MTC Contract No. BAIFA-200
Caltrans No. 2J330
Project ID 0414000490

INVITATION FOR BIDS

Contract Documents
NOTICE TO CONTRACTORS AND SPECIAL PROVISIONS

Express Lanes Backhaul Communications Network
Fiber Optic Cable and Network Electronics Furnishing, Installation, and Testing

Issued for Bid May 28, 2015

For use in Connection with Standard Specifications **Dated May 2010**, Standard Plans **Dated May 2010** of the California Department of Transportation

BAY AREA INFRASTRUCTURE FINANCING AUTHORITY
Joseph P. Bort MetroCenter
101 Eighth Street
Oakland, California 94607-4700

DocuSign Envelope ID: 894511EA-295B-49EB-A393-D26A6837FDD4

BAY AREA INFRASTRUCTURE FINANCING AUTHORITY Contract No. BAIFA-200

The Special Provisions contained herein have been prepared by or under the direction of the following Registered persons.

ROADWAY

REGISTERED CIVIL ENGINEER

REGISTERED PROFESSIONAL ENGINEER
KAI H. CHAN
No. 36241
Exp. 6-30-16
CIVIL
STATE OF CALIFORNIA

ELECTRICAL

REGISTERED ELECTRICAL ENGINEER

REGISTERED PROFESSIONAL ENGINEER
PATRICK A. RAMIREZ
No. 21176
Exp. 6-30-15
ELECTRICAL
STATE OF CALIFORNIA

DocuSign Envelope ID: 894511EA-295B-49EB-A393-D26A6837FDD4

TABLE OF CONTENTS

PART 1. INVITATION FOR BID 1
PART 2. Special Provisions 6
1. BAY AREA INFRASTRUCTURE FINANCING AUTHORITY (BAIFA) 7
2. General Description of Work 7
3. Description of the Contracting Process 8
4. Notice of Award 8
5. Certificates of Insurance 9
7. Return of Bid Security 10
8. Executed Contract 10
9. Notice to Proceed 10
PART 3. INSTRUCTIONS TO BIDDERS 12
1. Scope of Work 13
2. Minimum Qualifications 16
3. Pre-Bid Conference and Examination of Site and Existing Conditions 16
4. Examination of the Contract Documents 17
5. Addenda to Contract Documents 24
6. Prevailing Wage Rates 24
7. Preparation and Submittal of Bid 25
8. Bid Security 26
9. Opening of Bids 27
10. Withdrawal of Bid 27
11. Conditional Bids 27
12. Single Bid Response 27
13. Award or Rejection of Bids 27
14. Basis of Award 28
15. Protest Procedures 28
16. Public Records 29
PART 4. CONTRACT FORMS 30
CONSTRUCTION AGREEMENT 32
PERFORMANCE BOND FOR PUBLIC WORKS 35
PAYMENT BOND FOR PUBLIC WORKS 38
ALTERNATE TO FORM W-9 40
PART 5. BID FORMS 42
BID FORM 43

DocuSign Envelope ID: 894511EA-295B-49EB-A393-D26A6837FDD4

BID FORM 48
BIDDER'S BOND 54
DESIGNATION OF SUBCONTRACTORS IN COMPLIANCE WITH THE SUBLETTING AND SUBCONTRACTING FAIR PRACTICES ACT 56
Affidavit of Non-Collusion 57
Iran Contracting Act 58
Contractors Reference Form 60
Subcontractors Reference Form 62
Insurance Certificate Checklist 64
PART 6. SPECIAL CONDITIONS 68
SC-1 Indemnification 69
SC-2 Insurance 70
SC-3 Contract Bonds 73
SC-4 Time for Performance 74
SC-5 Beginning of Work, Time of Completion, and Liquidated Damages 74
SC-6 Contract Data Requirements 76
SC-7 Permits and Fees 79
SC-8 Reserved 80
SC-9 Reserved 80
SC-10 Reserved 80
SC-11 Reserved 80
SC-12 Reserved 80
SC-13 Worker's Safety Provisions 80
SC-14 Hazardous Materials 81
SC-15 Construction Water Conservation 82
SC-16 Reserved 82
SC-17 Reserved 82
SC-18 Reserved 82
SC-19 Final Pay Quantities 82
SC-20 Reserved 82
SC-21 Reserved 82
SC-22 Project Close-Out Requirements - Record Drawings/Network and System Administration Records 82
SC-23 Progress Schedule 83
SC-24 Reserved 91

DocuSign Envelope ID: 894511EA-295B-49EB-A393-D26A6837FDD4

SC-25 Reserved ... 91
SC-26 Laboratory ... 91
SC-27 Reserved ... 91
SC-28 Reserved ... 91
SC-29 Reserved ... 91
SC-30 Value Engineering Change Proposals (VECP) ... 91
SC-31 Alternative Methods of Construction ... 92
SC-32 Reserved ... 92
SC-33 Quality Assurance Program ... 93
SC-34 Conformity With Contract Documents and Allowable Deviations ... 95
SC-35 Use of Materials Found On the Work Site ... 95
SC-36 Reserved ... 95
SC-37 Reserved ... 95
SC-38 Reserved ... 95
SC-39 Reserved ... 95
SC-40 Reserved ... 95
SC-41 Reserved ... 95
SC-42 Public Convenience and Safety ... 95
SC-43 Reserved ... 96
SC-44 Clearing and Grubbing ... 96
SC-45 Reserved ... 97
SC-46 Preservation of Property ... 97
SC-47 Utilities ... 97
SC-48 Sanitary Facilities ... 97
SC-49 Reserved ... 97
SC-50 Reserved ... 98
SC-51 Technical Submittals List ... 98
PART 7. GENERAL CONDITIONS ... 101
GC-1 Applicable Law and Jurisdiction ... 102
GC-2 Compliance with Laws and Regulations ... 102
GC-3 Contractors' Licensing Requirements ... 102
GC-4 Independent Contractor ... 102
GC-5 Permits, Licenses, Fees and Notices ... 103
GC-6 Nondiscrimination ... 103
GC-7 Prohibited Interests ... 103

DocuSign Envelope ID: 894511EA-295B-49EB-A393-D26A6837FDD4

GC-8 Labor Provisions 104
GC-9 Hazardous Materials or Unusual Conditions 105
GC-10 Conflicts of Interest 106
GC-11 Reserved 107
GC-12 Archaeological/Historical Discoveries 107
GC-13 Confidential Information 107
GC-14 Patent Rights 110
GC-15 Intellectual Property, Copyright and Patent Infringement 110
GC-16 Rights in Technical Data 111
GC-17 Ownership of Work and Material 111
GC-18 Title and Risk of Loss 112
GC-19 Assignment and Delegation 112
GC-20 Subcontracts 112
GC-21 Waiver and Non-waiver 112
GC-22 Antitrust Claims 112
GC-23 Stop Notices 113
GC-24 Authorized Representatives 113
GC-25 Notices and Communications 114
GC-26 Pre-Construction Meeting 115
GC-27 Project Meetings 116
GC-28 Publicity Releases 116
GC-29 Reserved 116
GC-30 Reserved 116
GC-31 Reserved 116
GC-32 Reserved 116
GC-33 Reserved 116
GC-34 Reserved 116
GC-35 Temporary Construction Facilities and Utilities 116
GC-36 Character of Workers 116
GC-37 Working Environment 117
GC-38 Public Convenience and Safety 117
GC-39 Cooperation/Coordination and Work by Others 117
GC-40 Security 117
GC-41 Product Options, Supplier Approval and Substitutions 118
GC-42 Source of Materials 118

DocuSign Envelope ID: 894511EA-295B-49EB-A393-D26A6837FDD4

GC-43 Reserved ... 118
GC-44 Reserved ... 118
GC-45 Protection and Restoration of Property ... 118
GC-46 Utility Paint Markings ... 119
GC-47 Reserved ... 119
GC-48 Inspection ... 119
GC-49 Reserved ... 120
GC-50 Removal of Rejected or Unauthorized Work ... 120
GC-51 Disposal of Materials ... 120
GC-52 Protection of Completed Portions of Work ... 120
GC-53 Cleanup ... 120
GC-54 Redlined Construction Drawings ... 120
GC-55 Reserved ... 121
GC-56 Compensation ... 121
GC-57 Reserved ... 121
GC-58 Certified Payroll ... 121
GC-59 Invoicing and Progress Payments ... 121
GC-60 Force Account Payment ... 126
GC-61 Prompt Payment ... 131
GC-62 Final Payment ... 132
GC-63 Project Records ... 133
GC-64 Reserved ... 133
GC-65 Change Requests and Change Notices ... 133
GC-66 Change Orders ... 134
GC-67 Differing Site Conditions ... 135
GC-68 Claims ... 135
GC-69 Suspension of the Work ... 138
GC-70 Termination for Convenience or in the Public Interest ... 139
GC-71 Termination for Default ... 139
GC-72 Contractor's Duties upon Termination ... 140
GC-73 Warranty ... 141
GC-74 Warranty Work ... 141
GC-75 Warranty on Replaced Parts ... 141
GC-76 Systematic Failures ... 141
GC-77 Iran Contracting Act ... 142

DocuSign Envelope ID: 894511EA-295B-49EB-A393-D26A6837FDD4

GC-78 Project Management 142

PART 8. NOT USED 144
PART 9. NOT USED 145
PART 10. CONSTRUCTION DETAILS 146
DIVISION I GENERAL PROVISIONS 147
1 GENERAL 147
2 BIDDING 147
3 CONTRACT AWARD AND EXECUTION 147
5 CONTROL OF WORK 147
8 PROSECUTION AND PROGRESS 149
DIVISION II GENERAL CONSTRUCTION 152
12 TEMPORARY TRAFFIC CONTROL 153
DIVISION IX TRAFFIC CONTROL FACILITIES 172
86 ELECTRICAL SYSTEMS 172
86-9.01 FIBER-OPTIC CABLE, EQUIPMENT, AND SPLICING 181
86-10.01 Communications Hub Equipment 203
86-13.01 Communications Racks 211
86-14 LOGICAL NETWORK REQUIREMENTS 213
86-15 NETWORK MAINTENANCE REQUIREMENTS 249
86-16 COMMUNICATIONS TRANSMISSION SYSTEM 254
86-17 KEY STAFF QUALIFICATIONS 266
REVISED STANDARD SPECIFICATIONS APPLICABLE TO THE 2010 EDITION OF THE STANDARD SPECIFICATIONS 278

PART 11. OPERATIONS & MAINTENANCE PERFORMANCE REQUIREMENTS AND PENALTIES 271
APPENDIX A – CONTRACT DRAWINGS & PLANS 276
APPENDIX B – CALTRANS REVISED STANDARD SPECIFICATIONS 277
APPENDIX C – LOGICAL NETWORK DETAILS 616
APPENDIX D – WAGE DETERMINATIONS 617

DocuSign Envelope ID: 894511EA-295B-49EB-A393-D26A6837FDD4

PART 1. INVITATION FOR BID

DocuSign Envelope ID: 894511EA-295B-49EB-A393-D26A6837FDD4

LETTER OF INVITATION

For
Express Lanes Backhaul Communications Network

Dear Contractor:

The BAY AREA INFRASTRUCTURE FINANCING AUTHORITY (BAIFA) invites your firm to respond to this Invitation for Bids (IFB) for:

Express Lanes Backhaul Communications Network

This letter, together with Contract Forms, Special and General Conditions, Bid Forms, Construction Details, Project Plans, and Standard Specifications and Standard Plans of the California Department of Transportation (Caltrans), as revised, comprise the IFB for this project. Responses to the IFB are to be submitted in accordance with the instructions stated herein.

Bid Submission & Bid Opening

Interested Bidders must submit their bids in sealed envelopes no later than **4:00 p.m. on June 30, 2015**. Bids received after that date and time will not be considered. All bids must be completed and submitted on the enclosed Bid Forms, in Part 5 of this IFB, in order to be considered. Bid Opening is open to the public and will be held at the due date and time listed above at BAIFA offices located at Joseph P. Mort Metro Center, 101 Eighth St., Oakland, CA 94607, in the Fishbowl Conference Room.

BAIFA Point of Contact

A submitted bid will be considered a firm offer to provide the services described for a period of one hundred twenty (120) days from the date of bid opening.

Bids and all inquiries relating to this IFB will be submitted to the Contracts Administrator at the address shown below. E-mail inquiries may be directed to <MDinh@mtc.ca.gov >.

Michael Brinton, Contracts Specialist
BAY AREA INFRASTRUCTURE FINANCING AUTHORITY
Joseph P. Bort MetroCenter
101 Eighth Street, 3rd Floor Reception Desk
Oakland, CA 94607-4700
(510) 817-5864

Bid Guaranty

Bids must be accompanied by a bid guaranty in the form of a cashier's check, a certified check, or a bid bond executed by an admitted surety insurer ("A 7" Rating or better), in the amount of 10% of the bid amount, payable to BAIFA. Such check or bond will be given as a guaranty that Bidder will, within six (6) calendar days of being requested to do so by BAIFA, enter into a

DocuSign Envelope ID: 894511EA-295B-49EB-A393-D26A6837FDD4

Construction Agreement and provide the required Performance and Payment bonds. If a Bidder's bond is furnished, it must conform to the form provided with the bid documents herein.

If the Bidder to whom the work has been awarded refuses or fails to execute the Construction Agreement and/or provide the required bonds within the specified time, the check will be forfeited to BAIFA or the principal and surety on the bond will be liable to BAIFA for the principal amount thereof in accordance with its terms. Bidder guarantees will be held until the Construction Agreement has been finally executed, after which all Bidders' guarantees except any guarantees which have been forfeited, will be returned to the respective Bidders whose bids they accompany, but in no event will Bidder's securities be held by BAIFA beyond one hundred twenty (120) days from the time set for receiving bids.

References

You must provide **at least three (3) references** for prior work performed similar to the work described in this IFB. For required reference information, refer to **IFB Part 5, Bid Forms, Bid Form #7, Contractors Reference Form**.

Specifications and Schedule

The specifications and schedule for this project are described herein. The IFB also contains substantive requirements with which Bidders must fully comply in order to guarantee responsiveness.

The time of completion for all work (including both the civil construction and the logical implementation) will not be more than **156 working days for Segment I, and 268 working days for Segment II,** commencing on the **sixth (6) calendar day** following issuance of the Notice of Award for Segment I by BAIFA, and immediately following issuance of the Notice to Proceed for Segment II. An additional period of maintenance following construction and implementation, 18 months for Segment I, and 12 months for Segment II, with owner option to extend until completion of Segment II O&M, applies.

Bid Evaluation

Bids will be initially evaluated for responsiveness and adherence to the IFB. Quality and customer service are of the highest importance. In order to ensure superior service, references will be checked, and Bidders may be required to provide additional information verifying their experience.

A contract, if awarded, will be to the responsible Bidder submitting the lowest responsive bid, as indicated in the "Total Contract Price" space of **Bid Form #1, Schedule of Quantities and Prices**, for Segment I and Segment II.

Performance and Labor & Materials Payment Bonds

Prior to contract award, BAIFA will require both a Performance Bond and Labor & Materials Payment Bond, executed by an admitted surety insurer with Best Guide of A7 or better and issued by a surety acceptable to BAIFA. Each bond will be in a sum not less than 100% of the

DocuSign Envelope ID: 894511EA-295B-49EB-A393-D26A6837FDD4

Total Contract Price, as described in **Part 6**, **SC 3.1, Payment Bond** and **Part 6**, **SC 3.2, Performance Bond**, of this IFB. Upon acceptance of Segment I, the Performance Bond will be reduced by the sum of Bid Items 1 through 18 of the Segment I contract amount. Similarly, the bond will be further reduced by the sum of Bid Items 1 through 16 of the contract amount of Segment II, upon acceptance of Segment II, with the remaining amount to remain place through the remaining term of the O & M for both segments.

Bidder Selection Timetable*

Monday, June 8, 2015 9:00 a.m.	Mandatory Pre-Bid Conference
Wednesday, June 17, 2015 12:00 p.m.	Deadline for requests for clarification or exception
Monday, July 6, 2015 4:00 p.m.	**Closing date & time for receipt of bids & bid opening**
Wednesday, July 22, 2015**	BAIFA consideration of recommendation for award
Tuesday, July 28, 2015 (approx.)**	Issuance of Notice of Award

*All times are in PST (Pacific Standard Time).
** Award and approval dates are approximates and are subject to change before or after the closing date of the IFB.

General Conditions

BAIFA reserves the right to award a contract or to reject all bids.

A signed BAIFA Construction Agreement mailed or delivered to a particular Bidder will constitute a binding contract, which incorporates this IFB and its addenda, if any, and all documents referenced herein, any deviations from the specifications expressly accepted by BAIFA, and all terms and conditions of the Construction Agreement.

This is a public works project subject to the requirements of the California Labor Code.

A Bidder and all its subcontractors must be registered with the Department of Industrial Relations pursuant to Labor Code section 1725.5 with limited exceptions from this requirement for bid purposes only under Labor Code section 1771.1(a) in order to be considered or awarded a contract.

This project is subject to compliance monitoring and enforcement by the Department of Industrial Relations.

DocuSign Envelope ID: 894511EA-295B-49EB-A393-D26A6837FDD4

Authority to Commit BAIFA

The Executive Director of BAIFA, or designee, will recommend the successful Bidder to BAIFA, which will commit BAIFA to the expenditure of funds in connection with this IFB.

Thank you for your participation.

Sincerely,

DocuSigned by:
Steve Heminger
021DA2847D43405...

Steve Heminger
Executive Director

SH: SB

J:\CONTRACT\Procurements\Engineer&Architect\Express Lanes\Backhaul Network\Express Lanes Backhaul Network IFB_Final.docx

DocuSign Envelope ID: 894511EA-295B-49EB-A393-D26A6837FDD4

PART 2. Special Provisions

DocuSign Envelope ID: 894511EA-295B-49EB-A393-D26A6837FDD4

1. BAY AREA INFRASTRUCTURE FINANCING AUTHORITY (BAIFA)

BAIFA was created in 2006 as a Joint Powers Authority (JPA) between the Metropolitan Transportation Commission (MTC) and the Bay Area Toll Authority (BATA) to plan, develop, operate and finance transportation projects. In September 2011, the Joint Exercise of Powers Agreement creating BAIFA was amended to permit BAIFA to participate in developing and operating express lanes. In October 2011, the California Transportation Commission found 270 miles of express lanes eligible for development and operation by MTC under Section 149.7 of the Streets and Highways Code. In April 2013, MTC delegated its express lane responsibilities to BAIFA. A discussion of BAIFA's express lane responsibilities is available on MTC's website at: http://apps.mtc.ca.gov/meeting_packet_documents/agenda_2031/4_BAIFA_Resolution_4.pdf.

2. General Description of Work

BAIFA is implementing a Metropolitan Area Network (MAN), referred to herein as "the Backhaul Network", for use by BAIFA and other transportation entities located within the San Francisco Bay Area. The Backhaul Network, which will be comprised primarily of optical fiber, will leverage existing California Department of Transportation (Caltrans), Bay Area Rapid Transit (BART), City of San Jose, and BATA communications infrastructure where available. While the primary purpose of the Backhaul Network is to provide MAN communications services for the Express Lanes Network (ELN), consideration for use by the BATA bridge toll network and other MTC, BAIFA, and Caltrans Traffic Management Systems (TMS) projects is being considered.

The Backhaul Network interconnects with an ELN Roadside Network at predefined Hub locations along the Corridor. The ELN Roadside Network provides communications and network services to toll collection system in-lane devices at sites along the Corridor. The Roadside Network uses Backhaul trunk fiber optic cable to complete connections at roadside cabinets along the I-680, I-880, and I-80 Corridors, at the Benicia Bridge Toll Plaza (primary data center), the 375 Beale Street (secondary data center) and the Caltrans District 4 Traffic Management Center (D4 TMC).This provides high speed and redundant routing of ELN communications traffic to and from the ELN Roadside network, the host and operations data centers, and the D4 TMC for toll collection system application processing and communications. At the primary and secondary data center sites, Backhaul Network communications will need to support current and future data center needs, interfaces to external networks, and a communication path to and from the Roadside Network along the Corridors via fiber optic cable and leased MetroE communications, and to the BATA network or "BATAnet".

This contract will be broken into two segments. The first segment (Segment I) will include the installation of the Backhaul Network along the I-680 Corridor, the Beale Street data center, Benicia Toll Plaza Data Center, and Caltrans D4 TMC. The second segment (Segment II) will include the installation of the Backhaul Network along the I-880 Corridor and two sites located along the I-80 Corridor. Work on Segment II will begin following Segment I and is conditional and strictly contingent upon BAIFA securing the required permits and issuance of Segment II NTP within 12 months from NOA. The time period for issuance of the Segment II NTP may be extended as agreed in writing between BAIFA and the Bidder. The selected contractor is cautioned

DocuSign Envelope ID: 894511EA-295B-49EB-A393-D26A6837FDD4

not to expend resources or perform any work related to Segment II until receipt of Segment II NTP.

Both segments of work will include the installation of fiber optic cable, pull boxes, fiber optic splice pull boxes and enclosures and conduit for communications and electrical service, communications cabinets with equipment racks, communications facilities and racks, electrical service cabinets, termination of electrical service, and any ancillary equipment or materials for each Backhaul Hub communications site. The selected Contractor will be responsible for the logical network which includes the installation, configuration, implementation, integration and testing of the Backhaul hardware electronics as well as the network management software.

Segment I and Segment II, if completed, will be operated and maintained as one comprehensive network by the Contractor in partnership with BAIFA for a term not to exceed 12 months after acceptance of Segment II civil construction, or 18 months after acceptance of Segment I if BAIFA does not proceed with the Segment II project.

If a Contract is awarded, contract prices for equipment and/or service for Segment II will remain firm for 365 days following Notice of Award. If after 335 days, a Notice To Proceed has not been issued by BAIFA for work on Segment II, contractors may request a one-time price adjustment, in writing, due thirty (30) days prior to the 365th day following Notice of Award. The adjustment will be effective thirty (30) days after BAIFA receives the written request.

Price adjustments can only be requested for bid prices for Segment II. Costs may be escalated using the most recent bimonthly Consumer Price Index (CPI) for San Francisco-Oakland-San Jose Consolidated Metropolitan Statistical Area as published by the California Department of Finance starting July 1, 2015. The one-time escalation of costs will be no more than 3%, regardless of CPI.

3. Description of the Contracting Process

The procedure that will be followed during the period between BAIFA's determination of the successful Bidder and its issuance of an NTP consists of the steps listed and explained below:

1. Issuance of Notice of Award (NOA)
2. Signing of Construction Agreement by successful Bidder
3. Submittals of Performance Bond, Payment Bond and Insurance Certificate(s)
4. Execution of Construction Agreement by BAIFA
5. Issuance of Notice to Proceed

4. Notice of Award

After Bids are opened at the time and place stipulated in **Part 1,** Bids will be reviewed by BAIFA. The Contract will be awarded to the lowest responsive and responsible Bidder subject to the approval of BAIFA. BAIFA reserves the right to award a Contract or to reject any or all Bids. No Bidder may withdraw its Bid for the period of days stipulated in **Part 3, Instructions to**

DocuSign Envelope ID: 894511EA-295B-49EB-A393-D26A6837FDD4

Bidders, Section 11, Withdrawal of Bid, after the date set for the bid opening. The Bid will be subject to acceptance by BAIFA during this period.

Promptly upon BAIFA's approval of the award of the Contract, BAIFA will issue a Notice of Award letter to the successful Bidder. Included with the NOA will be two originals of the Construction Agreement and one original of each of the following:

1. **Performance Bond** in the amount of 100% of the Total Contract Amount, Segment I and Segment II, to guarantee faithful performance of the work under the Contract, including the replacing of or making acceptable, any defective materials or faulty workmanship. Upon acceptance of Segment I, the Performance Bond will be reduced by the sum of Bid Items 1 through 18 of the Segment I Contract amount. Similarly, the bond will be further reduced by the sum of Bid Items 1 through 16 of the Contract amount of Segment II, upon acceptance of Segment II.

2. **Payment Bond** in the amount of 100% of the Total Contract Amount, Segment I and Segment II, to inure to the benefit of persons performing labor or furnishing materials in connection with the work of the proposed Contract. This bond will be maintained in full force and effect until all work under the Contract is completed and accepted by BAIFA, and until all claims for materials and labor have been paid.

Within **six (6) calendar days** from the date of NOA, the successful Bidder will return executed copies of these documents. Within this same period, you will furnish Certificates of Insurance as more fully described below.

Both the Performance Bond and the Payment Bond will be issued by a surety company(ies) acceptable to BAIFA with a Best's Guide Rating of A-VII (global) or better and authorized to execute such in the State of California.

Should any surety or sureties be deemed unsatisfactory at any time by BAIFA, notice will be given to you to that effect, and you must forthwith substitute a new surety or sureties satisfactory to BAIFA, at your expense.

All alterations, time extensions, extra work, additional work or any other changes authorized in the Construction Agreement, may be made without notice to, or securing the prior consent of, the surety or sureties on the Performance or Payment Bonds.

5. Certificates of Insurance

The successful bidder must furnish original certificates, within six (6) calendar days from NOA, showing evidence that the insurance coverages specified in the Special Conditions herein have been obtained and are in force. All certificates must provide that not less than sixty (60) calendar days written notice will be given to BAIFA and any additional insureds in the event of cancellation, non-renewal or material change in the policy.

DocuSign Envelope ID: 894511EA-295B-49EB-A393-D26A6837FDD4

6. Forfeiture of Bid Security

Failure of the Bidder to whom the Notice of Award was issued to sign the Construction Agreement and submit all of the documents required within six (6) calendar days from NOA will be just cause for the annulment of the award and forfeiture of Bidder's security.

7. Return of Bid Security

If the Bid is not accepted by BAIFA within one hundred twenty (120) days after the date set for bid opening, or if the Bidder to whom the Contract is awarded executes and delivers to BAIFA the required documents, then the Bidder's Bond, cash, or the amount of the certified or cashier's check will be returned to all Bidders.

8. Executed Contract

After the delivery of two (2) signed original Construction Agreements and all required submissions as stipulated above, BAIFA will sign the Construction Agreement. No agreement between BAIFA and a Bidder is in effect until BAIFA executes the Construction Agreement.

9. Notice to Proceed

BAIFA intends to issue a NTP immediately following receipt of executed copies of the contract documents in **Part 4** and insurance certificates. The Contractor should not enter upon nor occupy Owner Property or commence any materials fabrication prior to receiving the Notice to Proceed. Any work performed or expenses incurred by the selected Contractor prior to receipt of Notice to Proceed are entirely at Contractor's risk. Contractor will commence performance of the applicable segment of work after receipt of the Notice to Proceed, and will continuously and diligently prosecute the work to completion on or before the time or times set forth in **Part 6, Special Conditions.**

Segment I:

BAIFA will issue an NTP 1, for Segment I of this Contract, promptly following execution of the Construction Agreement and receipt of performance and payment bonds and all Certificates of Insurance. Please see SC-5 for NTP schedule as multiple NTPs will be issued for work performed for each Segment.

Segment II:

An NTP for Segment II of this Contract will be issued separately and at the discretion of BAIFA. BAIFA's ability to issue the Segment II Notice to Proceed is contingent upon BAIFA securing the required permits for Segment II from Caltrans and affected agencies. BAIFA's expectation is that the required Segment II permits will be issued in the fourth quarter calendar year 2015. See **Part 3, Instructions to Bidders, Section 13, Award or Rejection of Bids**, last paragraph.

DocuSign Envelope ID: 894511EA-295B-49EB-A393-D26A6837FDD4

DocuSign Envelope ID: 894511EA-295B-49EB-A393-D26A6837FDD4

PART 3. INSTRUCTIONS TO BIDDERS

DocuSign Envelope ID: 894511EA-295B-49EB-A393-D26A6837FDD4

1. Scope of Work

This section specifies the Work required for the design, delivery and installation of equipment, and for the modification of existing equipment and facilities to provide a fully functional Backhaul Network, as specified herein, in **Part 10, Construction Details**, of the Standard Specifications, and as shown in the I-680, I-80 and I-880 design plans. Contractor will be responsible for the physical installation and construction of the Backhaul Network, implementation and testing of the logical network, and network management.

Civil Construction and Network Hardware Installation

Contractor will be responsible for the installation of pull boxes, fiber optic splice pull boxes, splice enclosures, and conduit for communications and electrical service. Contractor will furnish and install electrical service cabinets, located within the vicinity of roadside Hub cabinets, including new electrical service conduit and conductors from the proposed electrical service cabinet to an existing PG&E service point, as identified in the design plans. Contractor will install Hub cabinets which house proposed communications network devices for transmitting data between the express lanes roadside equipment and the data center equipment. All networking equipment to be installed at data centers will utilize BAIFA furnished infrastructure, racks, and/or cabinets. All Hub cabinets, service enclosures, foundations, conduit, and pull boxes will be installed per Caltrans Standard Specifications. See **Part 10, Construction Details.**

To accommodate the installation of future tolling infrastructure, existing communications conduit will be relocated at various locations throughout the project limits. In addition, the existing conduit system contains gaps and requires the installation of new communications conduit infrastructure. It is the responsibility of the Contractor to positively identify all high risk utilities prior to construction. Utility relocations will not be required under this scope of work and are shown in the design plans for information only. Contractor will fulfill requirements set forth in the design drawings and specifications to utilize best management practices for erosion control and water pollution control activities during construction.

Contractor will furnish, install, splice, terminate and test new single mode fiber optic cables at the following locations and as shown in the I-680, I-80 and I-880 design plans:

- In existing conduit and proposed conduit along the I-680 Corridor from Benicia Bridge Toll Plaza to the I-680/I-580 Interchange.
- In existing conduit and proposed conduit along the I-880 Corridor from I-880/Calaveras Blvd Interchange to a point 0.75 miles north of the I-880/Hegenberger Road Interchange.

Contractor will splice and/or patch into existing trunk fiber optic cable installed by others at the following locations:

- At and between each Backhaul Hub adjacent to a BART Station or facility and corresponding BART Station Train Control Room
- Between the Fremont BART Station and the AutoMall Hub

DocuSign Envelope ID: 894511EA-295B-49EB-A393-D26A6837FDD4

- Between Silicon Valley ITS Traffic Operation Facility and the Calaveras Hub
- At and between each Backhaul BART Station Hub or facility and corresponding BART Train Control Room
- At and between the 19th Street BART station and the Caltrans District 4 TMC facility
- At and between the BAIFA Oakland Hub and BART facility (located at 4th Street and Clay Street within the City of Oakland and BART Right-of-way)

Contractor will furnish, configure, and test all required network devices, software, firmware, software licenses, cables, splicing, termination and all incidental components proposed within Hub cabinets, the TMC facility, and/or data centers. Additionally, Contractor will furnish, configure and test all required Network Management System (NMS) hardware and software at the 375 Beale Street Data Center. See **Part 10, Construction Details,** for network devices, software, and ancillary components to be furnished, configured, and tested at the following locations:

<u>I-680 Corridor</u>

- I-580/I-680 Interchange (Dublin Hub)
- I-680/State Route 24 interchange (Walnut Creek Hub)
- BAIFA Oakland Hub (BOH) (adjacent to the BART facility)
- Caltrans District 4 TMC
- Walnut Creek BART Station (Contractor to utilize Caltrans furnished racks and power infrastructure)
- 19th Street BART Station

<u>I-880 Corridor</u>

- Hegenberger Hub
- Fremont BART Station and City Traffic Operations Center Cross Connection
- AutoMall Hub
- Calaveras Hub

<u>I-80 Corridor</u>

- I-80 West Hub
- I-80 East Hub

<u>Data Centers</u> (Contractor to utilize BAIFA furnished racks and power infrastructure)

- 375 Beale Street
- Benicia Bridge Toll Plaza

Logical Network

The logical network activities identified in this summary of work will include configuration, implementation, integration and testing of Backhaul hardware electronics hardware, network architecture, and network management software. Contractor will adhere to specifications

DocuSign Envelope ID: 894511EA-295B-49EB-A393-D26A6837FDD4

set forth in **Part 10, Construction Details**, and prepare the documentation, for BAIFA approval, prior to commencement of work, as set forth in SC-51.

As built drawings and configuration details for the installed network must be provided for inspection and approval prior to acceptance of Work. As-built drawings must be drawn using Microsoft Office, Microsoft Visio, and/or Bentley Microstation. Contractor will also be responsible for preparing operations and maintenance (O&M) manuals, which will contain documentation of items listed in **Part 10, Construction Details**.

Network Management

Contractor will furnish and install an NMS to monitor alarm and remotely configure all communications devices that connect to the Communications System as well as provide global and device specific configuration and protocol management, troubleshooting and root-cause analysis, security, system performance, and health monitoring for the Backhaul communications network. The NMS will be chosen and installed in accordance with specifications in **Part 10, Construction Details**, and includes the following:

- Network Software and Configuration Management
- Auditing
- Discovery and Monitoring
- Change Management
- Security Management
- Performance Management
- Fault Management
- Reporting

Contractor will be required to provide on-site and Backhaul specific training to select BAIFA personnel, prior to the final system acceptance, to include training on selected vendor hardware and software furnished by the Contractor. See **Part 10, Construction Details**, for all training requirements to be fulfilled as part of this Contract.

Operations & Maintenance

The Contractor will provide operations and maintenance of the Backhaul network of each Segment, for a minimum of 12 months following acceptance of civil construction and network hardware, logical, and network management installations, to ensure a highly available and responsive Backhaul network. The Operations and Maintenance work will be completed in accordance with the specifications in **Part 10, Construction Details** and **Part 11, Operations and Maintenance Performance Requirements and Penalties**, and will include all materials, hardware and software, which will be furnished by the Contractor.

DocuSign Envelope ID: 894511EA-295B-49EB-A393-D26A6837FDD4

2. Minimum Qualifications

To be considered for this project, Bidders must demonstrate that they meet the minimum qualifications described below. Information demonstrating compliance must be provided on Bid Form #2 in **Part 5, Bid Forms**.

Minimums which must be met by Bidder's direct firm experience:

- The Bidder serving as the prime contractor will have successfully deployed or operated and maintained two or more fiber optic Metropolitan Area Networks (MAN) consisting of at least three (3) field communication hubs in the past five (5) years. For purposes of these minimum qualifications, MAN includes layer 2 and layer 3 network hardware installed in field cabinets and including software, protocols, network management and security configurations.

Minimums which may be met by Bidder's direct firm experience or the experience of a subcontractor for which the prime contractor is responsible:

- The Bidder will have provided a minimum of two (2) years of maintenance and network administration services for MAN equipment and provided network management and security management support for at least one (1) MAN in a highly available environment in the past five (5) years.
- The Bidder will have provided operations and maintenance based on the service level requirements in Part 10, Construction Details on three (3) projects within the last three (3) years.
- The Bidder will have a minimum of five (5) years of experience in the installation of fiber optic cables, including fusion splicing, and the terminating and testing of single mode fiber optic cables. The Bidder will demonstrate that they have successfully performed and tested at least 2,000 fusion splices within the last five years. Required experience includes installation of fiber optic connectors, inspection of fiber optic strands via optical time-domain reflectometer (OTDR) devices, and completion of end-to-end attenuation tests using power meter/light source equipment.

3. Pre-Bid Conference and Examination of Site and Existing Conditions

A mandatory pre-bid conference will be held at the time and place set out in **Part 1, Invitation for Bid.** The purpose of this meeting is to inform prospective Bidders and potential subcontractors of subcontracting and material supply opportunities and to receive comments and questions regarding the work and the Contract Documents from attendees.

DocuSign Envelope ID: 894511EA-295B-49EB-A393-D26A6837FDD4

Any unique information offered or arising during the individual site visits will be compiled and posted to the MTC website in a Q & A format after the deadline for requests for clarification or exception has passed but at least five (5) calendar days prior to the deadline for written protest of items in the Contract Documents defined in **Part 3, Instructions to Bidders, Article 15, Item 15.2, Protest of Specifications**. All potential Bidders are responsible for checking the BAIFA website for any new information.

Prospective Bidders must examine the job site and bid documents. Bid submission is your acknowledgement that you have examined the job site and bid documents and are satisfied with:

1. General and local conditions to be encountered;
2. Character, quality, and scope of work to be performed;
3. Quantities of materials to be furnished;
4. Character, quality, and quantity of surface and subsurface materials or obstacles; and
5. Requirements of the Contract.

4. Examination of the Contract Documents

Each prospective Bidder will carefully examine the Contract Documents and become thoroughly familiar with the terms and conditions contained therein prior to the bid opening date. The bid submitted will include a sum to cover the cost of all items necessary to perform the work as set forth in the Contract Documents. No allowance of any kind will be made to you because of lack of such examination or knowledge. The submittal of a bid will be conclusive evidence that you have made such an examination.

4.1 Definitions

Whenever in the Contract Documents the following terms are used, unless the context otherwise requires, the intent and meaning will be interpreted as follows:

Acceptance: The formal written acceptance by BAIFA of an entire contract that has been completed in all respects in accordance with the plans and specifications and any modifications thereof previously approved.

Acts of God: "Acts of God" as defined in Public Contract Code § 7105.

Backhaul Network: The regional distribution network that shall provide a communications path to a variety of BAIFA, BATA and MTC projects and the existing BATA network using a Metropolitan Area Network, Local Area Network, fiber optic cables and/or leased line infrastructure.

BAIFA: Bay Area Infrastructure Financing Authority

BATA: The Bay Area Toll Authority

DocuSign Envelope ID: 894511EA-295B-49EB-A393-D26A6837FDD4

BATAnet: The existing information systems, communications and network services owned and administered by BATA.

Bidder: Any individual, firm, partnership, corporation, or combination thereof, submitting a bid for the work contemplated, acting directly or through a duly authorized representative.

Calendar Days: A calendar day is any day including all legal holidays, Saturday and Sunday.

Caltrans: California Department of Transportation

Civil Contractor: The person or persons, firm, partnership, corporation, or combination thereof, private or municipal, who have entered into a Contract with the BAIFA for the construction of the Express Lanes infrastructure on I680 or I880.

Conduit: A pipe or tube in which smaller pipes, tubes or electrical conductors are inserted or are to be inserted.

Contract: The written agreement covering the performance of the work and the furnishing of labor, materials, tools and equipment in the construction of the work. The Contract will incorporate this IFB, and its addenda, if any, all documents referenced herein, any deviations from the specifications expressed and accepted by BAIFA, and includes, the notice to Contractors, proposal, plans, special conditions, general conditions, applicable Caltrans Standard plans and Specifications including revisions and updates, and contract bonds; also any and all supplemental agreements amending or extending the work contemplated and which may be required to complete the work in a substantial and acceptable manner. Supplemental Agreements are written agreements covering alterations, amendments, or extensions to the Contract and include Contract change orders.

Contract Documents: The Contracts Documents consist of the documents referenced above under the "Contract" definition.

Contractor: The person or persons, firm, partnership, corporation, or combination thereof, private or municipal, who have entered into a Contract with the BAIFA. Used interchangeably with "You" and "you".

Corridor: A continuous stretch of the express lane roadway operated by the same operator and containing predefined start and end points.

Day: 24 consecutive hours running from midnight to midnight; calendar day.

1. **Business day**: Day on the calendar except Saturday, Sunday or Legal Holidays.
2. **Working day**: Time measure unit for work progress. A working day is any day except:
   - Saturday, Sunday and Legal Holidays
   - Day when you cannot perform work on the controlling activity for at least 50 percent of the day with at least 50 percent of the normal labor and equipment due to any of the following:

DocuSign Envelope ID: 894511EA-295B-49EB-A393-D26A6837FDD4

- Adverse weather-related conditions that cause the Contractor to dismiss the crew.
- Maintaining traffic under the Construction Agreement.
- Engineer's direction to suspend the controlling activities for reasons unrelated to the Contractor's performance.
- Unanticipated event not caused by either party such as:
  - Acts of God
  - Acts of a public enemy
  - Epidemic
  - Fire
  - Flood
  - Governor-declared state of emergency
  - Landslide
  - Quarantine restriction
- Issue involving a third party, including:
  - Industry or area-wide labor strike
  - Material shortage
  - Freight embargo
  - Jurisdictional requirement of a law enforcement agency
  - Workforce labor dispute of a utility or non-highway facility owner resulting in a non-highway facility rearrangement not described and not solely for the Contractor's convenience. Rearrangement of a non-highway facility includes installation, relocation, alteration, or removal of the facility.

Department: BAIFA, unless with respect to the Standard Plans and Standard Specifications the context requires that Department mean Caltrans.

Departments or Officers: Wherever departments or officers are referred to herein, Department staff are meant for the purpose of these Contract Documents, unless with respect to the Standard Plans and Standard Specifications the context requires that Department means BAIFA.

Director or Director of Transportation: BAIFA Executive Director or his designee.

Engineer: Authorized representative for BAIFA, also, identified as the Resident Engineer.

Federal Agencies: Whenever, in the specifications, reference is made to any Federal agency or officer, the reference will be deemed made to any agency or officer succeeding in accordance with law to the powers, duties, jurisdiction and authority of the agency or officer mentioned.

Frontage Road: A local street or road auxiliary to and located generally on the side of an arterial highway for service to abutting property and adjacent areas and for control of access.

DocuSign Envelope ID: 894511EA-295B-49EB-A393-D26A6837FDD4

Hub: Locations that provide and concentrate network connections along the corridor, at facilities or in Data Centers.

Laboratory: The established Laboratory authorized by the Engineer to test materials and work involved in the Contract.

Legal Holidays: Those days shown in the following table:

Holidays	
Holiday	**Date Observed**
New Year's Day	January 1st
Birthday of Martin Luther King, Jr.	3rd Monday in January
Lincoln's Birthday	February 12th
Washington's Birthday	3rd Monday in February
Cesar Chavez Day	March 31st
Memorial Day	Last Monday in May
Independence Day	July 4th
Labor Day	1st Monday in September
Columbus Day	2nd Monday in October
Veteran's Day	November 11th
Thanksgiving Day	4th Thursday in November
Day after Thanksgiving Day	Day after Thanksgiving Day
Christmas Day	December 25th

If January 1st, February 12th, March 31st, July 4th, November 11th, or December 25th falls on a Sunday, the Monday following is a holiday. If November 11th falls on a Saturday, the preceding Friday is a holiday.

Liquidated Damages: The amount prescribed in the contract documents, to be paid to BAIFA or to be deducted from any payments due or to become due the Contractor for each day's delay in completing the whole or any specified portion of the work beyond the time allowed in the contract documents.

Manual of Traffic Controls: The Caltrans Department of Transportation publication entitled "MANUAL OF TRAFFIC CONTROLS for Construction and Maintenance Work Zones." This manual may be obtained from Caltrans Publications.

MTC: Metropolitan Transportation Commission

MTC SAFE: Metropolitan Transportation Commission Service Authority for Freeways and Expressways.

Notice of Award (NOA): Written notification issued by BAIFA awarding the Contract.

Notice To Proceed (NTP): Notification to the Contractor to commence construction.

DocuSign Envelope ID: 894511EA-295B-49EB-A393-D26A6837FDD4

Oversight Engineer: The assigned representative of the California Department of Transportation that is duly authorized to oversee work covered by these specifications. The Oversight Engineer will have authority to stop work at any time there is a risk to public safety or when the work appears to be performed in an unsafe manner.

Owner: BAIFA or, if the context so dictates, the California Department of Transportation.

Owner Furnished Materials: Materials furnished by BAIFA, BATA, State, Caltrans, BART, or Silicon Valley ITS.

Owner Property: Materials furnished by BAIFA, BATA, State, Caltrans, BART, or Silicon Valley ITS.

Processing: Any operation or operations of whatever nature and extent required to produce a specified material.

Roadside Network: The network system installed and maintained by the TSI which provides communications and network services to Toll Collection System sites along the Corridor. It touches the in-lane toll collection system devices for local device communications and the Backhaul Network.

Resident Engineer: Authorized representative for BAIFA, also, identified as the Engineer.

Resident Inspector: Resident Engineer or his authorized representative.

Segment I: Construction of the Backhaul network along the I-680 Corridor from the Benicia Bridge Toll Plaza to the I-680/I-580 Interchange, and locations specified in **Part 3**, Scope of Work, "I-680 Corridor".

Segment II: Construction of the Backhaul network along the I-880 Corridor from I-880/Calaveras Blvd Interchange to a point 0.75 miles north of the I-880/Hegenberger Road Interchange.

Specifications: The directions, provisions and requirements contained in these Contract documents.

Stakeholder Agencies: MTC, BATA, Caltrans, BART, City of Fremont, City of Milpitas, City of San Jose, City of Walnut Creek, City of Dublin, City of Oakland, and the California Highway Patrol.

Standard Plans: The Standard Plans of Caltrans.

Standard Specifications: The Standard Specifications and Revisions to the Standard Specifications of Caltrans.

DocuSign Envelope ID: 894511EA-295B-49EB-A393-D26A6837FDD4

State: State of California**,** unless with respect to the Standard Plans and Standard Specifications the context requires that State mean BAIFA.

State Contract Act: The applicable portions of the Public Contract Code. The provisions of this act and other applicable laws form and constitute a part of the provisions of this Contract to the same extent as if set forth herein in full.

Substantial Completion: Beneficial occupancy of the project and issuance of the notice of relief of maintenance both statements issued from the Resident Engineer.

Supplemental Agreements: Written agreements covering alterations, amendments or extensions to the Contract and include Contract change orders.

Total Contract Price: Price for Segment I, including O&M, plus Segment II, including O&M.

Work or work: Resources and activities required for Contract acceptance, including labor, materials, equipment, and the created product.

Working Day: See Day definition.

You: See Contractor definition.

4.2 Abbreviations

In addition to the Section 1-1.06, Abbreviations, of the Standard Specifications, each abbreviation signifies the following:

Abbreviation	Term
APHA	American Public Health Association
API	American Petroleum Institute
AREMA	American Railway Engineering and Maintenance-of-Way Association
ASTM	American Society for Testing and Materials
BAIFA	Bay Area Infrastructure Financing Authority
BATA	Bay Area Toll Authority
BOH	BAIFA Oakland Hub
Caltrans	California Department of Transportation
CPI	Consumer Price Index

DocuSign Envelope ID: 894511EA-295B-49EB-A393-D26A6837FDD4

ECN	External Communications Network
ELN	Express Lane Network
FIDR	Final Implementation Design Review
GBIC	Gigabit Interface Converter
IPP	Injury Prevention Program
ITS	Intelligent Transportation System
MAN	Metropolitan Area Network
MTC	Metropolitan Transportation Commission
MTC SAFE	Metropolitan Transportation Commission Service Authority for Freeways and Expressways
NECA	Standards for Construction
NESC	National Electrical Safety Code
NMS	Network Management System
NOC	Network Operations Center
O&M	Operations and Maintenance
PIDR	Preliminary Implementation Design Review
PMBOK	Project Management Body of Knowledge
PMP	Project Management Plan
TCE	Temporary Construction Easement
TMC	Traffic Management Center
TMS	Traffic Management System
TSI	Toll System Integrator
VLAN	Virtual Local Area Network

4.3 Units of Measurement

Some of the symbols for units of measurement used in the specifications and in the Summary of Quantities and Prices are defined as follows, in addition to Section 1-106, Abbreviations, of the Standard Specifications. The symbols for other units of measurement used

DocuSign Envelope ID: 894511EA-295B-49EB-A393-D26A6837FDD4

in the specifications are as defined in ASTM Designation: E-380, or in the various specifications and test referenced in the specifications.

Symbols as used in the Specifications	Definitions
A	amperes
g	gram
ksi	kips per square inch
h	hour
Ω	ohm
pcf	pounds per cubic foot
s	second
ton	2,000 pounds
W	watt
V	volt

5. Addenda to Contract Documents

BAIFA reserves the right to make changes in the Contract Documents as it may deem appropriate up to the time set for opening of bids. Any and all changes in the Contract Documents will be made by written Addendum to this IFB, which will be issued by BAIFA at http://www.procurements.mtc.ca.gov. All potential Bidders are responsible for checking the BAIFA website for any Addenda.

If such Addenda require changes in quantities or might affect the prices bid, or both, the date set for opening of bids may be postponed by such number of days as in the opinion of BAIFA will enable Bidders to revise their bids.

Failure to acknowledge receipt of all Addenda may cause the bid to be considered non-responsive to the Contract Documents. You certify that the Contract Documents and Addenda thereto have been thoroughly read and that there are no misunderstandings as to the meaning, purpose or intent of any provision in the Contract Documents as modified by those Addenda.

6. Prevailing Wage Rates

You and all your subcontractors will comply with applicable sections of the California Labor Code and regulations promulgated thereunder (including without limitation, Sections 1720 *et seq*. and Title 8 of the California Code of Regulations Sections 16000 *et seq*.) governing the payment of prevailing wages, as determined by the Director of the California Department of Industrial Relations, in regards to all work performed under this Contract. In particular, your attention is drawn to Labor Code Sections 1771 (payment of prevailing wage rate), 1775 (penalty for non-payment), 1776 (payroll records), and 1777.5 (use of apprentices). Appendix D, Wage Determinations, is attached hereto and incorporated herein by this reference.

DocuSign Envelope ID: 894511EA-295B-49EB-A393-D26A6837FDD4

You and all your subcontractors, to the extent the work of such subconsultants under this Contract is subject to California Labor Code Section 1720 *et seq*., will be registered with the Department of Industrial Relations pursuant to Labor Code section 1725.5 and will furnish electronic certified payroll records directly to the Labor Commissioner through the internet portal of the Division of Labor Standards Enforcement.

BAIFA reserves the right to require you and all your subcontractors to furnish electronic certified payroll records directly to BAIFA in addition to the reporting requirement stated above.

7. Preparation and Submittal of Bid

Prepare your bid in strict accordance with all of the requirements of the Contract Documents and any addenda thereto. In order to receive consideration, all bids must comply with the following instructions:

7.1

Bids will be submitted on the forms provided in these Contract Documents in signed original. Bids submitted in any other form may be considered non-responsive and rejected.

7.2

Blank spaces in each bid form will be properly filled in, and the phraseology thereof will not be changed. Any conditions or limitations made to the items mentioned therein may be cause for rejection. Bids may be rejected if they show any alterations of forms, additions not called for, conditional bids, incomplete bids, erasures, or irregularities of any kind. If bid amount is changed after the amount is originally inserted, the change must be initialed.

7.3

No telegraphic or fax bid or telegraphic or fax modification of a bid will be considered. No bids received after the time fixed for receiving them will be considered. Late bids will be returned to the Bidder unopened.

7.4

All bids must be enclosed in a sealed envelope bearing the Contract Number, the title of the project, the date and hour of the opening, and the name of the Bidder. Bids will be addressed to Michael Brinton, Contracts Specialist, Bay Area Infrastructure Financing Authority, and will be delivered to the BAIFA Office at Joseph P. Bort MetroCenter, 101 Eighth Street, Oakland, CA 94607-4700 no later than the time scheduled for bid opening. It is the sole responsibility of the Bidder to see that its bid is received in a timely manner.

7.5

Bids must include full compensation for furnishing all labor, material, tools, and equipment and doing all the work complete in place in accordance with the requirements of the Contract. Bid

DocuSign Envelope ID: 894511EA-295B-49EB-A393-D26A6837FDD4

prices must include all applicable surcharges and fees such as taxes, insurance and fringe benefits, indirect costs, overhead (field and office), profit, subcontractors' costs, travel, freight charges and other applicable surcharges and fees of any kind.

7.6

The quantities given in the Schedule of Quantities and Prices of the Contract bid form for which unit prices are asked to be bid are approximate only, being given as a basis for the comparison of bids, and BAIFA does not, expressly or by implication, represent that the actual quantities required will correspond therewith, but reserves the right to increase or decrease the quantity of any class or portion of the work, or to omit portions of the work, as BAIFA may deem necessary or advisable.

7.7

You must show the Contract number and title on your bid and on all correspondence:

Contract No.: BAIFA-200
Contract Title: Express Lanes Backhaul Communication Network

7.8

Wherever in the Bid an amount is stated in both words and figures, in case of discrepancy between words and figures the words will prevail. If all or any portion of the Bid is required to be given in unit prices and totals and a discrepancy exists between any such unit prices and totals so given, the unit prices will prevail. If the Bid contains an arithmetic error in the computation of unit price extensions or in the summation of Bid item totals, BAIFA will correct and revise the Total Contract Bid for Comparison accordingly. BAIFA will not make any changes on the total shown for "lump sum" items.

7.9

The successful Bidder will sign and file with BAIFA the following certification, Minimum Insurance Requirements, prior to performing the work of the Contract: *"I am aware of the provisions of Section 3700 of the Labor Code which require every employer to be insured against liability for workers' compensation or to undertake self-insurance in accordance with the provisions of that code, and I will comply with such provisions before commencing the performance of the work of this contract."*

8. Bid Security

Each bid will be accompanied by a certified or cashier's check, cash, or a Bidder's bond in the sum of not less than 10% of the Total Contract Price and said checks or bond will be made payable to the order of the Bay Area Infrastructure Financing Authority. In case the successful Bidder fails to file satisfactory bonds or provide the insurance required by the Contract Documents, or refuses to enter into a Contract within the specified time, it will forfeit its bid security. If the bid

DocuSign Envelope ID: 894511EA-295B-49EB-A393-D26A6837FDD4

is not accepted by BAIFA within one hundred twenty (120) calendar days after the date set for the opening of bids, or if the Bidder to whom the Contract is awarded executes and delivers to BAIFA the required Contract Forms, then the amount of the cash or the certified or cashier's check will be returned to the Bidder.

9. Opening of Bids

Bids will be opened and publicly read aloud by BAIFA at the time and place stated in **Part 1, Invitation to Bid**. Bidders are invited (but not required) to be present.

10. Withdrawal of Bid

Any Bidder may withdraw its bid, either personally or by a written request by a duly authorized representative, at any time prior to the scheduled time for opening of bids. However, no Bidder may withdraw its bid for a period of **one hundred twenty (120) calendar days** after the bid opening. Bidder's attention is directed to the provisions of the Public Contract Code Sections 5100 to 5107 regarding relief of Bidders.

11. Conditional Bids

Conditional bids, or those which take exception to the Contract Documents, will be considered non-responsive and will be rejected.

12. Single Bid Response

If only one bid is received in response to the Invitation For Bid, a detailed cost proposal may be required of the single Bidder. A cost/price analysis and evaluation and/or audit will be performed of the cost proposal in order to determine if the price is fair and reasonable.

13. Award or Rejection of Bids

The award of the Contract to the successful Bidder will be made within **one hundred twenty (120) calendar days** after the opening of bids. If the first Bidder selected as a successful Bidder refuses or fails to execute the Contract, BAIFA may award the Contract to the second successful Bidder selected as provided herein and such an award, if made, will be made within **one hundred twenty (120) calendar days** after the opening of the bid proposals. If the second successful Bidder refuses or fails to execute the Contract, BAIFA may award the Contract to the third successful Bidder selected as above provided and such an award, if made, will be made within **one hundred twenty (120) calendar days** after opening of the bid proposals. The periods of time specified above within which the award of Contract may be made will be subject to an extension for such further period as may be agreed upon in writing between BAIFA and the Bidder concerned. BAIFA reserves the right to reject any or all bids and to waive any informality in the bids or in the bid process. Obvious cases of bid unbalancing may be cause for rejection.

DocuSign Envelope ID: 894511EA-295B-49EB-A393-D26A6837FDD4

BAIFA reserves the right to reject any and all bids and not award a Contract to a Bidder that does not meet the requirement of the Department of Industrial Relations pursuant to Labor Code section 1725.5. Refer to **Part 1, Invitation for Bid**, General Conditions, of this IFB.

BAIFA is in the process of obtaining Encroachment Permits from Caltrans, local agencies and resource agencies for Segment I. If after receipt of the bids for the project, an Encroachment Permit has not been obtained, BAIFA reserves the right to reject all bids and re-advertise the project or extend the award period as agreed in writing between BAIFA and the Bidder.

Additionally, BAIFA is in the process of obtaining various permits from Caltrans, local agencies and resource agencies for Segment II. Work on Segment II will begin following Segment I and is conditional and strictly contingent upon BAIFA securing the required permits and issuance of Segment II NTP within 12 months from NOA. The time period for issuance of Segment II NTP may be extended as agreed in writing between BAIFA and the Bidder. The selected contractor is cautioned not to expend resources or perform any work related to Segment II until receipt of Segment II NTP.

14. Basis of Award

The criteria for determining the successful Bidder will include the Bidder's responsiveness to the requirements of the Contract Documents, Bidder's responsibility and price. Any Bidder may be required to furnish evidence satisfactory to BAIFA that it and its proposed subcontractors have sufficient means and experience in the type of work called for in the Contract Documents to assure completion of the Contract in a satisfactory manner. Award, if made, will be to the lowest responsible and responsive Bidder, based on the Total Contract Price for Segment I and Segment II.

15. Protest Procedures

The following procedures will be used by Bidders seeking review of the Contract Documents or the Contract process:

15.1 General

Bidder protests will be addressed to the Bay Area Infrastructure Financing Authority, Attention: Michael Brinton, Contracts Specialist, and clearly marked "Bid Protest" on the outside of the envelope.

15.2 Protest of Specifications

Prospective Bidders may submit written protest of items in the Contract Documents on the grounds that the specifications are biased, unduly restrictive, discourage competition, or do not comply with state or local law or regulation **no later than 4:00 P.M. (PST) on the seventh (7th) calendar day prior to the date bids are due**. Such protests will be reviewed by BAIFA and responded to prior to bid opening. If appropriate, the time of bid opening will be extended to accommodate any changes in the IFB.

DocuSign Envelope ID: 894511EA-295B-49EB-A393-D26A6837FDD4

15.3 Selection Disputes

You may protest the selection of a Contractor on the grounds that BAIFA procedures, or applicable provisions of state or local law, have been violated or inaccurately and/or inappropriately applied by BAIFA by submitting to the Project Manager a written explanation of the basis for protest **no later than 4:00 P.M. (PST) on the third (3rd) business day after the date BAIFA approves the award or the date the Bidder is notified that it was not selected, whichever is later, for objection to Contractor selection**.

Protests of recommended awards must clearly and specifically describe the basis for the protest in sufficient detail for the BAIFA review officer to recommend a resolution to the BAIFA Executive Director.

The BAIFA Executive Director will respond to the protest in writing, based on the recommendation of a staff review officer.

Should the protesting bidder wish to appeal the decision of the Executive Director, it may file a written appeal with BAIFA, no later than 4:00 P.M. (PST) on the third (3rd) business day after receipt of the written response from the Executive Director. BAIFA's decision will be the final agency decision.

Authorization to award a Contract to a particular Contractor by BAIFA will be deemed conditional until the expiration of the protest period or, if a protest is filed, the issuance of a written response to the protest by the Executive Director or, if the decision of the Executive Director is appealed, the issuance of BAIFA's decision.

16. Public Records

This IFB and any material submitted by a Bidder in response to this IFB are subject to public inspection under the California Public Records Act (Government Code Section 6250 *et seq*.), unless exempt by law.

DocuSign Envelope ID: 894511EA-295B-49EB-A393-D26A6837FDD4

PART 4. CONTRACT FORMS

DocuSign Envelope ID: 894511EA-295B-49EB-A393-D26A6837FDD4

1. **Construction Agreement ***
2. **Performance Bond ***
3. **Payment Bond ***
4. **Alternate IRS Form W-9**

*** Form must be acknowledged by a Notary**

Return ALL Contract Forms To:

Michael Brinton

Joseph P. Bort MetroCenter
101 Eighth Street
Oakland, California 94607-4700
Direct Phone: (510) 817-5864 (510) 817 5727
Main Phone: (510) 817-5700
Fax: (510) 817-5848

PLEASE NOTE:

It is not necessary to complete these forms to bid on this project. But the Bidder who is awarded the Contract will be required to execute all Contract Forms.

DocuSign Envelope ID: 894511EA-295B-49EB-A393-D26A6837FDD4

CONTRACT FORM #1

CONTRACT NO. BAIFA-200

Express Lanes Backhaul Communications Network

CONSTRUCTION AGREEMENT

This Agreement is entered into between the BAY AREA INFRASTRUCTURE FINANCING AUTHORITY ("BAIFA") and _____("Contractor") as of the date set out below.

BAIFA and Contractor agree as follows:

1. Scope of Work

You will provide all labor, materials, tools, equipment and incidentals necessary to perform the work described as in a satisfactory and workmanlike manner and in accordance with the provisions of the Contract Documents.

2. Compensation

Full compensation for the complete and satisfactory performance of the work under this Agreement, in strict compliance with all of the provisions of the Contract Documents, and for payment of all obligations incurred or applicable to performance of the work, will be the Total Contract Price shown in the Schedule of Quantities and Prices attached hereto as this amount may be adjusted in accordance with other provisions of the Agreement. Payment of this compensation will be made by BAIFA in accordance with the appropriate payment provisions of the Agreement.

3. Contract Documents – Order of Precedence

The following components of the Contract Documents are incorporated by reference into this Construction Agreement:

Order of Precedence (Highest in order listed first)

Notice to Contractors and Special Provisions	Parts 1 through 4
Notice to Contractors and Special Provisions	Part 5 – Bid Forms
Notice to Contractors and Special Provisions	Part 6 - Special Conditions
Notice to Contractors and Special Provisions	Part 7 – General Conditions
Notice to Contractors and Special Provisions	Part 10 & 11– Construction Details and Performance Requirements and Penalties
Appendix A - Contract Drawings and Plans	
Appendix B - Caltrans Revised Standard Specifications	Dated February 27, 2015
Appendix C - Logical Network Details	
Appendix D - Wage Determinations	
Caltrans Standard Specifications	Dated 2010

DocuSign Envelope ID: 894511EA-295B-49EB-A393-D26A6837FDD4

Caltrans Revised Standard Plans	Current Version
Caltrans Standard Plans	Dated 2010

These documents are essential parts of the agreement between the parties and are intended to be complementary and to describe and provide for a complete work. In the event of any discrepancy between any drawing and the dimensions written thereon, the dimensions will be taken as correct. Detail drawings will prevail over general drawings. In the event of any other conflict among the documents, precedence will be given in the order listed above.

4. Quality of Work

Where the plans or specifications describe portions of the work in general terms, but not in complete detail, it is understood that only the best general practice is to prevail and that only materials and workmanship of the first quality are to be provided.

5. Time of Performance

Commence work for Segment I under the Agreement **within six (6) calendar days** following issuance of the Notice of Award, commence work immediately following issuance of the Notice to Proceed for Segment II, if any, and complete all of the work under the Agreement by the dates specified in **Part 6, Special Conditions**. The issuance of a Notice to Proceed is contingent upon Contractor's submittal of proper insurance certificates.

6. Entire Agreement

This Agreement constitutes the entire agreement between BAIFA and Contractor respecting the subject matter hereof. All other agreements, understandings and communications between the parties hereto are deemed to be merged into and superseded by the provisions of this Agreement. No modification or change to this Agreement will have any force or effect unless it is in writing and expressly referred to as being a Change Order to this Agreement.

7. Responsible Conduct

Contractor will at all times deal in good faith and truthfully with BAIFA. Contractor will submit documentation to BAIFA, including reports, claims, requests for change orders, equitable adjustment, Contract modifications or requests of any kind seeking increased compensation or decreases of an obligation on this Contract only in good faith and upon an honest evaluation of the underlying circumstances and an honest calculation of any amount being sought. A violation of this standard of conduct will subject the Contractor to being deemed "non-responsible" and potentially ineligible for future contracts with BAIFA.

DocuSign Envelope ID: 894511EA-295B-49EB-A393-D26A6837FDD4

IN WITNESS WHEREOF two identical counterparts of this instrument, each of which will for all purposes be deemed an original thereof, have been duly executed by BAIFA and Contractor respectively, on the dates set out below.

BAY AREA INFRASTRUCTURE FINANCING AUTHORITY	**CONTRACTOR**
Steve Heminger, Executive Director	Name, Title
Date	Date
	Contractor's License No.
	Class/Expiration Date

DocuSign Envelope ID: 894511EA-295B-49EB-A393-D26A6837FDD4

CONTRACT FORM #2

PERFORMANCE BOND FOR PUBLIC WORKS

KNOW ALL PEOPLE BY THESE PRESENTS: That

WHEREAS, the BAY AREA INFRASTRUCTURE FINANCING AUTHORITY ("BAIFA") has awarded to

_____

("Principal") a contract described as:

CONTRACT NO. BAIFA-200

Express Lanes Backhaul Communications Network

and all of the Contract Documents attached to or forming a part of said Agreement are hereby referred to and made a part hereof; and

WHEREAS, said Principal is required under the terms of said contract to furnish a bond for the faithful performance of said contract,

NOW THEREFORE, we, the Principal and

_____

as Surety, are held and firmly bound unto the BAY AREA INFRASTRUCTURE FINANCING AUTHORITY (hereinafter called "BAIFA"), in the penal sum of **$** _____, lawful money of the United States, for the payment of which sum well and truly to be made, we bind ourselves, our heirs, executors, administrators and successors, jointly and severally, firmly by these presents.

The condition of this obligation is such that if the above-bound Principal, its heirs, executors, administrators, successors or assigns, shall in all things stand to and abide by, and well and truly keep and perform the covenants, conditions and agreements in the said contract and any alteration thereof made as therein provided, on their part, to be kept and performed at the time and in the manner therein specified, and in all respects according to their true intent and meaning, and shall indemnify and save harmless BAIFA, its officers, agents, and employees, as therein stipulated, then this obligation shall become null and void; otherwise it shall be and remain in full force and effect.

And the said Surety for value received, hereby stipulates and agrees that no change, extension of time, alteration or addition to the terms of the contract or to the work to be performed thereunder shall in any way affect its obligations on this bond, and it does hereby waive notice of any change, extension of time, alteration or additions to the terms of the contract.

In the event suit is brought upon this bond by BAIFA and judgment is recovered, Surety shall pay all costs incurred by BAIFA in such suit, including a reasonable attorney's fee to be fixed by the Court.

DocuSign Envelope ID: 894511EA-295B-49EB-A393-D26A6837FDD4

IN WITNESS WHEREOF this instrument has been duly executed by Principal and Surety on this

_____ day of _____, 2015.

PRINCIPAL:	**SURETY:**
_____ (Company)	_____ (Company)
_____ (Signature)	_____ (Signature)
_____ (Name – Please Print)	_____ (Name – Please print)
_____ (Title)	_____ (Title)

NOTE: Signatures of those executing for Surety must be acknowledged by a Notary.

NOTE TO SURETY COMPANY:

The following form of acknowledgement should be used. If any other form of acknowledgement is used, there must be submitted a certified copy of unrevoked resolution of authority for the attorney-in-fact.

SURETY COMPANY ATTORNEY-IN-FACT

State of California)

County of _____)

On _____, before me, the undersigned, a Notary Public in and for

the State, personally appeared_____, known to me to be the duly authorized Attorney-in-Fact of the corporate Surety named in the within instrument, known to me to be authorized to execute that instrument on behalf of said corporation, known to me to be the person whose name is subscribed to such instrument as the Attorney-in-Fact of said corporation, and acknowledged to me that he (she) subscribed the name of said corporation thereto as Surety, and his (her) own name as Attorney-in-Fact and that said corporation executed the same.

DocuSign Envelope ID: 894511EA-295B-49EB-A393-D26A6837FDD4

WITNESS MY HAND AND OFFICIAL SEAL:

(SEAL)

_____
Notary Public for the State of California

Acknowledgement by Attorney-in-Fact must be attached.
Corporate seals of Principal and Surety must be attached.

DocuSign Envelope ID: 894511EA-295B-49EB-A393-D26A6837FDD4

CONTRACT FORM #3

PAYMENT BOND FOR PUBLIC WORKS

KNOW ALL PEOPLE BY THESE PRESENTS: That

WHEREAS, the BAY AREA INFRASTRUCTURE FINANCING AUTHORITY ("BAIFA") and

_____

("Principal") have entered into a Construction Agreement for the furnishing of all materials, labor, services and transportation necessary, convenient and proper to the performance of

CONTRACT NO. BAIFA-200
Express Lanes Backhaul Communications Network

and all of the Contract Documents attached to or forming a part of said Agreement are hereby referred to and made a part hereof; and

WHEREAS, said Principal is required by Chapter 5 (commencing at Section 3225) and Chapter 7 (commencing at Section 3247), Title 15, Part 4, Division 3 of the California Civil Code to furnish a bond in connection with said contract;

NOW THEREFORE, we, the Principal and

_____

as Surety, are held and firmly bound unto the Bay Area Infrastructure Financing Authority (hereinafter called "BAIFA") in the penal sum of **$** _____ in lawful money of the United States of America for the payment of which sum well and truly to be made, we bind ourselves, our heirs, executors, administrators, successors and assigns, jointly and severally, firmly by these presents.

THE CONDITION OF THIS OBLIGATION IS SUCH that if said Principal or its subcontractors, heirs, executors, administrators, successors, or assigns, shall fail to pay any of the persons named in Section 3181 of the California Civil Code, amounts due under the Unemployment Insurance Code with respect to work or labor performed by any such claimant, or for any amounts required to be deducted, withheld and paid over to the Employment Development Department from the wages of employees of the Contractor and Subcontractors pursuant to Section 13020 of the Unemployment Insurance Code with respect to the work and labor, the Surety will pay for the same, in an amount not exceeding the sum hereinabove specified, and also, in case suit is brought upon this bond, a reasonable attorney's fee to be fixed by the court.

This bond shall inure to the benefit of any of the persons named in Section 3181 of the California Civil Code, so as to give a right of action to such persons or their assigns in any suit brought upon this bond.

It is further stipulated and agreed that the Surety on this bond shall not be exonerated or released from the obligation of this bond by any change, extension of time for performance, addition, alteration or modification in, to, or any contract, plans, or agreement pertaining or relating to any scheme or work of improvement hereinabove described or pertaining to or relating to the furnishing of labor, materials, or equipment therefore, nor by any change or modification of any terms of payment or extension of the time for any payment pertaining or relating to any scheme or work of improvement hereinabove described, nor by any rescission or attempted rescission of the contract, agreement or bond, nor by any conditions precedent or subsequent in the bond attempting to limit the right of recovery of claimants otherwise entitled to recover under any such contract or agreement or under the bond, nor by any fraud practiced by any person other than the claimant seeking to recover on the bond and that this bond be construed most strongly against the Surety and in favor of all persons for whose benefit such bond is given, and under no circumstances shall Surety be released from liability to those for whose benefit such bond has been given, by reason of any breach of contract between

DocuSign Envelope ID: 894511EA-295B-49EB-A393-D26A6837FDD4

BAIFA and original Contractor or on the part of any oblige named in such bond, but the sole conditions of recovery shall be that claimant is a person described in Section 3110 or 3112 of the California Civil Code, and has not been paid the full amount of its claim and that Surety does hereby waive notice of any such change, extension of time, addition, alteration or modification herein mentioned.

IN WITNESS WHEREOF this instrument has been duly executed by Principal and Surety on this _____ day of _____, 2014.

PRINCIPAL:	**SURETY:**
_____	_____
(Company)	(Company)
_____	_____
(Signature)	(Signature)
_____	_____
(Name – Please Print)	(Name – Please print)
_____	_____
(Title)	(Title)

NOTE TO SURETY COMPANY:

The following form of acknowledgement should be used. If any other form of acknowledgement is used, there must be submitted a certified copy of un-revoked resolution of authority for the attorney-in-fact.

SURETY COMPANY ATTORNEY-IN-FACT

State of California)
County of _____)

On _____, before me, the undersigned, a Notary Public in and for the State, personally appeared_____, known to me to be the duly authorized Attorney-in-Fact of the corporate Surety named in the within instrument, known to me to be authorized to execute that instrument on behalf of said corporation, known to me to be the person whose name is subscribed to such instrument as the Attorney-in-Fact of said corporation, and acknowledged to me that he (she) subscribed the name of said corporation thereto as Surety, and his (her) own name as Attorney-in-Fact and that said corporation executed the same.

WITNESS MY HAND AND OFFICIAL SEAL:

(SEAL)

_____
Notary Public for the State of California

Acknowledgement by Attorney-in-Fact must be attached.
Corporate seals of Principal and Surety must be attached.

DocuSign Envelope ID: 894511EA-295B-49EB-A393-D26A6837FDD4

ALTERNATE FORM----W9

CONTRACT FORM #4

ALTERNATE TO FORM W-9

BAY AREA INFRASTRUCTURE FINANCING AUTHORITY
Payer's Request for Taxpayer Identification Number and Certification

Name as shown on account *(If joint account, must list and circle the name of the person or entity whose number you enter in part 1 below.)*

Business Name_____

Address_____

City, State, and ZIP code_____

List account number(s) here_____

PART 1 Taxpayer Identification Number --- For All Accounts

Enter your taxpayer Identification number in the appropriate box. For most individuals, this is your social security number.

Social Security Number		Employer Identification Number
| |	**or**	| |

PART 2 For Payees Exempt From Backup Withholding (See Instructions on IRS form W-9)

PART 3 Certification

Under penalty of perjury, I certify that:

(1) The Number shown on this form is my correct Taxpayer Identification Number (or I am waiting for a number to be issued to me), and

(2) I am not subject to backup withholding either because I have not been notified by the Internal Revenue Service (IRS) that I am subject to backup withholding as a result of a failure to report all interest or dividends, or the IRS has notified me that I am no longer subject to backup withholding.

CERTIFICATION INSTRUCTIONS – You must cross out item (2) above if you have been notified by IRS that you are subject to backup withholding because of underreporting interest or dividends on your tax return. However, if after being notified by IRS that you were subject to backup withholding you received another notification from IRS that you are no longer subject to backup withholding, do not cross out item (2).

Please Sign	Signature →	Date

Please check one box in each section below that best describes your type of organization and the transaction for which we make payment to you.

ORGANIZATION:

☐ Individual ☐ Corporation

☐ Two or more Indiv. (Joint) ☐ Real Estate Agent

TRANSACTION:

☐ Rents (Space & Machine)

☐ Medical & Health Care Service

DocuSign Envelope ID: 894511EA-295B-49EB-A393-D26A6837FDD4

- ☐ Sole Proprietorship
- ☐ Partnership
- ☐ Trust /Estate
- ☐ Tax-Exempt Organization
- ☐ Public Entity
- ☐ Other Organization (Specify)
- ☐ Other Services (Specify)
- ☐ Interest
- ☐ Goods/Merchandise
- ☐ Freight
- ☐ Other Transaction (Specify)

DocuSign Envelope ID: 894511EA-295B-49EB-A393-D26A6837FDD4

PART 5. BID FORMS

1. **Bid Form, Schedule of Quantities and Prices, Contractor Information**
2. **Bid Form, Minimum Qualification Certification**
3. **Bidder's Bond ***
4. **Designation of Subcontractors – Fair Practices Act**
5. **Affidavit of Non-Collusion ****
6. **Certification Regarding Iran Contracting Act of 2010**
7. **Contractors Reference Form**
8. **Insurance Certificate Checklist**

*** Form must be acknowledged by a Notary**
****Form must be subscribed and sworn to before Notary Public or other Officer**

PLEASE NOTE:

These forms are designed to contain essential information concerning the Bidder and the bid, and must be completed such that they can be read. If any of the completed forms are illegible, BAIFA may, at its option, declare the entire bid unresponsive.

DocuSign Envelope ID: 894511EA-295B-49EB-A393-D26A6837FDD4

BID FORM #1

BID FORM

CONTRACT NO. BAIFA-200

Express Lanes Backhaul Communications Network

FROM: BIDDER'S NAME_____

TO: THE BAY AREA INFRASTRUCTURE FINANCING AUTHORITY,

In compliance with the **Invitation For Bids** for this project, the undersigned Bidder, being thoroughly familiar with the terms and conditions of the Contract Documents, hereby proposes and agrees fully to perform the work within the time stated and in strict accordance with the Contract Documents.

The Bidder hereby acknowledges receipt of the following Addenda to the Contract Documents:

Addendum No. _____ Dated _____

Addendum No. _____ Dated _____

Addendum No. _____ Dated _____

Addendum No. _____ Dated _____

Addendum No. _____ Dated _____

Addendum No. _____ Dated _____

Bidder hereby incorporates by reference all provisions of the Contract Documents that follow this Bid Form.

DocuSign Envelope ID: 894511EA-295B-49EB-A393-D26A6837FDD4

SCHEDULE OF QUANTITIES AND PRICES
CONTRACT NO. BAIFA-200
EA No. 2J330
Express Lanes Backhaul Communications Network

The prices quoted below include all applicable taxes, fees, permits, delivery, the cost of Bonds, insurance, and all other charges and expenses, direct or indirect, as required.

Item No.		Item Description	Unit of Measure	Estimated Quantity	Unit Price	Item Total
SEGMENT I						
1		CONSTRUCTION AREA SIGNS	LS	1		
2		TRAFFIC CONTROL SYSTEM	LS	1		
3		CHECK AND TEST EXISTING IRRIGATION FACILITIES	LS	1		
4		OPERATE EXISTING IRRIGATION FACILITIES	LS	1		
5		JOB SITE MANAGEMENT	LS	1		
6		PREPARE STORM WATER POLLUTION PREVENTION PLAN	LS	1		
7		TEMPORARY DRAINAGE INLET PROTECTION	EA	70		
8		STREET SWEEPING	LS	1		
9		TEMPORARY FENCE (ESA)	LF	205		
10		TEMPORARY CONCRETE WASHOUT (PORTABLE)	LS	1		
11		TEMPORARY FIBER ROLLS	LF	2,000		
12		WOOD MULCH	CY	110		
13		FIBER ROLLS	LF	2,000		
14		HOT MIX ASPHALT (TYPE A)	TON	810		
15		OBJECT MARKER	EA	232		
16		MAINTAINING EXISTING TRAFFIC MANAGEMENT SYSTEM ELEMENTS DURING CONSTRUCTION	LS	1		
17		BACKHAUL COMMUNICATIONS SYSTEM	LS	1		
18		MOBIILIZATION (5%)	LS	1		
19		OPERATIONS & MAINTENANCE (MONTHLY)	EA	18		
20		100 HOURS OF 24-HOUR, 7-DAY A WEEK ONSITE LABOR AND SUPPORT	EA	1		
21		ONE (1) YEAR OF 24-HOUR, 7-DAY A WEEK REMOTE SECURITY INCIDENT HANDLING	LS	1		
22		SPARE PARTS	LS	1		
		TOTAL PRICE SEGMENT I	$_____			
SEGMENT II						
1		CONSTRUCTION AREA SIGNS	LS	1		

DocuSign Envelope ID: 894511EA-295B-49EB-A393-D26A6837FDD4

2		TRAFFIC CONTROL SYSTEM	LS	1		
3		CHECK AND TEST EXISTING IRRIGATION FACILITIES	LS	1		
4		OPERATE EXISTING IRRIGATION FACILITIES	LS	1		
5		JOB SITE MANAGEMENT	LS	1		
6		PREPARE STORM WATER POLLUTION PREVENTION PLAN	LS	1		
7		TEMPORARY DRAINAGE INLET PROTECTION	EA	50		
8		STREET SWEEPING	LS	1		
9		TEMPORARY FIBER ROLLS	LF	30,524		
10		WOOD MULCH	CY	1,925		
11		FIBER ROLLS	LF	30,524		
12		HOT MIX ASPHALT (TYPE A)	TON	810		
13		OBJECT MARKER	EA	432		
14		MAINTAINING EXISTING TRAFFIC MANAGEMENT SYSTEM ELEMENTS DURING CONSTRUCTION	LS	1		
15		BACKHAUL COMMUNICATIONS SYSTEM	LS	1		
16		MOBIILIZATION (5%)	LS	1		
17		OPERATIONS & MAINTENANCE (MONTHLY)	EA	12		
18		100 HOURS OF 24-HOUR, 7-DAY A WEEK ONSITE LABOR AND SUPPORT	EA	1		
19		ONE (1) YEAR OF 24-HOUR, 7-DAY A WEEK REMOTE SECURITY INCIDENT HANDLING	LS	1		
		TOTAL PRICE SEGMENT II	$_____			

The total Contract Price shall be the sum of the Bid Items above for both Segment I and Segment II.

Total Contract Price:

Segment I	+	**Segment II**	=	**Total Contract Price**
In Words:		**In Words:**		**In Words:**
	+		=	
Numbers ($)		**Numbers ($)**		**Numbers ($)**
	+		=	

DocuSign Envelope ID: 894511EA-295B-49EB-A393-D26A6837FDD4

SUBMITTED BY:

Full and Correct Name of Bidder:

_____

_____

Business Address:

_____

_____

Phone: _____

Fax: _____

California Contractor's License:

Number: _____

Class: _____

Expires: _____

CONTRACTOR INFORMATION

The names of all persons as principals interested in the foregoing bid are as follows:

(IMPORTANT NOTICE: If Bidder or other interested person is a corporation, give legal name of corporation, and names of the President and Secretary thereof; if a partnership, give name of the firm, also names of all individual partners composing firm; if Bidder or other interested person is an individual, give first and last names in full. If a Bidder is a joint venture, supply the above information for each joint venture partner.)

_____

_____

_____

_____

_____

DocuSign Envelope ID: 894511EA-295B-49EB-A393-D26A6837FDD4

The person signing this Bid Form for the Bidder certifies that he or she is authorized by the Bidder to do so and that the Bidder will be bound contractually by that signature.

Signature _____

Name _____
(Print)

Title _____

Date _____

DocuSign Envelope ID: 894511EA-295B-49EB-A393-D26A6837FDD4

BID FORM #2

BID FORM

CONTRACT NO. BAIFA-200

Express Lanes Backhaul Communications Network

FROM: BIDDER'S NAME_____

TO: THE BAY AREA INFRASTRUCTURE FINANCING AUTHORITY,

By signing below you attest that your proposal meets the minimum qualification detailed in the IFB Part 3, Item 2, Minimum Qualifications and detailed in the Bid Form below, attach additional pages if more space is required:

	Part 3. Instructions to Bidders, Item 2: Minimum Qualifications	Proposal Content
1.	**Must be met by Bidder's direct firm experience:**	
1a.	The Bidder serving as the prime contractor will have successfully deployed or operated and maintained two or more fiber optic Metropolitan Area Networks (MAN) consisting of at least three (3) field communication hubs in the past five (5) years. For purposes of these minimum qualifications, MAN includes layer 2 and layer 3 network hardware installed in field cabinets and including software, protocols, network management and security configurations.	Project Name(s): Reference Contact(s) (email address): Description(s):

DocuSign Envelope ID: 894511EA-295B-49EB-A393-D26A6837FDD4

2.	**May be met by Bidder's direct firm experience or the experience of a subcontractor for which the prime contractor is responsible:**	
2a..	The Bidder will have provided a minimum of two (2) years of maintenance and network administration services for MAN equipment and provided network management and security management support for at least one (1) MAN in a highly available environment in the past five (5) years.	Prime or Subcontractor Project: Project Name(s): Reference Contact(s) (email address): Description(s):

DocuSign Envelope ID: 894511EA-295B-49EB-A393-D26A6837FDD4

2b.	The Bidder will have provided operations and maintenance based on the service level requirements in Part 10, Construction Details and Part 11, Operations & Maintenance, Performance Requirements and Penalties, on three (3) projects within the last three (3) years.	Prime or Subcontractor Project: Project Name(s): Reference Contact(s) (email address): Description(s):

DocuSign Envelope ID: 894511EA-295B-49EB-A393-D26A6837FDD4

2c.	The Bidder will have a minimum of five (5) years of experience in the installation of fiber optic cables, including fusion splicing, and the terminating and testing of single mode fiber optic cables. The Bidder will demonstrate that they have successfully performed and tested at least 2,000 fusion splices within the last five years. Required experience includes installation of fiber optic connectors, inspection of fiber optic strands via optical time-domain reflectometer (OTDR) devices, and completion of end-to-end attenuation tests using power meter/light source equipment.	**Project #1** Prime or Subcontractor Project: Project Name(s): Reference Contact(s) (email address): Description(s):

DocuSign Envelope ID: 894511EA-295B-49EB-A393-D26A6837FDD4

2c.	The Bidder will have a minimum of five (5) years of experience in the installation of fiber optic cables, including fusion splicing, and the terminating and testing of single mode fiber optic cables. The Bidder will demonstrate that they have successfully performed and tested at least 2,000 fusion splices within the last five years. Required experience includes installation of fiber optic connectors, inspection of fiber optic strands via optical time-domain reflectometer (OTDR) devices, and completion of end-to-end attenuation tests using power meter/light source equipment.	**Project #2** Prime or Subcontractor Project: Project Name(s): Reference Contact(s) (email address): Description(s):

DocuSign Envelope ID: 894511EA-295B-49EB-A393-D26A6837FDD4

2c.	The Bidder will have a minimum of five (5) years of experience in the installation of fiber optic cables, including fusion splicing, and the terminating and testing of single mode fiber optic cables. The Bidder will demonstrate that they have successfully performed and tested at least 2,000 fusion splices within the last five years. Required experience includes installation of fiber optic connectors, inspection of fiber optic strands via optical time-domain reflectometer (OTDR) devices, and completion of end-to-end attenuation tests using power meter/light source equipment.	**Project #3** Prime or Subcontractor Project: Project Name(s): Reference Contact(s) (email address): Description(s):

AFFIDAVIT & SIGNATURE OF AUTHORIZING OFFICIAL

Name of Proposing Company	
Address	
City, State, Zip	
Phone Number	
Email Address	
By signing below you attest that your proposal meets the minimum qualification detailed in the IFB Part 3, Item 2, Minimum Qualifications and detailed in the Bid Form above.	
Name of Authorizing Official	
Signature	
Date	

DocuSign Envelope ID: 894511EA-295B-49EB-A393-D26A6837FDD4

BID FORM #3

BIDDER'S BOND

KNOW ALL PEOPLE BY THESE PRESENTS: That

WHEREAS the undersigned, _____

as Principal and _____

as Surety, are held and firmly bound unto the Bay Area Infrastructure Financing Authority, a joint powers agency of the State of California (hereinafter called "BAIFA") in the penal sum of **10% of the Total Contract Price** of the Principal above named, submitted by said Principal to BAIFA for the work described below, for the payment of which sum in lawful money of the United States, well and truly to be made, we bind ourselves, our heirs, executors, administrators and successors, jointly and severally, firmly by these presents.

The condition of this obligation is such that a Bid to BAIFA for performance of that certain construction described as

CONTRACT NO. BAIFA-200

Express Lanes Backhaul Communications Network

has been submitted by Principal to BAIFA.

NOW THEREFORE, if the aforesaid Principal shall not withdraw said bid within **120 calendar days** after said opening, and shall within the period specified therefore, or if no period be specified, within **six working days** after the prescribed forms are presented to Principal for signature, enter into a written contract with BAIFA in the prescribed form in accordance with the Bid as accepted, and file two bonds with BAIFA; a Performance Bond in the amount of **100%** of the Contract Amount to guarantee faithful performance of the work under the Contract and a Payment Bond in the amount of **100%** of the Contract Amount to guarantee payment for labor and materials, as required by law, or in the event of the withdrawal of said Bid within the period specified or the failure to enter into such contract and give such bonds within the time specified, if the Principal shall pay BAIFA the difference between the amount specified in said Bid and the amount for which BAIFA may procure the required work, if the latter amount be in excess of the former, together with all costs incurred by BAIFA in again calling for bids, should that become necessary, then the above obligation shall be void and of no effect, otherwise to remain in full force and effect.

Surety, for value received, hereby stipulates and agrees that no change, extension of time, alteration or addition to the terms of the Contract on the call for Bids, or to the work to be performed thereunder, shall in any way affect its obligation under this Bond, and it does hereby waive notice of any such change, extension of time, alteration or addition to the terms of said Contract or the call for bids, or to the work, or to the specifications.

In the event suit is brought upon this Bond by BAIFA and judgment is recovered, the Surety shall pay all costs incurred by BAIFA in such suit, including a reasonable attorney's fee to be fixed by the court in accordance with applicable statutory law.

DocuSign Envelope ID: 894511EA-295B-49EB-A393-D26A6837FDD4

IN WITNESS WHEREOF, we have hereunto set our hands and seals on this _____ day of _____, 2015.

PRINCIPAL:	**SURETY:**
_____ (Company)	_____ (Company)
_____ (Signature)	_____ (Signature)
_____ (Name – Please Print)	_____ (Name – Please print)
_____ (Title)	_____ (Title)

NOTE: Signatures of those executing for Surety must be acknowledged by a Notary.

NOTE TO SURETY COMPANY:

The following form of acknowledgement should be used. If any other form of acknowledgement is used, there must be submitted a certified copy of unrevoked resolution of authority for the attorney-in-fact.

SURETY COMPANY ATTORNEY-IN-FACT

State of California)
County of _____)

On _____, before me, the undersigned, a Notary Public in and for

the State, personally appeared_____, known to me to be the duly authorized Attorney-in-Fact of the corporate Surety named in the within instrument, known to me to be authorized to execute that instrument on behalf of said corporation, known to me to be the person whose name is subscribed to such instrument as the Attorney-in-Fact of said corporation, and acknowledged to me that he (she) subscribed the name of said corporation thereto as Surety, and his (her) own name as Attorney-in-Fact and that said corporation executed the same.

WITNESS MY HAND AND OFFICIAL SEAL:

(SEAL)

_____
Notary Public for the State of California

Acknowledgement by Attorney-in-Fact must be attached.
Corporate seals of Principal and Surety must be attached.

BID FORM #4

DESIGNATION OF SUBCONTRACTORS IN COMPLIANCE WITH THE SUBLETTING AND SUBCONTRACTING FAIR PRACTICES ACT

CONTRACT NO. BAIFA-200

Bidder:_____

Bidder shall completely fill in the form below for each proposed subcontract in excess of one-half percent of Bidder's Total Contract Price or, in bids for the construction of streets or highways, including bridges, in excess of one-half of one percent of the Bidder's Total Contract Price or $10,000, whichever is greater, in compliance with the Public Contract Code of the State of California, Sections 4100-4114. If more space is needed, duplicate this sheet.

Name of Subcontractor	Subcontractor License Number	City/State	Portion of Work/Bid Item

Total Contract Amount:$ _____ Amount to be subcontracted: $_____

Percentage to be Subcontracted: _____%

DocuSign Envelope ID: 894511EA-295B-49EB-A393-D26A6837FDD4

DocuSign Envelope ID: 894511EA-295B-49EB-A393-D26A6837FDD4

BID FORM #5

Affidavit of Non-Collusion

to be executed by Bidder and submitted with bid

CONTRACT NO. BAIFA-200

Express Lanes Backhaul Communications Network

State of California)
)
County of _____).

_____
(Name)

being first duly sworn, deposes and says he or she is

_____ of _____
(Position / Title) (Company)

the party making the foregoing bid and that the bid is not made in the interest of, or on behalf of, any undisclosed person, partnership, company, association, organization, or corporation; that the bid is genuine and not collusive or sham; that the Bidder has not directly or indirectly induced or solicited any other Bidder to put in a false or sham bid; and has not directly or indirectly colluded, conspired, connived, or agreed with any Bidder or anyone else to put in a sham bid, or that anyone shall refrain from bidding; that the Bidder has not in any manner directly or indirectly, sought by agreement, communication, or conference with anyone to fix the bid price of the Bidder or any other Bidder, or to fix any overhead, profit, or cost element of the bid price, or of that of any other Bidder, or to secure any advantage against the public body awarding the contract of anyone interested in the proposed contract; that all statements contained in the bid are true; and, further, that the Bidder has not, directly or indirectly, submitted his or her bid price or any breakdown thereof, or the contents thereof, or divulged information or data relative thereto, or paid, and will not pay, any fee to any corporation, partnership, company association, organization, bid depository, or to any member or agent thereof to effectuate a collusive or sham bid.

_____
Signature of Affiant

Subscribed and sworn to before me on this _____day of _____, 2015.

at _____, _____.
(City) (State)

_____
Signature of Notary Public or Officer Taking Oath

Seal of Notary Public or
Officer Taking Oath

DocuSign Envelope ID: 894511EA-295B-49EB-A393-D26A6837FDD4

BID FORM #6

Iran Contracting Act

(Public Contract Code sections 2200-2208)

Prior to bidding on, submitting a proposal or executing a contract or renewal for a BAIFA contract for goods or services of $1,000,000 or more, a Proposer must either: a) certify it is not on the current list of persons engaged in investment activities in Iran created by the California Department of General Services ("DGS") pursuant to Public Contract Code section 2203(b) and is not a financial institution extending twenty million dollars ($20,000,000) or more in credit to another person, for 45 days or more, if that other person will use the credit to provide goods or services in the energy sector in Iran and is identified on the current list of persons engaged in investment activities in Iran created by DGS; or b) demonstrate it has been exempted from the certification requirement for that solicitation or contract pursuant to Public Contract Code section 2203(c) or (d).

To comply with this requirement, please insert your Proposer or financial institution name and Federal ID Number (if available) and complete one of the options below. Please note: California law establishes penalties for providing false certifications, including civil penalties equal to the greater of $250,000 or twice the amount of the contract for which the false certification was made; contract termination; and three-year ineligibility to bid on contracts. (Public Contract Code section 2205.)

OPTION #1 - CERTIFICATION

I, the official named below, certify I am duly authorized to execute this certification on behalf of the vendor/financial institution identified below, and the vendor/financial institution identified below is not on the current list of persons engaged in investment activities in Iran created by DGS and is not a financial institution extending twenty million dollars ($20,000,000) or more in credit to another person/vendor, for 45 days or more, if that other person/vendor will use the credit to provide goods or services in the energy sector in Iran and is identified on the current list of persons engaged in investment activities in Iran created by DGS.

Proposer Name/Financial Institution (Printed)	*Federal ID Number (or n/a)*
By (Authorized Signature)	
Printed Name and Title of Person Signing	
Date Executed	*Executed in*

OPTION #2 – EXEMPTION

Pursuant to Public Contract Code sections 2203(c) and (d), a public entity may permit a Proposer/financial institution engaged in investment activities in Iran, on a case-by-case basis, to be eligible for, or to bid on, submit a proposal for, or enters into or renews, a contract for goods and services.

DocuSign Envelope ID: 894511EA-295B-49EB-A393-D26A6837FDD4

If you have obtained an exemption from the certification requirement under the Iran Contracting Act, please fill out the information below, and attach documentation demonstrating the exemption approval.

Proposer Name/Financial Institution (Printed)	*Federal ID Number (or N/A)*
By (Authorized Signature)	
Printed Name and Title of Person Signing	*Date Executed*

DocuSign Envelope ID: 894511EA-295B-49EB-A393-D26A6837FDD4

BID FORM #7

Contractors Reference Form

Name of Contractor

Representative Name & Title

Phone Number

References must not be relatives of the Contractor's representative or owners. The references given must be for commercial clients with contracts in excess of $1,000,000 each and similar in nature to the Specifications as outlined in this IFB.

1. Client's Name

Contact Person

Address

City & Zip Code

Phone Number & Email

Description of Work
Performed/Contract
Amount/Start-Finish Dates

Bidders Role/Key Personnel

DocuSign Envelope ID: 894511EA-295B-49EB-A393-D26A6837FDD4

2.	**Client's Name**
	Contact Person
	Address
	City & Zip Code
	Phone Number & Email
	Description of Work Performed/Contract Amount/Start-Finish Dates
	Bidders Role/Key Personnel

3.	**Client's Name**
	Contact Person
	Address
	City & Zip Code
	Phone Number & Email
	Description of Work Performed/Contract Amount/Start-Finish Dates
	Bidders Role/Key Personnel

DocuSign Envelope ID: 894511EA-295B-49EB-A393-D26A6837FDD4

BID FORM #8

Subcontractors Reference Form

(Three (3) references to be provided for each Subcontractor needed to meet Minimum Qualifications)

Name of Subcontractor

Representative Name & Title

Phone Number

References must not be relatives of the Subcontractor's representative or owners. The references given must be for commercial clients with contracts in excess of $100,000 each and similar in nature to the Specifications as outlined in this IFB.

1. Client's Name

Contact Person

Address

City & Zip Code

Phone Number & Email

Description of Work Performed/Contract Amount/Start-Finish Dates

Bidders Role/Key Personnel

DocuSign Envelope ID: 894511EA-295B-49EB-A393-D26A6837FDD4

2.	**Client's Name**
	Contact Person
	Address
	City & Zip Code
	Phone Number & Email
	Description of Work Performed/Contract Amount/Start-Finish Dates
	Bidders Role/Key Personnel

3.	**Client's Name**
	Contact Person
	Address
	City & Zip Code
	Phone Number & Email
	Description of Work Performed/Contract Amount/Start-Finish Dates
	Bidders Role/Key Personnel

DocuSign Envelope ID: 894511EA-295B-49EB-A393-D26A6837FDD4

BID FORM #9

Insurance Certificate Checklist

INSURANCE REQUIREMENTS

Minimum Insurance Coverages. The insurance requirements specified in this section will cover your own liability and the liability arising out of work or services performed under this Agreement by any subconsultants, subcontractors, suppliers, temporary workers, independent contractors, leased employees, or any other persons, firms or corporations that you authorize to work under this Agreement (hereinafter referred to as "Agents.") You must, at your own expense, obtain and maintain in effect at all times during the life of this Agreement the following types of insurance against claims, damages and losses due to injuries to persons or damage to property or other losses that may arise in connection with the performance of work under this Agreement.

You are required to assess the risks associated with work to be performed by Agents under subcontract and to include in every subcontract the requirement that the Agent maintain adequate insurance coverage with appropriate limits and endorsements to cover such risks. To the extent that an Agent does not procure and maintain such insurance coverage, You are responsible for said coverage and assume any and all costs and expenses that may be incurred in securing said coverage or in fulfilling your indemnity obligation as to yourself or any of your Agents in the absence of coverage.

In the event you or your Agents procure excess or umbrella coverage to maintain certain requirements outlined below, these policies will also satisfy all specified endorsements and stipulations, including provisions that your insurance be primary without right of contribution from BAIFA or any of the other Stakeholder Agencies (as defined in **Part 6, Special Conditions, SC-1, Indemnification**). Prior to beginning work under this contract, you must provide BAIFA with satisfactory evidence of compliance with the insurance requirements of this section.

Yes (√)	**Please certify by checking the box below that required coverages will be provided within ten (10) days of BAIFA's notice to firm that it wishes to contract with the firm.**
___	Workers' Compensation Insurance with Statutory limits, and Employer's Liability Insurance with a limit of not less than $1,000,000 per accident, $1,000,000 per employee for disease, and $1,000,000 policy limit for disease, and any and all other coverage of your employees as may be required by applicable law. Bidder is aware of the provisions of Section 3700 of the Labor Code which require every employer to be insured against liability for workers' compensation or to undertake self-insurance in accordance with the provisions of that code, and will comply with such provisions before commencing the performance of the work of this contract. (Such policy will contain a Waiver of Subrogation in favor of BAIFA and each Stakeholder Agency. Such Workers Compensation & Employers Liability may be waived, if and only for as long as you are a sole proprietor or a corporation with stock 100% owned by officers with no employees. Should any bridge work require coverage for the United States Longshore Harbor Workers Act, you agree to furnish proof of insurance, if required.

DocuSign Envelope ID: 894511EA-295B-49EB-A393-D26A6837FDD4

___	Commercial General Liability Insurance for Bodily Injury and Property Damage liability, covering operations of you and your officers, agents, and employees and with limits of liability which will not be less than $1,000,000 combined single limit per occurrence with a general aggregate liability of not less than $2,000,000, and Personal and Advertising injury liability with a limit of not less than $1,000,000. Such policy will contain a Waiver of Subrogation in favor of BAIFA and each Stakeholder Agency. BAIFA and each Stakeholder Agency, and their commissioners, directors, officers, representatives, agents and employees are to be named as additional insureds. Such insurance will be primary and contain a Separation of Insureds clause as respects any claims, losses or liability arising directly or indirectly from Bidder's operations.
___	Business Automobile Liability Insurance for all automobiles owned (if any), used or maintained by you and your officers, agents and employees, including but not limited to owned (if any), leased (if any), non-owned and hired automobiles. Limits of liability which will not be less than $1,000,000 combined single limit per accident for Bodily Injury and Property Damage.
___	Umbrella insurance in the amount of $4,000,000 providing excess limits over Employers Liability, Automobile Liability and Commercial General Liability insurance. Such umbrella coverage will be following form to underlying coverage including all endorsements and additional insured requirements.
___	Property Insurance covering your own Business Personal Property and Equipment to be used in the performance of this agreement, materials or property to be purchased and/or installed on behalf of BAIFA (if any), and builders risk for property in the course of construction (if applicable). You are responsible for all loss or damage, howsoever caused, to the work and materials, until final Acceptance by BAIFA. In addition, the insurance should include "in transit" coverage to the final agreed upon destination of delivery, and including loading and unloading operations and such coverage will be in force until the work and materials are accepted by BAIFA. Coverage will be written on a "Special Form" policy that includes theft, but excludes earthquake, with limits at least equal to the replacement cost of the property. Such policy will contain a Waiver of Subrogation in favor of BAIFA and each Stakeholder Agency.
___	Errors and Omissions Professional Liability Insurance for errors and omissions and the resulting damages, including, but not limited to, economic loss to BAIFA and each Stakeholder Agency and having minimum limits of $1,000,000 per claim. Such policy will contain cyber risk coverages including network and internet security liability coverage, privacy liability coverage and media coverage. The policy will provide coverage for all work performed by you and any work performed or conducted by any subcontractor/consultant working for or performing services on your behalf. No contract or agreement between you and any subcontractor/consultant will relieve you of the responsibility for providing this Errors & Omissions or Professional Liability coverage for all work performed by you and any subcontractor/consultant working on your behalf on the project.

DocuSign Envelope ID: 894511EA-295B-49EB-A393-D26A6837FDD4

General Terms and Conditions
All policies will be issued by insurers acceptable to BAIFA, generally with a Best's Rating of A-VII or better.

Your obligation hereunder may be satisfied in whole or in part by adequately funded self-insurance, upon evidence of financial capacity satisfactory to BAIFA.

Deductible
You are responsible for payment of any deductible or retention on your policies without right of contribution from BAIFA or any Stakeholder Agency. Deductible and retention provisions will not contain any restrictions as to how or by whom the deductible or retention is paid. Any deductible or retention provision limiting payment to the Named Insured is unacceptable.

In the event that BAIFA or any Stakeholder Agency seeks coverage as an additional insured under your insurance policy that contains a deductible or self-insured retention, you must satisfy such deductible or self-insured retention to the extent of loss covered by such policy, for any lawsuit arising from or connected with any alleged act by you, subconsultant, subcontractor, or any of your employees, officers or directors, even if you or subconsultant is not a named defendant in the lawsuit.

Claims Made Coverage
If any insurance specified above is provided on a claim-made (rather than an "occurrence') basis, then in addition to coverage requirements above, such policy must:

1. Ensure that the Retroactive Date is shown on the policy, and such date must be before the date of this Agreement or the beginning of any work under the Contract;

2. Maintain and provide evidence of similar insurance for at least three (3) years following project completion, including the requirement of adding all additional insureds; and

3. If insurance is cancelled or non-renewed, and not replaced with another claims-made policy form with a Retroactive Date prior to the Contract effective date, you must purchase "extended reporting" coverage for a minimum of three (3) years after completion of the work.

Failure to Maintain Insurance
All insurance specified above must remain in force until all work or services to be performed are satisfactorily completed, all of your personnel, subcontractors, and equipment have been removed from Owner Property, and the work or services have been formally accepted. You must notify BAIFA if any of the above required coverages are non-renewed or cancelled. The failure to procure or maintain required insurance and/or an adequately funded self-insurance program will constitute a material breach of the Contract.

Prior to commencement of any work hereunder, you must deliver to BAIFA Certificates of Insurance verifying the aforementioned coverages. Such certificates will make reference to all provisions and endorsements referred to above and will be signed on behalf of the insurer by an authorized representative thereof.

DocuSign Envelope ID: 894511EA-295B-49EB-A393-D26A6837FDD4

The foregoing requirements as to the types and limits of insurance coverage to be maintained by you are not intended to and will not in any manner limit or qualify the liabilities and obligations otherwise assumed by you pursuant hereto, including, but not limited to, liability assumed pursuant to the Indemnification section of the Contract.

By signing below you acknowledge and agree to provide the required certificate of insurance providing verification of the minimum insurance requirements listed above within ten (10) days of BAIFA's notice to firm that it wishes to contract with the firm.

Representative Name and Title	
Name of Authorizing Official	
Authorized Signature	
Date	

NOTE: If you were unable to check "Yes" for any of the required minimum insurance coverages listed above, a request for exception to the appropriate insurance requirement(s) must be brought to BAIFA's attention no later than closing date/time for receipt of requests for modifications/exceptions. If such modifications/exceptions are not brought to BAIFA's attention consistent with the provisions of this IFB, compliance with the insurance requirements will be assumed.

DocuSign Envelope ID: 894511EA-295B-49EB-A393-D26A6837FDD4

PART 6. SPECIAL CONDITIONS

DocuSign Envelope ID: 894511EA-295B-49EB-A393-D26A6837FDD4

SC-1 Indemnification

Consistent with California Civil Code Section 2782 and except where the injury, loss, damage or expense arises from the sole or active negligence or the willful misconduct of BAIFA or the following entities referred herein as "Stakeholder Agencies":

MTC,
BATA,
Caltrans,
BART,
City of Fremont,
City of Milpitas,
City of San Jose,
City of Walnut Creek,
City of Dublin,
City of Oakland, and
California Highway Patrol;

You agree to indemnify and hold BAIFA, Stakeholder Agencies and their commissioners, directors, officers, employees and agents harmless from all claims, demands, suits, losses, damages, injury, and liability, direct or indirect (including any and all costs and expenses in connection therewith), incurred by reason of any act or omission by you, your officers, agents, employees and subcontractors or any of them, under or in connection with this Contract; and you agree at your own cost expense and risk to defend any and all claims, demands, suits, or other legal proceedings brought or instituted against BAIFA, Stakeholder Agencies, or their commissioners, directors, officers, agents, and employees, or any of them arising out of such act or omission, and to pay and satisfy any resulting judgments.

Except as otherwise provided by law, these requirements apply regardless of the existence or degree of fault of BAIFA or the Stakeholder Agencies. Your defense and indemnity obligation will extend to Claims arising after the work is completed and accepted if the Claims are directly related to alleged acts or omissions by you that occurred during the course of the work. Any inspection of the work by BAIFA or the Stakeholder Agencies is not a waiver of full compliance with these requirements.

Your obligation to defend and indemnify is not excused because of your inability to evaluate liability or because you evaluate liability and determine that you are not liable. You must respond within thirty (30) days to the tender of any Claim for defense and indemnity by BAIFA or Stakeholder Agencies, unless this time has been extended by BAIFA. If you fail to accept or reject a tender of defense and indemnity within 30 days, in addition to any other remedy authorized by law, BAIFA may withhold such funds BAIFA reasonably considers necessary for its defense and indemnity until disposition has been made of the Claim or until the Contractor accepts or rejects the tender of defense, whichever occurs first.

With respect to third-party claims against you, you waive all rights of any type to express or implied indemnity against BAIFA, Stakeholder Agencies, its officers, employees, or agents (excluding agents who are design professionals).

DocuSign Envelope ID: 894511EA-295B-49EB-A393-D26A6837FDD4

SC-2 Insurance

2.1 Minimum Coverage

The insurance requirements specified in this section will cover your own liability and the liability arising out of work or services performed under this Contract by any subconsultants, subcontractors, suppliers, temporary workers, independent contractors, leased employees, or any other persons, firms or corporations that you authorize to work under this Agreement (hereinafter referred to as "Agents.") You must, at your own expense, obtain and maintain in effect at all times during the life of this Agreement the following types of insurance against claims, damages and losses due to injuries to persons or damage to property or other losses that may arise in connection with the performance of work under this Agreement.

You are also required to assess the risks associated with work to be performed by Agents under subcontract and to include in every subcontract the requirement that the Agent maintain adequate insurance coverage with appropriate limits and endorsements to cover such risks. To the extent that an Agent does not procure and maintain such insurance coverage, you are responsible for said coverage and assume any and all costs and expenses that may be incurred in securing said coverage or in fulfilling your indemnity obligation as to yourself or any of your Agents in the absence of coverage.

In the event you or your Agents procure excess or umbrella coverage to maintain certain requirements outlined below, these policies will also satisfy all specified endorsements and stipulations, including provisions that your insurance be primary without right of contribution from BAIFA or any Stakeholder Agency. Prior to beginning work under this Contract, you must provide BAIFA with satisfactory evidence of compliance with the insurance requirements of this section.

2.1.1 Workers' Compensation Insurance with Statutory limits, and Employer's Liability Insurance with a limit of not less than $1,000,000 per accident, $1,000,000 per employee for disease, and $1,000,000 policy limit for disease, and any and all other coverage of your employees as may be required by applicable law. (Such policy will contain a Waiver of Subrogation in favor of BAIFA and each Stakeholder Agency. Such Workers Compensation & Employers Liability may be waived, if and only for as long as you are a sole proprietor or a corporation with stock 100% owned by officers with no employees. Should any bridge work require coverage for the United States Longshore Harbor Workers Act, you agree to furnish proof of insurance, if required.

2.1.2 Commercial General Liability Insurance for Bodily Injury and Property Damage liability, covering operations of you and your officers, agents, and employees and with limits of liability which will not be less than $1,000,000 combined single limit per occurrence with a general aggregate liability of not less than $2,000,000, and Personal and Advertising injury liability with a limit of not less than $1,000,000. Such policy will contain a Waiver of Subrogation in favor of BAIFA and each Stakeholder Agency. BAIFA, Stakeholder Agencies, and their commissioners, directors, officers, representatives, agents and employees are to be named as additional insureds. Such insurance will be primary and contain a Separation of

DocuSign Envelope ID: 894511EA-295B-49EB-A393-D26A6837FDD4

Insureds clause as respects any claims, losses or liability arising directly or indirectly from your operations.

2.1.3 Business Automobile Liability Insurance for all automobiles owned (if any), used or maintained by you and your officers, agents and employees, including but not limited to owned (if any), leased (if any), non-owned and hired automobiles. Limits of liability which will not be less than $1,000,000 combined single limit per accident for Bodily Injury and Property Damage.

2.1.4 Umbrella insurance in the amount of $4,000,000 providing excess limits over Employers Liability, Automobile Liability and Commercial General Liability insurance. Such umbrella coverage will be following form to underlying coverage including all endorsements and additional insured requirements.

2.1.5 Property Insurance covering your own Business Personal Property and Equipment to be used in the performance of this agreement, materials or property to be purchased and/or installed on behalf of BAIFA (if any), and builders risk for property in the course of construction (if applicable). You are responsible for all loss or damage, howsoever caused, to the work and materials, until final Acceptance by BAIFA. In addition, the insurance should include "in transit" coverage to the final agreed upon destination of delivery, and including loading and unloading operations, and such coverage will be in force until the work and materials are accepted by BAIFA.

Coverage will be written on a "Special Form" policy that includes theft, but excludes earthquake, with limits at least equal to the replacement cost of the property. Such policy will contain a Waiver of Subrogation in favor of BAIFA and each Stakeholder Agency.

2.1.6 Errors and Omissions Professional Liability Insurance for errors and omissions and the resulting damages, including, but not limited to, economic loss to BAIFA and each Stakeholder Agency and having minimum limits of $1,000,000 per claim. Such policy will contain cyber risk coverages including network and internet security liability coverage, privacy liability coverage and media coverage. The policy will provide coverage for all work performed by you and any work performed or conducted by any subcontractor/consultant working for or performing services on your behalf. No Contract or agreement between you and any subcontractor/consultant will relieve you of the responsibility for providing this Errors & Omissions or Professional Liability coverage for all work performed by you and any subcontractor /consultant working on your behalf on the project.

2.2 Deductibles

You are responsible for payment of any deductible or retention on your policies without right of contribution from BAIFA or any Stakeholder Agency. Deductible and retention provisions will not contain any restrictions as to how or by whom the deductible or retention is paid. Any deductible or retention provision limiting payment to the Named Insured is unacceptable.

DocuSign Envelope ID: 894511EA-295B-49EB-A393-D26A6837FDD4

In the event that BAIFA or any Stakeholder Agency seeks coverage as an additional insured under any Bidder insurance policy that contains a deductible or self-insured retention, you must satisfy such deductible or self-insured retention to the extent of loss covered by such policy, for any lawsuit arising from or connected with any alleged act by you, subconsultant, subcontractor, or any of your employees, officers or directors, even if you or subconsultant is not a named defendant in the lawsuit.

2.3 Failure to Maintain Insurance

All insurance specified above will remain in force until all work or services to be performed are satisfactorily completed, all of your personnel, subcontractors, and equipment have been removed from Owner's Property, and the work or services have been formally accepted. You must notify BAIFA if any of the above required coverages are non-renewed or cancelled. The failure to procure or maintain required insurance and/or an adequately funded self-insurance program will constitute a material breach of this Agreement.

2.4 Self-Insurance

Your obligation hereunder may be satisfied in whole or in part by adequately funded self-insurance, upon evidence of financial capacity satisfactory to BAIFA.

2.5 Claims Made Coverage

If any insurance specified above will be provided on a claim-made (rather than an "occurrence') basis, then in addition to coverage requirements above, such policy must:

2.5.1 Ensure that the Retroactive Date is shown on the policy, and such date must be before the date of this Agreement or the beginning of any work under this Agreement;

2.5.2 Maintain and provide evidence of similar insurance for at least three (3) years following project completion, including the requirement of adding all additional insureds; and

2.5.3 If insurance is cancelled or non-renewed, and not replaced with another claims-made policy form with a Retroactive Date prior to the Agreement effective date, you must purchase "extended reporting" coverage for a minimum of three (3) years after completion of the work.

2.6 Certificates of Insurance

Prior to commencement of any work hereunder, you must deliver to BAIFA Certificates of Insurance verifying the aforementioned coverages. Such certificates will make reference to all provisions and endorsements referred to above and will be signed on behalf of the insurer by an authorized representative thereof.

DocuSign Envelope ID: 894511EA-295B-49EB-A393-D26A6837FDD4

2.7 Disclaimer

The foregoing requirements as to the types and limits of insurance coverage to be maintained by you are not intended to and will not in any manner limit or qualify the liabilities and obligations otherwise assumed by you pursuant hereto, including, but not limited to, liability assumed pursuant to Section 7-1.05, Indemnification, of the Standard Specifications.

2.8 Acceptable Insurers

All policies will be issued by insurers acceptable to BAIFA, generally with a Best's Rating of A-VII or better.

SC-3 Contract Bonds

Prior to execution of the Contract, you will file with BAIFA, consistent with the forms provided herein, two surety bonds in the amounts and for the purposes noted below, duly executed by a reputable surety company satisfactory to BAIFA; *provided, however,* that no bonds are required on contracts of $25,000 or less. Pay all premiums and costs relating to required bonds, whether direct or incidental thereto. Both you and surety will sign each bond.

3.1 Payment Bond

The Payment Bond will be in an amount of 100% of the Total Contract Price, Segment I and Segment II, and will inure to the benefit of persons performing labor or furnishing materials in connection with the work of the proposed Contract. This bond will be maintained in full force and effect until all work under the Contract is completed and accepted by BAIFA, and until all claims for materials and labor have been paid.

3.2 Performance Bond

The Performance Bond will be in an amount of 100% of the Total Contract Price, Segment I and Segment II, and will insure the faithful performance by you for all work under the Contract. It will also insure the replacing of, or making acceptable, any defective materials or faulty workmanship. Upon acceptance of Segment I, the Performance Bond will be reduced by the Segment I Contract amount. Similarly, the bond will be further reduced by the Contract amount of Segment II, upon acceptance of Segment II.

3.3 Surety Requirements

Sureties for necessary bonds (including Bid Bond, Performance Bond and Payment Bond) will be executed by an admitted surety(ies) insurer acceptable to BAIFA with a Best Guide Rating of A-VII or better and authorized to execute such in the State of California.

Should any surety or sureties be deemed unsatisfactory at any time by BAIFA notice will be given to that effect, and you will forthwith substitute a new surety or sureties satisfactory to BAIFA, within thirty (30) days, at your expense; *provided, however,* that the time set out in the Notice of Award for submitting bonds will not be extended thereby. No further payment will be

DocuSign Envelope ID: 894511EA-295B-49EB-A393-D26A6837FDD4

deemed due or will be made under the Contract until the new sureties qualify and are accepted by BAIFA.

All alterations, time extensions, extra and additional work, and other changes authorized by the Specifications, or any part of the Contract, may be made without securing consent of the surety or sureties on the Contract bonds.

SC-4 Time for Performance

The time of completion for all work (including both the civil construction and the logical implementation) will not be more than **156 working days for Segment I, and 268 working days for Segment II,** commencing on the **sixth (6) calendar day** following issuance of the Notice of Award for Segment I by BAIFA, and immediately following issuance of the Notice to Proceed for Segment II. An additional period of maintenance following construction and implementation, 18 months for Segment I, and 12 months for Segment II, with owner option to extend until completion of Segment II O&M, applies.

Should you fail to maintain the progress of the work in conformance with **SC-23 Progress Schedule,** additional shifts will be required to the extent necessary to ensure that the progress conforms to the above mentioned schedule and that the work will be completed within the time limit specified.

Payment for complying with the requirements in this section is included in the payment for the bid items involved.

SC-5 Beginning of Work, Time of Completion, and Liquidated Damages

Time of Completion and accessed Liquated Damages will be in accordance with Section 8-1.10A and **Part 10, Construction Details in Section 8-1.10B.**

Segment I

The First Notice to Proceed (1) for Segment I is anticipated to be issued in August 2015.

Please see Part 10, “Add to section 8-1.10B”, for preliminary Segment I project schedule. The schedule is provided for reference only and is subject to change.

Refer to SC-51 for submittals required prior to issuance of NTP.

DocuSign Envelope ID: 894511EA-295B-49EB-A393-D26A6837FDD4

Table 1: Segment I - I-680 Backhaul Communications System NTP Schedule			
#	**NTP**	**Major Work Activities**	**Preceding Activity**
1	NTP 1 - Installation and Operation Planning	Project Management Plan Package Submittal	Executed contract
2	NTP 2 - Civil Construction	Installation, Implementation and Integration Plan Package	Project Management Plan Package Accepted
		Fiber cable, conduit, cabinet foundation Work, pull box and vaults Installation.	
		OTDR Testing	
		PG&E electrical service connections	
		Site Turnover for OFIT	
		Network Hardware Procurement, Configuration and Testing	
		Corridor Installation, Testing and Certification	
3	NTP 3 – Network Hardware Installation	Acceptance of All Completed Work, O&M Manuals and Training	Acceptance of corridor installation, testing, and certification
4	NTP 4 – Network Testing and Training	Ongoing Systems Operations and Transitional Maintenance	Acceptance of network

Segment II

The Notice to Proceed for Segment II is anticipated to be issued between November 2015 and February 2016. You are cautioned not to expend resources or perform any work relative to Segment II until receipt of Notice to Proceed.

Details on durations for work on Segment II will be provided at a later date.

Operations and Maintenance – Segment I and II:

DocuSign Envelope ID: 894511EA-295B-49EB-A393-D26A6837FDD4

Segment I Operations and Maintenance will commence upon Segment I system acceptance. Segment II Operations and Maintenance will commence upon Segment II system acceptance. Operations and Maintenance will be completed in accordance with the **Part 10, Construction Details** and will include all materials, hardware and software furnished by the Contractor.

SC-6 Contract Data Requirements

Submit to BAIFA the items shown on the Contract Data Requirement List and the Technical Submittals List (both appearing in this **Part 6, Special Conditions**) in compliance with the times and in the number of copies specified therein. Requirements and procedures for preparing and transmitting items shown on the Technical Submittals List will conform to the following:

6.1 Drawings

Prepare working and shop drawings as required by BAIFA for the performance of the work. Drawings will be prepared on a reproducible sheet measuring 11 inches x 17 inches, unless otherwise approved. Each drawing will have a blank area 2.5 inches x 2.5 inches minimum, located above the title block, for the acceptance stamp. The title block will display the following:

1. Contract number and name
2. District and County
3. Number and title of drawing
4. Date of drawing or revision
5. Name of the Contractor and Subcontractor originating drawing
6. Clear identification of contents and location of work
7. Structure name and number, if any
8. Structural calculations signed and sealed by a California licensed civil Engineer**,** where applicable.

6.2 Detail Drawings

Furnish detail drawings for temporary work and method of proposed construction for the safe and successful completion of the work.

6.3 Submittal

Cover Letter Submittals will be accompanied by a “Submittal Cover Letter” form neatly and properly filled out. Forms will be furnished by BAIFA.

6.4 Copies of Drawings

Submit two (2) reproducible and six (6) legible copies of complete and detailed working and shop drawings, which will be suitable for microfilming, to BAIFA. Such drawings will include but not be limited to:

DocuSign Envelope ID: 894511EA-295B-49EB-A393-D26A6837FDD4

1. Fabrication and erection drawings, schedule drawings and manufacturer's scale drawings. If requested by BAIFA, Furnish calculations and information substantiating the details shown on the drawings satisfactory to BAIFA.
2. Plans for temporary structures, and for such other work as may be required for construction, which does not become an integral part of the completed project. Submit two copies of the calculations and other information needed to describe in detail the temporary structures or systems and their intended use.

All submittals for electrical equipment will conform to the provisions of the Contract. All electrical materials will be tagged in conformance with the provisions of Section 6 (Control of Materials) of the Standard Specifications, before delivery to the work site. Untagged electrical materials will be rejected.

6.5 Time for Submittal

Submit drawings and schedules sufficiently in advance of construction requirements as indicated in SC-51. Submit six hard copies and one electronic copy of supporting data such as manufacturer's literature for all items.

The approval of drawings and schedules will be general and will not be construed as:

1. Permitting any departure from Contract requirements;
2. Offering relief from the responsibility for any errors, or omissions including details, dimensions, and materials;
3. Approving departures from details furnished by the Engineer, except as otherwise provided in **Part 10, Construction Details**.

6.6 Variations

If drawings show variations from Contract requirements because of standard shop practice or for any other reason, such variations will be described in the letter of submittal.

1. BAIFA may approve or reject any or all variations.
2. If variations result in an adjustment to the Contract price or time for performance, the adjustment will be subject to approval by BAIFA.
3. Failure to describe variations will not relieve you from the responsibility of executing the work in accordance with the Contract, even though such drawings have been approved.

6.7 Corrections

If corrections to the drawings are required, each print will be marked "MAKE CORRECTIONS NOTED" or "AMEND AND RESUBMIT" and the required corrections will be explained. One print and one reproducible copy will be returned for correction.

6.8 Re-submittals

Re-submittals will be handled in the same manner as first submittals, and the same review time will apply.

DocuSign Envelope ID: 894511EA-295B-49EB-A393-D26A6837FDD4

1. Specific attention will be directed to revisions other than those requested by BAIFA on previous submittals by an accompanying letter or on the resubmitted drawings.
2. If any corrections shown on the drawings constitute a change of Contract requirements, BAIFA will be notified, as previously specified.

6.9 Acceptance

If accepted by BAIFA, each copy of the drawing will be stamped and dated indicating acceptance. One print and one reproducible copy will be returned.

6.10 Changes

When working and shop drawings have been completed to the satisfaction of BAIFA, the construction will be carried out in accordance with such drawings, and no changes will be made thereon except upon written direction from the Engineer.

During execution of the work, use only drawings that are either stamped "MAKE CORRECTION NOTED" or "NO EXCEPTIONS TAKEN" and bear BAIFA's signature.

6.11 Damages

You are responsible for, and bear all cost of, damages that may result from ordering material or from proceeding with work before approval by BAIFA.

6.12 Samples

Furnish samples as specified and requested by BAIFA as soon as possible after request. Unless otherwise indicated, not less than two identical samples of each type required will be submitted.

Shipping charges on samples will be prepaid by you. Products for which samples are requested will not be used until approved in writing by BAIFA. Each sample will be labeled to indicate:

1. Name of project and Contract number
2. Name of the Contractor and Subcontractor or Supplier, if applicable
3. Material or equipment represented
4. Source
5. Name of producer and brand (if any)
6. References to the parts of **Part 10, Construction Details,** which are applicable to the sample
7. Location of work

Certain samples may be tested by BAIFA. Approved samples not destroyed in testing may be retained by BAIFA. Samples not approved will be returned at your expense, if so requested at the time of submittal.

DocuSign Envelope ID: 894511EA-295B-49EB-A393-D26A6837FDD4

6.13 Shipment Letter

A letter will be mailed under separate cover submitting each shipment of samples and detailing the information required in the preceding paragraph. A copy of the letter will be enclosed with the shipment.

6.14 Test Results

Documents such as certificates, reports, and test results specified in **Part 10, Construction Details,** will be submitted to BAIFA.

Three copies of each required will be submitted, unless specified otherwise.

Notice of completion of work to hold points specified in the encroachment permit must be given to BAIFA fourteen (14) calendar days before estimated completion of that work.

6.15 Payment

You will receive no separate payment from BAIFA for complying with the above requirements and are presumed to have allocated such costs to bid price.

SC-7 Permits and Fees

Secure a copy of BAIFA acquired permits from BAIFA and comply with said permits requirements. Pay all charges required to comply with the conditions outlined in the permits.

Refer to **Part 7**, GC-5, for project permits.

Apply for all jurisdictional permits required to perform the work and include the cost of the required permits in the bid price.

Caltrans Permit – Obtain a copy of the Caltrans encroachment permit issued to the Bay Area Infrastructure Financing Authority and comply with all provisions of said permit.

Apply for Caltrans' construction encroachment permit within two (2) working days after the Notice of Award. This permit will be a rider off of the existing BAIFA permit. The obtained Caltrans' construction encroachment permit will require, but is not limited to, the following provisions:

1. Proof of payment and performance surety bonds.
2. Permit fee may be waived by Caltrans.
3. **Other conditions as stipulated in said permit to be issued by Caltrans to BAIFA.**

City of Walnut Creek Permit

Apply for City of Walnut Creek's construction encroachment permit in your name within two (2) working days after the Notice of Award. You are responsible for preparing all necessary documents and all fees associated with getting the permit.

DocuSign Envelope ID: 894511EA-295B-49EB-A393-D26A6837FDD4

City of Oakland Permit

Apply for City of Oakland's construction encroachment permit in your name within two (2) working days after the Notice of Award. You are responsible for preparing all necessary documents and all fees associated with getting the permit.

BART Permit – Apply as needed. Payment for complying with the requirements in SC-7 is included in the payment for the bid items involved.

SC-8 Reserved

SC-9 Reserved

SC-10 Reserved

SC-11 Reserved

SC-12 Reserved

SC-13 Worker's Safety Provisions

Supply personal protective equipment, training, and washing facilities required by your lead compliance plan for five (5) BAIFA employees.

13.1

You are responsible for initiating, maintaining and supervising all safety precautions and programs in connection with the Work. To that end you will: (1) No later than ten (10) days after receipt of the Notice of Award, submit for review your Injury Prevention Program (IPP), which will be site and task specific, and will comply with California Labor Code Section 6401.7. You are responsible for overseeing compliance of their Subcontractors IPP, upon request, the Subcontractors IPP may be reviewed by BAIFA; and (2) No later than ten (10) days after receipt of Notice of Award, submit the resume of the full time, qualified Safety Representative(s) who reports directly to the your Project Manager or Superintendent, and allocates 100% of their time to safety oversight for field operations on the above mentioned project. Your Safety Representative(s) will have a minimum of five (5) years heavy construction experience in administering safety programs on construction job sites, the last two of which have been administering safety in the construction discipline for which you are contracting with Owner. Your Safety Representatives(s) will be onsite during all operational hours. The full time Safety Representative(s) will set up, carry forward and aggressively and effectively maintain the aforementioned Safety Program covering all Segments of the Work. If at any time you wish to replace their Safety Representative(s), provide written notice thirty (30) days prior to change of personnel to BAIFA. Take all precautions and follow all procedures for the safety of,

DocuSign Envelope ID: 894511EA-295B-49EB-A393-D26A6837FDD4

and provide all protection to prevent injury to, all persons involved in any way in the Work and all other persons, including, without limitation, the employees, agents, guests, visitors, invitees and licensees of BAIFA who may be involved. These precautions will include, but in no event be limited to the provisions of BAIFA's IPP. This requirement applies continuously and is not limited to normal working hours.

13.2

Use or storage of explosives is prohibited.

13.3

Open fires on the Project Site are not permitted.

13.4

Forward the Emergency Action Plan to BAIFA no later than ten (10) days following award.

13.5

No later than five (5) working days prior to the arrival of a crane, provide the most recent annual and quadrennial certificates. Also provide crane operator certificates from the National Commission for the Certifying of Crane Operators (NCCCO), as outlined in IPP**,** no later than five (5) working days prior to a crane operator working onsite.

13.6

Job Hazard Analysis will be forwarded to BAIFA no later than five (5) working days prior to operation being performed. All accident investigations will be forwarded to BAIFA no later than five (5) working days following an accident.

13.7 Emergencies

In any emergency affecting the safety of persons or property, or in the event of a claimed violation of any Federal or State safety or health law or regulation, arising out of or in any way connected with the Work or its performance, ensure that at least one of your employees with authority be on duty during working hours, and act immediately to prevent threatened damage, injury or loss or to remedy said violation, whichever is applicable, failing which BAIFA may immediately take whatever action it deems necessary, including, but not limited to, suspending the Work as provided in **Part 7**, GC-69. Also establish and maintain adequate First Aid facilities at locations close to work areas, and mark such locations with signs of adequate size and composition. Also ensure that at least one CPR/ first aid trained employee for every fifteen (15) employees onsite. At no time will less than two (2) CPR/first aid trained employees be onsite during operational hours. Forward training records or certificates for initial and renewal CPR/ first aid training to BAIFA no later than ten (10) days following notice of award.

SC-14 Hazardous Materials

DocuSign Envelope ID: 894511EA-295B-49EB-A393-D26A6837FDD4

Submit Material Safety Data Sheets (MSDS) for all hazardous materials being brought onto the project site, including but not limited to: asphalts, solvents, adhesives, epoxy resins, roofing sealants and bonding agents.

SC-15 Construction Water Conservation

Whenever possible and not in conflict with other requirements of the Contract, minimize the use of water during construction of the project. Watering equipment will be kept in good working order; water leaks will be repaired promptly; and washing of equipment, except when necessary for safety or for the protection of equipment, will be discouraged. All water used for construction purposes such as dust control, compaction, cleaning streets, etc., may be reclaimed water.

SC-16 Reserved

SC-17 Reserved

SC-18 Reserved

SC-19 Final Pay Quantities

When portions of an item have been designated on the plans or in the Schedule of Quantities and Prices of the Contract bid form as final pay quantities, portions so designated will be measured and paid for in accordance with the provisions of **Part 7**, **GC-59, Invoicing and Progress Payments.**

SC-20 Reserved

SC-21 Reserved

SC-22 Project Close-Out Requirements - Record Drawings/Network and System Administration Records

During the project, keep a master set of drawings updated, noting any variation of the Work. Upon completion of the Work, produce a master "Record" set of plans by neatly transferring all such noted variations to blueprint copies of the same drawings, and will deliver same to the Engineer for signed receipt, certification, and certification.

- During the project, securely maintain a record of all Backhaul Network administration data, in accordance with **Part 7**, **GC-13, Confidential Information**, including identification and authentication information such as local and centralized usernames, passwords, VPN encryption settings, and encryption keys. For each instance of network system administration data, include access control information which describes the user(s), role(s), justification for access, time period for which access was authorized and status of the user (i.e.

DocuSign Envelope ID: 894511EA-295B-49EB-A393-D26A6837FDD4

employed, terminated, no longer on project, etc…). Upon final completion and acceptance of each Segment I and Segment II, produce an organized master "Record" set in a hardcopy, tabulated, and human readable printed format and an electronic copy of the same on one (1) CD/DVD and deliver same to the Engineer for signed receipt and certification. Immediately after the warranty period for Segment I and Segment II has expired, including any executed extended warranty options, a final and updated network and system administration records must be delivered to BAIFA in hardcopy and electronic copy, the contractor database purged, physical hardcopies destroyed, and adequate proof of purge and destruction provided to BAIFA for BAIFA inspection and acceptance, including:

- Data destruction policy and procedures,
- Audit trail including logs and system administration records showing the chain of custody of BAIFA specific data and Contractor remote access configurations (i.e. IPSEC VPN configurations and passwords on firewalls used to access BAIFA Backhaul) before, during and after removal and destruction,
- Signed Certificate of data destruction.

Payment for complying with the requirements in **SC-22, Project Close-Out Requirements - Record Drawings/Network and System Administration Records**, is included in the payment for the bid items involved.

SC-23 Progress Schedule

23.1 General Requirements

Scheduling of work under this Contract will be performed by you in accordance with this **SC-23, Progress Schedule**. Development of the schedule and project status reporting requirements will employ computerized Critical Path Method (CPM) scheduling.

All schedules prepared must meet the requirements for access, sequencing, construction staging, delivery of Owner furnished materials, Contract milestone and completion dates.

The approved baseline schedule, including the most recent accepted update (the Current CPM Schedule), will be the basis for evaluating job progress and time extension requests. Responsibility for developing the schedule and monitoring actual progress, as compared to the approved baseline schedule, rests with you.

Inaccuracy of the schedule or failure of the schedule to include any element of the work will not relieve you from responsibility for accomplishing the work.

23.2 Specific Requirements

DocuSign Envelope ID: 894511EA-295B-49EB-A393-D26A6837FDD4

23.2.1 Software: Prepare all schedules using the latest version of SureTrak or Primavera P6 Professional Project Management software. However, other computerized scheduling programs may be allowed by BAIFA, and will be considered on a case-by-case basis. Use of other scheduling software must be requested and approved in writing, prior to submission of any schedules.

23.2.2 General Submittal Requirements: Submit three (3) copies of each submittal item and an electronic copy on compact disk for all schedule submittals, including but not limited to baseline CPM schedule, CPM schedule update, schedule revisions, recovery schedule, Time Impact Evaluation, and mitigation plan. Unless otherwise specified in this **SC-23**, procedures for the submission, review and acceptance of all schedule submittals will be per **SC-6, Contract Data Requirements**.

23.3 Schedule Float

23.3.1 Total Float: The amount of time between an activity's early and late start dates, or between its early and late finish dates in the CPM schedule. A baseline CPM schedule with negative float will not be accepted.

23.3.2 Float Ownership: Neither BAIFA nor you own the float; the Project owns the float. As such, float is considered an expiring resource available to both parties on a non-discriminatory basis.

23.3.3 Early Completion Schedule: Should you submit a baseline schedule that shows completion dates earlier than the Contract dates specified in **Part 6, SC-4 and SC-10**, **BAIFA**, upon acceptance of the schedule, and at its discretion, may adjust by change order the Contract dates consistent with the early completion milestone dates in your baseline schedule. No additional compensation will be provided to you for such adjustments to the Contract milestones. In the event that BAIFA elects to not adjust the milestones, the amount of time between the Contract milestone date and the early finish date of such milestone will be considered project float and is subject to the provisions contained in this Special Condition. Impact to the early completion date caused by BAIFA will not be considered as a basis for a time extension or entitlement to extended overhead compensation unless all available float has expired.

23.4 Baseline CPM Schedule

23.4.1 Submittal: Prepare and submit for acceptance by BAIFA, a detailed CPM Schedule within six (6) calendar days after Notice of Award. The schedule will present an orderly and realistic plan for completion of the work, in conformance with all Contract requirements. The data date of the baseline CPM schedule will be the date of Notice of Award.

BAIFA's review and comments on the schedule will be limited to Contract compliance. If the schedule is rejected (marked "amend and resubmit"), resubmit the Schedule within **five (5) calendar days** after receipt of rejection notice. Make corrections to the schedule necessary to comply with Contract requirements and revise the schedule to address and incorporate all review comments from the review of the baseline CPM schedule. Provide a line-by-line response to all comments from the review of the baseline CPM schedule.

DocuSign Envelope ID: 894511EA-295B-49EB-A393-D26A6837FDD4

23.4.2 Detailed Requirements: Have sufficient number of activities to assure adequate planning of the project and to permit monitoring and evaluation of progress and the analysis of time impacts. Depict how you plan to complete the work involved and show all activities that defines the critical path. The baseline CPM schedule must be time scaled and comply with the following requirements:

1. All activities in the schedule, with the exception of the first and last activities, will have a minimum of one predecessor and a minimum of one successor.
2. No activity in the schedule has duration greater than fifteen (15) working days, with the exception of submittal, approval, fabrication and procurement activities, unless otherwise approved by BAIFA. Activity durations are the total number of actual working days required to perform an activity.
3. Durations for all schedule activities that are sensitive to weather and susceptible to weather delays must be developed so as to allow for the anticipated lost working days per month.
4. Procurement of each major item or type of material or equipment, from submittal, approval, placement of the order through receipt and inspection at the job site, will be identified as a separate activity.
5. Receipt of Owner Furnished Materials and equipment, if any, will be identified as separate activities.
6. Dependencies (or relationships) between activities will be shown.
7. Activities for BAIFA review and acceptance of submittals and shop drawings for all Contract-required material and equipment will be shown. Activities that are dependent on submittal acceptance or material delivery will not be scheduled to start earlier than expected acceptance or delivery dates. You are responsible for all impacts resulting from resubmittal of shop drawings and other items.
8. Time will be included for testing, BAIFA testing, training of BAIFA personnel, delivery of spare parts, submittal of operating and maintenance manuals, developing punch lists, completing punch list items, and clean-up of the work included in any completion milestone or Contract completion.
9. The interface with the work of other Contractors and agencies such as, but not limited to, utility companies, must be indicated.
10. Detailed subcontractor's work activities will be shown. As determined by BAIFA, submit, on subcontractor letterhead, a statement certifying that the subcontractor concurs with your incorporation into the baseline CPM schedule of the subcontractor's related schedules, including activity duration’s, and resource loading.
11. The schedule will be accompanied by a list of anticipated non-work days and holidays, but will exclude weekends from this list. This list will be consistent with the non-workdays and holidays identified in your baseline CPM schedule.

23.4.3 Baseline CPM Schedule Narrative: A baseline CPM schedule narrative will be submitted. This narrative will describe the basis, assumptions, planned sequence of work operations, production rates, equipment, resources, constraints, etc., used to develop the baseline CPM schedule.

DocuSign Envelope ID: 894511EA-295B-49EB-A393-D26A6837FDD4

23.4.4 Acceptance of the Baseline CPM Schedule: When the schedule is accepted, it will be considered as the "Approved Baseline CPM Schedule" which will then be updated to reflect the current status of the work. The Approved Baseline CPM Schedule will be the basis of measuring the progress of the project. Such acceptance will be based solely upon the schedule's compliance with the Contract requirements.

Acceptance of the schedule by BAIFA will not relieve you of the responsibility for scheduling, sequencing, coordination and prosecuting the work to comply with the requirements of the Contract.

BAIFA reserves the right to require that you modify, adjust, add to, or clarify any portion of the schedule which may later be discovered to be insufficient or inaccurate for planning, monitoring, or prosecuting the work. No additional compensation will be provided for such modifications, adjustments, additions, or clarifications.

Submittal of the baseline CPM schedule and subsequent schedule updates, will be understood to be your representation that the submitted schedule meets all of the requirements of the Contract and that work will be executed in the sequence, durations, and methods indicated on the submitted schedule.

23.5 CPM Schedule Update

Following acceptance of the baseline CPM schedule, monitor progress of work and formally update the schedule monthly, effective the last Friday of each month, to reflect actual progress, any anticipated changes to planned activities, and corrections to out-of-sequence logic.

Each update will show all work activities including those already completed. These completed activities will accurately reflect "as-built" information by indicating when activities were actually started and completed, logic revisions, or activity resequencing.

The accepted updated schedule will be considered the Current CPM Schedule.

Neither updating, changing or revising any report, schedule or narrative submitted to BAIFA by you under this Contract, nor BAIFA's review or acceptance of any such report, schedule or narrative will have the effect of amending or modifying, in any way, the Contract completion date or milestone dates or of modifying or limiting, in any way, your obligations under this Contract.

The CPM schedule update, statused through the last Friday of each month, will be submitted within seven (7) calendar days following that status date. If BAIFA so requires prior to a given month's update, it may meet with you and your scheduler to review and agree upon the progress of schedule activities and proposed logic revisions for the given month. This meeting will be conducted within seven (7) calendar days in advance of the last Friday of the month. This meeting, if required, will be referred to as the Monthly Schedule Review Meeting.

BAIFA will, within seven (7) calendar days after receipt of the updated CPM Schedule, either accept, accept with comments, or reject ("amend and resubmit") the submittal.

DocuSign Envelope ID: 894511EA-295B-49EB-A393-D26A6837FDD4

1. If accepted, no additional action is required for that period's submittal.
2. If accepted with comments, those comments must be incorporated into the next period's schedule update. Failure to incorporate the comments into the subsequent schedule update will be cause for rejection of the subsequent update.
3. If rejected, you will have seven (7) calendar days to incorporate BAIFA's comments and resubmit the schedule update for BAIFA's review. Provide a line-by-line response to all comments from BAIFA's review of the CPM schedule update. Only one (1) schedule resubmittal per month will be accepted by BAIFA. Failure to achieve an accepted schedule update for any given month will result in the forfeiture of payment for that associated progress payment period's installment of the schedule pay item (see **SC-23.15, Payment Provisions**).

23.6 Schedule Reports

The following reports for all schedules will be submitted to BAIFA:

1. Schedule logic report listing activities, their early, late and actual start and finish dates, duration, float, responsibility code and the predecessor and successor relationship of activities sorted by early start.
2. Schedule plots presenting time scaled network diagram showing activities and their relationships.

23.7 Contract Status Report

Provide a written narrative of the Contract status report in conjunction with each CPM schedule update which will include:

1. Status of major project components (percent complete, amount of time ahead or behind schedule) and an explanation of how the Project will be brought back on schedule, if delays have occurred.
2. Progress made on critical activities indicated on CPM schedule.
3. Explanations for any lack of work on critical path activities planned to be performed during the previous month.
4. Explanations for any schedule changes, including changes to logic or to activity durations.
5. List of critical activities scheduled to be performed in the next three (3) week period.
6. Status of major material and equipment procurement.
7. Any delays encountered during the reporting period.
8. List of any working days lost due to weather.
9. Any other information pertinent to status of the Contract. Include additional status information requested by BAIFA at no additional cost.

23.8 Weekly Schedule Report

At the weekly progress meeting, provide and present a time scaled three-week look-ahead schedule that contains the actual progress for the previous week and planned activities for the upcoming three weeks. The activities in the three-week look-ahead schedule will be based upon and correlated by activity number of the Current CPM Schedule. The format of the weekly schedule report will be subject to review and acceptance by BAIFA. The weekly schedule report

DocuSign Envelope ID: 894511EA-295B-49EB-A393-D26A6837FDD4

will be prepared using the latest version of SureTrak or Primavera P6 Professional Project Management software. Handwritten schedules will not be accepted by BAIFA. BAIFA may request electronic transmittal of the weekly schedule report, either by electronic mail, or compact disks, at least one day ahead of the weekly progress meeting. The weekly schedule reports submitted during a given month will form part of the basis for the CPM schedule update provided for in **SC-23.5, CPM Schedule Update.**

23.9 Schedule Revisions

Periodic updating of the schedule to reflect actual progress will not be considered a revision to the schedule. Since scheduling is a dynamic process, such modifications of activity durations and sequences are usual and customary occurrences. Occasions may arise, however, whether directed by BAIFA, requested by you, or in reaction to project events, where true revisions to the schedule are required beyond those actions associated with the mere updating of progress.

To reflect revisions to the schedule, provide BAIFA with a written narrative with a description and a reason for each revision. For revisions affecting the sequence of work and activity durations, provide a schedule logic diagram which compares the original sequence and durations to the revised sequence of work and activity durations.

Schedule revisions will not be incorporated into any schedule update until the revisions have been accepted by BAIFA.

BAIFA will review and advise you of BAIFA’s decision concerning schedule revision acceptance. If you disagree with BAIFA's decision, within seven (7) calendar days from receipt of BAIFA's decision, provide a written narrative explaining or clarifying the revision. If BAIFA still does not agree with your revision, BAIFA's decision will govern, and the schedule will be updated in accordance with BAIFA's decision. Failure to respond in writing within seven (7) calendar days will be contractually interpreted as acceptance of BAIFA's decision and you waive your rights to subsequently dispute or file a claim regarding BAIFA's decision.

Upon request by BAIFA, provide the subcontractor certifications for revisions affecting any subcontractors.

23.10 Recovery Schedule

If the CPM schedule update shows a completion date over twenty (20) working days beyond any Contract milestone date, or if specifically directed by BAIFA, within seven (7) calendar days after the submittal of the CPM schedule update, submit to BAIFA your proposed schedule revisions to recover the lost time. As part of this submittal, provide a written narrative for each revision made to recover the lost time. The narrative will explain your proposed methodology, basis and assumptions made in the recovery of lost time. If the revisions include sequence changes, provide a schedule diagram comparing the original sequence to the revised sequence of work. The recovery schedule will be prepared as a modification to the Current CPM Schedule that incorporates proposed revisions to recover lost time.

The proposed revisions in a Recovery Schedule will not be incorporated into any schedule update until they have been accepted by BAIFA.

DocuSign Envelope ID: 894511EA-295B-49EB-A393-D26A6837FDD4

If your revisions are not accepted by BAIFA, follow the procedures in SC-23.9.

Upon request by BAIFA, provide the subcontractor certifications for revisions affecting any Subcontractors.

23.11 Time Impact Evaluation for Change Orders and Other Delays

When you become aware of circumstances considered to be a change to the Contract (including change notices and force account directives), prepare and submit a Time Impact Evaluation (TIE) which includes both a written narrative and a schedule diagram depicting how the changed work affects other schedule activities. The schedule diagram will show how you propose to incorporate the changed work in the current schedule and how it impacts the critical path of the Current CPM Schedule. You are also responsible for requesting time extensions based on the TIE's impact on the critical path. The diagram must be tied to the main sequence of schedule activities to enable BAIFA to evaluate the impact of the changed work to the scheduled critical path. Submit the TIE within fourteen (14) calendar days of recognition of such change.

You are responsible for all costs associated with the preparation of TIE’s, and the process of incorporating them into the current schedule update. Provide BAIFA with three (3) copies of each TIE.

Once accepted by BAIFA, the TIE will be incorporated into the next CPM schedule update. If you and BAIFA are unable to reach agreement, incorporate changes in accordance with BAIFA's direction.

If you do not submit a TIE, for a specific issue, by the stated deadline and in accordance with the requirements of this section, it is mutually agreed that you do not require a time extension for said issue and that you waive any rights to claim a time extension based on said issue in the future.

23.12 Time Extensions

You are solely responsible for requesting a time extension for any change, delay, or disruption that, in your opinion, impacts the critical path of the Current CPM Schedule. Time extension will be granted only to the extent that the change, delay, or disruption that impacts the critical path is beyond the control and without fault or negligence of you or any subcontractor.

You may be entitled to a compensable time extension for Owner-caused delays that are not concurrent with Contractor-caused or other excusable but non-compensable delays (i.e., weather). You may be entitled to a non-compensable time extension for Owner-caused delays that are concurrent with Contractor-caused or other excusable but non-compensable delays.

In the event that an Owner-caused delay impacts a Contract milestone or the Contract completion date, provide a mitigation plan when directed by BAIFA, including a schedule diagram, which explains how the impact can be mitigated. Also include a detailed schedule of values of the labor, equipment and material you would expend to mitigate Owner-caused delay.

DocuSign Envelope ID: 894511EA-295B-49EB-A393-D26A6837FDD4

Submit your mitigation plan to BAIFA within seven (7) calendar days from the date of discovery of said impact. You are responsible for the cost to prepare the mitigation plan.

Failure to request time extension, provide TIE, or provide the required mitigation plan within the time specified in this Special Condition SC-23, will result waiving your right to both the time extension and the recovery of costs associated with mitigating the delay.

BAIFA will not consider any time extension request unless the requirements of this Special Condition SC-23 are met. BAIFA will not be responsible or liable to you for any constructive acceleration due to your failure to comply with the submission requirements and justification requirements of this Contract for time extension requests.

Failure to perform in accordance with the Current CPM Schedule will not be excused by submittal of time extension requests.

23.13 Reserved

23.14 Daily Contractor Construction Report

Submit to BAIFA a daily construction activity report for each working day, including weekends and holidays when work occurred. Each daily construction report will be submitted no later than the day following the workday represented by the report. The following information will be included in the report:

1. Project name and Contract/Project number
2. Contractor's name and address
3. Weather, temperature, and any unusual site conditions
4. Brief description of day's activities (work activities will be referenced by activity number and activity description in the CPM schedule)
5. Labor quantities for Contractor and subcontractors
6. Equipment and other tools utilized by Contractor and subcontractors
7. Unusual occurrences, problems and accidents, if any

23.15 Payment Provisions

In the event that the Contract contains a separate pay item for a "Progress Schedule", that pay item will be administered as follows: 25% of the pay item upon acceptance by BAIFA of an approved baseline schedule as described in SC-23.4 herein. The remainder of the pay item will be invoiced in equal installments by you computed by dividing the remainder of the pay item amount by the number of progress payment periods from BAIFA's acceptance date of the baseline CPM schedule or sixty (60) days from the first charged day, whichever is earlier, through Contract completion. The final installment will be invoiced when final Acceptance of the work occurs. There will be no separate payment provided for all other schedule submittals required in **Part 6, SC-23**, other than for the baseline CPM schedule and the CPM schedule update.

If you fail to submit the baseline CPM schedule within sixty (60) days from Notice of Award, 25% of the pay item for "Progress Schedule" will be forfeited. The pay item for any progress payment period for which you do not have an accepted schedule will not be paid by

DocuSign Envelope ID: 894511EA-295B-49EB-A393-D26A6837FDD4

BAIFA. No payment for a missed period will be made retroactively by BAIFA. Forfeiture of any payments will not relieve you from the responsibility to submit the CPM schedule update and all other requirements of this section including weekly schedule reports, daily Contractor construction reports, time impact evaluations and recovery schedules throughout the term of the Contract.

In addition to the amount retained by BAIFA from each progress payment, as provided for in **Part 7, GC-59**, BAIFA may withhold additional amounts not to exceed 10% of the total progress payment for your failure to meet the requirements of **SC-23**. BAIFA will pay you the amount withheld once BAIFA has determined that you have satisfactorily complied with the requirements of **SC-23.**

SC-24 Reserved

SC-25 Reserved

SC-26 Laboratory

When a reference is made in the specifications to the "Laboratory," the reference will mean Division of Engineering Services - Materials Engineering and Testing Services and Division of Engineering Services - Geotechnical Services of the Department of Transportation, or established laboratories of the various Districts of the Department, or other laboratories authorized by the State to test materials and work involved in the Contract. When a reference is made in the specifications to the "Transportation Laboratory," the reference will mean Caltrans Division of Engineering Services - Materials Engineering and Testing Services and Division of Engineering Services - Geotechnical Services, located at 5900 Folsom Boulevard, Sacramento, CA 95819, Telephone (916) 227-7000.

SC-27 Reserved

SC-28 Reserved

SC-29 Reserved

SC-30 Value Engineering Change Proposals (VECP)

30.1 Acceptance of VECP

BAIFA may accept or reject part or all of any VECP by giving you written notice thereof. Until such notice is issued, you remain obligated to perform in accordance with the terms of the Contract, including the schedule in **Part 6, SC-5**. VECPs will be processed expeditiously; however, BAIFA will not be liable for any delay in acting upon any proposal submitted pursuant to this Article. The decision of BAIFA as to acceptance of any such proposal will be final. The denial of any VECP will not provide you with any basis for claim for damages or delay, nor for release from contractual responsibilities. BAIFA's approval of a value Engineering proposal will not entitle you to additional compensation or time if the work incorporating the proposal is defective, more expensive, or takes more time.

DocuSign Envelope ID: 894511EA-295B-49EB-A393-D26A6837FDD4

30.2 Inclusion in Subcontracts

Include value engineering arrangements in any subcontract which, in your judgment, appears to offer sufficient value Engineering potential.

30.3 Identical VECP

A VECP identical to one submitted under any other Contract, by this or by any other Contractor, may also be submitted under the Contract, provided that the proposal originated with such Contractor and not with BAIFA.

30.4 Restrictions

You may restrict BAIFA's right to use any VECP data by marking it with the following statement:

> "This data, furnished pursuant to the Value Engineering article of the Contract, will not be duplicated, used or disclosed in whole or in part, for any purpose except to evaluate the VECP, unless the proposal is accepted by BAIFA. The restriction does not limit BAIFA's right to use information contained in this data if it is or has been obtained, or is otherwise available, from Contractor or from another source, without limitations. When this proposal is accepted by BAIFA, BAIFA will have the right to duplicate, use and disclose any data in any manner and for any purpose whatsoever, and have others do so whether under this or any Contract."

You have no right to share any future savings derived from incorporation of the VECP in future BAIFA Contracts.

SC-31 Alternative Methods of Construction

Whenever the plans or specifications provide that more than one specified method of construction or more than one specified type of material or construction equipment may be used to perform portions of the work and leave the selection of the method of construction or the type of material or equipment to be used up to you, it is understood that BAIFA does not guarantee that every specified method of construction or type of material or equipment can be used successfully throughout all or any part of any project. Attention is directed to **Part 2, General Description of Work,** of these Contract Documents.

It is your responsibility to select and use the alternative or alternatives, which will satisfactorily perform the work under the conditions encountered.

SC-32 Reserved

DocuSign Envelope ID: 894511EA-295B-49EB-A393-D26A6837FDD4

SC-33 Quality Assurance Program

At your own expense, arrange and submit for BAIFA's approval and implement a Quality Assurance Program consistent with the requirements of the Standard Specifications.

You are required to develop a quality management plan (QMP) covering all aspects of the project. The objective of the QMP is to place the responsibility for the quality of all services and performance related to the design and implementation of the system on the Contractor, to facilitate the Contractor's installation of the Backhaul Network, and to allow BAIFA to fulfill its responsibilities of exercising due diligence in overseeing all areas of the completion of this project.

You will provide BAIFA with access to your internal documentation regarding your quality management process upon request. This will include, but not be limited to:

- Defect reporting
- Configuration management reports
- Reports on quality monitoring of procedures

You will prepare a QMP for BAIFA's review and approval in accordance with SC-51. The QMP will outline the Contractor's internal quality control and quality assurance (QC and QA) procedures during all phases of the project.

Development of Quality Management Plan:

The QMP will ensure that all design documents are prepared in accordance with generally accepted practices for these types of services and the Agreement. Network development, installation, implementation and operation practices for the project will follow the most current vendor instructions, including but not limited to: installation and operations manuals, management and security best practices and reference architectures. Additionally, the QMP will describe specific QC and QA procedures, including all required forms and checklists. QC and QA procedures will be specified for preparing, verifying and checking all products and performance criteria related to this project to ensure that they are independently checked and back-checked in accordance with generally accepted practices for these types of services and the requirements of the Agreement. Additionally, the QMP will describe and include the following:

- For all project deliverable documentation, a description of the level, frequency and method of checking that project requirements have been met.
- Procedures for coordinating project services performed by different individuals in the same area, or in adjacent areas, or individuals performing related tasks, to ensure that conflicts, omissions or misalignments do not occur among design or installation documents or between the drawings and the specifications of any discipline. These procedures will also include the coordination of the review, approval, release, distribution and revision of documents involving such parties.
- A description of procedures to: (1) ensure that Contractor personnel are familiar with all the provisions of the Agreement concerning their respective responsibilities; (2) provide for the education, training and certification, as appropriate, of personnel performing

DocuSign Envelope ID: 894511EA-295B-49EB-A393-D26A6837FDD4

activities affecting or assessing the quality of deliverables to assure that such personnel achieve and maintain reasonable proficiency; and (3) ensure that all Work is performed according to the QMP and generally accepted practices for these types of services and the Agreement.

- Procedures for the documentation of meetings; the filing of design criteria, reports and notes, and supporting materials needed during the final design; and the specific responsibilities of personnel to satisfy these requirements. Documents will be maintained, organized and indexed by the Contractor and electronic and/or paper copies made available to BAIFA upon its request.
- Procedures to control the handling, storage, shipping, cleaning and preservation of materials and equipment to prevent damage or deterioration.
- Procedures to ensure that conditions adverse to quality, such as failures, malfunctions, deficiencies, defective material and equipment, and deviations are promptly identified and corrected. The procedures will ensure that the cause of the condition is determined and corrective action taken to preclude repetition. Within a week of discovery, the Contractor will identify in writing to BAIFA the significant condition adverse to quality, the cause of the condition and the corrective action.
- Measures to control the receipt and issuance of documents, such as instructions, procedures, training manuals and drawings, including changes thereto, which prescribe activities affecting quality. These measures will ensure that approved documents, including authorized changes thereto, are reviewed for adequacy and approved for release by authorized personnel of the Contractor, and are distributed to and used at the location where the prescribed activity is performed. Changes to documents will be reviewed and approved by the same organizations that performed the original review and approval unless BAIFA consents, in writing, to another responsible organization and review structure.
- Procedures and personnel to be used to assure that specified instrumentation is installed and monitored in accordance with applicable specifications.
- Procedures that will be implemented to ensure that all software, Hardware, configuration files and project documentation are tracked, documented and managed in accordance with industry best practices. Your document control system will identify, categorize, track and manage all project plans, manuals and other documents under your control. Your software version control system will identify, categorize, track and manage all software for the Backhaul Network. You will document revisions and track them using a system of version control and change control logs.

Contractor Quality Manager:

You will provide a quality manager (QM) who will be responsible for quality oversight and the detailed review process for all aspects of the project including, but not limited to, network design, installation and documentation. The QM will not be involved with direct scheduling or production activities, and will report directly to BAIFA and your management team. The QM will

DocuSign Envelope ID: 894511EA-295B-49EB-A393-D26A6837FDD4

ensure that the methods and procedures contained in the approved QMP are implemented and followed by your staff. The individual designated as QM will report to and coordinate all issues directly with your project manager and BAIFA.

In addition to the amount retained by BAIFA from each progress payment, as provided for in **Part 7**, GC-59, BAIFA may withhold additional amounts not to exceed 10% of the total progress payment for your failure to meet the requirements of SC-33. BAIFA will pay you the amount withheld once BAIFA has determined that you have satisfactorily complied with the requirements of SC-33**.**

SC-34 Conformity With Contract Documents and Allowable Deviations

Work and materials will conform to the lines, grades, typical cross sections, dimensions and material requirements, including tolerances, shown on the plans or indicated in the specifications. Although measurement, sampling and testing may be considered evidence as to conformity, the Engineer will be the sole judge as to whether the work or materials deviate from the plans and specifications, and the Engineer's decision as to any allowable deviations there from will be final.

SC-35 Use of Materials Found On the Work Site

Unless designated as selected material as provided in Section 19-2.03D, "Selected Material" of the Standard Specifications, You, with approval, may use in the proposed construction such stone, gravel, sand or other material suitable in the opinion of the Engineer as may be found in excavation. You will be paid for the excavation of those materials at the Contract price for the excavation, but replace at your expense with other suitable material all of that portion of the material so removed and used which was contemplated for use in the work, except that you need not replace, at your expense, any material obtained from structure excavation used as structure backfill. No charge for materials so used will be made against you. Do not excavate or remove any material from within the highway location that is not within the excavation, as indicated by the slope and grade lines, without written authorization.

SC-36 Reserved

SC-37 Reserved

SC-38 Reserved

SC-39 Reserved

SC-40 Reserved

SC-41 Reserved

SC-42 Public Convenience and Safety

DocuSign Envelope ID: 894511EA-295B-49EB-A393-D26A6837FDD4

42.1 Public Convenience

Attention is directed **Part 7, GC-38, Public Convenience and Safety** for provisions relating to the passage of traffic around the work over detours or lane closures.

In the event of a suspension of the work, attention is directed to **Part 7, GC-69, Suspension of Work**.

You may be required to cover certain signs that regulate or direct public traffic to roadways that are not open to traffic. The Engineer will determine which signs will be covered. Except as otherwise provided for construction area signs in Section 12, Temporary Traffic Control, of the Standard Specifications, furnishing, installing and removing covers will be paid for as extra work as provided in **Part 7, GC-65, Change Requests and Change Notices**, and **Part 7**, **GC-66, Change Orders.**

After the surface of the roadbed has been brought to a smooth and even condition for the passage of public traffic as above provided, any work ordered by the Engineer for the accommodation of public traffic prior to commencing subgrade operations will be paid for as extra work as provided in **Part 7, GC-65, Change Requests and Change Notices**, and **Part 7, GC-66, Change Orders.**

Any shaping of shoulders or reshaping of subgrade necessary for the accommodation of public traffic thereon during subgrade preparation and paving operations will be paid for as extra work as provided in **Part 7**, **GC-65, Change Requests and Change Notices**, and **Part 7**, **GC-66, Change Orders**.

When ordered, furnish a pilot car and driver and flaggers for the purpose of expediting the passage of public traffic through the work under one-way controls. , The cost of flaggers furnished for this purpose will be paid for as provided in **SC-43, Flagging**. Except At locations where traffic is being routed through construction under one-way controls and when ordered, the movement of your equipment from one portion of the work to another will be governed in accordance with the one-way controls. The cost of pilot cars and driver, will be paid for as extra work as provided in **Part 7, GC-65, Change Requests and Change Notices**, and **Part 7**, **GC-66, Change Orders**.

In order to expedite the passage of public traffic through or around the work and where ordered, install signs, lights, flares, temporary railing (Type K), barricades and other facilities for the sole convenience and direction of public traffic. Also where directed by the Engineer, furnish competent flaggers whose sole duties will consist of directing the movement of public traffic through or around the work. The cost of furnishing and installing the signs, lights, flares, temporary railing (Type K), barricades, and other facilities, not to be paid for as separate Contract items, will be paid for as extra work as provided in **Part 7**, **GC-65, Change Requests and Change Notices, and Part 7, GC-66, Change Orders**.

SC-43 Reserved

SC-44 Clearing and Grubbing

DocuSign Envelope ID: 894511EA-295B-49EB-A393-D26A6837FDD4

In addition to any requirements which may be included in **Part 7, GC–53, Cleanup**, comply with Section 16, Clearing and Grubbing, of the Standard Specifications and these special conditions.

Clearing and grubbing operations will result in no visible dust. No material containing lead will be deposited on public roads. Indemnify BAIFA and State from any costs due to any discharge of material containing lead.

Activities controlled you, except cleanup or other required work, will be confined within the roadway right of way.

Nothing herein will be construed as relieving you of the responsibility for final cleanup of the highway as provided in **Part 7, GC-53, Cleanup.**

SC-45 Reserved

SC-46 Preservation of Property

Comply with **Part 7, GC-45, Protection and Restoration of Property**.

Damaged or injured plants will be removed and disposed of outside the highway right of way in conformance with the provisions in **Part 7, GC-51, Disposal of Materials**. Replacement planting of injured or damaged trees, shrubs and other plants will be completed not less than 20 working days prior to acceptance of the Contract. Replacement plants will be watered as necessary to maintain the plants in a healthy condition. All landscaping within any project temporary construction easement (TCE) or property of which BAIFA has been granted a permit to enter during the construction period will be left, upon project completion, in a condition equal to or better than the pre-existing construction condition. Landscaping, hardscape, etc. which is damaged will be replaced in these areas at your expense. Prior to the start of any work within a TCE, provide the Engineer with a photo record, with date shown on the photo, of the existing condition prior to construction. Additionally, tour the area with the Engineer, to confirm the condition of the area with the photos. Failure to provide and perform these duties will result in you restoring the TCE to the satisfaction of the Engineer at your expense. The material and work necessary for the preservation of property will be paid under bid items involved.

SC-47 Utilities

Make arrangements to obtain electrical power, water or compressed air or other utilities required for your operations and will make and maintain the necessary service connections at your own expense.

SC-48 Sanitary Facilities

State sanitary facilities will not be available for use by your employees.

SC-49 Reserved

DocuSign Envelope ID: 894511EA-295B-49EB-A393-D26A6837FDD4

SC-50 Reserved

SC-51 Technical Submittals List

In addition to the amount retained by BAIFA from each progress payment, as provided for in **Part 7, GC-59**, BAIFA may withhold additional amounts not to exceed 10% of the total progress payment for your failure to meet the requirements of **SC-51**. BAIFA will pay you the amount withheld once BAIFA has determined that you have satisfactorily complied with the requirements of **SC-51.**

The table below represents only a partial listing of submittal requirements. The table is a reminder of your responsibility to submit submittals in a timely manner.

	ITEM	DUE DATE/ FREQUENCY	COMMENTS
1.	Project Management Plan	NLT **3** working days after NTP	6 copies
2.	Schedule of Owner Furnished Materials	NLT **6** working days after NTP	6 copies
3.	Schedule of Values for Electrical Work	NLT **6** working days after NTP	6 copies
4.	Baseline CPM Schedule	NLT **3** working days after NTP	6 copies
5.	Quality Management Plan	NLT **3** working days after NTP	6 copies
6.	WPCP (Water Pollution Control Plan) or SWPPP (Storm Water Pollution Prevention Plan)	NLT **19** working days following NTP	10 copies
7.	Product Data Sheets	NLT **6** working days following NTP	6 copies
8.	Hardware and Software Implementation Plan	NLT **10** working days after NTP	6 Copies
9.	Network Implementation and Integration Plan	NLT **10** working days after NTP	6 Copies
10.	Network Performance and Security Management Plan	NLT **10** working days after NTP	6 Copies
11.	Preliminary Implementation Design Review Package	NLT **10** working days after NTP	6 Copies
12.	Health and Safety Plan	At least **10** working days prior to beginning work	6 copies
13.	Injury Prevention Plan (IPP)	NLT **10** working days after NOA	6 copies
14.	Site Safety Plan (s)	NLT **10** working days after NOA	6 copies

DocuSign Envelope ID: 894511EA-295B-49EB-A393-D26A6837FDD4

	ITEM	DUE DATE/ FREQUENCY	COMMENTS
15.	Emergency Action Plan	NLT **10** working days after NOA	6 copies
16.	List of First Aid / CPR Trained Employees and Proof of Training	NLT **10** working days after NOA	6 copies
17.	Material Safety Data Sheets (MSDS)	NLT **10** working days after NOA	6 copies
18.	Debris Containment and Collection Program	NLT **10** working days after NOA	6 copies
19.	Schedule of Values	NLT **20** working days following NOA	1 copy
20.	Final Implementation Design Review Package	NLT **40** working days after NTP	6 Copies
21.	Fiber Budget and Loss Calculations	NLT **40** working days after NTP	6 Copies
22.	Material Submittals for Civil Construction	NLT **55** working days after NTP	6 Copies
23.	Logical Network Test Plan and Procedures	NLT **70** working days after NTP	6 Copies
24.	Submittal of All Field Notes and Cut Sheets	NLT **3** weeks in advance of work operation	6 copies
25.	Copies of all Accident Investigations	NLT **5** working days following accident	6 copies
26.	Copies of Annual and Quadrennial Crane Certifications	NLT **5** working days prior to a crane working onsite	6 copies
27.	Job Hazard Analysis	NLT **5** working days prior to operation being performed	6 copies
28.	Aerially Deposited Lead Submittal	At least **15** working days prior to beginning any work in areas containing Aerially Deposited Lead	6 copies
29.	Electrical Utility Shutdowns	At least **15** working days prior notice	6 copies
30.	Monthly CPM Schedule Updates	**5** days in advance of progress payment	3 copies
31.	Disposal – Submit Sampling and Analysis Plan	At least **15** working days prior to beginning sampling or analysis	6 copies
32.	Sampling and Analysis Plan	NLT **15** working days before any sampling or analysis	6 copies
33.	Welding Quality Control Plan	Within **7** working days prior to the performance of any welding	As Required
34.	Shop Drawings	Within ten (10) calendar days of completion of work	

DocuSign Envelope ID: 894511EA-295B-49EB-A393-D26A6837FDD4

	ITEM	DUE DATE/ FREQUENCY	COMMENTS
35.	Logical As-Builts	Within ten (10) working days of BAIFA acceptance of End-to-End Certification testing	6 Copies
36.	Network Training Plan	At least **60** calendar days before start of Training	6 Copies
37.	Written Schedule of Planned Closures	**1** week in advance of any lane closure	6 copies
38.	Amendment to the Closure Schedule	At least **3** days in advance of a planned closure	6 copies
39.	Warranties	Before Final Acceptance	As Required
40.	Operations & Maintenance Manuals	Before Final Acceptance	As Required

DocuSign Envelope ID: 894511EA-295B-49EB-A393-D26A6837FDD4

PART 7. GENERAL CONDITIONS

DocuSign Envelope ID: 894511EA-295B-49EB-A393-D26A6837FDD4

7.1 LEGAL RESPONSIBILITIES AND RELATIONSHIPS

GC-1 Applicable Law and Jurisdiction

This Contract incorporates provisions required by the laws of the State of California and the Federal Government. It is your responsibility to determine the applicability of State and Federal laws, rules and regulations to the work to be performed under this Contract.

This Contract will be governed by California law. Any lawsuit or legal action arising from this Contract will be commenced and prosecuted in the courts of Alameda County, California.

GC-2 Compliance with Laws and Regulations

Keep informed of, comply with, and cause all of your agents, employees, suppliers and subcontractors of any tier, to observe and comply with all applicable Federal, State, and local laws, regulations, and policies, including, but not limited to, all applicable terms and conditions prescribed for third party contracts by the U.S. Department of Transportation (DOT). You will indemnify, defend, and hold harmless the State, BAIFA, the Municipality or other entity within whose jurisdiction or on whose property the work is being performed, and Commissioners, their Board of Supervisors, Board of Directors, Councils, officers, agents, consultants and employees from any claim, liability, loss, injury or damage arising out of, or in connection with, the performance of this Contract by you and/or your agents, employees or subcontractors, excepting only loss, injury or damage caused by the active or sole negligence or willful misconduct of personnel employed by the indemnities.

GC-3 Contractors' Licensing Requirements

Contractors are required by law to be licensed in the State of California and are regulated by the Contractors' State License Board. Any questions related thereto may be referred to the Registrar of the Board whose address is:

Contractors' State License Board
1020 N Street
Sacramento, CA 95814

GC-4 Independent Contractor

You represent that you are fully experienced and properly qualified to perform the class of work provided for herein, and that it is properly licensed, equipped, organized and financed to perform such work. You must act as an independent Contractor and not as the agent or employee of BAIFA in performing the Contract, maintaining complete control over its employees. Nothing contained in this Contract or any subcontract awarded by you will create any contractual relationship between any such subcontractor and BAIFA, and you will perform all work in accordance with its own methods subject to compliance with the Contract.

DocuSign Envelope ID: 894511EA-295B-49EB-A393-D26A6837FDD4

GC-5 Permits, Licenses, Fees and Notices

As specified in **Part 6, Special Conditions**, or as otherwise required by law, before beginning any work which requires a permit or similar authorization, secure and pay for all necessary licenses, fees, bonds, charges, inspections, customs or import duties, permits, and similar authorizations from all governmental authorities required to fulfill the Contract requirements and your obligations.

GC-6 Nondiscrimination

Comply with Section 1735 of the California Labor Code, which reads as follows:

> "No discrimination will be made in the employment of persons upon public works because of race, religious creed, color, national origin, ancestry, physical disability, mental disability, medical condition, marital status, or sex of such persons, except as provided in Section 12940 of the Government Code, and every Contractor for public works violating this section is subject to all the penalties imposed for a violation of this chapter."

In the performance of this Contract, you and your subcontractors will not unlawfully discriminate, harass or allow harassment, against any employee or applicant for employment because of sex, race, color, ancestry, religious creed, national origin, physical disability (including HIV and AIDS), mental disability, medical condition (cancer), marital status, age (over 40), and the denial of family care leave. You and your subcontractors will ensure that the evaluation and treatment of their employees and applicants for employment are free from such discrimination and harassment. You and your subcontractors will comply with the provisions of the Fair Employment and Housing Act (Government Code §12900 *et seq*.) and the applicable regulations promulgated thereunder (California Code of Regulations, Title 2, Section 7285.0 *et seq*.). The applicable regulations of the Fair Employment and Housing Commission implementing Government Code, Section 12290 (a-f), set forth in Chapter 5 of Division 4 of Title 2 of the California Code of Regulations are incorporated into this Contract by reference and made a part hereof as if set forth in full. You and your subcontractors will give written notice of their obligations under this clause to labor organizations with which they have a collective bargaining or other agreement. Include the nondiscrimination and compliance provisions of this clause in all subcontracts to perform work under this Contract. The Contractor and its subcontractors will permit access to all records of employment, employment advertisements, application forms, and other pertinent data and records by the State Fair Employment Practices and Housing Commission, or any other agency of the State of California designated by the State, for the purpose of investigation to ascertain compliance with this clause.

GC-7 Prohibited Interests

No BAIFA Commissioner, officer, or employee will have any direct or indirect interest in this Contract or the proceeds thereof.

DocuSign Envelope ID: 894511EA-295B-49EB-A393-D26A6837FDD4

GC-8 Labor Provisions

8.1 Safety

In addition to your own safety procedures, and any safety procedures required under Federal, state, or local laws or regulations, including compliance with the provisions of the California Occupational Safety and Health Act of 1973 and any additional safety requirements contained in **Part 6, Special Conditions**, implement and enforce all safety requirements that are determined by BAIFA to be applicable to the performance of any Work under this Contract.

8.2 Overtime Requirements

Neither you nor any subcontractor of any tier will require or permit any worker to work in excess of eight (8) hours in any day or in excess of forty (40) hours in any work week (defined as seven (7) sequential calendar days) unless such worker receives compensation at a rate not less than one and one-half times the basic rate of pay for all hours worked in excess of eight hours in any day or in excess of forty (40) hours in such work week, whichever is greater. Failure to comply with the preceding requirements will subject you or any subcontractor of any tier to the penalties specified in Labor Code §1813.

8.3 Prevailing Wage Rates

You and all your subcontractors will comply with applicable sections of the California Labor Code and regulations promulgated thereunder (including without limitation, Sections 1720 *et seq*. and Title 8 of the California Code of Regulations Sections 16000 *et seq*.) governing the payment of prevailing wages, as determined by the Director of the California Department of Industrial Relations, in regards to all work performed under this Contract. In particular, your attention is drawn to Labor Code Sections 1771 (payment of prevailing wage rate), 1775 (penalty for non-payment), 1776 (payroll records), and 1777.5 (use of apprentices). Appendix D, Wage Determinations, is attached hereto and incorporated herein by this reference.

You and all your subcontractors, to the extent the work of such subconsultants under this Contract is subject to California Labor Code Section 1720 *et seq*., will be registered with the Department of Industrial Relations pursuant to Labor Code section 1725.5 and will furnish electronic certified payroll records directly to the Labor Commissioner through the internet portal of the Division of Labor Standards Enforcement.

8.4 Retention of Labor Records

In the performance of the work specified in this Contract, You are responsible for compliance with California Labor Code Section 1776 pertaining to payroll records. You and all of your subcontractors of any tier will maintain all payrolls and basic payroll records during the course of the work and will preserve them for a period of three (3) years from the completion of the Contract. Such records will contain the names of all employees, their address, social security number, correct classifications, hourly rates of wages paid, daily and weekly number of hours worked, deductions made, and actual wages paid. These records will be made available by you or any of your subcontractors of any tier for inspection, copying, or transcription by authorized representatives of BAIFA , and if requested, by the California Department of Industrial Relations,

DocuSign Envelope ID: 894511EA-295B-49EB-A393-D26A6837FDD4

you or any of your subcontractors of any tier will permit such representatives to interview employees during working hours on the job.

8.5 Employment of Apprentices

In the performance of the work specified in this Contract, you are responsible for compliance with California Labor Code Section 1777.5, pertaining to the employment of registered apprentices.

8.6 Subcontracts

Insert in all of your subcontracts the clauses set forth in this **GC-8, Labor Provisions** and also a clause requiring its subcontractors to include these clauses in any lower tier subcontracts. You are responsible for compliance by any subcontractor or lower tier subcontractor with the clauses set forth in this **GC-8, Labor Provisions**. Pursuant to Public Contract Code §6109, you are prohibited from performing work on the Project with a subcontractor who is ineligible to perform work on a public works project pursuant to Sections 1777.1 or 1777.7 of the California Labor Code.

GC-9 Hazardous Materials or Unusual Conditions

In the event underground tanks, vaults, materials or unusual conditions as specified in Public Contract Code §7104(a) are encountered during prosecution of the Work, immediately, and before disturbing such conditions, notify BAIFA in writing of any:

1. Material that you believe may be material that is hazardous waste as defined in Section 25117 of the Health and Safety Code that is required to be removed to a Class I, II or III disposal site in accordance with the provisions of existing law.
2. Subsurface or latent physical conditions at the site differing from those indicated.
3. Unknown physical conditions at the site of any unusual nature, different materially from those ordinarily encountered and generally recognized as inherent in work of the character provided for in this Contract.

BAIFA will promptly investigate the conditions, and if it finds the conditions to be materially different or to involve hazardous waste, and cause a decrease or increase in the your cost of, or the time required for, performance of any part of the work, will issue a Change Order under the procedures described in **GC-65, Change Requests and Change Notices**, and **GC-66, Change Orders.** Any suspension of Work will be administered in accordance with the provisions of **GC-69,Suspension of the Work**. If a dispute arises between BAIFA and you whether the conditions materially differ, or involve hazardous waste, or cause a decrease or increase in your cost of, or time required for, performance of any part of the work, you are not excused from any scheduled completion date provided for by this Contract, but will proceed with all work to be performed under this Contract; *provided, however,* you retain any and all rights provided either by Contract or by law which pertain to the resolution of disputes and protests between the contracting parties.

DocuSign Envelope ID: 894511EA-295B-49EB-A393-D26A6837FDD4

GC-10 Conflicts of Interest

Covenant that Contractor presently has no interest and shall not acquire any interest, direct or indirect, which would conflict in any manner or degree or have the potential of conflicting with the performance of the services required on the Contract. Contractor further covenants that in the performance of the Contract no person having any such interest shall be employed.

No member, officer, employee or agent of BAIFA, during his/her tenure shall have any prohibited interest as defined by California Government Code Sections 1090, *et seq.* and 87100 *et seq.,* direct or indirect, in the Contract or the proceeds thereof. Prohibited interests include interests of immediate family members, domestic partners, and their employers or prospective employers. Accordingly, Contractor further covenants that it has made a complete disclosure to BAIFA of all facts of which it is aware upon due inquiry bearing on any possible interest, direct or indirect, which it believes any member, officer, agent or employee of BAIFA (or an immediate family member, domestic partner or employer or prospective employer of such member, officer agent or employee) presently has, or will have in the Contract, or in the performance thereof, or in any portion of the profits thereunder. Willful failure to make such disclosure, if any, shall constitute grounds for cancellation and termination hereof by BAIFA.

Take all reasonable measures to preclude the existence or development of an organizational conflict of interest in connection with work performed under the agreement resulting from this and other BAIFA solicitations. An organizational conflict of interest occurs when, due to other activities, relationships, or contracts, a firm or person is unable, or potentially unable, to render impartial assistance or advice to BAIFA; a firm or person's objectivity in performing the Contract work is or might be impaired; or a firm or person has an unfair competitive advantage in proposing for award of a Contract as a result of information gained in performance of this or some other Project. Whenever BAIFA is awarding a Contract that involves the rendering of advice, it will consider whether there exists the potential for bias, because of other activities, relationships or contracts to you, and if so, whether any potential bias can be mitigated acceptably by BAIFA and you.

Do not engage the services of any subcontractor or independent contractor on any work related to this Agreement if the subcontractor or independent contractor, or any employee of the subcontractor or independent contractor, has an actual or apparent organizational conflict of interest related to work or services contemplated under this Agreement.

If at any time during the term of this Construction Agreement you become aware of an organizational conflict of interest in connection with the work performed hereunder, you will immediately provide BAIFA with written notice of the facts and circumstances giving rise to this organizational conflict of interest. Your written notice will also propose alternatives for addressing or eliminating the organizational conflict of interest. If at any time during the period of performance of this Agreement, BAIFA becomes aware of an organizational conflict of interest in connection with your performance of the work hereunder, BAIFA will similarly notify you. In the event a conflict is presented, whether disclosed by you or discovered by BAIFA, BAIFA will consider the conflict presented and any alternatives proposed and meet with you to determine an appropriate course of action. BAIFA's determination as to the manner in which to address the conflict will be final.

DocuSign Envelope ID: 894511EA-295B-49EB-A393-D26A6837FDD4

Failure to comply with this section may subject you to damages incurred by the BAIFA in addressing organizational conflicts that arise out of work performed by you, or to termination of this Construction Agreement for breach.

GC-11 Reserved

GC-12 Archaeological/Historical Discoveries

If this project has been designated in **Part 1, Invitation to Bidders** as an archaeological sensitive project, refer to **Part 6, Special Conditions**.

Should any archaeological or historical artifacts or skeletal material be discovered or unearthed during construction activities, all work within thirty (30) feet of the find will be halted. The Contractor (Subcontractor) [or Engineer or Inspector as appropriate] will immediately notify BAIFA, and BAIFA will initiate procedures in accordance with 36 CFR 800.11, State Law (California Public Resources Code Section 5097.98, Health and Safety Code Section 7050.5, and Alameda County Ordinance Code Sections B6-16 through B6-23. Construction activities within thirty (30) feet of the find will remain halted until authorization is obtained from the Environmental Program Manager, or the Environmental Program Manager's named and designated agent, that construction in the vicinity of the find may resume.

In the event of work suspension pursuant to this section, within twenty-four (24) hours, notify BAIFA of the costs involved resulting from said work stoppage. Maintain a log of each such stoppage of work, setting forth the date and time of notification of work stoppage, date and time of actual cessation of operations in the area, and date and time of commencement of operations and costs incurred herein. Submit a claim for reimbursement of such costs within seventy-two (72) hours thereof and will notify BAIFA of the anticipated amount of claim within twenty-four (24) hours of said work suspension. In the event of work suspension thereunder, exert all reasonable efforts to otherwise utilize labor and equipment affected by the suspension in other portions of the project.

GC-13 Confidential Information

13.1 Nondisclosure of Confidential Information

During the performance of the work under the Contract, it may be necessary for BAIFA to disclose or make certain confidential, non-public or proprietary information ("Confidential Information") available to Contractor for purposes of carrying out the Project. Confidential Information may be tangible, intangible, visual, oral, written, and/or electronic information, present or future, and includes: (i) proprietary information learned through inspection of drawings, specifications or equipment; (ii) descriptions of proprietary processes, designs, functionality or know-how; (iii) proprietary software, programming data, code or information; and (iv) other information disclosed in writing and marked as "Confidential" or with a similar notice. As between BAIFA and Contractor, Confidential Information will remain the sole and exclusive property of BAIFA, and no license or other rights to Confidential Information or any works deriving from Confidential Information is granted or implied hereby. Confidential Information does not include information that: a) is now or subsequently becomes generally available to the public through no

DocuSign Envelope ID: 894511EA-295B-49EB-A393-D26A6837FDD4

fault of the Contractor; b) Contractor can demonstrate to have had rightfully in its possession prior to disclosure by BAIFA or its contractors, vendors or licensors; c) Contractor rightfully obtains from a third party who has the right to transfer or disclose it; or (d) is required to be disclosed by law or applicable legal process.

Contractor agrees to take all necessary and reasonable precautions to maintain the confidentiality of Confidential Information and agrees not to use, copy, distribute or disclose such Confidential Information except for the business purpose underlying this Contract, except as authorized in writing by BAIFA. Contractor further agrees to disclose Confidential Information only to its directors, officers, employees and Contractors who need to know such information, and who have agreed to be bound by the terms and conditions of this GC 13.1. Promptly upon the request of BAIFA, at any time and for any reason, Contractor will destroy or return to the BAIFA, at BAIFA's option, all documents, computer files and other tangible materials that contain Confidential Information. These obligations survive the termination of this Contract, unless otherwise agreed in writing by BAIFA.

Contractor agrees to require any agents or third parties to whom Confidential Information must be disclosed to execute a nondisclosure agreement that incorporates the substantive requirements of this GC 13.1, the terms of which will be provided in advance to BAIFA for review and comment.

13.2 Personally Identifiable Information

Personally identifiable information ("PII") will be transported by BAIFA and partner agencies through the Backhaul. You will not extract, retrieve, or store PII data at any time unless directed by BAIFA in writing. PII is any information that is collected or maintained by BAIFA or you that identifies or describes a person or can be directly linked to a specific individual. Examples of PII include, but are not limited to, name, address, phone or fax number, license plate number, State of registration, vehicle make, model and year, FasTrak® account number, toll tag number, credit card information, and travel pattern data. The following special conditions related to the confidentiality and use of PII, apply to this Contract.

13.2.1 Right to Audit

You will permit BAIFA and its authorized representatives to audit and inspect: (i) Your facilities where PII is stored or maintained; (ii) any computerized systems used to share, disseminate or otherwise exchange PII; and (iii) Your security practices and procedures, data protection, business continuity and recovery facilities, resources, plans and procedures. The audit and inspection rights hereunder will be for the purpose of verifying your compliance with this Contract, and all applicable laws.

13.2.2 General Confidentiality of Data

All PII made available to or independently obtained by you in connection with this Agreement will be protected by you from unauthorized use and disclosure through the observance of the same or more effective procedural requirements as are applicable to BAIFA. This includes, but is not limited to, the secure transport, transmission and storage of data used or acquired in the performance of this Contract.

DocuSign Envelope ID: 894511EA-295B-49EB-A393-D26A6837FDD4

You agree to properly secure and maintain any computer systems (hardware and software applications) that you will use in the performance of this Contract. This includes ensuring all security patches, upgrades, and anti-virus updates are applied as appropriate to secure PII, which may be used, transmitted, or stored on such systems in the performance of this Contract.

You are prohibited from storing PII on portable media including, but not limited to laptops, thumbdrives, disks and so forth.

You will purge all PII no later than three (3) months after PII was retrieved or provided by BAIFA. At the conclusion of this retention period, you agree to discard PII, using Department of Defense("DOD") approved methods to permanently remove PII from any files. Discarded data will be unavailable and unrecoverable following the purge on any storage media including, but not limited to, magnetic disk, optical disk, and memory chips ("Storage Media"). No backup will be available following the purge.

You agree to destroy hard-copy documents containing PII by means of a cross-cut shredding machine. You agree to use Department of Defense ("DoD") approved methods to sanitize any Storage Media containing PII prior to discarding (a) after useful life has ended or (b) at the conclusion of the Project, whichever comes first. At the conclusion of the performance period of this Contract, you will submit a certification to the BAIFA Project Manager as follows: "All PII whether in electronic or hard-copy format, has been destroyed in accordance with the requirements contained in this General Condition, GC-13.2.2, General Confidentiality of Data.

13.2.3 Compliance with Statutes and Regulations

You agree to comply with the information handling and confidentiality requirements outlined in the California Information Practices Act (Civil Code sections 1798 et seq.) and in the California Streets and Highways Code Section 31490. In addition, you warrant and certify that in the performance of this Contract, you will comply with all applicable statutes, rules, regulations and orders of the United States, the State of California and BAIFA relating to the handling and confidentiality of PII, including the terms and conditions contained in this GC 13.2, Personally Identifiable Information, and agree to indemnify, hold harmless, and defend BAIFA Indemnified Parties in accordance with **Part 6, SC-1, Indemnification**, against any loss, cost, damage or liability by reason of your violation of this provision.

13.2.4 Subcontractors

BAIFA's approval in writing is required prior to any disclosure by you of PII to a subcontractor or prior to any work being done by a subcontractor that entails receipt of PII. Once approved, you agree to require such subcontractor to sign an agreement in substantially identical terms as this attachment, binding the subcontractor to comply with its provisions.

13.2.5 Contractor Guarantees

DocuSign Envelope ID: 894511EA-295B-49EB-A393-D26A6837FDD4

You will not, except as authorized or required by your duties by law, reveal or divulge to any person or entity any PII which becomes known to you during the term of this Contract.

You will keep all PII entrusted to you completely secret and will not use or attempt to use any such information in any manner which may injure or cause loss, either directly or indirectly, to BAIFA.

You will comply, and will cause your employees, representatives, agents and subcontractors to comply, with such directions as BAIFA may make to ensure the safeguarding or confidentiality of all your resources.

If requested by BAIFA, you will sign an information security and confidentiality agreement provided by BAIFA and attest that your employees, representatives, agents, and subcontractors involved in the performance of this Agreement will be bound by terms of a confidentiality agreement with Contractor substantially the same in its terms.

13.2.6 Notice of Security Breach

You will immediately notify BAIFA when you discover that there may have been a breach in security which has or may have resulted in compromise to PII. For purposes of this section, immediately is defined as within two hours of discovery. The BAIFA contact for such notification is as follows:

PRIVACY OFFICER
(510) 817-5700
privacyofficer@mtc.ca.gov

GC-14 Patent Rights

Any discovery or invention which is an integral part of the items being furnished under this Contract, as well as all information, design, specifications, data and findings which arise or is developed in the course of performing the work under this Contract, will become the property of BAIFA.

GC-15 Intellectual Property, Copyright and Patent Infringement

You, upon BAIFA's request, must defend BAIFA and Caltrans against any claim against BAIFA and/or Caltrans for patent, copyright, trademark, trade secret, or other intellectual property infringement based upon BAIFA's or Caltrans' use of any work, goods, or services provided by you pursuant to this Contract. If BAIFA requests you to defend against such claim, you will hold BAIFA and Caltrans harmless from, and indemnify BAIFA and Caltrans or applicable Municipality for, any liability arising from the claim, provided that (I) BAIFA notifies you in writing promptly, but not more than thirty (30) days after BAIFA has actual notice of the claim; (ii) you have sole control of the defense and all related settlement negotiations, unless otherwise agreed by the Parties; and (iii) BAIFA gives you all available information and reasonable

DocuSign Envelope ID: 894511EA-295B-49EB-A393-D26A6837FDD4

assistance for that defense. If you fail or refuse to defend any such claim, BAIFA and/or Caltrans may assume control of the defense and you will indemnify and hold BAIFA and Caltrans harmless for all fees, costs and expenses associated with or arising from such defense.

This obligation will not apply when the alleged infringement arises entirely from modification of the work, goods, or services by BAIFA without your approval.

GC-16 Rights in Technical Data

BAIFA has the right to use, duplicate or disclose, in whole or in part, in any manner and for any purpose whatsoever, and to have or permit others to use: Any manuals, instructional materials prepared for installation, operation, maintenance or training purposes and technical data pertaining to end items, components or processes which were prepared for the purpose of identifying sources, size, configuration, mating and attachment characteristics, functional characteristics and performance requirements ("form, fit and function" data; e.g., specification control drawings, catalog sheets, outline drawing). The term Technical Data as used herein means technical writing, sound records, pictorial reproductions, drawings, or other graphic representations and works of a technical nature, whether or not copyrighted, which are specified to be delivered pursuant to this Contract. The term does not include financial reports, costs analyses, and other information incidental to Contract administration.

For copyrighted material, you agree to and do hereby grant to BAIFA and Caltrans, and to their Commissioners, Directors, officers, agents and employees acting within the scope of their official duties, a royalty-free, nonexclusive and irrevocable license for BAIFA and/or Caltrans to publish, translate, reproduce, deliver, perform, dispose of, and to authorize others to use, all Technical Data now or hereafter covered by copyright.

No such copyrighted matter will be included in Technical Data furnished hereunder without written notice of the copyright owner granting BAIFA and State consent to use such copyrighted matter in the manner above described.

Report to BAIFA promptly and in reasonable written detail each notice or claim of copyright infringement received by you with respect to any Technical Data delivered hereunder.

BAIFA reserves the right to use the design and the tooling developed for the furnishing of equipment under this Contract in future contracts based on this specification. Maintain design data, including drawings, layouts, and any relevant Engineering data, and all necessary tooling in good order for a minimum of four (4) years after final Acceptance of the last items furnished under this Contract, and transfer that data, including tooling, to BAIFA upon request at no cost to BAIFA. All plans, drawings, diagrams, schematics, and specifications becomes the property of BAIFA, unless otherwise designated by BAIFA.

GC-17 Ownership of Work and Material

BAIFA owns all materials, work in progress, software and hardware licenses, and finished goods produced by you pursuant to this Contract, for which progress payments have been made and which have been satisfactorily delivered to a designated area. Such ownership will be free of

DocuSign Envelope ID: 894511EA-295B-49EB-A393-D26A6837FDD4

all encumbrances. Nevertheless, you are responsible for risk of loss for those items of Work for which you have care, custody and control, until final acceptance of all work.

Unless otherwise specifically provided in this Contract, provide and pay for materials, equipment, tools, utilities, transportation, and other facilities and services necessary for the prosecution of the Work provided for in this Contract.

Submit to BAIFA a "Final Release of All Liens and Claims" as a condition precedent to receiving final payment under this Contract.

GC-18 Title and Risk of Loss

Unless otherwise provided for, title to the Work and risk of loss will pass to BAIFA upon final acceptance of the Work, and furnish or execute all necessary documents of title at that time.

GC-19 Assignment and Delegation

Do not assign any of its rights or delegate any of its responsibilities under this Contract without the prior written consent of BAIFA.

GC-20 Subcontracts

You are fully responsible and liable for the products and actions of all subcontractors and suppliers of any tier, and must include in each subcontract any provisions necessary to make all of the provisions of this Contract fully effective. Provide all necessary plans, specifications, schedules, and instructions to your suppliers and subcontractors to enable them to properly perform their work. Submit executed copies of all subcontracts entered into pursuant to this Contract to BAIFA within sixty (60) calendar days from issuance of a Notice of Award.

GC-21 Waiver and Non-waiver

A waiver by one party of a right to a remedy for breach of this Contract by the other party will not be deemed to waive the right to a remedy for a subsequent breach by the other party. BAIFA's acceptance of goods, or services or payment under this Contract, does not preclude BAIFA from recovering against you or your surety for damages due to your failure to comply with this Contract.

GC-22 Antitrust Claims

In entering into a public works contract, or a subcontract to supply goods, services, or materials pursuant to a public works contract, you agree to assign to the awarding body all rights and title to, and all interest in all causes of action it may have under Section 4 of the Clayton Act, or under the Cartwright Act, arising from the purchases of goods, services, or materials pursuant to the public works contracts or subcontracts. This assignment will be made and become effective at the time the awarding body tenders final payment to you, without further acknowledgement by the parties.

DocuSign Envelope ID: 894511EA-295B-49EB-A393-D26A6837FDD4

GC-23 Stop Notices

BAIFA will withhold payments otherwise due to you in order to satisfy Stop Notices which have been properly filed, in accordance with the requirements of California Civil Code Title 15, Chapter 4, regarding Stop Notices. Include this **GC-23, Stop Notices** in all subcontracts and similar documents entered into by you for the performance of Work under this Contract.

7.2 AUTHORIZED REPRESENTATIVES AND COMMUNICATIONS

GC-24 Authorized Representatives

Designate, in writing, before starting work, an Authorized Representative who, during performance of the Contract, has full authority to act on your behalf in all matters within the scope of this Contract.

When the Contractor is comprised of two or more persons, firms, partnerships, or corporations functioning on a joint venture basis, said authorized representative must have the authority to represent and act for the joint venture.

Said authorized representative must be present at the site of the Work at all times while work is actually in progress on the Contract. When work is not in progress and during periods when work is suspended, arrangements acceptable to BAIFA must be made for any emergency work that may be required.

Whenever said authorized representative is not present on any particular part of the Work where BAIFA may desire to give direction, orders will be given by BAIFA, which will be received and obeyed by the superintendent or foremen who may have charge of the particular work in reference to which the orders are given.

Except as hereinafter provided, all orders by BAIFA are given in writing. Those not so given will be considered to be invalid and not binding. Emergency conditions dealing with safety of persons and protection of property are accepted, and such oral directions will be confirmed in writing as soon as possible, but must be immediately complied with by you.

BAIFA will similarly designate, in writing, an Authorized Representative to be its formal contact between BAIFA and you. Said Authorized Representative will be responsible for all matters relating to the execution of work within the scope of this Contract and will decide all questions which may arise as to the quality or acceptability of the Work and as to the manner of performance and rate of progress of the Work; all questions which may arise as to the interpretation of plans and specifications; all questions as to the acceptable fulfillment of the Contract on the part of you; and all questions as to compensation for work performed.

Written notification to the other party must be provided, in advance, of changes in the name or address or the scope of authority vested in such Authorized Representative.

DocuSign Envelope ID: 894511EA-295B-49EB-A393-D26A6837FDD4

Each Authorized Representative may, from time to time, delegate to other named individuals certain authority and responsibilities. The names of such individuals, the scope of their authority and responsibility, and the designation of their titles will be communicated to the other party in writing.

The designation of Authorized Representatives of the parties and their delegates as outlined above will take place at the pre-construction meeting as specified in **GC-26, Pre- Construction Meeting**.

GC-25 Notices and Communications

25.1 Notices

All notices and other communications concerning this Contract must be written in English, must bear the number assigned to this Contract by BAIFA and must follow BAIFA's correspondence format and reference system. Notices and other communications may be delivered personally, by electronic mail, by telegram, by private package delivery, by FAX, or by regular, certified, or registered mail.

The names of the individuals for each of the parties and their addresses to which other communications and correspondence should be delivered will be established and made known to the other party at the pre-construction meeting as specified in **GC-26, Pre-Construction Meeting**.

A notice to BAIFA will be effective only if it is delivered to BAIFA's Authorized Representative at the address to be made known to Contractor at the pre-construction meeting as specified in **GC-26, Pre-Construction Meeting**.

A notice to you will be effective only if it is delivered to your Authorized Representative at the address to be made known to BAIFA at the pre-construction meeting as specified in **GC-26, Pre-Construction Meeting**.

25.2 Drawing/Plan Clarification

BAIFA will respond to inquiries from you in the form of drawing and plan clarifications. These clarifications are intended to make some requirement(s) of the drawings or plans clearly understood. Drawing clarifications/plan clarifications may be sketches, drawings or in narrative form and will not change any requirement of the drawings or plans. Responses to your inquiries will be as outlined in the Article 25.3 Requests for Information of these General Conditions.

25.3 Requests for Information (RFIs)

In the event that you, subcontractor or supplier, at any tier, determines that some portion of the drawings, specifications or other Contract documents requires clarification or interpretation by BAIFA, submit a Request for Information (RFI) in writing to BAIFA. Requests for Information may only be submitted by you and must only be submitted on the Request for Information form provided by BAIFA. Clearly and concisely set forth the issue for which clarification or interpretation is sought and why a response is needed from BAIFA. In the RFI, set forth your own

DocuSign Envelope ID: 894511EA-295B-49EB-A393-D26A6837FDD4

interpretation or understanding of the requirement along with the reasons why you have reached such an understanding.

BAIFA will review all RFI to determine whether they are Requests for Information within the meaning of this Contract. If BAIFA determines that the document is not a RFI it will be returned to you, unreviewed as to content, for resubmittal as the appropriate document required by the subject matter.

Responses to RFI will be issued within **five (5) working days** of receipt of the request from you unless BAIFA determines that a longer period of time is necessary to provide an adequate response. If a longer period of time is determined necessary by BAIFA, BAIFA will, within five (5) calendar days of receipt of the request notify you of the anticipated response time. The five (5) calendar days referred to herein will start on the date stamped received "In From Contractor" by BAIFA and depends on the date stamped "Out to Contractor" by BAIFA If you submit a RFI on an activity with **five (5) working** days or less of float on the current project schedule, mark the RFI as "Critical." You are not entitled to any time extension due to the time it takes BAIFA to respond to such Critical request provided that BAIFA responds within the **five (5) working** days set forth above.

Responses from BAIFA will not change any requirement of the Contract documents unless so noted in the response to the RFI. In the event you believe that a response to a RFI will cause a change to the requirements of the Contract, immediately give written notice to BAIFA in accordance with **GC-65, Change Requests and Change Notices**. Failure to give such written notice will waive your right to seek additional time or cost in accordance with **GC-65.1, Change Requests**, of these Contract documents.

GC-26 Pre-Construction Meeting

Prior to issuance of a Notice to Proceed, a pre-construction meeting will be held at a time and place to be designated by notice from BAIFA. At this meeting, detailed procedures will be discussed for handling the following items:

1. Authorized Representative
2. Correspondence
3. Notices
4. Change requests and change notices
5. Change orders
6. Submittals
7. Approvals
8. Progress payments
9. Schedules
10. Community relations
11. Inspection plans
12. Requests for Information (RFI)
13. Other pertinent agenda items

DocuSign Envelope ID: 894511EA-295B-49EB-A393-D26A6837FDD4

GC-27 Project Meetings

BAIFA will schedule and preside over all meetings (including but not limited to weekly, pre-production, periodic, and special meetings) throughout the progress of the Work. Agendas for the meetings may include, but are not necessarily limited to, discussions of performance observations, problems, conflicts, schedules, delivery schedules, supplier fabrication, quality standards, Contract modifications, and any other topics that BAIFA determines to be relevant to the project. Your attendance at these meetings is mandatory.

GC-28 Publicity Releases

All publicity releases or releases of reports, papers, articles, maps, or other documents in any way concerning this Contract or the Work hereunder which you or any of your subcontractors desires to make will be subject to approval by BAIFA prior to release.

7.3 TIME FOR PERFORMANCE OF WORK

GC-29 Reserved

GC-30 Reserved

GC-31 Reserved

GC-32 Reserved

GC-33 Reserved

7.4 PERFORMANCE OF WORK

GC-34 Reserved

GC-35 Temporary Construction Facilities and Utilities

Furnish all temporary construction facilities, utilities, and services that are necessary to prosecute the Work. This includes, but is not limited to, fencing, flagmen, sanitary facilities, security, power, water and weather protection. Remove all temporary facilities upon completion of the Work or when they are no longer needed for your purposes, whichever is earlier.

GC-36 Character of Workers

DocuSign Envelope ID: 894511EA-295B-49EB-A393-D26A6837FDD4

If any Subcontractor or person employed by you appears to BAIFA to be incompetent or to act in a disorderly, improper or unsafe manner, such person will be discharged immediately on the request of BAIFA, and such person will not again be employed on the Work.

GC-37 Working Environment

Ensure and maintain a working environment free of personal harassment and intimidation between your forces and BAIFA employees and members of the public at all BAIFA project sites and in all BAIFA facilities at which your forces are assigned to work. Conduct that creates an intimidating, hostile, or offensive working environment is prohibited. Failure to comply with the above will be considered a material breach of this Contract.

GC-38 Public Convenience and Safety

Conduct your operations as to offer the least possible obstruction and inconvenience to the public and will have under construction no greater length or amount of work than can be prosecuted properly with due regard to the rights of the public. Unless otherwise provided in the Contract, all public traffic will be permitted to pass through the Work with as little inconvenience or delay as possible. Where possible, such traffic will be routed on new or existing paved surfaces. Spillage resulting from hauling operations along or across any public traveled way will be removed immediately by you at your expense. Existing traffic signal and highway lighting systems will be kept in operation for the benefit of the traveling public during progress of the Work, and other forces will continue routine maintenance of existing systems.

Install signs, lights, flares, barricades, and other facilities for the sole convenience and direction of public traffic and will furnish competent flaggers or a uniformed police officer whose sole duties will consist of directing the movement of public traffic through or around the Work.

Work will be performed in such a manner as to eliminate unnecessary noise, obstructions and other annoyances to occupants. Do not encumber premises with materials, equipment, and/or parking of cars; store materials, equipment and park cars in designated areas.

See **Part 10, Construction Details,** for additional traffic control requirements, if any.

GC-39 Cooperation/Coordination and Work by Others

Coordinate your Work with all other Contractors and subcontractors performing Work on the site. Schedule your Work so as to avoid conflicts with other Contractors and to avoid damage to completed or incomplete Work. You are responsible for any damage to the Work of other Contractors or subcontractors if your actions resulted in such damage. Take immediate action to remedy such damage so as to not delay the immediate prosecution of the Work.

GC-40 Security

Provide and be responsible for all security at the job site that is required to protect your material and equipment and all Work in place. You are also responsible for providing all security

DocuSign Envelope ID: 894511EA-295B-49EB-A393-D26A6837FDD4

and traffic control required by any city having jurisdiction in the area where Work is being performed.

GC-41 Product Options, Supplier Approval and Substitutions

For products specified in this Contract or in your submittals by brand name or manufacturer, whether or not followed by the words "or approved equal," select any product or manufacturer named, or submit a request to substitute an equal product or manufacturer. As required by the California Public Contract Code §3400, such request will be made within thirty-five (35) calendar days from date of the Notice of Award in order to receive consideration, unless later submission of a request is agreed to by BAIFA. Submit a separate request for each substitution. The burden of proof as to the equality of any material, process or article will rest with you. BAIFA's determination of the equality or superiority of an article proposed for substitution will be based upon but need not be limited to consideration of such factors as are specified in the Technical Specifications; dimensional compatibility with other materials with which it combines to produce a unified design system; all aspects of finished appearance including form, texture, and color, as it affects other design elements. In the event an approved substitution is more expensive than the specified materials, process or article, the difference in cost of such material, process or article so furnished is at your cost. You may not make a substitution without BAIFA's prior written approval. If applicable, specific requirements for the submittal of such requests will be contained in **Part 6, Special Conditions**.

BAIFA approves or disapproves your request for substitution of suppliers or products within thirty (30) days of BAIFA's receipt of all information required by BAIFA for such determination.

GC-42 Source of Materials

You are completely responsible for locating, identifying, and furnishing all materials required to be furnished under this Contract, except for Owner Furnished Materials**.** BAIFA will perform or cause to be performed all tests required to demonstrate to BAIFA's satisfaction that the proposed materials satisfy the requirements of the Contract.

GC-43 Reserved

GC-44 Reserved

GC-45 Protection and Restoration of Property

In addition to any other requirements imposed by law, shore up, brace, underpin, and protect as may be necessary, all foundations and other parts of all existing structures adjacent to and adjoining the site of the Work which are in any way affected by your operations. Whenever any notice is required to be given by BAIFA or you to any adjoining or adjacent landowner or other party before beginning any Work under this Contract, such notice will be given by you.

DocuSign Envelope ID: 894511EA-295B-49EB-A393-D26A6837FDD4

Any damage arising from or in consequence of the performance of the Contract, to improvements or property, whether above or below ground, private or public, within or adjacent to the project limits, will be repaired at once by you. If the best interests of BAIFA require such repair to be made prior to the execution of any part of the Work included in this Contract, BAIFA will so notify Contractor, who will delay or discontinue the performance of that part of the Work until the necessary repair has been made. Such delay will not be considered unavoidable, and no extension of time for completion of the Contract will be made.

When ordered by BAIFA to make any such repair, start work thereon within four hours and prosecute the same with diligence to completion. Upon failure to so comply with such order, or upon failure to make immediate emergency repairs which are necessary in the best interests of BAIFA or of the Public, BAIFA will have the authority to cause such repair to be made and to deduct the costs thereof from any money due, or which may become due you.

In any emergency affecting the safety of life or property including adjoining property, you, without special instructions or authorization from BAIFA, are authorized to act at your discretion to prevent such threatened loss or injury, and you will so act whether or not it is instructed to do so by BAIFA.

GC-46 Utility Paint Markings

Completely remove all utility paint markings at project completion. Removal will be by use of the high water pressure method only. Payment for removal of all utility paint markings will be considered as included in the price paid for other items of work.

GC-47 Reserved

GC-48 Inspection

BAIFA will at all times have access to the Work and will be furnished every reasonable facility for verifying that the materials and workmanship conform to the requirements of the Contract. BAIFA may test and inspect, either at your, subcontractor's or supplier's facility, all components, subsystems or workmanship prior to assembly of such components into the Work and prior to acceptance of the Work by BAIFA. Following such testing and inspection, BAIFA will issue a deficiency list to you listing those items that fail to comply with the Contract. BAIFA may either reject or require correction of defective material, workmanship, or nonconformity to this Contract. At your own expense, make available tools, pits, hoists, scaffolds, platforms, other equipment, facilities, drawings, and assistance as may be necessary for inspections or tests.

The costs of inspections conducted by you as described in **Part 10, Construction Details**, will be borne by you. The costs of the Inspectors for all other inspections will be borne by BAIFA and will not be a part of the Contract Price. Costs of re-inspection will be back charged to you. The performance of, or the failure to perform, such inspection will not relieve you of any responsibility for complete Contract performance. Where shop inspection is required by the terms of the Contract, do not ship materials until BAIFA releases such materials for shipment.

DocuSign Envelope ID: 894511EA-295B-49EB-A393-D26A6837FDD4

GC-49 Reserved

GC-50 Removal of Rejected or Unauthorized Work

All work that has been rejected will be remedied, or removed and replaced by you in a manner acceptable to BAIFA, and no compensation will be made for such removal, replacement or remedial work.

Any work performed outside of the limits of Work shown on the drawings or established by BAIFA or any extra work done without written authorization of BAIFA will not be paid for. Upon order of BAIFA such unauthorized work will be remedied, removed or replaced at your expense.

If you fail to comply promptly with any such order of BAIFA, BAIFA may cause the rejected or unauthorized work to be removed, replaced, or remedied, and to deduct the costs thereof from any moneys due to you.

GC-51 Disposal of Materials

Except for materials generated pursuant to **GC-9, Hazardous Materials or Unusual Conditions**, you are responsible for the disposal of all excess materials generated during the performance of this Contract. When any material is to be disposed of outside the project area, other than a public dump, you will first obtain a written permit from the property owner on whose property the disposal is to be made and he/she will file with BAIFA said permit or a certified copy thereof together with a written release from the property owner absolving BAIFA from any and all responsibility in connection with the disposal of material and said property, and before any material is disposed of on said property, obtain written permission from BAIFA to dispose of the material at the location designated in said permit.

GC-52 Protection of Completed Portions of Work

Protect completed portions of the Work until final acceptance of the Work by BAIFA. Contractor must take prompt action to remedy or repair any and all damage sustained to Work that is partially or wholly complete and has not yet been accepted by BAIFA.

GC-53 Cleanup

In addition to any requirements which may be included in **Part 10, Construction Details,** at all times during performance of Work under this Contract, keep the site clean from all rubbish and debris. Before final inspection of the Work, clean the material sites and all ground occupied by it in connection with the Work of all rubbish, excess materials, falsework, forms, temporary structures, and equipment. All parts of the Work will be left in a neat and presentable condition.

GC-54 Redlined Construction Drawings

DocuSign Envelope ID: 894511EA-295B-49EB-A393-D26A6837FDD4

Drawings showing all approved changes made during construction which differ from the approved drawing set for construction, will be furnished by you prior to the acceptance of the Work. Final construction drawings submitted to BAIFA will be in the form of redlined drawings clearly and neatly indicating all changes made with the approval of BAIFA and other field changes made which reflect the as-built condition of the Contract. During the construction period, redlined construction drawings will be maintained by you and made available to BAIFA for review on a daily basis.

GC-55 Reserved

7.5 COMPENSATION, PAYMENTS, RECORDS AND AUDIT

GC-56 Compensation

You will accept the compensation set out in the Contract as full payment for:

1. Furnishing all labor, materials, tools, equipment, and incidentals necessary to properly perform and satisfactorily complete all the Work included under this Contract;
2. All loss or damage arising from the nature of the Work, or from the action of the elements, or from any unforeseen difficulties which may be encountered during the prosecution of the Work until final acceptance by BAIFA;
3. All risks of every description connected with the prosecution of the Work, and for all expenses incurred in consequence of the suspension or discontinuance of the Work as provided in the Contract.

Neither the payment of any progress payment nor any retained percentage will relieve you of any obligation to make good any defective work or material.

No compensation will be made in any case for the loss of anticipated profits.

GC-57 Reserved

GC-58 Certified Payroll

BAIFA reserves the right to require you and all your subcontractors to furnish electronic certified payroll records directly to BAIFA in addition to the reporting requirement stated below. You and all your subcontractors shall register with the Department of Industrial Relations pursuant to Labor Code section 1725.5 and will furnish electronic certified payroll records directly to the Labor Commissioner through the internet portal of the Division of Labor Standards Enforcement.

GC-59 Invoicing and Progress Payments

You are paid for the value of all accepted quantities for the various items of work satisfactorily completed in accordance with the Contract and computed in accordance with the applicable measurement for payment provisions of the Contract. Before any payment becomes

DocuSign Envelope ID: 894511EA-295B-49EB-A393-D26A6837FDD4

due, prepare for BAIFA's approval a schedule of values of the main categories of the Work included in any items paid for as a lump sum and any items for which partial payment for materials on hand will be made. Each item in the schedule of values will include its proper share of overhead and profit. The values in the schedule will be used only for determining the amount of each progress payment. A proposed schedule may be rejected if any item is determined by BAIFA to be unbalanced. BAIFA may request a detailed schedule of values of such items.

Prior to the end of each payment period, prepare and forward to BAIFA a progress payment invoice in writing consisting of the value of the total amount of Work done plus the value of the acceptable materials on hand. Acceptable materials on hand consist of materials or equipment furnished and delivered by you to the site but not yet incorporated in the Work and properly stored in a location acceptable to BAIFA. In order for materials on hand to be considered for payment, request payment for them on BAIFA-furnished forms accompanied by documentation as therein required including, but not limited to, evidence of purchase if appropriate.

BAIFA will retain **five (5) percent** of such invoiced value as part security for the fulfillment of the Contract by you, and will pay to you the balance not retained, after deducting therefrom all previous payments and all sums to be kept or retained under the provisions of the Contract. No such invoice or payment will be construed to be an acceptance of any defective work or improper materials.

After 50% of the Contract Amount, as modified by any Change Orders, has been earned, and if satisfactory progress has been made in accordance with the approved Contract progress schedule, BAIFA will make the remaining progress payments in full, without retention. If, however, you subsequently fall behind the approved Contract progress schedule, BAIFA may resume retention up to **five (5) percent** of all progress payments, including those payments that were made in full.

In accordance with the provisions of applicable California law, you may be permitted to substitute securities in lieu of the withholding from progress payments specified above. Substitutions will be done in accordance with California Public Contract Code Section 22300 (see below).

Work completed in place is an estimate only, and no inaccuracy or error in said estimates operates to release you or any Surety from damages arising from such Work or from enforcing each and every provision of this Contract, and BAIFA has the right to subsequently correct any error made in any invoice submitted for payment. No such invoice or payment is required to be made when, as determined by BAIFA, the Work is not proceeding in accordance with the provisions of the Contract, or when the total value of the Work done since the last estimate amounts to less than $500.00.

In addition to the amounts that BAIFA may retain as provided hereinabove, BAIFA may withhold additional amounts from any payments otherwise due to Contractor as it determines necessary to cover:

1. Payments which may be past due and payable for just claims against you or any Subcontractor for labor or materials furnished in performance of the Work under the Contract;

DocuSign Envelope ID: 894511EA-295B-49EB-A393-D26A6837FDD4

2. For defective work not remedied;
3. For failure of you to make proper payments to any of your Subcontractors;
4. A reasonable doubt that you will complete the Work within the Contract time limits;
5. Damage to other work or property caused by you or your Subcontractor of any tier; if applicable;
6. An amount, not less than 10 percent of the total progress payment, due to the failure to abate, within one (1) working day or immediately in cases of imminent danger, infractions of BAIFA's Injury Prevention Program (BAIFA/IPP), Contractor's Safety Plan, CAL/OSHA, FEDERAL OSHA, ANSI or other applicable safety standards;
7. An amount not to exceed 20 percent of the total progress payment, due to four or more repeated infractions in a single payment period of BAIFA/IPP, Contractor's Safety Plan CAL/OSHA, FEDERAL OSHA, ANSI and all other applicable safety standards.

You are not entitled to have any payment estimates processed or be entitled to have any payment made for work performed so long as any lawful or proper direction concerning the Work or any portion thereof given by BAIFA remains uncomplied with.

Whenever BAIFA, in accordance herewith, withholds any moneys otherwise due to you, written notice of the amount withheld and the reasons therefore will be given to you, and when you remove the grounds for such withholding, BAIFA will pay you the amount so withheld.

Progress payments will be based on a four-week period as mutually agreed to by BAIFA.

Securities may be substituted in lieu of the withholding of progress payments in accordance with Public Contract Code § 22300, which states:

§ 22300 Substitution of Securities for Retentions; Escrow Account

(a) Provisions will be included in any invitation for bid and in any Contract documents to permit the substitution of securities for any moneys withheld by a public agency to ensure performance under a Contract, however, substitution of securities provisions will not be required in contracts in which there will be financing provided by the Farmers Home Administration of the United States Department of Agriculture pursuant to the Consolidated Farm and Rural Development Act (7 U.S.C. § 1921 et. seq.), and where federal regulations or policies, or both, do not allow the substitution of securities. At the request and expense of Contractor, securities equivalent to the amount withheld will be deposited with the public agency, or with a state or federally chartered bank in this state as the escrow agent, who will then pay those moneys to you. Upon satisfactory completion of the Contract, the securities will be returned to you.

(b) Alternatively, you may request and BAIFA will make payment of retentions earned directly to the escrow agent at your expense. At your expense, you may direct the investment of the payments into securities and you will receive the interest earned on the investments upon the same terms provided for in this section for securities deposited by you. Upon satisfactory completion of the Contract, you will receive from the escrow agent all securities, interest, and payments received by the escrow agent from BAIFA, pursuant to the terms of this section.

(c) Securities eligible for investment under this section will include those listed in Section 16430 of the Government Code, bank or savings and loan certificates of deposit, interest-bearing demand

DocuSign Envelope ID: 894511EA-295B-49EB-A393-D26A6837FDD4

deposit accounts, standby letters of credit, or any other security mutually agreed to by you and the public agency.

You will be the beneficial owner of any securities substituted for moneys withheld and will receive any interest thereon.

Failure to include these provisions in bid and Contract documents will void any provisions for performance retentions in a public agency Contract.

For purposes of this section, the term "public agency" will include, but will not be limited to, chartered cities.

(d)(1) Any Contractor who elects to receive interest on moneys withheld in retention by a public agency will, at the request of any subcontractor, make that option available to the subcontractor regarding any moneys withheld in retention by the Contractor from the subcontractor. If the Contractor elects to receive the identical rate of interest received by the Contractor on any retention moneys withheld from the subcontractor by the Contractor, less any actual pro rata costs associated with administering and calculating that interest. In the event that the interest rate is a fluctuating rate, the rate for the subcontractor will be determined by calculating the interest rate paid during the time that retentions were withheld from the subcontractor. If the Contractor elects to substitute securities in lieu of retention, then, by mutual consent of the Contractor and subcontractor, the subcontractor may substitute securities in exchange for the release of moneys held in retention by the Contractor.

(2) This subdivision will apply only to those subcontractors performing more than five percent of the Contractor's total bid.

(3) No Contractor will require any subcontractor to waive any provision of this section.

(e) The Legislature hereby declares that the provisions of this section are of statewide concern and are necessary to encourage full participation by Contractors and subcontractors in public contract procedures.

(f) The escrow agreement used hereunder will be null, void, and unenforceable unless it is substantially similar to the following form:

ESCROW AGREEMENT FOR SECURITY DEPOSITS IN LIEU OF RETENTION

This Escrow Agreement is made and entered into by and between

_____ whose address is _____
hereinafter called "Owner,"
_____ whose address is _____
hereinafter called "Contractor" and _____, a state or federally chartered bank, whose address is _____ hereinafter called "Escrow Agent."
For the consideration hereinafter set forth, BAIFA, Contractor, and Escrow Agent agree as follows:

DocuSign Envelope ID: 894511EA-295B-49EB-A393-D26A6837FDD4

(1) Pursuant to Section 22300 of the Public Contract Code of the State of California, Contractor has the option to deposit securities with Escrow Agent as a substitute for retention earnings required to be withheld by Owner pursuant to the Construction Contract entered into between BAIFA and Contractor for _____ in the amount of _____ dated _____ (hereinafter referred to as the "Contract"). Alternatively, on written request of Contractor, BAIFA will make payments of the retention earnings directly to the Escrow Agent. When Contractor deposits the securities as a substitute for Contract earnings, the Escrow Agent will notify BAIFA within 10 days of the deposit. The market value of the securities at the time of the substitution will be at least equal to the cash amount then required to be withheld as retention under the terms of the Contract between BAIFA and Contractor. Securities will be held in the name of _____, and will designate Contractor as the beneficial owner.

(2) BAIFA will make progress payments to Contractor for those funds which otherwise would be withheld from progress payments pursuant to the Contract provisions, provided that the Escrow Agent holds securities in the form and amount specified above.

(3) When BAIFA makes payment of retentions earned directly to the Escrow Agent, the Escrow Agent will hold them for the benefit of the Contractor until the time that the escrow created under this Contract is terminated. The Contractor may direct the investment of the payments into securities. All terms and conditions of this agreement and the rights and responsibilities of the parties will be equally applicable and binding when BAIFA pays the Escrow Agent directly.

(4) Contractor will be responsible for paying all fees for the expenses incurred by Escrow Agent in administering the Escrow Account and all expenses of BAIFA. These expenses and payment terms will be determined by BAIFA, Contractor, and Escrow Agent.

(5) The interest earned on the securities or the money market accounts held in escrow and all interest earned on that interest will be for the sole account of Contractor and will be subject to withdrawal by Contractor at any time and from time to time without notice to BAIFA.

(6) Contractor will have the right to withdraw all or any part of the principal in the Escrow Account only by written notice to Escrow Agent accompanied by written authorization from BAIFA to the Escrow Agent that Owner consents to the withdrawal of the amount sought to be withdrawn by Contractor.

(7) BAIFA will have a right to draw upon the securities in the event of default by Contractor. Upon seven days' written notice to the Escrow Agent from BAIFA of the default, the Escrow Agent will immediately convert the securities to cash and will distribute the cash as instructed by BAIFA.

(8) Upon receipt of written notification from BAIFA certifying that the Contract is final and complete, and that Contractor has complied with all requirements and procedures applicable to the Contract, Escrow Agent will release to Contractor all securities and interest on deposit less escrow fees and charges of the Escrow Account. The escrow will be closed immediately upon disbursement of all moneys and securities on deposit and payments of fees and charges.

(9) Escrow Agent will rely on the written notifications from BAIFA and Contractor pursuant to Sections (5) to (8), inclusive, of this agreement and BAIFA and Contractor will hold Escrow Agent

DocuSign Envelope ID: 894511EA-295B-49EB-A393-D26A6837FDD4

harmless from Escrow Agent's release and disbursement of the securities and interest as set forth above.

(10) The names of the persons who are authorized to give written notice or to receive written notice on behalf of BAIFA and on behalf of Contractor in connection with the foregoing, and exemplars of their respective signatures are as follows:

On behalf of Owner:
_____ (Title)
_____ (Name)
_____ (Signature)
_____ (Address)
On behalf of Contractor:
_____ (Title)
_____ (Name)
_____ (Signature)
_____ (Address)
On behalf of Escrow Agent:
_____ (Title)
_____ (Name)
_____ (Signature)
_____ (Address)

(11) Securities eligible for deposit by Contractor or investment hereunder will be _____ and no others.

At the time the Escrow Account is opened, BAIFA and Contractor will deliver to the Escrow Agent a fully executed counterpart of this Agreement.

IN WITNESS WHEREOF, the parties have executed this Agreement by their proper officers on the date first set forth above.
_____ (Owner)
_____ (Title)
_____ (Name)
_____ (Signature)

_____ (Contractor)
_____ (Title)
_____ (Name)
_____ (Signature)

GC-60 Force Account Payment

If work is directed by BAIFA to be performed on a force account basis, compensation will be made as set forth in this provision. Such payment will constitute full compensation to Contractor for work directed to be performed on force account and no additional compensation

DocuSign Envelope ID: 894511EA-295B-49EB-A393-D26A6837FDD4

will be allowed therefore. Labor, materials and equipment used in the performance of work on a force account basis will be approved daily by BAIFA.

60.1 Work Performed by Contractor

Contractor will be paid the direct costs for labor, materials and equipment used in performing the Work as hereinafter provided except where agreement has been reached to pay in accordance with the GC-60.7. A markup may be added to the total of the direct costs computed as provided in GC-60.2, 60.3, 60.4. The added markup will not exceed 30 percent of the cost of labor, 10 percent of the cost of material, 10 percent of the equipment rental and 10 percent of the cost of subcontractors.

The above markups will constitute full compensation for all overhead costs (general overhead, supervision, office expenses, field office facilities, utilities, and transportation) that will be deemed to include all items of expense not specifically designated as cost or equipment rental in accordance with the subsections entitled "Labor," "Materials," and "Equipment Rental."

When work paid for on a force account basis is performed by forces other than Contractor's organization, Contractor will reach agreement with such other forces as to the distribution of the payment made by BAIFA for such work. No additional payment therefore will be made by BAIFA by reason of the performance of the Work by a subcontractor or other forces.

60.2 Labor

Contractor will be paid the cost of labor for the workmen (including foremen when authorized by BAIFA) used in the actual and direct performance of the Work. The cost of labor, whether the employer is Contractor, subcontractor, or other forces, will be the sum of the following:

1. **Actual Wages.** The actual wages paid will include any employer payments to or on behalf of the workmen for health and welfare, pension, vacation, insurance, overtime, plus other additives in accordance with collective bargaining agreements.

2. **Labor Surcharge.** To the actual wages, as defined above, will be added a Labor Surcharge as set forth in the State of California, Department of Transportation, Business, Transportation and Housing Agency Publication, "*Labor Surcharge & Equipment Rental Rates,* which was in effect on the date upon which the Work was accomplished. Said labor surcharge will constitute full compensation for all payments imposed by State and Federal laws and for all other payments made to, or on behalf of, the workmen, other than actual wages as defined above and the actual subsistence and travel allowance. Provided, however that any costs for workers compensation insurance provided by BAIFA will be deducted from the above Labor Surcharge total.

60.3 Materials

BAIFA reserves the right to furnish such materials as it deems advisable, and Contractor will have no claims for costs and markup on such materials. Only materials furnished by Contractor and necessarily used in the performance of the Work will be paid for. The cost of such materials

DocuSign Envelope ID: 894511EA-295B-49EB-A393-D26A6837FDD4

will be the cost to the purchaser, whether Contractor, subcontractor or other forces, from the supplier thereof, except as the following are applicable:

1. If a cash or trade discount by the actual supplier is offered or available to the purchaser, it will be credited to BAIFA notwithstanding the fact that such discount may not have been taken.
2. If materials are procured by the purchaser by any method which is not a direct purchase from and a direct billing by the actual supplier to such purchaser, the cost of such materials will be deemed to be the price paid to the actual supplier as determined by BAIFA. No markup except for actual costs incurred in the handling of such materials will be permitted.
3. If the materials are obtained from a supply or source owned wholly or in part by the purchaser, payment therefore will not exceed the price paid by the purchaser for similar materials furnished from said source on contract items or the current wholesale price for such materials delivered to the jobsite, whichever price is lower.
4. If the cost of such materials is, in the opinion of BAIFA, excessive, then the cost of such material will be deemed to be the lowest current wholesale price at which such materials are available in quantities concerned delivered to the jobsite, less any discounts as provided above.

60.4 Equipment Rental

Compensation for equipment used on force account work will be determined from the latest schedule of equipment rental rates listed in the State of California, Department of Transportation, Business, Transportation and Housing Agency Publication, "L*abor Surcharge & Equipment Rental Rates*," and in use at the time the equipment is used. The equipment rental rates listed in said publication will be used regardless of ownership and any rental or other agreement, if such may exist for the use of such equipment entered into by Contractor. If it is deemed necessary by BAIFA to use equipment not listed in the said publication, a suitable rental rate for such equipment will be established by BAIFA prior to the work being done. Contractor will furnish any cost data that might assist BAIFA in the establishment of such rental rate.

The rental rate paid as above provided will include the cost of fuel, oil, lubrication, supplies, small tools, necessary attachments, repairs and maintenance of any kind, depreciation, storage, insurance and all incidentals.

Operators of rental equipment will be paid for as provided in the Subsection entitled "Labor."

All equipment will, in the opinion of BAIFA, be in good working condition and suitable for the purpose for which the equipment is to be used.

Unless otherwise specified, manufacturer's ratings and manufacturer-approved modifications will be used to classify equipment for the determination of applicable rental rates. Equipment that has no direct power unit will be powered by a unit of at least the minimum rating recommended by the manufacturer.

DocuSign Envelope ID: 894511EA-295B-49EB-A393-D26A6837FDD4

Individual pieces of equipment or tools having a replacement value of $250 or less, whether or not consumed by use, will be considered to be small tools and no payment will be made therefore.

Rental time will not be allowed while equipment is inoperative due to breakdowns.

60.5 Equipment at the Site of the Work

The rental time to be paid for equipment on the Work will be the time the equipment is in operation on the Work being performed, and in addition, will include the time required to move the equipment to the location of the Work and return it to the original location or to another location requiring no more time than that required to return it to its original location, except that moving time will not be paid for if the equipment is used at the site of the Work on other than such work. Loading and transporting costs will be allowed, in lieu of moving time, when the equipment is moved by means other than its own power, except that no payment will be made if the equipment is used at the site of the Work on other than such Work. The following will be used in computing the rental time of equipment on the Work:

1. When hourly rates are listed, less than thirty (30) minutes of operation will be considered to be one-half hour of operation.
2. When daily rates are listed, less than four (4) hours of operation will be considered to be one-half day of operation.

60.6 Equipment Not at the Site of the Work

For the use of equipment moved onto the site of the Work and used exclusively for work paid for on a force account basis, Contractor will be paid the rental rates as determined in the Subsection entitled "Equipment Rental" and for the cost of transporting the equipment to the location of the Work and its return to its original location, all in accordance with the following provisions:

1. The original location of the equipment to be hauled to the location of the Work will be agreed to by BAIFA in advance.
2. BAIFA will pay the cost of loading and unloading such equipment.
3. The cost of transporting equipment in low bed trailers will not exceed the hourly rates listed in the State of California, Department of Transportation, Business, Transportation and Housing Agency Publication, "*Labor Surcharge & Equipment Rental Rates*".
4. The cost of transporting equipment will not exceed the applicable minimum established rates of the Public Utilities Commission.

The rental period will begin at the time the equipment is unloaded at the site of the Work, will include each day that the equipment is at the site of the Work, excluding Saturdays, Sundays, and BAIFA holidays unless the equipment is used to perform the Work on such days, and will terminate at the end of the day on which BAIFA directs Contractor to discontinue the use of such equipment. The rental time to be paid per day will be in accordance with the following:

Hours of Operation	Hours to be Paid	Hours of Operation	Hours to be Paid

DocuSign Envelope ID: 894511EA-295B-49EB-A393-D26A6837FDD4

0	4	4.5	6.25
0.5	4.25	5	6.5
1	4.5	5.5	6.75
1.5	4.75	6	7
2	5	6.5	7.25
2.5	5.25	7	7.5
3	5.5	7.5	7.75
3.5	5.75	8	8
4	6	Over 8	Actual Hours in Operation

The hours to be paid for equipment that is operated less than eight (8) hours due to breakdowns will not exceed eight (8) less the number of hours the equipment is inoperative due to breakdowns.

When hourly rates are listed, less than thirty (30) minutes of operation will be considered to be one-half hour of operation. When daily rates are listed, payment for one-half day will be made if the equipment is not used. If the equipment is used, payment will be made for one day. The minimum rental time to be paid for the entire rental period on an hourly basis will not be less than eight (8) hours or if on a daily basis will not be less than one day.

Should Contractor desire the return of the equipment to a location other than its original location, BAIFA will pay the cost of transportation in accordance with the above provisions, provided such payment will not exceed the cost of moving the equipment to the Work.

Payment for transporting, and loading and unloading equipment, as provided above, will not be made if the equipment is used on the Work in any other way than upon Work paid for on a force account basis.

When work, other than work specifically designated as Work in the Contract Documents, is to be paid for on a force account basis and BAIFA determines that such work requires Contractor to move on to the site equipment which could not reasonable have been expected to be needed in the performance of the Contract, payment for the use of such equipment at equipment rental rates in excess of those listed as applicable for the use of such equipment will be made subject to the following additional conditions:

1. BAIFA will specifically approve the necessity for the use of particular equipment on such Work.
2. Contractor will establish to the satisfaction of BAIFA that such equipment cannot be obtained from its normal equipment source or sources and those of its subcontractors.
3. Contractor will establish to the satisfaction of BAIFA that the proposed equipment rental rate for such equipment from its proposed source is reasonable and appropriate for the expected period of use.
4. BAIFA will approve the equipment source and the equipment rental rate to be paid by BAIFA before Contractor begins work involving the use of said equipment.

60.7 Work Performed by Special Forces or Other Special Services

DocuSign Envelope ID: 894511EA-295B-49EB-A393-D26A6837FDD4

When BAIFA and Contractor, by mutual agreement, determine that a special service or an item or work cannot be performed by the forces of Contractor, or those of any of its subcontractors, such service or work item may be performed by a specialist. Invoices for such service or item of work, performed by a specialist on the basis of the current market price thereof, may be accepted without complete itemization of labor, material, and equipment rental costs when it is impracticable and not in accordance with the established practice of the special service industry to provide such complete itemization.

In those instances wherein a Contractor is required to perform work necessitating a fabrication or machining process in a fabrication or machine shop facility away from the jobsite, the charges for that portion of the Work performed in such a facility, may by mutual agreement, be accepted as a specialist billing.

In lieu of the percent markups provided above in the Subsection entitled "Work Performed by Contractor", a 15 percent markup will be added to the specialist price, less a credit to BAIFA for any cash or trade discount offered or available, whether or not such discount may have been taken.

60.8 Owner-Operated Equipment

When "Owner-Operated Equipment" is used to perform work to be paid on a force account basis, Contractor will be paid for the equipment and operator, as follows:

1. Payment for the Equipment will be made in accordance with the Subsection 60.4 herein entitled "Equipment Rental."
2. Payment for the cost of labor and subsistence or travel allowance will be made at the rates paid by Contractor to other workmen operating similar equipment already on the project or, in the absence of such other workmen, at the rates for such labor established by collective bargaining agreements for the type of workmen and location of the Work, whether or not the "Owner-Operator" is actually covered by such an agreement. A labor surcharge will be added to the cost of labor described herein, in accordance with the provisions of Subsection 60.2 (2) entitled "Labor Surcharge."
3. To the direct cost of equipment rental and labor, computed as provided herein, will be added the markups for labor and equipment rental as provided in Subsection 60.1 entitled "Work Performed by Contractor."
4. If, at any time after Contractor commences the force account work, a method of compensation other than that specified in this Article has been agreed upon for the force account work or a portion of such work, such compensation will be made in accordance with such agreement.

Contractor will keep accurate daily records of the actual cost to Contractor for all work performed pursuant to this Article and will make them available to BAIFA upon reasonable notice and request. Such records will be maintained in such a manner so as to be completely discernible from records associated with the basic Contract scope.

GC-61 Prompt Payment

61.1 Payment to Contractor

DocuSign Envelope ID: 894511EA-295B-49EB-A393-D26A6837FDD4

Public Contract Code Section 20104.50 requiring prompt payment to Contractors is applicable to this Contract. Undisputed and properly submitted payment requests will be paid within thirty (30) days of receipt by BAIFA. Any undisputed and properly submitted payment request not paid within thirty (30) days will accrue interest at the legal rate set forth in Code of Civil Procedure Section 685.010.

Any payment request determined by BAIFA not to be a proper payment request suitable for payment will be returned to you within seven days of receipt setting forth in writing the reasons why the payment request is not proper.

61.2 Payment to Subcontractors

Adhere to all federal and California prompt payment laws and regulations including Business and Professions Code Section 7108.5 requiring you to pay subcontractors within ten (10) days of receipt of each progress payment to the extent of each subcontractor's interest therein, unless otherwise agreed to in writing.

Notwithstanding the time for payment of retention provided for in Public Contract Code Section 7107(d), pay retention proceeds to subcontractors within thirty (30) days after the subcontractor's work is satisfactorily completed, unless the time for payment calculated pursuant to Section 7107(d) would result in earlier payment of retention to the subcontractor.

GC-62 Final Payment

Final payment will not become due until the following actions have been satisfactorily completed:

1. Satisfactory completion of final inspection of all the Work under the Contract and the issuance by BAIFA of a Letter of Final Acceptance.
2. The recording of a Notice of Completion by BAIFA.
3. Your submittal to BAIFA of:
   a. An affidavit that all payrolls, bills for materials and equipment, and other indebtedness connected with the Work have been paid or otherwise satisfied, and
   b. A release of liens and claims arising out of the Contract, to the extent and in the form designated by BAIFA. If a claim remains unsatisfied after all payments are made, reimburse BAIFA for all monies that BAIFA may be compelled to pay in discharging the claim, including all costs and reasonable attorney's fees.

BAIFA may at its option and at any time retain out of any amounts due to you, sums sufficient to cover claims, filed pursuant to Section 8500 et seq. of the Civil Code.

BAIFA will make final payment, including outstanding retention, within **30-60 calendar days** of the recording of the Notice of Completion.

The acceptance of final payment by you constitutes a waiver of all claims against BAIFA arising under the Contract.

DocuSign Envelope ID: 894511EA-295B-49EB-A393-D26A6837FDD4

GC-63 Project Records

Comprehensive records and documentation relating to this project will be kept by you. The records will include, but are not limited to Contract Documents, Drawings, Specifications, Addenda, Shop Drawings and Submittals, Change Orders, Modifications, Test Records, redlined construction plans, As-Built Drawings, and cost and pricing data. Maintain a complete set of records relating to this Contract for a period of four (4) years from final payment for this Work, except as noted in SC-22 for Backhaul Network administration data. The cost records will be complete and in sufficient detail to allow evaluation of the accuracy and completeness, and currency of the costs or prices. Permit the authorized representatives of BAIFA to examine and audit all such records and any subcontracts under this Contract during the time period so specified. In addition, every contract involving the expenditure of public funds in excess of ten thousand dollars ($10,000) entered into by a public entity in the State of California will be subject to the examination and audit of the State Auditor, at the request of the public entity or as part of any audit of the public entity, for a period of four (4) years after final payment under the Contract.

7.6 CONTRACT MODIFICATIONS, DISPUTES AND CLAIMS

GC-64 Reserved

GC-65 Change Requests and Change Notices

65.1 Change Requests.

You may make a written request to BAIFA to modify the Contract (Change Request) based upon the receipt of, or the discovery of information that changes the scope, price, schedule, level of performance, or other facet of the Contract.

Deliver a document entitled “Change Request” to BAIFA within thirty (30) calendar days after receipt of, or the discovery of, information (other than receipt of a “Change Notice”) that you believe will cause a change to the scope, price, schedule, level of performance, or other facet of the Contract. Upon receipt of a Change Notice, follow the procedures of GC-65.2. All Change Requests, and any Claims based thereon including any request or claim for cumulative impact costs, are deemed waived unless a Change Request is delivered to BAIFA within the thirty (30) calendar days specified herein.

The Change Request must include information necessary to substantiate the effect of the change and any impacts to the work, including any change in schedule or Contract Price, and must include all existing documentation or a description of anticipated documentation. In addition, the Change Request will contain a detailed description of the proposed adjustment to the Contract Price or currently approved progress schedule, or both, and will reference any other provisions of the Contract that will require modification because of the change. If a Change Request proposes an adjustment in the Total Contract Price, upon request of BAIFA, submit a complete breakdown of costs including detailed pricing information and back up for all work and any impacts thereto contemplated by the change.

DocuSign Envelope ID: 894511EA-295B-49EB-A393-D26A6837FDD4

The unavailability of all information necessary to quantify the change will not excuse the timely submission of the Change Request. Supplement the Change Request with additional information or documentation, as it becomes available. If BAIFA has not received sufficient substantiating documentation or information within a reasonable time after receipt of the Change Request, such insufficiency may be grounds to deny the Change Request.

If a Change Request or portions thereof are acceptable to BAIFA, BAIFA will issue a Contract Change Order consistent therewith. If a Change Request or portions thereof are not acceptable to BAIFA, BAIFA will notify you in writing.

Any request by you to modify the Contract must first be submitted to BAIFA and proceed as a Change Request pursuant to these provisions. You may submit the matter as a Claim pursuant to GC 68, Claims only if, i) the Change Request has been denied by BAIFA in whole or in part, or ii) the Change Request has not been resolved within ninety (90) days after receipt by BAIFA.

In the event of a dispute, you will proceed with the Work without delay, as directed by BAIFA.

65.2 Change Notice

BAIFA may, at any time during performance of the Contract notify you of changes to the Contract by issuing a Change Notice to that effect. Within fifteen (15) calendar days after receipt of such Change Notice, provide to BAIFA a written response identifying any proposed adjustment in Contract Price, including any adjustment for cumulative impact costs and schedule to perform the changes identified in the Change Notice, unless another time period for response is specified in the Change Notice. BAIFA will then issue an appropriate Change Order.

If BAIFA directs you to perform additional work, the basis for compensation for such work will be either: 1) extension of Contract items, 2) negotiated lump sum price, or 3) force account, as determined by BAIFA. The markups described in GC-60.1 will be the maximum allowed for all additional work directed by BAIFA.

If you and BAIFA cannot agree on the appropriate adjustment to the Contract Price or schedule, you may either accept BAIFA's determination or identify and submit the matter as a Claim pursuant to the provisions of **GC 68, Claims**. In the event of a dispute, proceed with the Work without delay as directed by BAIFA.

GC-66 Change Orders

A Change Order is a written document issued by BAIFA, that:

1. Changes the Contract Price, as modified by any previously executed Change Orders, or
2. Alters the scope of Work under the Contract, or
3. Alters the schedule for performance of the Work under the Contract as set forth in the currently approved schedule, or
4. Makes any other change to the Contract, or makes a combination of any of the aforementioned Contract changes.

DocuSign Envelope ID: 894511EA-295B-49EB-A393-D26A6837FDD4

GC-67 Differing Site Conditions

67.1 Soil Boring or Other Data

Where BAIFA has included soil boring information or other data in the Contract, they are included for your information only and BAIFA does not guarantee the accuracy of the information contained therein.

67.2 Notice of Differing Conditions

BAIFA will, as soon as practicable, investigate or cause to be investigated the items noted by you and, if it is determined that such conditions do materially so differ and cause an increase or decrease in your cost of or time required for the performance of any part of the Work under the Contract, whether or not changed as a result of such conditions, an equitable adjustment will be made and the Contract modified.

GC-68 Claims

68.1 Claim Defined

"Claim" means a separate demand by you for (A) a time extension, (B) payment of money or damages arising from work done by, or on behalf of, you pursuant to the Contract and payment of which is not otherwise expressly provided for or that you are not otherwise entitled to, or (C) an amount the payment of which is disputed by BAIFA.

68.2 Claim Requirements

1. Any submittal intended by you to be evaluated by BAIFA as a Claim will be entitled "Claim".
2. All claims will be submitted by you within thirty (30) days after the date of the event giving rise to the Claim, such as, for example, the denial by BAIFA of a Change Request, the failure of BAIFA to respond to a Change Request within ninety (90) days after receipt of required substantiating information and documentation, or the issuance by BAIFA of a disputed Change Order. Any Claim not submitted within the specified thirty (30) days will be deemed waived.
3. Claims will be in writing and must be submitted with all documents necessary to substantiate the Claim. A Claim must state in as much detail as possible the basis for the Claim and the additional compensation or extra time to which you believe you are entitled, including:
    a. A detailed factual account of the events causing the potential claim, including:
        i. Pertinent dates
        ii. Locations
        iii. Work items affected by the potential claim
    b. The Contract documents supporting the potential claim and a statement of the reasons these parts support entitlement
    c. If a payment adjustment is requested, an itemized cost breakdown. Segregate costs into the following categories:
        i. Labor, including:

DocuSign Envelope ID: 894511EA-295B-49EB-A393-D26A6837FDD4

1. Individuals
2. Classifications
3. Regular and overtime hours worked
4. Dates worked

ii. Materials, including:
1. Invoices
2. Purchase Orders
3. Location of materials either stored or incorporated into the work

iii. Equipment, including:
1. Detailed descriptions, including make, model and serial number
2. Hours of use
3. Dates of use
4. Equipment rates at the rental rate listed in Labor Surcharge and Equipment Rental Rates in effect when the affected work related to the claim was performed

d. If a time adjustment is requested:
i. Dates for the requested time
ii. Reasons for a time adjustment
iii. Contract documentation supporting the requested time adjustment
iv. Time Impact Analysis (TIA). The TIA must demonstrate entitlement to a time adjustment.

e. Identification and copies of your documents and copies of communications supporting the potential claim, including certified payrolls, bills, cancelled checks, job cost reports, payment records, and rental agreements

f. Relevant information, references, and arguments that support the potential claim.

4. If the Claim is silent regarding entitlement to extra time, you are entitled to no extra time in connection with the Claim. If the Claim is silent regarding additional compensation, you are entitled to no additional compensation in connection with the Claim.
5. You must notify BAIFA promptly in writing of any changes in its estimates of additional compensation or extra time, and the notification must state the reasons for the changes.
6. All Claims and any amendments thereto will include the fully executed certification set forth below. Any Claim submitted without a fully executed certification will be rejected by BAIFA and returned to you.

I,_____, BEING THE_____(MUST BE AN OFFICER) OF_____(CONTRACTOR), DECLARE UNDER PENALTY OF PERJURY UNDER THE LAWS OF THE STATE OF CALIFORNIA, AND DO PERSONALLY CERTIFY AND ATTEST THAT I HAVE THOROUGHLY REVIEWED THE ATTACHED CLAIM FOR ADDITIONAL COMPENSATION AND/OR EXTENSION OF TIME, AND KNOW ITS CONTENTS, AND SAID CLAIM IS MADE IN GOOD FAITH; THE SUPPORTING DATA IS TRUTHFUL AND ACCURATE; THAT THE AMOUNT REQUESTED ACCURATELY REFLECTS THE CONTRACT ADJUSTMENT FOR WHICH THE CONTRACTOR BELIEVES THE OWNER IS LIABLE; AND, FURTHER, THAT I AM FAMILIAR WITH CALIFORNIA PENAL CODE SECTION 72 AND CALIFORNIA GOVERNMENT CODE 12650, *ET SEQ.*, PERTAINING TO FALSE CLAIMS, AND FURTHER KNOW AND UNDERSTAND THAT SUBMISSION OR CERTIFICATION OF A FALSE CLAIM MAY LEAD TO FINES, IMPRISONMENT, AND/OR OTHER SEVERE LEGAL CONSEQUENCES.

DocuSign Envelope ID: 894511EA-295B-49EB-A393-D26A6837FDD4

By_____

7. No Claims will be filed later than the date of final payment.

68.3 Claim Review

BAIFA will respond in writing to your Claim within forty-five (45) calendar days after BAIFA's receipt of the Claim or BAIFA may request in writing, within thirty (30) days of receipt of the Claim, any additional information or documentation supporting the Claim or relating to defenses to the Claim BAIFA may have against you. For claims exceeding $375,000 BAIFA may, at its option, notify you of extended time periods for review and response.

BAIFA's written response to the Claim, as further documented, will be submitted to you within fifteen (15) days after receipt of the further information or documentation or within a period of time no greater than that taken by you in producing the additional information, whichever is greater.

68.4 Meet and Confer

If you dispute BAIFA's written response, or if BAIFA fails to respond within the time prescribed, you may so notify BAIFA, in writing, either within fifteen (15) days of receipt of BAIFA's response or within fifteen (15) days of BAIFA's failure to respond within the time prescribed, respectively, and demand an informal conference to meet and confer for settlement of the issues in dispute. Upon a demand, BAIFA will schedule a meet and confer conference within thirty (30) days for settlement of the dispute.

Following the meet and confer conference, if the Claim or any portion remains in dispute, you may file a Government Code claim as provided in Chapter 1 (commencing with Section 910) of Part 3 of Division 3.6 of Title 1 of the Government Code. For purposes of those provisions, the running of the period of time within which a Government Code claim must be filed will be tolled from the time you submit your written Claim pursuant to the above provisions until the time the Claim is denied as a result of the meet and confer process, including any period of time utilized by the meet and confer process.

The above procedures do not apply to Government Code claims for tort damages and are not intended, and will not be construed, to change the time for filing such claims.

68.5 Procedures for Civil Actions

Public Contract Code Section 20104.4, set forth below, establishes the following procedures for all civil actions filed to resolve claims of $375,000 or less under this Contract:

(a) Within 60 days, but no earlier than 30 days, following the filing of responsive pleadings, the court will submit the matter to nonbinding mediation unless waived by mutual stipulation of both parties. The mediation process will provide for the selection within 15 days by both parties of a disinterested third person as mediator, will be commenced within 30 days of the submittal, and will be concluded within 15 days from the commencement of the mediation unless a time

DocuSign Envelope ID: 894511EA-295B-49EB-A393-D26A6837FDD4

requirement is extended upon a good cause showing to the court or by stipulation of both parties. If the parties fail to select a mediator within the 15-day period, any party may petition the court to appoint the mediator.

(b) (1) If the matter remains in dispute, the case will be submitted to judicial arbitration pursuant to Chapter 2.5 (commencing with Section 1141.10) of Title 3 of Part 3 of the Code of Civil Procedure, notwithstanding Section 1141.11 of that code. The Civil Discovery Act of 1986 (Article 3 (commencing with Section 2016) of Chapter 3 of Title 3 of Part 4 of the Code of Civil Procedure) will apply to any proceeding brought under this subdivision consistent with the rules pertaining to judicial arbitration.

(2) Notwithstanding any other provision of law, upon stipulation of the parties, arbitrators appointed for purposes of this article will be experienced in construction law, and, upon stipulation of the parties, mediators and arbitrators will be paid necessary and reasonable hourly rates of pay not to exceed their customary rate, and such fees and expenses will be paid equally by the parties, except in the case of arbitration where the arbitrator, for good cause, determines a different division. In no event will these fees or expenses be paid by state or county funds.

(3) In addition to Chapter 2.5 (commencing with Section 1141.10) of Title 3 of Part 3 of the Code of Civil Procedure, any party who after receiving an arbitration award requests a trial de novo but does not obtain a more favorable judgment will, in addition to payment of costs and fees under that chapter, pay the attorney's fees of the other party arising out of the trial de novo.

(c) The court may, upon request by any party, order any witnesses to participate in the mediation or arbitration process.

The above claims procedures are also subject to Public Contract Code § 20104.6, which provides:

(a) No local agency will fail to pay money as to any portion of a claim that is undisputed except as otherwise provided in the contract.
(b) In any suit filed under Section 20104.4, the local agency will pay interest at the legal rate on any arbitration award or judgment. The interest will begin to accrue on the date the suit is filed in a court of law.

7.7 SUSPENSION OF WORK, CONTRACT TERMINATION

GC-69 Suspension of the Work

In addition to the right of BAIFA to suspend Work under any other provision of this Contract, BAIFA may require you to suspend all or part of the Work called for by this Contract at any time for up to ninety (90) days after a written Suspension Order is delivered to you, and for any further period to which the parties may agree. The Suspension Order will include the following:

1. A clear description of the Work to be suspended;
2. Guidance as to the action to be taken on subcontracts; and

DocuSign Envelope ID: 894511EA-295B-49EB-A393-D26A6837FDD4

3. Other requests for minimizing costs.

Upon receipt of a Suspension Order, comply with its terms immediately and take all reasonable steps to minimize cost allocable to the Work covered by the Order during the period of work stoppage. Within the period specified by the Order, or within any extension of that period to which the parties may agree, BAIFA may:

1. Terminate the Work covered by the Order as set forth in this section.
2. Cancel the Suspension Order; or
3. Allow the period of the Suspension Order to expire.

Resume work upon the cancellation or expiration of a Suspension Order. An equitable adjustment will be made in the Work scope, Contract Price, or Contract time, as appropriate, and the Contract will be modified in writing in accordance with **GC-32, Excusable Delays and Extensions of Time and GC-69, Suspension of the Work** if:

1. The Suspension Order results in an increase in the time required for, or in your cost properly allocable to, the performance of any part of this Contract; and
2. You assert a claim for an adjustment within thirty (30) days after the end of the period of work stoppage; and
3. The Suspension Order was not caused by yours default or other act or omission within the control or responsibility of you.

In preparation for and during suspensions of work, take every reasonable precaution to prevent damage to or deterioration of the Work. Repair or replace, at no cost to BAIFA, Work that is damaged or deteriorated during a work suspension due to your failure to comply with this duty. If BAIFA determines that you are not taking reasonable precautions and you fail to take the corrective action within five (5) days after written notice from BAIFA, BAIFA may cause such action to be taken and recover the reasonable cost thereof from you.

GC-70 Termination for Convenience or in the Public Interest

BAIFA may terminate this Contract in whole or in part at any time by written notice to you if BAIFA determines that termination is in the best interest of BAIFA or the public. If this Contract is so terminated, you are entitled to payment for all Work performed acceptably, all acceptable goods or services ordered by and delivered to you before termination, and all reasonable termination costs, up to the maximum amount payable under the applicable Contract segments, Segment I and/or Segment II, and to the extent such segment has been authorized by BAIFA through a Notice To Proceed under this Contract, and provided that you provide a final itemized invoice for the above amounts within thirty (30) days after receiving the termination notice.

GC-71 Termination for Default

BAIFA may, by written notice of default to you, terminate your right to proceed with the Work under the Contract, in whole or with regard to any part if you do not cure or failure to comply with the term of the Contract within a period of seven (7) days (or such longer period as BAIFA

DocuSign Envelope ID: 894511EA-295B-49EB-A393-D26A6837FDD4

may authorize in writing) after receipt of notice from BAIFA specifying such failure, including, but not limited to, the following:

1. if you fail to supply an adequate working force, or materials of proper quality, or otherwise refuses or fails to prosecute the Work, or any separable part thereof, with such diligence as will ensure its completion within the time specified in this Contract, or authorized extension thereof; or
2. if you fail to make prompt payment to its subcontractors or suppliers upon receipt of progress payments from BAIFA; or
3. if you persistently disregard laws, ordinances, or instructions of BAIFA.

In the event of such termination for default, BAIFA may take over the Work and prosecute the same to completion, by Contract or otherwise, and may take possession of and use all or any part of your material, tools, equipment, and appliances as may be on the site of the Work and which are necessary for performance of the Work. Upon completion of such Work, you are entitled to return of all unused materials and its equipment, tools and appliances, except that there will be no claim on account of usual and ordinary depreciation, loss, or wear and tear.

If your right to proceed is so terminated, you are not entitled to receive any further payment until the Work is completed. You and your surety(s) will be liable to BAIFA for any additional costs of completion of the Work, including compensation for additional managerial and administrative services, plus liquidated damages accruing under the terms of this Contract from the Contract completion date, as extended by authorized time extensions, to the date of final completion.

If, after termination for failure to fulfill Contract obligations, it is determined that you were not in default, the rights and obligations of the parties will be the same as if the termination had been issued for the convenience of BAIFA.

GC-72 Contractor's Duties upon Termination

After receipt of a Notice of Termination, either for default or convenience, you will:

1. stop work under the Contract on the date and to the extent specified in the Notice of Termination;
2. place no further orders or subcontracts for materials, services, or facilities, except as may be necessary for completion of such portion of the Work under the Contract as is not terminated;
3. terminate all orders and subcontracts to the extent that they relate to the performance of Work terminated by the Notice of Termination;
4. assign to BAIFA in a manner, at the times, and to the extent directed by BAIFA, all of the right, title, and your interest under the orders and subcontracts so terminated.

7.8 WARRANTY PROVISIONS

DocuSign Envelope ID: 894511EA-295B-49EB-A393-D26A6837FDD4

GC-73 Warranty

It is a condition of this Contract that the equipment, materials or design furnished, and workmanship performed by you or any subcontractor or supplier at any tier, complies with the requirements of this Contract and must be free of any defect. Neither inspection, testing and acceptance by BAIFA of such equipment, material, design or work performed, partial or final payment, nor any provisions of the Contract relieves you from responsibility for any latent defect, gross mistakes or fraud. You and your surety(s) warrant, regardless of the warranties obtained from the Subcontractors, all equipment, materials, design and workmanship for a period of one year from the date of Final Acceptance by BAIFA of all of the work under the Contract or any discrete portion thereof. Your warranty with respect to work repaired or replaced must also run for one year from the date of repair or replacement. In addition, you must furnish a written guarantee covering all or certain items of work and must extend any warranty from a subcontractor or supplier that exceeds the above warranty period. If such additional or varying guarantees are required, they will be specified in **Part 6, Special Conditions** of this Contract. BAIFA retains the right, at its sole discretion, to assign to a third Party any warranty received under this Contract.

GC-74 Warranty Work

You are responsible for all warranty-covered repair work during the warranty period as specified above. Provide at your own expense, all spare products and tools required for repairs. To the extent practicable, BAIFA will allow you or your designated representative to perform such work. When warranty repairs are required, BAIFA and your representative will agree on the most appropriate remedy to be performed within a reasonable time. If you fail to remedy any failure or defect within a reasonable time, BAIFA will have the right to replace, repair, or otherwise remedy the failure or defect at your expense. At its discretion, BAIFA may also perform such work if it deems necessary to do so to meet its operational commitments or other requirements. Reimburse BAIFA of all expenses for such work including materials and labor. The hourly shop labor rates will be based on BAIFA's current labor cost accounting system. Reimburse BAIFA for such work within sixty (60) days of receipt of warranty claim.

GC-75 Warranty on Replaced Parts

Any materials, parts or components that are used for replacement under the initial warranty period will be warranted again for the total original warranty period of the replaced particular material, part or component.

GC-76 Systematic Failures

In the event that, during the warranty period, repairs or modifications necessitated by defective design, material, or workmanship occur to an extent in excess of 10 percent of the components used for the same function in the same assembly or subsystem purchased under this Contract, promptly furnish all necessary labor and material to effect such repairs and modifications for every system delivered under the Contract under the terms and conditions outlined, including systems in which the item has not yet failed. When requested by BAIFA, you are required to provide a written failure analysis report for defective products supplied under this Contract and

DocuSign Envelope ID: 894511EA-295B-49EB-A393-D26A6837FDD4

which occurred during the warranty period. The report will be received by BAIFA within forty-five (45) days from the date of request.

GC-77 Iran Contracting Act

AB 1650, Iran Contracting Act of 2010, which adds Sections 2200 et seq. to the California Public Contract Code, requires Proposers for contracts equal to or in excess of one million dollars ($1,000,000) to certify, at the time of proposal submission that proposer is not identified on a list created pursuant to subdivision (b) of Section 2203 as a person engaging in investment activities in Iran described in subdivision (a) of Section 2202.5, or as a person described in subdivision (b) of Section 2202.5, as applicable. Submit a signed Bid Form #6, Iran Contracting Act Document.

GC-78 Project Management

You will provide management of planning, execution, and control of all aspects of the work. You are also responsible for coordinating your activities with BAIFA, the Toll System Integrator (TSI), the Civil Contractor(s), BART and other entities that are directly or indirectly impacted by Work. You are responsible for documenting and reporting all aspects of the work. You will provide project management throughout the lifecycle of the project. You will develop and deliver the project management documents listed in this section.

You will develop and implement a Project Management Plan (PMP) which includes all aspects of the work, establishes clear communications, provides for coordination between organizations affected by your work, ensures adequate work resources are deployed efficiently, ensures adherence to the work schedule, fields experienced and qualified personnel. The PMP will be based on the PMBOK body of knowledge and will be subject to BAIFA review and approval.

Your project team organization and reporting relationships, including key project personnel, will be described in the PMP and an organizational chart and reflect their functional areas of responsibility. Any subcontractor relationships and responsibilities will be accurately reflected in the PMP and a corresponding organizational chart.

Project Management Plan

You will develop and submit to BAIFA for review a PMP in accordance with the schedule in the technical submittal table list.

The PMP must identify the specific processes, tools and techniques that provide full, frequent and routine transparency to BAIFA for all work being performed under the Agreement.

Your management approach must be described within the PMP, which will include all components of an effective and efficient management system, including but not limited to: communication and reporting; documentation; supervision of personnel and activities; tools, facilities, and materials; environmental protection and mitigation; safety of personnel, motorists, and the general public; and any other management elements needed to produce and document a

DocuSign Envelope ID: 894511EA-295B-49EB-A393-D26A6837FDD4

high-quality, safe, efficient, and operable Backhaul Network that minimizes environmental and traffic impacts. The PMP will specifically address the following areas:

1. Risk management, which includes identifying, tracking and addressing project risks.
2. Change management, which includes processes for managing impacts of changes on people, processes, data and technology, and mitigating any negative consequences.
3. Change control, which includes procedures for tracking potential and approved change orders, complying with BAIFA's change control procedures, and updating all related documentation and work orders to reflect changes approved by BAIFA.
4. Configuration management, which includes procedures for tracking potential, approved and implemented changes to Hardware, software, and their configurations and updating all related documentation.
5. Inventory management, which includes processes for managing the purchase, delivery, storage, tracking, installation, and reporting of all equipment needed for the project, as well as spares.
6. Coordination planning, which includes identifying stakeholders (e.g. civil and communications) and critical coordination dates, and developing plans to ensure coordination and dates are met.
7. Project schedule management as described in **Part 6**, **SC-23**.
8. Personnel management as described in this **GC-78**.

DocuSign Envelope ID: 894511EA-295B-49EB-A393-D26A6837FDD4

PART 8. NOT USED

DocuSign Envelope ID: 894511EA-295B-49EB-A393-D26A6837FDD4

PART 9. NOT USED

DocuSign Envelope ID: 894511EA-295B-49EB-A393-D26A6837FDD4

PART 10. CONSTRUCTION DETAILS

ORGANIZATION

Special provisions are under headings that correspond with the main-section headings of the *Standard Specifications*. A main-section heading is a heading shown in the table of contents of the *Standard Specifications*.

Each special provision begins with a revision clause that describes or introduces a revision to the *Standard Specifications* as revised by any revised standard specification herein.

Any paragraph added or deleted by a revision clause does not change the paragraph numbering of the *Standard Specifications* for any other reference to a paragraph of the *Standard Specifications*.

DocuSign Envelope ID: 894511EA-295B-49EB-A393-D26A6837FDD4

DIVISION I GENERAL PROVISIONS

1 GENERAL

Add to section 1-1.01:

Bid Items and Applicable Sections

Item description	Applicable section
Backhaul Communications Systems	86

^^

2 BIDDING

Add to Part 5 – Bid Forms

The Department makes the following supplemental project information available:

Supplemental Project Information

Means	Description
Included in the *Information Handout*	1. Storm Water Data Report 2. BSNF Permit

^^

3 CONTRACT AWARD AND EXECUTION

Replace this section with corresponding materials in Parts 1 to 7 of this Invitation for Bid.

^^

5 CONTROL OF WORK

Add to section 5-1.20A:

During the progress of the work under this Contract, work under the following contracts may be in progress at or near the job site of this Contract:

DocuSign Envelope ID: 894511EA-295B-49EB-A393-D26A6837FDD4

Coincident or Adjacent Contracts

Contract no.	County–Route–Post Mile	Location	Type of work
04-3G9504	CC-680-0.0/14.0, ALA-680-20.1/21.9	Dublin, San Ramon, Danville, Alamo and Walnut Creek	I-680 Express Lanes -Electronic Toll System Civil Infrastructure
04-2285G4	CC-680-4.5/R6.6	San Ramon and Danville	Landscaping Improvements
04-3J860	CC-680-0.0/24.6, ALA-680-20.1/21.9	Dublin, San Ramon, Danville, Alamo and Walnut Creek	Electronic Toll System Integration
04-2G4101	AlA-680-R20.0/R20.3	Pleasanton and Dublin	Replace existing MBGR w/ concrete barriers
04-3A8704	CC-680 – 22.7/24.8	Martinez	Replace Off-ramp

Submit an action plan to coordinate sequencing of work with the Traffic System Integrator (TSI) Electronic for the Toll System Integration work, 04-3J860 and the Civil Contractor(s) for the Toll Systems infrastructure work, Contract No. 04-3G9504.

Attend joint weekly meetings with the Engineer, the TSI and Civil contractors and, at a time and location determined by the Engineer, to coordinate work, traffic control and provide comments on construction installation work.

Bring to the joint weekly meeting a detailed 3-week look ahead schedule that includes all work that affects the public through traffic, noise or vibration, work that affects the operations of the TSI and Backhaul contractors, and work that requires the installation of traffic handling devices; lane closures; or Construction Zone Enhanced Enforcement Program (COZEEP).

DocuSign Envelope ID: 894511EA-295B-49EB-A393-D26A6837FDD4

Replace "Reserved" in Section 5-1.20C with:

This project does not include work on railroad properties but railroads are shown on the general plan sheet within the project limits. Do not trespass on the railroad properties within the project limits.

Add to section 5-1.36:

5-1.36E Property and Facility Preservation

Before starting work that could damage or interfere with underground infrastructure, locate the infrastructure described in the Contract and determine the presence of other underground infrastructure within ten feet of the work area.

Maintain adequate clearances when working near existing underground and overhead facilities. You must maintain 20 feet minimum clearance from energized overhead line conductors as required by OSHA regulations when operating equipment in the vicinity.

Notify the Engineer at least 2 business days before performing work within 10 feet of existing utilities.

Potholing within a City's right of way requires written permission from the City Engineer. If you choose to pothole for establishing and confirming utilities, you need to restore damaged pavement to the same state of completion as before the damage.

^^

8 PROSECUTION AND PROGRESS

Replace "Reserved" in section 8-1.02E with:

8-1.02E Weekly Schedule Progress Meeting (Critical Path Method)

Hold a weekly schedule progress meeting with the Engineer to:

1. Discuss the weekly controlling operation
2. Coordinate work and traffic control with the contractors for Contract Nos 04-3G9504 and 04-3J860.

Develop a 4-week schedule identifying the previous week's work and a 3-week look-ahead. Provide sufficient detail:

1. By including your and your subcontractors' actual and planned activities for offsite and construction work
2. To address all future activities
3. To identify issues requiring Engineer's action or input
4. To identify all construction activities that may affect the public through:
   4.1. Traffic
   4.2. Noise

DocuSign Envelope ID: 894511EA-295B-49EB-A393-D26A6837FDD4

4.3. Work that requires:
    4.3.1. Shoulder closure
    4.3.2. Lane closure
    4.3.3. COZEEP

5. To identify work that affects the operations of the contractor for Contract No's 04-3G9504 and 04-3J860.

Identify each activity in the 4-week schedule using the activity ID numbering system from the baseline schedule or the last accepted update schedule. To create the 4-week schedule, utilize the use of EXCEL spreadsheet or scheduling software as acceptable by the Engineer.

Replace "Reserved" in section 8-1.04C with:

Section 8-1.04B does not apply.

Do not start job site activities until the Department authorizes or accepts your submittal for:

1. CPM baseline schedule
2. WPCP
3. Notification of DRA or DRB nominee and disclosure statement
4. Contingency plan for opening closures to public traffic

You may enter the job site only to measure controlling field dimensions and locate utilities.

Do not start other job site activities until all the submittals from the above list are authorized or accepted and the following information is received by the Engineer:

1. *Notice of Materials To Be Used* form.

You may start job site activities before the 55th day after Contract approval if you:

1. Obtain specified authorization or acceptance for each submittal before the 55th day
2. Receive authorization to start

Submit a notice 72 hours before starting job site activities. If the project has more than 1 location of work, submit a separate notice for each location.

Add to section 8-1.10B:

You must begin work activities as shown in the table below. Do not start work activities until authorized by the Engineer. Modifications to this schedule must be submitted to the Engineer for approval.

DocuSign Envelope ID: 894511EA-295B-49EB-A393-D26A6837FDD4

Preliminary Segment I Project Schedule *		
Activity	**Work to Be Completed by Contractor**	**Begin Date**
1	• Project Kickoff and Pre-Construction Meeting • Obtain All Necessary Permits • Submit WPCP • Preparation of Project Management, Quality Management Plan and Schedule • Preparation of Network Installation, Implementation and Integration Plan	8/5/15
2	• Route 680 Civil Infrastructure Installation • Conduit readiness test of Backhaul conduit and pull boxes installed by the Route 680 Express Lanes Contractor (Sta. 479+00 to 1317+00) • Schedule PG&E Service Connection	9/1/15
3	• Civil Infrastructure for roadway Hubs and data center locations	10/7/15
4	• Route 680 fiber installation and OTDR testing (Sta. 479+00 to 1317+00) • Trunkline and drop cable splices to existing Caltrans and proposed HUB cabinets • Site Turnover to Toll System Integrator Contractor for installation of tolling equipment.	10/20/15
5	• Procurement of Backhaul network equipment and software • Off-Site Hardware Configuration • Management Software Integration	10/26/15
6	• Route 680 Fiber Installation and OTDR testing (Sta. 1317+00 to 1881+00)	11/30/15
7	• Installation, testing and certification of network equipment at HUB and Host Site locations. • Network readiness for Toll System Integrator Contractor to complete OFIT Testing by 1/20/2016.	12/30/15
8	• Logical network Operational and Maintenance and training manuals • As-built documentation of logical network.	4/19/16
9	• Route 680 on-going Operational and Maintenance activities	3/11/16

* Subject to Change

DocuSign Envelope ID: 894511EA-295B-49EB-A393-D26A6837FDD4

You must pay BAIFA liquidated damages in accordance with section 8-1.10A for failure to complete work as described in Part 1 "Specifications and Schedule" for both Segment I and Segment II. You must also pay BAIFA liquidated damages for not completing work as shown in the table below:

Location	Completed activity	Completion time after NTP 1 (working days)	Liquidated Damages for not completing work within approved schedule durations
Corridor Wide	Project Management Plan Package Submittal	24	$5000 per day
Sta 475+00 to Sta 1345+00	Complete corridor installation, fiber optic (OTDR) testing. Handoff to Toll System Integrator for lateral splice connections.	51	$5000 per day
Corridor Wide	Complete network hardware installation and testing. Department approved test results and site handoff to Toll System Integrator for OFIT	93	$5000 per day
Corridor Wide	Complete logical network as-builts, data center network certification, training manuals, and network training.	155	$5000 per day

For each Day completion is delayed beyond the time limit shown, pay to BAIFA liquidated damages pursuant to the table set forth above. Payments shall be due within 5 Days after demand therefor. If contractor misses more than one completed activity, liquidated damages will be cumulative.

Liquidated damages for Segment II shall be defined by mutual agreement of BAIFA and Contractor prior to issuance of the NTP for Segment II.

^^^

DocuSign Envelope ID: 894511EA-295B-49EB-A393-D26A6837FDD4

12 TEMPORARY TRAFFIC CONTROL

Replace "Reserved" in section 12-3.13 with:

12-3.13A General

12-3.13A(1) Summary

Section 12-3.13 includes specifications for protecting traffic and workers with an impact attenuator vehicle during moving lane closures and when placing and removing components of stationary lane closures, ramp closures, shoulder closures, or a combination.

Impact attenuator vehicles must comply with the following test levels under National Cooperative Highway Research Program 350:

1. Test level 3 if the preconstruction posted speed limit is 50 mph or more
2. Test levels 2 or 3 if the preconstruction posted speed limit is 45 mph or less

The impact attenuator vehicle must comply with the attenuator manufacturer's instructions for:

1. Support truck, except the weight of the support truck must comply with the allowable vehicle weight limits shown on the Authorized Materials List for highway safety features and the manufacturer's instructions
2. Trailer-mounted attenuator
3. Truck-mounted attenuator

Flashing arrow signs must comply with section 12-3.03 except you may use a portable changeable message sign instead of a flashing arrow sign. If a portable changeable message sign is used as a flashing arrow sign, it must comply with section 6F.56 "Arrow Panels" of the *California MUTCD*.

12-3.13A(2) Definitions

impact attenuator vehicle: Support truck that is towing a deployed attenuator mounted to a trailer or a support truck with a deployed attenuator that is mounted to the support truck.

12-3.13A(3) Submittals

Submit a certificate of compliance for each attenuator used on the project.

12-3.13A(4) Quality Control and Assurance

Do not start impact attenuator vehicle activities until authorized.
Before using an impact attenuator vehicle, conduct a meeting with the Engineer, subcontractors, and other parties involved with traffic control to discuss the operation of the impact attenuator vehicle during moving lane closures and when placing and removing components of a stationary traffic control system.

Schedule the location, time, and date for the meeting with all participants. Furnish a meeting facility located within 5 miles of the job site or at another authorized location.

12-3.13B Materials

Impact attenuator vehicles must be on the Authorized Materials List for highway safety features. Impact attenuator vehicles must comply with Veh Code Div 12.

DocuSign Envelope ID: 894511EA-295B-49EB-A393-D26A6837FDD4

For the Trinity MPS-350 truck–mounted attenuator, the support truck must not have a fuel tank mounted underneath within 10'-6" of the rear of the support truck.

Each impact attenuator vehicle must have:

1. Inverted "V" chevron pattern placed across the entire rear of the attenuator composed of alternating 4-inch wide nonreflective black stripes and 4-inch wide yellow retroreflective stripes sloping at 45 degrees
2. Type II flashing arrow sign
3. Flashing or rotating amber light
4. Operable 2-way communication system for maintaining contact with workers

12-3.13C Construction

Except where prohibited, use an impact attenuator vehicle:

1. To follow behind equipment and workers who are placing and removing components of a stationary lane closure, ramp closure, shoulder closure, or any combination. Operate the flashing arrow sign in the arrow or caution mode during this activity, whichever applies. Follow at a distance that prevents intrusion into the workspace from passing traffic.
2. As a shadow vehicle in a moving lane closure.

Monitor placement and use of the attenuator vehicle on a regular basis and adjust the use of the attenuator to match changing field conditions as construction progresses.

After placing components of a stationary traffic control system you may place the impact attenuator vehicle in advance of the work area or at another authorized location to protect traffic and workers.

Secure objects, including equipment, tools, and ballast on impact attenuator vehicles to prevent loosening upon impact by an errant vehicle.

Do not use a damaged attenuator in the work. Replace any attenuator damaged from an impact during work activities.

12-3.13D Payment

Not Used

Replace the 6th paragraph of section 12-4.02A with:

If a minor deviation from the requirements of this section regarding hours of work is required, submit a request at least 15 days before the proposed date of closure. If no significant increase in cost is accrued to the Department and the work can be expedited and better serve the traffic, the deviation may be authorized.

Add to section 12-4.02A:

Closure of the adjacent traffic lane is not required for installing, maintaining, and removing Category 1 and 2 traffic control devices.

For grinding and grooving operations, saw cutting concrete slabs, and installing loop detectors, closure of the adjacent traffic lane is not required if an impact attenuator vehicle is used as a shadow vehicle.

DocuSign Envelope ID: 894511EA-295B-49EB-A393-D26A6837FDD4

Concurrent stationary lane closures must be more than 2 miles apart. Closure spacing is the distance between the last cone of the upstream closure and the temporary sign (W20-1) of the downstream closure. The number of lanes open in the upstream closures must be less than or equal to the number of lanes open in the downstream closures. For multiple closures in each direction of travel, pick up downstream closures first.

Add to the RSS for section 12-4.03B:

For each 10-minute interval or fraction thereof past the time specified to open the closure, the Department deducts the amount for liquidated damages per interval shown in the table below. Liquidated damages are limited to 5 percent of the total bid per occurrence. Liquidated damages are not assessed if the Engineer orders the closure to remain in place beyond the scheduled pickup time.

Type of facility	Route	Direction or Segment	Period	Liquidated damages/interval ($)
Mainline (Lane Closure)	I-680	Northbound	1st half hour 2nd half hour 2nd hour and beyond	$4,300 / 10 minutes $6,500 / 10 minutes $8,700 / 10 minutes
Mainline (Lane Closure)	I-680	Southbound	1st half hour 2nd half hour 2nd hour and beyond	$1,800 / 10 minutes $2,800 / 10 minutes $3,800 / 10 minutes

Add to the RSS for section 12-4.03C:

Submit a contingency plan for each of the following activities:

1. HMA paving

Discuss the contingency plan with the Engineer at least 5 business days before starting the activity.

DocuSign Envelope ID: 894511EA-295B-49EB-A393-D26A6837FDD4

Replace "Reserved" in section 12-4.04 with:

Lane Closure Restriction for Designated Legal Holidays and Special Days

Thu	Fri	Sat	Sun	Mon	Tues	Wed	Thu	Fri	Sat	Sun
x	**H** xx	xx	xx							
	SD xx									
x	xx	**H** xx	xx							
		SD xx								
	x	xx	**H** xx	xx						
			SD xx							
	x	xx	xx	**H** xx	xxx					
	x	xx	xx	**SD** xx	xxx					
				x	**H** xx					
				x	**SD** xx					
					x	**H** xx				
						SD xx				
						x	**H** xx	xx	xx	xx
							SD xx			

Legends:

	Refer to lane closure charts
x	The full width of the traveled way shall be open for use by public traffic after 5 A.M.
xx	The full width of the traveled way shall be open for use by public traffic.
xxx	The full width of the traveled way shall be open for use by public traffic until 11 P.M.
H	Designated Legal Holiday
SD	Special Day

DocuSign Envelope ID: 894511EA-295B-49EB-A393-D26A6837FDD4

Replace "Reserved" in section 12-4.05B with:

Chart No. 1
Freeway/Expressway Lane Requirements

County: Alameda and Contra Costa	Route/Direction: I-680 Northbound	PM: ALA-680 PM 20.08 and CC-680 PM 0.19

Closure Limits: NB Mainline between 1500' south of WB Route 580/ NB Route 680 Connector On-Ramp and postmile 0.19 (Alcosta Blvd overcrossing)

FROM HOUR TO HOUR	24	1	2	3	4	5	6	7	8	9	10	11	12	13	14	15	16	17	18	19	20	21	22	23	24
Mondays through Thursdays	2	2	2	2	2	N	N	N	N	S	3	3	S	S	S	N	N	N	N	3	3	2	2	2	
Fridays	2	2	2	2	2	N	N	N	N	S	S	S	S	N	N	N	N	N	N	S	3	3	2	2	
Saturdays	2	2	2	2	2	2	2	3	3	S	S	N	N	N	N	N	N	N	S	3	3	3	3	2	
Sundays	2	2	2	2	2	2	2	2	2	3	S	S	S	S	S	S	S	S	S	S	3	2	2	2	

Legend:

2	Provide at least two through freeway lane open in direction of travel
3	Provide at least three through freeway lane open in direction of travel
S	Shoulder closure permitted (right/left)
N	No work permitted

REMARKS: This lane closure chart is prepared for the purpose of work consisting of installing fiber optic cable, conduit, and pull boxes in the left and right shoulders.

DocuSign Envelope ID: 894511EA-295B-49EB-A393-D26A6837FDD4

Chart No. 2
Freeway/Expressway Lane Requirements

County: Alameda and Contra Costa	Route/Direction: I-680 Northbound	PM: CC-680 PM 0.19 and CC-680 PM 10.37

Closure Limits: NB Mainline between postmile 0.19 (Alcosta Blvd overcrossing) and postmile 10.37 (Stone Valley Road undercrossing)

FROM HOUR TO HOUR	24	1	2	3	4	5	6	7	8	9	10	11	12	13	14	15	16	17	18	19	20	21	22	23	24
Mondays through Thursdays	2	2	2	2	2	N	N	N	N	N	S	S	S	N	N	N	N	N	N	S	3	2	2	2	
Fridays	2	2	2	2	2	N	N	N	N	S	S	N	N	N	N	N	N	N	S	S	3	3	2	2	
Saturdays	2	2	2	2	2	2	2	2	3	S	N	N	N	N	N	N	N	N	S	3	3	3	3	2	
Sundays	2	2	2	2	2	2	2	2	2	3	S	S	S	S	S	S	S	S	S	3	3	2	2	2	

Legend:

2	Provide at least two through freeway lane open in direction of travel
3	Provide at least three through freeway lane open in direction of travel
S	Shoulder closure permitted (right/left)
N	No work permitted

REMARKS: This lane closure chart is prepared for the purpose of work consisting of installing fiber optic cable, conduit, and pull boxes in the left and right shoulders.

DocuSign Envelope ID: 894511EA-295B-49EB-A393-D26A6837FDD4

Chart No. 3
Freeway/Expressway Lane Requirements

County: Alameda and Contra Costa	Route/Direction: I-680 Northbound	PM: CC-680 PM 10.37 and CC-680 PM 12.61

Closure Limits: NB Mainline between postmile 10.37 (Stone Valley Road undercrossing) and postmile 12.61 (Rudgear Road undercrossing)

FROM HOUR TO HOUR	24	1	2	3	4	5	6	7	8	9	10	11	12	13	14	15	16	17	18	19	20	21	22	23	24
Mondays through Thursdays	3	3	3	3	3	N	N	N	N	N	N	N	N	N	N	N	N	N	N	N	S	S	3	3	
Fridays	3	2	2	2	3	N	N	N	N	N	N	N	N	N	N	N	N	N	N	N	S	S	S	3	
Saturdays	3	3	2	2	2	3	3	S	N	N	N	N	N	N	N	N	N	N	N	N	S	S	S	S	
Sundays	3	3	3	3	3	3	3	3	S	N	N	N	N	N	N	N	N	N	N	S	S	S	3	3	

Legend:

2	Provide at least two through freeway lane open in direction of travel
3	Provide at least three through freeway lane open in direction of travel
S	Shoulder closure permitted (right/left)
N	No work permitted

REMARKS: This lane closure chart is prepared for the purpose of work consisting of installing fiber optic cable, conduit, and pull boxes in the left and right shoulders.

DocuSign Envelope ID: 894511EA-295B-49EB-A393-D26A6837FDD4

Chart No. 4
Freeway/Expressway Lane Requirements

County: Alameda and Contra Costa	Route/Direction: I-680 Northbound	PM: CC-680 PM 12.61 and CC-680 PM 22.70

Closure Limits: NB Mainline between postmile 12.61 (Rudgear Road undercrossing) and postmile 22.70 (Arthur Road undercrossing)

FROM HOUR TO HOUR	24	1	2	3	4	5	6	7	8	9	10	11	12	13	14	15	16	17	18	19	20	21	22	23	24
Mondays through Thursdays	2	2	2	2	2	N	N	N	N	N	S	S	N	N	N	N	N	N	N	S	S	4	3	3	
Fridays	2	2	2	2	2	N	N	N	N	S	S	N	N	N	N	N	N	N	N	N	S	S	4	3	
Saturdays	2	2	2	2	2	2	2	2	S	S	N	N	N	N	N	N	N	N	S	S	4	4	4	4	
Sundays	3	2	2	2	2	2	2	2	3	4	S	S	S	N	N	N	N	S	S	S	4	4	3	2	

Legend:

2	Provide at least two through freeway lane open in direction of travel
3	Provide at least three through freeway lane open in direction of travel
4	Provide at least four through freeway lane open in direction of travel
S	Shoulder closure permitted (right/left)
N	No work permitted

REMARKS: This lane closure chart is prepared for the purpose of work consisting of installing fiber optic cable, conduit, and pull boxes in the left and right shoulders.

DocuSign Envelope ID: 894511EA-295B-49EB-A393-D26A6837FDD4

Chart No. 5
Freeway/Expressway Lane Requirements

County: Alameda and Contra Costa	Route/Direction: I-680 Northbound	PM: CC-680 PM 22.70 and CC-680 PM 25.04

Closure Limits: NB Mainline between postmile 22.70 (Arthur Road undercrossing) and postmile 25.04 (Benicia Bridge Toll Plaza)

FROM HOUR TO HOUR	24	1	2	3	4	5	6	7	8	9	10	11	12	13	14	15	16	17	18	19	20	21	22	23	24
Mondays through Thursdays	N	N	N	N	N	N	N	N	N	N	3	3	3	3	3	N	N	N	N	N	N	N	N	N	
Fridays	N	N	N	N	N	N	N	N	N	N	3	3	3	S	S	N	N	N	N	N	N	N	N	N	
Saturdays	N	N	N	N	N	N	1	2	2	3	3	S	3	3	3	S	3	3	N	N	N	N	N	N	
Sundays	N	N	N	N	N	N	1	1	2	2	3	3	3	3	3	3	3	3	N	N	N	N	N	N	

Legend:

1	Provide at least one through freeway lane open in direction of travel
2	Provide at least two through freeway lane open in direction of travel
3	Provide at least three through freeway lane open in direction of travel
S	Shoulder closure permitted (right/left)
N	No work permitted

REMARKS: This lane closure chart is prepared for the purpose of work consisting of installing fiber optic cable, conduit, and pull boxes in the left and right shoulders. No night work permitted. Provide 2 weeks notice to Benicia-Martinez Toll Bridge Captain prior to start of work.

DocuSign Envelope ID: 894511EA-295B-49EB-A393-D26A6837FDD4

Chart No. 6
Freeway/Expressway Lane Requirements

County: Alameda and Contra Costa	Route/Direction: I-680 Southbound	PM: CC-680 PM 25.04 and CC-680 PM 22.70

Closure Limits: SB Mainline between postmile 25.04 (Benicia Bridge Toll Plaza) and postmile 22.70 (Arthur Road undercrossing)

FROM HOUR TO HOUR	24	1	2	3	4	5	6	7	8	9	10	11	12	13	14	15	16	17	18	19	20	21	22	23	24
Mondays through Thursdays	N	N	N	N	N	N	N	N	N	3	3	3	3	3	3	N	N	N	N	N	N	N	N	N	N
Fridays	N	N	N	N	N	N	N	N	N	3	3	3	3	3	3	N	N	N	N	N	N	N	N	N	N
Saturdays	N	N	N	N	N	N	2	2	2	2	2	2	2	2	2	2	2	2	N	N	N	N	N	N	N
Sundays	N	N	N	N	N	N	2	2	2	2	2	3	3	3	2	2	3	3	N	N	N	N	N	N	N

Legend:

2	Provide at least two through freeway lane open in direction of travel
3	Provide at least three through freeway lane open in direction of travel
N	No work permitted

REMARKS: This lane closure chart is prepared for the purpose of work consisting of installing fiber optic cable, conduit, and pull boxes in the left and right shoulders. No night work permitted.

Chart No. 7
Freeway/Expressway Lane Requirements

County: Alameda and Contra Costa	Route/Direction: I-680 Southbound	PM: CC-680 PM 22.70 and CC-680 PM 13.37

Closure Limits: SB Mainline between postmile 22.70 (Arthur Road undercrossing) and postmile 13.93 (Olympic Boulevard undercrossing)

FROM HOUR TO HOUR	24	1	2	3	4	5	6	7	8	9	10	11	12	13	14	15	16	17	18	19	20	21	22	23	24
Mondays through Thursdays	2	2	2	2	3	N	N	N	N	S	S	S	S	S	S	N	N	N	N	4	3	3	2	2	
Fridays	2	2	2	2	3	N	N	N	N	S	S	S	S	S	N	N	N	S	5	4	3	3	3	2	
Saturdays	2	2	2	2	2	2	3	4	5	S	S	S	S	S	S	S	N	S	S	4	4	3	3	2	
Sundays	2	2	2	2	2	2	2	3	3	5	5	S	S	S	S	S	S	S	5	4	3	3	2	2	

Legend:

2	Provide at least two through freeway lane open in direction of travel
3	Provide at least three through freeway lane open in direction of travel
4	Provide at least four through freeway lane open in direction of travel
5	Provide at least five through freeway lane open in direction of travel
S	Shoulder closure permitted (right/left)
N	No work permitted

REMARKS: This lane closure chart is prepared for the purpose of work consisting of installing fiber optic cable, conduit, and pull boxes in the left and right shoulders.

DocuSign Envelope ID: 894511EA-295B-49EB-A393-D26A6837FDD4

Chart No. 8
Freeway/Expressway Lane Requirements

County: Alameda and Contra Costa	Route/Direction: I-680 Southbound	PM: CC-680 PM 13.37 and CC-680 PM 10.93

Closure Limits: SB Mainline between postmile 13.93 (Olympic Boulevard undercrossing) and postmile 10.37 (Stone Valley Road undercrossing)

FROM HOUR TO HOUR	24	1	2	3	4	5	6	7	8	9	10	11	12	13	14	15	16	17	18	19	20	21	22	23	24
Mondays through Thursdays	2	2	2	2	2	N	N	N	N	N	N	N	N	N	N	N	N	N	N	S	3	2	2	2	
Fridays	2	2	2	2	2	N	N	N	N	N	N	N	N	N	N	N	N	N	N	S	3	3	2	2	
Saturdays	2	2	2	2	2	2	2	3	3	S	S	N	N	N	N	N	N	N	S	3	3	3	3	2	
Sundays	2	2	2	2	2	2	2	2	2	3	S	S	S	S	S	S	N	S	S	3	3	2	2	2	

Legend:

2	Provide at least two through freeway lane open in direction of travel
3	Provide at least three through freeway lane open in direction of travel
S	Shoulder closure permitted (right/left)
N	No work permitted

REMARKS: This lane closure chart is prepared for the purpose of work consisting of installing fiber optic cable, conduit, and pull boxes in the left and right shoulders.

Chart No. 9
Freeway/Expressway Lane Requirements

County: Alameda and Contra Costa	Route/Direction: I-680 Southbound	PM: CC-680 PM 10.93and CC-680 PM 0.19

Closure Limits: SB Mainline between postmile 10.37 (Stone Valley Road undercrossing) and postmile 0.19 (Alcosta Blvd overcrossing)

FROM HOUR TO HOUR	24	1	2	3	4	5	6	7	8	9	10	11	12	13	14	15	16	17	18	19	20	21	22	23	24
Mondays through Thursdays	2	2	2	2	2	N	N	N	N	N	N	S	S	S	N	N	N	N	N	4	3	2	2	2	
Fridays	2	2	2	2	2	N	N	N	N	N	N	N	N	N	N	N	N	N	N	3	3	2	2	2	
Saturdays	2	2	2	2	2	2	2	3	3	S	S	N	N	N	N	N	N	N	S	3	3	3	2	2	
Sundays	2	2	2	2	2	2	2	2	2	3	S	S	N	N	N	N	N	S	S	3	3	2	2	2	

Legend:

2	Provide at least two through freeway lane open in direction of travel
3	Provide at least three through freeway lane open in direction of travel
4	Provide at least four through freeway lane open in direction of travel
S	Shoulder closure permitted (right/left)
N	No work permitted

REMARKS: This lane closure chart is prepared for the purpose of work consisting of installing fiber optic cable, conduit, and pull boxes in the left and right shoulders.

DocuSign Envelope ID: 894511EA-295B-49EB-A393-D26A6837FDD4

Chart No. 10
Freeway/Expressway Lane Requirements

County: Alameda and Contra Costa	Route/Direction: I-680 Southbound	PM: CC-680 PM 0.19 and ALA-680

Closure Limits: SB Mainline between postmile 0.19 (Alcosta Blvd overcrossing) and 1500' south of WB Route 580/NB Route 680 Connector On-ramp

FROM HOUR TO HOUR	24	1	2	3	4	5	6	7	8	9	10	11	12	13	14	15	16	17	18	19	20	21	22	23	24
Mondays through Thursdays	2	2	2	2	2	N	N	N	N	S	S	S	S	S	S	N	N	N	N	4	4	3	2	2	
Fridays	2	2	2	2	2	N	N	N	N	S	S	S	S	S	N	N	N	N	N	5	4	3	3	2	
Saturdays	2	2	2	2	2	2	2	2	4	5	S	S	S	S	S	S	S	S	S	4	3	3	3	2	
Sundays	2	2	2	2	2	2	2	2	3	4	5	S	S	S	S	S	S	S	S	5	4	3	3	2	2

Legend:

2	Provide at least two through freeway lane open in direction of travel
3	Provide at least three through freeway lane open in direction of travel
4	Provide at least four through freeway lane open in direction of travel
5	Provide at least five through freeway lane open in direction of travel
S	Shoulder closure permitted (right/left)
N	No work permitted

REMARKS: This lane closure chart is prepared for the purpose of work consisting of installing fiber optic cable, conduit, and pull boxes in the left and right shoulders.

DocuSign Envelope ID: 894511EA-295B-49EB-A393-D26A6837FDD4

The following table is applicable for local agency traffic control:

Agency	Restrictions	Notes
City of Walnut Creek	Daytime closures on Ygnacio Valley Road between the hours of 9AM – 3PM. No more than 1 lane of traffic in each direction may be closed. Daytime work zone setup (non lane closures) along Ygnacio Valley Road may only occur between the hours of 7AM – 6PM. Night time lane (10PM-5AM) closures and work zone setup along Ygnacio Valley Road will require a special permit. More than 1 lane of traffic in each direction may be closed.	Mandatory pre-construction meeting with City prior to commencement of work. Contractor shall be responsible for obtaining all necessary construction permits.

Replace "Reserved" in section 12-5 with:

12-5.01 GENERAL

Section 12-5 includes specifications for closing traffic lanes, ramps, or a combination, with stationary lane closures on multilane highways. The traffic control system for a lane closure or a ramp closure must comply with the details shown.

Traffic control system includes signs.

12-5.02 MATERIALS

Not Used

12-5.03 CONSTRUCTION

Each vehicle used to place, maintain, and remove components of a traffic control system on a multilane highway must be equipped with a Type II flashing arrow sign that must be in operation whenever the vehicle is being used for placing, maintaining, or removing the components. Vehicles equipped with a Type II flashing arrow sign not involved in placing, maintaining, or removing the components if operated within a stationary-type lane closure must display only the caution display mode. The sign must be controllable by the operator of the vehicle while the vehicle is in motion. If a flashing arrow sign is required for a lane closure, the flashing arrow sign must be operational before the lane closure is in place.

For multilane freeway or expressway lane closures, do not place the 2L tangent section shown along lane lines between the lane closure tapers.

DocuSign Envelope ID: 894511EA-295B-49EB-A393-D26A6837FDD4

For multilane freeways and expressways, do not place the traffic cones shown to be placed transversely across closed traffic lanes and shoulders.

Whenever components of the traffic control system are displaced or cease to operate or function as specified from any cause, immediately repair the components to the original condition or replace the components and restore the components to the original location.

For a stationary lane closure, ramp closure, or a combination, made only for the work period, remove the components of the traffic control system from the traveled way and shoulder, except for portable delineators placed along open trenches or excavation adjacent to the traveled way at the end of each work period. You may store the components at selected central locations designated by the Engineer within the limits of the highway.

12-5.04 PAYMENT

Flagging costs are paid for as specified in section 12-1.03.

Traffic control system for lane closure is paid for as traffic control system. Flagging costs are paid for as specified in section 12-1.03.

Traffic control system for lane closure is paid for as traffic control system.

The requirements in section 4-1.05 for payment adjustment do not apply to traffic control system. Adjustments in compensation for traffic control system will be made for an increase or decrease in traffic control work if ordered and will be made on the basis of the cost of the necessary increased or decreased traffic control. The adjustment will be made on a force account basis for increased work and estimated on the same basis in the case of decreased work.
A traffic control system required by change order work is paid for as a part of the change order work.

DocuSign Envelope ID: 894511EA-295B-49EB-A393-D26A6837FDD4

^^^

DocuSign Envelope ID: 894511EA-295B-49EB-A393-D26A6837FDD4

14-6.02C(2) Protective Radius

Upon discovery of a regulated species, stop construction activities within a 50-foot radius of the discovery or as defined in the table below. Immediately notify the Engineer. Do not resume activities until receiving notification from the Engineer.

Regulated species name	Protective radius
Raptors	300 feet
Owls	300 feet
Bats	100 feet

14-6.02C(3) Protocols

Not Used

14-6.02C(4) Biological Resource Information

Not Used

14-6.02C(5) Protection Measures

Within species protection area SPA, implement the following protection measures:

1. All work will occur between July 1 and November 15 of each year.

2. Temporary Fence (Type ESA) shall be erected and maintained per plan sheet E-63.

3. You must notify the Engineer at least 30 working days before the start of construction to allow for preconstruction surveys.

4. All vehicle parking, staging, laydown areas, and construction operations will occur on existing pavement.

5. Nighttime construction lighting will be directed away from McNabney Marsh.

Within Project Limits, implement the following protection measures:

1. Nesting Bird Protection, Bird Nest Removal and Bird Nest Prevention:
   1.1. Submit Bird Nesting Removal and Prevention Plan (2 copies) to the Engineer for review 15 days after contract approval. Allow 15 days for review and approval of the plan. If revisions are required, revise and resubmit the plan within 10 days of receipt of the Engineer's comments and allow 5 days for review and approval of the revisions. Do not proceed with work until the plan is approved.

   The plan must describe:
   1. Locations of work.
   2. Nesting removal, prevention, inspection and maintenance methods.
   3. Equipment used.

DocuSign Envelope ID: 894511EA-295B-49EB-A393-D26A6837FDD4

4. Schedule for removing nests and installing exclusion devices.

When authorized, you may perform pruning, vegetation removal, and ground disturbing work from February 15 to September 1 (breeding season) of each year.

1.2. Notify the Engineer 10 days before the start of construction to request a preconstruction bird survey. BAIFA's Biologist will perform the survey of the job site to determine the presence of nesting birds in the area. If the survey determines the absence of nesting birds, pruning, vegetation removal, or ground disturbing work may be performed within 72 hours of the survey upon the Engineer's authorization.

1.3. After 72 hours, BAIFA's Biologist must perform another bird survey before pruning, vegetation and ground disturbing work can occur. Request a new bird survey 7 days before continuing pruning, vegetation removal, or ground disturbing work.

1.4. If you discover a nest, stop the work within the protective radius immediately and notify the Engineer. Do not disturb-nests occupied by birds, hatchlings or eggs. Do not resume work until directed in writing by the Engineer.

2. Before performing any work at the job site, all construction personnel must complete a training provided by BAIFA's Biologist, that communicates details of the permit requirements and the project area wildlife species information. Notify the Engineer 15 days before starting work to coordinate initial training. On completing the training, the construction personnel must sign a form stating that they completed the training. Submit this form as an informational submittal.

3. Contractors must report immediately to the Engineer any information about observations, take, or suspected take of regulated wildlife species.

4. Cover all excavated, steep-walled holes or trenches more than 1-foot deep at the close of each working day with plywood or similar materials, or install one or more escape ramps constructed of earth fill or wooden planks to prevent entrapment of animals.

5. All vehicle parking, staging, laydown areas, and access within the project limits must be submitted for authorization.

14-6.02C(6) Monitoring Schedule

Not Used

14-6.02D Payment

Not Used

Replace "Reserved" in section 14-6.06 with:

14-6.06A General

14-6.06A(1) Summary

Section 14-6.06 includes specifications for areas that have species protection requirements.

DocuSign Envelope ID: 894511EA-295B-49EB-A393-D26A6837FDD4

Species protection areas (SPAs) within the project limits are shown:

Species Protection Areas

Identification	Location
SPA	All areas shown on Plan Sheets E-62 and E-63.
Project Limits	Entire Project Limits

14-6.06B Materials

Not Used

14-6.06C Construction

Not Used

14-6.06D Payment

Not Used

^^

15 EXISTING FACILITIES

Replace "Reserved" in section 15-1.03C with:

The existing inductive loop detectors shown on the plans must remain in place and operational.

If you damage part of a loop conductor including an adjacent loop and the portion leading to the adjacent pull box, replace the entire loop detector within 2 weeks of damage.

^^

19 EARTHWORK

Replace the 2nd, 3rd, and 4th paragraphs of section 19-2.03B with:

Dispose of surplus material. Ensure enough material is available to complete the embankments before disposing of it.

DocuSign Envelope ID: 894511EA-295B-49EB-A393-D26A6837FDD4

^^

DIVISION V SURFACING AND PAVEMENTS

39 HOT MIX ASPHALT

Replace "Reserved" in section 39-2.02C of the RSS for section 39 with:

The grade of asphalt binder for Type A HMA must be PG 64-10.

^^

DocuSign Envelope ID: 894511EA-295B-49EB-A393-D26A6837FDD4

DIVISION IX TRAFFIC CONTROL FACILITIES

86 ELECTRICAL SYSTEMS

Add to the end of the 1st paragraph of the RSS for section 86-1.01:

This work is shown on plan sheets labeled E. The work involved in each bid item is shown on a sheet with a title matching the bid item description except for the following bid items:

1. Maintaining the existing traffic management system during construction.

Add to the list in the 5th paragraph of the RSS for section 86-1.03:

14. Fiber optic pull boxes
15. Fiber optic splice vault
16. Splice Closures

Replace "Reserved" in section 86-1.06B with:

Traffic Management System (TMS) elements include, but are not limited to ramp metering (RM) system, communication system, traffic monitoring stations, video image vehicle detection system (VIVDS), microwave vehicle detection system (MVDS), loop detection system, changeable message sign (CMS) system, extinguishable message sign (EMS) system, highway advisory radio (HAR) system, closed circuit television (CCTV) camera system, roadway weather information system (RWIS), visibility sensor, and fiber optic system.

Existing TMS elements, including detection systems, shown and located within the project limits must remain in place and be protected from damage. If the construction activities require existing TMS elements to be nonoperational or off line, and if temporary or portable TMS elements are not shown, the Contractor must provide for temporary or portable TMS elements. The Contractor must receive authorization on the type of temporary or portable TMS elements and installation method.

Before work is performed, the Engineer, the Contractor, and the Department's Traffic Operations Electrical representatives must jointly conduct a pre-construction operational status check of all existing TMS elements and each element's communication status with the Traffic Management Center (TMC), including existing TMS elements not shown and elements that may not be impacted by the Contractor's activities. The Department's Traffic Operations Electrical representatives will certify the TMS elements' location and status, and provide a copy of the certified list of the existing TMS elements within the project limits to the Contractor. The status list will include the operational, defined as having full functionality, and the nonoperational components.

The Contractor must obtain authorization at least 72 hours before interrupting existing TMS elements' communication with the TMC that will result in the elements being nonoperational or off line. The Contractor must notify the Engineer at least 72 hours before starting excavation activities.

DocuSign Envelope ID: 894511EA-295B-49EB-A393-D26A6837FDD4

Traffic monitoring stations and their associated communication systems, which were verified to be operational during the pre-construction operational status check, must remain operational on freeway/highway mainline at all times, except:

1. For a duration of up to 15 days on any continuous segment of the freeway/highway longer than 3 miles
2. For a duration of up to 60 days on any continuous segment of the freeway/highway shorter than 3 miles

If the construction activities require existing detection systems to be nonoperational or off line for a longer time period or the spacing between traffic monitoring stations is more than the specified criteria above, and temporary or portable detection operations are not shown, the Contractor must provide provisions for temporary or portable detection operations. The Contractor must receive authorization on the type of detection and installation before installing the temporary or portable detection.

If existing TMS elements shown or identified during the pre-construction operational status check, except traffic monitoring stations, are damaged or fail due to the Contractor's activity, where the elements are not fully functional, the Engineer must be notified immediately. If the Contractor is notified by the Engineer that existing TMS elements have been damaged, have failed or are not fully functional due to the Contractor's activity, the damaged or failed TMS elements, excluding structure-related elements, must be repaired or replaced, at the Contractor's expense, within 24 hours. For a structure-related elements, the Contractor must install temporary or portable TMS elements within 24 hours. For nonstructure-related TMS elements, the Engineer may authorize temporary or portable TMS elements for use during the construction activities.

If fiber optic cables are damaged due to the Contractor's activities, the Contractor must install new fiber optic cables from an original splice point or termination to an original splice point or termination, unless otherwise authorized. Fiber optic cable must be spliced at the splice vaults if available. The amount of new fiber optic cable slack in splice vaults and the number of new fiber optic cable splices must be equivalent to the amount of slack and number of splices existing before the damage or as directed by the Engineer. Fusion splicing will be required.

The Contractor must demonstrate that repaired or replaced elements operate in a manner equal to or better than the replaced equipment. If the Contractor fails to perform required repairs or replacement work, the Department may perform the repair or replacement work and the cost will be deducted from monies due to the Contractor.

A TMS element must be considered nonoperational or off line for the duration of time that active communications with the TMC is disrupted, resulting in messages and commands not transmitted from or to the TMS element.

The Contractor must provide provisions for replacing existing TMS elements within the project limits, including detection systems, that were not identified on the plans or during the pre-construction operational status check that became damaged due to the Contractor's activities.

If the pre-construction operational status check identified existing TMS elements, then the Contractor, the Engineer, and the Department's Traffic Operations Electrical representatives must jointly conduct a post construction operational status check of all existing TMS elements and each element's communication status with the TMC. The Department's Traffic Operations Electrical representatives will certify the TMS elements' status and provide a copy of the

DocuSign Envelope ID: 894511EA-295B-49EB-A393-D26A6837FDD4

certified list of the existing TMS elements within the project limits to the Contractor. The status list will include the operational, defined as having full functionality, and the nonoperational components. TMS elements that cease to be functional between pre and post construction status checks must be repaired at the Contractor's expense.

The Engineer will authorize the schedule for final replacement, the replacement methods and the replacement elements, including element types and installation methods before repair or replacement work is performed. The final TMS elements must be new and of equal or better quality than the existing TMS elements.

Furnishing and installing temporary or portable TMS elements that are not shown, but are required when an existing TMS element becomes nonoperational or off line due to construction activities, is change order work.

Furnishing and installing temporary or portable TMS elements and replacing TMS elements that are not shown nor identified during the pre-construction operational status check and were damaged by construction activities is change order work.

If the Contractor is required to submit provisions for the replacement of TMS elements that were not identified, submitting the provisions is change order work.

Add to section 86-2.05A:

Conduit installed underground must be Type 1 or Type 3.

Conduit directionally drilled through existing cellular concrete or expanded polystyrene blocks must be Schedule 80 HDPE.

86-2.05A(1) Conduit Sealing Plugs

Except as otherwise noted, all conduits shall have their ends sealed with commercial preformed plugs which prevent the passage of gas, dust and water into these conduits and their included innerducts. Sealing plugs shall be installed within each splice vault, pull box, cabinet, or building.

Sealing plugs shall be removable and reusable. Plugs sealing conductor or cable shall be the split type that permits installation or removal without removing conductors or cables.

Sealing plugs that seal between the four-inch fiber optic conduit shall seal the conduit simultaneously with one self-contained assembly having an adjustable resilient filler of polyurethane elastomer clamped between backing ends and compressed with stainless steel hardware. Sealing plugs shall be capable of withstanding a pressure of 5 psi.

To provide suitable sealing between the varying size cables and the plugs, split polyurethane elastomer adapting sleeves, used singularly or in multiples, shall be inserted within the body of the plugs.

A sealing plug that seals an empty conduit shall have an eye or other type of capturing device (on the side of the plug that enters the conduit) to attach onto the pull tape, so the pull tape will be easily accessible when the plug is removed.

DocuSign Envelope ID: 894511EA-295B-49EB-A393-D26A6837FDD4

86-2.05A(2) Warning Tape

Warning tape shall be furnished, installed and placed in the trench over conduits to receive communication fiber optic cable, as shown on the plans.
The warning tape shall have:

WARNING TAPE PROPERTIES

Description	Parameters
Thickness	Not be less than .1 mm thick
Width	4 inches
Material	Orange color polyolefin film
Tensile Strength	Minimum of 160 lb force
Elongation	Minimum of 700 percent elongation before breakage
Printed Text Height	One inch black color
Message Statement	CAUTION: BURIED FIBER OPTIC CABLE – BAIFA/CALTRANS (XXX) XXX-XXXX
Message Spacing Intervals	Approximately three feet

The printed warning must not be removed by the normal handling and burial of the tape and shall be rated to last the service life of the tape.

The construction of the warning tape shall be such that it will not delaminate when it is wet. It must be resistant to insects, acid, alkaline and other corrosive elements in the soil.

Warning tape shall be manufactured by Condux International, Inc., Allen System, Inc., Reef Industries, Inc. or equal.

86-2.05A(3) Cable Markers

Cable markers shall be provided as shown in the on Sheet E-87 of the design plans. These markers shall conform to Standard Plan A73C, Class 1, Type F, flexible post delineators, except that the marker shall be non-reflective. The following text shall be written on each marker: "WARNING, FIBER OPTIC CABLE, call 72 Hours before You Dig, 1-510-286-4444, COMMUNICATIONS". See details on the plans.

86-2.05A(4) Tracer Wire

Tracer wire shall be provided and placed in the conduits containing fiber optic cable.

Tracer wire shall be No. 8 stranded, minimum, copper conductor with type TW, THW, RHW, or USE insulation. The tracer wire shall form a mechanically and electrically continuous line throughout the length of the trench. A minimum of five feet of slack shall be extended into each pull box and splice vault from each direction. The wires shall be carefully placed so as not to be damaged by backfilling operations.

Conduit entering or exiting a reinforced concrete structure will not require tracer wire to the first pull box or fiber optic splice box. Tracer wire may be spliced at intervals of not less than 500 feet

DocuSign Envelope ID: 894511EA-295B-49EB-A393-D26A6837FDD4

and in pull boxes. Splices shall conform to the provisions in Section 86-2.09, "Wiring", of the Standard Specifications.

Add to section 86-2.05B:

The conduit in a foundation and between a foundation and the nearest pull box must be Type 1 or Type 3.

Add to section 86-2.05C:

If a standard coupling cannot be used for joining Type 1 conduit, use a UL-listed threaded union coupling under section 86-2.05C, a concrete-tight split coupling, or a concrete-tight set screw coupling.

If Type 3 conduit is placed in a trench, not in the pavement or under concrete sidewalk, after the bedding material is placed and the conduit is installed, backfill the trench to not less than 4 inches above the conduit with minor concrete under section 90-2, except the concrete must contain not less than 421 pounds of cementitious material per cubic yard. Backfill the remaining trench to finished grade with backfill material.

After conductors have been installed, the ends of the conduits terminating in pull boxes, service equipment enclosures, and controller cabinets must be sealed with an authorized type of sealing compound.

At those locations where conduit is required to be installed under pavement and underground facilities designated as high priority subsurface installation under Govt Code § 4216 et seq. exist, conduit must be placed by the trenching in pavement method under section 86-2.05C.

At other locations where conduit is required to be installed under pavement and if a delay to vehicles will not exceed 5 minutes, conduit may be installed by the trenching in pavement method.

The final 2 feet of conduit entering a pull box in a reinforced concrete structure may be Type 4.

Add to section 86-2.05C:

86-2.05C(2) Directional Boring Method of Installation

Install conduit by the directional boring method with the approval of the Engineer as shown.

Notify the Engineer 2 working days before starting directional boring operations.

Include the location and the equipment to be used in the advance notice to the Engineer.

Perform directional boring operations in the presence of the Engineer, unless otherwise notified by the Engineer.

Install conduit to a minimum depth of 2 ft-8 in below finished grade.

The diameter of the boring tool must not exceed 1.5 times the outside diameter of the conduit. Use only mineral slurry or wetting solution to lubricate the boring tool and to stabilize the soil surrounding the boring path. Mineral slurry or wetting solution must be water based and environmentally safe.

DocuSign Envelope ID: 894511EA-295B-49EB-A393-D26A6837FDD4

Comply with Section 86-5.01A(4) for disposing residue from directional boring operations.

The directional boring equipment must:

1. Have directional control of the boring tool
2. Have an electronic tool location detection system
3. Be equipped with a tension measuring device that indicates the amount of tension exerted on conduit during conduit pulling operations.

During operation, the directional bore equipment must be able to determine the location of the tool both horizontally and vertically.

Provide a layout and a profile plot to the Engineer showing the location of the bore to a scale of 6 inches.

You must have direct charge and control of the directional bore operation at all times.

Do not use slurry cement backfill where the directional boring method is used.

Reform schedule 40 conduit with a mandrel after installation.

Add to section 86-2.05C:

Install conduit by the directional boring method when cellular concrete or expanded polystyrene as indicated on the plans. You must use a drill head that can cleanly cut through this material.

Slurry seal must be injected into the drilled hole once conduit has been installed.
Slurry Seal shall consist of a mixture as approved by the Engineer. Slurry seal mixture shall be designed to maintain the overall strength of the cellular concrete and expanded polystyrene blocks and shall be of equal or greater strength.

Use practices to prevent the discharge of slurry cement material into storm drain systems and receiving waters. Cover drainage inlets during the application of slurry seal. You shall remove any debris associated with the performance of the work on a daily basis.

Add to Section 86-2.06A.

Each fiber optic pull box shall conform to requirements for type 6 with extensions and as shown on the plans. Pull box cover and extensions may be constructed of reinforced portland cement concrete or of non-PCC material with concrete gray color.

86-2.06A(1) Fiber Optic Splice Vault

Fiber optic splice vaults shall be 52" (L) x 34" (W) x 30" (D) nominal inside dimensions. Covers shall be in one or two sections. Hold down bolts or cap screws and nuts shall be of brass, stainless steel or other non-corroding metal material. Each cover portion shall have inset lifting pull slots. Cover marking shall be “BAIFA TOS COMMUNICATION” on the cover. Vault, cover and extensions may be constructed of reinforced portland cement concrete or of non-PCC material with concrete gray color.

DocuSign Envelope ID: 894511EA-295B-49EB-A393-D26A6837FDD4

Metallic or non-metallic cable racks shall be installed on the interior of both long sides of the fiber optic vaults. The racks shall be capable of supporting a load of 100 lb., minimum, per rack arm. Racks shall be supplied in lengths appropriate to the box in which they will be placed. All metallic cable racks shall be fabricated from ASTM Designation: A36 steel plate and shall be hot-dip galvanized after fabrication. Steel plate, hardware and galvanizing shall be in accordance with the requirements of Section 75, "Miscellaneous Metal", of the Standard Specifications. Metallic cable racks shall be bonded and grounded.

Replace the 3rd paragraph in section 86-2.06A(2) of the RSS for section 86-2.06 with:

In a ground or sidewalk area, embed the bottom of a pull box in crushed rock.

Add to Section 86-2.06B.

86-2.06B(1) Fiber Optic Splice Vault

Cover marking shall be "BAIFA TOS COMMUNICATION" on the cover.

Replace "Reserved" in section 86-2.06B of the RSS for section 86-2.06 with:

86-2.06B(1) General

86-2.06B(1)(a) Summary

Section 86-2.06B includes specifications for installing non-traffic-rated pull boxes.

86-2.06B(1)(b) Submittals

Before shipping pull boxes to the job site, submit a list of materials used to fabricate the pull boxes to METS. Include:

1. Contract number
2. Manufacturer's name
3. Manufacturer's installation instructions
4. Your contact information

Submit reports for pull boxes from an NRTL-accredited laboratory.
Before installing a pull box and cover, submit the manufacturer's replacement warranty for them.

86-2.06B(1)(c) Quality Control and Assurance

86-2.06B(1)(c)(i) Functional Testing

The pull box and cover must be tested under ANSI/SCTE 77, "Specification for Underground Enclosure Integrity."

86-2.06B(1)(c)(ii) Warranty

Provide a 2-year manufacturer's replacement warranty for the pull box and cover. The warranty period starts on the date of Contract Acceptance.
Deliver replacement parts within 5 business days after you receive notification of a failed pull box, cover, or both to the Department's Maintenance Electrical Shop at:

CALTRANS MAINTENANCE STATION
30 RICKARD STREET
SAN FRANCISCO, CA 94134

86-2.06B(2) Materials

The pull box and cover must comply with ANSI/SCTE 77, "Specification for Underground Enclosure Integrity," for tier 22 load rating and must be gray or brown.

DocuSign Envelope ID: 894511EA-295B-49EB-A393-D26A6837FDD4

Each pull box cover must have an electronic marker cast inside.
A pull box extension must be made of the same material as the pull box and attached to the box to maintain the minimum combined depths.
Include recesses for a hanger if a transformer or other device must be placed in a pull box.
The bolts, nuts, and washers must be a captive design.
The captive bolt must be capable of withstanding a torque from 55 to 60 ft-lb and a minimum pull-out strength of 750 lb. Perform the test with the cover in place and the bolts torqued. The pull box and cover must not be damaged while performing the test.
Hardware must be stainless steel with 18 percent chromium and 8 percent nickel content.
Galvanize ferrous metal parts under section 75-1.05.

The manufacturer's instructions must include:
1. Quantity and size of entries that can be made without degrading the strength of the pull box below the tier 22 load rating
2. Locations where side entries cannot be made
3. Acceptable method for creating the entry

The tier 22 load rating must be labeled or stenciled by the manufacturer on the inside and outside of the pull box and on the underside of the cover.

86-2.06B(3) Construction

Do not install a pull box in curb ramps or driveways.
A pull box for a post or a pole standard must be located within 5 feet of the standard. Place the pull box adjacent to the back of the curb or edge of the shoulder. If this is impractical, place the pull box in a suitable, protected, and accessible location.
Cover the pull box with a plastic sheet and then bury it in soil from 6 to 8 inches below grade.
Plastic sheets must be 20 mil thick and made of HDPE or PVC virgin compounds.
If only the cover is to be replaced, anchor the cover to the pull box.

Add to Section 86-2.06C:

Conduits shall enter the fiber optic pull box through the sidewall at not more than 6 inches from the bottom of the pull box. Conduits shall not enter through the bottom of the pull box. Conduits shall not protrude more than two inches inside the pull box and shall enter the pull box at about 20 degrees in both the vertical and horizontal directions. Watertight sealing plugs as specified elsewhere in these special provisions are required around all conduits.

86-2.06C(1) Fiber Optic Splice Vault

Unless otherwise shown on the plans or as directed by the Engineer, vaults shall be located outside the pavement with the lid centerline five feet from the edge of the pavement or back of the dike. Vaults may be moved farther from the roadway to accommodate buried objects, existing conduits, or similar items that prevent installation 5 feet from the pavement, but no part of the vault, concrete encasement ring, or backfill material shall be less than 18 inches from the edge of the pavement or back of the dike, to allow for future electrical conduit installations between the vault and roadway.
The top of the vault lid shall match the final grade within one inch +/-0.5 inch.
Some locations along the roadway may have existing conduits, pipes, or drains parallel to the roadway and next to the shoulder, which may make it impossible to route conduits to the vault. At other locations, buried objects, steep drop-offs, or other object may make installation of a vault

DocuSign Envelope ID: 894511EA-295B-49EB-A393-D26A6837FDD4

outside the pavement impossible. At these locations or as directed by the Engineer, vaults may be installed in the pavement of the shoulder or in the pavement of chain on/off areas. Vaults placed inside the pavement shall be installed with the centerline of the vault not more 3 feet from the edge of pavement or back of dike, and with the entire top of vault lid 0.1 inch +/- 0.05 inch below the surface of the pavement, when all pavement work specified in the job is completed.

Vaults located at bridges where exposed conduit must be used, such as at undercrossings, shall be located as close as possible to the end of the structure unless otherwise specified on the plans, If not specified otherwise in the plans, the location of vaults at bridge structures shall be between the first and second guardrail posts. Unless otherwise directed by the Engineer, the top of the vault lid at these locations shall be located entirely behind the guardrail and shall conform to the final grade of the surrounding fill at the vault location. No part of the vault or vault lid shall be exposed or extend past the edge of the hinge point for the bridge, or otherwise deform the earth fill at the vault location.

Conduits shall enter the fiber optic vault through the sidewall at not more than 6 inches from the bottom of the vault. Conduits shall not enter through the bottom of the vault. Conduits shall not protrude more than two inches inside the pull box and shall enter the vault at about 20 degrees in both the vertical and horizontal directions. Watertight sealing plugs as specified elsewhere in these special provisions are required around all conduits.

Add to section 86-2.08A:

Wrap conductors around the projecting end of conduit in pull boxes as shown. Secure conductors and cables to the projecting end of the conduit in pull boxes.

Replace the 1st sentence of the 1st paragraph of section 86-2.08E with:

Signal interconnect cable must be the 3-pair 6-pair type with stranded tinned copper no. 20 conductors.

Add to section 86-2.11A:

Continuous welding of exterior seams in service equipment enclosures is not required.

Circuit breakers must be the cable-in/cable-out type mounted on non-energized clips. All circuit breakers must be mounted vertically with the up position of the handle being the "ON" position.

Circuits with Model 500 changeable message signs must have service equipment enclosures that have main busses and terminal lugs rated for 100 A, minimum, and a no. 2 bare copper ground wire.

Each service must be provided with up to 2 main circuit breakers that will disconnect ungrounded service entrance conductors. Where the "Main" circuit breaker consists of 2 circuit breakers as described, each of the circuit breakers must have a minimum interrupting capacity of 10,000 A, rms.

Replace item 9 in the list in the 5th paragraph of section 86-2.11A with:

Circuit breakers used as service disconnect equipment must have a minimum interrupting capacity of 42,000 A, rms, for 120/240 V(ac) services and 30,000 A, rms, for 480 V(ac) services.

Replace 7th and 8th paragraphs of section 86-2.11A with:

Service equipment enclosures must be the aluminum type.

DocuSign Envelope ID: 894511EA-295B-49EB-A393-D26A6837FDD4

Replace section 86-2.18 with:

Replace 1st paragraph of section 86-2.18 with:

Place numbers on the equipment as ordered.

Add Section 86-9:

86-9.01 FIBER-OPTIC CABLE, EQUIPMENT, AND SPLICING

86-9.01A General

86-9.01A(1) Summary

Fiber optic communication cable plant shall conform to the details shown on the plans and these special provisions.

86-9.01A(2) Definitions

Active Component Link Loss Budget - The active component link loss budget is the difference between the average transmitter launch power (in dBm) and the receiver maximum sensitivity (in dBm).

Backbone - Fiber cable that provides connections between the TMC and hubs, as well as between equipment rooms or buildings, and between hubs. The term is used interchangeably with "trunk" cable.

Breakout - The cable "breakout" is produced by (1) removing the jacket just beyond the last tie-wrap point, (2) exposing 3 to 6 feet of the cable buffers, aramid strength yarn and central fiberglass strength member, and (3) cutting aramid yarn, central strength member and the buffer tubes to expose the individual glass fibers for splicing or connection to the appropriate device.

Connector - A mechanical device used to align and join two fibers together to provide a means for attaching to and decoupling from a transmitter, receiver, or another fiber (i.e., patch panel).

Connectorized - A term that describes the termination point of a fiber after connectors have been affixed.

Connector Module Housing (CMH) - A patch panel used in the FDU to terminate single mode fibers with most common connector types. It may include a jumper storage shelf and a hinged door.

Couplers - Couplers are devices which mate two fiber optic connectors to facilitate the transition of optical light signals from one connector into another. Couplers may also be referred to as: adapters, feed-throughs, and barrels. They are normally located within FDUs mounted in panels. They may also be used unmounted, to join two simplex fiber runs.

Distribution Cable - Fiber cable that provides connections between hubs. Drop cables are typically spliced into a distribution cable.

End-to-End Loss - The maximum permissible end-to-end system attenuation is the total loss in a given link. This loss could be the actual measured loss, or calculated using typical (or

DocuSign Envelope ID: 894511EA-295B-49EB-A393-D26A6837FDD4

specified) values. A designer should use typical values to calculate the end-to-end loss for a proposed link. This number will determine the amount of optical power (in dB) needed to meet the System Performance Margin.

Fan Out Termination - Permits the branching of fibers contained in an optical cable into individual cables and can be done at field locations; thus, allowing the cables to be connectorized or terminated per system requirements. A kit provides pull-out protection for individual bare fibers to support termination. It provides three layers of protection consisting of a Teflon inner tube, a dielectric strength member, and an outer protective PVC jacket.

FBC - Fiber Backbone Cable.

Fiber Distribution Unit (FDU) - A rack mountable enclosure containing both a Connector Module Housing (CMH) and a Splice Module Housing (SMH).

Fiber Storage Enclosure (FSE) - Designed for holding excess cable slack for protection. The FSE allows the user flexibility in equipment location and the ability to pull cable back for resplicing.

F/O - Fiber optic.

FOIP - Fiber optic inside plant cable.

FOOP - Fiber optic outside plant cable.

FOTP - Fiber optic test procedure(s) as defined by TIA/EIA standards.

FPC - Fiber Pigtail Cable

FTC - Fiber Trunkline Cable

Light Source - A portable fiber optic test equipment that, in conjunction with a power meter, is used to perform end-to-end attenuation testing. It contains a stabilized light source operating at the designed wavelength of the system under test. It also couples light from the source into the fiber to be received at the far end by the receiver.

Link - A passive section of the system, the ends of which are connectorized. A link may include splices and couplers. For example, a video data link may be from video F/O transmitter to video F/O receiver.

Link Loss Budget - A calculation of the overall permissible attenuation from the fiber optic transmitter (source) to the fiber optic receiver (detector).

Loose Tube Cable - Type of cable construction in which fibers are placed in buffer tubes to isolate them from outside forces (stress). A flooding compound or material is applied to the interstitial cable core to prevent water migration and penetration. This type of cable is primarily for outdoor applications.

Mid-span Access Method - Description of a procedure in which fibers from a single buffer tube are accessed and spliced to an adjoining cable without cutting the unused fibers in the buffer tube, or disturbing the remaining buffer tubes in the cable.

MMFO - Multimode Fiber Optic Cable.

DocuSign Envelope ID: 894511EA-295B-49EB-A393-D26A6837FDD4

Optical Time Domain Reflectometer (OTDR) - Fiber optic test equipment similar in appearance to an oscilloscope that is used to measure the total amount of power loss in a F/O cable between two points. It provides a visual and printed display of the losses associated with system components such as fiber, splices and connectors.

Optical Attenuator - An optical element that reduces the intensity of a signal passing through it.

Patch Cord - A short jumper used to join two Connector Module Housing (CMH) couplers, and or a CMH and an active optical electronic device.

Pigtail - Relatively short length of fiber optic cable that is connectorized on only one end. All pigtails shall be tight buffer cable.

Power Meter - A portable fiber optic test equipment that, when coupled with a light source, is used to perform end-to-end attenuation testing. It contains a detector that is sensitive to light at the designed wavelength of the system under test. Its display indicates the amount of power injected by the light source that arrives at the receiving end of the link. **Segment** - A section of F/O cable that is not connected to any active device and may or may not have splices per the design.

Segment - A section of fiber optic cable that is not connected to any active device and may or may not have splices per the design.

SMFO - Single mode Fiber Optic Cable.

Splice - The permanent joining of two fiber ends using a fusion splicer.

Splice Closure - A environmentally sealed container used to organize and protect splice trays. The container allows splitting or routing of fiber cables from multiple locations. Normally installed in a splice vault.

Splice Module Housing (SMH) - A unit that stores splice trays as well as pigtails and short cable lengths. The unit allows splitting or routing of fiber cables from and to multiple locations.

Splice Tray - A container used to organize and protect spliced fibers.

Splice Vault - An underground container used to house excess cable and splice closures.

System Performance Margin - A calculation of the overall "End to End" permissible attenuation from the fiber optic transmitter (source) to the fiber optic receiver (detector). The system performance margin should be at least 6 dB. This includes the difference between the active component link loss budget, the passive cable attenuation (total fiber loss) and the total connector/splice loss.

Tight Buffer Cable - Type of non-breakout cable construction where each glass fiber is tightly buffered (directly coated) with a protective thermoplastic coating to 900 µm with the exception of the protective thermoplastic coating. The tight buffer cable shall meet all the characteristics of the fiber in the fiber optic outside plant cable specified elsewhere in these specifications.

DocuSign Envelope ID: 894511EA-295B-49EB-A393-D26A6837FDD4

86-9.01A(3) Submittals

You must submit complete product data including description and model number, shop drawings, catalog cuts, and technical literature for all fiber optic cable and equipment provided under this contract as part of your bid response package. Any manufacturer equipment specification which does not meet the performance requirements specified herein will require Owner prequalification and approval. Acceptability of the manufacturer will be based on the manufacturer's experience, qualifications, certifications (i.e. ISO-9001), equipment reliability, and compliance with standards specified herein and full compatibility with the existing system.

86-9.01A(4) Quality Control and Assurance

86-9.01A(4)(1) General

Testing shall include the tests on elements of the passive fiber optic components: 1) after delivery to the project site but prior to installation; 2) after installation but prior to connection to any other portion of the system, and 3) during final system testing. The active components shall be tested after installation. The Contractor shall provide all personnel, equipment, instrumentation, and materials necessary to perform all testing. The Engineer shall be notified two working days prior to all field tests. The notification shall include the exact location or portion of the system to be tested.

Documentation of all test results shall be provided to the Engineer within 2 working days after the test involved.

86-9.01A(4)(2) Factory Testing

Verification of the fiber specifications as listed in the Fiber Characteristics Table shall be supplied by the manufacturer with the appropriate documentation. Copies of the documentation shall be: 1) maintained on file by the manufacturer with a file identification number for a minimum of 7 years; 2) attached to the cable reel in a waterproof pouch; and 3) submitted by the Contractor to the Engineer.

86-9.01A(4)(3) Arrival On Site

The cable and reel shall be physically inspected on delivery and 100 percent of the fibers shall be attenuation tested to confirm that the cable meets requirements. Attenuation tests shall be performed with an OTDR capable of recording and displaying anomalies of 0.02 dB as a minimum. Single mode fibers (SM) shall be tested at 1310 nm and at 1550 nm. Test results shall be recorded, dated, compared and filed with the copy accompanying the shipping reel in a weather proof envelope. Attenuation deviations from the shipping records greater than 5 percent shall be brought to the attention of the Engineer. The cable shall not be installed until completion of this test sequence and the Engineer provides written approval. Copies of traces and test results shall be submitted to the Engineer. If the test results are unsatisfactory, the reel of FO cable shall be considered unacceptable and all records corresponding to that reel of cable shall be marked accordingly. The unsatisfactory reels of cable shall be replaced with new reels of cable at the Contractor's expense. The new reels of cable shall then be tested to demonstrate acceptability. Copies of the test results shall be submitted to the Engineer.

86-9.01A(4)(4) After Cable Installation

After the fiber optic cable has been pulled but before breakout and termination, 100 percent of all the fibers shall be tested with an OTDR for attenuation. Test results shall be recorded, dated, compared and filed with the previous copies of these tests. Copies of traces and test results shall be submitted to the Engineer. If the OTDR test results are unsatisfactory, the fiber optic cable segment will be unacceptable. The unsatisfactory segment of cable shall be replaced with a new

DocuSign Envelope ID: 894511EA-295B-49EB-A393-D26A6837FDD4

segment, without additional splices, at the Contractor's expense. The new segment of cable shall then be tested to demonstrate acceptability. Copies of the test results shall be submitted to the Engineer.

Attenuation tests shall be performed with an OTDR capable of recording and displaying anomalies of 0.02 dB as a minimum. Single mode fibers (SM) shall be tested at 1310 nm and at 1550 nm. Attenuation readings shall be recorded on a cable data sheet showing factory and after installation results.

The OTDR shall have a printer capable of producing a verifying test trace with fiber identification as shown in Appendix A "Link Loss Budget Work Sheet," numerical loss values, the date and the operator's name. It shall also have a DOS based 3.5" disk recording capability that has associated software to do comparisons and reproductions on 8.5" x 11" paper, via a personal computer.

86-9.01A(4)(5) Fiber Optic System Gain Margin

The installed system gain margin shall be at least 6 dB for each and every link. If the design system gain margin is less than 6 dB, the Engineer shall be notified and informed of the Contractor's plan to meet that requirement. Test results shall be recorded and submitted to the Engineer for approval.

86-9.01A(4)(6) Interconnecting Parts Testing And Documentation

All the components of the passive interconnecting parts (FDUs, pigtails, couplers and splice trays) shall be from a manufacturer who is regularly engaged in the production of the fiber optic components described.

Each ST termination shall be tested for insertion attenuation loss with the use of an optical power meter and source. In addition, all single mode terminations shall be tested for return reflection loss. These values shall meet the loss requirements specified earlier and shall be recorded on a tag attached to the pigtail or jumper.

Once interconnecting assembly is complete, the contractor shall visually verify that all tagging, including loss values, is complete. Then as a final quality control measure, the Contractor shall do an "end to end" optical power meter/light source test from pigtail end to jumper lead end to assure continuity and overall attenuation loss values.

The final test results shall be recorded, along with previous individual component values, on a special form assigned to each FDU. The completed form shall be dated and signed by the Contractor. One copy of this form will be attached in a plastic envelope to the assembled FDU unit. Copies will be provided separately to the Contractor and to the Engineer.

86-9.01A(4)(7) Active Component Testing

The transmitters and receivers shall be tested with a power meter and light source, to record the transmitter average output power (dBm) and receiver sensitivity (dBm). These values shall be recorded in the Link Loss Budget Worksheet shown in Appendix A.

86-9.01A(4)(8) System Verification at Completion

Once the passive cabling system has been installed and is ready for activation, 100 percent of the fiber links shall be tested with the OTDR for attenuation at both wavelengths. Test results shall be

DocuSign Envelope ID: 894511EA-295B-49EB-A393-D26A6837FDD4

recorded, dated, compared and filed with previous copies. A hard copy printout and a electronic copy of the traces and test results along with a licensed copy of the associated software on a minimun 4 GB USB version 2.0 flash drive or a Secure Digital card shall be submitted to the Engineer. If the OTDR test results are unsatisfactory the link shall be replaced at the Contractor's expense. The new link shall then be tested to demonstrate acceptability. Copies of the test results shall be submitted to the Engineer. The "Link Loss Budget Work Sheet" shown in Appendix A shall be completed for each link in the fiber optic system, using the data gathered throughout the installation process. The completed work sheets shall be included as part of the system documentation in the As-Built Plans.

The "Total System Gain" shall be calculated by subtracting the measured "Optical Receiver Sensitivity" (line 1B on the "Link Loss Budget Work Sheet") from the measured "Optical Transmitter Average Power" (line 1A), which were obtained using a power meter and source. The resulting difference shall be the maximum allowable loss between the transmitter and the receiver, within 0 percent to +10 percent of the manufacturers specified loss budget for the transmitter/receiver pair. The "Total System Gain" shall be recorded on line 1C.

The "Fiber Losses" for a link shall be calculated by multiplying the length of the fiber link (line 2A) by the normalized cable attenuation (dB/km, line 2B) at the operating wavelength. The normalized attenuation for this calculation shall be the maximum value throughout the operating temperature range of the cable. The product shall be recorded on line 2C.

The total connector losses shall be calculated by summing the individual attenuation values for each connector pair in the link, excluding the transmitter and receiver connectors. The sum shall be recorded on line 2D.

The total splice losses shall be calculated by summing the individual attenuation values for each splice in the link. The sum shall be recorded on line 2E.

The total of other losses shall be calculated by summing the individual attenuation values for each component in the link not previously addressed. The sum shall be recorded on line 2F. These items may include, but are not limited to, couplers, splitters, routers and switches.

The "Total System Loss" shall be recorded on line 2G of the "Link Loss Budget Work Sheet."
The "Design System Gain Margin" shall be calculated by subtracting the Total System Loss (line 2G) from the Total System Gain (line 1C). The resulting difference shall be recorded on line 3A. The Contractor's attention is directed to "F/O System Gain Margin," elsewhere in these special provisions.

At the conclusion of the final OTDR testing, 100 percent of all fiber links shall be tested end to end with a power meter and light source, in accordance with EIA Optical Test Procedure 171 and in the same wavelengths specified for the OTDR tests. These tests shall be conducted in both directions. Test results shall be recorded, compared and proven to be within the design link loss budgets, and filed with the other recordings of the same links. Test results shall be submitted to the Engineer.

If during any of these system verification tests, the results prove to be unsatisfactory, the F/O cable will not be accepted. The unsatisfactory segments of cable shall be replaced with a new segment

DocuSign Envelope ID: 894511EA-295B-49EB-A393-D26A6837FDD4

of cable at the Contractor's expense. The new segment of cable shall undergo the same testing procedure to determine acceptability. Copies of the test results shall be submitted to the Engineer. The removal and replacement of a segment of cable shall be interpreted as the removal and replacement of a single contiguous length of cable connecting two splices, two connectors, or a splice and a connector. The removal of only the small section containing the failure and therefore introducing new unplanned splices, will not be allowed.

LINK LOSS BUDGET

Contract No.:			
Contractor:			
Approved by Caltrans:			
Date:		Operator:	
Link Number:		Fiber Color:	
Buffer Color:		Cable No.:	
Test Wavelength (Circle One)		1310 nm	1550 nm
Section 1: Total System Gain		Value	Line No.
Measured Optical Transmitter Average Power:		dB	1A
Measured Optical Receiver Sensitivity (this should be a negative value):		dB	1B
Subtract line 1B from 1A to obtain Total System Gain:		dB	1C
Section 2: Total System Loss			
Measured length of the link:		km	2A
Measured loss per km of the fiber:		dB/km	2B
Multiply line 2A by 2B to obtain the Total Fiber Loss:		dB	2C
Sum of all Connector Losses in the link:		dB	2D
Sum of all Splice Losses in the link:			2E
Sum of all Other Losses from other components (couplers, splitters, routers, switches, etc.)		dB	2F
Add lines 2C, 2D, 2E and 2F to obtain Total System Loss:		dB	2G
Section 3: Design System Gain Margin			
Subtract line 2G from line 1C (This number must be at least 6 dB):		dB	3A

86-9.01B Materials

86-9.01B(1) General

Each fiber optic outside plant cable (FOOP) for this project shall be all dielectric, gel filled or water-blocking material, duct type, with loose buffer tube construction with a maximum outside

DocuSign Envelope ID: 894511EA-295B-49EB-A393-D26A6837FDD4

diameter of 0.55 inch and shall conform to these special provisions. Cables shall contain single mode (SM) dual-window (1310 nm and 1550 nm) fibers with the numbers described below and as shown on the plans:\

DocuSign Envelope ID: 894511EA-295B-49EB-A393-D26A6837FDD4

CABLE SIZES

Cable Size	Number and Type of Fibers
288 SMFO	288 SM Fibers
144 SMFO	144 SM Fibers
72 SMFO	72 SM Fibers
48 SMFO	48 SM Fibers
24 SMFO	24 SM Fibers
12 SMFO	12 SM Fibers
6 SMFO	6 SM Fibers

The optical fibers shall be contained within loose buffer tubes. The loose buffer tubes shall be stranded around an all-dielectric central member. Aramid yarn shall be used as a primary strength member, and a polyethylene outside jacket shall provide for overall protection. The cable shall be qualified as compliant with RUS Federal Rule 7CFR1755.900.

86-9.01B(2) Fiber Optic Cable

Each optical fiber shall be made glass and consists of a doped silica core surrounded by concentric silica cladding. All fibers in the buffer tube shall be usable fibers, and shall be sufficiently free of surface imperfections and inclusions to meet the optical, mechanical, and environmental requirements of these specifications. The required fiber grade shall reflect the maximum individual fiber attenuation, to guarantee the required performance of each and every fiber in the cable.

The coating shall be a dual layered, UV cured acrylate and shall be mechanically or chemically strippable without damaging the fiber.

The cable shall comply with the optical and mechanical requirements over an operating temperature range of -40° to +158°F. The cable shall be tested in accordance with EIA-455-3A (FOTP-3), "Procedure to Measure Temperature Cycling Effects on Optical Fiber, Optical Cable, and Other Passive Fiber Optic Components". The change in attenuation at extreme operational temperatures (-40° to +158°F) for single mode fiber shall not be greater than 0.20 dB/km, with 80 percent of the measured values no greater than 0.10 dB/km. The single mode fiber attenuation shall be measured at 1550 nm.
For all fibers, the attenuation specification shall be a maximum attenuation for each fiber over the entire operating temperature range of the cable.
Fibers within the finished cable shall meet the requirements in the following table:

FIBER OPTIC CABLE PROPERTIES

Parameters	Characteristic
Type	Step Index
Core diameter	8.3 µm (nominal)
Cladding diameter	125 µm ±1.0 µm
Core to Cladding Offset	≤1.0 µm

DocuSign Envelope ID: 894511EA-295B-49EB-A393-D26A6837FDD4

Parameters	Characteristic
Coating Diameter	250 µm ±15 µm
Cladding Non-circularity defined as: [1-(min. cladding diameter ÷max. cladding dia.)]x100	≤2.0%
Proof/Tensile Test	50 kpsi, min.
Attenuation: @1310 nm @1550 nm	 ≤0.4 dB/km ≤0.3 dB/km
Attenuation at the Water Peak	≤2.1 dB/km @
Bandwidth: @ 850 nm @1310 nm (SM)	 N/A N/A
Chromatic Dispersion: Zero Dispersion Wavelength Zero Dispersion Slope	 1301.5 to 1321.5 nm ≤0.092 ps/(nm2*km)
Maximum Dispersion:	≤3.3 ps/(nm*km) for 1285 - 1330 nm <18 ps/(nm*km) for 1550 nm
Cut-Off Wavelength	<1250 nm
Mode Field Diameter (Petermann II)	9.3 ±0.5 µm at 1300 nm 10.5 ±1.0 µm at 1550 nm

86-9.01B(2)(1) Fiber Color Coding

In buffer tubes containing multiple fibers, each fiber shall be distinguishable from others in the same tube by means of color coding according to the following:

FIBER OPTIC STRAND COLOR ASSIGNMENT

Fiber No.	Fiber Color
1	Blue (BL)
2	Orange (OR)
3	Green (GR)
4	Brown (BR)
5	Slate (SL)
6	White (WH)
7	Red (RD)
8	Black (BK)
9	Yellow (YL)
10	Violet (VL)
11	Rose (RS)
12	Aqua (AQ)

Buffer tubes containing fibers shall also be color coded with distinct and recognizable colors according to the same table listed above for fibers.
The colors shall be targeted in accordance with the Munsell color shades and shall meet EIA/TIA 598 "Color Coding of Fiber Optic Cables”.

DocuSign Envelope ID: 894511EA-295B-49EB-A393-D26A6837FDD4

The color formulation shall be compatible with the fiber coating and the buffer tube filling compound, and be heat stable. It shall not fade or smear or be susceptible to migration and it shall not affect the transmission characteristics of the optical fibers and shall not cause fibers to stick together.

86-9.01B(2)(2) Cable Construction

86-9.01B(2)(2)(1) General

Fiber optic cable samples, 12 feet in length, with part numbers, catalogue information, and documents from manufacturer shall be submitted to the Engineer.
The fiber optic cable shall consist of, but not be limited to, the following components:

1. Buffer tubes
2. Central member
3. Filler rods
4. Stranding
5. Core and cable flooding
6. Tensile strength member
7. Ripcord
8. Outer jacket

86-9.01B(2)(2)(2) Buffer Tubes

Clearance shall be provided in the loose buffer tubes between the fibers and the inside of the tube to allow for expansion without constraining the fiber. The fibers shall be loose or suspended within the tubes. The fibers shall not adhere to the inside of the buffer tube.
Each buffer tube shall contain one, six, or a maximum of 12 fibers.

The loose buffer tubes shall be extruded from a material having a coefficient of friction sufficiently low to allow free movement of the fibers. The material shall be tough and abrasion resistant to provide mechanical and environmental protection of the fibers, yet designed to permit safe intentional "scoring" and breakout, without damaging or degrading the internal fibers.

For water migration resistance, each loose buffer tube shall contain a water-swellable yarn or a homogeneous hydrocarbon-based gel with anti-oxidant additives. The filling compound shall be non-toxic and dermatologically safe to exposed skin. It shall be chemically and mechanically compatible with all cable components, non-nutritive to fungus, non-hygroscopic and electrically non-conductive. The filling compound shall be free from dirt and foreign matter and shall be readily removable with conventional nontoxic solvents.

Buffer tubes shall be stranded around a central member by a method that will prevent stress on the fibers when the cable jacket is placed under strain, such as the reverse oscillation stranding process.

Each buffer tube shall be distinguishable from other buffer tubes in the cable by means of the color coding as specified above for the fibers.

Central Member: The central member, which functions as an anti-buckling element, shall be a glass reinforced plastic rod with similar expansion and contraction characteristics as the optical fibers and buffer tubes. A linear overcoat of low density polyethylene shall be applied to the central member to achieve the optimum diameter to provide the proper spacing between buffer tubes during stranding.

DocuSign Envelope ID: 894511EA-295B-49EB-A393-D26A6837FDD4

Filler Rods: Filler rods may be included in the cable to maintain the symmetry of the cable cross-section. Filler rods shall be solid medium or high-density polyethylene. The diameter of filler rods shall be the same as the outer diameter of the buffer tubes.

Stranding: Completed buffer tubes shall be stranded around the overcoated central member using stranding methods, lay lengths and positioning such that the cable shall meet mechanical, environmental and performance specifications. A polyester binding shall be applied over the stranded buffer tubes to hold them in place. Binders shall be applied with sufficient tension to secure the buffer tubes to the central member without crushing the buffer tubes. The binders shall be non-hygroscopic, non-wicking (or rendered so by the flooding compound), and dielectric with low shrinkage.

Core and Cable Flooding: The cable core shall contain a water-blocking material or the cable core interstices shall be filled with a polyolefin based compound to prevent water ingress and migration. The water blocking material or the flooding compound shall be homogeneous, non-hygroscopic, electrically non-conductive, and non-nutritive to fungus. The core shall be free from dirt and foreign matter and shall be readily removable with conventional nontoxic solvents.
The compound shall also be nontoxic, dermatologically safe and compatible with all other cable components.

Tensile Strength Member: Tensile strength shall be provided by high tensile strength aramid yarns and fiberglass which shall be helically stranded evenly around the cable core and shall not adhere to other cable components.

Ripcord: The cable shall contain at least one ripcord under the jacket for easy sheath removal.
Outer Jacket: The jacket shall be free of holes, splits, and blisters and shall be medium or high density polyethylene (PE), or medium density cross-linked polyethylene with minimum nominal jacket thickness of 1000 µm ±76 µm. Jacketing material shall be applied directly over the tensile strength members and flooding compound and shall not adhere to the aramid strength material. The polyethylene shall contain carbon black to provide ultraviolet light protection and shall not promote the growth of fungus.

The jacket or sheath shall be marked with the manufacturer's name, the words "Optical Cable", the number of fibers, "SM," year of manufacture, and sequential measurement markings every meter. The actual length of the cable shall be within -0/+1 percent of the length marking.
The marking shall be in a contrasting color to the cable jacket. The height of the marking shall be approximately 0.1 inch.

Strand Steel Messenger: (for temporary aerial fiber optic cable): The messenger shall be covered by a rugged, durable, and easy strap polyethylene jacket. The jacket shall be free of holes, splits, and blisters.

The fiber optic cable samples (3 foot length) as well as its catalogue shall be submitted to the Engineer.

86-9.01B(2)(3) General Cable Performance Specifications

DocuSign Envelope ID: 894511EA-295B-49EB-A393-D26A6837FDD4

The F/O cable shall withstand water penetration when tested with a 3 feet static head or equivalent continuous pressure applied at one end of a 3 feet length of filled cable for one hour. No water shall leak through the open cable end. Testing shall be done in accordance with EIA-455-82 (FOTP-82), "Fluid Penetration Test for Fluid-Blocked Fiber Optic Cable."

A representative sample of cable shall be tested in accordance with EIA-455-81A, "Compound Flow (Drip) Test for Filled Fiber Optic Cable." The test sample shall be prepared in accordance with Method A. The cable shall exhibit no flow (drip or leak) at 80°C as defined in the test method.

Crush resistance of the finished F/O cables shall be 115 lbs/in applied uniformly over the length of the cable without showing evidence of cracking or splitting when tested in accordance with EIA-455-41 (FOTP-41) "Compressive Loading Resistance of Fiber Optic Cables". The average increase in attenuation for the fibers shall be ≤0.10 dB at 1550 nm for a cable subjected to this load. The cable shall not exhibit any measurable increase in attenuation after removal of load. Testing shall be in accordance with EIA-455-41 (FOTP-41), except that the load shall be applied at the rate of 0.12" to 0.74" per minute and maintained for 10 minutes.

The cable shall withstand 25 cycles of mechanical flexing at a rate of 30 ±1 cycles/minute. The average increase in attenuation for the fibers shall be ≤0.20 dB at 1550 nm at the completion of the test. Outer cable jacket cracking or splitting observed under 10x magnification shall constitute failure. The test shall be conducted in accordance with EIA-455-104 (FOTP-104), "Fiber Optic Cable Cyclic Flexing Test", with the sheave diameter a maximum of 20 times the outside diameter of the cable. The cable shall be tested in accordance with Test Conditions I and II of (FOTP-104).

Impact testing shall be conducted in accordance with EIA-455-25 (FOTP-25) "Impact Testing of Fiber Optic Cables and Cable Assemblies". The cable shall withstand 20 impact cycles. The average increase in attenuation for the fibers shall be ≤0.20 dB at 1550 nm. The cable jacket shall not exhibit evidence of cracking or splitting.

The finished cable shall withstand a tensile load of 600 lbfs without exhibiting an average increase in attenuation of greater than 0.20 dB. The test shall be conducted in accordance with EIA-455-33 (FOTP-33), "Fiber Optic Cable Tensile Loading and Bending Test". The load shall be applied for one-half hour in Test Condition II of the EIA-455-33 (FOTP-33) procedure.

86-9.01B(2)(4) Packaging And Shipping Requirements

Documentation of compliance to the required specifications shall be provided to the Engineer prior to ordering the material.
Attention is directed to "Fiber Optic Testing," elsewhere in these special provisions.
The completed cable shall be packaged for shipment on reels. The cable shall be wrapped in a weather and temperature resistant covering. Both ends of the cable shall be sealed to prevent the ingress of moisture.
Each end of the cable shall be securely fastened to the reel to prevent the cable from coming loose during transit. Two meters of cable length on each end of the cable shall be accessible for testing.
Each cable reel shall have a durable weatherproof label or tag showing the manufacturer's name, the cable type, the actual length of cable on the reel, the Contractor's name, the contract number, and the reel number. A shipping record shall be provided to the Engineer in a weatherproof envelope showing the above information and also include the date of manufacture, cable

DocuSign Envelope ID: 894511EA-295B-49EB-A393-D26A6837FDD4

characteristics (size, attenuation, bandwidth, etc.), factory test results, cable identification number and any other pertinent information
.
The minimum hub diameter of the reel shall be at least thirty times the diameter of the cable. The F/O cable shall be in one continuous length per reel with no factory splices in the fiber. Each reel shall be marked to indicate the direction the reel should be rolled to prevent loosening of the cable.

Installation procedures and technical support information shall be furnished at the time of delivery.

Installation procedures and technical support information shall be furnished at the time of delivery.

86-2.05B(2)(5) Fiber Optic Cable

Existing fiber-optic cable in occupied conduits shall not be removed during the installation of fiber-optic cable.

The Contractor shall furnish and install conduit dividers to allow the fiber-optic cable to be installed over the existing cables or conductors.

Conduit dividers shall have a minimum of two cells and be installed according to the manufacturer's recommendations.

The conduit divider shall be installed on top of existing cables or conductors, and the fiber-optic cable installed in one of the cells.

Conduit dividers shall be MaxCell by TVC Communications or approved equal. Rigid or semi-rigid innerduct is not allowed.

Conduit dividers are not required for empty conduits. Furnishing and installation of conduit dividers shall be considered incidental to the installation of fiber optic cable.

86-9.01B(3) Fiber Optic Splice Enclosure

86-9.01B(3)(1) General

The F/O field splices shall be enclosed in splice closures, which shall be complete with splice organizer trays, brackets, clips, cable ties, seals, and sealant, as needed. The splice closure shall be suitable for a direct burial or pull box application. Manufacturer's installation instructions shall be supplied to the Engineer prior to the installation of any splice closures. Location of the splice closures shall be where a splice is required as shown on the plans, designated by the
Engineer, or described in these special provisions.

The fiber optic splice closure shall consist of an outer closure, an inner closure and splice trays, and shall conform to the following special provisions.

The fiber optic splice closure shall be suitable for a temperature range of 32° to 122°F.

The size of the closure shall allow all the fibers of the largest fiber optic cable to be spliced to a second cable of the same size, plus 12 additional pigtails. The closure shall be not more than 34 inches in length and not more than eight inches in diameter. Two outer closures shall fit into the

DocuSign Envelope ID: 894511EA-295B-49EB-A393-D26A6837FDD4

fiber optic splice vault and shall leave sufficient space for routing of the fiber optic communication cables, without exceeding the minimum bending radius of any cable. The closures shall be designed for butt splicing.

The splice closure shall conform to the following specifications:
1. Non-filled thermoplastic case
2. Rodent proof, waterproof, re-enterable and moisture proof
3. Accommodate a minimum of two express (trunk) cables and two to six drop cables 4. Cable entry ports shall accommodate 0.38-inch to 0.98-inch diameter cables
5. Multiple grounding straps
6. Accommodate up to eight splice trays
7. Suitable for "butt" or "through" cable entry configurations
8. Place no stress on finished splices within the splice trays
9. Meet latest Telcordia GR-771 requirements for splice closures

All materials in the closures shall be nonreactive and shall not support galvanic cell action.
The outer closure shall be compatible with the other closure components, the inner closure, splice trays, and cables.
The end plate shall consist of two sections and shall have capacity for two fiber optic trunk communication cables and a minimum of two fiber optic drop communication cables.
The outer closure shall protect the splices from mechanical damage, shall provide strain relief for the cable, and shall be resistant to salt corrosion.
The outer closure shall be waterproof, re-enterable and shall be sealed with a gasket. The outer closure shall be flash-tested at 14.9 psi.
The inner closure shall be of metallic construction. The inner closure shall be compatible with the outer closure and the splice trays and shall allow access to and removal of individual splice trays.
The splice trays shall be compatible with the inner closure and shall be constructed of rigid plastic or metal.
Each splice shall be individually mounted and mechanically protected in the splice tray.
The Contractor shall install the fiber splice closure in the splice vaults where splicing is required.
The fiber optic splice closures shall be securely fastened to the splice vault using standard hardware found in communication manholes.
The Contractor shall provide all mounting hardware required to securely mount the closures to the splice vault.
The fiber splice closure shall be mounted horizontally in a manner that allows the cables to enter at the end of the closure. Not less than 50 feet of each cable shall be coiled in the vault to allow the fiber splice closure to be removed for future splicing.
The unprotected fibers exposed for splicing within the closure shall be protected from mechanical damage using the fiber support tube or tubes and shall be secured within the fiber splice closure.
Upon completion of the splices, the splice trays shall be secured to the inner closure.
The closure shall be sealed using a procedure recommended by the manufacturer that will provide a waterproof environment for the splices. Encapsulant shall be injected between the inner and outer closures.
Care shall be taken at the cable entry points to ensure a tight salt resistant and waterproof seal is made which will not leak upon aging. It is acceptable to have multiple pigtails enter the fiber splice closure through one hole as long as all spaces between the cables are adequately sealed.
The fiber optic splice closure model SCF canister type from Corning/Siecor, or model FibrDome from 3M are recommended.

DocuSign Envelope ID: 894511EA-295B-49EB-A393-D26A6837FDD4

86-9.01B(3)(2) Fiber Optic Splice Trays

Splice trays shall accommodate a minimum of 12 fusion splices and allow for a minimum bend radius of two inches. Individual fibers shall be looped one full turn within the splice tray to allow for future splicing. No stress shall be applied on the fiber when it is located in its final position. Buffer tubes shall be secured near the entrance of the splice tray to reduce the chance that an inadvertent tug on the pigtail will damage the fiber. The splice tray cover may be transparent.
Splice trays in the splice closure shall conform to the following:

1. Accommodate up to 24 fusion splices.
2. Place no stress on completed splices within the tray.
3. Stackable with a snap-on hinge cover.
4. Buffer tubes securable with channel straps.
5. Must be able to accommodate a fusion splice with the addition of an alternative splice holder.
6. Must be labeled after splicing is completed.

Only one single splice tray may be secured by a bolt through the center of the tray in the fiber termination unit. Multiple trays must be securely held in place as per the manufacturer's recommendation.

86-9.01B(4) Fiber Optic Cable Assemblies And Pigtails

Cable assemblies and pigtails shall be products of the same manufacturer. The cable used for cable assemblies and pigtails shall be made of fiber meeting the performance requirements of these special provisions for the F/O cable being connected. All components or assemblies shall be best quality, noncorroding, with a design life of at least 20 years.
The cable assemblies and components manufacturer shall be ISO 9001 registered.

86-9.01B(4)(1) Fiber Optic Connectors

FDP connectors shall be SC type, Ultra Physical Contact (UPC), unless otherwise directed.
Connectors for media converter equipment (i.e., GBICs) can be SC or LC type. Jumper cables shall be provided that match the connectors at each end of the cable. Two duplex connectors shall be provided on patch cords. Optical parameters of the connectors shall meet the standards of Telcordia GR-326 and GR-3120 generic requirements for single mode optical connectors and jumper assemblies.

86-9.01B(4)(2) Fiber Optic Patch Cords

Patch cords shall utilize a duplex zip-cord type jacketed cable, in lengths required to meet minimum bend radius while connected and routed through cable management hardware but no less than 1 meter in length. The patch cord shall be terminated with SC and/or LC compatible Ultro Physical Contact (UPC) single mode connectors at both ends. The fiber strands shall meet the specifications as those of the fiber cable and the connectors shall meet the specifications as specified elsewhere in these special provisions. All patch cords shall be at least three feet in length, for outdoor cabinets or six feet in length for data center cabinets with cable management to avoid stress and provide orderly routing.
The outer jacket of duplex patch cords shall be colored yellow. The two individual fibers of the patch cord shall have color coded strain-relief boots to provide easy visual identification for polarity.

DocuSign Envelope ID: 894511EA-295B-49EB-A393-D26A6837FDD4

86-9.01B(4)(3) Pigtail Assemblies

The cable construction shall allow a small bend radius for installation in space-constrained areas. The cable shall contain a dielectric strengthening fibers and a protective outer jacket.
The patch cord shall comply with all TIA/EIA requirements.

Pigtails - Pigtails shall be of simplex (one fiber) construction, in 900 µm tight buffer form, surrounded by aramid for strength, with a PVC jacket with manufacturer identification information and a normal outer jacket with diameter of 0.12 inch. Single mode cable jackets shall be yellow in color. All pigtails shall be factory terminated and tested and at least 3 feet in length.

86-9.01B(5) Fiber Optic Distribution Unit

Fiber distribution unit (FDU) shall be EIA-310 standard mount type as shown on the plans.
FDU shall consist of a connector module housing (CMH) and a splice module housing (SMH). The CMH shall have sufficient number of connection panels to handle the associated fiber terminations. The SMH shall have the capacity to secure and store the required splice trays and break out cables.

Connector module housing (CMH) shall have a Lexan front cover so as not expose fiber optic connections. Each connection panel shall have a minimum of six coupler capacity and all panel positions shall be filled with couplers. All spare couplers shall have dust covers on both sides. Each connection panel shall be secured to the CMH frame with two plastic push snap fastener on each side of the panel.

Splice module housing (SMH) shall have sufficient number of splice trays to handle the transition splices between the field cables and their respective breakouts. Cable accesses to the SMH shall have grommets. SMH shall have a rear metal cover of the same gauge and color as the remainder of the FDU rack

The front and back covers of the FDU shall be retractable or removable to facilitate internal installation.

86-9.01C Construction

86-9.01C(1) General

There shall be no re-use fiber optic cable for the installation.
Installation procedures shall be in conformance with the procedures specified by the cable manufacturer for the specific cable being installed. The Contractor shall submit the manufacturer's recommended procedures for pulling fiber optic cable at least 20 working days prior to installing cable. Mechanical aids may be used if a tension-measuring device and a breakaway swivel are placed in tension to the end of the cable. The tension shall applied not exceed 500 lbf or the manufacturer's recommended pulling tension, whichever is less.
During cable installation, the bend radius shall be maintained at a minimum of 20 times the outside diameter. The cable grips for installing the fiber optic cable shall have a ball bearing swivel to prevent the cable from twisting during installation.

The F/O cable shall be installed using a cable pulling lubricant recommended by the F/O cable and/or the innerduct manufacturer, and a pull tape conforming to the provisions described under "Conduit" elsewhere in these special provisions. Contractor's personnel shall be stationed at each

DocuSign Envelope ID: 894511EA-295B-49EB-A393-D26A6837FDD4

splice vault and pull box through which the cable is to be pulled to lubricate and prevent kinking or other damage.

The cost of any damaged or broken fiber cable shall be borne by the Contractor. F/O cable shall be installed without splices except where specifically allowed on the plans. If splice locations are not shown on the plans, splicing shall be limited to one cable splice every 20,000 feet. Any midspan access splice or FDU termination shall involve only those fibers being spliced as shown on the plans. Cable splices shall be located in splice closures, installed in splice vaults shown on the plans. A minimum of 60 feet of slack shall be provided for each F/O cable at each splice vault. Slack shall be divided equally on each side of the F/O splice closure.

Unless shown or provided otherwise, only F/O cable shall be installed in each innerduct. Pulling a separate F/O cable into a spare duct to replace damaged fiber will not be allowed.

At the Contractor's option, the fiber may be installed using the air blown method as approved by the Engineer. If integral innerduct is used, the duct splice points or any temporary splices of innerduct used for installation shall withstand a static air pressure of 110 psi.

The fiber installation equipment shall incorporate a mechanical drive unit or pusher, which feeds cable into the pressurized innerduct to provide a sufficient push force on the cable, which is coupled with the drag force created by the high-speed airflow. The unit shall be equipped with controls to regulate the flow rate of compressed air entering the duct and any hydraulic or pneumatic pressure applied to the cable. It shall accommodate longitudinally ribbed, or smooth wall ducts from nominal 0.625-inch to two-inch inner diameter. Mid assist or cascading of equipment shall be for the installation of long cable runs. The equipment shall incorporate safety shutoff valves to disable the system in the event of sudden changes in pneumatic or hydraulic pressure.

The equipment shall not require the use of a piston or any other air capturing device to impose a pulling force at the front end of the cable, which also significantly restricts the free flow of air through the inner duct. It shall incorporate the use of a counting device to determine the speed of the cable during installation and the length of the cable installed.

86-9.01C(2) Fiber Optic Cable Terminations

The jacketed cable shall be lashed with tie wraps to the rack prior to entering the FDU. The cable shall also be tie-wrapped to the inside of the FDU near the point of entry. The glass fibers shall not be damaged during cutting and removal of the buffer tubes.
The jacketed area and bare fibers shall be cleaned to remove the moisture blocking gel. The transition from the buffer tube to the bundle of jacketed fibers shall be treated by an accepted procedure for sleeve tubing, shrink tubing and silicone blocking of the transition to prevent future gel leak. A subsequent transition shall be made, with flexible tubing, to isolate the fiber bundles of each buffer tube to serve as a transition from the bundle to the separation point and to protect the individual coated fibers. The last transition point (bundle to single fiber) shall consist of inserting the individual fibers into No. 26 AWG clear teflon tubing, to protect the fiber as it is routed toward the splice tray and to allow clear color identification of fibers for proper distribution. The final transition from bundle to individual fiber tube shall be secured with an adhesive heat shrink sleeve. The individual fibers shall then be stripped and prepared for splicing.

DocuSign Envelope ID: 894511EA-295B-49EB-A393-D26A6837FDD4

All fibers inside a fiber optic cable entering a FDU shall be properly terminated, whether they are lit or dark.

86-9.01C(3) Distribution Interconnect Package

Distribution involves connecting the fibers to the active electronic components. The distribution equipment consists of FDUs with connector panels, couplers, splice trays, fiber optic pigtails and cable assemblies with connectors. The distribution interconnect package shall be assembled and tested by a company who is regularly engaged in the assembly of these packages. Attention is directed to "Fiber Optic Testing" elsewhere in these special provisions. All distribution components shall be products of the same manufacturers, who are regularly engaged in the production of these components, and the respective manufacturers shall have quality assurance programs.

86-9.01C(4) Fiber Optic Cable Splicing

Field splices shall be done either in splice vaults or cabinets as shown on the plans. All splices in splice vaults shall be done in splice trays, housed in splice closures. All splices in cabinets shall be done in splice trays housed in FDU's.

Unless otherwise specified, fiber splices shall be the fusion type. The mean splice loss shall not exceed 0.1 dB per splice. The mean splice loss shall be obtained by measuring the loss through the splice in both directions and then averaging the resultant values.

The mid-span access method shall be used to access the individual fibers in a cable for splicing to another cable as shown on the plans. Cable manufacturers recommended procedures and approved tools shall be used when performing a mid-span access. Only the fibers to be spliced may be cut. All measures shall be taken to avoid damaging buffer tubes and individual fibers not being including those not used in the mid-span access.

The individual fibers shall be looped one full turn within the splice tray to avoid micro bending. A two-inch minimum bend radius shall be maintained during installation and after final assembly in the optical fiber splice tray. Each bare fiber shall be individually restrained in a splice tray. The optical fibers in buffer tubes and the placement of the bare optical fibers in the splice tray shall be such that there is no discernable tensile force on the optical fiber.

All splices shall be protected with a metal reinforced thermal shrink sleeve.

The Contractor will be allowed to splice a total of two fibers to repair any damage done during mid-span access splicing without penalty. The Contractor will be assessed a fine of $300.00 for each additional and unplanned splice. Any single fiber may not have more than three unplanned splices. If any fiber requires more than three unplanned splices, the entire length of F/O cable shall be replaced at the Contractor's expense.

86-9.01C(5) Fiber Optic Cable Labeling

86-9.01C(5)(1) General

The Contractor shall label all fiber optic cabling in a permanent consistent manner. All tags shall be of a material designed for long term permanent labeling of fiber optic cables and shall be marked with permanent ink on non-metal types, or embossed lettering on metal tags. Metal tags shall be constructed of stainless steel. Non-metal label materials shall be approved by the Engineer. Labels shall be affixed to the cable per the manufacturer's recommendations and shall not be affixed in a manner which will cause damage to the fiber. Handwritten labels will not be allowed.

DocuSign Envelope ID: 894511EA-295B-49EB-A393-D26A6837FDD4

86-9.01C(5)(2) Label Identification

Labeling of Cables.--Labeling of the backbone, distribution, and drop fiber optic cables shall conform to the following unique identification code elements:

86-9.01C(5)(3) Labeling Schemes

UNIQUE IDENTIFICATION CODE ELEMENTS FOR BACKBONE, DISTRIBUTION OR DROP CABLES

No.	Description	Code	Number Of Characters
1	Cable Type	Fiber: S: Single mode	1
2	Fiber Count	Number of fibers or conductor pairs (example: 72 fibers)	3
3	Begin Function	T: TMC; H: Hub; V: Video Node; D: Data Node; C: Cable Node; TV: CCTV Camera; CM: CMS; E: Traffic Signal; RM: Ramp Meter; TM: Traffic Monitoring/Count Station/Vehicle Count Station (VDS, TMS); SV: Splice Vault SC: Splice	1 or 2
4	County	County Number; Example: 033 (for Alameda)	3
5	Route Number	Hwy, Rte (example: 005)	3
6	Post Mile	Example: xxxxx	4
7	End Function	T: TMC; H: Hub; V: Video Node; D: Data Node; C: Cable Node; TV: CCTV Camera; CM: CMS; E: Traffic Signal; RM: Ramp Meter; TM: Traffic Monitoring/Count Station/Vehicle Count Station (VDS, TMS); SV: Splice Vault SC: Splice	1 or 2
8	County	County Number; Example: 033 (for Alameda)	3
9	Route Number	Hwy, Rte (example: 005)	3
10	Post Mile	Example: xxxxx	5
11	Unique ID	Identifies when two or more fiber cables are involved (example: xx)	2

Caltrans District 4 county system numbers are as following:

COUNTY NUMBERS

County	County System Number
Alameda	33
Contra Costa	28
Marin	27

DocuSign Envelope ID: 894511EA-295B-49EB-A393-D26A6837FDD4

County	County System Number
Napa	21
San Francisco	34
San Mateo	35
Santa Clara	37
Santa Cruz	36
Sonoma	20
Solano	23

Example: S 048 SV 033 080 00569 SV 033 080 00610 03.

The label in the example can be translated as a single mode (S) 48 strand cable (048) that starts from a splice vault (SV) in Alameda County (033) on I-80 (080) post mile 5.69 (00569) ends at another splice vault (SV) in Alameda County (033) on I-80 (080) at postmile 6.10 (00610). This fiber optic cable is uniquely identified as 03. This means the cable is the 3rd of the fiber optic cables in the pull box or the vault.

Each cable shall display a unique identification, regardless of where the cable is viewed. The begin function and end function correspond to the end points of each cable. The order of the begin and end function follow a hierarchy as listed below, where the lowest number corresponding to the begin/end function is listed first.

FUNCTION CODING

No.	Function
1	TMC
2	HUB
3	Video Node (VN)
4	Data Node (DN)
5	Cable Node
6	CCTV Camera
7	CMS
8	Traffic Signal
9	Ramp Meter
10	Traffic Monitoring Count Station
11	HAR
12	EMS
13	Weather Station
14	Weigh in Motion
15	Splice Vault or Cabinet

This scheme will work as follows:
A cable between the TMC and a HUB will always have the TMC listed as the start function and the HUB as the end function. Between a CMS and a Splice Vault, the start function will always be listed as the CMS, and so on. If a cable is connected between HUBs, for example HUB-01 and

DocuSign Envelope ID: 894511EA-295B-49EB-A393-D26A6837FDD4

HUB-03, the lowest number, in this case HUB-01, will be listed as the start function and HUB-03 as the end function.
At each FDU or ITU the Contractor shall provide a listing of the cable or cables terminated and where each fiber appears on the connector panel, a list of all jumpers and the equipment that they are connected to, and a geographical layout of all the equipment installed by the Contractor. In field cabinets, these shall be placed in a waterproof pouch mounted on the cabinet door.

86-9.01C(5)(4) Label Placement

LABEL ABBREVIATIONS

Purpose	Abbreviation
TMC	TXXX.XX
HUB	HXXX.XX
Vault	SVXXX.XX
Pullbox	PBXXX.XX
Camera	TVXXX.XX
CMS	CMXXX.XX
TMS	TMXXX.XX
Ramp Meter	RMXXX.XX
Traffic Signal	EXXX.XX
HAR	HRXXX.XX
EMS	FMXXX.XX
Weather Station	WSXXX.XX
Weigh in Motion	WTXXX.XX

The X's denote the post mile of the above elements.

Cables - All cables shall be clearly labeled with the unique identification code element method described elsewhere in these special provisions, at all terminations, even if no connections or splices are made, and at all splice vault entrance and exit points.

Cable to Cable Splices - All cable jackets entering the splice enclosure shall be labeled in accordance with the identification method described elsewhere in these special provisions.

Cable to Fiber Distribution Units - The cable jackets shall be clearly labeled at entry to the FDU in accordance with the unique identification code element method described elsewhere in these special provisions. In addition, each fiber and pigtail shall be labeled at the connector with the Fiber ID. The FDU shall be clearly labeled with the Cable ID on the face of the FDU. If multiple cables are connected to the FDU, each block of connectors relating to each individual cable shall be clearly identified by a single label with the Cable ID. Individual connections shall be clearly marked on the face of the FDU in the designated area with the Fiber ID.

Fiber - Fibers labels shall be placed next to the connectors of the individual fibers.

Patch Panels - The cable jackets shall be clearly labeled at entry to the Patch Panel in accordance with the unique identification code element method described elsewhere in these special provisions. In addition, each fiber and pigtail shall be labeled at the connector with the Fiber ID.

DocuSign Envelope ID: 894511EA-295B-49EB-A393-D26A6837FDD4

The patch panel shall be clearly labeled with the Cable ID on the face of the Panel. If multiple cables are connected to the Patch Panel, each block of connectors relating to each individual cable shall be clearly identified by a single label with the Cable ID. Individual connections shall be clearly marked on the face of the Panel in the designated area with the Fiber ID.

Splice Trays - A label shall be placed on each splice tray explaining the splices in each tray.

Add Sub-section 86-10:

86-10.01 Communications Hub Equipment

Furnish and install air-conditioned cabinets to house Ethernet core or distribution switches. Size the cabinet appropriately to fit all the equipment installed within the cabinet at the particular location. Size the cabinet to ensure ease of access to equipment and provide proper ventilation in order to maintain an internal operating environment that does not exceed the environmental operating ranges for devices placed within the cabinet. Furnish and install cabinet base extenders with all necessary hardware for the cabinets.

Prototype equipment is not acceptable. All equipment shall be current standard production units and shall have been in use for a minimum of six months. Rebuilt or reconditioned equipment will not be allowed.

86-10.01A(1) Standards

Ensure that the hub cabinets comply with the following standards:

1. ANSI
2. ASTM
3. IMSA
4. ISO 9001
5. NEC
6. NEMA TS-2
7. UL listed

86-10.01A(2) Environmental Requirements

Ensure the cabinet assembly can maintain the temperature and humidity within the environmental requirements of the hub switches.

86-10.01A(3) Submittals

Not used.

86-10.01A(4) Quality Control and Assurance

86-10.01A(4)(1) General

Documentation of all test results shall be provided to the Engineer within 2 working days after the test involved.

86-10.01A(4)(2) Factory Testing

Contractor to the Engineer.

86-10.01A(4)(3) Arrival On Site

Copies of the test results shall be submitted to the Engineer.

86-10.01B Materials

86-10.01B(1) General

Not Used

DocuSign Envelope ID: 894511EA-295B-49EB-A393-D26A6837FDD4

86-10.01B(2) Functional

Furnish Type 333 base-mounted hub cabinets meeting the following minimum requirements:

1. Side-by-side, double doors on both front and rear of cabinet
2. Fiber-optic distribution centers (paid separately)
3. Grounding bus bar
4. 19-inch rack system for mounting of all devices in the cabinet
5. Pull-out shelf for laptop and maintenance use
6. Maintenance access connections
7. Fluorescent lighting
8. Ventilation fans
9. 120VAC power supply
10. 120VAC ground fault circuit interrupter (GFCI)-protected duplex outlets for tools
11. 120VAC surge-protected duplex outlets for equipment
12. Sunshields
13. Lightning and surge protection on incoming and outgoing electrical lines (power and data)
14. Power strip along vertical rail
15. Air conditioner for cooling of the Ethernet switch

86-10.01B(3) Physical Features

Provide cabinets that are completely weatherproof to prevent the entry of water. Provide cabinet and door exterior seams that are continuously welded and all exterior welds are smooth. Provide cabinets with two full-size doors with three hinges, or a full-length stainless steel piano hinge, with stainless steel pins spot-welded at the top. Provide hinges that utilize stainless steel hinge pins. Provide hinges that are mounted so that they cannot be removed from the door or cabinet without first opening the door. Provide door and hinges braced to withstand a 100-pound per vertical foot of door height load applied vertically to the outer edge of the door when standing open. Ensure that there is no permanent deformation or impairment of any part of the door or cabinet body when the load is removed. Provide cabinet door fitted with a #2 Corbin lock. Provide two keys for each cabinet. Provide cabinet doors that are also pad lockable. Provide door openings that are double flanged on all four sides.

Provide cabinets constructed of unpainted sheet aluminum alloy H5052-H32 with a minimum thickness of 0.125 inch.

Provide the communications hub cabinet with sunshields outside to deflect solar heat away from the cabinet. The sunshields must be offset a minimum of one inch from the exterior cabinet walls. Ensure that the sunshields are fabricated from 5052-H32 aluminum sheet that is 0.125 inch thick, and that sunshield corners are rounded and smoothed for safety. Mount the sunshields on standoffs at the top and each side of the cabinet.

Provide doorstops at 90 and 180-degree positions. Ensure that both the door and the doorstop mechanism are of sufficient strength to withstand a simulated wind load of five pounds per square foot of door area applied to the both inside and outside surfaces without failure, permanent deformation, or compromising of door position and normal operation. Do not provide auxiliary police doors.

DocuSign Envelope ID: 894511EA-295B-49EB-A393-D26A6837FDD4

Ensure that cabinet doors include a gasket to provide a dust and weather-resistant seal when closed. Ensure that the gasket material is closed-cell neoprene and maintains its resiliency after exposure to the outdoor environment. Ensure that the gasket shows no sign of rolling or sagging, and provide a uniform dust and weather-resistant seal around the entire door facing.

Provide cabinets that include predrilled holes of standard diameter and bolt pattern with four (4) anchor bolts with each cabinet unit as part of the unit price bid. Provide a panel with each cabinet that matches the rest of the cabinet; and is held in place by four bolts provided with the panel. Drill or punch the panel to accommodate the bolts; the drill holes shall match the bolt pattern of the base cabinet of the cabinet. Provide a panel designed to be fitted in the interior of the cabinet and fabricated of the same material and thickness as the cabinet bottom.

Provide rails to create a cage to mount hardware, wiring panels and miscellaneous mounting brackets. Provide rails constructed of .1345-inch steel or .105-inch stainless steel. Provide rails with a keyhole design with slots 2 inches on center with a top opening of 5/8 inch in diameter to allow the insertion of a .625-inch by 1-inch carriage bolt. Ensure that the rails are 1.5 to 2 inches wide by .5 inches deep. Drill and tap the rails for 10-32 screws or rack screws with EIA universal spacing.

Provide rack assemblies that have a removable, standard 19-inch EIA compliant rack. The rack shall have a clearance between the rails of 17.5 inches.
Equip each cabinet with an aluminum storage compartment mounted in the rack assembly with the following dimensions (±0.5 inch): 16 inches wide, 14 inches long, and 1.75 inches deep. Provide compartment with ball-bearing telescoping drawer guides to allow full extension from the rack assembly. Ensure that when extended, the storage compartment opens to provide storage space for cabinet documentation and other miscellaneous items. Ensure that the storage compartment is of adequate construction to support a weight of 20 pounds when extended without sagging. Provide a top to the storage compartment that is hinged aluminum. Provide two (2) removable metal shelves with each cabinet.
Furnish a cabinet base extender with each hub cabinet that complies with these Project Special Provisions.

86-10.01B(3)(1) Lighting

Provide the field cabinet with two 20-watt fluorescent lamps and clear shatterproof shield assemblies which are mounted on the inside front and rear top of the cabinet. Ensure that these lamps are unobstructed and able to cast light on the equipment. Equip the field cabinet with door-actuated switches so that the lamps automatically turn on when either cabinet door is opened and go off when the doors are closed.

86-10.01B(3)(2) Electrical

Provide a service panel assembly to function as the entry point for AC power to the cabinet and the location for power filtering, transient suppression, and equipment grounding. Provide AC isolation within the cabinet. Configure cabinet to accept 120 VAC from the utility company.
Provide circuit breakers that are UL listed and have an interrupt capacity of 5,000 amperes and insulation resistance of 100 MΩ at 500 VDC. Provide power distribution blocks that are suitable for use as power feed and as junction points for two and three wire circuits. Ensure that the line side of each block is capable of handling up to 2/0 AWG conductors. Ensure that the AC neutral and equipment ground wiring and terminal blocks are isolated from the line wiring by an insulation resistance of at least 10 MΩ when measured at the AC neutral.

DocuSign Envelope ID: 894511EA-295B-49EB-A393-D26A6837FDD4

Provide UL listed surge protection devices according to the UL 1449, 2nd edition standard that comply with the NEMA requirements as detailed in the NEMA LS 1 (1992) standard.
Provide branch circuits, surge protection devices, and grounding for the ITS device-connected load served by the cabinet, including ventilation fans, internal lights, electrical receptacles, etc., as shown on the Plans. Terminate field wiring on terminal blocks with the voltage and current rating of the terminal block is greater than the voltage and current rating of the wire fastened to it.
Furnish a power distribution assembly that fits in the EIA 19-inch rack and provides for protection and distribution of 120VAC power.
Ensure that ground bus bars are fabricated from a copper alloy material compatible with copper wire. Use ground bus bars that have at least two positions where a #6 AWG stranded copper wire can be attached.
Mount the ground bus bar on the side of the cabinet wall adjacent to the service panel assembly for the connection of AC neutral wires and chassis ground wires. If more than one ground bus bar is used in a cabinet, use a minimum of a #10 AWG copper wire to interconnect them.
Wire into the cabinet's circuitry the connector harnesses for the ITS devices and other accessory equipment to be housed therein.

Terminate conductors on terminal blocks using insulated terminal lugs large enough to accommodate the conductor to be terminated. When two or more conductors are terminated on field wiring terminal block screws, use a terminal ring lug for termination of those conductors. Number all terminal block circuits and cover the blocks with a clear insulating material to prevent inadvertent contact.

86-10.01B(3)(3) Ventilation

Ensure the cabinet assembly can maintain the temperature and humidity within the environmental requirements of the hub switches.

Include two cooling fans with 100 CFM, minimum capacity. Provide thermostats to be incorporated into the ventilation system. Mount fans in the top of the cabinet.

Provide the cabinets with vent openings in the lower portion of the door to allow convection cooling of electronic components. Cover them fully on the inside with a commercially available disposable three layer graded type filter. All air entering the cabinet must pass through the air filter.

86-10.01B(3)(4) Air Conditioner

Furnish each hub cabinet with a rack mounted air-cooled air conditioner that operates on 120VAC. The air conditioner shall be fit within a 19-inch EIA communications rack and shall not be external mounted on the cabinet. The air conditioner shall be mounted in the bottom of the cabinet to avoid damage to any communications equipment.

The air conditioners shall have a built-in condensate evaporator and condensate drain fitting and hose to the outside of the cabinet. The air conditioner shall be rated for a minimum of 3500 BTU. There shall be low temperature control to prevent overcooling.

Provide EMI/RFI transient spike protection. Equip the cabinet and air conditioner with remote monitoring of high temperature and low airflow conditions. Intake air shall enter through cabinet door vent and be exhausted through top cabinet vents. Air conditioners shall be CFC free or low

DocuSign Envelope ID: 894511EA-295B-49EB-A393-D26A6837FDD4

ODP (R-22) refrigerant and shall use closed loop cooling. Insulate all cold components (coolant lines, compressor, evaporator, etc.) with high-performance insulation.

Blower motors shall be UL listed. Ensure the blower motors are equipped with automatic reset thermal overload protection. Provide double sealed and double shielded ball bearings.

The air conditioners shall have permanent corrugated aluminum or stainless steel air filters. The filters shall be removable and washable.

All grilles shall be stainless steel.

86-10.01B(5) Base Extenders

Fabricate extenders from the same materials and with the same finish as cabinet housing. Fabricate base extender in the same manner as controller cabinets. Provide base extenders that have a minimum height of 12".

86-10.01C Construction

Ensure all cabinet wiring is tagged and identified by the use of insulated pre-printed sleeves and follows the project's cable identification scheme. Ensure that the wire markers identify usage in plain words with sufficient details without abbreviations or codes.

Use stranded copper for all conductors, including those in jacketed cables. Neatly arrange all wiring, firmly lace or bundle it, and mechanically secure the wiring without the use of adhesive fasteners. Route and secure all wiring and cabling to avoid sharp edges and to avoid conflicts with other equipment or cabling. Terminate all wiring on a terminal block, strip, bus bar, device clamp, lug, or connector. Do not splice any wiring. Label all wiring, cables, terminal strips, and distribution blocks with permanent and waterproof tags. Provide strain relief for all cabling with connectors, all cabling entering knockouts or ports at the equipment, and where appropriate.
Fasten all components of the cabinet assembly to be mounted on cabinet side panels with hex-head or Phillips-head machine screws. Install the screws into tapped and threaded holes in the panels. The components include, but are not limited to, terminal blocks; bus bars, panel and socket mounted TVSS, circuit breakers, accessory and equipment outlets, and DC power supply chassis.

Fasten all other cabinet components with hex-head or Phillips-head machine screws installed with nuts (with locking washer or insert) or into tapped and threaded holes. Fasten stud-mounted components to a mounting bracket providing complete access to the studs and mounting nuts. Ensure that all fastener heads and nuts (when used) are fully accessible within a complete cabinet assembly, and any component is removable without requiring removal of other components, panels or mounting rails. Do not use self-tapping or self-threading fasteners.

Mount the air conditioner in the bottom of the cabinet and but do not obstruct any cable entry into the cabinet. Install condensate drains to drain condensation water out of the cabinet. Ensure the cabinet has provisions to route conduit to the existing cabinet as shown in the drawings.

Provide a cabinet that is ISO 9001 certified at the time of bid letting.
Equip cabinets with lightning and surge protection described separately in these Project Special Provisions.

DocuSign Envelope ID: 894511EA-295B-49EB-A393-D26A6837FDD4

Locate cabinets so as not to obstruct sight distance of vehicles turning on red.
Install base mounted cabinets as shown on the Plans and as approved by the Engineer. Install only the required number of conduits as shown on the Plans plus one additional spare stub out conduit. Position the ends of conduits approximately 2 inches above the finished surface of the concrete base. Mount the hub cabinets on cabinet base extenders.
Mount surge protection devices in the cabinet for the particular field devices that will be connected to that cabinet.
Terminate power service wire, video, and data cabling on the appropriate terminal strips, surge protection devices or jacks in the cabinet with insulated terminal lugs or connectors. Use a calibrated ratchet-type crimping tool to install the insulated terminal lugs onto the field wires.
Label spare circuits of the data cables and connect them to the cabinet ground bus bar.
Neatly bundle and identify all field wiring cables in the cabinet with permanent waterproof tags.
Ground all hub cabinets in accordance with the requirements of these Project Special Provisions.
Keep the ground wire from the cabinet ground bus bar to the ground rod assembly or array as short as possible. Ensure the ground wire is not in contact with any other part of the cabinet.

Add Sub-section 86-11:

86-11.01 Battery Backup Power System

Furnish and install an online UPS power system, and battery backup power supply as described below.

86-11.01A(1) Submittals

You must submit complete product data including description and model number, shop drawings, catalog cuts, software and technical literature for all fiber optic cable and equipment provided under this contract as part of your bid response package. Any manufacturer equipment specification which does not meet the performance requirements specified herein will require Owner prequalification and approval.

Acceptability of the manufacturer will be based on the manufacturer's experience, qualifications, certifications (i.e. ISO-9001), equipment reliability, and compliance with standards specified herein and full compatibility with the existing system.

86-11.01A(2) Quality Control and Assurance

86-11.01A(2)(1) General

Documentation of all UPS test results shall be provided to the Engineer within 2 working days after the test involved.

86-11.01A(2)(2) Factory Testing

Contractor to the Engineer.

86-11.01A(2)(3) Arrival On Site

Copies of the test results shall be submitted to the Engineer.

86-11.01B Materials

86-11.01B(1) General

Furnish and install a backup power system for communications hub cabinets, data centers and TMC facilities.

86-11.01B(2) Battery Backup UPS System

Furnish and install battery backup uninterruptible power supplies (UPS's), redundant switched Power Distribution Units (PDU's) and batteries at all Backhaul hub sites where AC power is utilized as described below.

DocuSign Envelope ID: 894511EA-295B-49EB-A393-D26A6837FDD4

86-11.01B(3) UPS, PDU and Battery

All UPSes shall be from the same manufacturer. You shall standardize on a single manufacturer for all UPSes.

All PDUs shall be from the same manufacturer. You shall standardize on a single manufacturer for all PDUs.

Each UPS and PDU shall also include any ancillary equipment or incidental items, such as required mounting hardware and cabling.

86-11.01B(3)(1) Functional

Provide online UPS units that produce uninterruptible power and power conditioning for the equipment in the communications hub cabinets. Size each UPS to provide adequate capacity to run its respective load without commercial power for one (1) hour. Provide load calculations for each configuration of equipment connecting to a UPS. You shall size the UPS and PDU based on the load of the final equipment configuration. Additionally, the UPS shall have the following basic characteristics:

- Backup power protection and line power conditioning to protect electronic hardware from power events, such as blackouts, sags, spikes, brown outs and surges.
- Provide automatic transfer switching for continuous operation of connected loads either with conditioned line power, battery backup power or power direct from the line should the UPS require maintenance.
- Provide a minimum automatic transfer time of less than 5ms
- UPS batteries shall be sealed, field replaceable and maintainable by BATA staff.
- Provide a 5 year warranty for UPS
- Provide a 2 year warranty for Batteries
- Provide access control security for operation and maintenance
- Provide diagnostic full system self-test on power up

The UPS and PDU shall:

- Be rack mountable and sized to fit within the NEMA enclosure and/or network equipment rack for the Backhaul hub site.
- Have a minimum of one (1) auto-sensing 10/100Base-Tx or faster IP addressable local Ethernet management port
- Have a minimum of one (1) RS232 or USB local communications port with communications cable provided.
- Provide device management via HTTPS, SNMPv2 or SNMPv3, and optionally SSH
- Provide integrated backlit LCD graphical display panel for monitoring, maintenance and control
- Provide automatic monitoring of internal state and external environment, such as power input status, load, runtime, UPS battery life, UPS and Battery temperature and environmental conditions such as temperature and humidity.

DocuSign Envelope ID: 894511EA-295B-49EB-A393-D26A6837FDD4

- Provide automatic SNMP TRAP and SMTP notification of power events such as loss of AC power, high temperature and overload
- Provide load monitoring and power control of individual outlets for power cycling, delayed power sequencing, and outlet use
- Provide user-configurable alarm thresholds
- Provide audible and visual alarms for the following:
    - Line Failure
    - Battery Low
    - Overload
    - System Fault conditions
- Provide over-the-network software upgrade

86-11.01B(3)(2) Performance

Provide UPS meeting the following performance requirements:
1. Output voltage distortion: less than 5 percent
2. Nominal input voltage: 120V
3. Nominal output voltage: 120V
4. Input frequency: 50/60 Hz ±3Hz, auto-sensing
5. Output frequency (sync to mains): 57-63 Hz for 60 Hz nominal frequency
6. Waveform type: Sine wave
7. Noise filtering: Full time multi-pole noise filtering shall meet 0.3% IEEE surge let-through; zero clamping response time shall meet UL 1449

Verify that the UPS meets all specifications and is capable of performing all of its functions during and after being subjected to:
1. Operating temperature: 0-104° F
2. Operating relative humidity: 95%
3. Storage temperature: 5-113° F
4. Storage relative humidity: 95%

86-11.01B(3)(3) Physical Features

Supply each UPS and PDU unit with twenty five (25) percent or four (4) spare outlets whichever is greater after all network electronics have been plugged into the UPS and PDU. Ensure that the UPS meets the following material requirements:
1. Rack mounted at all locations
2. Sealed AGM type, maintenance free batteries
3. USB or RS232 serial interface port
4. Status Lights: power on, power source and overload
5. Alarms: audible and remote notification
6. Manual power on/off switch

Supply each UPS unit with multi-pole noise filtering. Ensure that the UPS and PDU remote monitoring software performs the following functions:
1. Data logging
2. Event logging
3. Fault notification

DocuSign Envelope ID: 894511EA-295B-49EB-A393-D26A6837FDD4

4. Power event summary

Install UPS units in the communications hub cabinets, data centers and TMC facility as close as possible to their respective equipment. Connect the UPS unit to a power outlet. Connect the UPS or RS232 monitoring port to a compatible port on its respective out-of-band terminal server. Redundant Switched PDU's shall be plugged into each UPS. All Backhaul components requiring power to operate shall be plugged into a PDU and Backhaul components with redundant power supplies shall be plugged into different PDUs, such that the Hub site can maintain full operation for a minimum of one (1) hour after a loss of AC power. Configure each Hub site, TMC and Data Center site mounted UPS unit and PDU units for remote monitoring from the Network Management System (NMS). Install the UPS and PDU monitoring software on the Backhaul Network Management System for remote monitoring of each UPS and PDU unit. Configure the remote monitoring to send email alerts, syslog (if supported) events and SNMP traps. Configure access control security for each device. Run the UPS and PDU diagnostics.

Add Sub-section 86-13:

86-13.01 Communications Racks

Furnish and install freestanding enclosed communications racks in the communications hub buildings.

1. Provide enclosed communications racks meeting these minimum performance requirements:
2. All equipment shall comply with ANSI/EIA RS-310D,
3. Provide frame and external components with zinc coating per ASTM B633,
4. Paint interior and exterior components per RAL 7035, and
5. The thermostatically controlled fans shall provide up to 300 cubic feet per minute (cfm) of exhaust. Thermostats shall monitor both humidity and temperature.

86-13.01A Materials

86-13.01A(1) Standards

Ensure that the communications hub building comply with the following standards:

1. ANSI
2. ASTM
3. IMSA
4. ISO 9001
5. NEC
6. NEMA TS-2
7. UL listed

86-13.01A(2) Environmental Requirements

Not Used

86-13.01A(3) Submittals

Prior to beginning work, deliver manufacturer’s warranties and guarantees for materials and instruction sheets and parts lists supplied with materials for approval.

86-13.01A(4) Quality Control and Assurance

86-13.01A(4)(1) General

Provide a three-year warranty.

DocuSign Envelope ID: 894511EA-295B-49EB-A393-D26A6837FDD4

86-13.01B Materials

Provide enclosed communications racks meeting the following minimum material requirements:

1. 19-inch EIA single-bay
2. Nominal height of less base and wheels, full size rack cabinet 42 rack units high (approx. 78 inches)
3. Nominal 4-inch-high ventilated base
4. Nominal depth: 30 inches
5. All-metal components
6. Full-height locking window door on the front
7. Urethane gaskets for window sealing
8. ¼-inch-thick Plexiglas® window panes
9. Solid metal removable side panels with bottom vents
10. Full-height solid metal door for the back of each cabinet
11. Vented top with three integral, thermostatically controlled, prewired fans
12. Set of four (4) heavy-duty, locking casters on base

86-13.01B(1) Mechanical

Construct all rack frames from 12-gauge, cold-formed steel. Construct all side panels and door panels of 14-gauge steel. Construct the vented base from 16-gauge steel. Construct the 19-inch electrical rack angles from 12-gauge steel.

86-13.01B(2) Doors

Equip all doors with grounding brackets and doorstop kits. Door hinges shall have a maximum opening range of 130-140 degrees. Hinge kits shall permit left or right side mounting. Furnish the racks with tamper-proof hinges and removable hinge pins.

Provide the rack with flush swing handles with tamper resistant locks on all doors. Key all locks to the same key with two sets of keys provided for each unit. Locks shall have a three-point latch mechanism.

86-13.01B(3) Wall Panels

Provide removable solid side panels with hanger tabs for easy alignment and assembly. Provide vents on front and rear panels, along with wire entry access plates with dust-tight seals.

86-13.01B(4) Finish

Furnish factory-applied paint or powder-coating that is black in color on the exterior and interior of all components.

Furnish and install one metal shelf kit per communications rack. Provide each shelf the full width and depth of the rack angles and attach directly to the rack angles. Furnish and install one metal keyboard slide out drawer per full-height communications rack.

86-13.01C Construction

Furnish and install an outlet strip and 10-foot power cord along one rear vertical rack frame. Furnish and install strips that use 120 VAC 60 Hz power and shall contain at least 10 outlets over the 70 inches for full size racks. Furnish and install grounding bus bar system to ground the rack-mounted electrical equipment. Equip door with grounding studs.

Furnish and install cable management hardware for attachment vertically along the rack frame and horizontally between 19-inch rack angles. Cable management hardware shall run vertically up one rear rack frame and shall include six horizontal runs per rack. Provide hardware including cable organizers and clamps to provide strain relief and cable mounting.

Install the full-height communications rack cabinets in the hub buildings as shown in the Plans.

DocuSign Envelope ID: 894511EA-295B-49EB-A393-D26A6837FDD4

Install a keyboard shelf at a height comfortable for operator use when sitting on a stool. Provide tamper-resistant but removable screws through hinges and exterior panels. Furnish any special tools required to remove tamper resistant screws.

Add Section 86-14:

86-14 LOGICAL NETWORK REQUIREMENTS

86-14.01 GENERAL

86-14.01A Summary

This section specifies the Work required for the design, manufacture, delivery and installation of equipment, and for the modification of existing equipment and facilities to provide a fully functional fiber optic-based network, as specified herein, in Section 86, Electrical Systems, of the Standard Specifications, and as shown on the Exhibits and Drawings.

Work to be performed under this Contract:

1. The construction component of this contract will provide a complete and functioning backhaul infrastructure for high speed optical Ethernet communications along the I-680, I-880, and I-80 Corridors. This project will also include the installation of pull boxes, fiber optic splice vaults and conduit for communications and electrical service, communications cabinets and cabinet racks, communications facilities and racks, termination of electrical service, and any ancillary equipment or materials for each Backhaul Hub location site.
2. You will furnish, install and test the fiber optic cable network and optical terminations in the participating facilities, made ready for the future connection of the network electronics. You will also provide all network electronics and software/firmware necessary to create the Backhaul network and integrate this communications system into existing networks, such as the ELN, BATAnet and External Communications Network (ECN) networks. You shall furnish, install, and test any ancillary equipment and/or materials required to complete the installation and make the networks ready for use by BAIFA. The only exceptions are items specified to be provided by BAIFA or others. You must provide all necessary equipment, material, and labor to provide and test the Backhaul network as specified herein. This includes furnishing all required network electronics, software, firmware, software licenses, cables, splicing, termination and all incidental components necessary for the new network. Items to be furnished include, but not limited to:
    - Core Ethernet switches – including Layer 3 and/or advance licenses for each
    - Distribution Ethernet switches – including Layer 3 and/or advance licenses for each
    - Access Ethernet switches
    - Network Firewalls – Including VPN and Intrusion Detection & Prevention System (IDPS) functionality with licenses for each
    - Remote Environmental Monitoring Appliances and Sensors
    - Uninterruptible Power Supplies and Battery Packs
    - IP Addressable Power Distribution Units
    - Power cables

DocuSign Envelope ID: 894511EA-295B-49EB-A393-D26A6837FDD4

- Single-mode and multimode small form factor pluggable (SFP), and copper Gigabit Interface Converters (GBICs)
- Single-mode fiber optic trunk and drop cable
- Fiber optic splice centers and interconnect centers
- Fiber optic cable
- Fiber optic patch cords
- Category 6 Ethernet patch cords
- Cable management as required
- Fiber optic cable splicing and termination
- Additional shelves for existing racks or cabinets as required
- Labeling devices including permanent cable tags for all cables
- Miscellaneous hardware or other parts required for a complete and functioning installation

3. Using existing network infrastructure, racks, facilities or cabinets, install all required network electronics, software, cables, and components necessary for the new network.
4. You shall coordinate with BAIFA, its partners and other contractors, including the toll system integrator (TSI) and civil contractor, communications solution providers and utility service providers to ensure sufficient fiber terminations, electrical power, outlets, and rack space are provided as part of this contract. Installation shall include but not be limited to:
    - Coordination with BAIFA and the utility service provider to ensure sufficient reliable (clean) power for all network electronics, with UPS power backup for Core, Distribution and Access switching platforms and network electronics
    - Install shelves and cable management as required
    - Install network electronics per manufactures specifications
    - Install Grounding of all Equipment and equipment Racks per National Electric Code (NEC)
    - Install fiber optic trunk and drop cables. All will be routed in a clean and neat manner
    - Install splice enclosures and splice interconnection centers
    - Install fiber optic patch cords from network electronics to the new and existing fiber optic patch panels
    - Install Category 6 Ethernet patch cords from network electronics to the patch panels using Velcro straps
    - Install power cables for all network electronics. These cables will be routed separately from all Ethernet cables
    - Install cable tags on all data cables. Include source and destination on all labels
    - Provide comprehensive documentation and instruction to BAIFA after performing the proper set up, use, security, troubleshooting and configuration of the network electronics and software, such as:
    - Narrative, flowcharts and screen captures for console and GUI-based administration

DocuSign Envelope ID: 894511EA-295B-49EB-A393-D26A6837FDD4

- Directions and detailed chassis diagrams/pictures for replacement, addition, and removal of network electronic components, field-replaceable or hot-swappable component parts and modules
- Identification, authentication and authorization information such as usernames; passwords; group memberships; roles, rights & permissions
- VPN and encryption information such as certificates, shared keys, policy configurations and end points
- Furnish test equipment and computers necessary to test the Backhaul
- Test all aspects of the Backhaul after installation as specified by BAIFA
- Provide follow-up and ongoing maintenance and support to the network
- Furnish documentation submittals as specified
- Furnish and install materials as required for restoration
- All Contractor-furnished materials must not be stored on the premises of BAIFA
- You are responsible for providing the material storage area with locking container such as semi-trailer or shipping container for Your use
- You are responsible for providing the receiving area, staging area, and transport for Contractor-furnished materials. You may request commercial storage and staging area recommendations from BAIFA
- You are responsible for loading and transport of BAIFA-furnished materials
- You must submit material requisitions as needed, specifying material descriptions and quantities required

5. The Backhaul network shall be configured to provide complete logical separation of the Express Lane Network (ELN) from the rest of the Backhaul entities and users. This includes the use of separate routing tables for the ELN.
6. For the purposes of bidding, assume the following configuration guidelines will apply. The final design and configuration will be determined after meetings with all stakeholders.
    - Combination of BAIFA-owned fiber and service provider infrastructure
    - Approximately one hundred fifty five (155) virtual local area networks (VLANs) and IP subnets must be configured.
    - Use agency provided VLAN numbering and IP addressing scheme
    - OSPF routing with multiple areas for communication with the ELN
    - SNMP community strings and network device naming standard.
7. Prior to order and procurement of Backhaul logical network electronics hardware and network management system software, the following documentation must be reviewed and approved by BAIFA:
        - Project Management Plan as described in **Part 7**, GC-78, "Project Management"
8. Prior to testing, the following documentation must be reviewed and approved by BAIFA:
    - Calculations and certifications as described in Section 86-14.01D Submittals
    - Manufacturer Qualifications as described in Section 86-14.01D Submittals
    - PIDR and FIDR documentation as described in 86-14.01D Submittals

DocuSign Envelope ID: 894511EA-295B-49EB-A393-D26A6837FDD4

- Test plans and procedures as described in Section 86-14.01D Submittals

9. Prior to system acceptance, the following must be reviewed and approved by BAIFA:
    - Qualification test results as described in Section 86-14.01D Submittals
    - Certification test results as described in Section 86-14.01D Submittals
    - As-Built documentation as described in this agreement
    - Training and O&M Manuals as described in Section 86-14.01D Submittals
    - Training provided to BAIFA as described in Section 86-14.01D Submittals

10. Maintenance payments will not commence until system acceptance is complete.

86-14.01A(1) Backhaul Locations

Work under this contract must be performed for the following locations:

1. Data Centers: Furnish, configure, install and test networking hardware and software at the following data center locations:
    - 375 Beale Street
    - Benicia Bridge Toll Plaza

2. Corridor Hubs: Furnish, configure, install and test networking hardware and software at the following Corridor Hub locations:
    - BAIFA Oakland Hub Facility, adjacent to CFH BART facility
    - Caltrans District 4 Traffic Management Center (D4 TMC)
    - Walnut Creek BART Station
    - Dublin BART Station
    - AutoMall
    - Hegenberger
    - I-80 West
    - I-80 East

86-14.01A(2) Corridor Fiber Trunk Optic Cable

Furnish, install, splice, terminate and test new single mode fiber optic trunk cables at the following locations and as shown in the Drawings:

1. In existing conduit along the I-680 Corridor from Benicia Bridge Toll Plaza to East Dublin
2. In existing conduit and new conduit installed as part of this Contract along the I-880 Corridor from Hegenberger to the AutoMall locations
3. Splice and/or patch into existing trunk fiber optic cable installed by others:
    - Between the Silicon Valley ITS Traffic Operations Facility and the AutoMall Hub
    - At and between each Backhaul BART station hub or facility and corresponding BART Train Control room
    - At and between 19th Street BART station hub or facility and Caltrans D4 TMC facility

DocuSign Envelope ID: 894511EA-295B-49EB-A393-D26A6837FDD4

- At and between the BAIFA Oakland Hub and BART CFH facility and the corresponding BART Station facilities and BAIFA hub connections shown in the network Drawings

86-14.01A(3) Work by Others

BAIFA-Furnished Equipment and Materials:

- Racks at 375 Beale Street and Benicia Bridge Toll Plaza

Utility-Furnished Equipment and Materials:

- AT&T Cellular Modems at each Backhaul Hub and Data Center Location

86-14.01B References

Applicable codes and standards

- Your work must conform in all respects to applicable industry standards and sound engineering practice.
- Contractor work and provided equipment must conform to the latest revision of the following standards and additionally Electrical Systems specification section 86-1.02 of the Contract package:
    - Federal Communications Commission (FCC) 47 CFR Part 68 - Connection of Terminal Equipment to the Telephone Network
    - Building Industry Consulting Services International (BICSI)
    - National Fire Protection Association (NFPA)
    - NFPA 70 - National Electric Code (NEC)
    - NFPA 72 - National Fire Alarm Code
    - Telecommunications Industries Association (TIA) TIA/EIA-606-A, Class 4 - Administration Standard for Commercial Telecommunications Infrastructure, current edition
    - Underwriters Laboratories (UL)
    - UL1459 - UL Standard for Safety ECB Equipment
    - UL/CSA 60960 - Safety of Information Technology Equipment
    - UL 50, Type 3R - Enclosures for Electrical Equipment
    - Electrical & Electronics Manufacturers (EEMAC) Standards
    - Institute of Electrical and Electronics Engineers (IEEE)
        - IEEE 802.1 Standards for Local and Metropolitan Area Networks
        - IEEE 802.3 Standards for Physical and Data Link Layer for Ethernet
    - National Institute of Standards and Technology (NIST)
        - SP 800 – Series of NIST special publications related to network security
        - SP 500 (selected) – Selected publications in this series apply to network security

DocuSign Envelope ID: 894511EA-295B-49EB-A393-D26A6837FDD4

- Request For Comment (RFC)
  - RFC 2576 Coexistence between Version 1, Version 2, and Version 3 of the Internet-standard Network Management Framework
- Occupational Safety and Health Standards (OSHA)
- Manufacturer's published instructions
- BAIFA and BATA Information Systems Standards and Policies

86-14.01C Definitions

Please see **Part 3, Instructions to Bidders**, 4.1, Definitions.

86-14.01D Submittals

Submittal format and content will comply with the general requirements of the Contract Specifications, Submittal Procedures, and the specific technical requirements further listed herein.

86-14.01D(1) Manufacturer Qualifications:

You must submit complete product data including description and model number, shop drawings, catalog cuts, technical literature, and software descriptions for all equipment and software provided under this contract as part of your bid response package. Any manufacturer equipment specification which does not meet the performance requirements specified herein will require Owner prequalification and approval. Acceptability of the manufacturer will be based on the manufacturer's experience, qualifications, certifications (i.e. ISO-9001), equipment reliability, and compliance with standards specified herein and full compatibility with the existing system.

86-14.01D(2) Implementation Package:

The implementation package includes plans that describe how the Backhaul network will be deployed, configured, installed, integrated and transitioned into an operational system. You must submit a draft implementation package as part of the BAIFA IFB response that will briefly describe the major tasks involved in the implementation, the implementation schedule, the overall resources needed to support the implementation effort (such as hardware, software, personnel, training necessary, facilities and materials) and site-specific implementation requirements, including assumptions on BAIFA and third party resource availability, coordination and support. You must update the implementation package during the preliminary and final implementation reviews. The implementation package must, at a minimum, include the following plans:

- Hardware and Software Implementation Plan – Contractor must describe how the Backhaul network hardware and software will be implemented, including deployment and installation across the environment.
- Network Implementation and Integration Plan – Contractor must describe how the Backhaul network protocols, services and features will be implemented, including hardware and software configuration and integration into the environment.

DocuSign Envelope ID: 894511EA-295B-49EB-A393-D26A6837FDD4

- Network Performance and Security Management Plan - Contractor must describe the service level monitoring and management; backup and recovery; hardware, software and firmware upgrade and update; risk assessment methodology, security monitoring and management; security incident management, availability and assurance; Public Key Infrastructure (PKI) plan for certificate services needed for Backhaul network; and reporting features associated with the Backhaul network when it is implemented. Conformance to BAIFA Network Management and Security Management policies should be discussed, when applicable.
    - Additionally, you will perform an information security risk analysis of the Backhaul network as part of the preliminary and final implementation review. The risk analysis shall be used to inform the security controls implemented by You for the Backhaul network. All security controls must be reviewed and accepted by BAIFA before implementation. The risk analysis methodology and control selection must follow generally accepted industry guidelines and practices, such as those in the NIST information security series of publications.

86-14.01D(3) Preliminary Implementation Review (PIDR) Requirements:

Contractor must include the following information as part of the PIDR submittal package for the following:

1. Network architecture to be implemented, including design specifications provided by BAIFA under this Contract, including:

    - Shelf layout and inventory within equipment chassis
    - Network switch, router and firewall port mappings and configuration
    - Board level dipswitch or strap settings
    - Node identification information
    - IP address, Subnet mask and default gateway assignments
    - VLAN assignments
    - QoS Configuration
    - Layer 2 and Layer 3 High Availability configuration and topology (i.e. VRRP/HSRP, Switch Stacking/VSS, 802.3ad link aggregation groups/Etherchannel)
    - SNMP and network management configuration
    - SNTP configuration
    - Network Firewall and IPS configuration
    - All ACL lists & routing tables
    - RSTP/MSTP configuration and topology
    - Node name and network designation
    - Usernames and passwords for all access levels

DocuSign Envelope ID: 894511EA-295B-49EB-A393-D26A6837FDD4

2. OOB management connections
3. Network Management System (NMS) Hardware, Network and Software Configuration
4. Network security risk analysis and control selections
5. Network Security Configuration
6. Material Specification Data Sheets and Product Samples. The Construction Manager shall submit complete product data including description and model number, shop drawings, catalog cuts, technical literature, software descriptions, and samples (as requested by BAIFA), for all equipment and software provided under this contract.
7. Identification and specification of all external interfaces to existing network components, other subsystems provided under this contract, and to any work performed by other Contractors.
8. Descriptions of required modifications to existing equipment in order to interface new network
9. Preliminary fiber optic link loss budgets for all fiber optic spans as described in **Part 10, Construction Details.**

86-14.01D(4) Final Implementation Review (FIDR) Requirements:

Contractor must include the following information as part of the FIDR Technical architecture submittal package for the following:

1. Network architecture to be implemented, including:
    - Updated PIDR information. All drawings, calculations and design information shall reflect a final design.
    - Actual fiber optic link loss budgets for all fiber optic spans installed under this contract, sufficient to show that all proposed spans meet published link loss budgets.
    - Cable pair and fiber strand usage diagrams
    - Local Distribution Frame (LDF) wiring and termination assignments
    - Fiber Distributions Panel (FDP) components and equipment
    - Interconnect and wiring diagrams to include Power supply and fuse panels
    - Complete wiring diagrams for all field equipment, including intermediate patch panels, protection, and interconnect equipment provided and installed under this contract
    - Complete wiring diagrams for all equipment installed in existing facilities, including intermediate patch panels, termination, protection, and interconnect equipment provided and installed under this contract
    - Complete terminal cabling and interconnection diagrams for all Outside Plant (OSP) fiber optic cable provided and installed under this contract
    - Proposed rack layouts and elevations for new or modified equipment, including assembly drawings, installation drawings, component level inventories and parts lists
    - Proposed revision of all equipment operating software with descriptive documentation, including, but not limited to:

DocuSign Envelope ID: 894511EA-295B-49EB-A393-D26A6837FDD4

- Release Notes
- Product Bulletins
- Applicable Field Notices
- Design Guides

86-14.01D(5) Calculations and Certifications

1. Calculations – General

Calculations must be performed and included as listed in the PIDR and FIDR.

- Fiber Loss Calculations as specified in **Part 10, Construction Details.**

2. Certifications - General

- All test equipment used shall have a current calibration certificate dated no more than one year prior to the test
- Manufacture and Personnel Certifications:
- Copy of the following certifications shall be included:
- ISO certification for all proposed manufacturers
- Equipment Manufacturer Certification Installation Training for any technician performing installation, test, or turn-up work on any equipment (i.e CCNA, EXFO, BICSI)
- Cable Certifications
- Submit cable qualification data, including the following:
- Listing of State Roadway and Transit Owner Customers: Provide a list of names of five (5) state roadway and transit properties to which the manufacturer has provided cables similar to those required by the Specifications
- Cable Manufacturer's Quality Plan
- Cable Manufacturer’s Qualification Report
- Installation Qualification Test Documentation

86-14.01D(6) Test Plan and Procedures

General:

An acceptable test plan must include all information and testing matrix to clearly explain how equipment is to be tested to provide a complete and working system. This plan should include individual subsystems testing as well as complete overall system testing that proves the functionality of the finished product. This test plan should clearly explain and document how each subsystem and overall systems will be tested and verified. The final test plan will be reviewed and accepted by an appropriate BAIFA engineer before it will be implemented.

DocuSign Envelope ID: 894511EA-295B-49EB-A393-D26A6837FDD4

Objective:

The objective of your test plan will be to provide BAIFA with a series of test procedures for qualifying and certifying the product features and functionality of the components implemented as the BAIFA Backhaul network as they are implemented per corridor phase. A summarization of these tests follows:

- System Configuration Testing: The objective is to provide testing that shows the accessibility of the management interface(s) of the proposed network hardware and software. An introduction and familiarization of the configuration system(s) along with the user interface(s) will be included to augment this testing.
- Traffic Prioritization Testing: The objective is to provide testing of the network switching and routing equipment*'s* hardware-based queues. This testing will highlight the network traffic prioritization capabilities, and Quality of Service (QoS) features.
- SNMP Management Capabilities Testing: The objective is to demonstrate how the BAIFA can use the network system hardware and software SNMP MIBs to provide remote platform management. This testing will also ensure that you will be able to provide their monitoring and management warranty services.
- IP Forwarding Functionality Testing: The objective is to verify the IP forwarding functionality and features. The test includes IP traffic forwarding, verification of traffic separation via separate VRF instances, route functionality and redundant route capabilities. This testing will use different packet types to verify that all possible traffic will be forwarded. You will coordinate with BAIFA and the TSI to ensure this suite of tests also include forwarding packets captured from the BAIFA Toll ELN System.
- Performance Testing: The objective is to show the connectivity and performance of the core and distributed switching architecture, including firewalled links, with standard Internet protocols simulated at expected traffic levels.
- Dependability and Availability Testing: The objective is to show the proper functionality of multiple interfaces and connections. The network hardware manufacturer implementation of Open Shortest Path First (OSPF), spanning tree (MSTP, RSTP, etc…), and link aggregation will be tested for accuracy and performance. The N+1 configuration of interfaces, switch fabrics and power supply modules will be faulted and tested. All this testing will be done while hot-swapping the individual modules. Redundant and stacked hardware configurations will be tested for local failover and redundancy. At a minimum, testing will simulate failures during the following hardware process states or functions: startup/bootstrap, run, upgrade and maintenance.
- Security Testing: The objective is to verify the BAIFA security policies for the Backhaul network have been implemented, is enforced and is auditable. The Contractor is not permitted test any existing production networks, such as BAIFA, TSI, stakeholder or 3rd party production networks which interface with the

DocuSign Envelope ID: 894511EA-295B-49EB-A393-D26A6837FDD4

Backhaul. If necessary, You will apply additional coordination with BAIFA to ensure the security testing does not include, affect or interfere with existing production networks.

- Network Management Reporting: The objective of this test is to show the proper configuration, functionality and features of the implemented Backhaul Network Management System (NMS). NMS data collection, alerting and reporting capabilities and features will be tested, including the collection of data during commission testing. Following BAIFA acceptance of all commission testing, the testing data will be purged from the NMS system.

Test Approach:

The test approach must at a minimum, consist of the following:

1. Qualification Testing:
    - Factory inspection and acceptance including 72 hour "burn-in" quality testing
    - Network Switch, Router and Firewall (NSRF) Configuration Management Access and access control.
    - Network Management System (NMS) Hardware and Software Configuration Management Access and access control.
    - End-user to NSRF & NMS hardware and software through two Network Switch platforms via 10GigE and simulated Metro-E Backbone.
    - SNMP MIB Management NSRF and NMS features.
    - IP Forwarding functions and features.
    - QoS/CoS Network functions and features.
    - IP Forwarding Performance and Capacity testing of Core and Distribution 10GigE and Gigabit interfaces.
    - Failover reliability of NSRF OSPF routing protocol implementations.
    - Fault-Tolerance, Redundancy and Hot-Swapability of all modules of applicable NSRF hardware.
    - Application Packet Transfer Testing.
    - Security Filtering, Malicious packet detection and prevention, logging and auditing implementations.

2. Certification Testing:
    - End-user to NSRF & NMS hardware and software through two Network Switch platforms via 10GigE and simulated Metro-E Backbone.
    - SNMP MIB Management NSRF and NMS features.
    - IP Forwarding functions and features.
    - QoS/CoS Network functions and features.
    - IP Forwarding Performance and Capacity testing of Core and Distribution 10GigE and Gigabit interfaces.
    - Fail-Over Reliability of NSRF OSPF routing protocol implementations.

DocuSign Envelope ID: 894511EA-295B-49EB-A393-D26A6837FDD4

- Fault-Tolerance, Redundancy and Hot-Swapability of all modules of applicable NSRF hardware.
- Application Packet Transfer Testing.
- Security Filtering, vulnerability scanning and remediation, malicious packet detection and prevention, physical port level and console security, security incident logging, alerting and auditing at a data center and roadside location.
- System backup and restoration, configuration management

3. Continuing Certification Testing:
    - ICMP verification across the fiber and Metro-E leased lines from the primary and secondary data center locations.

You will provide qualified staff to support all tests required by these Specifications. You will submit the following test plans and procedures:

1. Test Program Plan: You will include all the required information in the Test Program Plan as required by these Specifications and in accordance with industry and manufacturer accepted testing guidelines
2. Factory Test and Offsite Lab Test Procedure: You will submit a complete factory test and offsite lab test procedure to satisfy all the requirements of this Specification.
3. Qualification Test Plan: You will provide a qualification plan for inspection, assessment of quality, condition and suitability of hardware, software and all subsystems prior to deployment. The qualification plan will also address factory acceptance, inspection, turn-up & burn-in, and pre-deployment lab testing. For the lab testing, simulated environment requirements will be included. Simulated data traffic at expected loads will be included.
4. Certification Test Plan: You will provide a certification testing plan for field testing and systems integration. Simulated data traffic at expected loads shall be included.
5. Field Test Procedure: You will submit a complete field test procedure to satisfy all the requirements of these Specifications.
6. You will coordinate and work with BAIFA and the TSI to support Toll System acceptance testing for each corridor. Changes to the Backhaul network made after acceptance of any test may require regression testing. Regression testing due to system changes necessary to correct misconfiguration by You shall be required at BAIFA's discretion and at no additional cost to BAIFA. Regression testing due to BAIFA directed changes unrelated to misconfigurations by You shall be at BAIFAs discretion and cost. You will coordinate with BAIFA and the TSI to provide on-site support during OFIT testing on the I-680 corridor and to provide remote off-site network support for Express Lanes Network testing of data traffic between the roadside ELN network to the data centers as required by BAIFA.
7. You will coordinate and work with BAIFA and Caltrans District 4 to support operational testing of the Caltrans Traffic Management System (TMS) ITS equipment impacted by the construction and installation of Backhaul conduit and fiber optic cable, including submission of Backhaul fiber optic cable test results for approval by a Caltrans Engineer for the following:
    - 72-Strands of Backhaul Fiber Optic Cable installed and tested as part of this Contract designated for Caltrans use
    - Fiber optic drop cables installed, spliced and terminated into TMS ITS cabinets as part of this contract and designated for Caltrans use.

DocuSign Envelope ID: 894511EA-295B-49EB-A393-D26A6837FDD4

8. All test instruments and equipment required to conduct tests will be available and ready-for-use not less than one (1) week in advance of test date. The term ready-for-use means properly matched for test parameters, properly calibrated, sufficiently supplied with leads, probes, adapters, and stands, as required to conduct a particular test.
9. You will verify that all test equipment is properly calibrated by the manufacturer prior to use.
10. You will submit equipment calibration data for all equipment utilized to conduct test, as part of each specific test report.
11. Test equipment which cannot be verified as properly calibrated shall not be used for testing. Any test conducted utilizing improperly calibrated test equipment shall be rejected and retested at no additional cost to BAIFA.
12. Test Records: You must submit the Test Records for review ten (10) Working Days after the completion of each test.

Test data will be provided in Static and Dynamic Format:

- Static format will be compatible with all project specifications and requirements
- Dynamic format will be in native testing machine format suitable for additional analysis
- Provide all additional software as required to read native format.

86-14.01D(7) As-Built Requirements

You must submit all as-built drawings and configuration details, such as running/saved configurations, for inspection and approval prior to acceptance of the Work. As-built drawings will be an update of the installation details. As-built drawings must be drawn using Microsoft Office, Microsoft Visio and/or Bentley Microstation. Hand mark-ups (red-lines) shall not be acceptable.

As-Built Drawings and Configuration:

You must supply all as-built drawings and configuration details for the network implementation within ten (10) working days of End-to-End Certification testing. These shall include, but not be limited to, the following items:

1. Schematic/Block diagram: Complete system block diagram indicating all components, interconnection and cabling.
2. Wiring diagram: System wire and cable designation schedules indicating origin, terminus, cable type and cable designation at each demarcation location.
3. Circuit diagram: A diagram document of how components are interconnected by functions, cable terminations, terminal identification and cable designation (under no circumstance will wiring schematic or typical wiring details be considered as circuit diagram.)
4. Provide elevation drawing of the rack layout.
5. Configuration scripts (i.e. running-configs) for network hardware and software
6. Detailed Network Layer 2 and Layer 3 logical topology
7. Security filtering matrix for firewall and switches, showing authorized protocols, source, destination and action

DocuSign Envelope ID: 894511EA-295B-49EB-A393-D26A6837FDD4

8. Configuration details for any VPNs configured as part of this contract
9. Configuration details for all Virtual Routing and Forwarding tables (VRFs) configured as part of this contract
10. NMS Host physical topology and Guest virtualized environment
11. Final configuration settings for all hardware and software
12. Conduit and cable schedule being used for this system
13. Cables label schedule
14. Fiber optic cable assignments, maps, diagrams and spreadsheets
15. Network System Design Documentation
16. Network and System Administration records including identification and authentication information such as local and centralized usernames, passwords, VPN encryption settings, and encryption keys.
17. Network and System Administration transition plan and procedures including steps to administer, monitor and verify physical and logical access controls, identification and authorization, remote connections such as VPNs, physical access to cabinet network electronics, and any other information necessary to complete a post-warranty network and system administration from You to BAIFA IT.

86-14.01D(8) Operation and Maintenance (O&M) Manuals

You must provide individual equipment manufacturer issued manuals containing all technical information on each type of equipment installed. In the event such manuals are not available from the manufacturer, You shall provide the same information and compile within the manual. These documents are to be provided in both paper and PDF formats.

Each manual shall contain a systems parts list, a parts list for individual components, detailed schematics and recommended maintenance procedures. Advertising brochures or operational instructions shall not be considered as technical manuals. You will deliver three (3) complete sets of all shop and circuit drawings, wiring schedules and single line block drawings in hard copy.

Additional content to be covered in the O&M manuals, at a minimum:

1. Operations and Monitoring Plan which supports BAIFA operations, supervision, monitoring, troubleshooting, evaluation and security of the Backhaul network. You will work with BAIFA IT during the development of the operations and monitoring plan to address BAIFA IT management concerns.
2. Full technical description of product including illustrated pictures of parts and operational concepts
3. Theory of operations
4. Procedures and guidelines for BAIFA policy-compliant operations of the Backhaul network
5. Network and system administration procedures
6. System Failure and Recovery Procedures
7. System and equipment specifications
8. Ordering information and part number identification
9. Configuration drawings for panels, racks and screens
10. Equipment options

DocuSign Envelope ID: 894511EA-295B-49EB-A393-D26A6837FDD4

11. System configurations (for example: DIP switch setting and software control settings)
12. Applications engineering (as appropriate)
13. Installation and commissioning test procedures
14. Operations of all user controlled functions
15. Software instructions and procedures
16. Preventative maintenance test procedures and schedules (daily, weekly, monthly, quarterly, and annually)
17. Trouble shooting guide and flow chart
18. Startup and shutdown procedures
19. Backup and Restoration procedures
20. Lockout/Tagout procedures (as appropriate)
21. Return and repair procedures with vendor technical support and wiring schematics
22. Mechanical drawings, block and level diagrams, and wiring schematics
23. Registration form for document tracking by vendor
24. Provisional parameters stating range, default setting, description and procedure
25. Alarm clearing procedures
26. Material and safety data sheets
27. Contact information for warranty support including; company name, address, telephone number, email address, and company representative
28. Contact information for non-warranty support including; company name, address, telephone number, email address, and company representative
29. Documentation of hardware/software maintenance contracts (and renewal)
30. Fiber assignment spreadsheet

86-14.01D(9) Quality Assurance

1. Applicable Standards and Codes

Your design and installation shall comply with all applicable Standards and Codes as listed herein. All equipment shall comply with the latest version of standards as applicable herein.

2. Product and Workmanship Requirements

All equipment provided under this Section shall be UL listed.

- Discontinued product models, refurbished equipment, or products scheduled for end-of-life, end-of-sale, or end-of-service within one working year of the installation date shall not be used.
- All products specified herein shall be subject to approval based on your ability to demonstrate adherence to the specified requirement and approval of the manufacturer's quality process (i.e. ISO-9001).
- All products proposed shall have been proven in use demonstrating reliability and quality in rail, toll, ITS or similar transportation application for no less than two (2) years.
- Workmanship shall be the best quality, executed by workers experienced and skilled in the respective duties for which they are employed. Immediate

DocuSign Envelope ID: 894511EA-295B-49EB-A393-D26A6837FDD4

notification is required if work cannot be completed in a manner that meets the requirements as set out in the Specifications and Drawings.

- All products are to be new, of minimum or better quality than specified, and conforming to the standards of UL
- All grounding shall comply with requirements of the National Electrical Code, specifications, recommendations of the manufacturer, local design guidelines, and the direction of the local authority having jurisdiction. Immediate notification is required where these requirements differ. You shall adhere to the most stringent of these requirements, codes or standards.

3. Manufacture Pre-Qualification Requirements

- All manufactures of equipment must be shown to have been established in their current field of business for no less than ten (10) years.
- All new equipment provided and installed under this contract shall be compatible with existing equipment installed in field and data center locations.
- Manufacturers shall be ISO 9001 certified.
- All products proposed shall have been proven in use demonstrating reliability and quality in rail, toll, ITS or similar transportation application for no less than two (2) years.

4. Safety

Personnel installing equipment shall be required to follow the CALTRANS District 4 safety rules and procedures while performing any field Work.

86-14.01D(10) BAIFA Review of Your Submitted Documentation

BAIFA shall be allowed two (2) review cycles of 10 days each in duration for review and approval of documents listed in this Section 86-14.01D, Submittals.

86-14.02 NETWORK MANAGEMENT

86-14.02A Summary

You shall furnish and install a Network Management System (NMS) to monitor, alarm and remotely configure all communications devices that connect to the Communications Systems as well as provide global and device specific configuration and protocol management, troubleshooting and root-cause analysis, security, system performance, and health monitoring for the Backhaul communications network.

The NMS shall be chosen and installed according to the following criteria: Network Software and Configuration Management, Auditing Capability, Discovery and Monitoring, Change Management, Security Management, Performance Management, Security Management and Reporting, and additionally:

1. A web-based Graphical HMI for physical and logical system configuration to enhance troubleshooting of the Communications System. Any database software that is required to support the NMS shall be included as incidental with the NMS software
2. Utilize BATAnet-provided centralized AAA for user authentication

DocuSign Envelope ID: 894511EA-295B-49EB-A393-D26A6837FDD4

3. Provide multi-level or role-based access control
4. Utilize BATAnet-provided active directory for access control
5. Utilize BATAnet-provided RADIUS remote access service
6. Support any common network device that supports SNMP v1, SNMP v2, or SNMP v3. Configure the NMS to provide BAIFA read/write access for administration purposes.
7. Compatibility with existing BATAnet's network management solution, Solarwinds NPM.
8. Provide hardware management of servers, arrays, tape library and other network electronics.
9. The NMS subsystems, including the Security Management and Reporting subsystems must each be installed on separate guest virtual servers such that each guest virtual server is dedicated to one task or function, where possible. The Reporting subsystem must be located in a DMZ accessible only to BAIFA stakeholders. You shall work with BAIFA to identify, configure and provide secured network connections into the Reporting Subsystem DMZ for BAIFA and its stakeholders.
10. Provide resilience and failover in the event of NMS hardware failure.
11. Provide N+1 redundancy of physical Host servers.

86-14.02B Network Software and Configuration Management

1. Provide functions to capture, modify, print and save and restore running configurations on all Backhaul network communications devices
2. The NMS must provide functions to update and roll back firmware to all Backhaul network communications devices via TFTP and additionally, any of the following:
    - Secure File Transfer Protocol (SFTP)
    - SSH
    - Hypertext Transfer Protocol Secure (HTTPS)

3. Provide centralized configuration management functions for the following:
    - Naming and detailed description data for managed objects.
    - Track maintenance and work history
    - Assignment and tracking of scheduled and manual maintenance
    - Schedule automatic upgrade and update of software and firmware for Backhaul network, including network servers, network switches, routers, firewalls, management software and ancillary hardware such as UPS.
    - Manual upgrade and update of software and firmware for Backhaul network, including network servers, network switches, routers, firewalls, management software and ancillary hardware such as UPS.
    - Software and firmware repository for Backhaul network, including network servers, network switches, routers, firewalls, management software and ancillary hardware such as UPS.
    - Polling and validation of software and configuration for Backhaul network, including network servers, network switches, routers, and firewalls.

DocuSign Envelope ID: 894511EA-295B-49EB-A393-D26A6837FDD4

4. Provide a single management platform to centrally manage the configuration, security policies, perform forensic analysis and generate reports across existing BATAnet Firewalls and Backhaul Firewalls.

86-14.02C Auditing

1. Listing of all specified managed devices with model number, firmware and software loaded on each device with version number and patch number where appropriate.
2. Log of all failures associated with a device or incident to include date and time, alarm severity, alarm name, alarm description, and alarm or issue resolution.
3. Log of all user account access, NMS activity and changes to the NMS
4. Logging to default or user defined location and automatic archiving to remote location. Hardware and software necessary to support archiving store.
5. Date and time stamping of all NMS collected log data.
6. Syslog server functionality to record all SNMP traps and log all commands entered into each network device.

86-14.02D Discovery and Monitoring

1. Network management and monitoring must occur in-band wherever possible. You will identify which equipment will be monitored in-band, out-of-band, and which equipment, if any, cannot be monitored/managed via the network.
2. Layer 2 / 3 network discovery must be provided with licenses for up to one hundred forty (140) managed devices, including all interfaces, hardware and software subsystems. These devices are inclusive of the network devices described herein, but have the added requirement of automated network discovery and mapping capability.
3. The NMS must be scalable to allow for future growth of the BAIFA Backhaul system. The NMS must provide for the ability to expand the licenses in the future to continue to monitor new devices as they are added. The initial BAIFA deployment shall contain approximately one hundred forty (140) managed devices. You will license all network connected Backhaul devices for monitoring or one hundred forty (140), whichever is greater. The NMS must be expandable to handle four hundred (400) devices or more with no additional hardware requirements. For bidding purposes, the initial deployment shall be one hundred forty (140) managed devices, with the capability to expand to four hundred (400) devices through additional license purchases, which are not required as part of this bid.

86-14.02E Change Management

Centralized Change Management functions including the following:

1. Installation, modification and tracking of network configuration parameters (hardware and software) to enable the continuous operation of services. The NMS must be able to reconfigure the equipment electronically and remotely. All interface models, interface ports and system controller options and settings shall be configurable, without using hardware option settings. A replaced module shall have its options automatically downloaded from the database contained in the online memory.

DocuSign Envelope ID: 894511EA-295B-49EB-A393-D26A6837FDD4

2. Contingency reconfiguration. A power failure outside of equipment causing a loss of service must, upon power restoral, initiate a restoral to full service without operator intervention. The system must be fully operational (OS interfaces, alarm resets, PM processing) within ten (10) minutes of system restart. The system must be in service within two (2) minutes of a system restart.
3. Reporting of change-of-state of all communications equipment, where applicable
4. Network path and logical topology management with provisioning, modification and auditing capabilities
5. Remote provisioning of communications equipment, facilities and cross-connects. The following service provisioning functions shall be available both locally and remotely:
    - Establishment/removal/rearrangement of connection
    - Placement of equipment into service
    - Removal of equipment from service
    - Software downloads capability of new generic releases to communications equipment, where applicable.

86-14.02F Security Management

The network must be protected from unauthorized, incorrect or accidental use, modification or disclosure. A system administrator security system shall be available for implementation. Security requirements include the following features:

1. Backup and restore features to protect network switch/router/firewall configurations, network storage device configurations and BAIFA network management virtual environment critical server and Network Management console/workstation configurations. This will save a copy of the equipment or device's configuration information in order to restore a device, operating system, database or application later, if necessary, or to load an identical configuration to a new device or server, if necessary.
2. Control of network user access
3. Logging and secure storage of all NMS user activity for convenient access
4. Capture, log, monitor, analysis, correlation and reporting of security events on the Backhaul network.
5. Security violations alerting, notifications and reporting.
6. Security Dashboard views to support identification of patterns and activities that do not conform to standard network communications
7. Access to the Backhaul network management interfaces and the NMS shall be limited accordingly. The system must be designed to protect the sensitivity, availability, privacy and integrity of the information transported and processed.
8. Security vulnerability scanning and reporting.
    - The NMS must support scheduled and manual vulnerability scans of the Backhaul network, including but not limited to: network switches, routers, firewalls, server and storage array hardware, operating systems, applications and databases deployed as part of the Backhaul system.
9. Secure storage and integrity verification of Backhaul Network logging data using cryptographic methods such as 128-bit or higher encryption of log files or cryptographic hashing.

DocuSign Envelope ID: 894511EA-295B-49EB-A393-D26A6837FDD4

86-14.02G Performance Management

Provide centralized performance management functions for the following:

1. Collection of network traffic statistics
2. Network alarms, performance and health status to NMS
3. Historical files of alarms, commands messages and operator actions
4. Message log retrieval for past events analysis
5. Event logging via syslog facilities
6. Monitoring and polling of Backhaul network managed objects
7. Real-time traps and alerting
8. Incident notification via email, SMS and NMS administration GUI
9. Root cause analysis
10. Generation of graphical data to support performance trend analysis
11. Monitor and report change-of-state of all communications equipment, where supported by communications equipment.

86-14.02H Fault Management

1. Fault Management must provide the detection, isolation and correction of abnormal network conditions, and include the monitoring of: 1) Automatic/manual diagnostics: 2) Diagnostics shall be performed on any Network Switch and other communications equipment, whether in service, redundant or out-of-service. All diagnostics shall be available on demand via a software command.

2. Provide centralized Fault Management functions for the following:

    - Work-flow based escalation of incidents reported to the NMS
    - Incident classification
    - Incident and event correlation
    - Configurable thresholds
    - Alert Notification via email, SMS and NMS administration GUI

3. Provide failure and maintenance recording with trend tracking and predictive failure analysis capability

86-14.02I Reporting

The NMS must be able to compile status and alarm data from the various registers into summary reports for recall and demand. At a minimum, the NMS must have the capability to compile this report up to 24 hours in duration. The NMS must include report customization based on the following criteria:

1. attributes of the object itself
2. network management system activity
3. group classifications
4. custom labels
5. time period (up to at least 395 days)
6. duration of event or incident

DocuSign Envelope ID: 894511EA-295B-49EB-A393-D26A6837FDD4

7. device or object
8. the event or incident
9. Operating system event logs and device syslog events

Provide centralized Reporting functions for the following:

10. Track and report BAIFA policy compliance
11. Schedule reports to be automatically generated, and optionally, emailed to staff
12. Manual and scheduled archiving. Archiving capacity must accommodate BAIFA's Backhaul data management policies (at least 395 days)
13. Summarization and filtering of data
14. Role-based access to operational and reporting data is restricted using the security principles of least access

86-14.02J Training Courses

General:

1. You shall provide training for BAIFA's network operations/maintenance personnel and/or BAIFA's authorized representatives. You shall develop a Network Training Plan prior to the development of training materials that meets the requirements of this section. The training must use the selected vendor's hardware and software furnished by you and generally consists of the following:
2. Content:
    - Training on the proper set up, use, security and configuration of the network equipment and software, including all management software used in the Backhaul network
    - Training on the proper set up, use, security and configuration of the Management Server Virtual Environment, including server and storage array hardware and software, operating system, virtualization, configuration and protocols
    - Training for any unique or special circumstances encountered during installation and configuration of the Backhaul network
    - Training incorporates all operations and maintenance manuals furnished by you as part of this contract

On-Site Training:

3. General:
    - You shall supply on-site, network-specific training.
    - You shall train a minimum of three (3) of BAIFA's network operations/maintenance personnel and a minimum of one (1) of BAIFA's authorized representatives.
4. Before final system acceptance for Segment I, you will provide BAIFA training at the following locations:
    - 375 Beale Street Data Center
    - Benicia Bridge Toll Plaza Data Center
    - BAIFA Oakland Hub (BOH) location
    - Caltrans D4 TMC

DocuSign Envelope ID: 894511EA-295B-49EB-A393-D26A6837FDD4

- One other BAIFA-identified location

5. Topics to be addressed are:
    - Proper installation procedures
    - Basic troubleshooting to identify failed network electronics
    - Steps to perform if any of the network electronics fails and has to be replaced
    - Description of the features and architecture of the network electronics
    - Installation, configuration, and maintenance of the network electronics
    - Configuration of Layer 2/3 switching including VLANs, router ports, and 802.1Q
    - Configuration of Link Aggregation (IEEE 802.3ad) / EtherChannel (Layer 3)
    - Configuration of Switch Stacking / VSS
    - Configuration of DHCP Relay and UDP Forwarding, if configured
    - Description of Layer 3 routing support on the network electronics including Open Shortest Path First (OSPF), and Protocol Independent Multicast (PIM)
    - Configuration and application of Virtual Routing and Forwarding (VRF)
    - Configuration of Virtual Routing Redundancy Protocol (VRRP) / Hot Standby Routing Protocol (HSRP)
    - Configuration of network links including GigE and 10GigE Ethernet ports
    - Definition and discussion of the management and security options including SNMP, RMON/SMON, SYSLOG and RADIUS
    - Configuration and application of Quality of Service (QoS) features
    - Setup, configuration, monitoring, troubleshooting, backup and recovery of management server virtual environment
    - Installation, configuration, operation and maintenance of Backhaul NMS hardware and software
    - Procedures on how to generate, track and modify service requests with the Contractor, including use of contractor web-based service ticket portal
    - Upon completion of all installations, You shall provide an overall review training session to address:
        a. Problems and corrective action taken during installation
        b. Configuration changes that differed from initial training
        c. Other questions or issues that arose after initial training or before final system acceptance of Segment I.

6. Backhaul Specific Training:

The topics to be covered must include:

- Operating and configuring the network devices
- Creating and modifying user's access rights, logins and passwords on Network Management and Security Management Software
- Managing the network environment
- Fault Isolation
- Out-of-Band Management
- Scheduled and ad-hoc report generation
- Interconnection of data switches
- Explanation of Backhaul Virtual LANs (VLANs) and IP addressing schemes

DocuSign Envelope ID: 894511EA-295B-49EB-A393-D26A6837FDD4

- Layer 2 and Layer 3 High Availability (i.e. OSPF, Etherchannel, VRRP/HSRP) routing and switching topologies and configurations
- VRF configurations and troubleshooting
- Determining IP routes
- IP traffic management on the core and distribution network electronic switching hardware using access lists
- IP traffic inspection and policy enforcement using the selected vendor's firewall feature set, including but not limited to:
- Explanation of the basic firewall technology, features, hardware, and licensing options of the security appliance
- Implementation and troubleshooting basic security appliance connectivity, VPN connectivity, and device management plane features
- Configuration and verification of security appliance network integration
- Configuration and verification of security appliance policies
- Configuration and verification of high availability and failover on security appliances
- Configuration and verification of IPSEC and SSL VPN tunnel connections on security appliances
- Configuration of content and software updates
- Configuration of reporting server, scheduling and manual generation of canned and customized reports
- Implementation, configuration and tuning of IPS
- Security Incident Response training to handle and respond to computer and network security incidents in the Backhaul network environment, including how to handle a variety of incidents (i.e. natural, man-made, insider and outsider attacks, accidental and malicious, etc…), forensics and evidence preservation, CIRT team roles, risk assessment methodologies, creation of incident response plans, policies and procedures, laws and regulations related to incident handling, and incident recovery.

86-14.03 GENERAL WORK AND INSTALLATION CRITERIA

86-14.03A Segment I

Contractor shall be responsible for:

1. All network electronics and software installation Work necessary to complete the indicated network, except as specified or indicated otherwise.
2. All Work must be done in a neat and professional manner, in accordance with all applicable standards and practices.
3. All installation and testing must be performed by qualified network technicians with a minimum of five (5) years of experience in the installation and testing of similar equipment.
4. All equipment must be installed, configured and tested in strict accordance with the original manufacturer's instructions.
5. All equipment must be placed into operation in accordance with specified function.
6. Install equipment in the locations specified or indicated.
7. All equipment chassis must be solidly grounded in accordance with NEC.
8. Install and wire all equipment in accordance with the Drawings. Any variations shall be noted on the site copy of contract Drawings and indicated on the as-builts.

DocuSign Envelope ID: 894511EA-295B-49EB-A393-D26A6837FDD4

9. All network electronics and software must be free of all known security vulnerabilities, worms and viruses at the time when testing begins.
10. You will submit detailed configuration, implementation and backout plans for approval by BAIFA before Work begins.
11. A Sequence of Work must be developed and provided to BAIFA for approval before Work begins, assuming the following priorities for BAIFA in order of importance:
12. Core and I-680 Hub and corridor connectivity (see plans for locations of communications Hubs):
    - Benicia Bridge Toll Plaza Data Center,
    - 375 Beale Street Data Center
    - Walnut Creek Hub,
    - BAIFA Oakland Hub (BOH) ,
    - Dublin Hub,
    - BART 19th Street Station and Caltrans D4 TMC Fiber Optic Cross-Over,
    - Caltrans D4 TMC,

13. Core and I-680 Network and Backhaul NMS Integration into BATAnet
14. Core and I-680 configuration and integration into Backhaul NMS
15. Core and I-680 Network Interface and routing for ELN Network Data Traffic
16. Core and I-680 Network Interface and routing for ECN and ITS Data Traffic

Contractor shall:

1. Install all items at the specified sites.
2. Mount equipment in racks or cabinets and bolt securely in place.
3. Install all power cables necessary to connect the network equipment to the local sources of power as indicated.
    - For each network electronics hardware with redundant power, plug redundant power into a different PDU.
4. Install all necessary fiber optic patch cords within individual racks to make all necessary network connections.
5. Install all necessary Ethernet data cables within individual racks to make all necessary network connections.
6. All wiring and cabling, including copper data and power cables, shall be neatly labeled, bundled, tie-wrapped, and secured. Wire labels shall be plastic permanent-type labels. Coordinate wiring and cabling labels with Your shop drawings.
7. Install owner-provided asset tags, including serialized assets tags for devices greater than $5000.
8. Utilize existing cable management where available. In existing racks that do not have cable management, provide horizontal and vertical slotted duct cable management (with removable covers).
9. Ensure new cable management is compatible with the existing rack.
10. Install and configure Network Management Server Virtual Environment.
11. Perform any upgrades, installation, or maintenance within the coordinated and specified time period as dictated by BAIFA.

DocuSign Envelope ID: 894511EA-295B-49EB-A393-D26A6837FDD4

86-14.03A(1) Configuration

86-14.03A(1)(i) General

Your configuration responsibilities will include:

1. Back up all network element configurations to both a hard disk on the BAIFA Management Server and a recordable DVD, the latter of which shall be submitted to BAIFA.
2. Perform configuration of the Core Managed Ethernet Switches, Distribution Managed Ethernet Switches, Access Managed Ethernet Switches, Firewall Appliances, Remote Environmental Monitoring Hardware and software, UPS hardware and software, IP-connected PDU hardware and software, Terminal Servers, Network Management Server Virtual Cluster Environment, Remote Access and Site-to-Site Backhaul VPNs, all Network management and Security management software and servers specified under this contract, Server Operating System Software, Firmware and any BAIFA-owned network equipment that is connected to the Backhaul to insure adequate operation and function.
3. Configure all network equipment with the correct names, VLANs, IP addresses, routing protocols, static routes, access control lists, QoS parameters, port trunking, link aggregation/EtherChannel (Layer 3), VSS/stacking configuration, High Availability (HA) protocol such as VRRP or HSRP, routing protocols such as OSPF, and any other specific network technology appropriate to conform to the contract specifications, design in the Drawings and BAIFA approved FIDR submittals.
4. Tune HA, layer 2 and layer 3 protocols to conform to industry standard / manufacturer recommended failover times.
5. Configure OSPF protocol on participating network electronics, including OSPF area(s), Designated Router, Backup Designated Router(s), area border routers and/or autonomous system border routers. Configure OSPF preferred paths based on link costs. Work with BAIFA and TSI contractor to tune OSPF timers and other parameters.
6. Configure Virtual Routing and Forwarding tables (VRFs) on Core and Distribution switches to provide logical isolation of the ELN from the remainder of the Backhaul network.
7. On the Core Ethernet Switches, Distribution Ethernet Switches, and any Ethernet switch with two (2) (TX/RX) or more connections to another Ethernet switch, build 1/10G gigabit Ethernet channels/groups across two (2) or more gigabit Ethernet modules or stacks on each corresponding switch. For example, each port in the two (2) 10 GigE bundles should connect to a separate 10GigE module in the switch.
8. Define IP multicast group addresses to any Backhaul network electronics that utilize multicast communications, such as cameras. On the Core Ethernet Switches, Distribution Ethernet Switches, and Access Ethernet Switches enable multicast management functions, including multicast routing protocols and IGMP snooping.
9. When supported, the logical description configured for each physical or virtual port on network switches, routers and firewalls must described the device type and name and connection type to which it is connected (i.e. an access layer switch port with a UPS connection into the port has a description configured which states that the port is an access port connected to the Ethernet port #1 on a local UPS device and the UPS device name). Unused must be disabled after testing and the unused port described as “Not Used/Disabled”.
10. Apply physical configurations, port connections, assignments, settings and security in a consistent manner for each Hub location and at the data centers.

DocuSign Envelope ID: 894511EA-295B-49EB-A393-D26A6837FDD4

11. Disable all copper and fiber optic ports that do not have a device connected. BAIFA, or BAIFA's authorized representative, shall enable them as needed in the future. For installation testing, all Ethernet ports shall be enabled. When testing is complete, the non-used Ethernet ports must be disabled.

At each Corridor and data center Hub location:

12. Configure each Ethernet port on the Core or Distribution Ethernet Switch(es) with the correct VLAN and QoS information that is specific to what will be connected to the Ethernet port, all as indicated in the Drawings, and Supporting Documents of this contract. For example, in the Dublin Hub, the Distribution Ethernet Switches will have several Ethernet ports that are dedicated and connected to the ELN TSI network equipment. These ports would be configured to be in the ELN TSI VLAN (specific to each station) and with the correct QoS information applicable to the ELN TSI network traffic.
13. Configure each 10GigE Ethernet uplink port that is connected to a Hub Ethernet Switch to be an IEEE 802.1Q trunk. This is configured to trunk multiple VLANs from the directly connected Hub Ethernet Switch to Backhaul core, distribution and access managed Ethernet switches and non-Backhaul Ethernet Switches as indicated in logical design documents to be provided by BAIFA and the BAIFA approved FIDR submittals.
14. Each Core and Distribution Hub Ethernet Switch will have the appropriate number of fiber optic 10GigE connections to the adjacent Hub Ethernet Switch as indicated in the Drawings, the BAIFA approved FIDR submittals and supporting documents of this contract. Configure each Core and Distribution Hub Ethernet Switch 10GigE port that connects to the adjacent Hub Ethernet Switch. Each of these ports must also be configured with the correct IP addressing and configured to be a "trusted" QoS port.
15. Each port connected to an ELN TSI network switch must be configured with the correct VLAN and IP addressing and configured to be a "trusted" QoS port. Each port connected to a non-Backhaul network, such as an external ITS network will be configured with the correct IP address and VLAN and configured with the correct QoS parameters.
16. Configure and connect each of the network electronics console ports to the Out-of-Band Terminal Server.
17. Configure and connect the Out-of-Band Terminal Server Ethernet and console port to the Cellular modem provided by others.
18. Configure and connect the Out-of-Band Terminal Server console ports to the network devices as indicated in the Drawings.
19. Configure and connect the remote environment monitoring hardware and sensors to provide monitoring of environment as indicated herein.
20. Coordinate with the MetroE solution provider to ensure connectivity from Backhaul Hubs in the Corridor to the Data Centers.
21. Coordinate with wireless solution provider to ensure connectivity from the 375 Beale data center to each hub station's Out-Of-Band management terminal server.
22. Configure all other information relevant for correct operation as indicated in the Drawings, the BAIFA approved FIDR submittals and Supporting Documents of this contract.
23. At Hub locations that utilize partner agency fiber optic cable infrastructure:
    - Test and ensure 1/10GigE connectivity from partner agency demarcation point to designated Data Center Core switches, as appropriate

DocuSign Envelope ID: 894511EA-295B-49EB-A393-D26A6837FDD4

- Coordinate with BAIFA and partner agency to ensure connectivity of BAIFA-designated fiber optic strands to Backhaul network electronics and installation of hardware within the facility.

24. At Hub locations that utilize dark fiber optic infrastructure:
    - Coordinate with Dark Fiber solution provider to ensure connectivity of adjacent Backhaul Hubs. Provide fiber optic connections from Dark Fiber termination point to Backhaul network electronics.
25. Configure congestion management based on RFC 4594 guidelines and industry best practices, including the following parameters:
    - Configure and implement a consistent end-to-end QoS policy
    - Real-time Priority Queue should be less than 33% of link
    - Best-Effort Queue should be guaranteed at 25% of link
    - Scavenger/Bulk queue should be minimally provisioned
    - Enable congestion-avoidance on non-priority queues
    - Traffic shaping on WAN interfaces to not exceed sub-line rate ISP service levels
    - Do not enable dropping policies, i.e. WRED, on priority queue or scavenger queue
    - Do not enable WRED on network control traffic application class queue
    - Preserve traffic marking from ELN and perform congestion management based on ELN marking
    - You will work with BAIFA and TSI to further define, modify and tune congestion management configuration

86-14.03A(1)(ii) Authentication

1. Work with BATANET IT to implement a Read-Only Domain Controller (RODC) in the Beale Street Data Center Backhaul Network NMS environment.
2. Provide and configure a network authentication server for centralized RADIUS authentication to the BATAnet domain via the RODC. Configure all network equipment to utilize the centralized Authentication Server Software via RADIUS for login/password authentication and logging.
3. Configure the network equipment with two (2) layers of login security – limited access and privileged/configuration access. Utilize logins and passwords specified by BAIFA. The Authentication Server Software must be where the logins and passwords are authenticated via central server, not on each local device.
4. Configure all network equipment with a common secret password that resides on the local network equipment so that access to the device can occur even if the centralized Authentication Server Software is not reachable by the specific network device. The password must consist of at least eleven (11) characters, with a mix of numbers, lower- and upper-case letters, and special characters.
5. Configure SSH2 for secure communications and generated SSH keys using 2048 bit encryption or greater.
6. All login attempts must be logged to the Backhaul NMS syslog server.

86-14.03A(1)(iii) Integration

1. Configure all network devices and related software such as DNS in the Backhaul to comply with the indicated naming, IP addressing, VLAN, routing, VRF, and QoS scheme. Coordinate with BAIFA as needed to ensure interoperability between BATAnet, ELN, ECN and the Backhaul.

DocuSign Envelope ID: 894511EA-295B-49EB-A393-D26A6837FDD4

2. Configure Backhaul network virtual machine servers to supply network services such as DNS, SMTP forwarding and other network services specified under this Contract.
3. Configure Backhaul NMS for integration with existing BATAnet network management solution, active directory, RADIUS, Messaging and other network applications and protocols necessary. Coordinate with BAIFA to ensure interoperability, compatibility, security and functionality of Backhaul NMS while minimizing any downtime to BATAnet network resources.
4. Configure a single management platform to centrally manage the configuration, security policies, perform forensic analysis and generate reports across Backhaul Firewalls.
    - Work with BATAnet IT to integrate existing BATAnet firewalls
5. New systems shall not be connected to the existing BATAnet network infrastructure during regular business hours.
6. You will develop a detailed back-out plan for review and approval by BAIFA before connecting to the existing network infrastructure.

86-14.03A(1)(iv) Network Management

Complete all necessary tasks to support the complete implementation of the NMS, NMS host server(s), operating system(s), application(s) and database(s), including:

1. All Product Licensing and Registration; PKI, Secure Administration; Identification, creation and polling of Data sources; Data Synchronization; Creation of Scheduled Tasks; Creation and customization of Queries to implement discovery and ongoing network management; creation and nesting of directories, groups, and trees for population of applicable data; Creation of dashboards and customization of existing dashboards; integration into Active Directory for user/group role-based administration; and if supported, integration of NMS data into a central repository; Backup and Recovery of NMS system and data; configuration of Backhaul network to implement data collection and ongoing network management.
2. Backhaul network electronic hardware including Core, Distribution and Access network switches, firewall appliances, servers, storage arrays and ancillary hardware such as UPS must comprehensively detect all equipment failures, faults and exceeded thresholds and alert/report them to the NMS in the form of a minor, major, or critical alarm.
3. Coordinate with BAIFA to provide and tune notification via Email and SMS texts. Notifications must also be correctly configured to be reported to You during the network operations and maintenance period(s).
4. Coordinate with cellular service provider to ensure correct functioning of Out-of-Band (OOB) service connections for each Hub location.
5. Configure all network equipment with the correct SNMP community strings as specified by BAIFA.
6. Configure all network equipment with different SNMP Read and Read-Write strings as specified by BAIFA.
7. Securely configure and implement iLO interfaces for remote management.
8. Mount, connect, configure and if supported calibrate remote environmental monitoring appliance, sensors and application software to correctly monitor and transmit environmental conditions at each Hub location to the NMS, including the following:
    - Temperature
    - Humidity

DocuSign Envelope ID: 894511EA-295B-49EB-A393-D26A6837FDD4

- UPS Status
- HVAC Status
- Microphone
- Door switch/door ajar
- Remote Camera/CCTV viewing and motion detection

9. To ensure adequate network management capabilities, you will coordinate with BAIFA to ensure all Backhaul network elements are monitored correctly.
10. Configure NMS hardware and iSCSI implementation. Configure NMS virtual environment iSCSI protocol features and private IP addresses on iSCSI interfaces. Protect iSCSI interfaces from other network traffic sources.
11. Configure NMS environment for Microsoft Hyper-V virtualization, storage, high availability, and any other features necessary to comply with the requirements in this agreement and complete NMS hardware implementation.
12. Configure storage array to provide protection features such as RAID and snapshots.
13. Size, partition, configure and allocate local server and Storage Area Network (SAN) based storage, including virtual storage partitions as required by the array and server hardware, management application, virtualization software manufacturers and reference architecture provided by storage, application and virtualization vendors, for example configure array management partitions, virtualization partitions, virtual guest logical volumes, backup partitions, and snapshot partitions in accordance with manufacturer and vendor best practices.
14. Configure other features of the storage array, including data deduplication and compression. Configure the management interfaces of the storage array for centralized management and alerting to and from specific IP addresses to be supplied by BAIFA.
15. Configure virtualization host servers for N+1 cluster failover and load sharing. Provide and configure redundant connections to the Backhaul network core switch at 375 Beale.
16. Configure Backhaul server infrastructure including Active Directory server(s), DNS server(s), SMTP server(s), RADIUS server(s), Security server(s), Application server(s) and any other servers necessary to provide fully functional network management system.
17. Configure sampling of flow-based data such as NetFlow, JFlow or sFlow.
18. Configure NMS QoS monitoring to:
    - Provide pre and post policy traffic and traffic drops statistics
    - Provide per conversation and/or application validation of QoS Policy
    - Provide protocol and end point statistics
    - Collect QoS policy statistics via MIB query
    - Collect Class Based QoS data via MIB query
19. Install and configure network management client access application(s) on BATA IT designated workstations.
20. You will not remotely access or install remote access software to the Backhaul network outside of the BATA-maintained VPN.
21. You shall implement and configure the Backhaul NMS to:
    - Capture, modify, print and save and restore running configurations on all Backhaul network communications devices.
    - Provide functions to update and roll back firmware to all Backhaul network communications devices via TFTP and additionally, any of the following:
        - **i.** Secure File Transfer Protocol (SFTP)
        - **ii.** Secure Shell (SSHv2)

DocuSign Envelope ID: 894511EA-295B-49EB-A393-D26A6837FDD4

iii. Hypertext Transfer Protocol Secure (HTTPS)

- Provide centralized configuration management functions for the following:
  - **i.** Naming and detailed description data for managed objects.
  - **ii.** Track maintenance and work history
  - **iii.** Assignment and tracking of scheduled and manual maintenance
  - **iv.** Schedule automatic upgrade and update of software and firmware for Backhaul network, including network servers, network switches, routers, firewalls, management software and ancillary hardware such as UPS.
  - **v.** Manual upgrade and update of software and firmware for Backhaul network, including network servers, network switches, routers, firewalls, management software and ancillary hardware such as UPS.
  - **vi.** Software and firmware repository for Backhaul network, including network servers, network switches, routers, firewalls, management software and ancillary hardware such as UPS.

- Provide polling and validation of software and configuration for Backhaul network, including network servers, network switches, routers, and firewalls.
- Provide centralized auditing capability including the following:
  - **i.** Listing of all specified managed devices with model number, firmware and software loaded on each device with version number and patch number where appropriate.
  - **ii.** Real-time configuration change alerts for all Backhaul Hub network electronics.
  - **iii.** Log of all failures associated with a device or incident to include date and time, alarm severity, alarm name, alarm description, and alarm or issue resolution.
  - **iv.** Log of all user account access, NMS activity and changes to the NMS
  - **v.** Logging to default or user defined location and automatic archiving to remote location. Hardware and software necessary to support archiving store.
- Provide Discovery and Monitoring, including:
  - **i.** Network management and monitoring in-band wherever possible.
  - **ii.** Provide and configure all required licenses to support Backhaul network hardware and software. All licenses must be registered in BAIFA's name with BAIFA as the owner.
- Provide centralized Change Management functions including the following:
  - **i.** Installation, modification and tracking of network configuration parameters (hardware and software) to enable the continuous operation of services.
  - **ii.** Reconfiguration the equipment electronically and remotely. All interface models, interface ports and system controller options and settings shall be configurable, without using hardware option settings. A replaced

DocuSign Envelope ID: 894511EA-295B-49EB-A393-D26A6837FDD4

module shall have its options automatically downloaded from the database contained in the online memory.

iii. Contingency reconfiguration.

iv. Reporting of change-of-state of all communications equipment, where supported.

v. Network path and logical topology management with provisioning, modification and auditing capabilities

vi. Remote provisioning of communications equipment, facilities and cross-connects. The following service provisioning functions shall be available both locally and remotely:

a. Establishment/removal/rearrangement of connection

b. Placement of equipment into service

c. Removal of equipment from service

d. Software downloads capability of new generic releases to communications equipment, where applicable.

- Provide security monitoring and management. Configure controls to protect the network from unauthorized, incorrect or accidental use, modification or disclosure, including the following:

i. Backup and restore features to protect network switch/router/firewall configurations, network storage device configurations and BAIFA network management virtual environment critical server and Network Management console/workstation configurations. Configure backup and restore subsystem to comply with BAIFA provided Backup and restore policy.

ii. Control of network user access

iii. Logging and storage of all NMS user activity for convenient access

iv. Security violations alerts and reporting

v. Security log data aggregation, storage, analysis and reporting

vi. Real-time monitoring, correlation of events and notifications

vii. Security Dashboard views to support identification of patterns and activities that do not conform to expected network communications

viii. Limit access to the Backhaul network management interfaces and the NMS.

ix. Security vulnerability scanning and reporting.

a. Configure scheduled and manual vulnerability scans of the Backhaul network in accordance with security policies to be provided by BAIFA, including but not limited to: network switches, routers, firewalls, server and storage array hardware, operating systems, applications and databases deployed as part of the Backhaul system.

x. Configure NMS to provide an initial network and security baseline of the Backhaul. The baseline shall include:

a. Inventory of hardware assets

b. Inventory of software assets, including OS/Firmware version and patch levels

DocuSign Envelope ID: 894511EA-295B-49EB-A393-D26A6837FDD4

c. Inventory of virtual assets (i.e. virtual machines)
d. Inventory of network device configurations
e. Inventory of individual accounts with access to Backhaul network electronics and NMS
    i. Privileges for each account
    ii. Group memberships for each account
f. Performance parameters of each hardware asset during a 30-minute polling interval, including:
    i. CPU utilization
    ii. Memory Utilization
    iii. Storage Utilization
    iv. Average and peak network port utilization
g. Network performance for each network segment during a 30 minute polling interval, including:
    i. Average and peak bandwidth utilization
    ii. Throughput (transfer speed)
    iii. Latency, jitter and error rate
    iv. Buffer utilization
    v. Routing and routed protocol utilization, drops and errors
    vi. Flow analysis for devices that support Netflow or similar
    vii. End-to-end packet timing, route and path cost analysis from each roadside hub and D4 TMC locations to the Benicia and 375 Beale data centers; and between both data centers

xi. Configure NMS to provide periodic analysis of Backhaul to record and compare changes to the existing baseline and provide a new baseline.

xii. Provide recommendations to BAIFA for NMS monitoring thresholds based on baseline results and best practices. BAIFA shall review all threshold recommendations for approval prior to configuration into the NMS by You.

i. Provide centralized performance management functions for the following:

i. Collection of network traffic statistics
ii. Network alarms, performance and health status to NMS
iii. Historical files of alarms, commands messages and operator actions
iv. Message log retrieval for past events analysis
v. Event logging via syslog facilities
vi. Monitoring and polling of Backhaul network managed objects
vii. Real-time traps and alerting
viii. Incident notification via email, SMS and NMS administration GUI
ix. Root cause analysis
x. Generation of graphical data to support performance trend analysis
    a. Monitor and report change-of-state of all communications equipment, where supported by communications equipment.

j. Provide Fault Management capabilities for the detection, isolation and correction of abnormal network conditions, and include the monitoring of automatic/manual diagnostics

DocuSign Envelope ID: 894511EA-295B-49EB-A393-D26A6837FDD4

k. Provide centralized Fault Management functions for the following:
   - **i.** Work-flow based escalation of incidents reported to the NMS
   - **ii.** Incident classification
   - **iii.** Incident and event correlation
   - **iv.** Configurable thresholds
   - **v.** Alert Notification via email, SMS and NMS administration GUI

l. Provide failure and maintenance recording with trend tracking and predictive failure analysis capability

m. Provide compiled status and alarm data from the various registers into summary reports for recall and demand. Work with BAIFA to configure up to 15 default reports and 5 custom reports based on the criteria described in **86-14.02I Network Management (Reporting).**

n. Provide secure storage of Backhaul network logging data in accordance with Data storage and retention policy to be provided by Agency. Proposed cryptographic encryption must be reviewed and approved by BAIFA prior to implementation.

o. Provide centralized Reporting functions for the following:
   - **i.** Track and report BAIFA policy compliance
   - **ii.** Schedule reports to be automatically generated, and optionally, emailed to staff
   - **iii.** Manual and scheduled archiving.
   - **iv.** Summarization and filtering of data
   - **v.** Restricted role-based access to operational and reporting data.
   - **vi.** Work with BATA IT and BAIFA to define and configure role-based access groups.

22. Provide and configure any other NMS functionality and features listed in section **86-14.02 Network Management.** You will work with BAIFA to ensure functionality and features are configured correctly.

86-14.03A(1)(v) Network Security

1. Configure and implement Backhaul network and system hardware and software in accordance with Agency provided BAIFA Backhaul Network security policies.
2. Configure all Backhaul network equipment in accordance with Agency provided BAIFA Minimum Security Standard for Networking Devices.
3. Configure auditing and access control of network user access to ensure compliance with BAIFA security policies. Use of local accounts is not allowed unless approved by BAIFA.
4. Configure SNMP-capable hardware and software for SNMP version 3 or highest version supported.
5. Configure all network equipment to allow SNMP connections only from the specific IP address(es) which correlate to BAIFA's management system.
6. You will disable telnet and enable SSHv2, when supported.
7. You will disable all unused network ports.
8. Disable all unnecessary network services on the network equipment including, but not limited to rlogin, http, and ftp.
9. Configure routing protocol authentication to ensure security of routing exchanges.

DocuSign Envelope ID: 894511EA-295B-49EB-A393-D26A6837FDD4

10. Configure a DMZ not connected to the Internet for external agency access to Backhaul network services, such as for access to Backhaul network management reports.
11. Configure an extranet DMZ not connected to the Internet for internal agency and external agency stakeholder access to Backhaul network services in the DMZ, such as for access to Backhaul network management reports.
12. Network IPS/IDS rules and implementation must be configured and tuned to correctly protect the Backhaul management network VLAN and interfaces and must not interfere with ELN traffic. Manual testing, tuning and updates of the IDS/IPS must also be performed during operations and maintenance period for Segment I and Segment II.
13. Backhaul network firmware and software patches and updates must be configured for automatic download to a central repository server, when supported by hardware vendor and the Backhaul NMS. All hardware and software must be configured for manual updates. You must monitor vendor communications and announcements for security and software updates and notify BAIFA in accordance with SLA performance provisions in the agreement. You must perform risk analysis and testing and provide a report including the results of testing and a back out plan to BAIFA for review and approval prior to updates to the Backhaul network hardware and software.

86-14.03A(1)(vi) Network Server Security

1. Install server software on a dedicated host or on a dedicated guest OS if the server is virtualized.
2. Patch and upgrade the server operating system and applications to correct for known vulnerabilities. Document any patches or upgrades that have not been applied and the constrained software/manufacturer. BAIFA shall review any unpatched software prior to approval.
3. Remove or disable unnecessary services, applications and network protocols.
4. Remove or disable all unneeded default user accounts created during the server installation.
5. Remove all manufacturer documentation, example and test files, scripts, executable code, and unneeded compilers from the server.
6. Configure operating system user authentication.
7. Configure resource controls such as limiting drive space for applications and maximum network connections allowed by the server.
8. Separately partition server operating system file space, application file space and log file space; ensure file spaces are sized appropriately
9. Apply an appropriate security template or hardening script to the server. A fully licensed and executable copy of the security template or hardening script shall be supplied on CD to BAIFA for server recovery and rebuild.
10. Configure each network service to listen for client connections on only the necessary TCP and UDP ports, if possible. When supported by the operating system or software application, limit the number of dynamic port allocations.
11. Install McAfee Server Host-based firewall and antivirus service on each server host or guest OS if virtualization is used. You must work with BAIFA to integrate Backhaul McAfee software to existing BATAnet ePolicy Orchestrator (ePO) server.
12. Configure server Host and Guest OS logging to NMS system.
13. Configure high availability features to ensure failover resiliency of the Backhaul NMS.
14. Configure an extranet DMZ for BAIFA stakeholder access to the Backhaul NMS report server.

DocuSign Envelope ID: 894511EA-295B-49EB-A393-D26A6837FDD4

15. Configure all protocols and services necessary to ensure correct and complete functionality of the Backhaul NMS.

86-14.03A(1)(vii) Integrity and Compatibility

1. Network electronic hardware, including managed switches and firewalls connecting local and remote sources must be monitored and alarmed at BAIFA Operations Management at the 375 Beale Data Center by the Network Management System (NMS).
2. Any proposed use of proprietary network protocols and services is subject to review and approval by BAIFA. All Contractor supplied network hardware must provide interoperability and compatibility between shared features. For example, switching and routing protocols implemented at shared links between Hubs sites must be compatible and interoperable. Physical and logical connections to non-Backhaul networks, such as the ELN must be non-proprietary and based on open standards.
3. All network electronic hardware must have a proven successful history within a 24/7 high transaction volume environment and must be compatible with the Cisco Validated Design architecture or approved equal. You must submit a list of three (3) sites and contact information for verification as part of the response bid package.
4. More than two (2) Repair Events of network hardware, including subcomponents, from the time the network hardware is placed in service until the end of the Warranty Period shall be cause for the complete replacement of the network hardware and all installed subcomponents.
5. It must be possible to replace a Backhaul network switch without impacting more than the devices connected to the same replaced switch.

86-14.03A(1)(viii) Backup and Restoration

1. All Backhaul network electronics, server, database and storage software must be fully backed up on a daily basis using a regular and hierarchical backup scheme such as Grandfather/Father/Son. Backup must utilize full backup modes only. Configure the Storage array to use snapshot based backups on a regular basis. You will provide a detailed backup scheme which accounts for tiered local storage and offsite tape rotation for BAIFA review and approval.
2. Software used for backup and restoration must be configured to alert network administrators of job status, including whether the backup or restoration was successful or unsuccessful. Failed jobs shall include detailed job information including date and time, the job name and description, the generated error message, data that failed to backup or restore, number of retries (if configured) and target device(s).
3. Restoration files or images must be submitted for each network device, such as switches, routers, firewalls, servers and storage arrays such that replacement hardware can be configured as an exact replacement. You will test each set of restoration files or images on Backhaul electronic hardware and the Backhaul NMS system as part of the qualifying and certification testing plan to validate an accurate restoration. Test results must be submitted to BAIFA for review and acceptance.
4. Configure the tape library for automatic Backups and tape rotations.
5. Configure tiered storage for disk-to-disk and disk-to-tape backups.
6. Configure backup scripts to fully backup data from target nodes to tiered storage, including but not limited to:

DocuSign Envelope ID: 894511EA-295B-49EB-A393-D26A6837FDD4

- System State of Windows-Based machines,
- Network electronics configuration files,
- System files & application data partitions,
- Database servers, instances, log files and transaction logs,
- Event logs, syslogs, and other log files.

7. Document restoration, rollback, controlled shutdown and startup procedures for all Backhaul hubs and the NMS system.
8. It must be possible to replace network and system hardware with network and system hardware of equal or greater capacity from the same manufacturer or of the same type without change to any software.
9. You will coordinate with BAIFA to configure backup and restoration software parameters.

86-14.03B Segment II

86-14.03B(1) Installation, Configuration, Integration and Testing

86-14.03B(1)(i) General

Contractor shall be responsible for:

1. All network electronics and software installation Work necessary to complete the indicated network, except as specified or indicated otherwise.
2. All Work must be done in a neat and professional manner, in accordance with all applicable standards and practices.
3. All installation and testing must be performed by qualified network technicians with a minimum of five (5) years of experience in the installation and testing of similar equipment.
4. All equipment must be installed, configured and tested in strict accordance with the original manufacturer's instructions.
5. All equipment must be placed into operation in accordance with specified function.
6. Install equipment in the locations specified or indicated.
7. All equipment chassis must be solidly grounded in accordance with NEC.
8. Install and wire all equipment in accordance with the Drawings. Any variations shall be noted on the site copy of contract Drawings and indicated on the as-builts.
9. All network electronics and software must be free of all known security vulnerabilities, worms and viruses at the time when testing begins.
10. You will submit detailed configuration, implementation and backout plans for approval by BAIFA before Work begins.
11. A Sequence of Work must be developed and provided to BAIFA for approval before Work begins, assuming the following priorities for BAIFA in order of importance:
    - Distribution I-880 Hub and corridor connectivity (see plans for locations of communications Hubs):
        - **i.** AutoMall Hub
        - ii. Fiber Optic cross-connection at City of Fremont Traffic Operations Center (39550 Liberty Street, Fremont CA)
        - **iii.** BAIFA Oakland Hub (BOH) to AutoMall Hub fiber optic cable connection and cross-over
        - **iv.** Hegenberger Hub
        - **v.** I-80 East Hub
        - **vi.** I-80 West Hub

DocuSign Envelope ID: 894511EA-295B-49EB-A393-D26A6837FDD4

- Distribution I-880 Network configuration and integration into Backhaul NMS
- Distribution I-880 Network Interface and routing for ELN Network Data Traffic
- Distribution I-880 Network Interface and routing for ECN and ITS Data Traffic
- Distribution I-80 Hub connectivity (I-80 East and I-80 West)
- Distribution I-80 Network configuration and integration into Backhaul NMS
- Distribution I-80 Network Interface and routing for ELN Network Data Traffic
- Distribution I-80 Network Interface and routing for ECN and ITS Data Traffic

12. Contractor shall follow the work criteria set forth in **86-14.03A Segment I,** to complete the installation, configuration, integration and testing of the Segment II Backhaul hubs into the Segment I Backhaul network and Backhaul NMS.

86-15 NETWORK MAINTENANCE REQUIREMENTS

86-15.01 Vendor Maintenance Contracts

Contractor shall provide one (1) year of vendor maintenance on network elements as defined below.

For all network electronics, provide a vendor maintenance contract that provides:

1. Unlimited software updates through the vendor's website and compact disc #(CD).
2. Unlimited 24-hour telephone and email support.
3. 24 hours a day, 7 days a week 4-hour (24x7x4) Hardware replacement with on-site replacement support.

For all network management server hardware and peripherals, provide a vendor maintenance contract that provides:

1. Unlimited software updates through the vendor's website and CD.
2. Unlimited 24-hour telephone and email support.
3. 24 hours a day, 7 days a week 4-hour (24x7x4) Hardware replacement with on-site replacement support.

For all computer software, provide a vendor maintenance contract that provides:

1. Unlimited software updates through the vendor's website.
2. 8-hour (9 a.m. to 5 p.m.) Monday through Friday telephone and email support.

During the maintenance period, provide BAIFA with 100 hours of 24-hour, 7-day a week onsite labor and support by manufacturer/vendor-certified personnel with 2-hour response, including routine maintenance, such as port adds/deletes/changes.

Provide BAIFA with one (1) year of 24-hour, 7-day a week remote security incident handling, including monitoring, reporting, analysis and response and support by vendor-certified personnel, including quarterly non-intrusive vulnerability scanning and prioritized exploit remediation.

DocuSign Envelope ID: 894511EA-295B-49EB-A393-D26A6837FDD4

The one year of maintenance coverage for each network element shall begin no sooner than the date of BAIFA's acceptance of the work comprising such network element.

All network electronics and software licenses and maintenance contracts shall be created in BAIFA's name and transferred to BAIFA during installation. BAIFA shall be given a document listing all contact information to identify who to contact in the event of a failure or who to contact if they choose to modify their maintenance contract.

86-15.02 Operations and Maintenance Support Service Level Requirements

86-15.02A General

BAIFA's Backhaul network is integral to the effective operation of the Express Lanes Network (ELN) tolling infrastructure. The Backhaul network provides a network communications backbone which allows high-speed transmission of toll system data to/from data centers and roadside field devices. BATA desires to utilize the Contractor to augment its network operations and maintenance of the Backhaul network during the maintenance period of each phase of the Backhaul network to ensure a highly available and responsive Backhaul network. Accordingly, the reliability, responsiveness and recoverability of the network during the warranty period are of critical concern.

86-15.02B Operations and Maintenance Service Level

Service levels during the operations and maintenance (O&M) period for post-acceptance services including installation, configuration, integration and cut-over, roll-backs, incident management, fault management, performance management, change management, configuration management and security management, and maintenance must meet the criteria specified in the **Service Level Response and Repair Compliance Table in 86-15.02C** below. Failure to provide these services in a timely manner will result in an assessment of Penalties.

Incidents and events for the purpose of this service level agreement represent one or more occurrences of significance or interest on a (managed) target in the Backhaul network environment. Examples of incidents or events may include policy compliance violation (i.e. login as "administrator", detect use of unauthorized protocols), availability alerts (i.e. specific service on target is down, target is down, network gateway unreachable), metric alerts (i.e. high CPU utilization, high network latency), or job events (i.e. Backup failed, service failed to start). Requests for new or additional service and requests for information are included in the definition of an incident and included in the scope of the O&M service level. Unless otherwise stated, the Contractor must respond to Incidents and Events outside the normal operating parameters of the Backhaul network, hereto referred to as "trouble" and repair such problems, in accordance with the service level performance requirements specified in this agreement. BAIFA reserves the right to designate resources including locations, assets, services, authorized staff, departments or stakeholder agencies as "critical", "priority", "non-priority" and "low-impact" as defined in section **86-15.02C O&M Service Level Definitions** and shall give ten (10) working days notice to the Contractor of such designations which will be considered binding. Resources not designated by BAIFA shall be considered "low-impact" for the purposes of the **Service Level Response and Repair Compliance Table in 86-15.02C** below.

DocuSign Envelope ID: 894511EA-295B-49EB-A393-D26A6837FDD4

The Contractor is responsible to respond to Backhaul network trouble and to repair the Backhaul network regardless of whether the Contractor is or is not responsible for casing the fault incident or event. The response and repair times in the **Service Level Response and Repair Compliance Table in 86-15.02C** below shall be performed as specified without regard to time of day or day of week (including holidays). If a single incident or event results in multiple response and repair times, or if multiple incidents or events result in multiple response and repair times, the times shall not be added cumulatively (cumulative time). For the purpose of the Operations and Maintenance Support Service Level requirements, cumulative time is defined as extending the response and repair time of one or more separately generated trouble tickets by combining multiple separately generated incidents or events. The repair time shall include the time taken to respond to a single incident or event.

86-15.02C Operations and Maintenance Service Level Definitions

"Response time" is defined as follows:

The time between receipt of notification and the time the Contractor begins working on a resolution. The response time begins immediately when an authorized BAIFA representative contacts the Contractor about Backhaul network trouble; when the Contractor is notified of Backhaul network trouble through the Backhaul network management system; or when the Contractor becomes aware of a Backhaul network trouble through other means. The response time concludes when the Contractor has acknowledged the notification by phone or email AND a technician has been dispatched to resolve the trouble. Automatic generation of a trouble ticket or acknowledgment of an incident or event ONLY will not be considered a "response".

"Repair time" is defined as follows:

The time between response time and when the trouble has been cleared and a BAIFA authorized representative confirms restoration. For the purposes of the agreement, the terms "restoration" and "repair" are synonymous.

The Contractor is required to meet or exceed the service levels defined in the **Service Level Response and Repair Compliance** table below.

Service Level Impacts are defined as follows:

Critical: The unauthorized access, modification or disruption to the Backhaul network resulting in a severe impact to the ELN, Backhaul critical functions, BAIFA/BATA/MTC workforce, stakeholders and/or its customers and to which there is no workaround. For example: a complete loss of network services to the primary ELN data center(s) even after a restore of device configuration from backup and a restart of Backhaul network electronics has been performed.

Priority: The unauthorized access, modification or disruption to the Backhaul network resulting in a partial or limited loss of essential services to the ELN, Backhaul critical functions, BAIFA/BATA/MTC workforce, stakeholders and/or its customers but a workaround exists to allowed continuity of essential network services and operations. For example: Backhaul services are disrupted by a conduit/fiber break but a workaround exists allowing for continuity of essential services (i.e. ELN data is still routed to the primary and secondary data centers).

DocuSign Envelope ID: 894511EA-295B-49EB-A393-D26A6837FDD4

Non-Priority: The unauthorized access, modification or disruption to the Backhaul network resulting limited or partial loss to non-critical/non-essential services to the ELN, BAIFA/BATA/MTC workforce, stakeholders and/or its customers but a workaround exists to allowed continuity of normal network services and operations.

Low-Impact: Incident or event does not result in loss of network functionality, quality or performance of the Backhaul network or is a general usage question. Software updates from the mfr/vendor addressing a critical incident or event. Software Updates from the manufacturer/vendor not directly addressing a critical incident or event.

Opening of Tickets

At a minimum, BAIFA shall be able to open O&M tickets with the Contactor through the following means or channels:

Email from BAIFA/BATA authorized staff
Access to a Contractor secure internet portal with web-based GUI
Telephone call to technical support/helpdesk support center
Notification to Contractor Network Operations Center from Backhaul NMS

Closure of Tickets

Service Tickets shall be considered closed when BAIFA or its authorized representative receives fix, workaround or information that resolves the incident or event and agrees that the incident or event has been resolved. Ticket will also be closed 10 business days after the final e-mail message has been sent to BAIFA or its authorized representative. Records of tickets must include the information listed under "Service Ticket Information" below and be presented to BAIFA within 24 hours upon written request for compliance review.

Service Ticket Information

Service tickets must, at a minimum, contain the following information:

1. Service ticket tracking identification code
2. Requester name and contact information
3. Customer Support Representative (CSR) who logged the request, including contact information
4. Technician assign to the request, including contact information
5. Type of incident or event
6. Initial and Final Impact Levels. If the initial and final impact levels are different, also include the BAIFA authorized representative that approved the service level impact change
7. Incident Summary, including all affected Backhaul resources
8. Incident Details, including any notifications from BAIFA
9. Root cause
10. Time incident initially received
11. Start time of response

DocuSign Envelope ID: 894511EA-295B-49EB-A393-D26A6837FDD4

12. Time to repair
13. Steps taken to fix problem or apply work around; if a work around is applied, time to permanently fix the problem
14. Total Duration of incident (including duration of workaround and duration of permanent fix)
15. Sub-tasks/sub-tickets opened as part of the work performed under the ticket; include task/ticket details
16. Remote Login authorization details, if access was requested.
17. Status field specifying if the ticket is open, closed or on hold.
18. Any follow-up information requested by BAIFA.

Service Level Response and Repair Compliance Table

Type Of Incident or Event	Response Time	Repair Time
Critical	30 Minutes Maximum Response time	Fix or suitable work around within 3 hours Permanently correct within 10 days.
Priority	2 Hrs Maximum Response time	Fix or suitable work around within 6 hours Permanently correct within 15 days.
Non-Priority	12 Hrs Maximum Response time	Fix or suitable work around within 48 hours Permanently correct within 20 days.
Low-Impact	72 Hrs Maximum Response time	Fix or suitable work around within 10 Working days
Low-Impact - Critical Software/Firmware Updates	10 Working Days Maximum Response time	Risk analysis and back out plan submitted to BAIFA within 10 Days. Once approved, apply update within 24 Hours.
Low-Impact - Non-Critical Software/Firmware Updates	10 Working Days Maximum Response time	Risk analysis and back out plan submitted to BAIFA within 30 Days. Once approved, apply update within 24 Hours.

DocuSign Envelope ID: 894511EA-295B-49EB-A393-D26A6837FDD4

86-15.03 General Repair Work Requirements

The Backhaul Contractor must agree to the following additional conditions:

The Backhaul Contractor's Customer Service Representative or Technician will remain in constant communications with an authorized BAIFA representative while any service testing is performed on the Backhaul network.

Any required testing must be identified as part of each incident or event response and if approved by BAIFA, completed within 30 minutes of receipt of BAIFA approval. Records of such testing, including start, duration and completion times must be provided upon request by BAIFA.

For affected Backhaul network services not repaired via remote access, Contractor must have a qualified technician, as defined in **86-17, Key Staff Qualifications**, equipped for the applicable Backhaul service, onsite within two (2) hours of the response time.

Contractor must provide BAIFA authorized staff a secure remotely accessible internet portal with a web-based graphical user interface including the ability to create, review and update service tickets, retrieve service ticket status information and a searchable knowledge-base database for the network products and services installed under this contract.

Contractor must continuously monitor the status of the Backhaul network as part of the Contractor's operations and maintenance plan. Contractor must provide a secure means without additional cost or materials to BAIFA, such as an encrypted IPSEC or SSL VPN tunnel to monitor the status of the Backhaul network. The secure connection will allow communications only between the Contractor's business network designed specifically for network operations, such as a network operations center (NOC) and the Backhaul NMS system. Only protocols necessary to provide monitoring and remote login to NMS servers will be allowed. Under no circumstances will connections be allowed from a personal "home" network or open, unsecured locations such as a "café network". Each remote login to the NMS server environment must be authorized as part of the work flow of a trouble ticket and on a case-by-case basis.

86-15.04 Maintenance Manager

Contractor shall provide a maintenance manager who is responsible for the ongoing maintenance of the entire Backhaul communications network to meet functional and performance requirements. The Maintenance Manager manages and ensures Contractor meets service level requirements.

The Maintenance Manager shall have the qualifications set forth in **86-17, Key Staff Qualifications**.

86-16 COMMUNICATIONS TRANSMISSION SYSTEM

86-16.01 General:

All network devices installed as part of this effort shall, at a minimum, comply with and be configured for the following:

1. Simple Network Management Protocol version 3 (SNMPv3)

DocuSign Envelope ID: 894511EA-295B-49EB-A393-D26A6837FDD4

2. Network Time Protocol (NTP) or Simple Network Time Protocol (SNTP)
3. Support of remove and local setup and management via console port, secure shell (SSH) and secure Web-based GUI
4. Centralized Authorization Authentication Accounting (AAA) for user authentication, including RADIUS remote access services
5. For Ethernet switches: Port mirroring for troubleshooting purposes when combined with a network analyzer
6. All network switches must be commercially available from a single manufacturer. You will standardize upon a single switch manufacturer
7. Virtual host servers must be identical.

86-16.01A Acceptable Manufacturers/Models:

Network Management Virtual Server:
Hewlett Packard (HP)
Or approved equal (qualifying materials must be approved in writing by the Engineer prior to starting work)
Network Management Virtual Storage Array:
Hewlett Packard (HP)
Or approved equal (qualifying materials must be approved in writing by the Engineer prior to starting work)
Network Core Switch:
Cisco Catalyst 6880-X
Or approved equal (qualifying materials must be approved in writing by the Engineer prior to starting work)
Network Distribution Switch:
Cisco Catalyst 4500-X
Or approved equal (qualifying materials must be approved in writing by the Engineer prior to starting work)
Network Firewall Appliance:
Palo Alto Networks (PA-5000 Series)
Or approved equal (qualifying materials must be approved in writing by the Engineer prior to starting work)

86-16.01B Core Ethernet Switch

86-16.01B(1) General

Provide the function of a Layer 2 (L2) Ethernet switch and Layer 3 (L3) router with advanced QoS and L2/L3 network virtualization capabilities.
Provide processor, switching, and power redundancies.

86-16.01B(2) Chassis

Maximum of 6 EIA rack-units (RU) high
Modular/slot/card design with minimum of 4 total blades/port card slots
Minimum port density of 80 x 1G/10G ports, per switch; or 158 1G/10G ports in a VSS pair.
After all modules are installed for the initial requirements, have a minimum of two (2) available and unassigned slots for future expansion
All power supplies, fan modules, and I/O modules should be field replaceable and hot-swappable
Provide redundant power supplies for all backhaul core switches

86-16.01B(3) Router/Switch Processor/Supervisor:

If chassis supports modular supervisor slot:

- Supervisor switching capacity or 2 Tbps or higher

DocuSign Envelope ID: 894511EA-295B-49EB-A393-D26A6837FDD4

- Synchronized dual processor/supervisor cards shall provide resilient, self-healing network architecture. If a processor/supervisor fails, high-availability switchover shall transfer switch control to the redundant processor/supervisor within three (3) seconds.

If chassis does NOT support modular supervisor slot:

- Provide high availability (HA) through stacking, Virtual Switching System (VSS) or BAIFA approved equal. A minimum of two switches must be provided for each Core Switch location. A minimum of 2 Virtual Switch Links (VSLs) are required for each VSS.

Processor card shall provide a minimum of one management interface for out-of-band management
Management console port for local PC connections and configuration
Support full Multi-Protocol Label Switching (MPLS), Virtual Private LAN Service (VPLS), Virtual Routing and Switching (VRF), Dynamic Host Configuration Protocol (DHCP), Domain Name System (DNS), Virtual Private Networks (VPN) and dynamic VLAN services.

86-16.01B(4) 10 Gigabit (10G) Ethernet Module

Minimum of sixteen (16) 10G ports per module and a minimum of two (2) modules in the chassis for the initial installation
Ports that support either 10GBase-ZR, 10GBase-LR, or 10GBase-ER SFP+ optics and backwards compatible with 1G SFP GBICs.

86-16.01B(5) Features

Layer 3 EtherChannel/link aggregation of physical 1GigE or 10GigE Ethernet ports
Support a minimum of thirty-two (32) link aggregation bundles with a minimum of four (4) physical ports per bundle
1GigE or 10GigE Ethernet bundling across multiple modules
Spanning-Tree Protocol support, including Rapid Spanning Tree Protocol (RSTP) and Multiple Spanning Tree Protocol (MSTP)
Support multiple Spanning Tree groups and a separate instance of Spanning Tree per VLAN
VLAN trunk creation supported from any port using IEEE 802.1Q trunking
VLAN trunk “pruning” support
Wire-rate IP unicast and IP-multicast routing support for Layer 3 dynamic routing services including Open Shortest Path First (OSPF) and Border Gateway Protocol (BGP)/Multiprotocol BGP (MP-BGP)
Support for routing level redundancy (HSRP/VRRP)
Distribution of routing traffic among multiple paths (ECMP)
Support for Layer 3 dynamic multicast routing support including Protocol Independent Multicast (PIM) Sparse mode (PIM-SM), Dense mode (PIM-DM), and Source Specific Multicast (PIM-SSM)
Support for MPLS, including Label Distribution Protocol (LDP), MPLS VPN, and VRF Lite
Software upgrade capability that allows for transparent upgrades

86-16.01B(6) Quality of Service

IEEE 802.1p support on all ports
Differentiated Services (DiffServ) support on all ports
Minimum of eight (8) network traffic queues for classification and queuing of network traffic
Able to differentiate network traffic based on port, source, destination, VLAN, pre-marked traffic
Support for “trusting” of QoS marking on ports

DocuSign Envelope ID: 894511EA-295B-49EB-A393-D26A6837FDD4

Ability to cross map and mark traffic based on medium or layer (DiffServ, IEEE 802.1p)

86-16.01B(7) Security

Multilevel access security
Media access control (MAC) address-based port level security
Access control lists (ACLs)
Remote Access Dial-In User Service (RADIUS) for user authentication, authorization, and accounting

86-16.01B(8) Management

Simple Network Management Protocol version 3 (SNMPv3), Remote Monitoring (RMON) or Switch Monitoring (SMON), Trivial File Transfer Protocol (TFTP), Secure Shell (SSH) version 2 or higher
Netflow version 8 or higher or BAIFA approved equivalent
Network Time Protocol (NTP) for an accurate and consistent time stamp

86-16.01B(9) Alarms

SNMP trap generation and forwarding to network management system.
Multifunction LEDs per port for port status, half-duplex/ full-duplex indication, switch-level status LEDs for system, redundant power supply (RPS), and bandwidth utilization.

86-16.01B(10) Environmental

Operating temperature: 0° to 40° Celsius
Operating relative humidity: 85% non-condensing
The field strength of radiated emissions shall meet the requirements of ANSI Z136.1 and Z136.2 (Class 1 device).
Complies with NEBS 4 in the following:
Earthquake environment and criteria;
Transportation vibration and criteria.

86-16.01B(11) Power Supply

AC input voltage/frequency: 100 to 240 VAC (autoranging) 47 to 63 Hz.
Redundant load-sharing power supplies
Rated so that one power supply can supply power to the router/switch if fully populated with modules in every slot

86-16.01B(12) Miscellaneous

The Contractor shall:
Make the necessary electrical power connections from the network equipment to the UPS or appropriate electrical outlet provided by others.
Provide horizontal and vertical slotted duct cable management (with removable covers) compatible with the accommodating rack (EIA 19-inch rack furnished by others)
Provide all of the necessary cables, kits, and miscellaneous hardware for complete installation

86-16.01C Distribution Ethernet Switch

86-16.01C(1) General

Provide the function of a Layer 2 (L2) Ethernet switch and Layer 3 (L3) router with advanced QoS and L2/L3 network virtualization capabilities
Provide redundant, hot swappable power supplies and fans.
Provide high availability (HA) through stacking, Virtual Switching System (VSS) or BAIFA approved equal. A minimum of two switches must be provided for each Distribution Switch location. A minimum of 2 Virtual Switch Links (VSLs) are required for each VSS.

DocuSign Envelope ID: 894511EA-295B-49EB-A393-D26A6837FDD4

86-16.01C(2) Chassis

Maximum of 1 EIA rack-units (RU) high per switch
Small form factor, low power design
All power, fan, and optic modules should be hot-swappable
Minimum Mean Time Between Failure (MTBF of 199,720 hrs)

86-16.01C(3) Performance

Management console port for local PC connections and configuration
Switching capacity 800 Gbps, with up to 1.6 Tbps in a VSS.
Support Virtual Switching System (VSS) or stacking or BAIFA approved equal High Availability (HA) feature
Minimum 16 SFP+ 10 Gigabit Ethernet Port switch with optional expansion slot for up to 8 additional 10 Gigabit Ethernet ports.
Provide backwards compatibility with 1 Gbps SFP GBICs
Auto-detect 10G and 1G Ethernet ports
Front-to-Back Airflow
Wire-rate IP unicast and IP-multicast routing support
Support Dynamic Host Configuration Protocol (DHCP), Domain Name System (DNS), Virtual Private Networks (VPN) and dynamic VLAN services
Support a minimum of 64 virtual routing and forwarding (VRF) tables, and 32 Easy Virtual Networks (EVNs).

86-16.01C(4) Features

Spanning-Tree Protocol support, including Rapid Spanning Tree Protocol (RSTP) and Multiple Spanning Tree Protocol (MSTP)
Support multiple Spanning Tree groups and a separate instance of Spanning Tree per VLAN
VLAN trunk creation supported from any port using IEEE 802.1Q trunking
VLAN trunk "pruning" support
Wire-rate IP unicast and IP-multicast routing support for Layer 3 dynamic routing services including Open Shortest Path First (OSPF)
Support for routing level redundancy (HSRP/VRRP)
Distribution of routing traffic among multiple paths (ECMP)
Support for Layer 3 dynamic multicast routing support including Protocol Independent Multicast (PIM) Sparse mode (PIM-SM), Dense mode (PIM-DM), and Source Specific Multicast (PIM-SSM)
Network virtualization through multi-VRF technology for Layer 3 segmentation, or approved equivalent.

86-16.01C(5) Quality of Service

IEEE 802.1p support on all ports
Differentiated Services (DiffServ) support on all ports
Minimum of eight (8) network traffic queues for classification and queuing of network traffic
Able to differentiate network traffic based on port, source, destination, VLAN, pre-marked traffic

86-16.01C(6) Security

Multilevel access security
Media access control (MAC) address-based port level security
Access control lists (ACLs)
Remote Access Dial-In User Service (RADIUS) for user authentication, authorization, and accounting

DocuSign Envelope ID: 894511EA-295B-49EB-A393-D26A6837FDD4

86-16.01C(7) Management

Simple Network Management Protocol (SNMP), Remote Monitoring (RMON) or Switch Monitoring (SMON), Trivial File Transfer Protocol (TFTP), Secure Shell (SSH) version 2 or higher
Netflow version 8 or higher or BAIFA approved equivalent
Network Time Protocol (NTP) for an accurate and consistent time stamp

86-16.01C(8) Alarms

SNMP trap generation and forwarding to network management system.
Multifunction LEDs per port for port status, half-duplex/ full-duplex indication, switch-level status LEDs for system, redundant power supply (RPS), and bandwidth utilization.

86-16.01C(9) Environmental

Operating temperature: 0° to 40° Celsius
Operating relative humidity: 90% non-condensing

86-16.01C(10) Power Supply

AC input voltage/frequency: 100 to 240 VAC, 50 to 60 Hz.
Redundant load-sharing power supplies
Rated so that one power supply can supply power to the switch if fully populated with 10G optics in every port

86-3.05D Access Ethernet Switch

86-16.01D(1) General

Provide the functions of a Layer 2 Ethernet switch
Provide redundant power supplies

86-16.01D(2) Chassis

Maximum of 1 EIA rack-units (RU) high per switch
All modules should be hot-swappable
Stacking capability through EtherChannel or similar technology

86-16.01D(3) Performance

Management console port for local PC connections and configuration
Minimum twenty-four (24) ports 10/100/1000Base-T Ethernet ports
Minimum two (2) SFP+ uplink ports with 1G/10G compatibility
SFP+ ports support either 10GBase-ZR, 10GBase-LR, or 10GBase-ER 10G optics

86-16.01D(4) Features

Spanning-Tree Protocol support, including Rapid Spanning Tree Protocol (RSTP) and Multiple Spanning Tree Protocol (MSTP)
Support multiple Spanning Tree groups and a separate instance of Spanning Tree per VLAN
VLAN trunk creation supported from any port using IEEE 802.1Q trunking

86-16.01D(5) Quality of Service

IEEE 802.1p support on all ports
Differentiated Services (DiffServ) support on all ports
Minimum of four (4) network traffic queues for classification and queuing of network traffic

86-16.01D(6) Security

Multilevel access security
Media access control (MAC) address-based port level security
Access control lists (ACLs)

DocuSign Envelope ID: 894511EA-295B-49EB-A393-D26A6837FDD4

Remote Access Dial-In User Service (RADIUS) for user authentication, authorization, and accounting

86-16.01D(7) Management

Simple Network Management Protocol (SNMP), Remote Monitoring (RMON) or Switch Monitoring (SMON), Trivial File Transfer Protocol (TFTP) and Telnet interface support.
Network Time Protocol (NTP) for an accurate and consistent time stamp

86-16.01D(8) Alarms

SNMP trap generation and forwarding to network management system.
Multifunction LEDs per port for port status, half-duplex/ full-duplex indication, switch-level status LEDs for system, redundant power supply (RPS), and bandwidth utilization.

86-16.01D(9) Environmental

Operating temperature: 0° to 40° Celsius
Operating relative humidity: 10 to 95% non-condensing

86-16.01D(10) Power Supply

AC input voltage/frequency: 100 to 240 VAC, 50 to 60 Hz.
Redundant power supplies

86-16.01E Network Management Server Virtual Cluster Environment

86-16.01E(1) General:

Provide the hardware, Host and guest operating system platform for the Network Management software that is used for configuration and change control, monitor and manage all network devices of the Backhaul network, serve as the centralized logging server for events and alerts, authentication issues, and provide security services to the Backhaul network. Provide a policy-based tiered storage environment.

86-16.01E(2) Hardware Requirements:

Virtual Host Server:
Redundant rack mount servers. Maximum Height of the Host servers shall be 2 Rack Units.
Ability to provide for complete failover in the event of a catastrophic event.
CPU: Quad Core Capable processors
Memory: Minimum 64 GB RAM per server
Storage:
Hard Drives:
Hot-Swappable 10k, 15k, or flash Serial Attached SCSI (SAS) drives
RAID 5, 6, 10 supported configurations
At least 128GB usable disk space after RAID
Optical Drive: 16X DVD ROM Drive
Network Card:
Provide 8 NIC Ports of which four (4) ports are 10GigE SFP or RJ-45 Network Ports. Four (4) GigE RJ-45 NIC ports.
Four (4) x 10Gbps fiber optic SFP modules compatible with server and core switches if optic network ports are furnished on server
10Gbps iSCSI support with Jumbo Frames
HP Integrated Lights-Out (iLO) or BAIFA approved equal
Power: Dual Redundant Hot-Swappable Power Supply

Backup Server:
Single rack mount servers. Maximum Height of one(1) Rack Unit.
CPU: Quad Core Capable processors

DocuSign Envelope ID: 894511EA-295B-49EB-A393-D26A6837FDD4

Memory: Minimum 16 GB RAM
Storage:
Hard Drives:
Hot-Swappable 10k, 15k, or flash Serial Attached SCSI (SAS) drives
RAID 5, 6, 10 supported configurations
At least 300 GB usable disk space after RAID
Optical Drive: 16X DVD ROM Drive
Network Card:
Provide 4 NIC Ports of which two (2) ports are 10GigE SFP or RJ-45 Network Ports. Two (2) GigE RJ-45 NIC ports.
Two (2) x 10Gbps fiber optic SFP modules compatible with server and core switches if optic network ports are furnished on server
10Gbps iSCSI support with Jumbo Frames
HP Integrated Lights-Out (iLO) or BAIFA approved equal
Power: Dual Redundant Hot-Swappable Power Supply

Storage Array:

Features:
Data De-Duplication
Thin Provisioning
Cloning
User-defined manual and scheduled snapshots
Dynamic, nondisruptive expansion of any logical volume (LUN)
Dynamic, nondisruptive resize of any RAID pool
Software and hardware upgradeable without system downtime
Automatic policy-based data tiering based on file usage, age
Chassis: One (1) rack mount iSCSI-based storage array. Maximum Height of 3RU.
Storage:
Hard Drives:
Hot-Swappable 10k, 15k, or flash Serial Attached SCSI (SAS) drives
RAID 5, 6, 10, 50 supported configurations
Licensed and configured for snapshot based backups.
At least 7 TB usable disk space after RAID and creation of snapshot partition.
Storage Array Controller:
Dual 10GigE iSCSI-based controllers
Jumbo Frames Supported
Dedicated 10/100 or GigE Management Ports on each Controller
Management via SSH, HTTPS and SNMP v2 or SNMP v3.
Power: Dual Redundant Hot-Swappable Power Supply

86-16.01E(3) Software Requirements:

Operating System

Microsoft Windows Server 2012 for Hyper-V virtualization or BAIFA Approved Equal
Microsoft Windows Server 2012 64-bit for Backup Server or BAIFA Approved Equal
Microsoft Windows Server 2012 64-bit for NMS servers or BAIFA Approved Equal

86-16.01E(4) Miscellaneous:

Provide rack mount kits to install on-site rack furnished by others
Provide all of the necessary cables, kits, and miscellaneous hardware for complete installation

DocuSign Envelope ID: 894511EA-295B-49EB-A393-D26A6837FDD4

86-16.01F Firewall Appliance

86-16.01F(1) General:

All connections to the BAIFA network that interface with external autonomous systems (i.e. commercial leased communications, internet, external agencies, etc…) and wireless communications must be firewalled. In the event that Virtual Private Networks are configured, such connections must be encrypted with strong encryption and subject to review by BAIFA.

Provide seamless network connectivity via a Virtual Private Network (VPN) to the Backhaul network.

Utilize standard IPSec or SSL methods for establishment and method of VPN using strong (128-bit or better) encryption and data privacy methods.

Stateful packet inspection for inbound and outbound protection from unauthorized and malicious network communication transmissions.

Network Intrusion Detection and Prevention services (NIDS/NIPS) for inbound and outbound protection from unauthorized and malicious network communication transmissions.

86-16.01F(2) Physical:

Maximum of two (2) EIA rack-units (2 RU) high, mountable in EIA 19-inch rack furnished by others; or single slot line card compatible with Core switch chassis

Minimum of twelve (12) 100/1000 Base-T ports (RJ-45) with auto-negotiation

Minimum of eight (8) 1000 Base-X optical ports with hot swappable SFP GBICs

I/O Ports configurable for multiple zones including: External/Public, DMZ, Extranet, Internal/Private, and additional zones as required.

One (1) management console port for local PC connection and configuration

One (1) 10/100 management Ethernet port (RJ-45) with auto-negotiation

86-16.01F(3) Features:

Dynamic Host Control Protocol (DHCP) client and server compatibility

Ability to support a static IP address on “External/Public” interface

Port Address Translation (PAT) and Network Address Translation (NAT)

Configurable Message Transfer Unit (MTU) on interfaces

Minimum 2 Gbps Stateful Inspection / IPS throughput

Minimum 2 Gbps IPSec VPN throughput

Support for site-to-site VPN tunneling

Minimum 2000 concurrent IPSec VPN connections

Point-to-Point Protocol Over Ethernet (PPPoE) support for device authentication to network service provider’s network

Centralized role-based access control using Remote Dial-In User Authentication Service (RADIUS) support for authentication, authorization, and accounting

Configurable IP packet size

Configurable jitter buffering mechanism to compensate for packet delay variation (jitter) of up to 20 millisecond in the network

86-16.01F(4) Security

Tunneling protocol support: IP Security (IPSec) with Internet Key Encryption (IKE) key management

Capable of Intrusion Detection and Prevention Services (IDPS)

Encryption Algorithms, Key Management, and Authentication Algorithms:

Internet Protocol Security (IPSEC)

Data Encryption Standard (3DES)

DocuSign Envelope ID: 894511EA-295B-49EB-A393-D26A6837FDD4

AES (128/192/256-bit)
MD5
SHA-1
SHA-256/384/512

86-16.01F(5) Authentication:

Pre-shared secret, digital certificates, and/or pre-shared tokens
Browser intercepted user authentication

86-16.01F(6) Environmental:

Operating temperature: 0° to 40° Celsius
Operating relative humidity: 0 to 80% non-condensing

86-16.01F(7) Power Supply:

AC power supply supports 100 to 240 VAC at 50/60 Hz
Dual Power Supplies

86-16.01F(8) Management:

SNMP version 2 or higher, SSH, TFTP and Console, Web-Based HTTPS
Logging of events to Centralized logging server using Syslog

86-16.01F(9) Miscellaneous:

All firewalls shall be commercially available from a single manufacturer. Contractor shall standardize upon a single firewall manufacturer
Vendor maintenance service and all required licenses shall be provided for all network firewalls
All firewalls shall have the ability to create point to point encrypted tunnels over any network path
Firewall encryption shall support strong encryption
Provide rack mount kits to install in site EIA 19-inch rack furnished by others
Provide Ethernet Category 6 and fiber optic patch cable(s) to connect the Firewall device to Backhaul core switch and networks provided by others
Provide all of the necessary cables, kits, and miscellaneous hardware for complete installation

86-16.01G Remote Environmental Monitoring Hardware

86-16.01G(1) General:

Provide physical and environmental monitoring and security at each Backhaul location on a single rack mountable chassis
Provide remote camera for CCTV viewing
Provide camera-based motion detection
Provide door switch or door ajar monitoring
Provide microphone to capture and monitor audio
Provide temperature & humidity monitoring
Provide status of UPS and HVAC conditions
Provide analog and digital inputs

86-16.01G(2) Physical

Maximum of 1 EIA rack-units (RU) high per base chassis
Integrated sensors and port connections for all sensors in 86-3.05G(1) and expandable to at least four (4) additional sensor modules
Integrated Ethernet 10/100 Mbps RJ-45 Connector(s)
LEDs on base chassis and sensors modules to provide visual indication of hardware status
Sensor modules powered via connection to base chassis with no further external power required for each sensor module

DocuSign Envelope ID: 894511EA-295B-49EB-A393-D26A6837FDD4

86-16.01G(3) Features

Configurable thresholds for alerts
Send alerts via SMTP or SNMPv2 or higher traps; send alerts or status via syslog

86-16.01G(4) Security

Secure Management via SSL or HTTPS

86-16.01G(5) Environmental

Temperature: 2º to 50º C (35º F to 120º F)
Relative Humidity: 10% to 90% (non-condensing)
Designed for Outdoor Cabinet use

86-16.01G(6) Management

SNMP version 2 or higher, Web-Based GUI using HTTPS, Console and at least one of the following: SSH, TFTP
Provide logging of events to Centralized logging server using Syslog

86-16.01G(7) Miscellaneous

All remote environmental monitoring hardware shall be commercially available from a single manufacturer. Contractor shall standardize upon a single manufacturer
Provide rack mount kits to install in Backhaul cabinet racks furnished by Contractor and data center site EIA 19-inch racks furnished by others
Provide Ethernet Category 6 patch cable(s) to connect the base chassis device to network access switch(es)
Provide all of the necessary cables, kits, and miscellaneous hardware for complete installation

86-16.01H Tape Backup Storage System:

86-16.01H(1) General:

Provide drive and tape storage. Utilize 10GB iSCSI as the primary communications protocol. Backwards compatible with 1GB iSCSI.

86-16.01H(2) Software Features:

Disk-to-Disk and Disk-to-Tape backup automation based on user-defined storage policy

86-16.01H(3) Chassis:

Tape Library

One (1) rack mount 10gigabit iSCSI or Ethernet-based tape storage library. Maximum Height of 3RU.
Hardware-based encryption of 128-Bit AES or higher level encryption
Rewritable and Write Once Read Many (WORM)
Library slot capacity to hold a minimum of twelve (12) tape cartridges
Minimum data transfer rate to tape of 2.0TB/hr

86-3.05H(4) Tape:

Minimum Twelve (12) Tape Cartridges
LTO Ultrium 6 based storage and compression
Cartridge capacity of 2.5 TB native; 6.25 TB with data compression

86-16.01H(5) Management:

Management via SSH, HTTPS and SNMP v2 or higher.

86-16.01H(6) Power:

Dual Redundant Hot-Swappable Power Supply

86-16.01H(7) Network:

10GigE SFP or RJ-45 Network Port(s)
10Gbps iSCSI support with Jumbo Frames

DocuSign Envelope ID: 894511EA-295B-49EB-A393-D26A6837FDD4

Fiber optic SFP modules compatible with Tape Library and core switches if optic network ports are furnished on tape library

86-16.01I iSCSI-Based Managed Ethernet Switch

86-16.01I(1) General:

Capable of processing and forwarding iSCSI packets at full wirespeed (10Gbps) on all ports simultaneously

Support iSCSI optimization and management of switch protocols and features including configuration of ports and port channels, spanning-tree, jumbo frames, Unicast storm, flow control

86-16.01I(2) Chassis:

Rack Mounted. Maximum of 2 EIA RUs.

Mimimum of sixteen (12) 10GigE iSCSI-enabled ports.

Management console port for local PC connections and configuration

Ports fully compatible with Storage array and Host server iSCSI NICs

86-16.01I(3) Features:

Spanning-Tree Protocol support, including Rapid Spanning Tree Protocol (RSTP) and Multiple Spanning Tree Protocol (MSTP)

Support multiple Spanning Tree groups and a separate instance of Spanning Tree per VLAN

VLAN trunk creation supported from any port using IEEE 802.1Q trunking

Support multiple Spanning Tree groups and a separate instance of Spanning Tree per VLAN

VLAN trunk "pruning" support

86-16.01I(4) Quality of Service:

IEEE 802.1p support on all ports

Differentiated Services (DiffServ) support on all ports

Minimum of four (4) network traffic queues for classification and queuing of network traffic

86-16.01I(5) Security:

Multilevel access security

Media access control (MAC) address-based port level security

Access control lists (ACLs)

Remote Access Dial-In User Service (RADIUS) for user authentication, authorization, and accounting

86-16.01I(6) Management:

Simple Network Management Protocol (SNMP), Remote Monitoring (RMON) or Switch Monitoring (SMON), Trivial File Transfer Protocol (TFTP) and SSH interface support.

Network Time Protocol (NTP) for an accurate and consistent time stamp

86-16.01I(7) Alarms:

SNMP trap generation and forwarding to network management system.

Multifunction LEDs per port for port status, half-duplex/ full-duplex indication, switch-level status LEDs for system, redundant power supply (RPS), and bandwidth utilization.

86-16.01I(8) Environmental:

Operating temperature: 0° to 40° Celsius

Operating relative humidity: 10 to 90% non-condensing

86-16.01I(9) Power Supply:

AC input voltage/frequency: 100 to 240 VAC, 50 to 60 Hz.

Redundant power supplies

DocuSign Envelope ID: 894511EA-295B-49EB-A393-D26A6837FDD4

86-16.01J Miscellaneous

The Contractor shall:

Make the necessary electrical power connections from the network equipment to the UPS, PDU or appropriate electrical outlet provided by others

Provide horizontal and vertical slotted duct cable management (with removable covers) compatible with the accommodating rack (EIA 19-inch rack furnished by others)

Provide all of the necessary cables, kits, and miscellaneous hardware for complete installation

86-16.01K Spare Parts

Furnish the following spare network electronics:

Two (2) each of contractor supplied 10GBase-xR GBICS. For example, if 10GBase-LR GBIC is supplied by contractor, then include two (2) 10GBase-LR GBICs as spares.

One (1) 10gigabit optical Ethernet module that is compatible with the Core Ethernet Switch.

One (1) Distribution Hub Ethernet switch.

One (1) Access Ethernet switch

One (1) iSCSI-Based Managed Ethernet Switch

One (1) UPS for Roadside Backhaul Hub Cabinet Locations

One (1) UPS for Data Center Hub Locations if different model/capacity from roadside UPS.

One (1) Power Distribution Unit (PDU)

Two (2) Hard drives compatible with Network Management Virtual Environment Storage Array

Two (2) Hard drives compatible with Backup Server

Two (2) Hard drives compatible with Virtual Host Server, if different model/capacity from Backup server

Six (6) singlemode fiber optic patch cords with sufficient length and termination to be used at any Backhaul Hub or Data Center location.

Other spare parts as recommended by manufacturers and/or Contractor for maintenance.

For other electronics not listed above, furnish a recommended set of spare parts for the maintenance of the network. Installation and configuration of any and all spare parts shall be included in the price for the monthly maintenance.

86-17 KEY STAFF QUALIFICATIONS

The following list identifies individuals from your organization as key project personnel and describes the qualifications they must have. If more than one (1) individual is proposed for a key role, each must have the qualifications defined for the key role. The project principal and project manager key roles must be assigned to different individuals. Changes to key personnel will be subject to review and approval by BAIFA.

Project Principal

Qualifications: Eight (8) years previous experience on at least three (3) projects of similar size and technical scope, demonstrated individual success on referenced past projects.

Project Manager

DocuSign Envelope ID: 894511EA-295B-49EB-A393-D26A6837FDD4

Qualifications: Eight (8) years previous experience on at least two (2) projects of similar size and technical scope with demonstrated individual success on referenced past projects. Qualifying industry recognized certification such as the PMBOK PMP certification.

Maintenance Manager
Qualifications: Seven (7) years previous experience on at least two (2) projects of similar size and technical scope, demonstrated understanding of change control methodologies in a complex, multi-use, multi-service level environment, demonstrated individual success on referenced past projects. Previous experience in providing ongoing maintenance and support within a NOC environment is required.

Network Communications Implementation Manager, who will be responsible for implementation, integration, configuration, management and functionality of the entire Backhaul communications network, including all roadside and data center elements.

Qualifications: Industry- recognized advanced network certification such as Cisco Certified Network Professional or Cisco Certified Internetwork Expert, six (6) years previous experience on at least two (2) projects of similar size and technical scope, demonstrated individual success on referenced past projects.

Network Management System Implementation Engineer, who will be responsible for the configuration, integration and implementation of the Backhaul communications network management system (NMS) hardware, software and virtualization as well as overall Backhaul network and systems management, security and compliance.

Qualifications: Four (4) years previous experience on at least two (2) projects of similar size and technical scope, at least three (3) years' experience deploying, installing, configuring and integrating Bidder proposed network management and network security software suite, demonstrated individual success on referenced past projects.

Technicians, who will be responsible for the installation, configuration, and testing of the prescribed design as specified in this Contract. Technicians must be qualified to support all of the equipment after the installation including, but not limited to, break/fix service dispatch and equipment in external environments.

DocuSign Envelope ID: 894511EA-295B-49EB-A393-D26A6837FDD4

^^^

DocuSign Envelope ID: 894511EA-295B-49EB-A393-D26A6837FDD4

STANDARD PLANS LIST

The standard plan sheets applicable to this Contract include those listed below. The applicable revised standard plans (RSPs) listed below are included in the project plans.

ABBREVIATIONS, LINES, SYMBOLS AND LEGEND

A10A	**Abbreviations (Sheet 1 of 2)**
RSP A10B	**Abbreviations (Sheet 2 of 2)**
A10C	**Lines and Symbols (Sheet 1 of 3)**
A10D	**Lines and Symbols (Sheet 2 of 3)**
A10E	**Lines and Symbols (Sheet 3 of 3)**
RSP A85	**Chain Link Fence**
A85A	**Chain Link Fence Details**
D88	**Construction loads on culverts**
T56	**Temporary Water Pollution Control Details (Temporary Fiber Rolls)**
T62	**Temporary Water Pollution Control Details (Temporary Drainage Inlet Protection)**
T63	**Temporary Water Pollution Control Details (Temporary Drainage Inlet Protection)**
T64	**Temporary Water Pollution Control Details (Temporary Drainage Inlet Protection)**
RSP H1	**Landscape and Erosion Control Abbreviations**
RSP H2	**Landscape and Erosion Control Abbreviations**
H51	**Erosion Control Details (Fiber Roll and Compost Stock)**
RSP ES-1A	**Electrical Systems Legend and Abbreviations**
RSP ES-1B	**Electrical Systems Legend and Abbreviations**
RSP ES-1C	**Electrical Systems Legend and Abbreviations**
ES-2A	**Electrical Systems (Service Equipment)**
ES-2C	**Electrical Systems (Service Equipment Notes, Type III Series)**
ES-2D	**Electrical Systems (Service Equipment Enclosure and Typical Wiring**
ES-5A	**Diagram, Type III - A Series)**
RSP-ES-5B	**Electrical Systems (Detectors)**
	Electrical Systems (Detectors)
RSP ES-8A	**Electrical systems (Non-traffic pull box**
RSP ES-8B	**Electrical systems traffic pull box**
ES-9B	**Electrical systems (conduit riser and expansion fitting, structure installations**
ES-13A	**Electrical systems (splicing details)**
ES-13B	**Electrical Systems (Fuse Rating, Kinking and Banding Detail)**
RS1	**Roadside signs typical installation details no. 1.**
RS2	**Roadside signs, wood post, typical installation details no. 2**
RS4	**Roadside Signs, Typical Installation Details No. 4**
RSP T9	**Traffic Control System Tables for Lane and Ramp Closures**
RSP T10	**Traffic control system for lane closures on freeways or expressways.**
RSP T10A	**Traffic control system for lane closures on freeways or expressways.**

DocuSign Envelope ID: 894511EA-295B-49EB-A393-D26A6837FDD4

RSP T15	**Traffic control system for moving lane closure on multi-lane highways**
T61	**Temporary water pollution control details temporary drainage inlet protection.**

DocuSign Envelope ID: 894511EA-295B-49EB-A393-D26A6837FDD4

PART 11. OPERATIONS & MAINTENANCE PERFORMANCE REQUIREMENTS AND PENALTIES

DocuSign Envelope ID: 894511EA-295B-49EB-A393-D26A6837FDD4

ORGANIZATION

This **Part 11** sets forth the Performance Requirements for the Backhaul Network warranty and maintenance. The Performance Requirements are set as the minimum level of performance against which the Contractor will be measured during the warranty and maintenance periods of the Agreement.

Measurement & Applicability

1.1 Performance Requirements are defined as a Minimum Performance Measure.

1.2 General Operational Service Level Requirements have been detailed in Part 10, **86-15.02 Operations And Maintenance Support Service Level Requirements.** of this agreement. The Contractor must meet or exceed the service levels for the Backhaul assets and services identified in the table below and the table in 86-15.02C.

1.3 Reporting

Performance Requirements will be automatically calculated and reported for any specified configurable period, which will initially be set to one day. The calculation will be based on information automatically or manually entered into the Contractor's support systems comparing the actual parameter to the recorded parameter. Errors may be determined directly from Backhaul Network management system records, by observation, or inference based on historical information.

1.4 Table Definitions

The Performance Requirements tables include the following column definitions:

- **Area:** The category to which this Performance Requirement and penalty applies.
- **Initial Service Level Impact:** The "Type of Incident or Event" as defined in Section 86-15.02C of **Part 10.** This is the initial response and repair Service Level Impact assigned to any incident or event affecting the identified area. Each specific incident or event must be separately assessed and may be reclassified to a lower Service Level Impact classification as defined in Section 86-15.02C of **Part 10**, based on the circumstances associated with the incident or event and only if agreed to in writing by BAIFA. BAIFA reserves the right to reclassify incident or events into a higher service level impact classification and will inform the Contractor in writing. The "clock" will restart and the higher service level will apply immediately after BAIFA sends notification.
- **Penalties:** The amount assessed for failure to meet or comply with the Performance Requirements and the limitations to the penalties.

DocuSign Envelope ID: 894511EA-295B-49EB-A393-D26A6837FDD4

1.5 Stop Clock Conditions

1.5.1 At BAIFA's discretion, the Contractor may be excused from its obligation to meet the Performance Requirements for restoration/repair under certain conditions that will be referred to as "Stop Clock Conditions." Only the time during which such conditions are present will Contractor be excluded from the timeframes used to measure the Contractor's performance as set forth below:

1.5.1.1 PG&E electrical power disruption lasting more than sixty (60) minutes.

1.5.1.2 Loss of leased-line services caused by service provider, limited to the affected Backhaul Hub locations dependent on the leased-line services.

1.5.1.3 Loss of Backhaul Network availability due to physical changes by BAIFA, third party communications service providers and fiber optic infrastructure stakeholders (i.e. BART), collectively referred to as "Others", specifically:

- Reconfiguration, modification, replacement, move and removal of fiber optic cables, cross connections, patch panels and patch cables designated for the Backhaul and owned/managed by Others,
- De-energizing of Backhaul Hardware electronics by Others,
- Modification, move, replacement, and removal of Backhaul Hardware electronics by Others.

1.5.1.4 A "Force Majeure" event, i.e., any event beyond the control of the Contractor and not due to an act or omission of the Contractor that materially and adversely affects the Contractor's obligations hereunder and which event (or the effects of which event) could not have been avoided by due diligence and use of reasonable efforts by the Contractor including the following:

- Any earthquake, hurricane, flood or other natural disaster; or
- Any epidemic, blockade, rebellion, war, riot, act of sabotage or civil commotion, disastrous or extensive fire or explosion, act of terrorism, or strike.

DocuSign Envelope ID: 894511EA-295B-49EB-A393-D26A6837FDD4

Backhaul Network Performance Requirements

Upon automatic completion of Certification Testing for Segment I and Segment II, Performance Requirements and associated penalties for non-compliance of the Performance Requirements by the Contractor will immediately take effect. If Contractor does not meet or exceed the response and repair times for an incident as indicated in 18-15.02C, penalties as indicated in the table below shall apply. If more than one performance penalty is triggered during the same operations and maintenance billing period, due to non-compliance by the Contractor, the performance penalties will be cumulative but shall not exceed thirty percent (30%); provided however that if Contractor meets or exceeds response and repair times for all Critical incidents as indicated in the table in 18-15.02C, the cumulative performance penalties shall not exceed fifteen percent (15%). The Performance Requirements for the Contractor appear in Table 1 below.

Table 1: Backhaul Network Performance Requirements

No.	Area	Initial Service Level Impact	Penalties (BAIFA receives as credit towards Monthly Billing)
1.1	Core Switch Routing and Forwarding Subsystems (including hardware, firmware and user configurable settings)	Critical	15%
1.2	Firewall Routing and Forwarding, IPS and Stateful Filtering Subsystems (including hardware, firmware and user configurable settings)	Critical	15%
1.3	Distribution switch Routing and Forwarding Subsystems (including hardware, firmware and user configurable settings)	Critical	15%
1.4	Connectivity between the following Backhaul Hub locations and the 375 Beale and Benicia Toll Plaza Data Centers: I-80W, I-80E	Critical	15%
1.5	Outage affecting entire Hub site	Critical	15%
1.6	Excessive Packet Loss along the Fiber Optic Trunk (more than 1 percent during any working month)	Critical	15%
1.7	Complete loss of network services to the primary and Backup ELN data center(s)	Critical	15%
1.8	Complete loss of network services between two adjacent Backhaul roadside Hubs	Critical	15%
1.9	Failure to properly apply Critical Software/Firmware update or other security control(s) to provide remediation to a security incident	Critical	15%

DocuSign Envelope ID: 894511EA-295B-49EB-A393-D26A6837FDD4

No.	Area	Initial Service Level Impact	Penalties (BAIFA receives as credit towards Monthly Billing)
1.10	Failure of NMS to properly Backup Network configuration data	Priority	7.5%
1.11	Failure of NMS to properly log network monitoring data including SNMP traps, polling and syslog data	Priority	7.5%
1.12	Failure of remote environmental monitoring appliance or sensor to properly collect or transmit data	Priority	7.5%
1.13	Failure to correct QoS Policy enforcement failures, such as improper marking or dropping of high priority traffic	Priority	7.5%
1.14	Failure of NMS to properly archive backups in accordance with Backup policy	Non-Priority	5%
1.15	Failure of UPS to properly protect connected hardware from surges, spikes, and sags	Non-Priority	5%
1.16	Failure of PDU to properly protect connected hardware from surges, spikes, and sags	Non-Priority	5%
1.17	Failure to properly apply Critical Software/Firmware update	Low-Impact	2.5%
1.18	Failure to adequately respond to request for new or additional service	Low-Impact	2.5%
1.19	Failure to adequately respond to a request for information	Low-Impact	2.5%

DocuSign Envelope ID: 894511EA-295B-49EB-A393-D26A6837FDD4

APPENDIX A – CONTRACT DRAWINGS & PLANS

DocuSign Envelope ID: 894511EA-295B-49EB-A393-D26A6837FDD4

APPENDIX B – CALTRANS REVISED STANDARD SPECIFICATIONS

DocuSign Envelope ID: 894511EA-295B-49EB-A393-D26A6837FDD4

REVISED STANDARD SPECIFICATIONS APPLICABLE TO THE 2010 EDITION OF THE STANDARD SPECIFICATIONS

DocuSign Envelope ID: 894511EA-295B-49EB-A393-D26A6837FDD4

REVISED STANDARD SPECIFICATIONS DATED 10-17-14

ORGANIZATION

Revised standard specifications are under headings that correspond with the main-section headings of the *Standard Specifications*. A main-section heading is a heading shown in the table of contents of the *Standard Specifications*. A date under a main-section heading is the date of the latest revision to the section.

Each revision to the *Standard Specifications* begins with a revision clause that describes or introduces a revision to the *Standard Specifications*. For a revision clause that describes a revision, the date on the right above the clause is the publication date of the revision. For a revision clause that introduces a revision, the date on the right above a revised term, phrase, clause, paragraph, or section is the publication date of the revised term, phrase, clause, paragraph, or section. For a multiple-paragraph or multiple-section revision, the date on the right above a paragraph or section is the publication date of the paragraphs or sections that follow.

Any paragraph added or deleted by a revision clause does not change the paragraph numbering of the *Standard Specifications* for any other reference to a paragraph of the *Standard Specifications*.

^^^

DocuSign Envelope ID: 894511EA-295B-49EB-A393-D26A6837FDD4

Add to the 1st table in section 1-1.06:

10-17-14

LCS	Department's lane closure system
POC	pedestrian overcrossing
QSD	qualified SWPPP developer
QSP	qualified SWPPP practitioner
SDS	safety data sheet
TRO	time-related overhead
WPC	water pollution control

Add to the notes of the 1st table in section 1-1.06:

10-17-14

[b]Interpret a reference to MSDS as a reference to SDS under 29 CFR 1910.1200.

06-20-12

Delete the abbreviation and its meaning for *UDBE* in the 1st table of section 1-1.06.

10-19-12

Delete "Contract completion date" and its definition in section 1-1.07B.

10-19-12

Delete "critical delay" and its definition in section 1-1.07B.

Replace "day" and its definition in section 1-1.07B with:

10-19-12

day: 24 consecutive hours running from midnight to midnight; calendar day.

1. **business day:** Day on the calendar except a Saturday and a holiday.
2. **working day:** Time measure unit for work progress. A working day is any 24-consecutive-hour period except:
   - 2.1. Saturday and holiday.
   - 2.2. Day during which you cannot perform work on the controlling activity for at least 50 percent of the scheduled work shift with at least 50 percent of the scheduled labor and equipment due to any of the following:
     - 2.2.1. Adverse weather-related conditions.
     - 2.2.2. Maintaining traffic under the Contract.
     - 2.2.3. Suspension of a controlling activity that you and the Engineer agree benefits both parties.
     - 2.2.4. Unanticipated event not caused by either party such as:
       - 2.2.4.1. Act of God.
       - 2.2.4.2. Act of a public enemy.
       - 2.2.4.3. Epidemic.
       - 2.2.4.4. Fire.
       - 2.2.4.5. Flood.
       - 2.2.4.6. Governor-declared state of emergency.
       - 2.2.4.7. Landslide.
       - 2.2.4.8. Quarantine restriction.
     - 2.2.5. Issue involving a third party, including:
       - 2.2.5.1. Industry or area-wide labor strike.

DocuSign Envelope ID: 894511EA-295B-49EB-A393-D26A6837FDD4

2.2.5.2. Material shortage.
2.2.5.3. Freight embargo.
2.2.5.4. Jurisdictional requirement of a law enforcement agency.
2.2.5.5. Workforce labor dispute of a utility or nonhighway facility owner resulting in a nonhighway facility rearrangement not described and not solely for the Contractor's convenience. Rearrangement of a nonhighway facility includes installation, relocation, alteration, or removal of the facility.

2.3. Day during a concurrent delay.

3. **original working days:**
   3.1. Working days to complete the work shown on the *Notice to Bidders* for a non–cost plus time based bid.
   3.2. Working days bid to complete the work for a cost plus time based bid.

Where working days is specified without the modifier "original" in the context of the number of working days to complete the work, interpret the number as the number of original working days as adjusted by any time adjustment.

Replace "Contract" in the definition of "early completion time" in section 1-1.07B with:

10-19-12

work

Replace "excusable delay" and its definition in section 1-1.07B with:

10-19-12

delay: Event that extends the completion of an activity.

1. **excusable delay:** Delay caused by the Department and not reasonably foreseeable when the work began such as:
   1.1. Change in the work
   1.2. Department action that is not part of the Contract
   1.3. Presence of an underground utility main not described in the Contract or in a location substantially different from that specified
   1.4. Described facility rearrangement not rearranged as described, by the utility owner by the date specified, unless the rearrangement is solely for the Contractor's convenience
   1.5. Department's failure to obtain timely access to the right-of-way
   1.6. Department's failure to review a submittal or provide notification in the time specified
2. **critical delay:** Excusable delay that extends the scheduled completion date
3. **concurrent delay:** Occurrence of at least 2 of the following events in the same period of time, either partially or entirely:
   3.1. Critical delay
   3.2. Delay to a controlling activity caused by you
   3.3. Non–working day

Replace "project" in the definition of "scheduled completion date" in section 1-1.07B with:

10-19-12

work

DocuSign Envelope ID: 894511EA-295B-49EB-A393-D26A6837FDD4

Add to section 1-1.07B:

10-19-12

Contract time: Number of original working days as adjusted by any time adjustment.

06-20-12

Disadvantaged Business Enterprise: Disadvantaged Business Enterprise as defined in 49 CFR 26.5.

Replace "PO BOX 911" in the District 3 mailing address in the table in section 1-1.08 with:

04-20-12

703 B ST

Replace the Web site for the Department of General Services, Office of Small Business and DVBE Services in the table in section 1-1.11 with:

11-15-13

http://www.dgs.ca.gov/dgs/ProgramsServices/BusServices.aspx

^^

2 BIDDING

10-17-14

Replace the headings and paragraphs in section 2 with:

02-21-14

2-1.01 GENERAL

Section 2 includes specifications related to bid eligibility and the bidding process.
The electronic bid specifications in section 2 apply if *Electronic Bidding Contract* is shown on the cover of the *Notice to Bidders and Special Provisions*.

2-1.02 BID INELIGIBILITY

A firm that has provided architectural or engineering services to the Department for this contract before bid submittal for this contract is prohibited from any of the following:

1. Submitting a bid
2. Subcontracting for a part of the work
3. Supplying materials

2-1.03–2-1.05 RESERVED

10-17-14

2-1.06 BID DOCUMENTS

2-1.06A General

Standard Specifications and *Standard Plans* may be viewed at the Bidders' Exchange website and may be purchased at the Publication Distribution Unit.
The *Notice to Bidders and Special Provisions* and project plans may be viewed at the Bidders' Exchange website.
Bid books may be ordered at the Bidders' Exchange website.
The *Notice to Bidders and Special Provisions* includes the *Notice to Bidders*, revised standard specifications, and special provisions.

2-1.06B Supplemental Project Information

The Department makes supplemental information available as specified in the special provisions.
Logs of test borings are supplemental project information.

DocuSign Envelope ID: 894511EA-295B-49EB-A393-D26A6837FDD4

If an *Information Handout* or cross sections are available, you may view them at the Contract Plans and Special Provisions link at the Bidders' Exchange website.
If rock cores are available, you may view them by sending a request to Coreroom@dot.ca.gov.
If other supplemental project information is available for inspection, you may view it by phoning in a request.
Make your request at least 7 days before viewing. Include in your request:

1. District-County-Route
2. Contract number
3. Viewing date
4. Contact information, including telephone number

For rock cores, also include the bridge number in your request.
If bridge as-built drawings are available:

1. For a project in District 1 through 6 or 10, you may request them from the Office of Structure Maintenance and Investigations, fax (916) 227-8357
2. For a project in District 7, 8, 9, 11, or 12, you may request them from the Office of Structure Maintenance and Investigations, fax (916) 227-8357, and they are available at the Office of Structure Maintenance and Investigations, Los Angeles, CA, telephone (213) 897-0877

As-built drawings may not show existing dimensions and conditions. Where new construction dimensions are dependent on existing bridge dimensions, verify the field dimensions and adjust dimensions of the work to fit existing conditions.

2-1.06C–2-1.06D Reserved

2-1.07 JOB SITE AND DOCUMENT EXAMINATION

Examine the job site and bid documents. Notify the Department of apparent errors and patent ambiguities in the plans, specifications, and Bid Item List. Failure to do so may result in rejection of a bid or recession of an award.
Bid submission is your acknowledgment that you have examined the job site and bid documents and are satisfied with:

1. General and local conditions to be encountered
2. Character, quality, and scope of work to be performed
3. Quantities of materials to be furnished
4. Character, quality, and quantity of surface and subsurface materials or obstacles
5. Requirements of the contract

02-21-14

2-1.08 RESERVED

2-1.09 BID ITEM LIST

Submit a bid based on the bid item quantities the Department shows on the Bid Item List.

06-06-14

2-1.10 SUBCONTRACTOR LIST

On the Subcontractor List form, list each subcontractor to perform work in an amount in excess of 1/2 of 1 percent of the total bid or $10,000, whichever is greater (Pub Cont Code § 4100 et seq.).
For each subcontractor listed, the Subcontractor List form must show:

1. Business name and the location of its place of business.
2. For a non-federal-aid contract, its California contractor license number.
3. Portion of work it will perform. Show the portion of the work by:
   - 3.1. Description of portion of subcontracted work
   - 3.2. Bid item numbers for the work involved in the portion of work listed
   - 3.3. Percentage of the portion of work in each bid item listed

DocuSign Envelope ID: 894511EA-295B-49EB-A393-D26A6837FDD4

02-21-14

2-1.11 RESERVED

2-1.12 DISADVANTAGED BUSINESS ENTERPRISES

2-1.12A General

Section 2-1.12 applies to a federal-aid contract.
Under 49 CFR 26.13(b):

> The contractor, sub recipient or subcontractor shall not discriminate on the basis of race, color, national origin, or sex in the performance of this contract. The contractor shall carry out applicable requirements of 49 CFR part 26 in the award and administration of DOT-assisted contracts. Failure by the contractor to carry out these requirements is a material breach of this contract, which may result in the termination of this contract or such other remedy as the recipient deems appropriate.

Take necessary and reasonable steps to ensure that DBEs have opportunity to participate in the Contract (49 CFR 26).

2-1.12B Disadvantaged Business Enterprise Goal

2-1.12B(1) General

Section 2-1.12B applies if a DBE goal is shown on the *Notice to Bidders*.
To ensure equal participation of DBEs provided in 49 CFR 26.5, the Department shows a goal for DBEs.
Make work available to DBEs and select work parts consistent with available DBE subcontractors and suppliers.
Meet the DBE goal shown on the *Notice to Bidders* or demonstrate that you made adequate good faith efforts to meet this goal.
You are responsible to verify that the at the bid opening date the DBE firm is certified as DBE by the CA Unified Certification Program.
All DBE participation will count toward the Department's federally-mandated statewide overall DBE goal.
Credit for materials or supplies you purchase from DBEs counts toward the goal in the following manner:

1. 100 percent if the materials or supplies are obtained from a DBE manufacturer.
2. 60 percent if the materials or supplies are obtained from a DBE regular dealer.
3. Only fees, commissions, and charges for assistance in the procurement and delivery of materials or supplies, if they are obtained from a DBE that is neither a manufacturer nor regular dealer. 49 CFR 26.55 defines "manufacturer" and "regular dealer."

You receive credit toward the goal if you employ a DBE trucking company that performs a commercially useful function as defined in 49 CFR 26.55(d)(1)–(4), (6).

2-1.12B(2) DBE Commitment Submittal

Submit DBE information under section 2-1.33.
Bidders other than the apparent low Bidder, the 2nd low Bidder, and the 3rd low Bidder are not required to submit the DBE commitment form unless the Department requests it. If the Department requests a DBE commitment form from you, submit the completed form within 4 business days of the request.
Submit written confirmation from each DBE shown on the form stating that it will be participating in the Contract. Include confirmation with the DBE commitment form. A copy of a DBE's quote will serve as written confirmation that the DBE will be participating in the Contract.

DocuSign Envelope ID: 894511EA-295B-49EB-A393-D26A6837FDD4

2-1.12B(3) Good Faith Efforts Submittal

If you have not met the DBE goal, complete and submit the Good Faith Efforts Documentation under section 2-1.33 showing that you made adequate good faith efforts to meet the goal. Only good faith efforts directed toward obtaining participation by DBEs are considered.

If your DBE commitment form shows that you have met the DBE goal or if you are required to submit the DBE commitment form, you must submit good faith efforts documentation within the specified time to protect your eligibility for award of the contract in the event the Department finds that the DBE goal has not been met.

The Department may consider DBE commitments of the 2nd and 3rd Bidders in determining whether the low Bidder made good faith efforts to meet the DBE goal.

2-1.13–2-1.14 RESERVED

2-1.15 DISABLED VETERAN BUSINESS ENTERPRISES

2-1.15A General

Section 2-1.15 applies to a non-federal-aid contract.

Take necessary and reasonable steps to ensure that DVBEs have opportunity to participate in the Contract.

Comply with Mil & Vet Code § 999 et seq.

2-1.15B Projects $5 Million or Less

Section 2-1.15B applies to a project with an estimated cost of $5 million or less.

Make work available to DVBEs and select work parts consistent with available DVBE subcontractors and suppliers.

Meet the goal shown on the *Notice to Bidders*.

Complete and submit the Certified DVBE Summary form under section 2-1.33. List all DVBE participation on this form.

If a DVBE joint venture is used, submit the joint venture agreement with the Certified DVBE Summary form.

List each 1st-tier DVBE subcontractor on the Subcontractor List form regardless of percentage of the total bid.

2-1.15C Projects More Than $5 Million

2-1.15C(1) General

Section 2-1.15C applies to a project with an estimated cost of more than $5 million.

The Department encourages Bidders to obtain DVBE participation to ensure the Department achieves its State-mandated overall DVBE goal.

If you obtain DVBE participation:

1. Complete and submit the Certified DVBE Summary form under section 2-1.33. List all DVBE participation on this form.
2. List each 1st tier DVBE subcontractor in the Subcontractor List form regardless of percentage of the total bid.

If a DVBE joint venture is used, submit the joint venture agreement with the Certified DVBE Summary form.

2-1.15C(2) DVBE Incentive

The Department grants a DVBE incentive to each Bidder who achieves a DVBE participation of 1 percent or greater (Mil & Vet Code 999.5 and Code of Regs § 1896.98 et seq.).

To receive this incentive, submit the Certified DVBE Summary form under section 2-1.33.

Bidders other than the apparent low Bidder, the 2nd low Bidder, and the 3rd low Bidder may be required to submit the Certified DVBE Summary form if the bid ranking changes. If the

DocuSign Envelope ID: 894511EA-295B-49EB-A393-D26A6837FDD4

Department requests a Certified DVBE Summary form from you, submit the completed form within 4 business days of the request.

2-1.15C(3) Incentive Evaluation

The Department applies the small business and non–small business preference during bid verification and proceeds with the evaluation specified below for DVBE incentive.

The DVBE incentive is a reduction, for bid comparison only, in the total bid submitted by the lesser of the following amounts:

1. Percentage of DVBE achievement rounded to 2 decimal places of the verified total bid of the low Bidder
2. 5 percent of the verified total bid of the low Bidder
3. $250,000

The Department applies DVBE incentive and determines whether bid ranking changes.

A non–small business Bidder cannot displace a small business Bidder. However, a small business Bidder with higher DVBE achievement can displace another small business Bidder.

The Department proceeds with awarding the contract to the new low Bidder and posts the new verified bid results at the Department's Web site.

2-1.16–2-1.17 RESERVED

2-1.18 SMALL BUSINESS AND NON–SMALL BUSINESS SUBCONTRACTOR PREFERENCES

2-1.18A General

Section 2-1.18 applies to a non-federal-aid contract.

The Department applies small business preferences and non–small business preferences under Govt Code § 14835 et seq. and 2 CA Code of Regs § 1896 et seq.

Any contractor, subcontractor, supplier, or service provider who qualifies as a small business is encouraged to apply for certification as a small business by submitting its application to the Department of General Services, Office of Small Business and DVBE Services.

Contract award is based on the total bid, not the reduced bid.

2-1.18B Small Business Preference

The Department allows a Bidder certified as a small business by the Department of General Services, Office of Small Business and DVBE Services, a preference if:

1. Bidder submitted a completed Request for Small Business Preference or Non–Small Business Preference form with its bid
2. Low Bidder did not request the preference or is not certified as a small business

The Bidder's signature on the Request for Small Business Preference or Non–Small Business Preference form certifies that the Bidder is certified as a small business at the date and time of bid or has submitted a complete application to the Department of General Services. The complete application and any required substantiating documentation must be received by the Department of General Services by 5:00 p.m. on the bid opening date.

The Department of General Services determines whether a Bidder was certified on the bid opening date. The Department of Transportation confirms the Bidder's status as a small business before applying the small business preference.

The small business preference is a reduction for bid comparison in the total bid submitted by the small business contractor by the lesser of the following amounts:

1. 5 percent of the verified total bid of the low Bidder
2. $50,000

DocuSign Envelope ID: 894511EA-295B-49EB-A393-D26A6837FDD4

If the Department determines that a certified small business Bidder is the low Bidder after the application of the small business preference, the Department does not consider a request for non–small business preference.

2-1.18C Non–Small Business Subcontractor Preference

The Department allows a Bidder not certified as a small business by the Department of General Services, Office of Small Business and DVBE Services, a preference if:

1. Bidder submitted a completed Request for Small Business Preference or Non–Small Business Preference form with its bid
2. Certified Small Business Listing for the Non–Small Business Preference form shows that you are subcontracting at least 25 percent to certified small businesses

Each listed subcontractor and supplier must be certified as a small business at the date and time of bid or must have submitted a complete application to the Department of General Services. The complete application and any required substantiating documentation must be received by the Department of General Services by 5:00 p.m. on the bid opening date.

The non–small business subcontractor preference is a reduction for bid comparison in the total bid submitted by the non–small business contractor requesting the preference by the lesser of the following amounts:

1. 5 percent of the verified total bid of the low Bidder
2. $50,000

2-1.19–2-1.26 RESERVED

2-1.27 CALIFORNIA COMPANIES

Section 2-1.27 applies to a non-federal-aid contract.

Under Pub Cont Code § 6107, the Department gives preference to a "California company," as defined, for bid comparison purposes over a nonresident contractor from any state that gives or requires a preference to be given to contractors from that state on its public entity construction contracts.

Complete a California Company Preference form.

The California company reciprocal preference amount is equal to the preference amount applied by the state of the nonresident contractor with the lowest responsive bid unless the California company is eligible for a small business preference or a non–small business subcontractor preference, in which case the preference amount is the greater of the two, but not both.

If the low Bidder is not a California company and a California company's bid with reciprocal preference is equal to or less than the lowest bid, the Department awards the contract to the California company on the basis of its total bid.

2-1.28 RESERVED

2-1.29 OPT OUT OF PAYMENT ADJUSTMENTS FOR PRICE INDEX FLUCTUATIONS

You may opt out of the payment adjustments for price index fluctuations specified in section 9-1.07. To opt out, submit a completed Opt Out of Payment Adjustments for Price Index Fluctuations form under section 2-1.33.

2-1.30–2-1.32 RESERVED

06-06-14

2-1.33 BID DOCUMENT COMPLETION AND SUBMITTAL

Complete forms in the *Bid* book.

For a paper bid, submit your bid:

1. Under sealed cover
2. Marked as a bid

DocuSign Envelope ID: 894511EA-295B-49EB-A393-D26A6837FDD4

3. Identifying the contract number and the bid opening date

For an electronic bid, complete and submit the *Bid* book under the *Electronic Bidding Guide* at the Bidders' Exchange website.

Submit the forms and form information at the times shown in the following table:

Bid Form Submittal Schedule				
Contract type	Forms to be submitted at the time of bid	Forms to be submitted no later than 24 hours after bid opening[a]	Forms to be submitted no later than 4 p.m. on the 2nd business day after bid opening[a]	Forms to be submitted no later than 4 p.m. on the 4th business day after bid opening[a]
All contracts	• Bid to the Department of Transportation • Business name and location and description of portion of subcontracted work on the Subcontractor List • Opt Out of Payment Adjustments for Price Index Fluctuations[c]	• Bid item nos. and percentage of bid item subcontracted on the Subcontractor List[b]	--	--
Non-federal-aid contracts only	• California contractor license number on the Subcontractor List • California Company Preference • Request for Small Business Preference or Non–Small Business Preference[c]	--	• Certified Small Business Listing for the Non–Small Business Preference[c]	• Certified DVBE Summary[d]
Federal-aid contracts only	• Small Business Status	--	--	• Caltrans Bidder - DBE - Commitment[e] • Good Faith Efforts Documentation - DBE[f]

[a]The forms and information may be submitted at the time of bid.
[b]If the information is not submitted at the time of bid, fax it to (916) 227-6282. This after-bid submittal does not apply to an informal-bid contract. For an informal bid contract, submit the completed form at the time of bid.
[c]Applicable only if the preference or option is chosen.
[d]Not applicable to an informal-bid contract or a project with an estimated cost of more than $5 million. For an informal bid contract, submit the completed form at the time of bid. For a project with an estimated cost of more than $5 million, applicable only if you obtain DVBE participation or you are the apparent low Bidder, 2nd low Bidder, or 3rd low Bidder and you choose to receive the specified incentive.
[e]If not submitted at the time of bid, applicable only to the apparent low Bidder, 2nd low Bidder, and 3rd low Bidder.
[f]Applicable only if you have not met the DBE goal.

For an electronic bid:

1. Forms to be submitted at the time of bid must be submitted as described in the *Electronic Bidding Guide* or faxed to (916) 227-6282 before the bid opening date and time.
2. Your authorized digital signature is your confirmation of and agreement to all certifications and statements contained in the *Bid* book.

DocuSign Envelope ID: 894511EA-295B-49EB-A393-D26A6837FDD4

3. On forms and certifications that you submit through the electronic bidding service, you agree that each form and certification where a signature is required is deemed as having your signature. On forms that you submit after bid opening, sign the forms where a signature is required in ink.

Failure to submit the forms and information as specified results in a nonresponsive bid.
If an agent other than the authorized corporation officer or a partnership member signs the bid, file a Power of Attorney with the Department either before opening bids or with the bid. Otherwise, the bid may be nonresponsive.

02-21-14

2-1.34 BIDDER'S SECURITY

Submit one of the following forms of Bidder's security equal to at least 10 percent of the bid:
1. Cash
2. Cashier's check
3. Certified check
4. Signed Bidder's bond by an admitted surety insurer
5. For an electronic bid, electronic Bidder's bond by an admitted surety insurer submitted using an electronic registry service approved by the Department.

Submit cash, cashier's check, certified check, or Bidder's bond to the Department at the Bidders Exchange before the bid opening time.
Submit electronic Bidder's bond with the electronic bid.
If using a Bidder's bond, you may use the form in the *Bid* book. If you do not use the form in the *Bid* book, use a form containing the same information.

2-1.35–2-1.39 RESERVED

2-1.40 BID WITHDRAWAL

For a paper bid:
1. An authorized agent may withdraw a bid before the bid opening date and time by submitting a written bid withdrawal request at the location where the bid was submitted. Withdrawing a bid does not prevent you from submitting a new bid.
2. After the bid opening time, you cannot withdraw a bid.

For an electronic bid:
1. Bids are not filed with the Department until the date and time of bid opening.
2. A Bidder may withdraw or revise a bid after it has been submitted to the electronic bidding service if this is done before the bid opening date and time.

2-1.41–2-1.42 RESERVED

2-1.43 BID OPENING

The Department publicly opens and reads bids at the time and place shown on the *Notice to Bidders*.

2-1.44–2-1.45 RESERVED

2-1.46 DEPARTMENT'S DECISION ON BID

The Department's decision on the bid amount is final.
The Department may reject:
1. All bids
2. A nonresponsive bid

DocuSign Envelope ID: 894511EA-295B-49EB-A393-D26A6837FDD4

2-1.47 BID RELIEF

The Department may grant bid relief under Pub Cont Code § 5100 et seq. Submit any request for bid relief to the Office Engineer. The Relief of Bid Request form is available at the Department's website.

2-1.48 RESERVED

2-1.49 SUBMITTAL FAILURE HISTORY

The Department considers a Bidder's past failure to submit documents required after bid opening in determining a Bidder's responsibility.

2-1.50 BID RIGGING

Section 2-1.50 applies to a federal-aid contract.

The U.S. Department of Transportation (DOT) provides a toll-free hotline to report bid rigging activities. Use the hotline to report bid rigging, Bidder collusion, and other fraudulent activities. The hotline number is (800) 424-9071. The service is available 24 hours 7 days a week and is confidential and anonymous.. The hotline is part of the DOT's effort to identify and investigate highway construction contract fraud and abuse and is operated under the direction of the DOT Inspector General.

^^

3 CONTRACT AWARD AND EXECUTION

02-21-14

Replace section 3-1.02 with:

02-21-14

3-1.02 CONSIDERATION OF BIDS

3-1.02A General

For a lump sum based bid, the Department compares bids based on the total price.

For a unit price based bid, the Department compares bids based on the sum of the item totals.

For a cost plus time based bid, the Department compares bids based on the sum of the item totals and the total bid for time.

3-1.02B Tied Bids

The Department breaks a tied bid with a coin toss except:

1. If a small business Bidder and a non–small business Bidder request preferences and the reductions result in a tied bid, the Department awards the contract to the small business Bidder.
2. If a DVBE small business Bidder and a non-DVBE small business Bidder request preferences and the reduction results in a tied bid, the Department awards the contract to the DVBE small business Bidder.

Add to the end of section 3-1.04:

10-19-12

You may request to extend the award period by faxing a request to (916) 227-6282 before 4:00 p.m. on the last day of the award period. If you do not make this request, after the specified award period:

1. Your bid becomes invalid
2. You are not eligible for the award of the contract

DocuSign Envelope ID: 894511EA-295B-49EB-A393-D26A6837FDD4

Replace the paragraph in section 3-1.11 with:

10-19-12

Complete and deliver to the Office Engineer a *Payee Data Record* when requested by the Department.

Replace section 3-1.13 with:

07-27-12

3-1.13 FORM FHWA-1273

For a federal-aid contract, form FHWA-1273 is included with the Contract form in the documents sent to the successful Bidder for execution. Comply with its provisions. Interpret the training and promotion section as specified in section 7-1.11A.

Add to item 1 in the list in the 2nd paragraph of section 3-1.18:

07-27-12

, including the attached form FHWA-1273

10-19-12

Delete item 4 of the 2nd paragraph of section 3-1.18.

^^

5 CONTROL OF WORK

05-30-14

Add between "million" and ", professionally" in the 3rd paragraph of section 5-1.09A:

10-19-12

and 100 or more working days

Add to the list in the 4th paragraph of section 5-1.09A:

10-19-12

9. Considering discussing with and involving all stakeholders in evaluating potential VECPs

Add to the end of item 1.1 in the list in the 7th paragraph of section 5-1.09A:

10-19-12

, including VECPs

Replace the 1st paragraph of section 5-1.09C with:

10-19-12

For a contract with a total bid over $10 million and 100 or more working days, training in partnering skills development is required.

10-19-12

Delete the 2nd paragraph of section 5-1.09C.

Replace "at least 2 representatives" in the 5th paragraph of section 5-1.09C with:

10-19-12

field supervisory personnel

DocuSign Envelope ID: 894511EA-295B-49EB-A393-D26A6837FDD4

Replace the 1st and 2nd sentences in the 7th paragraph of section 5-1.13B(1) with:

06-20-12

If a DBE is decertified before completing its work, the DBE must notify you in writing of the decertification date. If a business becomes a certified DBE before completing its work, the business must notify you in writing of the certification date.

Replace "90" in the last sentence of the 7th paragraph of section 5-1.13B(1) with:

06-20-12

30

Replace "Underutilized" in "Underutilized Disadvantaged Business Enterprises" in the heading of section 5-1.13B(2) with:

06-20-12

Performance of

06-20-12

Delete *U* in *UDBE* at each occurrence in section 5-1.13B(2).

Replace the 3rd paragraph of section 5-1.13B(2) with:

06-20-12

Do not terminate or substitute a listed DBE for convenience and perform the work with your own forces or obtain materials from other sources without authorization from the Department.

Replace item 6 in the list in the 4th paragraph of section 5-1.13B(2) with:

06-20-12

6. Listed DBE is ineligible to work on the project because of suspension or debarment.

Add to the list in the 4th paragraph of section 5-1.13B(2):

06-20-12

8. Listed DBE voluntarily withdraws with written notice from the Contract.
9. Listed DBE is ineligible to receive credit for the type of work required.
10. Listed DBE owner dies or becomes disabled resulting in the inability to perform the work on the Contract.
11. Department determines other documented good cause.

Add between the 4th and 5th paragraphs of section 5-1.13B(2):

07-20-12

Notify the original DBE of your intent to use other forces or material sources and provide the reasons. Provide the DBE with 5 days to respond to your notice and advise you and the Department of the reasons why the use of other forces or sources of materials should not occur. Your request to use other forces or material sources must include:

1. 1 or more of the reasons listed in the preceding paragraph
2. Notices from you to the DBE regarding the request
3. Notices from the DBE to you regarding the request

Add between "terminated" and ", you" in the 5th paragraph of section 5-1.13B(2):

07-20-12

or substituted

DocuSign Envelope ID: 894511EA-295B-49EB-A393-D26A6837FDD4

Replace the paragraphs of section 5-1.13C with:

11-15-13

Section 5-1.13C applies to a non-federal-aid contract.
Use each DVBE as shown on the *Certified DVBE Summary* form unless you receive authorization from the Department for a substitution. The substitute must be another DVBE unless DVBEs are not available, in which case, you must substitute with a small business. Any authorization for a substitute is contingent upon the Department of General Services' approval of the substitute.
The requirement that DVBEs be certified by the bid opening date does not apply to DVBE substitutions after Contract award.
The Department authorizes substitutions for any of the reasons provided in 2 CA Code of Regs § 1896.73.
Include in your substitution request:
1. Copy of the written notice issued to the DVBE with proof of delivery
2. Copy of the DVBE's response to the notice
3. Name and certification number of the listed DVBE and the proposed substitute

Requests for substitutions of a listed DVBE with a small business must include documentation of the unavailability of DVBEs, including:
1. Contact with the small business/DVBE advocate from the Department and the Department of Veterans Affairs
2. Search results from the Department of General Services' website of available DVBEs
3. Communication with a DVBE community organization nearest the job site, if applicable
4. Documented communication with the DVBE and small businesses describing the work to be performed, the percentage of the total bid, the corresponding dollar amount, and the responses to the communication

The Department forwards your substitution request to the Department of General Services. The Department of General Services issues a notice of approval or denial. The Department provides you this notice.
If you fail to use a listed DVBE without an authorized substitution request, the Department issues a penalty of up to 10 percent of the dollar amount of the work of the listed DVBE.
Maintain records of subcontracts made with DVBEs. Include in the records:
1. Name and business address of each business
2. Total amount paid to each business

For the purpose of determining compliance with Pub Cont Code § 10115 et seq.:
1. Upon work completion, complete and submit *Final Report - Utilization of Disabled Veteran Business Enterprises (DVBE) State Funded Projects Only* form.
2. Upon reasonable notice and during normal business hours, permit access to its premises for the purposes of:
   2.1. Interviewing employees.
   2.2. Inspecting and copying books, records, accounts and other material that may be relevant to a matter under investigation.

DocuSign Envelope ID: 894511EA-295B-49EB-A393-D26A6837FDD4

Replace "Reserved" in section 5-1.20C with:

10-19-12

If the Contract includes an agreement with a railroad company, the Department makes the provisions of the agreement available in the *Information Handout* in the document titled "Railroad Relations and Insurance Requirements." Comply with the requirements in the document.

Replace section 5-1.20E with:

05-30-14

5-1.20E Water Meter Charges

Section 5-1.20E applies if a bid item for water meter charges is shown on the Bid Item List. The charges are specified in a special provision for section 5-1.20E.
The local water authority will install the water meters.
The charges by the local water authority include:

1. Furnishing and installing each water meter
2. Connecting to the local water authority's main water line, including any required hot tap or tee
3. Furnishing and installing an extension pipe from the main water line to the water meter
4. Sterilizing the extension pipe

Make arrangements and pay the charges for the installation of the water meters.
If a charge is changed at the time of installation, the Department adjusts the lump sum price based on the difference between the specified charges and the changed charges.

Replace section 5-1.20F with:

05-30-14

5-1.20F Irrigation Water Service Charges

Reserved

Add between the 2nd and 3rd paragraphs of section 5-1.23A:

10-19-12

Submit action and informational submittals to the Engineer.

Add between the 5th and 6th paragraphs of section 5-1.23B(1):

07-19-13

For a revised submittal, allow the same number of days for review as for the original submittal.

07-19-13

Delete the 1st sentence in the 10th paragraph of section 5-1.23B(2).

Add to the list in the 1st paragraph of section 5-1.36A:

07-19-13

10. Survey monuments

Add to section 5-1.36C:

07-20-12

If the Contract does not include an agreement with a railroad company, do not allow personnel or equipment on railroad property.
Prevent material, equipment, and debris from falling onto railroad property.

DocuSign Envelope ID: 894511EA-295B-49EB-A393-D26A6837FDD4

Add to section 5-1.36:

07-19-13

5-1.36E Survey Monuments

Protect survey monuments on and off the highway. Upon discovery of a survey monument not identified and located immediately:

1. Stop work near the monument
2. Notify the Engineer

Do not resume work near the monument until authorized.

Add between the 1st and 2nd paragraphs of section 5-1.37A:

10-19-12

Do not remove any padlock used to secure a portion of the work until the Engineer is present to replace it. Notify the Engineer at least 3 days before removing the lock.

Replace the 1st sentence of the 1st paragraph of section 5-1.39C(2) with:

10-19-12

Section 5-1.39C(2) applies if a plant establishment period of 3 years or more is shown on the *Notice to Bidders*.

Replace "working days" in the 1st paragraph of section 5-1.43E(1)(a) with:

10-19-12

original working days

^^

6 CONTROL OF MATERIALS

07-19-13

Replace section 6-2.05C with:

04-19-13

6-2.05C Steel and Iron Materials

Steel and iron materials must be melted and manufactured in the United States except:

1. Foreign pig iron and processed, pelletized, and reduced iron ore may be used in the domestic production of the steel and iron materials
2. If the total combined cost of the materials does not exceed the greater of 0.1 percent of the total bid or $2,500, materials produced outside the United States may be used if authorized

Furnish steel and iron materials to be incorporated into the work with certificates of compliance and certified mill test reports. Mill test reports must indicate where the steel and iron were melted and manufactured.

All melting and manufacturing processes for these materials, including an application of a coating, must occur in the United States. Coating includes all processes that protect or enhance the value of the material to which the coating is applied.

Replace "Precast concrete members specified section 11-2" in the table in section 6-3.05B with:

07-19-13

Precast concrete members specified as tier 1 or tier 2 in section 90-4.01D(1)

DocuSign Envelope ID: 894511EA-295B-49EB-A393-D26A6837FDD4

^^

7 LEGAL RELATIONS AND RESPONSIBILITY TO THE PUBLIC

05-30-14

Replace "$50" in the 1st sentence in the 6th paragraph of section 7-1.02K(2) with:

07-19-13

$200

Replace "$25" in the 2nd sentence in the 13th paragraph of section 7-1.02K(3) with:

07-19-13

$100

05-30-14

Delete "water or" in the 9th paragraph of section 7-1.03.

Replace "20 days" in the 14th paragraph of section 7-1.04 with:

09-16-11

25 days

Replace "90 days" in the 14th paragraph of section 7-1.04 with:

09-16-11

125 days

Add between the 18th and 19th paragraphs of section 7-1.04:

09-16-11

Temporary facilities that could be a hazard to public safety if improperly designed must comply with design requirements described in the Contract for those facilities or, if none are described, with standard design criteria or codes appropriate for the facility involved. Submit shop drawings and design calculations for the temporary facilities and show the standard design criteria or codes used. Shop drawings and supplemental calculations must be sealed and signed by an engineer who is registered as a civil engineer in the State.

Replace the 2nd paragraph of section 7-1.11A with:

07-27-12

A copy of form FHWA-1273 is included in section 7-1.11B. The training and promotion section of section II refers to training provisions as if they were included in the special provisions. The Department specifies the provisions in section 7-1.11D of the *Standard Specifications*. If a number of trainees or apprentices is required, the Department shows the number on the *Notice to Bidders*. Interpret each FHWA-1273 clause shown in the following table as having the same meaning as the corresponding Department clause:

DocuSign Envelope ID: 894511EA-295B-49EB-A393-D26A6837FDD4

FHWA-1273 Nondiscrimination Clauses

FHWA-1273 section	FHWA-1273 clause	Department clause
Training and Promotion	In the event a special provision for training is provided under this contract, this subparagraph will be superseded as indicated in the special provision.	If section 7-1.11D applies, section 7-1.11D supersedes this subparagraph.
Records and Reports	If on-the-job training is being required by special provision, the contractor will be required to collect and report training data.	If the Contract requires on-the-job training, collect and report training data.

Replace the form in section 7-1.11B with:

07-20-12

DocuSign Envelope ID: 894511EA-295B-49EB-A393-D26A6837FDD4

FHWA-1273 -- Revised May 1, 2012

REQUIRED CONTRACT PROVISIONS
FEDERAL-AID CONSTRUCTION CONTRACTS

I. General
II. Nondiscrimination
III. Nonsegregated Facilities
IV. Davis-Bacon and Related Act Provisions
V. Contract Work Hours and Safety Standards Act Provisions
VI. Subletting or Assigning the Contract
VII. Safety: Accident Prevention
VIII. False Statements Concerning Highway Projects
IX. Implementation of Clean Air Act and Federal Water Pollution Control Act
X. Compliance with Governmentwide Suspension and Debarment Requirements
XI. Certification Regarding Use of Contract Funds for Lobbying

ATTACHMENTS

A. Employment and Materials Preference for Appalachian Development Highway System or Appalachian Local Access Road Contracts (included in Appalachian contracts only)

I. GENERAL

1. Form FHWA-1273 must be physically incorporated in each construction contract funded under Title 23 (excluding emergency contracts solely intended for debris removal). The contractor (or subcontractor) must insert this form in each subcontract and further require its inclusion in all lower tier subcontracts (excluding purchase orders, rental agreements and other agreements for supplies or services).

The applicable requirements of Form FHWA-1273 are incorporated by reference for work done under any purchase order, rental agreement or agreement for other services. The prime contractor shall be responsible for compliance by any subcontractor, lower-tier subcontractor or service provider.

Form FHWA-1273 must be included in all Federal-aid design-build contracts, in all subcontracts and in lower tier subcontracts (excluding subcontracts for design services, purchase orders, rental agreements and other agreements for supplies or services). The design-builder shall be responsible for compliance by any subcontractor, lower-tier subcontractor or service provider.

Contracting agencies may reference Form FHWA-1273 in bid proposal or request for proposal documents, however, the Form FHWA-1273 must be physically incorporated (not referenced) in all contracts, subcontracts and lower-tier subcontracts (excluding purchase orders, rental agreements and other agreements for supplies or services related to a construction contract).

2. Subject to the applicability criteria noted in the following sections, these contract provisions shall apply to all work performed on the contract by the contractor's own organization and with the assistance of workers under the contractor's immediate superintendence and to all work performed on the contract by piecework, station work, or by subcontract.

3. A breach of any of the stipulations contained in these Required Contract Provisions may be sufficient grounds for withholding of progress payments, withholding of final payment, termination of the contract, suspension / debarment or any other action determined to be appropriate by the contracting agency and FHWA.

4. Selection of Labor: During the performance of this contract, the contractor shall not use convict labor for any purpose within the limits of a construction project on a Federal-aid highway unless it is labor performed by convicts who are on parole, supervised release, or probation. The term Federal-aid highway does not include roadways functionally classified as local roads or rural minor collectors.

II. NONDISCRIMINATION

The provisions of this section related to 23 CFR Part 230 are applicable to all Federal-aid construction contracts and to all related construction subcontracts of $10,000 or more. The provisions of 23 CFR Part 230 are not applicable to material supply, engineering, or architectural service contracts.

In addition, the contractor and all subcontractors must comply with the following policies: Executive Order 11246, 41 CFR 60, 29 CFR 1625-1627, Title 23 USC Section 140, the Rehabilitation Act of 1973, as amended (29 USC 794), Title VI of the Civil Rights Act of 1964, as amended, and related regulations including 49 CFR Parts 21, 26 and 27; and 23 CFR Parts 200, 230, and 633.

The contractor and all subcontractors must comply with: the requirements of the Equal Opportunity Clause in 41 CFR 60-1.4(b) and, for all construction contracts exceeding $10,000, the Standard Federal Equal Employment Opportunity Construction Contract Specifications in 41 CFR 60-4.3.

Note: The U.S. Department of Labor has exclusive authority to determine compliance with Executive Order 11246 and the policies of the Secretary of Labor including 41 CFR 60, and 29 CFR 1625-1627. The contracting agency and the FHWA have the authority and the responsibility to ensure compliance with Title 23 USC Section 140, the Rehabilitation Act of 1973, as amended (29 USC 794), and Title VI of the Civil Rights Act of 1964, as amended, and related regulations including 49 CFR Parts 21, 26 and 27; and 23 CFR Parts 200, 230, and 633.

The following provision is adopted from 23 CFR 230, Appendix A, with appropriate revisions to conform to the U.S. Department of Labor (US DOL) and FHWA requirements.

1. Equal Employment Opportunity: Equal employment opportunity (EEO) requirements not to discriminate and to take affirmative action to assure equal opportunity as set forth under laws, executive orders, rules, regulations (28 CFR 35, 29 CFR 1630, 29 CFR 1625-1627, 41 CFR 60 and 49 CFR 27) and orders of the Secretary of Labor as modified by the provisions prescribed herein, and imposed pursuant to 23 U.S.C. 140 shall constitute the EEO and specific affirmative action standards for the contractor's project activities under

DocuSign Envelope ID: 894511EA-295B-49EB-A393-D26A6837FDD4

this contract. The provisions of the Americans with Disabilities Act of 1990 (42 U.S.C. 12101 et seq.) set forth under 28 CFR 35 and 29 CFR 1630 are incorporated by reference in this contract. In the execution of this contract, the contractor agrees to comply with the following minimum specific requirement activities of EEO:

a. The contractor will work with the contracting agency and the Federal Government to ensure that it has made every good faith effort to provide equal opportunity with respect to all of its terms and conditions of employment and in their review of activities under the contract.

b. The contractor will accept as its operating policy the following statement:

"It is the policy of this Company to assure that applicants are employed, and that employees are treated during employment, without regard to their race, religion, sex, color, national origin, age or disability. Such action shall include: employment, upgrading, demotion, or transfer; recruitment or recruitment advertising; layoff or termination; rates of pay or other forms of compensation; and selection for training, including apprenticeship, pre-apprenticeship, and/or on-the-job training."

2. EEO Officer: The contractor will designate and make known to the contracting officers an EEO Officer who will have the responsibility for and must be capable of effectively administering and promoting an active EEO program and who must be assigned adequate authority and responsibility to do so.

3. Dissemination of Policy: All members of the contractor's staff who are authorized to hire, supervise, promote, and discharge employees, or who recommend such action, or who are substantially involved in such action, will be made fully cognizant of, and will implement, the contractor's EEO policy and contractual responsibilities to provide EEO in each grade and classification of employment. To ensure that the above agreement will be met, the following actions will be taken as a minimum:

a. Periodic meetings of supervisory and personnel office employees will be conducted before the start of work and then not less often than once every six months, at which time the contractor's EEO policy and its implementation will be reviewed and explained. The meetings will be conducted by the EEO Officer.

b. All new supervisory or personnel office employees will be given a thorough indoctrination by the EEO Officer, covering all major aspects of the contractor's EEO obligations within thirty days following their reporting for duty with the contractor.

c. All personnel who are engaged in direct recruitment for the project will be instructed by the EEO Officer in the contractor's procedures for locating and hiring minorities and women.

d. Notices and posters setting forth the contractor's EEO policy will be placed in areas readily accessible to employees, applicants for employment and potential employees.

e. The contractor's EEO policy and the procedures to implement such policy will be brought to the attention of employees by means of meetings, employee handbooks, or other appropriate means.

4. Recruitment: When advertising for employees, the contractor will include in all advertisements for employees the notation: "An Equal Opportunity Employer." All such advertisements will be placed in publications having a large circulation among minorities and women in the area from which the project work force would normally be derived.

a. The contractor will, unless precluded by a valid bargaining agreement, conduct systematic and direct recruitment through public and private employee referral sources likely to yield qualified minorities and women. To meet this requirement, the contractor will identify sources of potential minority group employees, and establish with such identified sources procedures whereby minority and women applicants may be referred to the contractor for employment consideration.

b. In the event the contractor has a valid bargaining agreement providing for exclusive hiring hall referrals, the contractor is expected to observe the provisions of that agreement to the extent that the system meets the contractor's compliance with EEO contract provisions. Where implementation of such an agreement has the effect of discriminating against minorities or women, or obligates the contractor to do the same, such implementation violates Federal nondiscrimination provisions.

c. The contractor will encourage its present employees to refer minorities and women as applicants for employment. Information and procedures with regard to referring such applicants will be discussed with employees.

5. Personnel Actions: Wages, working conditions, and employee benefits shall be established and administered, and personnel actions of every type, including hiring, upgrading, promotion, transfer, demotion, layoff, and termination, shall be taken without regard to race, color, religion, sex, national origin, age or disability. The following procedures shall be followed:

a. The contractor will conduct periodic inspections of project sites to insure that working conditions and employee facilities do not indicate discriminatory treatment of project site personnel.

b. The contractor will periodically evaluate the spread of wages paid within each classification to determine any evidence of discriminatory wage practices.

c. The contractor will periodically review selected personnel actions in depth to determine whether there is evidence of discrimination. Where evidence is found, the contractor will promptly take corrective action. If the review indicates that the discrimination may extend beyond the actions reviewed, such corrective action shall include all affected persons.

d. The contractor will promptly investigate all complaints of alleged discrimination made to the contractor in connection with its obligations under this contract, will attempt to resolve such complaints, and will take appropriate corrective action within a reasonable time. If the investigation indicates that the discrimination may affect persons other than the complainant, such corrective action shall include such other persons. Upon completion of each investigation, the contractor will inform every complainant of all of their avenues of appeal.

6. Training and Promotion:

a. The contractor will assist in locating, qualifying, and increasing the skills of minorities and women who are

DocuSign Envelope ID: 894511EA-295B-49EB-A393-D26A6837FDD4

applicants for employment or current employees. Such efforts should be aimed at developing full journey level status employees in the type of trade or job classification involved.

b. Consistent with the contractor's work force requirements and as permissible under Federal and State regulations, the contractor shall make full use of training programs, i.e., apprenticeship, and on-the-job training programs for the geographical area of contract performance. In the event a special provision for training is provided under this contract, this subparagraph will be superseded as indicated in the special provision. The contracting agency may reserve training positions for persons who receive welfare assistance in accordance with 23 U.S.C. 140(a).

c. The contractor will advise employees and applicants for employment of available training programs and entrance requirements for each.

d. The contractor will periodically review the training and promotion potential of employees who are minorities and women and will encourage eligible employees to apply for such training and promotion.

7. Unions: If the contractor relies in whole or in part upon unions as a source of employees, the contractor will use good faith efforts to obtain the cooperation of such unions to increase opportunities for minorities and women. Actions by the contractor, either directly or through a contractor's association acting as agent, will include the procedures set forth below:

a. The contractor will use good faith efforts to develop, in cooperation with the unions, joint training programs aimed toward qualifying more minorities and women for membership in the unions and increasing the skills of minorities and women so that they may qualify for higher paying employment.

b. The contractor will use good faith efforts to incorporate an EEO clause into each union agreement to the end that such union will be contractually bound to refer applicants without regard to their race, color, religion, sex, national origin, age or disability.

c. The contractor is to obtain information as to the referral practices and policies of the labor union except that to the extent such information is within the exclusive possession of the labor union and such labor union refuses to furnish such information to the contractor, the contractor shall so certify to the contracting agency and shall set forth what efforts have been made to obtain such information.

d. In the event the union is unable to provide the contractor with a reasonable flow of referrals within the time limit set forth in the collective bargaining agreement, the contractor will, through independent recruitment efforts, fill the employment vacancies without regard to race, color, religion, sex, national origin, age or disability; making full efforts to obtain qualified and/or qualifiable minorities and women. The failure of a union to provide sufficient referrals (even though it is obligated to provide exclusive referrals under the terms of a collective bargaining agreement) does not relieve the contractor from the requirements of this paragraph. In the event the union referral practice prevents the contractor from meeting the obligations pursuant to Executive Order 11246, as amended, and these special provisions, such contractor shall immediately notify the contracting agency.

8. Reasonable Accommodation for Applicants / Employees with Disabilities: The contractor must be familiar with the requirements for and comply with the Americans with Disabilities Act and all rules and regulations established there under. Employers must provide reasonable accommodation in all employment activities unless to do so would cause an undue hardship.

9. Selection of Subcontractors, Procurement of Materials and Leasing of Equipment: The contractor shall not discriminate on the grounds of race, color, religion, sex, national origin, age or disability in the selection and retention of subcontractors, including procurement of materials and leases of equipment. The contractor shall take all necessary and reasonable steps to ensure nondiscrimination in the administration of this contract.

a. The contractor shall notify all potential subcontractors and suppliers and lessors of their EEO obligations under this contract.

b. The contractor will use good faith efforts to ensure subcontractor compliance with their EEO obligations.

10. Assurance Required by 49 CFR 26.13(b):

a. The requirements of 49 CFR Part 26 and the State DOT's U.S. DOT-approved DBE program are incorporated by reference.

b. The contractor or subcontractor shall not discriminate on the basis of race, color, national origin, or sex in the performance of this contract. The contractor shall carry out applicable requirements of 49 CFR Part 26 in the award and administration of DOT-assisted contracts. Failure by the contractor to carry out these requirements is a material breach of this contract, which may result in the termination of this contract or such other remedy as the contracting agency deems appropriate.

11. Records and Reports: The contractor shall keep such records as necessary to document compliance with the EEO requirements. Such records shall be retained for a period of three years following the date of the final payment to the contractor for all contract work and shall be available at reasonable times and places for inspection by authorized representatives of the contracting agency and the FHWA.

a. The records kept by the contractor shall document the following:

(1) The number and work hours of minority and non-minority group members and women employed in each work classification on the project;

(2) The progress and efforts being made in cooperation with unions, when applicable, to increase employment opportunities for minorities and women; and

(3) The progress and efforts being made in locating, hiring, training, qualifying, and upgrading minorities and women;

b. The contractors and subcontractors will submit an annual report to the contracting agency each July for the duration of the project, indicating the number of minority, women, and non-minority group employees currently engaged in each work classification required by the contract work. This information is to be reported on Form FHWA-1391. The staffing data should represent the project work force on board in all or any part of the last payroll period preceding the end of July. If on-the-job training is being required by special provision, the contractor

DocuSign Envelope ID: 894511EA-295B-49EB-A393-D26A6837FDD4

will be required to collect and report training data. The employment data should reflect the work force on board during all or any part of the last payroll period preceding the end of July.

III. NONSEGREGATED FACILITIES

This provision is applicable to all Federal-aid construction contracts and to all related construction subcontracts of $10,000 or more.

The contractor must ensure that facilities provided for employees are provided in such a manner that segregation on the basis of race, color, religion, sex, or national origin cannot result. The contractor may neither require such segregated use by written or oral policies nor tolerate such use by employee custom. The contractor's obligation extends further to ensure that its employees are not assigned to perform their services at any location, under the contractor's control, where the facilities are segregated. The term "facilities" includes waiting rooms, work areas, restaurants and other eating areas, time clocks, restrooms, washrooms, locker rooms, and other storage or dressing areas, parking lots, drinking fountains, recreation or entertainment areas, transportation, and housing provided for employees. The contractor shall provide separate or single-user restrooms and necessary dressing or sleeping areas to assure privacy between sexes.

IV. DAVIS-BACON AND RELATED ACT PROVISIONS

This section is applicable to all Federal-aid construction projects exceeding $2,000 and to all related subcontracts and lower-tier subcontracts (regardless of subcontract size). The requirements apply to all projects located within the right-of-way of a roadway that is functionally classified as Federal-aid highway. This excludes roadways functionally classified as local roads or rural minor collectors, which are exempt. Contracting agencies may elect to apply these requirements to other projects.

The following provisions are from the U.S. Department of Labor regulations in 29 CFR 5.5 "Contract provisions and related matters" with minor revisions to conform to the FHWA-1273 format and FHWA program requirements.

1. Minimum wages

a. All laborers and mechanics employed or working upon the site of the work, will be paid unconditionally and not less often than once a week, and without subsequent deduction or rebate on any account (except such payroll deductions as are permitted by regulations issued by the Secretary of Labor under the Copeland Act (29 CFR part 3)), the full amount of wages and bona fide fringe benefits (or cash equivalents thereof) due at time of payment computed at rates not less than those contained in the wage determination of the Secretary of Labor which is attached hereto and made a part hereof, regardless of any contractual relationship which may be alleged to exist between the contractor and such laborers and mechanics.

Contributions made or costs reasonably anticipated for bona fide fringe benefits under section 1(b)(2) of the Davis-Bacon Act on behalf of laborers or mechanics are considered wages paid to such laborers or mechanics, subject to the provisions of paragraph 1.d. of this section; also, regular contributions made or costs incurred for more than a weekly period (but not less often than quarterly) under plans, funds, or programs which cover the particular weekly period, are deemed to be constructively made or incurred during such weekly period. Such laborers and mechanics shall be paid the appropriate wage rate and fringe benefits on the wage determination for the classification of work actually performed, without regard to skill, except as provided in 29 CFR 5.5(a)(4). Laborers or mechanics performing work in more than one classification may be compensated at the rate specified for each classification for the time actually worked therein: Provided, That the employer's payroll records accurately set forth the time spent in each classification in which work is performed. The wage determination (including any additional classification and wage rates conformed under paragraph 1.b. of this section) and the Davis-Bacon poster (WH–1321) shall be posted at all times by the contractor and its subcontractors at the site of the work in a prominent and accessible place where it can be easily seen by the workers.

b.(1) The contracting officer shall require that any class of laborers or mechanics, including helpers, which is not listed in the wage determination and which is to be employed under the contract shall be classified in conformance with the wage determination. The contracting officer shall approve an additional classification and wage rate and fringe benefits therefore only when the following criteria have been met:

(i) The work to be performed by the classification requested is not performed by a classification in the wage determination; and

(ii) The classification is utilized in the area by the construction industry; and

(iii) The proposed wage rate, including any bona fide fringe benefits, bears a reasonable relationship to the wage rates contained in the wage determination.

(2) If the contractor and the laborers and mechanics to be employed in the classification (if known), or their representatives, and the contracting officer agree on the classification and wage rate (including the amount designated for fringe benefits where appropriate), a report of the action taken shall be sent by the contracting officer to the Administrator of the Wage and Hour Division, Employment Standards Administration, U.S. Department of Labor, Washington, DC 20210. The Administrator, or an authorized representative, will approve, modify, or disapprove every additional classification action within 30 days of receipt and so advise the contracting officer or will notify the contracting officer within the 30-day period that additional time is necessary.

(3) In the event the contractor, the laborers or mechanics to be employed in the classification or their representatives, and the contracting officer do not agree on the proposed classification and wage rate (including the amount designated for fringe benefits, where appropriate), the contracting officer shall refer the questions, including the views of all interested parties and the recommendation of the contracting officer, to the Wage and Hour Administrator for determination. The Wage and Hour Administrator, or an authorized representative, will issue a determination within 30 days of receipt and so advise the contracting officer or

DocuSign Envelope ID: 894511EA-295B-49EB-A393-D26A6837FDD4

will notify the contracting officer within the 30-day period that additional time is necessary.

(4) The wage rate (including fringe benefits where appropriate) determined pursuant to paragraphs 1.b.(2) or 1.b.(3) of this section, shall be paid to all workers performing work in the classification under this contract from the first day on which work is performed in the classification.

c. Whenever the minimum wage rate prescribed in the contract for a class of laborers or mechanics includes a fringe benefit which is not expressed as an hourly rate, the contractor shall either pay the benefit as stated in the wage determination or shall pay another bona fide fringe benefit or an hourly cash equivalent thereof.

d. If the contractor does not make payments to a trustee or other third person, the contractor may consider as part of the wages of any laborer or mechanic the amount of any costs reasonably anticipated in providing bona fide fringe benefits under a plan or program, Provided, That the Secretary of Labor has found, upon the written request of the contractor, that the applicable standards of the Davis-Bacon Act have been met. The Secretary of Labor may require the contractor to set aside in a separate account assets for the meeting of obligations under the plan or program.

2. Withholding

The contracting agency shall upon its own action or upon written request of an authorized representative of the Department of Labor, withhold or cause to be withheld from the contractor under this contract, or any other Federal contract with the same prime contractor, or any other federally-assisted contract subject to Davis-Bacon prevailing wage requirements, which is held by the same prime contractor, so much of the accrued payments or advances as may be considered necessary to pay laborers and mechanics, including apprentices, trainees, and helpers, employed by the contractor or any subcontractor the full amount of wages required by the contract. In the event of failure to pay any laborer or mechanic, including any apprentice, trainee, or helper, employed or working on the site of the work, all or part of the wages required by the contract, the contracting agency may, after written notice to the contractor, take such action as may be necessary to cause the suspension of any further payment, advance, or guarantee of funds until such violations have ceased.

3. Payrolls and basic records

a. Payrolls and basic records relating thereto shall be maintained by the contractor during the course of the work and preserved for a period of three years thereafter for all laborers and mechanics working at the site of the work. Such records shall contain the name, address, and social security number of each such worker, his or her correct classification, hourly rates of wages paid (including rates of contributions or costs anticipated for bona fide fringe benefits or cash equivalents thereof of the types described in section 1(b)(2)(B) of the Davis-Bacon Act), daily and weekly number of hours worked, deductions made and actual wages paid. Whenever the Secretary of Labor has found under 29 CFR 5.5(a)(1)(iv) that the wages of any laborer or mechanic include the amount of any costs reasonably anticipated in providing benefits under a plan or program described in section 1(b)(2)(B) of the Davis-Bacon Act, the contractor shall maintain records which show that the commitment to provide such benefits is enforceable, that the plan or program is financially responsible, and that the plan or program has been communicated in writing to the laborers or mechanics affected, and records which show the costs anticipated or the actual cost incurred in providing such benefits. Contractors employing apprentices or trainees under approved programs shall maintain written evidence of the registration of apprenticeship programs and certification of trainee programs, the registration of the apprentices and trainees, and the ratios and wage rates prescribed in the applicable programs.

b.(1) The contractor shall submit weekly for each week in which any contract work is performed a copy of all payrolls to the contracting agency. The payrolls submitted shall set out accurately and completely all of the information required to be maintained under 29 CFR 5.5(a)(3)(i), except that full social security numbers and home addresses shall not be included on weekly transmittals. Instead the payrolls shall only need to include an individually identifying number for each employee (e.g. , the last four digits of the employee's social security number). The required weekly payroll information may be submitted in any form desired. Optional Form WH–347 is available for this purpose from the Wage and Hour Division Web site at http://www.dol.gov/esa/whd/forms/wh347instr.htm or its successor site. The prime contractor is responsible for the submission of copies of payrolls by all subcontractors. Contractors and subcontractors shall maintain the full social security number and current address of each covered worker, and shall provide them upon request to the contracting agency for transmission to the State DOT, the FHWA or the Wage and Hour Division of the Department of Labor for purposes of an investigation or audit of compliance with prevailing wage requirements. It is not a violation of this section for a prime contractor to require a subcontractor to provide addresses and social security numbers to the prime contractor for its own records, without weekly submission to the contracting agency..

(2) Each payroll submitted shall be accompanied by a "Statement of Compliance," signed by the contractor or subcontractor or his or her agent who pays or supervises the payment of the persons employed under the contract and shall certify the following:

(i) That the payroll for the payroll period contains the information required to be provided under §5.5 (a)(3)(ii) of Regulations, 29 CFR part 5, the appropriate information is being maintained under §5.5 (a)(3)(i) of Regulations, 29 CFR part 5, and that such information is correct and complete;

(ii) That each laborer or mechanic (including each helper, apprentice, and trainee) employed on the contract during the payroll period has been paid the full weekly wages earned, without rebate, either directly or indirectly, and that no deductions have been made either directly or indirectly from the full wages earned, other than permissible deductions as set forth in Regulations, 29 CFR part 3;

(iii) That each laborer or mechanic has been paid not less than the applicable wage rates and fringe benefits or cash equivalents for the classification of work performed, as specified in the applicable wage determination incorporated into the contract.

DocuSign Envelope ID: 894511EA-295B-49EB-A393-D26A6837FDD4

(3) The weekly submission of a properly executed certification set forth on the reverse side of Optional Form WH–347 shall satisfy the requirement for submission of the "Statement of Compliance" required by paragraph 3.b.(2) of this section.

(4) The falsification of any of the above certifications may subject the contractor or subcontractor to civil or criminal prosecution under section 1001 of title 18 and section 231 of title 31 of the United States Code.

c. The contractor or subcontractor shall make the records required under paragraph 3.a. of this section available for inspection, copying, or transcription by authorized representatives of the contracting agency, the State DOT, the FHWA, or the Department of Labor, and shall permit such representatives to interview employees during working hours on the job. If the contractor or subcontractor fails to submit the required records or to make them available, the FHWA may, after written notice to the contractor, the contracting agency or the State DOT, take such action as may be necessary to cause the suspension of any further payment, advance, or guarantee of funds. Furthermore, failure to submit the required records upon request or to make such records available may be grounds for debarment action pursuant to 29 CFR 5.12.

4. Apprentices and trainees

a. Apprentices (programs of the USDOL).

Apprentices will be permitted to work at less than the predetermined rate for the work they performed when they are employed pursuant to and individually registered in a bona fide apprenticeship program registered with the U.S. Department of Labor, Employment and Training Administration, Office of Apprenticeship Training, Employer and Labor Services, or with a State Apprenticeship Agency recognized by the Office, or if a person is employed in his or her first 90 days of probationary employment as an apprentice in such an apprenticeship program, who is not individually registered in the program, but who has been certified by the Office of Apprenticeship Training, Employer and Labor Services or a State Apprenticeship Agency (where appropriate) to be eligible for probationary employment as an apprentice.

The allowable ratio of apprentices to journeymen on the job site in any craft classification shall not be greater than the ratio permitted to the contractor as to the entire work force under the registered program. Any worker listed on a payroll at an apprentice wage rate, who is not registered or otherwise employed as stated above, shall be paid not less than the applicable wage rate on the wage determination for the classification of work actually performed. In addition, any apprentice performing work on the job site in excess of the ratio permitted under the registered program shall be paid not less than the applicable wage rate on the wage determination for the work actually performed. Where a contractor is performing construction on a project in a locality other than that in which its program is registered, the ratios and wage rates (expressed in percentages of the journeyman's hourly rate) specified in the contractor's or subcontractor's registered program shall be observed.

Every apprentice must be paid at not less than the rate specified in the registered program for the apprentice's level of progress, expressed as a percentage of the journeymen hourly rate specified in the applicable wage determination. Apprentices shall be paid fringe benefits in accordance with the provisions of the apprenticeship program. If the apprenticeship program does not specify fringe benefits, apprentices must be paid the full amount of fringe benefits listed on the wage determination for the applicable classification. If the Administrator determines that a different practice prevails for the applicable apprentice classification, fringes shall be paid in accordance with that determination.

In the event the Office of Apprenticeship Training, Employer and Labor Services, or a State Apprenticeship Agency recognized by the Office, withdraws approval of an apprenticeship program, the contractor will no longer be permitted to utilize apprentices at less than the applicable predetermined rate for the work performed until an acceptable program is approved.

b. Trainees (programs of the USDOL).

Except as provided in 29 CFR 5.16, trainees will not be permitted to work at less than the predetermined rate for the work performed unless they are employed pursuant to and individually registered in a program which has received prior approval, evidenced by formal certification by the U.S. Department of Labor, Employment and Training Administration.

The ratio of trainees to journeymen on the job site shall not be greater than permitted under the plan approved by the Employment and Training Administration.

Every trainee must be paid at not less than the rate specified in the approved program for the trainee's level of progress, expressed as a percentage of the journeyman hourly rate specified in the applicable wage determination. Trainees shall be paid fringe benefits in accordance with the provisions of the trainee program. If the trainee program does not mention fringe benefits, trainees shall be paid the full amount of fringe benefits listed on the wage determination unless the Administrator of the Wage and Hour Division determines that there is an apprenticeship program associated with the corresponding journeyman wage rate on the wage determination which provides for less than full fringe benefits for apprentices. Any employee listed on the payroll at a trainee rate who is not registered and participating in a training plan approved by the Employment and Training Administration shall be paid not less than the applicable wage rate on the wage determination for the classification of work actually performed. In addition, any trainee performing work on the job site in excess of the ratio permitted under the registered program shall be paid not less than the applicable wage rate on the wage determination for the work actually performed.

In the event the Employment and Training Administration withdraws approval of a training program, the contractor will no longer be permitted to utilize trainees at less than the applicable predetermined rate for the work performed until an acceptable program is approved.

c. Equal employment opportunity. The utilization of apprentices, trainees and journeymen under this part shall be in conformity with the equal employment opportunity requirements of Executive Order 11246, as amended, and 29 CFR part 30.

DocuSign Envelope ID: 894511EA-295B-49EB-A393-D26A6837FDD4

d. Apprentices and Trainees (programs of the U.S. DOT).

Apprentices and trainees working under apprenticeship and skill training programs which have been certified by the Secretary of Transportation as promoting EEO in connection with Federal-aid highway construction programs are not subject to the requirements of paragraph 4 of this Section IV. The straight time hourly wage rates for apprentices and trainees under such programs will be established by the particular programs. The ratio of apprentices and trainees to journeymen shall not be greater than permitted by the terms of the particular program.

5. Compliance with Copeland Act requirements. The contractor shall comply with the requirements of 29 CFR part 3, which are incorporated by reference in this contract.

6. Subcontracts. The contractor or subcontractor shall insert Form FHWA-1273 in any subcontracts and also require the subcontractors to include Form FHWA-1273 in any lower tier subcontracts. The prime contractor shall be responsible for the compliance by any subcontractor or lower tier subcontractor with all the contract clauses in 29 CFR 5.5.

7. Contract termination: debarment. A breach of the contract clauses in 29 CFR 5.5 may be grounds for termination of the contract, and for debarment as a contractor and a subcontractor as provided in 29 CFR 5.12.

8. Compliance with Davis-Bacon and Related Act requirements. All rulings and interpretations of the Davis-Bacon and Related Acts contained in 29 CFR parts 1, 3, and 5 are herein incorporated by reference in this contract.

9. Disputes concerning labor standards. Disputes arising out of the labor standards provisions of this contract shall not be subject to the general disputes clause of this contract. Such disputes shall be resolved in accordance with the procedures of the Department of Labor set forth in 29 CFR parts 5, 6, and 7. Disputes within the meaning of this clause include disputes between the contractor (or any of its subcontractors) and the contracting agency, the U.S. Department of Labor, or the employees or their representatives.

10. Certification of eligibility.

a. By entering into this contract, the contractor certifies that neither it (nor he or she) nor any person or firm who has an interest in the contractor's firm is a person or firm ineligible to be awarded Government contracts by virtue of section 3(a) of the Davis-Bacon Act or 29 CFR 5.12(a)(1).

b. No part of this contract shall be subcontracted to any person or firm ineligible for award of a Government contract by virtue of section 3(a) of the Davis-Bacon Act or 29 CFR 5.12(a)(1).

c. The penalty for making false statements is prescribed in the U.S. Criminal Code, 18 U.S.C. 1001.

V. CONTRACT WORK HOURS AND SAFETY STANDARDS ACT

The following clauses apply to any Federal-aid construction contract in an amount in excess of $100,000 and subject to the overtime provisions of the Contract Work Hours and Safety Standards Act. These clauses shall be inserted in addition to the clauses required by 29 CFR 5.5(a) or 29 CFR 4.6. As used in this paragraph, the terms laborers and mechanics include watchmen and guards.

1. Overtime requirements. No contractor or subcontractor contracting for any part of the contract work which may require or involve the employment of laborers or mechanics shall require or permit any such laborer or mechanic in any workweek in which he or she is employed on such work to work in excess of forty hours in such workweek unless such laborer or mechanic receives compensation at a rate not less than one and one-half times the basic rate of pay for all hours worked in excess of forty hours in such workweek.

2. Violation; liability for unpaid wages; liquidated damages. In the event of any violation of the clause set forth in paragraph (1.) of this section, the contractor and any subcontractor responsible therefor shall be liable for the unpaid wages. In addition, such contractor and subcontractor shall be liable to the United States (in the case of work done under contract for the District of Columbia or a territory, to such District or to such territory), for liquidated damages. Such liquidated damages shall be computed with respect to each individual laborer or mechanic, including watchmen and guards, employed in violation of the clause set forth in paragraph (1.) of this section, in the sum of $10 for each calendar day on which such individual was required or permitted to work in excess of the standard workweek of forty hours without payment of the overtime wages required by the clause set forth in paragraph (1.) of this section.

3. Withholding for unpaid wages and liquidated damages. The FHWA or the contacting agency shall upon its own action or upon written request of an authorized representative of the Department of Labor withhold or cause to be withheld, from any moneys payable on account of work performed by the contractor or subcontractor under any such contract or any other Federal contract with the same prime contractor, or any other federally-assisted contract subject to the Contract Work Hours and Safety Standards Act, which is held by the same prime contractor, such sums as may be determined to be necessary to satisfy any liabilities of such contractor or subcontractor for unpaid wages and liquidated damages as provided in the clause set forth in paragraph (2.) of this section.

4. Subcontracts. The contractor or subcontractor shall insert in any subcontracts the clauses set forth in paragraph (1.) through (4.) of this section and also a clause requiring the subcontractors to include these clauses in any lower tier subcontracts. The prime contractor shall be responsible for compliance by any subcontractor or lower tier subcontractor with the clauses set forth in paragraphs (1.) through (4.) of this section.

DocuSign Envelope ID: 894511EA-295B-49EB-A393-D26A6837FDD4

VI. SUBLETTING OR ASSIGNING THE CONTRACT

This provision is applicable to all Federal-aid construction contracts on the National Highway System.

1. The contractor shall perform with its own organization contract work amounting to not less than 30 percent (or a greater percentage if specified elsewhere in the contract) of the total original contract price, excluding any specialty items designated by the contracting agency. Specialty items may be performed by subcontract and the amount of any such specialty items performed may be deducted from the total original contract price before computing the amount of work required to be performed by the contractor's own organization (23 CFR 635.116).

a. The term "perform work with its own organization" refers to workers employed or leased by the prime contractor, and equipment owned or rented by the prime contractor, with or without operators. Such term does not include employees or equipment of a subcontractor or lower tier subcontractor, agents of the prime contractor, or any other assignees. The term may include payments for the costs of hiring leased employees from an employee leasing firm meeting all relevant Federal and State regulatory requirements. Leased employees may only be included in this term if the prime contractor meets all of the following conditions:

(1) the prime contractor maintains control over the supervision of the day-to-day activities of the leased employees;
(2) the prime contractor remains responsible for the quality of the work of the leased employees;
(3) the prime contractor retains all power to accept or exclude individual employees from work on the project; and
(4) the prime contractor remains ultimately responsible for the payment of predetermined minimum wages, the submission of payrolls, statements of compliance and all other Federal regulatory requirements.

b. "Specialty Items" shall be construed to be limited to work that requires highly specialized knowledge, abilities, or equipment not ordinarily available in the type of contracting organizations qualified and expected to bid or propose on the contract as a whole and in general are to be limited to minor components of the overall contract.

2. The contract amount upon which the requirements set forth in paragraph (1) of Section VI is computed includes the cost of material and manufactured products which are to be purchased or produced by the contractor under the contract provisions.

3. The contractor shall furnish (a) a competent superintendent or supervisor who is employed by the firm, has full authority to direct performance of the work in accordance with the contract requirements, and is in charge of all construction operations (regardless of who performs the work) and (b) such other of its own organizational resources (supervision, management, and engineering services) as the contracting officer determines is necessary to assure the performance of the contract.

4. No portion of the contract shall be sublet, assigned or otherwise disposed of except with the written consent of the contracting officer, or authorized representative, and such consent when given shall not be construed to relieve the contractor of any responsibility for the fulfillment of the contract. Written consent will be given only after the contracting agency has assured that each subcontract is evidenced in writing and that it contains all pertinent provisions and requirements of the prime contract.

5. The 30% self-performance requirement of paragraph (1) is not applicable to design-build contracts; however, contracting agencies may establish their own self-performance requirements.

VII. SAFETY: ACCIDENT PREVENTION

This provision is applicable to all Federal-aid construction contracts and to all related subcontracts.

1. In the performance of this contract the contractor shall comply with all applicable Federal, State, and local laws governing safety, health, and sanitation (23 CFR 635). The contractor shall provide all safeguards, safety devices and protective equipment and take any other needed actions as it determines, or as the contracting officer may determine, to be reasonably necessary to protect the life and health of employees on the job and the safety of the public and to protect property in connection with the performance of the work covered by the contract.

2. It is a condition of this contract, and shall be made a condition of each subcontract, which the contractor enters into pursuant to this contract, that the contractor and any subcontractor shall not permit any employee, in performance of the contract, to work in surroundings or under conditions which are unsanitary, hazardous or dangerous to his/her health or safety, as determined under construction safety and health standards (29 CFR 1926) promulgated by the Secretary of Labor, in accordance with Section 107 of the Contract Work Hours and Safety Standards Act (40 U.S.C. 3704).

3. Pursuant to 29 CFR 1926.3, it is a condition of this contract that the Secretary of Labor or authorized representative thereof, shall have right of entry to any site of contract performance to inspect or investigate the matter of compliance with the construction safety and health standards and to carry out the duties of the Secretary under Section 107 of the Contract Work Hours and Safety Standards Act (40 U.S.C.3704).

VIII. FALSE STATEMENTS CONCERNING HIGHWAY PROJECTS

This provision is applicable to all Federal-aid construction contracts and to all related subcontracts.

In order to assure high quality and durable construction in conformity with approved plans and specifications and a high degree of reliability on statements and representations made by engineers, contractors, suppliers, and workers on Federal-aid highway projects, it is essential that all persons concerned with the project perform their functions as carefully, thoroughly, and honestly as possible. Willful falsification, distortion, or misrepresentation with respect to any facts related to the project is a violation of Federal law. To prevent any misunderstanding regarding the seriousness of these and similar acts, Form FHWA-1022 shall be posted on each Federal-aid highway project (23 CFR 635) in one or more places where it is readily available to all persons concerned with the project:

18 U.S.C. 1020 reads as follows:

DocuSign Envelope ID: 894511EA-295B-49EB-A393-D26A6837FDD4

"Whoever, being an officer, agent, or employee of the United States, or of any State or Territory, or whoever, whether a person, association, firm, or corporation, knowingly makes any false statement, false representation, or false report as to the character, quality, quantity, or cost of the material used or to be used, or the quantity or quality of the work performed or to be performed, or the cost thereof in connection with the submission of plans, maps, specifications, contracts, or costs of construction on any highway or related project submitted for approval to the Secretary of Transportation; or

Whoever knowingly makes any false statement, false representation, false report or false claim with respect to the character, quality, quantity, or cost of any work performed or to be performed, or materials furnished or to be furnished, in connection with the construction of any highway or related project approved by the Secretary of Transportation; or

Whoever knowingly makes any false statement or false representation as to material fact in any statement, certificate, or report submitted pursuant to provisions of the Federal-aid Roads Act approved July 1, 1916, (39 Stat. 355), as amended and supplemented;

Shall be fined under this title or imprisoned not more than 5 years or both."

IX. IMPLEMENTATION OF CLEAN AIR ACT AND FEDERAL WATER POLLUTION CONTROL ACT

This provision is applicable to all Federal-aid construction contracts and to all related subcontracts.

By submission of this bid/proposal or the execution of this contract, or subcontract, as appropriate, the bidder, proposer, Federal-aid construction contractor, or subcontractor, as appropriate, will be deemed to have stipulated as follows:

1. That any person who is or will be utilized in the performance of this contract is not prohibited from receiving an award due to a violation of Section 508 of the Clean Water Act or Section 306 of the Clean Air Act.
2. That the contractor agrees to include or cause to be included the requirements of paragraph (1) of this Section X in every subcontract, and further agrees to take such action as the contracting agency may direct as a means of enforcing such requirements.

X. CERTIFICATION REGARDING DEBARMENT, SUSPENSION, INELIGIBILITY AND VOLUNTARY EXCLUSION

This provision is applicable to all Federal-aid construction contracts, design-build contracts, subcontracts, lower-tier subcontracts, purchase orders, lease agreements, consultant contracts or any other covered transaction requiring FHWA approval or that is estimated to cost $25,000 or more – as defined in 2 CFR Parts 180 and 1200.

1. **Instructions for Certification – First Tier Participants:**

a. By signing and submitting this proposal, the prospective first tier participant is providing the certification set out below.

b. The inability of a person to provide the certification set out below will not necessarily result in denial of participation in this covered transaction. The prospective first tier participant shall submit an explanation of why it cannot provide the certification set out below. The certification or explanation will be considered in connection with the department or agency's determination whether to enter into this transaction. However, failure of the prospective first tier participant to furnish a certification or an explanation shall disqualify such a person from participation in this transaction.

c. The certification in this clause is a material representation of fact upon which reliance was placed when the contracting agency determined to enter into this transaction. If it is later determined that the prospective participant knowingly rendered an erroneous certification, in addition to other remedies available to the Federal Government, the contracting agency may terminate this transaction for cause of default.

d. The prospective first tier participant shall provide immediate written notice to the contracting agency to whom this proposal is submitted if any time the prospective first tier participant learns that its certification was erroneous when submitted or has become erroneous by reason of changed circumstances.

e. The terms "covered transaction," "debarred," "suspended," "ineligible," "participant," "person," "principal," and "voluntarily excluded," as used in this clause, are defined in 2 CFR Parts 180 and 1200. "First Tier Covered Transactions" refers to any covered transaction between a grantee or subgrantee of Federal funds and a participant (such as the prime or general contract). "Lower Tier Covered Transactions" refers to any covered transaction under a First Tier Covered Transaction (such as subcontracts). "First Tier Participant" refers to the participant who has entered into a covered transaction with a grantee or subgrantee of Federal funds (such as the prime or general contractor). "Lower Tier Participant" refers any participant who has entered into a covered transaction with a First Tier Participant or other Lower Tier Participants (such as subcontractors and suppliers).

f. The prospective first tier participant agrees by submitting this proposal that, should the proposed covered transaction be entered into, it shall not knowingly enter into any lower tier covered transaction with a person who is debarred, suspended, declared ineligible, or voluntarily excluded from participation in this covered transaction, unless authorized by the department or agency entering into this transaction.

g. The prospective first tier participant further agrees by submitting this proposal that it will include the clause titled "Certification Regarding Debarment, Suspension, Ineligibility and Voluntary Exclusion-Lower Tier Covered Transactions," provided by the department or contracting agency, entering into this covered transaction, without modification, in all lower tier covered transactions and in all solicitations for lower tier covered transactions exceeding the $25,000 threshold.

h. A participant in a covered transaction may rely upon a certification of a prospective participant in a lower tier covered transaction that is not debarred, suspended, ineligible, or voluntarily excluded from the covered transaction, unless it knows that the certification is erroneous. A participant is responsible for ensuring that its principals are not suspended, debarred, or otherwise ineligible to participate in covered transactions. To verify the eligibility of its principals, as well as the eligibility of any lower tier prospective participants, each participant may, but is not required to, check the Excluded Parties List System website (https://www.epls.gov/), which is compiled by the General Services Administration.

DocuSign Envelope ID: 894511EA-295B-49EB-A393-D26A6837FDD4

i. Nothing contained in the foregoing shall be construed to require the establishment of a system of records in order to render in good faith the certification required by this clause. The knowledge and information of the prospective participant is not required to exceed that which is normally possessed by a prudent person in the ordinary course of business dealings.

j. Except for transactions authorized under paragraph (f) of these instructions, if a participant in a covered transaction knowingly enters into a lower tier covered transaction with a person who is suspended, debarred, ineligible, or voluntarily excluded from participation in this transaction, in addition to other remedies available to the Federal Government, the department or agency may terminate this transaction for cause or default.

* * * * *

2. Certification Regarding Debarment, Suspension, Ineligibility and Voluntary Exclusion – First Tier Participants:

a. The prospective first tier participant certifies to the best of its knowledge and belief, that it and its principals:

(1) Are not presently debarred, suspended, proposed for debarment, declared ineligible, or voluntarily excluded from participating in covered transactions by any Federal department or agency;

(2) Have not within a three-year period preceding this proposal been convicted of or had a civil judgment rendered against them for commission of fraud or a criminal offense in connection with obtaining, attempting to obtain, or performing a public (Federal, State or local) transaction or contract under a public transaction; violation of Federal or State antitrust statutes or commission of embezzlement, theft, forgery, bribery, falsification or destruction of records, making false statements, or receiving stolen property;

(3) Are not presently indicted for or otherwise criminally or civilly charged by a governmental entity (Federal, State or local) with commission of any of the offenses enumerated in paragraph (a)(2) of this certification; and

(4) Have not within a three-year period preceding this application/proposal had one or more public transactions (Federal, State or local) terminated for cause or default.

b. Where the prospective participant is unable to certify to any of the statements in this certification, such prospective participant shall attach an explanation to this proposal.

2. **Instructions for Certification - Lower Tier Participants:**

(Applicable to all subcontracts, purchase orders and other lower tier transactions requiring prior FHWA approval or estimated to cost $25,000 or more - 2 CFR Parts 180 and 1200)

a. By signing and submitting this proposal, the prospective lower tier is providing the certification set out below.

b. The certification in this clause is a material representation of fact upon which reliance was placed when this transaction was entered into. If it is later determined that the prospective lower tier participant knowingly rendered an erroneous certification, in addition to other remedies available to the Federal Government, the department, or agency with which this transaction originated may pursue available remedies, including suspension and/or debarment.

c. The prospective lower tier participant shall provide immediate written notice to the person to which this proposal is submitted if at any time the prospective lower tier participant learns that its certification was erroneous by reason of changed circumstances.

d. The terms "covered transaction," "debarred," "suspended," "ineligible," "participant," "person," "principal," and "voluntarily excluded," as used in this clause, are defined in 2 CFR Parts 180 and 1200. You may contact the person to which this proposal is submitted for assistance in obtaining a copy of those regulations. "First Tier Covered Transactions" refers to any covered transaction between a grantee or subgrantee of Federal funds and a participant (such as the prime or general contract). "Lower Tier Covered Transactions" refers to any covered transaction under a First Tier Covered Transaction (such as subcontracts). "First Tier Participant" refers to the participant who has entered into a covered transaction with a grantee or subgrantee of Federal funds (such as the prime or general contractor). "Lower Tier Participant" refers any participant who has entered into a covered transaction with a First Tier Participant or other Lower Tier Participants (such as subcontractors and suppliers).

e. The prospective lower tier participant agrees by submitting this proposal that, should the proposed covered transaction be entered into, it shall not knowingly enter into any lower tier covered transaction with a person who is debarred, suspended, declared ineligible, or voluntarily excluded from participation in this covered transaction, unless authorized by the department or agency with which this transaction originated.

f. The prospective lower tier participant further agrees by submitting this proposal that it will include this clause titled "Certification Regarding Debarment, Suspension, Ineligibility and Voluntary Exclusion-Lower Tier Covered Transaction," without modification, in all lower tier covered transactions and in all solicitations for lower tier covered transactions exceeding the $25,000 threshold.

g. A participant in a covered transaction may rely upon a certification of a prospective participant in a lower tier covered transaction that is not debarred, suspended, ineligible, or voluntarily excluded from the covered transaction, unless it knows that the certification is erroneous. A participant is responsible for ensuring that its principals are not suspended, debarred, or otherwise ineligible to participate in covered transactions. To verify the eligibility of its principals, as well as the eligibility of any lower tier prospective participants, each participant may, but is not required to, check the Excluded Parties List System website (https://www.epls.gov/), which is compiled by the General Services Administration.

h. Nothing contained in the foregoing shall be construed to require establishment of a system of records in order to render in good faith the certification required by this clause. The knowledge and information of participant is not required to exceed that which is normally possessed by a prudent person in the ordinary course of business dealings.

i. Except for transactions authorized under paragraph e of these instructions, if a participant in a covered transaction knowingly enters into a lower tier covered transaction with a person who is suspended, debarred, ineligible, or voluntarily excluded from participation in this transaction, in addition to other remedies available to the Federal Government, the

DocuSign Envelope ID: 894511EA-295B-49EB-A393-D26A6837FDD4

department or agency with which this transaction originated may pursue available remedies, including suspension and/or debarment.

* * * * *

Certification Regarding Debarment, Suspension, Ineligibility and Voluntary Exclusion--Lower Tier Participants:

1. The prospective lower tier participant certifies, by submission of this proposal, that neither it nor its principals is presently debarred, suspended, proposed for debarment, declared ineligible, or voluntarily excluded from participating in covered transactions by any Federal department or agency.

2. Where the prospective lower tier participant is unable to certify to any of the statements in this certification, such prospective participant shall attach an explanation to this proposal.

* * * * *

XI. CERTIFICATION REGARDING USE OF CONTRACT FUNDS FOR LOBBYING

This provision is applicable to all Federal-aid construction contracts and to all related subcontracts which exceed $100,000 (49 CFR 20).

1. The prospective participant certifies, by signing and submitting this bid or proposal, to the best of his or her knowledge and belief, that:

a. No Federal appropriated funds have been paid or will be paid, by or on behalf of the undersigned, to any person for influencing or attempting to influence an officer or employee of any Federal agency, a Member of Congress, an officer or employee of Congress, or an employee of a Member of Congress in connection with the awarding of any Federal contract, the making of any Federal grant, the making of any Federal loan, the entering into of any cooperative agreement, and the extension, continuation, renewal, amendment, or modification of any Federal contract, grant, loan, or cooperative agreement.

b. If any funds other than Federal appropriated funds have been paid or will be paid to any person for influencing or attempting to influence an officer or employee of any Federal agency, a Member of Congress, an officer or employee of Congress, or an employee of a Member of Congress in connection with this Federal contract, grant, loan, or cooperative agreement, the undersigned shall complete and submit Standard Form-LLL, "Disclosure Form to Report Lobbying," in accordance with its instructions.

2. This certification is a material representation of fact upon which reliance was placed when this transaction was made or entered into. Submission of this certification is a prerequisite for making or entering into this transaction imposed by 31 U.S.C. 1352. Any person who fails to file the required certification shall be subject to a civil penalty of not less than $10,000 and not more than $100,000 for each such failure.

3. The prospective participant also agrees by submitting its bid or proposal that the participant shall require that the language of this certification be included in all lower tier subcontracts, which exceed $100,000 and that all such recipients shall certify and disclose accordingly.

DocuSign Envelope ID: 894511EA-295B-49EB-A393-D26A6837FDD4

^^

8 PROSECUTION AND PROGRESS

10-19-12

Replace "working days" in the 1st paragraph of section 8-1.02B(1) with:

10-19-12

original working days

Replace "working days" at each occurrence in the 1st paragraph of section 8-1.02C(1) with:

10-19-12

original working days

04-20-12

Delete the 4th paragraph of section 8-1.02C(1).

Replace "Contract" in the 9th paragraph of section 8-1.02C(1) with:

10-19-12

work

Replace the 1st paragraph of section 8-1.02C(3)(a) with:

04-20-12

Submit a description of your proposed schedule software for authorization.

04-20-12

Delete the last paragraph of section 8-1.02C(3)(a).

Replace section 8-1.02C(3)(b) with:

10-19-12

8-1.02C(3)(b) Reserved

04-20-12

Delete the 3rd paragraph of section 8-1.02C(5).

Replace "Contract" in the last paragraph of section 8-1.02C(5) with:

10-19-12

original

Replace "working days" in the 1st paragraph of section 8-1.02D(1) with:

10-19-12

original working days

Replace "8-1.02D(1)" in the 2nd paragraph of section 8-1.02D(1) with:

01-20-12

8-1.02C(1)

DocuSign Envelope ID: 894511EA-295B-49EB-A393-D26A6837FDD4

Replace "Contract" in the 3rd paragraph of section 8-1.02D(2) with:

10-19-12

work

Replace "Contract" in item 9 in the list in the 4th paragraph of section 8-1.02D(4) with:

10-19-12

work

Replace "Contract completion" in the 4th paragraph of section 8-1.02D(6) with:

10-19-12

work completion

Replace "Contract working days" in the 4th paragraph of section 8-1.02D(6) with:

10-19-12

original working days

04-20-12

Delete items 1.3 and 1.4 in the list in the 1st paragraph of section 8-1.02D(10).

Replace the last paragraph of section 8-1.04B with:

10-19-12

The Department does not adjust time for starting before receiving notice of Contract approval.

Replace the 1st paragraph of section 8-1.05 with:

10-19-12

Contract time starts on the last day specified to start job site activities in section 8-1.04 or on the day you start job site activities, whichever occurs first.

Replace the 2nd paragraph of section 8-1.05 with:

10-19-12

Complete the work within the Contract time.

10-19-12

Delete "unless the Contract is suspended for reasons unrelated to your performance" in the 4th paragraph of section 8-1.05.

Replace the headings and paragraphs in section 8-1.06 with:

10-19-12

The Engineer may suspend work wholly or in part due to conditions unsuitable for work progress. Provide for public safety and a smooth and unobstructed passageway through the work zone during the suspension as specified under sections 7-1.03 and 7-1.04. Providing the passageway is force account work. The Department makes a time adjustment for the suspension due to a critical delay. The Engineer may suspend work wholly or in part due to your failure to (1) fulfill the Engineer's orders, (2) fulfill a Contract part, or (3) perform weather-dependent work when conditions are favorable so that weather-related unsuitable conditions are avoided or do not occur. The Department may provide for a smooth and unobstructed passageway through the work during the suspension and deduct the cost from payments. The Department does not make a time adjustment for the suspension.

Upon the Engineer's order of suspension, suspend work immediately. Resume work when ordered.

DocuSign Envelope ID: 894511EA-295B-49EB-A393-D26A6837FDD4

Replace the 1st sentence in the 1st paragraph of section 8-1.07B with:

10-19-12

For a critical delay, the Department may make a time adjustment.

Add to the end of section 8-1.07C:

10-19-12

The Department does not make a payment adjustment for overhead incurred during non–working days that extend the Contract into an additional construction season.

Replace the 1st paragraph of section 8-1.07C with:

10-19-12

For an excusable delay that affects your costs, the Department may make a payment adjustment.

Replace "8-1.08B and 8-1.08C" in the 1st paragraph of section 8-1.10A with:

08-05-11

8-1.10B and 8-1.10C

Replace section 8-1.10D with:

10-19-12

8-1.10D Reserved

^^

9 PAYMENT

11-15-13

Add to the list in the 1st paragraph of section 9-1.03:

07-19-13

3. Any royalties and costs arising from patents, trademarks, and copyrights involved in the work

Replace item 1 in the 3rd paragraph of section 9-1.03 with:

01-18-13

1. Full compensation for all work involved in each bid item shown on the Bid Item List by the unit of measure shown for that bid item

Replace "in" in the 3rd paragraph of section 9-1.04A with:

10-19-12

for

Add to the end of section 9-1.04A:

10-19-12

For nonsubcontracted work paid by force account for a contract with a TRO bid item, the markups are those shown in the following table instead of those specified in sections 9-1.04B–D:

Cost	Percent markup
Labor	30
Materials	10
Equipment rental	10

DocuSign Envelope ID: 894511EA-295B-49EB-A393-D26A6837FDD4

04-20-12

Delete ", Huntington Beach," in the 3rd paragraph of section 9-1.07A.

Replace the formula in section 9-1.07B(2) with:

04-20-12

Qh = *HMATT* x *Xa*

Replace "weight of dry aggregate" in the definition of the variable *Xa* in section 9-1.07B(2) with:

04-20-12

total weight of HMA

Replace the formula in section 9-1.07B(3) with:

04-20-12

Qrh = *RHMATT* x 0.80 x *Xarb*

Replace "weight of dry aggregate" in the definition of the variable *Xarb* in section 9-1.07B(3) with:

04-20-12

total weight of rubberized HMA

Replace the heading of section 9-1.07B(4) with:

04-20-12

Hot Mix Asphalt with Modified Asphalt Binder

Add between "in" and "modified" in the introductory clause of section 9-1.07B(4):

04-20-12

HMA with

Replace the formula in section 9-1.07B(4) with:

04-20-12

Qmh = *MHMATT* x [(100 - *Xam*) / 100] x *Xmab*

Replace "weight of dry aggregate" in the definition of the variable *Xmab* in section 9-1.07B(4) with:

04-20-12

total weight of HMA

Replace the formula in section 9-1.07B(5) with:

04-20-12

Qrap = *HMATT* x *Xaa*

Replace "weight of dry aggregate" in the definitions of the variables *Xaa* and *Xta* in section 9-1.07B(5) with:

04-20-12

total weight of HMA

Add after the variable definitions in section 9-1.07B(9):

04-20-12

The quantity of extender oil is included in the quantity of asphalt.

DocuSign Envelope ID: 894511EA-295B-49EB-A393-D26A6837FDD4

Replace the headings and paragraphs in section 9-1.11 with:

10-19-12

9-1.11A General

Section 9-1.11 applies if a bid item for time-related overhead is included in the Contract. If a bid item for time-related overhead is included, you must exclude the time-related overhead from every other bid item price.

9-1.11B Payment Quantity

The TRO quantity does not include the number of working days to complete plant establishment work.

For a contract with a TRO lump sum quantity on the Bid Item List, the Department pays you based on the following conversions:

1. LS unit of measure is replaced with WDAY
2. Lump sum quantity is replaced with the number of working days bid
3. Lump sum unit price is replaced with the item total divided by the number of working days bid

9-1.11C Payment Inclusions

Payment for the TRO bid item includes payment for time-related field- and home-office overhead for the time required to complete the work.

The field office overhead includes time-related expenses associated with the normal and recurring construction activities not directly attributed to the work, including:

1. Salaries, benefits, and equipment costs of:
   - 1.1. Project managers
   - 1.2. General superintendents
   - 1.3. Field office managers
   - 1.4. Field office staff assigned to the project
2. Rent
3. Utilities
4. Maintenance
5. Security
6. Supplies
7. Office equipment costs for the project's field office

The home-office overhead includes the fixed general and administrative expenses for operating your business, including:

1. General administration
2. Insurance
3. Personnel and subcontract administration
4. Purchasing
5. Accounting
6. Project engineering and estimating

Payment for the TRO bid item does not include payment for:

1. The home-office overhead expenses specifically related to:
   - 1.1. Your other contracts or other businesses
   - 1.2. Equipment coordination
   - 1.3. Material deliveries
   - 1.4. Consultant and legal fees
2. Non-time-related costs and expenses such as mobilization, licenses, permits, and other charges incurred once during the Contract

DocuSign Envelope ID: 894511EA-295B-49EB-A393-D26A6837FDD4

3. Additional overhead involved in incentive/disincentive provisions to satisfy an internal milestone or multiple calendar requirements
4. Additional overhead involved in performing additional work that is not a controlling activity
5. Overhead costs incurred by your subcontractors of any tier or suppliers

9-1.11D Payment Schedule

For progress payments, the total work completed for the TRO bid item is the number of working days shown for the pay period on the *Weekly Statement of Working Days*.
For progress payments, the Department pays a unit price equal to the lesser of the following amounts:

1. Price per working day as bid or as converted under section 9-1.11B.
2. 20 percent of the total bid divided by the number of original working days

For a contract without plant establishment work, the Department pays you the balance due of the TRO item total as specified in section 9-1.17B.
For a contract with plant establishment work, the Department pays you the balance due of the TRO item total in the 1st progress payment after all non–plant establishment work is completed.

9-1.11E Payment Adjustments

The 3rd paragraph of section 9-1.17C does not apply.
The Department does not adjust the unit price for an increase or decrease in the TRO quantity except as specified in section 9-1.11E.
Section 9-1.17D(2)(b) does not apply except as specified for the audit report below.
If the TRO bid item quantity exceeds 149 percent of the quantity shown on the Bid Item List or as converted under section 9-1.11B, the Engineer may adjust or you may request an adjustment of the unit price for the excess quantity. For the adjustment, submit an audit report within 60 days of the Engineer's request. The report must be prepared as specified for an audit report for an overhead claim in section 9-1.17D(2)(b).
Within 20 days of the Engineer's request, make your financial records available for an audit by the State for the purpose of verifying the actual rate of TRO described in your audit. The actual rate of TRO described is subject to the Engineer's authorization.
The Department pays the authorized actual rate for TRO in excess of 149 percent of the quantity shown on the Bid Item List or as converted under section 9-1.11B.
The Department pays for 1/2 the cost of the report; the Contractor pays for the other 1/2. The cost is determined under section 9-1.05.

Replace the paragraphs of section 9-1.16D with:

07-19-13

9-1.16D(1) General

Section 9-1.16D applies if a bid item for mobilization is shown on the Bid Item List.
Payments for mobilization made under section 9-1.16D are in addition to the partial payments made under Pub Cont Code § 10261.
Section 9-1.16D(2) applies unless the Contract includes a special provision for section 9-1.16D(1) that specifies section 9-1.16D(3) applies.

11-15-13

9-1.16D(2) Mobilization for Projects Except for Those Over Water Requiring Marine Access

07-19-13

The Department makes partial payments for mobilization under Pub Cont Code § 10264(a) except the amount of work completed does not include the amount earned for mobilization. The partial

DocuSign Envelope ID: 894511EA-295B-49EB-A393-D26A6837FDD4

payment amount is reduced by a prorated amount bid in excess of the maximum allowed under Pub Cont Code § 10264(a)(5).
The Department pays the item total for mobilization in excess of the maximum allowed under Pub Cont Code § 10264(a)(5) in the 1st payment after Contract acceptance.

9-1.16D(3) Mobilization for Projects Over Water Requiring Marine Access

The Department makes partial payments for mobilization under Pub Cont Code § 10264(b) except the amount of work completed does not include the amount earned for mobilization. The partial payment amount is reduced by a prorated amount bid in excess of the maximum allowed under Pub Cont Code § 10264(b)(6).
The Department pays the item total for mobilization in excess of the maximum allowed under Pub Cont Code § 10264(b)(6) in the 1st payment after Contract acceptance.

10-19-12

Delete "revised Contract" in item 1 of the 1st paragraph of section 9-1.16E(2).

Replace "2014" in the 1st paragraph of section 9-1.16F with:

10-19-12

2020

Replace the 2nd paragraph of section 9-1.17C with:

10-19-12

Submit either a written acceptance of the proposed final estimate or a claim statement postmarked or hand delivered before the 31st day after receiving the proposed final estimate.

Add between "the" and "final estimate" in the 1st sentence in the 3rd paragraph of section 9-1.17C:

10-19-12

proposed

Replace the 1st sentence in the 6th paragraph of section 9-1.17D(2)(b) with:

07-19-13

The CPA's audit must be performed as an examination-level engagement under the attestation engagements in the *Government Auditing Standards* published by the Comptroller General of the United States.

^^^

DocuSign Envelope ID: 894511EA-295B-49EB-A393-D26A6837FDD4

10-1.02 WORK SEQUENCING

Before obliterating any traffic stripes, pavement markings, and pavement markers to be replaced at the same location, reference the stripes, markings, and markers. Include limits and transitions with control points to reestablish the new stripes, markings, and markers.

10-1.03 TIME CONSTRAINTS

Reserved

10-1.04 TRAINING AND MEETINGS

Training and meetings are held at times and locations you and the Engineer agree to.

10-1.05–10-1.10 RESERVED

10-2 SUSTAINABLE DESIGN REQUIREMENTS

10-2.01 GENERAL

10-2.01A General

Reserved

10-2.01B–10-2.01H Reserved

10-2.02 *CALGREEN* TIER 1

10-2.02A–10-2.02H Reserved

10-2.03 LEED

10-2.03A–10-2.03H Reserved

10-3 RESERVED

Replace section 10-4 with:

05-30-14

10-4 WATER USAGE

Section 10-4 includes general specifications for your use of water for construction activities.
The Department encourages you to conserve water in all construction activities.
The Engineer notifies you of any (1) water shortage or (2) mandate from a local water authority to ration water. Within 10 days of the notification, submit a water conservation plan. The plan must include:

1. List of construction activities that require water
2. Measures you will implement for each activity to conserve water
3. Method for curing concrete other than the water method if included in the work
4. Dust palliative you will use for dust control

Any unavailability of water that delays a controlling activity is a material shortage.

Replace section 10-5 with:

05-30-14

10-5 DUST CONTROL

Section 10-5 includes general specifications for controlling dust resulting from the work.
Prevent and alleviate dust by:

1. Applying a dust palliative under section 18
2. Applying temporary soil stabilization under section 13-5
3. Managing material stockpiles under section 13-4.03C(3)

DocuSign Envelope ID: 894511EA-295B-49EB-A393-D26A6837FDD4

04-19-13

10-6 JOB SITE WATER CONTROL

10-6.01 GENERAL

Section 10-6 includes specifications for controlling water to provide a dry working area at the job site.

10-6.02 WATER-FILLED COFFERDAM

Reserved

10-6.03–10-6.10 RESERVED

10-7–10-20 RESERVED

^^

11 QUALITY CONTROL AND ASSURANCE

07-19-13

Replace section 11-2 with:

07-19-13

11-2 RESERVED

Replace the table in the 3rd paragraph of section 11-3.01A with:

07-19-13

AWS code	Year of adoption
D1.1	2010
D1.3	2008
D1.4	2011
D1.5	2010
D1.6	2007
D1.8	2009

Replace "does" in the definition of "continuous inspection" in section 11-3.01B with:

07-19-13

do

Replace "gross nonconformance" and its definition in section 11-3.01B with:

07-19-13

gross nonconformance: Rejectable indications are present in more than 20 percent of the tested weld length.

Replace the introductory clause in the 1st paragraph of section 11-3.01C with:

07-19-13

Replace clause 6.1.3 of AWS D1.1, the 1st paragraph of clause 7.1.2 of AWS D1.4, and clause 6.1.2 of AWS D1.5 with:

Replace the 3rd paragraph of section 11-3.01C with:

07-19-13

For each inspection, including fit-up, WPS verification, and final weld inspection, the QC Inspector must confirm and document compliance with the specifications, AWS welding codes, and any referenced drawings.

DocuSign Envelope ID: 894511EA-295B-49EB-A393-D26A6837FDD4

Replace the paragraphs in section 11-3.01D with:

07-19-13

The Engineer has the authority to verify the qualifications or certifications of any welder, QC Inspector, or NDT personnel to specified levels by retests or other means determined by the Engineer. If welding will be performed without gas shielding, then qualification must also include welding without gas shielding.

Replace clause 6.14.6.1 of AWS D1.1, clause 7.8 of AWS D1.4, and clause 6.1.3.4 of AWS D1.5 with:

Personnel performing NDT must be qualified and certified under American Society for Nondestructive Testing (ASNT) Recommended Practice No. SNT-TC-1A and the written practice of the NDT firm. The written practice of the NDT firm must comply with or exceed the guidelines of the ASNT Recommended Practice No. SNT-TC-1A. Individuals who perform NDT, review the results, and prepare the written reports must be one of the following:

1. Certified NDT Level II technicians
2. Level III technicians certified to perform the work of Level II technicians

Replace the heading and the 1st through 3rd paragraphs of section 11-3.01E with:

07-19-13

11-3.01E Weld Joint Details

If weld joint details proposed for use in the work are not prequalified under clause 3 of AWS D1.1 or figure 2.4 or 2.5 of AWS D1.5, submit the proposed WPS and the intended weld joint locations. Upon authorization of the proposed joint detail locations and qualification of the proposed joint details, welders and welding operators using these details must weld an additional qualification test plate using the WPS variables and the weld joint detail to be used in production. The test plate must:

1. Have the maximum thickness to be used in production and a minimum length of 18 inches.
2. Be mechanically and radiographically tested. Mechanical and radiographic testing and acceptance criteria must comply with the applicable AWS codes.

If a nonprequalified weld joint configuration is proposed using a combination of WPSs for work welded under AWS D1.1, you may conduct a single test combining the WPSs to be used in production, if the essential variables, including weld bead placement, of each process are limited to those established in table 4.5 of AWS D1.1.

Replace the 1st paragraph of section 11-3.01F with:

07-19-13

Replace paragraph 3 of clause 6.26.3.2 of AWS D1.5 with:

3. If indications that exhibit these planar characteristics are present at scanning sensitivity, or other evidence exists to suggest the presence of transverse cracks, a more detailed evaluation of the discontinuity by other means must be performed (e.g., alternate UT techniques, RT, grinding, or gouging for visual inspection or MT of the excavated areas.). For welds that have transverse cracks, excavate the full length of the crack plus 2 inches of weld metal on each side adjacent to the crack and reweld.

DocuSign Envelope ID: 894511EA-295B-49EB-A393-D26A6837FDD4

Replace "section" in the 2nd paragraph of section 11-3.01F with:

07-19-13

clause

Replace the 1st paragraph of section 11-3.02A with:

07-19-13

Except for stud welding, section 11-3.02 applies to (1) work welded under sections 49, 52, 55, and 75-1.03E and (2) work in section 99 that must comply with an AWS welding code.

Replace the 4th through 6th paragraphs of section 11-3.02C(2) with:

07-19-13

Submit an amended welding QC plan or an addendum to the welding QC plan for any changes to:

1. WPSs
2. NDT firms
3. QC personnel or procedures
4. NDT personnel or procedures
5. Systems for tracking and identifying welds
6. Welding personnel

Allow 15 days for the Engineer's review of an amended welding QC plan or an addendum to the welding QC plan.
Submit 7 copies of each authorized QC plan and any authorized addendums. Make 1 copy available at each location where work is performed.

Replace the 1st paragraph of section 11-3.02C(3) with:

07-19-13

Submit a welding report within 7 days following the performance of any welding. The welding report must include:

1. Daily production log for welding for each day that welding is performed
2. Reports of all visual weld inspections and NDT performed, whether specified, additional, or informational
3. Radiographs and radiographic reports, and other required NDT reports
4. Summary of welding and NDT activities that occurred during the reporting period
5. Reports of each application of heat straightening
6. Summarized log listing the rejected lengths of weld by welder, position, process, joint configuration, and piece number
7. Documentation that you have:
   - 7.1. Evaluated all radiographs and radiograph reports and NDT and NDT reports
   - 7.2. Corrected all rejectable deficiencies and that all repaired welds have been reexamined using the required NDT and found acceptable
8. Reports or chart recordings of each application of any stress relieving used
9. Reports and chart recordings for any electroslag welding used

Add between "radiographic" and "envelopes" in the introductory clause in the 3rd paragraph of section 11-3.02C(3):

07-19-13

film

07-19-13

Delete the 3rd sentence in the 5th paragraph of section 11-3.02C(3).

DocuSign Envelope ID: 894511EA-295B-49EB-A393-D26A6837FDD4

Replace the introductory clause in the 1st paragraph of section 11-3.02D with:

07-19-13

Clauses 6.1.4.1 and 6.1.4.3 of AWS D1.1, the 2nd paragraph of clause 7.1.2 of AWS D1.4, clauses 6.1.3.1 through 6.1.3.3 of AWS D1.5, and clause 7.2.3 of AWS D1.8 are replaced with:

Replace items 1 and 2 in the list in the 2nd paragraph of section 11-3.02D with:

07-19-13

1. Work is welded at a permanent fabrication or manufacturing plant that is certified under the AISC Certification Program for Steel Bridge Fabricators, Intermediate Bridges, and Fracture-Critical Member endorsement if required.
2. Structural steel for building construction work is performed at a permanent fabrication or manufacturing plant that is certified under the AISC Quality Certification Program, Category STD, Standard for Steel Building Structures.

07-19-13

Delete the 3rd paragraph of section 11-3.02D.

Replace the 1st sentence in the 4th paragraph of section 11-3.02D with:

07-19-13

Except for the exempt facilities identified above, an authorized independent third party must witness the qualification tests for welders or welding operators.

Replace the paragraph in section 11-3.02F with:

07-19-13

Welding procedures qualification for work welded under AWS D1.5 must comply with clause 5.12 or 5.12.4 of AWS D1.5 and the following:

1. Unless considered prequalified, qualify fillet welds in each position. Conduct the fillet weld soundness test using the essential variables of the WPS as established by the PQR.
2. For qualifying joints that do not comply with figures 2.4 and 2.5 of AWS D1.5, conduct the test complying with figure 5.3 using the welding parameters that were established for the test conducted complying with figure 5.1.
3. Macroetch tests are required for WPS qualification tests, and acceptance must comply with clause 5.19.3 of AWS D1.5.
4. If a nonstandard weld joint is to be made using a combination of WPSs, you may conduct a test under figure 5.3, combining the qualified or prequalified WPSs to be used in production, if the essential variables, including weld bead placement, of each process are limited to those established in table 5.3 of AWS D1.5.
5. Before preparing mechanical test specimens, inspect the PQR welds by visual and radiographic tests. The backing bar must be 3 inches in width and must remain in place during NDT. Results of the visual and radiographic tests must comply with clause 6.26.2 of AWS D1.5 excluding clause 6.26.2.2. All other requirements for clause 5.17 are applicable.

Add to the list in the 3rd paragraph of section 11-3.02G:

07-19-13

3. Repairs not included in the welding QC plan

Replace the 1st sentence of the 4th paragraph of section 11-3.02G with:

07-19-13

Requests to perform 3rd-time excavations, repairs of cracks, or repairs not included in the welding QC plan must include an engineering evaluation.

DocuSign Envelope ID: 894511EA-295B-49EB-A393-D26A6837FDD4

^^

12 TEMPORARY TRAFFIC CONTROL

05-30-14

Replace the 5th paragraph of section 12-3.01A(1) with:

05-30-14

Repair or replace traffic-handling equipment and devices damaged from any cause during the Contract, including repainting if necessary. The condition of temporary traffic control devices must comply with the current American Traffic Safety Services Association publication "Quality Guidelines for Temporary Traffic Control Devices and Features."

Replace the 1st paragraph of section 12-3.01A(4) with:

10-19-12

Category 2 temporary traffic control devices must be on FHWA's list of acceptable, crashworthy Category 2 hardware for work zones. This list is available on FHWA's Safety Program Web site.

Replace "project" in the 4th paragraph of section 12-3.02C with:

10-19-12

work

Add after "Display" in item 4 in the list in the 2nd paragraph of section 12-3.03B:

04-19-13

or Alternating Diamond

Replace "project" in the 3rd paragraph of section 12-3.07C with:

10-19-12

work

Add to section 12-3:

07-19-13

12-3.18 AUTOMATED WORK ZONE INFORMATION SYSTEM

Reserved

12-3.19–12-3.25 RESERVED

Replace the 7th through 9th paragraphs of section 12-4.02A with:

07-19-13

If pedestrian traffic is allowed to pass through construction areas, provide a temporary pedestrian facility through the construction areas within the highway. Include protective overhead covering as necessary to ensure protection from falling objects and drippings from overhead structures.

At locations where pedestrian openings through falsework are required, provide a temporary pedestrian facility with protective overhead covering during all bridge construction activities.

Temporary pedestrian facilities must comply with section 12-7.

If an activity requires a closure of a walkway, another walkway must be made available nearby, off of the traveled way.

DocuSign Envelope ID: 894511EA-295B-49EB-A393-D26A6837FDD4

07-19-13

Delete the 12th paragraph of section 12-4.02A.

Replace section 12-4.03 with:

07-19-13

12-4.03 CLOSURE SCHEDULES AND CONDITIONS

12-4.03A General

Submit closure schedule requests and closure schedule amendments using LCS to show the locations and times of the requested closures.

The Department provides LCS training. Request the LCS training at least 30 days before submitting the 1st lane closure request. The Department provides the training within 15 days after your request. The training may be web based.

Except for web-based training, the training is held at a time and location you and the Engineer agree to.

For web-based training, the Engineer provides you the website address to access the training.

Within 5 business days after completion of the training, the Department provides LCS accounts and user identifications to your assigned, trained representatives.

Each representative must maintain a unique password and current user information in the LCS.

12-4.03B Closure Schedules

Every Monday by noon, submit a closure schedule request of planned closures for the next week period. The next week period is defined as Sunday noon through the following Sunday noon.

Submit a closure schedule request not less than 25 days and not more than 125 days before the anticipated start of any activity that reduces:

1. Horizontal clearances of traveled ways, including shoulders, to 2 lanes or less due to activities such as temporary barrier placement and paving
2. Vertical clearances of traveled way, including shoulders, due to activities such as pavement overlays, overhead sign installation, falsework, or girder erection

Submit closure schedule amendments, including adding additional closures, by noon at least 3 business days before a planned closure.

Cancel closure requests using LCS at least 48 hours before the start time of the closure.

You will be notified through LCS of unauthorized closures or closures that require coordination with other parties as a condition for authorization.

The Engineer may reschedule a closure cancelled due to unsuitable weather.

If a closure is not opened to traffic by the specified time, suspend work. No further closures are allowed until the Engineer has reviewed and authorized a work plan submitted by you that ensures that future closures will be opened to traffic by the specified time. Allow 2 business days for review of your proposed work plan. The Department does not compensate you for your losses due to the suspension of work resulting from the late opening of closures.

Notify the Engineer of delays in your activities caused by:

1. Your closure schedule request being denied although your requested closures are within the specified time frame allowed for closures. The Department does not compensate you for your losses due to amendments to the closure schedule that are not authorized.
2. Your authorized closure being denied.

If you are directed to remove a closure before the time designated in the authorized closure schedule, you will be compensated for the delay.

DocuSign Envelope ID: 894511EA-295B-49EB-A393-D26A6837FDD4

12-4.03C Contingency Plan

Section 12-4.03C applies if a contingency plan is specified in the special provisions or if a contingency plan is requested.

If a contingency plan is requested, submit the contingency plan within 1 business day of the request.

The contingency plan must identify the activities, equipment, processes, and materials that may cause a delay in the opening of a closure to traffic. The plan must include:

1. List of additional or alternate equipment, materials, or workers necessary to ensure continuing activities and on-time opening of closures if a problem occurs. If the additional or alternate equipment, materials, or workers are not on site, specify their location, the method for mobilizing these items, and the required time to complete mobilization.
2. General time-scaled logic diagram displaying the major activities and sequence of planned operations. For each activity, identify the critical event when the contingency plan will be activated.

Based on the Engineer's review, additional materials, equipment, workers, or time to complete activities from that specified in the contingency plan may be required.

Submit revisions to a contingency plan at least 3 business days before starting the activity requiring a contingency plan. Allow 2 business days for review of the revised contingency plan.

Replace section 12-7 with:

07-19-13

12-7 TEMPORARY PEDESTRIAN FACILITIES

12-7.01 GENERAL

Section 12-7 includes specifications for constructing temporary pedestrian facilities.

Temporary pedestrian facilities must comply with the *California MUTCD*, Part 6, Chapter 6D, "Pedestrian and Worker Safety."

Design temporary pedestrian facilities with protective overhead covering to support all imposed loads.

The design load and maximum allowable stresses for temporary pedestrian facilities with protective overhead covering must comply with section 48-2.01D(3). The minimum design live load for the temporary pedestrian facilities with protective overhead covering must be 150 psf for the entire structure.

The minimum width of the temporary pedestrian facilities with protective overhead covering between the inside face of handrails must be 60 inches. The clear height of the temporary pedestrian facilities with protective overhead covering measured from the floor surface to the canopy overhead must be at least 8 feet. Provide adequate lighting at all times. Lighting must comply with section 86-6.13.

Submit shop drawings with supporting calculations for temporary pedestrian facilities with protective overhead covering. Shop drawings and calculations must be signed by an engineer who is registered as a civil engineer in the State.

12-7.02 MATERIALS

Walkways must be surfaced with HMA, portland cement concrete, or wood. The surface must be skid resistant and free of irregularities.

Hand railings must be S4S lumber and painted white.

Protective overhead covering of temporary pedestrian facilities must be plywood at least 3/4 inch thick or wood planking with a nominal thickness of 2 inches minimum.

DocuSign Envelope ID: 894511EA-295B-49EB-A393-D26A6837FDD4

12-7.03 CONSTRUCTION

Construct hand railings on each side of a temporary pedestrian facility as necessary to protect pedestrian traffic from hazards due to work activities or adjacent vehicular traffic.
Maintain temporary pedestrian facilities in good condition and keep them clear of obstructions.

12-7.04 PAYMENT

Not Used

^^

13 WATER POLLUTION CONTROL

05-30-14

04-19-13

Delete item 3 in the list in the 4th paragraph of section 13-1.01A.

Add to section 13-1.01A:

11-15-13

Comply with the Department's general permit issued by the State Water Resources Control Board for *Order No. 2012-0011-DWQ, NPDES No. CAS000003, National Pollutant Discharge Elimination System (NPDES) Permit, Statewide Storm Water Permit and Waste Discharge Requirements (WDRs) for the State of California, Department of Transportation (Caltrans)*. The Department's general permit governs stormwater and nonstormwater discharges from the Department's properties, facilities, and activities. The Department's general permit may be viewed at the Web site for the State Water Resources Control Board, Storm Water Program, Caltrans General Permit.

Add to the list in the 1st paragraph of section 13-1.01D(3)(b):

10-21-11

3. Have completed SWRCB approved QSD training and passed the QSD exam

Add to the list in the 2nd paragraph of section 13-1.01D(3)(b):

10-21-11

3. Have completed SWRCB approved QSP training and passed the QSP exam

Replace "NEL violation" in item 3.6.2 in the list in the 1st paragraph of section 13-1.01D(3)(c) with:

04-19-13

receiving water monitoring trigger

Replace the 1st paragraph in section 13-2.01B with:

04-19-13

Within 7 days after Contract approval, submit 2 copies of your WPCP for review. Allow 5 business days for review.
After the Engineer authorizes the WPCP, submit an electronic copy and 3 printed copies of the authorized WPCP.
If the RWQCB requires review of the authorized WPCP, the Engineer submits the authorized WPCP to the RWQCB for its review and comment. If the Engineer orders changes to the WPCP based on the RWQCB's comments, amend the WPCP within 3 business days.

DocuSign Envelope ID: 894511EA-295B-49EB-A393-D26A6837FDD4

Replace the 1st paragraph in section 13-3.01B(2)(a) with:

04-19-13

Within 15 days of Contract approval, submit 3 copies of your SWPPP for review. The Engineer provides comments and specifies the date when the review stopped if revisions are required. Change and resubmit a revised SWPPP within 15 days of receiving the Engineer's comments. The Department's review resumes when a complete SWPPP has been resubmitted.

When the Engineer authorizes the SWPPP, submit an electronic copy and 4 printed copies of the authorized SWPPP.

If the RWQCB requires review of the authorized SWPPP, the Engineer submits the authorized SWPPP to the RWQCB for its review and comment. If the Engineer requests changes to the SWPPP based on the RWQCB's comments, amend the SWPPP within 10 days.

Replace "NELs" in item 3.1 in the 3rd paragraph of section 13-3.01B(2)(a) with:

04-19-13

receiving water monitoring triggers

Replace section 13-3.01B(6)(c) with:

04-19-13

13-3.01B(6)(c) Receiving Water Monitoring Trigger Report

Whenever a receiving water monitoring trigger is exceeded, notify the Engineer and submit a receiving water monitoring trigger report within 48 hours after conclusion of a storm event. The report must include:

1. Field sampling results and inspections, including:
   - 1.1. Analytical methods, reporting units, and detection limits
   - 1.2. Date, location, time of sampling, visual observation and measurements
   - 1.3. Quantity of precipitation from the storm event
2. Description of BMPs and corrective actions

Replace "NEL" in the 6th paragraph of section 13-3.01C(1) with:

04-19-13

receiving water monitoring trigger

Replace section 13-3.01C(3) with:

04-19-13

13-3.01C(3) Receiving Water Monitoring Trigger

For a risk level 3 project, receiving water monitoring triggers must comply with the values shown in the following table:

DocuSign Envelope ID: 894511EA-295B-49EB-A393-D26A6837FDD4

Receiving Water Monitoring Trigger

Parameter	Test method	Detection limit (min)	Unit	Value
pH	Field test with calibrated portable instrument	0.2	pH	Lower limit = 6.0 Upper limit = 9.0
Turbidity	Field test with calibrated portable instrument	1	NTU	500 NTU max

The storm event daily average for storms up to the 5-year, 24-hour storm must not exceed the receiving water monitoring trigger for turbidity.
The daily average sampling results must not exceed the receiving water monitoring trigger for pH.

04-19-13

Delete "and NELs are violated" in the 3rd paragraph of section 13-3.03C.

Replace "working days" at each occurrence in section 13-3.04 with.

10-19-12

original working days

04-19-13

Delete the 1st sentence in the 2nd paragraph of section 13-4.03C(3).

Add between the 2nd and 3rd paragraphs of section 13-4.03C(3):

04-19-13

Manage stockpiles by implementing water pollution control practices on:

1. Active stockpiles before a forecasted storm event
2. Inactive stockpiles according to the WPCP or SWPPP schedule

05-30-14

Delete the 7th paragraph of section 13-4.03C(3).

Replace the heading of section 13-4.03E(1) with:

05-30-14

General

05-30-14

Delete the 1st through 5th sentences in the 2nd paragraph of section 13-4.03E(1).

Replace the 1st sentence of the 1st paragraph of section 13-4.03E(3) with:

05-30-14

Limit vehicle and equipment cleaning or washing at the job site to that needed for safety and protection of the equipment and compliance with PLACs.

Replace the paragraph in section 13-4.04 with:

04-20-12

Not Used

DocuSign Envelope ID: 894511EA-295B-49EB-A393-D26A6837FDD4

Replace "20-7.02D(6)" in section 13-5.02C with:

07-19-13

20-5.03E

10-19-12

Delete "or stockpile" in the 3rd paragraph of section 13-5.02F.

Replace "20-7.03I(10)" in section 13-5.03C with:

07-19-13

20-5.03E(3)

Replace section 13-5.03F with:

04-20-12

13-5.03F Reserved

10-19-12

Delete "or stockpile" in item 1 in the list in the 1st paragraph of section 13-5.03K.

10-19-12

Delete the 3rd paragraph of section 13-5.03K.

Replace the 2nd sentence in the 1st paragraph of section 13-9.01A with:

10-19-12

You may use any of the following systems for temporary concrete washout:

1. Temporary concrete washout facility
2. Portable temporary concrete washout
3. Temporary concrete washout bin

Replace the 2nd paragraph of section 13-9.01B with:

10-19-12

Retain and submit an informational submittal for records of disposed concrete waste.

10-19-12

Delete the 4th paragraph of section 13-9.01B.

10-19-12

Delete "if authorized" in the 1st sentence in the 1st paragraph of section 13-9.02A.

Replace "at least 3-inch" in the 3rd sentence in the 1st paragraph of section 13-9.02A with:

10-19-12

6-inch

^^

DocuSign Envelope ID: 894511EA-295B-49EB-A393-D26A6837FDD4

14 ENVIRONMENTAL STEWARDSHIP

05-30-14

Replace section 14-9.03 with:

05-30-14

14-9.03 RESERVED

^^

15 EXISTING FACILITIES

10-17-14

Replace section 15-1.03D with:

07-19-13

15-1.03D Reserved

Replace "metal beam guard railing" in the 1st paragraph of section 15-2.01C with:

07-19-13

guardrail

Replace the paragraphs of section 15-2.02B(1) with:

07-19-13

Section 15-2.02B includes specifications for removing pavement, base, subbase, and subgrade.
If only a portion of the pavement is removed, saw-cut the outline of the removal area on a neat line and with a power-driven saw before removing.
For asphalt concrete pavement, saw cuts must be at least 2 inches deep unless otherwise described.

Replace section 15-2.02B(4)(b) with:

07-19-13

15-2.02B(4)(b) Reserved

Add to section 15-2.02B:

07-19-13

15-2.02B(5) Remove Concrete Pavement

15-2.02B(5)(a) General

Remove only the portion of pavement to be replaced or repaired during the same lane closure. If there is overlying material on the concrete pavement, remove it with the pavement.
Do not impact the surface within 18 inches of the pavement to remain in place. Use removal methods that do not damage the remaining pavement and base. Slab-lifting equipment must attach to the pavement.
Instead of disposing of removed concrete pavement by removing it from the job site, you may dispose of it under section 15-3.01.

15-2.02B(5)(b) Saw Cuts

Saw cut using a diamond blade and make cuts perpendicular to the pavement surface. Saw cutting is not required where concrete pavement is adjacent to asphalt concrete pavement.
Saw cut (1) no more than 2 days before removing pavement and (2) such that traffic will not dislodge any pavement piece or segment. Saw cut perpendicular to the traveled way except you may cut parallel or diagonal to the traveled way when removing the pavement during the same lane closure as the saw cutting.

DocuSign Envelope ID: 894511EA-295B-49EB-A393-D26A6837FDD4

You may make additional saw cuts within the sawed outline.
Saw cuts must be the full depth of the pavement unless otherwise shown.
Saw cut at longitudinal and transverse joints to remove entire slabs. For partial-slab areas, the Engineer determines the exact saw-cut locations.

15-2.02B(5)(c) Reserved

15-2.02B(6) Reserved

15-2.02B(7) Payment

Reserved

Replace section 15-2.02G with:

07-19-13

15-2.02G Remove Guardrail

Where removing guardrail, remove any concrete anchors and steel foundation tubes.

Replace the 1st paragraph of section 15-2.02K with:

07-19-13

Box culverts, concrete pipes, inlets, headwalls, and endwalls must be completely removed if any portion of these structures is (1) within 3 feet of the grading plane in excavation areas, (2) within 1 foot of original ground in embankment areas, or (3) shown to be removed.

Replace "Metal beam guard railing" in the table in the 2nd paragraph of section 15-2.03A(2)(a) with:

07-19-13

Guardrail

Replace the heading of section 15-2.03B with:

07-19-13

Salvage Guardrail

Replace the heading of section 15-2.04D with:

07-19-13

Reconstruct Guardrail

Replace section 15-2.09D with:

07-19-13

15-2.09D Reserved

Replace the 4th paragraph of section 15-2.10B with:

01-18-13

Instead of using new materials similar in character to those in the existing structure, you may use raising devices to adjust a manhole to grade. Before starting paving work, measure and fabricate raising devices. Raising devices must:

1. Comply with the specifications for section 75 except that galvanizing is not required
2 Have a shape and size that matches the existing frame
3. Be match marked by painting identification numbers on the device and corresponding structure
4. Result in an installation that is equal to or better than the existing one in stability, support, and nonrocking characteristics
5. Be fastened securely to the existing frame without projections above the surface of the road or into the clear opening

DocuSign Envelope ID: 894511EA-295B-49EB-A393-D26A6837FDD4

Replace the heading of section 15-2.10D with:

07-19-13

Adjust Guardrail

Replace the paragraphs of section 15-3.01 with:

07-19-13

Section 15-3 includes specifications for removing all or a portion of a concrete facility.
Concrete facilities include curbs, gutters, gutter depressions, sidewalks, driveways, slope paving, island paving, barriers, retaining walls, sound walls, minor structures, aprons, spillways, and dams.
Where broken-concrete slope protection is shown, use removed concrete for the construction of the broken-concrete slope protection.
Instead of disposing of removed concrete by removing it from the job site, you may dispose of it on the job site by one of the following methods:

1. Burying it in embankments at authorized locations. Removed concrete must be broken into pieces that can be readily handled and incorporated into embankments and placed at a depth of at least 3 feet below finished grade and slope lines. Concrete must not be buried in areas where piling is to be placed or within 10 feet of trees, pipelines, poles, buildings or other permanent objects or structures.
2. Placing it at authorized locations. The removed concrete must not present an unsightly appearance from the highway.

Replace the paragraph of section 15-3.02 with:

07-19-13

Not Used

07-19-13

Delete the 5th paragraph of section 15-3.03.

Add to the end of section 15-4.01A(2):

04-19-13

Allow 20 days for review of the bridge removal work plan.

Replace the 2nd sentence of the 3rd paragraph of section 15-4.02C(1) with:

10-17-14

Paint exposed ends of the remaining reinforcement with 2 applications of organic zinc-rich primer as specified for painting exposed ends of prestressing steel in section 50-1.03B(3).

Replace the 1st paragraph of section 15-5.01C(1) with:

10-19-12

Before starting deck rehabilitation activities, complete the removal of any traffic stripes, pavement markings, and pavement markers.

Replace the 2nd and 3rd paragraphs of section 15-5.01C(2) with:

10-19-12

Perform the following activities in the order listed:

1. Abrasive blast the deck surface with steel shot. Perform abrasive blasting after the removal of any unsound concrete and placement of any rapid setting concrete patches.
2. Sweep the deck surface.
3. Blow the deck surface clean using high-pressure air.

DocuSign Envelope ID: 894511EA-295B-49EB-A393-D26A6837FDD4

Replace the 2nd paragraph of section 15-5.01C(4) with:

10-19-12

Before removing asphalt concrete surfacing, verify the depth of the surfacing at the supports and midspans of each structure (1) in each shoulder, (2) in the traveled way, and (3) at the roadway crown, if a crown is present.

04-19-13

Delete "and concrete expansion dams" in the 3rd paragraph of section 15-5.01C(4).

Replace the 2nd paragraph of section 15-5.03A(2) with:

10-19-12

For a contract with less than 60 original working days, submit certificates of compliance for the filler material and bonding agents.

Replace "51-1.02C" in the 1st paragraph of section 15-5.03B with:

04-19-13

51-1.02F

Replace the 4th paragraph of section 15-5.03B with:

10-19-12

For a contract with less than 60 original working days, alternative materials must be authorized before use.

Add between the 5th and 6th paragraphs of section 15-5.03C:

10-19-12

The final surface finish of the patched concrete surface must comply with section 51-1.03F.

10-19-12

Delete the 4th paragraph of section 15-5.05C.

Replace "51-1.03F(5)" in the 3rd paragraph of section 15-5.06C(1) with:

07-19-13

51-1.01D(4)(b)

Replace "51-1.03E(5)" in the 5th paragraph of section 15-5.06C(1) with:

10-19-12

51-1.03F(5)

10-19-12

Delete the 9th paragraph of section 15-5.06C(1).

04-19-13

Delete the 15th paragraph of section 15-5.06C(1).

DocuSign Envelope ID: 894511EA-295B-49EB-A393-D26A6837FDD4

Add between the 18th and 19th paragraphs of section 15-5.06C(1):

07-19-13

Texture the polyester concrete surface before gelling occurs by longitudinal tining under 51-1.03F(5)(b)(iii), except do not perform initial texturing.

Replace section 15-5.06C(2) with:

04-19-13

15-5.06C(2) Reserved

04-19-13

Delete the 3rd paragraph of section 15-5.06D.

Replace the 1st paragraph in section 15-5.07B(4) with:

10-19-12

Payment for furnishing dowels is not included in the payment for core and pressure grout dowel.

Replace section 15-5.09 with:

04-19-13

15-5.09 POLYESTER CONCRETE EXPANSION DAMS

15-5.09A General

Section 15-5.09 includes specifications for constructing polyester concrete expansion dams.
Polyester concrete expansion dams must comply with the specifications for polyester concrete overlays in section 15-5.06, except a trial slab is not required.
Reinforcement must comply with section 52.

15-5.09B Materials

Not Used

15-5.09C Construction

For new asphalt concrete overlays, place the asphalt concrete overlay before starting polyester concrete activities. Saw cut and remove asphalt concrete at expansion dam locations.
For existing asphalt concrete overlays, remove expansion dams and asphalt concrete to the limits shown. Removing expansion dams must comply with section 15-4 except a bridge removal work plan is not required.
Where a portion of the asphalt concrete overlay is to remain, saw cut a 2-inch-deep neat line along the edge to remain in place before removing the asphalt concrete. Do not damage the existing surfacing to remain in place.
Prepare the deck surface under section 15-5.01C(2).
You may use a mechanical mixer to mix the polyester concrete for expansion dams. The mixer capacity must not exceed 9 cu ft unless authorized. Initiate the resin and thoroughly blend it immediately before mixing it with the aggregate. Mix the polyester concrete for at least 2 minutes before placing.
The application rate of methacrylate resin must be approximately 100 sq ft/gal.
You may place and finish expansion dams using hand methods.
Protect expansion dams from moisture, traffic, and equipment for at least 4 hours after finishing.
For expansion dams over 6 feet long, install 1/4-inch-wide joint material at 6-foot intervals across the width of the expansion dam. Joint material must be either expanded polyurethane or expanded polyethylene.

DocuSign Envelope ID: 894511EA-295B-49EB-A393-D26A6837FDD4

15-5.09D Payment

Not Used

Add to section 15-6.01A(3)(a):

07-19-13

Within 5 days of completing annular space grouting at a culvert, submit the grouting records.

Replace "41-1.01" in item 10.3 in the list in the 2nd paragraph of section 15-6.01A(3)(d) with:

07-19-13

41-2

Replace "41-1.02" in 1st paragraph of section 15-6.01B(2) with:

07-19-13

41-2

Replace the heading of section 15-6.04 with:

01-18-13

INVERT PAVING

Replace the 1st paragraph of section 15-6.13A(1) with:

07-19-13

Section 15-6.13 includes specifications for installing machine spiral wound PVC pipeliners directly into the culvert.

Replace the heading of section 15-6.13B with:

07-19-13

Machine Spiral Wound PVC Pipeliners, Grouted

^^^

DocuSign Envelope ID: 894511EA-295B-49EB-A393-D26A6837FDD4

18 DUST PALLIATIVE

05-30-14

Replace section 18 with:

05-30-14

18 DUST PALLIATIVES

18-1.01 GENERAL

18-1.01A Summary

Section 18 includes specifications for applying dust palliatives.
The dust palliative must be any of the following:

1. Water
2. Dust suppressant
3. Dust control binder

Water must comply with section 17.

18-1.01B Definitions

Reserved

18-1.01C Submittals

If a dust suppressant or dust control binder is to be used, submit a dust treatment plan at least 15 days before starting job site activities. The dust treatment plan must include:

1. Product name and type
2. Manufacturer's name
3. Polymer emulsion type if synthetic polymer emulsion is used, including identification of:
   - 3.1. Individual components greater than 5 percent by volume in blends of polymers of different compositions
   - 3.2. Additives greater than 2 by volume
4. MSDS
5. Proposed methods for applying products
6. Application rates and number of passes
7. Required weather conditions for application, including ambient and surface temperatures, wind conditions, and allowable period before expected precipitation
8. Drying time or curing time required before traffic is allowed on the treated surface

Submit the manufacturer's instructions for the material to be used as an informational submittal.
Submit a certificate of compliance for the dust suppressant, dust control binders, and fibers.
For dust suppressants, include with the certificate of compliance:

1. Test results verifying compliance with the quality characteristic requirements in section 18-1.01D. The results must be from a test conducted within 6 months before the date of the certificate of compliance.
2. Test results from a test conducted within 2 years before the date of the certificate of compliance verifying compliance with the following environmental requirements:
   - 2.1. Maximum constituent concentration levels
   - 2.2. US EPA regulatory requirements for:
     - 2.2.1. Volatile organic compounds
     - 2.2.2. Semivolatile organic compounds
     - 2.2.3. Toxicity characteristic leaching
     - 2.2.3. Modified synthetic leaching procedure
   - 2.3. Aquatic toxicity

18-1.01D Quality Control and Assurance

Dust palliatives must comply with US EPA requirements and RWQCB requirements for soil stabilizers.

DocuSign Envelope ID: 894511EA-295B-49EB-A393-D26A6837FDD4

Dust suppressants must be tested by an EPA-accredited laboratory. Liquid chemical treatments must be tested before dilution. Solid products must be mixed with water to a 25 percent concentration before testing. The chemical constituent concentration for each dust suppressant must not exceed the maximum levels shown in the following table:

Maximum Constituent Concentration Levels

Constituent	Test method	Requirement maximum level (ppm)
Arsenic	EPA Method 200.7	5.0
Barium		100.0
Cadmium		0.2
Chromium		1.0
Copper		1.0
Lead		1.0
Mercury	EPA Method 245.1	0.05
Selenium	EPA Method 200.7	5.0
Zinc		10.0
Phosphorus	EPA Method 365.4	2500.0
Cyanide	EPA Method 335.4	0.2

Dust suppressants must comply with the US EPA requirements for the quality characteristics when tested under the test methods shown in the following table:

Quality characteristic	Test method
Volatile organic compounds (VOC)	EPA Method 8260
Semivolatile organic compounds (SVOC)	EPA Method 8270
Toxicity characteristic leaching procedure	EPA Method 1311
Modified synthetic leaching procedure	EPA Method 1312

The aquatic toxicity for dust suppressant must comply with the requirements shown in the following table:

Aquatic Toxicity Requirements

Quality characteristic	Test method	Requirement
Aquatic toxicity[a] (LC50 min, ppm)	ASTM E729 or EPA Method 600/4-90/027F and EPA Method 600/4-91/002	10
Aquatic toxicity[a] (rating)	ASTM E729 or EPA Method 600/4-90/027F and EPA Method 600/4-91/002	slightly toxic or better
Renewal toxicity[b] (LC50 min, ppm)	ASTM E1295	10
Renewal toxicity[b] (rating)	ASTM E1295	slightly toxic or better

[a]Using *Ceriodaphnia dubia* (water flea), *Oncorhynchus mykiss* (rainbow trout), *Pimephales promelas* (fathead minnow), and *Americamysis bahia* (mysid shrimp)
[b]Using *Ceriodaphnia dubia* (water flea)

18-1.02 MATERIALS

18-1.02A General

Dust suppressants and control binders must be either (1) miscible in water or (2) a material that is directly applied to the surface without mixing with water.

18-1.02B Dust Suppressants

18-1.02B(1) General

Dust suppressants must be one of the following:

DocuSign Envelope ID: 894511EA-295B-49EB-A393-D26A6837FDD4

1. Petroleum-based organic product
2. Nonpetroleum-based organic product
3. Hygroscopic product
4. Synthetic polymer emulsions

18-1.02B(2) Petroleum-Based Organic Products

Petroleum-based organic dust suppressants must be asphalt emulsion, petroleum resin, base oil, mineral oil, or synthetic fluid.
Asphalt emulsion must be Grade SS1h.
Petroleum resin must comply with the requirements shown in the following table:

Petroleum Resin Requirements

Quality characteristic	Test method	Requirement
Residue (min, %)	ASTM D6934	60
pH	ASTM D1429	4.0–7.0
Specific gravity at 16 °C (min)	ASTM D1298	1.00
Kinematic viscosity at 25 °C (min, Saybolt Furol seconds [a])	ASTM D2170	188
Flash point (min °C)	ASTM D92	205
Particle charge test	ASTM D7402	Positive

[a] Use ASTM D2161 to convert the mm^2/s value to Saybolt Furol seconds

Base and mineral oils must comply with the requirements shown in the following table:

Base and Mineral Oils Requirements

Quality characteristic	Test method	Requirement
Base and mineral oil content (min, %)	-	75
Specific gravity at 16 °C (min)	ASTM D1298	0.85–0.90
Brookfield absolute viscosity at 68 °C (max, cP)	ASTM D2196	250
Flash point (min, °C)	ASTM D93	150

Synthetic fluids must comply with 40 CFR 35 and the requirements shown in the following table:

Synthetic Fluids Requirements

Quality characteristic	Test method	Requirement
Base and mineral oil content (min, %)	--	75
Specific gravity at 16 °C (min)	ASTM D1298	0.85–0.90
Brookfield absolute viscosity at 68 °C (max, cP)	ASTM D2196	250
Flash point (min, °C)	ASTM D93	150

18-1.02B(3) Nonpetroleum-Based Organic Products

Nonpetroleum-based organic dust suppressants must be lignosulfonate, plant oil, or tall oil pitch rosin.
Lignosulfonate must comply with the requirements shown in the following table:

DocuSign Envelope ID: 894511EA-295B-49EB-A393-D26A6837FDD4

Lignosulfonate Requirements

Quality characteristic	Test method	Requirement
Lignin sulfonate content ready to use (min, %)	ASTM D4900	25
Residue total solids content (min %)	ASTM D4903 or D2834	52
Lignin sulfonate content of residue (min, %)	--	50
Reducing sugars content of residue (min, %)	ASTM D5896 or D6406	25
pH	ASTM D1293	6.0–9.0
Specific gravity (min)	ASTM D1429	1.20
Brookfield absolute viscosity at 25° C (max, cP)	ASTM D2196	1,000

Plant oil must comply with the requirements shown in the following table:

Plant Oil Requirements

Quality characteristic	Test method	Requirement
Residue active solids content (min, %)	ASTM D4903	50
Specific gravity (min)	ASTM D1429	0.93
Brookfield viscosity (cP)	ASTM D2196	48

Tall oil pitch rosin must comply with the requirements shown in the following table:

Tall Oil Pitch Rosin Requirements

Quality characteristic	Test method	Requirement
Rosin acid content (min, %)	ASTM D1240	10
Residue active solids content (min, %)	ASTM D2834	45
pH	ASTM D1293	3.0–9.0
Specific gravity (min)	ASTM D1429	1.00
Brookfield absolute viscosity at 25 °C (cP)	ASTM D2196	50–200

18-1.02B(4) Hygroscopic Products

Hygroscopic dust suppressants must be calcium chloride, calcium chloride flake, or magnesium chloride.

Calcium chloride must comply with the requirements shown in the following table:

Calcium Chloride[a] Requirements

Quality characteristic	Test method	Requirement
Calcium chloride content (%)	ASTM E449	28–42
Total magnesium as $MgCl_2$ (max, %)	ASTM E449	6.0
Total alkali chlorides as NaCl (max, %)	ASTM E449	6.0
Calcium hydroxide content (max, %)	ASTM E449	0.2
pH with 5 percent solution	ASTM D1293	7.0–9.0
Specific gravity	ASTM D1429	1.28–1.44

[a]ASTM D98 or AASHTO M144

Calcium chloride flake must comply with the requirements shown in the following table:

DocuSign Envelope ID: 894511EA-295B-49EB-A393-D26A6837FDD4

Calcium Chloride Flake[a] Requirements

Quality characteristic	Test method	Requirement
Calcium chloride content (%)	ASTM E449	28–42
Total magnesium as $MgCl_2$ (max, %)	ASTM E449	6.0
Total alkali chlorides as NaCl (max, %)	ASTM E449	6.0
Calcium hydroxide content (max, %)	ASTM E449	0.2
pH with 5 percent solution	ASTM D1293	7.0–9.0
Gradation percent passing 3/8–inch sieve #4 sieve #30 sieve	ASTM C136	 100 80–100 0–5

[a]ASTM D98 or AASHTO M144

Magnesium chloride must comply with the requirements shown in the following table:

Magnesium Chloride Requirements

Quality characteristic	Test method	Requirement
Magnesium chloride content (%)	ASTM D4691 or ASTM D511[a]	28–33
Sulfate content as magnesium sulfate (max, %)	ASTM D4691[a]	4.0
Potassium content as potassium chloride (max, %)	ASTM E449	0.5
Sodium chloride content (max, %)	ASTM E449	1.0
pH with 5% solution	ASTM D1293	7.0–9.0
Specific gravity	ASTM D1429	1.31 ± 0.02

[a]You may use another appropriate atomic absorption spectrophotometry method such as that in *Standard Methods for the Examination of Water and Waste Water* by APHA-AWWA-WPCF.

18-1.02B(5) Synthetic Polymer Emulsions

Synthetic polymer emulsions must comply with the requirements shown in the following table:

Synthetic Polymer Emulsion Requirements

Quality characteristic	Test method	Requirement
Residue active solids content (min, %)	ASTM D2834	40
pH	ASTM D1429	4.0–9.5
Specific gravity at 16 °C	ASTM D1298	1.00–1.15
Brookfield absolute viscosity (max, cP)	ASTM D2196	1,000
Polymer film tensile strength – dry (psi)	ASTM D412	500
Retained coagulum on #100 sieve (max, %)	ASTM D1417	0.1
Ash content (max, %)	ASTM D5040	2

18-1.02C Dust Control Binders

Dust control binders must comply with the specifications for a general purpose tackifier in section 21-1.02F(1).

Fibers must comply with section 21-1.02E.

DocuSign Envelope ID: 894511EA-295B-49EB-A393-D26A6837FDD4

18-1.03 CONSTRUCTION

18-1.03A General

Monitor dust conditions and apply dust palliative for dust control as described and as ordered. Reapply dust palliative at any time to control dust.

Apply a dust suppressant to:

1. Temporary haul roads
2. Construction staging, material storage, and layout areas
3. Compacted soil or aggregate base roads or driveways
4. Paved surfaces

Apply a dust control binder to:

1. Rough–graded soils
2. Completed slopes
3. Soil stockpiles unless another practice is already used

Do not use a dust suppressant or dust control binder within 100 feet of a wetland or body of water.

18-1.03B Equipment

Apply dust suppressants that are miscible in water with either (1) a pressure-type water distributor truck equipped with a spray system or (2) a pressure-type asphalt distributor truck as specified in section 93-1.03C.

Apply dust suppressant flakes to the surface using a spreader or spinner disk.

Apply dust control binders with either (1) a pressure-type water distributor truck equipped with a spray system or (2) hydraulic spray equipment as specified for applying hydromulch in section 21-1.03E.

18-1.03C Mixing and Application Rates

Use the mix proportions and application rate for the corresponding dust suppressant as shown in the following table:

Dust suppressant	Mix proportions	Application rate
Asphaltic emulsion, Grade SS1H	5 parts water to 1 part emulsion	0.20–1.0 gal/sq yd
Petroleum resin emulsion	5 parts water to 1 part emulsion	0.20–1.0 gal/sq yd
Base and mineral oil	Apply undiluted	0.30–0.35 gal/sy yd
Lignosulfonate	1 part water to 1 part concentrate	1.0 gal/sq yd
Plant oil	Apply undiluted	0.25–0.50 gal/sq yd
Tall oil pitch rosin	5 parts water to 1 part emulsion for clayey soil and 10 parts water to 1 part emulsion for sandy soil.	0.30–1.0 gal/sq yd
Calcium chloride solution (Hygroscopic)	Apply undiluted	0.20–0.35 gal/sq yd
Calcium chloride flakes (Hygroscopic)	--	1.0–1.5 lb/sq yd
Magnesium chloride (Hygroscopic)	Apply undiluted	0.30–0.50 gal/sq yd
Synthetic polymer emulsion	9 parts water to 1 part concentrate	0.50 gal/sq yd

Apply hygroscopic materials under the manufacturer's instructions.

Apply calcium chloride flakes to a moist surface.

DocuSign Envelope ID: 894511EA-295B-49EB-A393-D26A6837FDD4

Allow surfaces treated with a dust suppressant to cure before opening to traffic.
Use the mix proportions and application rate for the corresponding dust control binder as shown in the following table:

Dust control binder	Mix proportions	Application rate
Guar	11 to 15 pounds per 1,000 gallons of water	44–59 lb/acre
Psyllium	Enough water to allow for uniform slurry flow	80–200 lb/acre
Starch	Manufacturer's recommended mix proportions with water	150 lb/acre
Liquid acrylic copolymers and polymers[a]	10 parts water to 1 part polymer	1,175 gal/acre
Liquid methacrylate and acrylate polymers	Manufacturer's recommended mix proportions with water	20 gal/acre
Copolymers of sodium acrylates and acrylamides	Manufacturer's recommended mix proportions with water	3–10 lb/acre
Polyacrylamide and copolymer of acrylamide	10 pounds per 1,000 gallons of water	5 lb/acre
Hydro-colloid polymers	Manufacturer's recommended mix proportions with water	54–64 lb/acre

[a]Mix and handle the polymeric compound in a manner that will not cause foaming. You may add an antifoaming agent.

Do not allow stormwater runoff from polyacrylamide treated soils unless water passes through:
1. Sediment basin if the total drainage area is greater than or equal to 5 acres.
2. Sediment trap or a series of check dams if the total drainage area is less than 5 acres. Maximize the number of check dams used and space them evenly in the drainage channel so as to maximize sediment settlement.

You may add fibers to dust control binders at a rate of 2,000 lb/acre.
You may use reduced application rates when reapplying dust palliatives if authorized.

18-1.04 PAYMENT

Not Used

^^

19 EARTHWORK

10-17-14

Replace "20-3.03B(4)" in the 2nd paragraph of section 19-1.01A with:

07-19-13

20-2.02C(2)

Replace the 3rd paragraph in section 19-2.01A with:

07-19-13

Pavement removal within the limits of roadway excavation must comply with section 15-2.02B.

07-19-13

Delete the 2nd paragraph in section 19-2.03A.

DocuSign Envelope ID: 894511EA-295B-49EB-A393-D26A6837FDD4

Add to the 2nd paragraph of section 19-2.03D:

10-17-14

Topsoil must comply with section 21.

Replace the 2nd paragraph of section 19-3.01A(2)(b) with:

07-01-11

For cofferdams on or affecting railroad property, allow 85 days for review.

Add to the list in the 1st paragraph of section 19-3.01A(2)(d):

01-20-12

9. Provisions for discontinuous rows of soil nails

Replace "sets" in the 3rd and 4th paragraphs of section 19-3.01A(2)(d) with:

04-19-13

copies

Add to section 19-3.01A(3)(b):

01-20-12

For soil nail walls, wall zones are specified in the special provisions.
For ground anchor walls, a wall zone is the entire wall unless otherwise specified in the special provisions.

01-20-12

Delete the 2nd sentence in the 4th paragraph of section 19-3.01A(3)(b).

Replace "90" in the paragraph of section 19-3.02G with:

01-18-13

90-1

Add to section 19-3.02:

07-19-13

19-3.02I Filter Fabric

Filter fabric must be Class A.

Replace the heading of section 19-3.03C with:

04-19-13

19-3.03B(4) Cofferdams

Replace the heading of section 19-3.03D with:

04-19-13

19-3.03B(5) Water Control and Foundation Treatment

Replace the 1st paragraph of section 19-3.03E(3) with:

01-20-12

Compact structure backfill behind lagging of soldier pile walls by hand tamping, mechanical compaction, or other authorized means.

DocuSign Envelope ID: 894511EA-295B-49EB-A393-D26A6837FDD4

Add to the end of section 19-3.03E(3):

07-19-13

If filter fabric is shown behind the lagging:

1. Immediately before placing the filter fabric, remove any loose or extraneous material and sharp objects from the surface to receive the filter fabric.
2. Handle and place the filter fabric under the manufacturer's instructions. Stretch, align, and place the fabric without wrinkling.
3. Stitch the adjacent borders of filter fabric or overlap the adjacent borders by 12 to 18 inches. If stitching the border, use yarn of a contrasting color. Yarn size and composition must be as recommended by the fabric manufacturer. Use 5 to 7 stitches per inch of seam.
4. Repair any damaged filter fabric by placing a piece of filter fabric large enough to cover the damaged area and comply with the overlapping or stitching requirements.

Replace the 2nd paragraph of section 19-3.03F with:

01-20-12

Do not backfill over or place material over slurry cement backfill until 4 hours after placement. When concrete sand is used as aggregate and the in-place material is free draining, you may start backfilling as soon as the surface water is gone.

Add between the 2nd and 3rd paragraphs of section 19-3.03K:

01-20-12

Before you excavate for the installation of ground anchors in a wall zone:

1. Complete stability testing
2. Obtain authorization of test data

Replace the 2nd sentence of the 7th paragraph of section 19-3.03K:

01-20-12

Stop construction in unstable areas until remedial measures have been taken. Remedial measures must be submitted and authorized.

Add between the 8th and 9th paragraphs of section 19-3.03K:

01-20-12

When your excavation and installation methods result in a discontinuous wall along any soil nail row, the ends of the structurally completed wall section must extend beyond the ends of the next lower excavation lift by a distance equal to twice the lift height. Maintain temporary slopes at the ends of each wall section to ensure slope stability.

Replace the 9th paragraph of section 19-3.03K:

01-20-12

Do not excavate to the next underlying excavation lift until the following conditions have been attained for the portion of the soil nail or ground anchor wall in the current excavation lift:

1. Soil nails or ground anchors are installed and grouted.
2. Reinforced shotcrete facing is constructed.

01-18-13

3. Grout and shotcrete have cured for at least 72 hours.

01-20-12

4. Specified tests are complete for that portion of wall and the results are authorized.
5. Soil nail facing anchorages are attached or ground anchors are locked off.

DocuSign Envelope ID: 894511EA-295B-49EB-A393-D26A6837FDD4

Replace the 2nd sentence in the 7th paragraph of section 19-3.04 with:

01-18-13

Structure excavation more than 0.5 foot from the depth shown is paid for as a work-character change if you request an adjustment or the Engineer orders an adjustment.

Replace "Contract completion time" in the 8th paragraph of section 19-6.03D with:

10-19-12

work completion date

Add to section 19:

01-18-13

19-10–19-20 RESERVED

^^

20 LANDSCAPE

05-30-14

Replace the headings and paragraphs in section 20 with:

07-19-13

20-1 GENERAL

20-1.01 GENERAL

20-1.01A Summary

Section 20-1 includes general specifications for performing landscaping.
If an irrigation system is to be installed in an existing planting area to be maintained, check for plant deficiencies under section 20-3.02A(4) before starting irrigation work.
Perform a functional test for each irrigation system under 20-2.01A(4)(d):

1. Before planting the plants
2. After planting the plants
3. Before the start of the plant establishment work

If a plant is to be transplanted or an irrigation component is to be relocated, transplant plant or protect irrigation components before performing other construction activities in the area.
Perform roadside clearing:

1. As required to prepare the job site for construction work
2. Until the start of the plant establishment work or Contract acceptance, whichever comes first

20-1.01B Definitions

Reserved

20-1.01C Submittals

At least 15 days before applying any pesticide, submit a copy of the licensed pest control adviser's recommendation.
At the end of each week, submit a report documenting the application of all pesticides as an informational submittal. Use form *Report of Chemical Spray Operations*.
Before mixing a pesticide, submit a copy of the registered label for the pesticide as an informational submittal. If unable to copy, allow the Engineer to read the label on the container.

DocuSign Envelope ID: 894511EA-295B-49EB-A393-D26A6837FDD4

20-1.01D Quality Control and Assurance

20-1.01D(1) General

Obtain a recommendation from a licensed pest control adviser for the use of all pesticides under the Food & Agri Code. The recommendation must include the pesticides to be used, rates of application, methods of application, and application areas.
The pesticide applicator must have an active and valid qualified applicator license or certificate from the Department of Pesticide Regulation.

20-1.01D(2) Progress Inspections

The Engineer will perform progress inspections before:
1. Cultivating work starts
2. Pressure testing of irrigation pipe on the supply side of control valves
3. Testing of low voltage conductors
4. Planting work starts
5. Completion of planting work

Notify the Engineer at least 4 business days before each inspection is required. Allow at least 3 business days for the Engineer's inspection.
Unless otherwise authorized, do not proceed with the next construction activity until the inspection has been completed and any required corrective work has been performed and authorized.

20-1.02 MATERIALS

20-1.02A General

Reserved

20-1.02B Water

Water available from an existing Department-owned facility within the project limits or an irrigation system to be installed under the Contract is furnished at no charge.
If water is not available, make arrangements for supplying water. Water must be of a quality that will promote plant growth.

20-1.02C Pesticides

Pesticides must comply with the Department of Pesticide Regulation.
Insecticide must be imidacloprid.
Rodenticides must be brodifacoum, bromadiolone, or diphacinone.
Do not use oil or pelleted forms of pesticides for weed control.
For weed control, use a pesticide with a photosensitive dye that produces a contrasting color when sprayed on the ground. The color must disappear between 2 to 3 days after being applied. The dye must not stain surfaces or injure plants or wildlife when applied at the manufacturer's recommended application rate.

20-1.03 CONSTRUCTION

20-1.03A General

Take precautions to prevent irrigation water from:
1. Wetting vehicles, pedestrians, and pavement
2. Eroding soil

3. Causing excess runoff

Water plants under the Model Water Efficient Landscape Ordinance, 23 CA Code of Regs § 490 et seq., and local water agency requirements.
Water plants at night unless otherwise authorized.

DocuSign Envelope ID: 894511EA-295B-49EB-A393-D26A6837FDD4

Dispose of removed, pruned, and damaged vegetative material.
You may reduce removed vegetative material to chips with a maximum thickness of 1/2 inch and spread within the job site at locations determined by the Engineer. Chipped material must not be substituted for wood mulch, nor must the chipped material be placed within areas to receive wood mulch.

20-1.03B Pesticides

Notify the Engineer of pesticide application times at least 24 hours before each application.
Mix and apply pesticides under the requirements of the Department of Pesticide Regulation and the instructions on the pesticide product label.
Do not apply pesticides:

1. On Saturdays and holidays unless authorized
2. Whenever weather and wind conditions are unsuitable for application
3. Within the plant basin
4. On the foliage and woody parts of the plant

If a granular preemergent is used, it must be covered with mulch on the same work day. Do not apply granular preemergent in plant basins.
Do not apply preemergents:

1. To groundcover plants before the plants have been planted a minimum of 3 days and have been thoroughly watered
2. Within 18 inches of trees, shrubs, and seeded areas

20-1.03C Roadside Clearing

20-1.03C(1) General

Perform roadside clearing by:

1. Removing and disposing of trash and debris
2. Controlling the following pests:
   - 2.1. Rodents
   - 2.2. Insects
   - 2.3. Weeds
3. Removing existing plants as described

Control rodents by using rodenticides or traps.

20-1.03C(2) Remove Existing Plants

Remove existing plants as described. Removal of existing plants includes removing their stumps and roots 2 inches or larger in diameter to a minimum depth of 12 inches below finished grade. Backfill holes resulting from stump removal to finished grade with material obtained from adjacent areas.
If a plant is to be planted within existing groundcover area, remove existing groundcover from within an area 6 feet in diameter centered at each plant location.

20-1.03C(3) Weed Control

Control weeds by the use of pesticides, hand pulling, or mowing.
If pesticides are used to control weeds, apply pesticides before the weeds reach the seed stage of growth or exceed 4 inches in length, whichever occurs first. Do not use pesticides at cutting plant locations.
Where cuttings are to be planted, control weeds by hand pulling within an area 2 feet in diameter centered at each plant location.

DocuSign Envelope ID: 894511EA-295B-49EB-A393-D26A6837FDD4

If weeds are to be controlled by hand pulling, hand pull weeds before they reach the seed stage of growth or exceed 4 inches in length, whichever occurs first.
Where liner, plug, or seedling plants are to be planted 10 feet or more apart, control weeds by the use of pesticides or hand pulling within an area 2 feet in diameter centered at each plant location.
Where liner, plug, or seedling plants are to be planted less than 10 feet apart, control weeds by the use of pesticides within the entire area.
Control weeds by mowing outside of mulched areas, plant basins, groundcover areas, and within areas to be seeded. Mowing must extend to the edges of pavement, dikes, curbs, sidewalks, walls, and fences.
If mowing is to be performed within areas to be seeded, perform mowing as needed until the start of the seeding operation specified in section 21.
Mowing must be performed before the weeds reach the seed stage of growth or exceed 6 inches in length, whichever occurs first. Mow weeds to a height of 3 inches.

20-1.03C(4) Disposal of Removed Groundcover, Weeds, and Mowed Material

Dispose of hand pulled weeds the same day they are pulled. Dispose of removed groundcover within 3 days.
Dispose of mowed material from the initial mowing. Disposal of material from subsequent mowing is not required.

20-1.03D Cultivation

Cultivation must be by mechanical methods and performed until the soil is in a loose condition to a minimum depth of 6 inches. Soil clods must not be larger than 2 inches in maximum dimension after cultivation.
The areas to be cultivated must extend 12 inches beyond the outer limit of each planting area requiring cultivation.
After initial cultivation, place soil amendment and fertilizer at specified rates.
Recultivate to thoroughly mix native soil and amendments.
Do not drive on cultivated areas after cultivation.
Planting areas that have been cultivated and become compacted must be recultivated.
Rocks and debris encountered during soil preparation in planting areas must be brought to the surface of the ground.
Remove rocks and debris as ordered. This work is change order work.

20-1.03E Weed Germination

Reserved

20-1.04 PAYMENT

Items paid for by area are measured parallel to the ground surface.
Planting areas that do not require cultivation but are within the cultivation areas will not be deducted.

20-2 IRRIGATION

20-2.01 GENERAL

20-2.01A General

20-2.01A(1) Summary

Section 20-2 includes specifications for installing irrigation systems.
The irrigation systems shown are diagrammatic.

20-2.01A(2) Definitions

Reserved

DocuSign Envelope ID: 894511EA-295B-49EB-A393-D26A6837FDD4

20-2.01A(3) Submittals

20-2.01A(3)(a) General

Submit shop drawings for the electrical components of the irrigation system except electrical service 30 days before installation. The drawings must:

1. Include schematic wiring diagrams showing wire sizes and routes between electrical components
2. Show conduit sizes
3. Bear the written approval of the controller manufacturer or the manufacturer's authorized agent
4. Be accompanied by:
   - 4.1. Colored wire and splice samples
   - 4.2. Manufacturer's descriptive and technical literature

After the work shown on the drawing is complete, submit 3 copies of the as-built shop drawings including any wire modifications for each controller installed.
For each controller, laminate and place in an envelope 1 copy of:

1. As-built schematic wiring diagram including wiring modifications
2. 11 by 17 inches as-built irrigation plan

The laminate must be clear, mat-finished plastic that is at least 10 mils thick. The envelope must be heavy-duty plastic.
Attach the envelope to the inside of the controller enclosure or cabinet door. If the door is not large enough to secure the envelope, submit the envelope and its contents.

20-2.01A(3)(b) Manufacturer's Instructions

Submit as an informational submittal the manufacturer's installation instructions 15 days before installing:

1. Couplings for conduits used for irrigation conduits
2. Plastic pipe and fittings
3. Solvent cement for plastic pipe and flexible hose
4. Sprinklers
5. Flow sensors

20-2.01A(3)(c) Maintenance and Operation Manuals

Before Contract acceptance, submit as an informational submittal a manufacturer's maintenance and operation manual for each type of controller installed.

20-2.01A(4) Quality Control and Assurance

20-2.01A(4)(a) General

Reserved

20-2.01A(4)(b) Pressure Testing

20-2.01A(4)(b)(i) General

Perform pressure testing for leakage on irrigation supply lines:

1. In the Engineer's presence
2. On business days between 8 a.m. and 5 p.m. unless authorized
3. Before backfilling supply line trenches
4. With irrigation system gate valves open
5. With open ends of the supply line and fittings plugged or capped

Notify the Engineer at least 48 hours before performing a pressure test.
Choose either Method A or B to test supply lines installed by trenching and backfilling and supply lines that are completely visible after installation.

DocuSign Envelope ID: 894511EA-295B-49EB-A393-D26A6837FDD4

All other supply lines, including those installed in the ground by methods other than trenching and backfilling must be tested by Method A.

Test irrigation supply line in conduit by Method A with the testing period modified to 0.5 hour and no allowable pressure drop.

20-2.01A(4)(b)(ii) Method A

Method A pressure testing procedures for leakage must comply with the following:

1. Pressure gauge must be calibrated from 0 to 200 psi in 5 psi increments and be accurate to within a tolerance of 2 psi.
2. Supply line must be filled with water and connected to a pressure gauge. Place the pipeline under a pressure of 125 psi. Remove the source of pressure and leave the line under the required pressure.
3. Test the supply line under the required pressure for a period of 1 hour. The pressure gauge must remain in place until each test period is complete.
4. Leaks that develop in the tested portion of the system must be located and repaired after each test period if a drop of more than 5 psi is indicated by the pressure gauge. After the leaks have been repaired, repeat the 1 hour pressure test until the drop in pressure is 5 psi or less.

If a system consists of a new supply line connected to an existing line, the new supply line must be isolated from the existing line and tested.

20-2.01A(4)(b)(iii) Method B

Method B pressure testing procedures for leakage must comply with the following:

1. Before any portion of the supply line on the upstream side of a control valve is backfilled, water must be turned on for that portion of the line and maintained at full pressure from the water source for a period not less than 8 consecutive hours after all air has been expelled from the line. Before any portion of the supply line on the downstream side of the control valve is backfilled, perform the same test for a period not less than 1 hour.
2. Repair leaks that develop in the tested portion of the system. After the leaks have been repaired, repeat the pressure test until no leaks occur as determined by the Engineer.

20-2.01A(4)(c) Sprinkler Coverage Check

After installation of the sprinklers, check and adjust the entire sprinkler system for proper orientation and uniform coverage.

20-2.01A(4)(d) Irrigation System Functional Tests

The functional tests for each irrigation controller or group of controllers and associated irrigation system served by a single electric service point must consist of at least 1 complete cycle of operation. The Engineer determines the length of the cycle.

Notify the Engineer at least 10 days before performing each functional test.

20-2.01A(4)(e) Final Irrigation System Check

Perform the final check of the existing and new irrigation system between 20 and 30 days before Contract acceptance. The Engineer determines the length of the cycle.

Remote control valves connected to existing and new irrigation controllers must be checked for automatic operation when the controllers are in automatic mode.

20-2.01B Materials

20-2.01B(1) General

Use minor concrete for replacing removed concrete facilities.

HMA for replacing removed asphalt concrete surfacing and facilities must comply with section 39. You may use minor HMA if authorized.

20-2.01B(2) Garden Valves

Each garden valve must:

1. Be inverted nose type and of brass or bronze construction with female thread inlet

DocuSign Envelope ID: 894511EA-295B-49EB-A393-D26A6837FDD4

2. Have a replaceable seat washer, rising valve stem within a protective collar, and male thread hose outlet
3. Have a loose key handle

20-2.01B(3) Recycled Water Identification

Irrigation components used for recycled water must be manufactured or painted purple. Recycled water irrigation pipe and tubing must have a permanent label with the wording "CAUTION RECYCLED WATER" every 24 inches in 2 rows spaced approximately 180 degrees apart in the longitudinal direction of the pipe or tubing.
The recycled water warning sign must be a decal or a decal attached to a 1/16-inch thick aluminum plate or tag.
Each warning sign decal must:

1. Show the phrase "Recycled Water, Do Not Drink" and the drinking glass graphic symbol
2. Be UV fade and weather resistant and manufactured from flexible vinyl with or without mylar
3. Have a purple background, black text, and self-adhesive backing

Each warning tag must:

1. Show the phrase "RECYCLED WATER" and the drinking glass graphic symbol
2. Be UV fade and weather resistant
3. Be purple, double-sided, and manufactured from polyurethane
4. Have an integral neck attachment and attachment hole capable of withstanding 178 lb of pull-out resistance
5. Have hot-stamped black lettering

Posts and hardware for warning signs must comply with section 56-4.
Concrete sprinkler protectors used with recycled water must be painted purple.

20-2.01B(4) Location Markers

Location markers must be schedule 40 white PVC plastic pipe.

20-2.01B(5) Pull Boxes

Pull boxes must comply with section 86-2.06 and be no. 5 or larger unless otherwise shown. Pull boxes for low voltage conductors must not have side openings.
Pull box covers used solely for irrigation electrical service must be marked "IRRIGATION".

20-2.01B(6) Unions

Unions must be brass or malleable iron capable of withstanding the maximum required working pressure.

20-2.01B(7) Valve Boxes and Covers

Valve boxes must be precast concrete.
Covers must be:

1. Concrete, steel, or cast iron.
2. Marked "WATER" in cast-in letters not less than 1 inch high.
3. 1 piece, except 2 pieces are required when the weight of the valve box cover exceeds 35 lb.

The valve box covers must include a polyurethane label with the appropriate controller letter and station number as shown.

20-2.01B(8) Wye Strainers

Wye strainers must:

1. Have a cast iron or all bronze body
2. Have a removable stainless steel strainer screen:
   2.1. With an open area equal to at least 3 times the cross-sectional area of the pipe based on an iron pipe size

DocuSign Envelope ID: 894511EA-295B-49EB-A393-D26A6837FDD4

2.2. With 40-mesh woven wire, except:
2.2.1. For a backflow preventer assembly, the screen must be 20-mesh woven wire mesh or perforated sheet with 0.045-inch diameter holes
2.2.2. For a valve assembly, the screen must be 80-mesh woven wire mesh

3. Be capable of withstanding a working pressure of 150 psi
4. Be equipped with a garden valve at the outlet

The wye strainer filter housing must:
1. Withstand a working pressure of 150 psi
2. Be manufactured of reinforced polypropylene plastic

20-2.01C Construction

20-2.01C(1) General

05-30-14

Immediately shut off water to broken supply lines, valves, or sprinkler assemblies. Repair irrigation systems within 24 hours after a malfunction or damage occurs.

07-19-13

Connect underground metallic pipes, valves, or fittings made of dissimilar metals through a dielectric coupling or bushing.
You may install conduits, conductors, and supply lines by methods other than trenching provided that they are not damaged and are installed at the depths specified.

20-2.01C(2) Trenching and Backfilling

Trench and backfill under section 86-2.01.
Remove plants under 20-1.03C as necessary to perform trenching. If plants are to remain, adjust trench alignment to minimize damage.
If removal of:
1. Turf is required, remove to a maximum width of 12 inches.
2. Groundcover is required, remove to a maximum width of 6 feet. Existing *Carpobrotus* and *Delosperma* may be rototilled if the backfill for the trenches does not contain plants longer than 6 inches in length.

Make a 2-inch deep sawcut along neat lines around the perimeter of the pavement to be removed at locations determined by the Engineer.
The trench must have uniform bearing throughout the entire length and must be free of jagged rubble or sharp objects. Ensure conduit, supply line, and joints are not moved or damaged by backfill operations.
For a project with multiple water service points, excavate and backfill trenches for 1 service point at a time.

11-15-13

Trenches for irrigation supply lines and conduits 3 inches and larger must be 5 times the pipe or conduit diameter deep and 2 times the pipe or conduit diameter wide.
Trenches for irrigation supply lines and conduits 2-1/2 inches or less in diameter must be a minimum of 12 inches below finished grade, measured from the top of the installed pipe.

07-19-13

Trenches must be at least 4 feet from curbs, dikes, and paved shoulders.
Rocks and debris encountered during trenching operations must be brought to the surface of the ground. Remove rocks and debris as ordered. This work is change order work.
If trenching requires the removal of plants, in areas with:
1. Turf, replace turf with sod under section 20-3.03C(3)(e).

DocuSign Envelope ID: 894511EA-295B-49EB-A393-D26A6837FDD4

2. Groundcover, replace groundcover plants from flats and plant at 12 inches on center under section 20-3.03C. No replacement of *Carpobrotus* and *Delosperma* is required if removed by rototilling.

11-15-13

Where existing surfacing is removed, replace the structural section to match the materials removed. Replacement concrete must be of uniform smoothness, color, and texture equal to the adjacent concrete surface. Dispose of removed material. Install supply line and conduits at the bottom of trenches and backfill with sand to a depth of 2 inches over the top of the supply lines and conduits. Excluding the part of the trench backfilled with surfacing or pavement, the remainder of the trench must be backfilled with material that is excavated from the trench. Rock, broken concrete, asphalt concrete and other particles larger than 2 inches in greatest dimension must not be used.

07-19-13

20-2.01C(3) Pull Boxes

Install pull boxes under section 86-2.06 at the following locations:

1. At all conductor splices except splices made in valve boxes
2. Within 5 feet of irrigation controllers
3. At ends of electrical conduits
4. At other locations shown

20-2.01C(4) Valve Boxes and Covers

Install and identify each valve box as shown.

In walkways and paved areas, install the top of the valve box flush with the surrounding finished grade.

20-2.01C(5) Recycled Water Warning Signs

Install recycled water warning signs on irrigation facilities using recycled water.

Install sign decals directly to clean, smooth surfaces. Clean the surface with alcohol or an equivalent cleaner before applying the decal.

Install a 4 by 4 inch warning sign decal to each:

1. Backflow preventer assembly
2. Irrigation controller enclosure cabinet door

Install a 2 by 2 inch warning tag to the each remote control valve and valve box cover.

Install a 2-1/2 by 3 inches sign decal to each sprinkler riser.

Under local regulations, install a 12 by 12 inch warning sign decal on an aluminum plate and attach to gates, fences, and walls located in the vicinity of a recycled water irrigation system. On gates and fences, install signs with S hooks and C clips or 14-gauge galvanized steel wire. On concrete walls or other rough surfaces, install signs with a silicon-based adhesive.

20-2.01C(6) Garden Valves

Furnish 3 keys for each garden valve before Contract acceptance.

20-2.01D Payment

Not Used

20-2.02 EXISTING IRRIGATION FACILITIES

20-2.02A General

20-2.02A(1) Summary

Section 20-2.02 includes specifications for checking, testing, operating, replacing, and relocating existing irrigation facilities.

20-2.02A(2) Definitions

Reserved

DocuSign Envelope ID: 894511EA-295B-49EB-A393-D26A6837FDD4

20-2.02A(3) Submittals

Submit a list of irrigation system deficiencies within 7 days after checking the existing facilities.

20-2.02A(4) Quality Control and Assurance

After irrigation facilities have been relocated, demonstrate in the presence of the Engineer that the relocated facilities function properly.

Certify each existing backflow preventer under section 20-2.03A(4).

20-2.02B Materials

Valve box covers must be the same size as the covers they replace.

Control and neutral conductors must be the same size and color as the control and neutral conductors they replace.

20-2.02C Construction

20-2.02C(1) General

Notify the Engineer at least 4 business days before shutting off the water supply to any portion of the existing irrigation system and immediately after restoring the water supply to any portion of the existing irrigation system.

If an irrigation facility to be relocated is determined unsuitable by the Engineer, replace irrigation facility under section 20-2. This work is change order work.

20-2.02C(2) Check and Test Existing Irrigation Facilities

Before performing irrigation system work, check existing irrigation facilities to remain in place or to be relocated. The Engineer determines the test watering cycle lengths. Check for deficiencies including missing parts, damaged components, and improper operation. Correct deficiencies as ordered. The correction of deficiencies is change order work.

20-2.02C(3) Operate Existing Irrigation Facilities

If the Contract includes a bid item for operate existing irrigation facilities, after performing work under section 20-2.02C(2), operate existing irrigation facilities through Contract acceptance.

Operate existing irrigation facilities except for water meters, underground supply lines, control and neutral conductors, and electrical conduits.

Check for proper operation at least once every 30 days. Adjust, repair, or replace existing irrigation facilities within 7 days of finding any deficiency.

Operate irrigation systems using the automatic irrigation controller until Contract acceptance. You may operate irrigation controllers manually during plant replacement, fertilization, weed germination, and repair work.

Program the irrigation controllers for seasonal requirements.

20-2.02C(4) Replace Valve Box Covers

Existing valve box covers shown to be replaced must remain in place until the new covers are ready to be installed.

Dispose of removed valve box covers.

20-2.02C(5) Relocate Backflow Preventer Assemblies

Relocate backflow preventer assembly as shown and install under section 20-2.03C.

20-2.02C(6) Relocate Water Meters

Relocate water meter as shown.

20-2.02C(7) Relocate Irrigation Controllers

Relocate irrigation controller as shown and install under section 20-2.07C.

20-2.02D Payment

Not Used

DocuSign Envelope ID: 894511EA-295B-49EB-A393-D26A6837FDD4

20-2.03 BACKFLOW PREVENTER ASSEMBLIES

20-2.03A General

20-2.03A(1) Summary

Section 20-2.03 includes specifications for installing a backflow preventer assembly.

20-2.03A(2) Definitions

Reserved

20-2.03A(3) Submittals

Reserved

20-2.03A(4) Quality Control and Assurance

Each backflow preventer assembly must be certified by a backflow preventer tester. The tester must have an active and valid certification from the water purveyor having jurisdiction.
If the local water purveyor does not have a certification program, the tester must be certified by AWWA or a nearby county with a certification program.
Notify the Engineer at least 5 business days before certifying backflow preventer assembly.
Certify each backflow preventer assembly annually and within 10 days before Contract acceptance.

20-2.03B Materials

20-2.03B(1) General

Each backflow preventer assembly must include:

1. Backflow preventer including gate valve, wye strainer, brass or malleable iron unions, fittings, and supports
2. Blanket
3. Enclosure
4. Concrete pad

Concrete for the pad must be minor concrete, except the concrete must not contain less than 463 pounds of cementitious material per cubic yard. Hand mixing of the concrete is allowed.

20-2.03B(2) Backflow Preventers

Each backflow preventer must:

1. Be reduced-pressure principle type.
2. Comply with the requirements of the water purveyor that has jurisdiction.
3. Be factory-assembled with:
   - 3.1. 2 check valves
   - 3.2. 1 pressure differential relief valve
   - 3.3. 4 test cocks
   - 3.4. 2 shut-off valves manufactured from iron or bronze. Shut-off valves must be one of the following:
     - 3.4.1. Resilient wedge gate valves
     - 3.4.2. Resilient seated and fully ported ball valves
     - 3.4.3. Resilient seated butterfly valves

Backflow preventer components must be capable of withstanding a working pressure of 150 psi.

20-2.03B(3) Backflow Preventer Blankets

Each backflow preventer blanket must:

1. Be polyester fabric coated with vinyl or polymeric resin
2. Be resistant to UV light, water, mildew, and fire
3. Have an R-value from R-30 to R-38

DocuSign Envelope ID: 894511EA-295B-49EB-A393-D26A6837FDD4

Blankets must have a securing mechanism that includes either zippers, hook-pile tape, grommets, snaps, buttons, or any combination of these. Wherever the backflow preventer is not in an enclosure, the securing mechanism must be capable of accepting a padlock.

20-2.03B(4) Backflow Preventer Enclosures

Each backflow preventer enclosure must:

1. Have expanded metal sides, ends, and top panels fabricated from 9-gauge minimum thickness stainless sheet steel with openings of approximately 3/4 by 1-3/4 inches
2. Have expanded metal panels attached to the 3/16-inch thick steel frame by a series of welds not less than 1/4 inch in length and spaced not more than 4 inches on center, along the edges of the enclosure
3. Have Type 304 stainless steel lock guards with a minimum thickness of 12 gauge.
4. Have hexagonal nuts and lock-type washers
5. Be powder coated by the manufacturer to match color no. 20450 of FED-STD-595.
6. Have padlock clasp or latch and lock mechanism

20-2.03C Construction

Finish exposed top surfaces of concrete pad with a medium broom finish applied parallel to the long dimension of pads.

Install hold-downs for the backflow preventer assembly enclosure when concrete is still plastic.

20-2.03D Payment

Not Used

20-2.04 CAM COUPLER ASSEMBLIES

20-2.04A General

Section 20-2.04 includes specifications for installing a cam coupler assembly.

20-2.04B Materials

Each cam coupler assembly must consist of a cam coupler, dust cap, check valve, pipes, fittings, concrete thrust block, and valve box with woven wire cloth and gravel.

Cam couplers and keys must be manufactured of brass or bronze and be able to withstand a working pressure of 150 psi.

Furnish 3 loose cam coupler keys before Contract acceptance.

20-2.04C Construction

Install cam coupler assemblies in valve boxes as shown.

20-2.04D Payment

Not Used

20-2.05 CONTROL AND NEUTRAL CONDUCTORS

20-2.05A General

20-2.05A(1) Summary

Section 20-2.05 includes specifications for installing control and neutral conductors.

20-2.05A(2) Definitions

Reserved

20-2.05A(3) Submittals

Reserved

20-2.05A(4) Quality Control and Assurance

Perform field tests on control and neutral conductors. Field tests must comply with the specifications for lighting circuits in section 86-2.14B.

DocuSign Envelope ID: 894511EA-295B-49EB-A393-D26A6837FDD4

Where the conductors are installed by trenching and backfilling, perform field tests after a minimum of 6 inches of backfill material has been placed and compacted over the conductors.

20-2.05B Materials

Control and neutral conductors must comply with the requirements in section 86-2.08.

For connections between 24-volt irrigation controllers and valve solenoids, use control and neutral conductors. Conductors must include a control conductor for each valve and a common neutral.

Conductor insulation color, except for the stripes, must be continuous throughout. The color of the conductors must be consistent from the controller to each valve. Neutral conductors must be white. Do not use white for control conductors. Do not use conductors with green insulation except as permitted by the NEC.

Conductors must be:

1. No. 12 AWG or larger or no. 14 AWG or larger for armor-clad
2. Rated for 36 V or 600 V for armor-clad
3. Rated for direct burial
4. Underground feeder cable Type UF and TWU
5. Solid, uncoated copper for armor-clad
6. Not less than 90 percent of the AWG diameter required

No. 10 and smaller conductors must be insulated with a minimum of 56 mils of PVC or a minimum of 41 mils of polyethylene. No. 8 and larger conductors must be insulated with a minimum of 70 mils of PVC.

No. 10 and smaller armor-clad conductors must be insulated with a minimum of 41 mils of polyethylene. No. 8 and larger armor-clad conductors must be insulated with 54 to 60 mils of PVC.

Armor-clad conductors must include:

1. Stainless steel tape armor, Type 304 and helically wrapped with a 33 percent minimum overlap. The tape must be 0.5 inch wide and at least 0.005 inch thick.
2. PVC outer conductor jacket that is UV resistant and complies with the ICEA S-61-402, NEMA standard WC5 and UL listing 1263. The jacket nominal thickness must be 24 to 30 mils thick.

20-2.05C Construction

20-2.05C(1) General

Reserved

20-2.05C(2) In Open Trenches

Do not install control and neutral conductors above each other in an open trench. Wrap conductors together with electrical tape at 5 foot intervals.

Where conductors are installed in the same trench as supply line, install at the same depth as the line. At other locations, install conductors not less than 12 inches below finished grade.

Where conductors are not in a supply line trench, install conductors at least 4 feet from curbs, dikes, and paved shoulders.

20-2.05C(3) In Conduits

Install conductors in electrical conduit if conductors are to be:

1. Surface mounted
2. Installed in or on structures
3. Installed under paved areas
4. Installed in irrigation conduits
5. Placed in concrete

DocuSign Envelope ID: 894511EA-295B-49EB-A393-D26A6837FDD4

20-2.05C(4) Splicing

Splice low voltage control and neutral conductors under sections 86-2.09C, 86-2.09D, and 86-2.09E, except do not use method B. Tape used for splice insulation must be PVC tape.
Leave at least 2 feet of slack for each conductor at each:

1. Pull box
2. Valve box for each conductor that is connected to other facilities within the box or spliced within the box

Do not splice conductors in irrigation controller cabinets.
Permanent splice connections must be made with freshly cut and skinned conductors. Do not use temporary splices made for testing valve circuits as permanent splices.

20-2.05C(5) Marking

Mark control and neutral conductors in pull boxes, valve boxes, at irrigation control terminals, and at splices.
Mark conductor terminations and splices with adhesive cloth wrap-around markers. Seal markers with clear, heat-shrinkable sleeves.
Mark nonspliced conductors with clip-on C-shaped white extruded PVC sleeves. Sleeves must have black indented legends of uniform depth with transparent overlays over the legends and chevron cuts for the alignment of 2 or more sleeves.
Identify markers for the control conductors with the appropriate irrigation controller and station number.

20-2.05D Payment

Not Used

20-2.06 FLOW SENSORS

20-2.06A General

Section 20-2.06 includes specifications for installing a flow sensor.

20-2.06B Materials

Each flow sensor must be an inline type with a nonmagnetic spinning impeller as the only moving part.
The electronics housing must:

1. Be schedule 80 PVC or cast 85-5-5-5 bronze
2. Include glass-filled polyphenylene sulfide
3. Be easily removable from the meter body and include 2 ethylene-propylene O-rings

The impeller must be tungsten carbide.
The electronics must be rated to withstand prolonged water immersion conditions and include 2 single conductor 18 AWG leads, 48 inches long.
The insulation must be direct burial UF type colored red for the positive lead and black for the negative lead.
The flow sensor must be capable of withstanding:

1. 100 to 400 psi operating pressure depending on sensor size shown
2. Liquid temperatures up to 220 degrees F
3. Flows from 1/2 to 15 ft/sec

20-2.06C Construction

Install flow sensor as shown.

20-2.06D Payment

Not Used

DocuSign Envelope ID: 894511EA-295B-49EB-A393-D26A6837FDD4

20-2.07 IRRIGATION CONTROLLERS

20-2.07A General

20-2.07A(1) Summary

Section 20-2.07 includes specifications for installing irrigation controllers.

20-2.07A(2) Definitions

irrigation controller: "Smart" irrigation controller as defined by the Irrigation Association.

remote irrigation control system (RICS): Centralized water management system that consists of a base station, centralized server, satellite controllers.

base station: Designated computer located at a Department maintenance facility or District Office that collects data from a series of satellite controllers through a centralized server.

centralized server: Designated server or web-based application that collects data from all base stations.

web-based application: Encrypted managing software that is coded in a browser-supported language and is executable via a common internet web browser (e.g., Microsoft Internet Explorer, Firefox, Safari, etc.).

satellite controller: Irrigation controller that communicates directly to a base station or centralized server.

network communication: Identified means through which satellite controllers, base stations, and a centralized server communicate to one another (i.e., fiber optics, spread spectrum, phone line, etc.).

remote access device: Device (i.e., FCC compliant radio remote, cell phone or wireless, etc.) used to communicate with satellite controllers from a remote location.

20-2.07A(3) Submittals

Submit as an informational submittal, a complete manufacturer's maintenance and operations manual for each type of controller installed. Submit the manual at the time the wiring plans and diagrams are placed inside the controller enclosure or cabinet door.

20-2.07A(4) Quality Control and Assurance

Provide training by a qualified person on the use and adjustment of the irrigation controllers installed 30 days before Contract acceptance.

Modifications to electrical components must be done by the manufacturer before shipment to the job site.

The installation date and expiration date of the manufacturer's guarantee for the controllers must be permanently marked on the inside face of the controller.

20-2.07B Materials

20-2.07B(1) General

Conventional A/C powered irrigation controllers must operate on 110/120 V, 60 Hz(ac) and supply 24 to 30 VAC, 60 Hz(ac) for operating electrical remote control valves.

Concrete for the pad and foundation must be minor concrete, except the concrete must not contain less than 463 pounds of cementitious material per cubic yard. Hand mixing of the concrete is allowed.

20-2.07B(2) Irrigation Controllers

20-2.07B(2)(a) General

The irrigation controllers must:

1. Be A/C, battery, solar, or 2-wire as shown
2. Be from a single manufacturer.
3. Be fully automatic and capable of operating a complete 30-day or longer irrigation program.

DocuSign Envelope ID: 894511EA-295B-49EB-A393-D26A6837FDD4

4. Have a switch or button on the face of the irrigation control panel showing that the irrigation controller can be turned on or off and provide for automatic or manual operation. Manual operation must allow cycle start at the desired station and allow for the minimum activation of a single station or have the option to operate multiple stations in sequential or simultaneous operation modes.
5. Have non-volatile memory.
6. Have a watering time display on the face of the control panel.
7. Have a panel and circuit board connected to the low voltage control and neutral conductors by means of a plug and receptacle connectors located within the cabinet enclosure.
8. Have a variable or incremental timing adjustment ranging from 1 minute to 360 minutes per station.
9. Be capable of operating at least 3 program schedules.
10. Be capable of having at least 4 start times per program schedule.
11. Have an output that can energize a pump start circuit or a remote control master valve.
12. Be protected by fuses and circuit breakers.
13. Display a program and station affected by a sensory alert without altering other watering schedules not affected by the alert.
14. Be capable of global manual and automatic seasonal adjustments to all valves in any given program.
15. Automatically alter watering schedule in accordance with evapotranspiration data provided by a local weather station or have an internal programmed default of historical evapotranspirational data for a given region.
16. Support a flow sensor, rain sensor, or weather station and have automatic shut-off capability.
17. Be capable of communicating with the remote access device.

If the irrigation controller is installed in an enclosure cabinet, the cabinet must be stainless steel and must comply with section 86-3.04A.

Irrigation controllers not installed in enclosure cabinets must be weatherproof, constructed of fiberglass or metal and have a door lock with 2 keys provided.

RICS must meet the requirements of an irrigation controller and be capable of being accessible only through a secured and encrypted server that is password and firewall protected by the Department or be accessible through a firewall secure remote server that is independent from any Department servers. The Department will set up and manage the network communication.

20-2.07B(2)(b) Battery Powered Irrigation Controllers

Reserved

20-2.07B(2)(c) Solar Powered Irrigation Controllers

Reserved

20-2.07B(2)(d) Two-wire Irrigation Controllers

Reserved

20-2.07B(3) Irrigation Controller Enclosure Cabinets

The irrigation controller enclosure cabinet must:

1. Be stainless steel.
2. Include a mounting panel. Fabricate mounting panels with one of the following:
   - 2.1. 3/4-inch exterior AC grade veneer plywood. Paint panels with 1 application of an exterior, latex based, wood primer and 2 applications of an exterior, vinyl acrylic enamel, white in color. Paint panels on all sides and edges before installation of the panels in the cabinets and the equipment on the panels.
   - 2.2. 3/16-inch thick aluminum sheets.
   - 2.3. 10-gauge cold-rolled steel sheets.
   - 2.4. 0.157-inch stainless steel metal sheets.
3. Provide cross ventilation, roof ventilation, or a combination of both. Ventilation must not compromise the weather resistance properties of the cabinet and must be fabricated by the cabinet manufacturer.
4. Include protection against lightning damage.
5. Have an area inside the cabinet doors for storage of the as-built schematic wiring diagram and irrigation plans.

DocuSign Envelope ID: 894511EA-295B-49EB-A393-D26A6837FDD4

6. Have padlock clasp or latch and lock mechanism.

20-2.07B(4) Rain Sensors

A rain sensor unit must be a solid state, automatic shut-off type, and compatible with the irrigation controller. The rain sensor unit must automatically interrupt the master remote control valves when approximately 1/8 inch of rain has fallen. The irrigation controller must automatically be enabled again when the accumulated rainfall evaporates from the rain sensor unit collection cup.
Rain sensor units must be one of the following:

1. Rated 24 V(ac) to 30 V(ac)
2. Wireless and FCC compliant

20-2.07C Construction

Finish exposed top surface of concrete pad with a medium broom finish applied parallel to the long dimension.
Locate irrigation controllers in pedestal or wall mounted enclosures as shown.
Install electrical components for automatic irrigation systems under section 86-1.02.
Install irrigation controllers under the manufacturer's instructions and as shown.
If 2 or more irrigation controllers operate the same remote master control valve, furnish and install an isolation relay under the controller manufacturer's instructions.
Where direct burial conductors are to be connected to the terminal strip, connect the conductors with the open-end-crimp-on wire terminals. Exposed wire must not extend beyond the crimp of the terminal and the wires must be parallel on the terminal strip.
Install rain sensor units for irrigation controllers on the irrigation controller enclosure cabinets. Provide protection against lightning damage.

20-2.07D Payment

Payment for electrical service for 120-volt or higher is not included in the payment for irrigation controller.

20-2.08 IRRIGATION CONDUIT

20-2.08A General

20-2.08A(1) Summary

Section 20-2.08 includes specifications for installing irrigation conduit under a roadway or other facility to accommodate electrical conduit for control and neutral conductors and irrigation supply lines.
Before performing work on irrigation systems, locate existing conduits shown to be incorporated into the new work.
Before removing or disturbing existing Type A pavement markers that show the location of the existing conduit, mark the location of the existing conduit on the pavement.

20-2.08A(2) Definitions

Reserved

20-2.08A(3) Submittals

Reserved

20-2.08A(4) Quality Control and Assurance

Demonstrate the conduits are free of obstructions after placement of base and surfacing.
Before and after extending the irrigation supply line in a conduit, pressure test the supply line under section 20-2.01A(4)(b).
After conductors are installed in a conduit, test the conductors under section 20-2.05A(4).

DocuSign Envelope ID: 894511EA-295B-49EB-A393-D26A6837FDD4

Assign a technical representative to direct and control the directional bore activities. The representative must be present during directional bore activities. Unless otherwise authorized, perform directional bore activities in the presence of the Engineer.

20-2.08B Materials

20-2.08B(1) General

Reserved

20-2.08B(2) ABS Composite Pipe Conduit

ABS composite pipe and couplings must comply with ASTM D 2680. Couplings must be solvent cement type.

20-2.08B(3) Corrugated High Density Polyethylene Pipe Conduit

Corrugated high density polyethylene pipe must comply with ASTM F 405 and F 667 or be Type S and comply with AASHTO M252 and M294. Couplings and fittings must be as recommended by the pipe manufacturer.

20-2.08B(4) Corrugated Steel Pipe Conduit

Corrugated steel pipe conduit must comply with section 66. The nominal thickness of metal sheets for pipe must be 0.064 inch for corrugated steel pipe and 0.060 inch for corrugated aluminum pipe. Coupling bands and hardware must comply with section 66.

20-2.08B(5) Polyvinyl Chloride Pipe Conduit

PVC pipe conduit must be schedule 40 and comply with ASTM D 1785.
Fittings must be schedule 80.

20-2.08B(6) Welded Steel Pipe Conduit

Welded steel pipe must comply with ASTM A 53. Pipe must be black and have either welded or threaded joints.
The minimum wall thickness for the various sizes of welded steel pipe must comply with the dimensions shown in the following table:

Pipe size, nominal (inch)	Minimum wall thickness (inch)
3	0.216
4	0.237
6	0.280
8	0.277
10	0.279
12	0.330

20-2.08C Construction

20-2.08C(1) General

When existing conduits are to be incorporated in new work, excavate exploratory holes for locating existing conduits at the locations indicated by existing markers or as directed. Excavate and backfill exploratory holes to a maximum size of 2-1/2 feet in width, 5 feet in depth, and 5 feet on each side of the marker or directed location parallel to the roadway. If the conduit is not found and if ordered, increase the size of the exploratory holes beyond the dimensions specified. The additional excavation and backfill is change order work.
If extending an existing conduit, remove conductors from the conduit.
Use a coupling band if the new conduit matches the existing conduit diameter, otherwise overlap the conduit at least 12 inches.
After extending existing conduits, install conductors that match the color and size of the existing conductors without splices. Splice conductors in adjacent pull boxes.

DocuSign Envelope ID: 894511EA-295B-49EB-A393-D26A6837FDD4

If installing a control and neutral conductor and electrical conduit through the irrigation conduit, install a no. 5 pull box at each end.
Remove debris found in the conduit before performing other work. Debris found more than 3 feet from the ends of the conduits is removed as change order work.
Extend conduit 2 feet beyond all paving unless otherwise shown.
Cap the ends of unused conduit.
Designate the location of each conduit by cementing a Type A pavement marker as shown. Type A pavement markers and adhesive must comply with section 85.

20-2.08C(2) Welded Steel Pipe Conduit

20-2.08C(2)(a) General

Install welded steel pipe by directional boring or jack and drill.
Install top of conduits:
1. 18 to 30 inches below the finished surface in sidewalk areas
2. 40 to 52 inches below the finished grade in other paved areas

20-2.08C(2)(b) Directional Boring

Notify the Engineer 2 business days before starting directional bore activities.
The diameter of the boring tool for directional boring must be only as large as necessary to install the conduit.
Mineral slurry or wetting solution may be used to lubricate the boring tool and to stabilize the soil surrounding the boring path. The mineral slurry or wetting solution must be water based.
The directional bore equipment must have directional control of the boring tool and have an electronic boring tool location detection system. During operation, the directional bore equipment must be able to determine the location of the tool both horizontally and vertically.

20-2.08C(2)(c) Jack and Drill

Notify the Engineer 2 business days before starting jack and drill activities.
Jacking or drilling pits must be no closer than 2 feet from pavement edge whenever possible.
If authorized, small holes may be cut in the pavement to locate or remove obstructions.
Do not use excessive water that will soften subgrade or undermine pavement.

20-2.08C(3) Schedule 40 Pipe Conduit

Where schedule 40 pipe conduit 2 inches or less in outside diameter is installed under surfacing, you may install by directional boring under section 20-2.08C(2)(b).
For conduit 2 inches or less in diameter, the top of the conduit must be a minimum of 18 inches below surfacing.
Extend schedule 40 pipe conduit 6 inches beyond surfacing. Cap ends of conduit until used.

20-2.08D Payment

Schedule 40 PVC pipe conduit is paid for as plastic pipe (schedule 40) (supply line).

20-2.09 IRRIGATION SUPPLY LINE

20-2.09A General

20-2.09A(1) Summary

Section 20-2.09 includes specifications for installing irrigation supply line.
If the supply line location interferes with the excavation of plant holes, relocate the plant hole to clear the supply line. Do not install supply lines through plant holes unless shown.
Supply lines, control and neutral conductors and electrical conduits installed in common trenches must not be installed above each other.

DocuSign Envelope ID: 894511EA-295B-49EB-A393-D26A6837FDD4

20-2.09A(2) Definitions

Reserved

20-2.09A(3) Submittals

Submit a certificate of compliance for polyethylene pipe and plastic pipe supply line.

20-2.09A(4) Quality Control and Assurance

Solvent cement must comply with the local Air Quality Management District requirements.

20-2.09B Materials

20-2.09B(1) General

Irrigation supply pipe must be metal or plastic as shown.
PCC for thrust blocks must be produced from commercial-quality aggregates. The concrete must contain at least 295 pounds of cementitious material per cubic yard.

20-2.09B(2) Copper Pipe Supply Line

Copper pipe must be Type K rigid pipe and comply with ASTM B 88. Fittings must be wrought copper or cast bronze either soldered or threaded.
Solder must be 95 percent tin and 5 percent antimony.

20-2.09B(3) Galvanized Steel Pipe Supply Line

Galvanized steel pipe supply line and couplings must be standard weight and comply with ASTM A 53, except that the zinc coating must not be less than 90 percent of the specified amount. Except for couplings, fittings must be galvanized malleable iron, banded and threaded, and comply with ANSI B16.3, Class 150.
Joint compound must be nonhardening and noncorrosive. Do not use pipe thread sealant tape.

20-2.09B(4) Drip Irrigation Tubing

Drip irrigation tubing must be virgin polyethylene plastic and comply with ASTM D 2737.
The drip irrigation tubing must be distribution tubing with preinstalled in-line emitters.
If preinstalled in-line drip irrigation tubing is not shown, you may install emitters that match the distribution requirements shown. The emitters must be barbed or threaded-type outlet devices with dual silicone diaphragms and installed under the manufacturer's instructions.
The emitters must meet the flow rate and operating pressure range shown.
The wall thickness of polyethylene tubing must comply with the following requirements when tested under ASTM D 2122:

Pipe size, nominal (inch)	Minimum wall thickness (inch)	Maximum wall thickness (inch)
1/2	0.050	0.070
5/8	0.055	0.075
3/4	0.060	0.080

The polyethylene tubing fittings must be leak-free, compression type and have female sockets with an internal barb to provide a positive pipe-to-fitting connection that will not separate at the designed pressure.

20-2.09B(5) Plastic Pipe Supply Line

Plastic pipe supply line must be PVC pipe that is NSF approved.
Schedule 40 plastic pipe supply line must comply with ASTM D 1785.
Class 315 plastic pipe supply line must comply with ASTM D 2241.
PVC gasketed bell joints must comply with ASTM D 2672, ASTM D2241, ASTM D 3139, and ASTM F 477.

DocuSign Envelope ID: 894511EA-295B-49EB-A393-D26A6837FDD4

For solvent-cemented type joints, the primer and solvent cement must be made by the same manufacturer. The primer color must contrast with the color of the pipe and fittings.
Solvent-cemented fittings must be injection molded PVC, schedule 40, and comply with ASTM D 2466.
Fittings for supply line placed in irrigation conduit must be schedule 80.
Fittings for plastic pipe supply line larger than 4 inches must be ductile iron under section 20-2.14C(2)(b).
If UV-resistant plastic pipe supply line is required, the pipe must be homogeneous, uniform color and be manufactured of:

1. At least 80 percent vinyl chloride resin with UV stabilizers
2. Non-PVC resin modifiers and coloring ingredients
3. Coloring ingredients with UV stabilizers

20-2.09C Construction

20-2.09C(1) General

Cut pipe straight and true. After cutting, ream out the ends to the full inside diameter of the pipe.

05-30-14

Prevent foreign material from entering the irrigation system during installation. Immediately before assembling, clean all pipes, valves, and fittings. Flush lines before attaching sprinklers, emitters, and other terminal fittings. Reuse water from waterline flushing for landscape irrigation if practicable.

07-19-13

Pipe supply lines installed between the water meter and backflow preventer assembly must be installed not less than 18 inches below finished grade measured to the top of the pipe.
Where a connection is made to existing supply lines, bell and gasketed fittings or compression fittings may be used.
Install a thrust block at each change in direction on the main supply line, terminus run, and at other locations shown.
Where supply lines cross paved ditches more than 3 feet deep at their flow line, install galvanized steel pipe for the entire span of the ditch.
Secure UV resistant plastic pipe supply line on grade as shown.

20-2.09C(2) Galvanized Steel Pipe Supply Line

Coat male pipe threads on galvanized steel pipe according to the manufacturer's instructions.

20-2.09C(3) Drip Irrigation Tubing

Install drip irrigation tubing on grade and under manufacturer's instructions.
Install a flush valve and an air-relief valve if recommended by the drip valve assembly manufacturer.

20-2.09C(4) Plastic Pipe Supply Line

For PVC pipe 1-1/2 inches in diameter or smaller, cut the pipe with PVC cutters.
For solvent-cemented type joints, apply primer and solvent-cement separately under the manufacturer's instructions.
Wrap the male portion of each threaded plastic pipe fitting with at least 2 layers of pipe thread sealant tape.
Install plastic pipe supply line mains with solvent-cemented type joints not less than 18 inches below finished grade measured to the top of the pipe.
Install plastic pipe supply line laterals with solvent-cemented type joints not less than 12 inches below finished grade measured to the top of the pipe.
Snake plastic pipe installed by trenching and backfilling methods.

DocuSign Envelope ID: 894511EA-295B-49EB-A393-D26A6837FDD4

20-2.09D Payment

Supply line pipe and drip irrigation tubing are measured along the slope.

20-2.10 SPRINKLER ASSEMBLIES

20-2.10A General

Section 20-2.10 includes specifications for installing sprinkler assemblies.

20-2.10B Materials

20-2.10B(1) General

Each sprinkler assembly must meet the characteristics shown in the irrigation legend.
Where shown, a sprinkler assembly must have a flow shut-off device that automatically stops the flow of water on the downstream side of the device when the assembly is broken. You may use a sprinkler assembly with a preinstalled flow shut-off device or you must install a flow shut-off device under the manufacturer's instructions.
Flexible hose for sprinkler assembly must be leak-free, nonrigid and comply with ASTM D 2287, cell Type 6564500. The hose wall thickness must comply with ASTM D 2122 for the hose diameters shown in the following table:

Hose diameter, nominal (inch)	Minimum wall thickness (inch)
1/2	0.127
3/4	0.154
1	0.179

Solvent cement and fittings for flexible hose must comply with section 20-2.09B(5).

20-2.10B(2) Pop-Up Sprinkler Assemblies

Each pop-up sprinkler assembly must include a body, nozzle, swing joint, pressure compensation device, check valve, sprinkler protector, and fittings as shown.

20-2.10B(3) Riser Sprinkler Assemblies

11-15-13

Each riser sprinkler assembly must include a riser or flexible hose, threaded nipple, swing joint, check valve, and nozzle as shown. The riser must be UV resistant schedule 80, PVC 1120 or PVC 1220 pipe and comply with ASTM D 1785.

20-2.10B(4) Tree Well Sprinkler Assemblies

Each tree well sprinkler assembly must include a body, riser, swing joint, perforated drainpipe, and drain cap.

07-19-13

The perforated drainpipe must be commercial grade, rigid, PVC pipe with holes spaced not more than 6 inches on center on 1 side of the pipe.
Drain cap must be commercially available, 1 piece, injection molded drain grate manufactured from structural foam polyolefins with UV light inhibitors. Drain grate must be black.
Gravel for filling the drainpipe must be graded such that 100 percent passes the 3/4-inch sieve and 100 percent is retained on the 1/2-inch sieve. Gravel must be clean, washed, dry, and free from clay or organic material.

20-2.10C Construction

Install pop-up and riser sprinkler assembly:

1. 6-1/2 to 8 feet from curbs, dikes, and sidewalks
2. 10 feet from paved shoulders
3. 3 feet from fences and walls

DocuSign Envelope ID: 894511EA-295B-49EB-A393-D26A6837FDD4

If sprinkler assembly cannot be installed within these limits, the location will be determined by the Engineer.
Set sprinkler assembly riser on slopes perpendicular to the plane of the slope.
Install tree well sprinkler assembly as shown.

20-2.10D Payment

Not Used

20-2.11 VALVES

20-2.11A General

Section 20-2.11 includes specifications for installing valves.

20-2.11B Materials

20-2.11B(1) General

Valves must:
1. Include a valve box and cover
2. Be the same size as the supply line that the valve serves unless otherwise shown
3. Be bottom, angled, or straight inlet configuration

20-2.11B(2) Ball Valves

Ball valve must be a two-piece brass or bronze body and comply with the requirements shown in the following table:

Property	Requirements
Nonshock working pressure, min	400 psi
Seats	PTFE
O-ring seals	PTFE

Ball valve must be the same size as the supply line that the valve serves.

20-2.11B(3) Check Valves

Each check valve must:
1. Be schedule 80 PVC and factory set to 5 psi for adjustable spring check valve
2. Be Class 200 PVC for swing check valves on non pressurized plastic irrigation supply line

20-2.11B(4) Drip Valve Assemblies

Each drip valve assembly must include:
1. Remote control valve
2. Wye filter with:
   - 2.1. Filter housing that:
     - 2.1.1. Can withstand a working pressure of 150 psi
     - 2.1.2. Is manufactured of reinforced polypropylene plastic
   - 2.2. Reusable stainless steel filter cartridge with a 200 mesh size filtration
3. Ball valve under 20-2.11B(2)
4. Schedule 80 PVC pipes and fittings
5. Pressure regulator

20-2.11B(5) Garden Valve Assemblies

Each garden valve assembly must have:
1. Garden valve
2. Location marker

20-2.11B(6) Gate Valves

Gate valves must be:

DocuSign Envelope ID: 894511EA-295B-49EB-A393-D26A6837FDD4

1. Flanged or threaded type
2. Iron or bronze body
3. Bronze trimmed with one of the following:
   3.1. Internally threading rising stem
   3.2. Nonrising stem
4. Able to withstand a working pressure of 150 psi
5. Same size as the pipeline that the valves serves unless otherwise shown

Gate valves smaller than 3 inches must have a cross handle.
Gate valves 3 inches or larger must be flanged type with a square nut. Furnish 3 long shank keys before Contract acceptance.
Gate valves attached to the outlets of a wye strainer must have seating rings on the discharge side of the gate valves must be PTFE. Valve wedges must be driven obliquely by cam action into the seating rings.

20-2.11B(7) Pressure Regulating Valves

Pressure regulating valve must be:
1. Flanged or threaded type
2. Brass, bronze, cast iron, or plastic body
3. Spring diaphragm type
4. Pilot controlled

Pressure regulating valve must have no internal filter screens.

20-2.11B(8) Pressure Relief Valves

Pressure relief valve must have a brass or bronze body, stainless steel springs, bronze nickel chrome seats, composition seat discs, female bottom inlets, and female side outlets.

20-2.11B(9) Quick Coupling Valves

Quick coupling valve must be 3/4 inch double slotted with a self-closing cap, 3/4-inch brass key and 3/4-inch brass hose swivel unless otherwise shown. Except for the cap, quick coupling valve must be brass or bronze construction. Furnish 3 loose quick coupling brass keys and brass hose swivels before Contract acceptance.

20-2.11B(10) Remote Control Valves

20-2.11B(10)(a) General

Each remote control valve must:
1. Be normally closed type.
2. Be glass filled nylon, brass, or bronze.
3. Be completely serviceable from the top without removing the valve body from the system.
4. Be equipped with a device that regulates and adjusts the flow of water and be provided with a manual shut-off. The manual shut-off for valves larger than 3/4 inch must be operated by a cross handle.
5. Have solenoids compatible with the irrigation controller.
6. Have a manual bleed device.
7. Be capable of withstanding a pressure of 200 psi
8. Have replaceable compression discs or diaphragms.
9. Have threaded fittings for inlets and outlets.
10. Have DC latching solenoids when used with solar or battery controllers. Solenoids must operate on 3.5 V.

20-2.11B(10)(b) Remote Control Valves with Flow Sensor

Reserved

20-2.11B(10)(c) Remote Control Valves with Pressure Regulator

Each remote control valve with pressure regulator must be factory assembled as 1 unit.

DocuSign Envelope ID: 894511EA-295B-49EB-A393-D26A6837FDD4

20-2.11B(11) Wye Strainer Assemblies

Each wye strainer assembly must include:
1. Wye strainer
2. Garden valve

20-2.11C Construction

20-2.11C(1) General

Install control valves:
1. 6-1/2 to 8 feet from curbs, dikes, and sidewalks
2. 10 feet from paved shoulders
3. 3 feet from fences, walls, or both

If a control valve cannot be installed within these limits, the location will be determined by the Engineer.

20-2.11C(2) Check Valves

Unless otherwise shown, install spring-action check valves as necessary to prevent low head drainage.

20-2.11C(3) Garden Valve Assemblies

Install a location marker 8 to 10 inches from the back of each garden valve.

20-2.11C(4) Pressure Regulating Valves

Install pressure regulating valves with threaded connections and a union on the inlet side of the valves.

20-2.11C(5) Wye Strainer Assemblies

Unless shown, install wye strainer assembly on the upstream side of the remote control valves.
Install garden valve so that when the system is flushed, the discharge sprays out of the valve box.

20-2.11D Payment

Not Used

05-30-14

20-2.12–20-2.13 RESERVED

07-19-13

20-2.14 SUPPLY LINE ON STRUCTURES

20-2.14A General

20-2.14A(1) General

20-2.14A(1)(a) Summary

Section 20-14 includes specifications for installing water supply lines through bridges and on the exterior of concrete structures.

20-2.14A(1)(b) Definitions

Reserved

20-2.14A(1)(c) Submittals

Submit a work plan for temporary casing support at the abutments as an informational submittal.

20-2.14A(1)(d) Quality Control and Assurance

20-2.14A(1)(d)(i) General

Before installing seismic expansion assemblies or expansion assemblies, the Engineer must authorize the extension setting.

20-2.14A(1)(d)(ii) Regulatory Requirements

Piping materials must bear the label, stamp, or other markings of the specified standards.

DocuSign Envelope ID: 894511EA-295B-49EB-A393-D26A6837FDD4

20-2.14A(1)(d)(iii) Site Tests

Test water supply lines before:
1. Backfilling
2. Beginning work on box girder cell decks
3. Otherwise covering the water supply lines

Furnish pipe anchorages to resist thrust forces occurring during testing.
Test the water supply lines as 1 unit. The limits of the unit must be 5 feet beyond the casing at each end of the bridge.
Cap each end of the water supply lines before testing. Caps must be rated for the test pressure.
Test water supply lines under section 20-2.01A(4)(b), except that the testing period must be 4 hours with no pressure drop.
For water supply lines 4 inches and larger testing must meet the following additional requirements:
1. Testing pressure must be at least 120 psi
2. Air relief valve must not be subjected to water pressure due to testing

If water supply lines fail testing, retest the lines after repair.

20-2.14A(2) Materials

20-2.14A(2)(a) General

Protect stored piping from moisture and dirt. Elevate piping above grade. Support piping to prevent sagging and bending.
Protect flanges, fittings, and assemblies from moisture and dirt.

20-2.14A(2)(b) Air Release Valve Assemblies

Air release valve assemblies include an air release valve, ball valve, tank vent, nipples, and pipe saddle. Assemblies must comply with the following:
1. Air release valves must have a cast iron body with stainless steel trim and float, 1-inch NPT inlet, 1/2-inch NPT outlet, and 3/16-inch orifice.
2. Ball valves must have a 2-piece bronze body with chrome plated or brass ball, 1-inch full-size port, and be rated for at least 400 psi.
3. Tank vents must have a 1/2-inch NPT inlet and downward-facing double openings with screened covers.
4. Nipples must be schedule 40 galvanized steel pipe.
5. Pipe saddle must be rated for at least 150 psi and compatible with water supply line. Pipe saddle must be (1) single strap pipe saddle for water supply lines smaller than 4 inches or (2) double strap pipe saddle for water supply lines 4 inches and larger. You may use a tee fitting for galvanized steel water supply lines.

20-2.14A(2)(c) Casings

Casings must be welded steel pipe casing complying with section 70-7.

20-2.14A(2)(d) Pipe Wrap Tape

Pipe wrap tape must be pressure sensitive tape made from PVC or polyethylene. Pipe wrap tape must be at least 50 mils thick and not wider than 2 inches.

20-2.14A(2)(e) Pipe Hangers

Pipe hangers must comply with section 70-7.02C.
The pipe hanger must be rated for the water supply line. If casings are shown, include the casings weight.

20-2.14A(2)(f) Epoxy Adhesives

Epoxy used for anchoring concrete pipe supports must comply with section 70-7.02D.

20-2.14A(2)(g) Concrete Pipe Supports

DocuSign Envelope ID: 894511EA-295B-49EB-A393-D26A6837FDD4

Concrete pipe supports must comply with section 70-7.02D.

20-2.14A(2)(h) Pipe Clamps and Anchors

Metal clamps must be commercial quality steel complying with section 75-1.02. Anchors must comply with the specifications for concrete anchorage devices in section 75-1.03C.

20-2.14A(2)(i) Pull Boxes

Pull boxes and covers must comply with section 20-2.01B(5).

20.2.14A(3) Construction

20-2.14A(3)(a) General

Support water supply lines as described.

Where water supply lines penetrate bridge superstructure concrete, either form or install pipe sleeves at least 2 pipe sizes larger than the pipe.

20-2.14A(3)(b) Preparation

Clean the interior of the pipe before installation. Cap or plug openings as pipe is installed to prevent the entrance of foreign material. Leave caps or plugs in place until the next pipe section is installed.

20-2.14A(3)(c) Installation

20-2.14A(3)(c)(i) General

Reserved

20-2.14A(3)(c)(ii) Casings

Install casings under section 70-7.03.

Seal casing end with 8 inches of polyurethane foam at dirt stop or pipe end seal.

20-2.14A(3)(c)(iii) Wrapping Water Supply Line

Wrap damaged supply line coatings with pipe wrap tape. Wrap field joints and fittings that are in contact with the earth.

Wrapping must comply with the following:

1. Clean and prime area as recommended by the tape manufacturer.
2. Tightly wrap tape with 1/2 uniform overlap, free from wrinkles and voids, to provide not less than a 100 mil thickness.
3. The tape must conform to joint or fitting contours.
4. Extend tape at least 6 inches over adjacent pipe.

20-2.14A(3)(c)(iv) Pipe Clamps and Anchors

Install water supply lines on the exterior surfaces of bridges or other concrete structures with metal clamps and anchors.

Drilling of holes for anchors must comply with the following:

1. Drill holes to manufacturers recommended depth.
2. Drilling tools must be authorized.
3. Do not drill holes closer than 6 inches to the edge of a concrete structure.
4. Relocate holes if reinforcing steel is encountered. Fill abandoned holes with mortar. Mortar must comply with section 51-1.02F.

Where water supply lines are mounted vertically for more than 2 feet, install clamps and anchors within 6 inches of the elbows.

Where water supply lines are mounted vertically for more than 10 feet, install additional clamps and anchors at 10 foot centers unless otherwise shown.

20-2.14A(3)(d) Sequences of Operation

If the bridge superstructure is to be prestressed do not place mortar around casings in abutments and hinges until bridge superstructure prestressing has been completed.

DocuSign Envelope ID: 894511EA-295B-49EB-A393-D26A6837FDD4

20-2.14A(4) Payment

Supply line on structures is measured from end to end, along the centerline.
The Department does not pay for failed tests.

20-2.14B Supply Line on Structures, Less than 4 Inches

20-2.14B(1) General

20-2.14B(1)(a) Summary

Section 20-2.14B includes specifications for installing water supply lines smaller than 4 inches.

20-2.14B(1)(b) Definitions

Reserved

20-2.14B(1)(c) Submittals

Product data for materials includes catalog cuts, performance data, and installation instructions.
Submit product data for:

1. Water supply line
2. Expansion assemblies
3. Casing insulators
4. Pipe end seals
5. Pipe anchorages
6. Air release valve assemblies
7. Casings
8. Pipe hangers
9. Epoxy adhesives
10. Concrete pipe supports

20-2.14B(1)(d) Quality Control and Assurance

Reserved

20-2.14B(2) Materials

20-2.14B(2)(a) General

Reserved

20-2.14B(2)(b) Water Supply Line

Water supply lines must comply with section 20-2.09.

20-2.14B(2)(c) Expansion Assemblies

Expansion assemblies must consist of a hose with ends, insulated flange connections, and elbows. Expansion assemblies must have the same nominal inside diameter as the water supply line. Working pressure must be at least 150 psi.
Hose must be medium or heavy weight, crush and kink resistant, rated for at least 150 psi. Cover must be flexible, oil resistant rubber or synthetic, reinforced with at least 2-ply synthetic yarn or steel wire. The inner tube must meet FDA and USDA Standards for potable water. Hose ends must be stainless steel flanged connections with stainless steel crimped bands or swaged end connectors. Do not use barbed ends with band clamps.
Elbows must be 45 degree, standard weight galvanized steel fittings.

20-2.14B(2)(d) Casing Insulators

Casing insulators must be:

1. 2-piece, high-density, injection-molded polyethylene, nonconductive inner liner, with cadmium-plated nuts and bolts.
2. Factory constructed to ensure the water supply line is centered in the casing. Insulators must not allow any contact between pipe and casing and have at least 2 runners seated on the bottom of the casing.
3. Sized for the casing and water supply line shown.

DocuSign Envelope ID: 894511EA-295B-49EB-A393-D26A6837FDD4

20-2.14B(2)(e) Pipe Anchorages

Pipe anchorages must consist of an I-beam, U-bolts, anchors, and double nuts.
Use concrete anchorage devices for anchors on existing bridges. Use L-anchor bolts for anchors on new bridges.
Fabricate the I-beam from 1/2-inch steel plate. Steel plate, U-bolts, L-anchors, and nuts must comply with section 75-1.02. Concrete anchorage devices must comply with section 75-1.03C.

20-2.14B(2)(f) Pipe End Seals

Pipe end seals must consist of a pipe end seal, stainless steel bands, and polyurethane foam.
Pipe end seal must be factory constructed from seamless neoprene and sized for the casing and water supply line shown. Neoprene must be at least 1/8 inch thick. Stainless steel bands must be crimped.
Polyurethane foam must be expanding foam spray that is water resistant and moisture cured.

20-2.14B(3) Construction

Locate pipe anchorage halfway between expansion assemblies.
Pipe end seal must be pulled onto the casing during pipe installation. Do not use wrap-around type end seals.

20-2.14B(4) Payment

Supply line on structures is paid for as galvanized steel pipe (supply line on bridge).

20-2.14C Supply Line on Structures, 4 Inches and Larger

20-2.14C(1) General

20-2.14C(1)(a) Summary

Section 20-2.14C includes specifications for installing water supply lines 4 inches and larger.

20-2.14C(1)(b) Definitions

Reserved

20-2.14C(1)(c) Submittals

Product data for materials includes catalog cuts, performance data, and installation instructions.
Submit product data for:

1. Water supply line
2. Expansion assemblies
3. Flange insulating gaskets
4. Casing insulators
5. Seismic expansion assemblies
6. Lateral restraint assemblies
7. Air release valve assemblies
8. Casings
9. Pipe hangers
10. Epoxy adhesives
11. Concrete pipe supports

Submit the maximum range and preset dimension for each expansion assembly or seismic expansion assembly as an informational submittal.
Submit at least 5 sets of product data to OSD, Documents Unit. Each set must be bound together and include an index stating equipment names, manufacturers, and model numbers. Two sets will be returned. Notify the Engineer of the submittal. Include in the notification the date and contents of the submittal.

20-2.14C(1)(d) Quality Control and Assurance

Reserved

DocuSign Envelope ID: 894511EA-295B-49EB-A393-D26A6837FDD4

20-2.14C(2) Materials

20-2.14C(2)(a) General

Reserved

20-2.14C(2)(b) Water Supply Line

Water supply lines must consist of ductile iron pipe and fittings. Pipe must comply with ANSI/AWWA C151/A21.51, Class 350. Fittings must comply with ANSI/AWWA C110/A21.10, rated for a working pressure of 350 psi.

Ductile iron pipe connections to expansion assemblies must be a flanged joint complying with ANSI/AWWA C115/A21.15. Flange gaskets must be rated for a working pressure of 350 psi. Fasteners must comply with section 75-1.02, except that stainless steel fasteners must not be used.

All other ductile iron pipe and fitting joints must be push-on, restrained type complying with ANSI/AWWA C111/A21.11. Push-on, restrained type joints may use proprietary dimensions and proprietary restrained joint locking systems.

Ductile iron pipe and fittings must have an asphaltic coating complying with ANSI/AWWA C151/A21.51, and a cement mortar lining complying with ANSI/AWWA C104/A21.4.

20-2.14C(2)(c) Expansion Assemblies

Expansion assemblies must be a sleeve type expansion joint. The expansion assembly must have:

1. Ductile iron body complying with ANSI/AWWA C153/A21.53
2. Flanged ends complying with ANSI/AWWA C110/A21.10
3. Fusion bonded epoxy internal lining complying with ANSI/AWWA C213 at least 15 mils thick
4. Internal expansion sleeve limiting stop collars and be pressure balanced
5. Working pressure of at least 350 psi for sizes 24 inches and smaller and 250 psi for sizes larger than 24 inches
6. NSF 61 certification

The expansion assembly must be factory set at 1/2 the extension capacity.

20-2.14C(2)(d) Flange Insulating Gaskets

Flange insulating gaskets must consist of a dielectric flange gasket, insulating washers and sleeves, and commercial quality steel bolts and nuts. Dielectric flange gasket must have a dielectric strength of at least 500 vpm.

20-2.14C(2)(e) Casing Insulators

Casing insulators must be:

1. 2-piece, 8-inch, 14-gauge epoxy-coated or galvanized steel band, four 2-inch-wide glass-reinforced polyester or polyethylene runners, with cadmium-plated nuts and bolts.
2. Coated with at least 15-mils heat-fused PVC to provide a nonconductive inner liner.
3. Factory constructed to ensure the water supply line is centered in the casing. Insulators must not allow any pipe to casing contact and have at least 2 runners seated on the bottom of the casing.
4. Sized for the casing and water supply line shown.

20-2.14C(2)(f) Dirt Stops

Dirt stops must consist of a redwood cover with polyurethane foam.

Use construction heart grade redwood complying with 57-2.01B(2). Construct cover to fit snugly around the water supply line. The cover must be 2 inches taller and 2 inches wider than the casing. Polyurethane foam must be expanding foam spray that is water resistant and moisture cured.

20-2.14C(2)(g) Seismic Expansion Assemblies

Seismic expansion assemblies must be a sleeve type expansion joint with integral ball joints at each end.

Seismic expansion assemblies must have:

DocuSign Envelope ID: 894511EA-295B-49EB-A393-D26A6837FDD4

1. Ability to withstand at least 15 degree angular deflection at each end and maximum movement in all 3 planes at the same time
2. Ductile iron body complying with ANSI/AWWA C153/A21.53
3. Flanged ends complying with ANSI/AWWA C110/A21.10
4. Fusion bonded epoxy internal lining complying with ANSI/AWWA C213 at least 15 mils thick
5. Internal expansion sleeve limiting stop collars and pressure balanced
6. Ball joints contained in flanged retainers with seal gaskets
7. Working pressure of at least 350 psi for sizes 24 inches and smaller and 250 psi for sizes larger than 24 inches
8. NSF 61 certification

The seismic expansion assembly must be factory set at 1/2 the extension capacity.

20-2.14C(2)(h) Lateral Restraint Assemblies

Lateral restraint assemblies must be (1) constructed from commercial quality steel components complying with section 75-1.02, (2) adjustable, and (3) able to resist a horizontal force of 10 percent of the contributory dead load.

20-2.14C(3) Construction

Each ductile iron pipe must be connected and fully extended (pulled out) after joint assembly before the next pipe section is added.

Install flange insulating gaskets on the outside flange of seismic expansion assemblies and expansion assemblies.

20-2.14C(4) Payment

Supply line on structures is paid for as supply line (bridge).

20-2.15 TEMPORARY IRRIGATION SYSTEMS

Reserved

20-2.16–20-2.19 RESERVED

20-3 PLANTING

20-3.01 GENERAL

20-3.01A General

20-3.01A(1) Summary

Section 20-3 includes specifications for performing planting work in new and existing landscapes.

20-3.01A(2) Definitions

Reserved

20-3.01A(3) Submittals

20-3.01A(3)(a) General

Submit nursery invoices showing species or variety and inspection certificates for plants.

Submit documentation of clearance from the county agricultural commissioner for plants obtained from a county outside the project limits.

If a root stimulant is required, submit a copy of the root stimulant manufacturer's product sheet and instructions for the application of the root stimulant.

If cuttings are to be taken from outside the right-of-way, submit proof of permits and payment of associated fees. Notify the Engineer of the location at least 15 days before taking cuttings.

20-3.01A(3)(b) Vendor Statements

At least 60 days before planting the plants, submit a statement from the vendor that the order for the plants required, including sample plants used for inspection, has been received and accepted by the vendor. The statement from the vendor must include the plant names, sizes, and quantities and the anticipated delivery date.

DocuSign Envelope ID: 894511EA-295B-49EB-A393-D26A6837FDD4

20-3.01A(3)(c) Certificates of Compliance

Submit a certificate of compliance for:

1. Sod
2. Soil amendment

20-3.01A(4) Quality Control and Assurance

Plants must comply with federal and state laws requiring inspection for diseases and infestations. Inspection certificates required by law must accompany each shipment of plants.

Obtain clearance from the county agricultural commissioner before planting plants delivered from a county outside the project limits.

The Engineer inspects the roots of container-grown sample plants by removing earth from the rootball of not less than 2 plants, nor more than 2 percent of the total number of plants of each species or variety. If container-grown plants are purchased from several sources, the Engineer inspects the roots of not less than 2 of each sample plant species or variety from each source. The rootball of container grown plants must not show evidence of being underdeveloped, deformed, or having been restricted.

If the Engineer finds noncompliant plants, the entire lot represented by the noncompliant sample plants will be rejected.

Cuttings with mature or brown stems and cuttings that have been trimmed will be rejected.

20-3.01B Materials

20-3.01B(1) General

Notify the Engineer at least 10 days before the plants are shipped to the job site.

20-3.01B(2) Plants

20-3.01B(2)(a) General

Plants must be the variety and size shown and true to the type or name shown. Plants must be individually tagged or tagged in groups identifying the plants by species or variety. Tagging is not required for cuttings.

Plants must be healthy, well-formed, not root-bound, free from insect pests and disease, and grown in nurseries inspected by the Department of Food and Agriculture.

The plants must comply with the size and type shown in the following table:

Plant group designation	Description	Container size (cu in)
A	No. 1 container	152–251
B	No. 5 container	785–1242
C	Balled and burlapped	--
E	Bulb	--
F	In flats	--
H	Cutting	--
I	Pot	--
K	24-inch box	5775–6861
M	Liner[a]	--
O	Acorn	--
P	Plugs[a, b]	--
S	Seedling[c]	--
U	No. 15 container	2768–3696

[a]Do not use containers made of biodegradable material.
[b]Grown in individual container cells.
[c]Bare root.

DocuSign Envelope ID: 894511EA-295B-49EB-A393-D26A6837FDD4

Trucks used for transporting plants must be equipped with covers to protect plants from windburn. Handle and pack plants in an authorized way for the species or variety.

20-3.01B(2)(b) Cuttings

20-3.01B(2)(b)(i) General

Take cuttings at random from healthy, vigorous plants. Make cuts with sharp, clean tools. Do not take more than 25 percent of an individual plant and not more than 50 percent of the plants in an area.

Keep cuttings covered and wet until planted. Do not allow cuttings to dry or wither.

Plant cuttings no more than 2 days after being cut.

20-3.01B(2)(b)(ii) *Carpobrotus* and *Delosperma* Cuttings

You may take cuttings for new *Carpobrotus* and *Delosperma* groundcover from the existing highway planting areas, but these areas may not provide enough material to complete the work. Contact the local District's encroachment permit office to obtain a permit to harvest cuttings, identify acceptable cutting harvest areas, and to determine acceptable quantities to take.

Take tip cuttings from healthy, vigorous Carpobrotus and Delosperma plants that are free of pests and disease.

Carpobrotus cuttings must be 10 inches or more in length and not have roots.

Delosperma cuttings must be 6 inches or more in length and not have roots.

20-3.01B(2)(b)(iii) Willow Cuttings

Take willow cuttings from areas shown or designated by the Engineer.

Willow cuttings must be:

1. Reasonably straight
2. 20 to 24 inches in length
3. 3/4 to 1-1/2 inch in diameter at the base of the cutting

Cut the top of each willow cutting square above a leaf bud. Cut the base below a leaf bud at approximately a 45 degree angle. Trim off leaves and branches flush with the stem of the cutting.

20-3.01B(2)(b)(iv) Cottonwood Cuttings

Cottonwood cuttings must comply with the requirements for willow cuttings in section 20-3.01B(2)(b)(iii).

20-3.01B(2)(b)(v)–20-3.01B(2)(b)(viii) Reserved

20-3.01B(2)(c) Sod

Sod must:

1. Be grown to comply with the Food & Agri Code
2. Be free from weeds and undesirable types of grasses and clovers
3. Be field-grown on soil containing less than 50 percent silt and clay
3. Have less than 1/2-inch-thick thatch
4. Not be less than 8 months or more than 16 months old
5. Be machine-cut to a uniform soil thickness of 5/8 ± 1/4 inch, not including top growth and thatch

Protect sod with tarps or other protective covers during delivery. Do not allow sod to dry out during delivery or before placement.

20-3.01B(3) Soil Amendment

Soil amendment must comply with the requirements in the Food & Agri Code. Soil amendment must be one or a combination of the following:

1. Sphagnum peat moss
2. Nitrolized fir bark
3. Vermiculite
4. Perlite

DocuSign Envelope ID: 894511EA-295B-49EB-A393-D26A6837FDD4

20-3.01B(4) Fertilizers

20-3.01B(4)(a) General

Deliver fertilizer in labeled containers showing weight, chemical analysis, and manufacturer's name.

Fertilizer must comply with the requirements of the Food & Agri Code.

20-3.01B(4)(b) Slow-release Fertilizers

Slow-release fertilizer must be a pelleted or granular form with a nutrient release over an 8 to 12 month period and must comply with the chemical analysis ranges shown in the following table:

Ingredient	Content (percent)
Nitrogen (N)	16–21
Phosphoric acid (P)	6–8
Water soluble potash (K)	4–10

20-3.01B(4)(c) Packet Fertilizers

Packet fertilizer must be a biodegradable packet with a nutrient release over a 12 month period. Each packet must have a weight of 10 ± 1 grams and must comply with the chemical analysis shown in the following table:

Ingredient	Content (percent)
Nitrogen(N)	20
Phosphoric acid (P)	10
Water soluble potash (K)	5

20-3.01B(4)(d) Organic Fertilizers

Organic fertilizer must be pelleted or granular with a cumulative nitrogen release rate of no more than 70 percent for the first 70 days after incubation at 86 degrees F with 100 percent at 350 days or more. Organic fertilizer must comply with the chemical analysis shown in the following table:

Ingredient	Content (percent)
Nitrogen (N)	5–7
Phosphoric acid (P)	1–5
Water soluble potash (K)	1–10

20-3.01B(5) Root Stimulants

Root stimulant must be a commercial quality product.

20-3.01B(6) Plaster Sand

Backfill material for the transplant palm tree planting holes must be 100 percent commercial quality washed plaster sand.

20-3.01B(7) Root Barrier

Root barrier must be an injection molded or extruded modular panel made of high-density polypropylene or polyethylene plastic.

Each panel must:

1. Be at least 1/16-inch thick
2. Have at least 4 molded root-deflecting vertical ribs 0.5- to 0.8-inch wide, 6 to 8 inches apart
3. Have a locking strip or an integral male-female sliding lock designed to resist slippage between panels
4. Be at least 2 feet wide and 2 feet in depth

DocuSign Envelope ID: 894511EA-295B-49EB-A393-D26A6837FDD4

20-3.01B(8) Root Protectors

Each root protector must be:

1. Fabricated from 1-inch, hexagonal pattern, 20-gauge mesh wire
2. Closed bottom design with a height and diameter that provides a minimum of 6 inches of clearance between the root ball and the sides and bottom of the wire cylinder

Wire edges at the top of the cylinder must be the uncut manufactured finished edge free of sharp points.

20-3.01B(9) Foliage Protectors

Each foliage protector must be:

1. Fabricated from 1-inch, hexagonal pattern, 20-gauge mesh wire
2. Approximately 4 feet high and 2 feet in diameter

Wire edges at the top of the cylinder must be the uncut manufactured finished edge free of sharp points. Other wire edges that are cut must be free of sharp points.

Support stakes must be one of the following:

1. 3/4-inch reinforcing steel bar a minimum of 5 feet long with an orange or red plastic safety cap that fits snugly onto the top of the reinforcing steel bar
2. 2 inch nominal diameter or 2 by 2 inch nominal size wood stakes a minimum of 5 feet long. Wood stakes must be straight

The jute mesh cover must comply with section 21-1.02O(2). Twine required to hold the jute mesh cover in place must be 1/8-inch diameter manila hemp twine.

20-3.01B(10) Wood Plant Stakes

Each plant stake must be nominal 2 by 2 inch or nominal 2-inch diameter and of sufficient length to keep the plant in an upright position.

Plant stakes for vines must be nominal 1 by 1 inch,18 inches long.

20-3.01B(11) Plant Ties

Plant ties must be extruded vinyl-based tape, 1 inch wide and at least 10 mils thick.

20-3.01C Construction

20-3.01C(1) General

Apply a root stimulant under the manufacturer's instructions to the plants specified in the special provisions.

Before transporting the plants to the planting area, thoroughly wet the root ball.

20-3.01C(2) Pruning

Prune plants under the latest edition of ANSI A300 part 1, *Pruning*, published by the Tree Care Industry Association.

Do not use tree seal compounds to cover pruning cuts.

20-3.01C(3) Watering

Water existing plants to be maintained, transplanted trees, and new plants as needed to keep the plants in a healthy growing condition.

20-3.01C(4) Replacement Plants

Plants that show signs of failure to grow at any time or are so injured or damaged as to render them unsuitable for the purpose intended, must be removed, replaced, and replanted. Replace unsuitable plants within 2 weeks after the Engineer marks or indicates that the plants must be replaced.

Replacement planting must comply with the original planting requirements, spacing, and size provisions described for the plants being replaced.

DocuSign Envelope ID: 894511EA-295B-49EB-A393-D26A6837FDD4

Replacement planting for transplanted trees must comply with the work plan and be planted in the same planting hole.
Replacement ground cover plants must be the same species specified for the ground cover being replaced. Other replacement plants must be the same species as the plants being replaced.
Place orders for replacement plants with the vendor at the appropriate time so that the replacement plants are not in a root-bound condition.
The Department does not pay for replacement plants or the planting of replacement plants.

20-3.01C(5) Maintain Plants

Maintain plants from the time of planting until Contract acceptance if no plant establishment period is specified or until the start of the plant establishment period.

20-3.01D Payment

Reserved

20-3.02 EXISTING PLANTING

20-3.02A General

20-3.02A(1) Summary

Section 20-3.02 includes specifications for pruning existing plants, transplanting trees, and maintaining existing planted areas.
Transplant palm trees between March 15 and October 15.

20-3.02A(2) Definitions

Reserved

20-3.02A(3) Submittals

Submit a work plan for:

1. Transplanting trees. The work plan must include methods for lifting, transporting, storing, planting, guying, and maintaining each tree to be transplanted. Include root ball size, method of root ball containment, and a maintenance program for each tree.
2. Maintaining existing planted areas. The work plan must include weed control, fertilization, mowing and trimming of turf areas, watering, and controlling rodents and pests.

Submit a copy of the manufacturer's product sheet for root stimulant including application instructions.

20-3.02A(4) Quality Control and Assurance

Inspect for deficiencies of existing planted areas in the presence of the Engineer. Complete the inspection within 15 days after the start of job site activities.
Deficiencies requiring corrective action include:

1. Weeds
2. Dead, diseased, or unhealthy plants
3. Missing plant stakes and tree ties
4. Inadequate plant basins and basin mulch
5. Other deficiencies needing corrective action to promote healthy plant life
6. Rodents and pests

20-3.02B Materials

Not Used

20-3.02C Construction

20-3.02C(1) General

Correct deficiencies of existing planted areas as ordered within 15 days of the order. Correction of deficiencies is change order work.

DocuSign Envelope ID: 894511EA-295B-49EB-A393-D26A6837FDD4

After deficiencies are corrected, perform work to maintain existing planted areas in a neat and presentable condition and to promote healthy plant growth through Contract acceptance.

20-3.02C(2) Prune Existing Plants

Prune existing plants as shown.

If no bid item for prune existing plants is included, prune existing plants as ordered. Pruning existing plants is change order work.

20-3.02C(3) Transplant Trees

Prune each tree to be transplanted immediately before lifting.

If the tree to be transplanted is a palm, prune by removing dead fronds and frond stubs from the trunk. Remove green fronds up to 2 rows of fronds away from the center of growth. Tie the remaining 2 rows of fronds in an upright position with light hemp or manila rope. Remove fronds and frond stubs at the trunk in a manner that will not injure the trunk. Remove fronds and frond stubs for *Phoenix dactylifera* (Date Palm) approximately 4 inches from the trunk.

Prepare each hole in the new location before lifting the tree to be transplanted.

Lift tree to be transplanted as described in the work plan.

Comply with section 20-3.03C(3) for handling and planting each tree to be transplanted.

Until replanted, cover exposed root ball with wet burlap or canvas and cover the crown with 90 percent shade cloth.

Replant each tree on the same day it is lifted if possible. If the transplant location is not ready to receive the tree, store and maintain the tree to be transplanted until the transplant location is authorized. Store tree in an upright position.

Replace damaged transplanted tree under 20-3.01C(4) and with the number of trees specified in the special provisions.

The replacement trees must be planted in individual plant holes at the location determined by the Engineer within the area of the tree being replaced. Comply with section 20-3.03C(2) for the planting of the replacement trees.

20-3.02C(4) Maintain Existing Planted Areas

If a bid item for maintain existing planted areas is included, the existing plant basins must be kept well-formed and free of sediment. If the existing plant basins need repairs, and the basins contain mulch, replace the mulch after the repairs are done.

Control weeds within the existing planted area and:

1. From the existing planted area limit to the adjacent edges of paving and fences if less than or equal to 12 feet
2. From the existing planted area limit to 6 feet beyond the outer limit of the existing planted area if the adjacent edge of paving or fence is more than 12 feet away
3. Within a 3-foot radius from each existing tree and shrub

If no bid item for maintain existing planted areas is included, maintain existing planted areas as ordered. Maintain existing planted areas is change order work.

20-3.02D Payment

Not Used

20-3.03 PLANTING WORK

20-3.03A General

Section 20-3.03 includes specifications for planting plants.

20-3.03B Materials

Not Used

DocuSign Envelope ID: 894511EA-295B-49EB-A393-D26A6837FDD4

20-3.03C Construction

20-3.03C(1) General

Do not begin planting until authorized.
If an irrigation system is required, do not begin planting in an area until the functional test has been completed and authorized for the irrigation system serving that area.

20-3.03C(2) Preparing Planting Areas

The location of each plant is as shown unless the Engineer designates otherwise. If the Engineer designates the location, it will be marked by a stake, flag, or other marker.
Conduct work so the existing flow line in drainage ditches is maintained. Material displaced by your operations that interferes with drainage must be removed.
Where a minimum distance to a drainage ditch is shown, locate the plant so that the outer edge of its basin wall is at least the minimum distance shown for each plant involved.
Excavate each planting hole by hand digging or by drilling. The bottom of each planting hole must be flat. Do not use water for excavating the hole.
Unless a larger planting hole is specified, the planting hole must be large enough to receive the root ball or the total length and width of roots, backfill, amendments, and fertilizer. Where rock or other hard material prohibits the hole from being excavated, a new hole must be excavated and the abandoned hole backfilled.

20-3.03C(3) Planting Plants

20-3.03C(3)(a) General

Do not plant plants in soil that is too wet, too dry, not properly conditioned as specified, or in an unsatisfactory condition for planting.
Do not distribute more plants than can be planted and watered on that day.
Water plants immediately after planting. Apply water until the backfill soil around and below the roots or ball of earth around the roots of each plant is thoroughly saturated. When watering with a hose, use a nozzle, water disbursement device, or pressure reducing device. Do not allow the full force of the water from the open end of the hose to fall within the basin around any plant. Groundcover plants in areas with an irrigation system must be watered by sprinklers. Several consecutive watering cycles may be necessary to thoroughly saturate the soil.
If shown, install root barriers between trees and concrete sidewalk or curb. Install panels flush with finished grade and join with locking strips or integral male-female sliding locks. Install barriers with root deflectors facing inward.
If a tree grate is shown, install root barrier panels 0.5 inch above finish grade or as shown.
Adjust planting locations so that each tree or shrub is at least 8 feet away from any sprinkler.
Where a tree, shrub, or vine is to be planted within a groundcover area or cutting planting area, plant it before planting groundcover or cuttings.
Where shrubs and groundcovers are shown to be planted in groups, the outer rows directly adjacent to the nearest roadway or highway fence must be parallel to the nearest roadway or highway fence. Stagger shrubs and groundcovers in adjacent rows. Adjust the alignment of the plants within the outer rows.
Core holes in concrete masonry block wall as shown.
Where a vine is to be planted against a wall or fence, plant it as close as possible to the wall or fence. If a vine planted next to a wall is to be staked, stake and tie the vine at the time of planting. A vine planted next to a fence must be tied to the fence at the time of planting.
Protect tree trunks from injury. Do not:

1. Drag tree
2. Use chains to move a tree

DocuSign Envelope ID: 894511EA-295B-49EB-A393-D26A6837FDD4

3. Lay tree on the ground

20-3.03C(3)(b) Trees, Shrubs, and Vines

After preparing holes, thoroughly mix soil amendment and granular fertilizer at the rate shown with native soil to be used as backfill material. Remove containers from plants in such a manner that the ball of earth surrounding the roots is not broken. Do not cut plant containers before delivery of the plants to the planting area. Plant and water plants immediately after removal from their containers.

Place packet fertilizer in the backfill within 6 to 8 inches of the ground surface and approximately 1 inch from the root ball. If more than 1 packet is required per plant, distribute the packets evenly around the root ball.

If a root stimulant is to be used, apply it according to the manufacturer's instructions.

If required, install root protectors in the plant holes as shown.

Ensure roots are not restricted or distorted.

Distribute backfill uniformly throughout the entire depth of the plant hole without clods or lumps.

After the planting holes have been backfilled, jet water into the backfill with a pipe or tube inserted into the bottom of the hole until the backfill material is saturated for the full depth. If the backfill material settles below this level, add additional backfill to the required level. If a plant settles deeper than shown, replant it at the required level.

Remove nursery stakes after planting.

Install 2 plant stakes for each plant to be staked at the time of planting as shown. Ensure the rootball is not damaged.

Tie the plant to the stakes with 2 plant ties, 1 tie to each stake. Each tie must form a figure 8 by crossing the tie between the plant and the stake as shown. Install ties at the lowest position that will support the plant in an upright position. Ties must provide trunk flexibility but not allow the trunk to rub against the stakes. Wrap each end of the tie 1-1/2 turns around the stake and securely tie.

Construct a watering basin around each plant as shown.

If required, install a foliage protector:

1. Over the plant within 2 days after planting.
2. Vertically and centered over the plant as shown

If foliage protectors are required:

1. Cut the bottom of the wire cylinder to match the slope of the ground. Do not leave sharp points of wire after cutting. Sharp points must be bent over or blunted.
2. Install 2 support stakes for foliage protectors vertically and embed in the soil on opposite sides of the plant as shown and in a transverse direction to the prevailing wind.
3. Either weave the support stakes through the wire cylinder mesh at 6 inch maximum centers or fasten the wire cylinder to the support stakes at 6 inch maximum centers.
4. Wire cylinder must be snug against the support stakes but loose enough to be raised for pesticide application or to perform weeding within the plant basin.
5. Install jute mesh cover over the foliage protector and secure with twine as shown.

20-3.03C(3)(c) Groundcover Plants

Each groundcover planting area irrigated by a single control valve must be completely planted and watered before planting other groundcover planting areas.

Plant groundcover plants in moist soil, and in neat, straight rows, spaced as shown.

Apply fertilizer to groundcover plants and water into the soil immediately after planting.

20-3.03C(3)(d) Cuttings, Liners, Plugs, and Seedling Plants

20-3.03C(3)(d)(i) General

DocuSign Envelope ID: 894511EA-295B-49EB-A393-D26A6837FDD4

Apply fertilizer to cuttings, liners, plugs, and seedling plants and water immediately after planting.
Ensure the soil is moist to a minimum depth of 8 inches before planting cuttings.
If a root stimulant is to be used, apply it according to the manufacturer's instructions.

20-3.03C(3)(d)(ii) Willow Cuttings

Unless otherwise shown, for willow cuttings excavate planting holes perpendicular to the ground line by using a steel bar, auger, post hole digger, or similar tools. Holes must be large enough to receive the cuttings and fertilizer packet. Plant willow cuttings to the specified depths without damaging the bark.
Where rock or other hard material prohibits the excavation of the planting holes, excavate new holes and backfill the unused holes.
Plant willow cuttings during the period specified in the special provisions.
Apply root stimulant according to the manufacturer's instructions.
Plant the base of the cutting 10 to 12 inches deep with 3 to 5 bud scars exposed above the ground. If more than 5 bud scars are exposed, trim off the excess willow cutting length.
Place 1 fertilizer packet in the backfill of each cutting, 6 to 8 inches below the ground surface and approximately 1 inch from the cutting.
Backfill the plant holes with excavated material after planting. Distribute the excavated material evenly within the hole without clods, lumps, or air pockets. Compact the backfill so that the cutting cannot be easily removed from the soil. Do not damage the cutting's bark.
Dispose of trimmings and unused cuttings.

20-3.03C(3)(d)(iii) Cottonwood Cuttings

Reserved

20-3.03C(3)(d)(iv) *Carpobrotus* and *Delosperma* Cuttings

Plant *Carpobrotus* cuttings to a depth so that not less than 2 nodes are covered with soil. The basal end of *Delosperma* cuttings must not be less than 2 inches below the surface of the soil and the basal end of *Carpobrotus* cuttings must not be less than 4 inches below the surface of the soil.
Apply root stimulant to *Delosperma* cuttings before planting.
Do not plant *Carpobrotus* or *Delosperma* cuttings in soil that does not contain sufficient moisture at an average depth of 2 inches below the surface.

20-3.03C(3)(d)(v) Liner Plants

Plant liner plants during the period specified in the special provisions.
If a foliage protector is required, install under section 20-3.03C(3)(b).

20-3.03C(3)(d)(vi) Plug Plants

Plant plug plants during the period specified in the special provisions.

20-3.03C(3)(d)(vii) Seedling Plants

Plant seedling plants during the period specified in the special provisions.

20-3.03C(3)(e) Sod

After all other planting is performed, grade sod areas to drain and to a smooth and uniform surface.
Fine grade and roll sod areas before placing sod.
Areas adjacent to sidewalks, edging, and other paved borders and surfaced areas must be 1 inch below the finished surface elevation of the facilities, after fine grading, rolling, and settlement of the soil.
Place sod such that the end of each adjacent strip is staggered a minimum of 2 feet. Place the edge and end of sod firmly against adjacent sod and against sidewalks, edging, and other paved borders and surfaced areas.

DocuSign Envelope ID: 894511EA-295B-49EB-A393-D26A6837FDD4

Lightly roll the entire sodded area to eliminate air pockets and ensure close contact with the soil after placement of sod. Water the sodded areas so that the soil is moist to a minimum depth of 4 inches after rolling. Do not allow the sod to dry out.

If irregular or uneven areas appear in the sodded areas, restore to a smooth and even appearance.

Trim sod to a uniform edge at sidewalks, edging, and other paved borders and surfaced areas. Trimming must be repeated whenever the edge of sod extends 1 inch beyond the edge of the edging, sidewalks, and other paved borders and surfaced areas. Remove and dispose of trimmed sod.

Mow sod when it has reached a height of 4 inches. Mow sod to a height of 2.5 inches.

20-3.03D Payment

Soil amendment is measured in the vehicle at the point of delivery.

Measurement for slow-release fertilizer, organic fertilizer, or iron sulfate is determined from marked weight or sack count.

Various sizes and types of plants are measured by either the product of the average plant density and the total area planted or by actual count of the living plants in place, determined by the Engineer. The average plant density is the number of living plants per sq yd determined from actual count of test areas chosen representing the total planted area. The size and location of the test areas is determined by you and the Engineer, except that the total area tested must be equal to not less than 3 percent nor more than 5 percent of the planted area being determined. The Engineer makes the final determination of the areas to be tested.

20-3.04–20-3.08 RESERVED

20-4 PLANT ESTABLISHMENT WORK

20-4.01 GENERAL

20-4.01A Summary

Section 20-4 includes specifications for performing plant establishment work.

Plant establishment consists of caring for the plants, including watering, fertilizing, pruning, replacing damaged plants, pest control, and operating and repairing of all existing irrigation facilities used and irrigation facilities installed as part of the new irrigation system.

Working days on which no work is required, as determined by the Engineer, will be credited as a plant establishment working day, regardless of whether or not you perform plant establishment work.

Working days whenever you fail to adequately perform plant establishment work will not be credited toward the plant establishment working days.

20-4.01B Definitions

Type 1 plant establishment: Plant establishment period with the number of working days specified for plant establishment beginning after all work has been completed except for plant establishment work and other bid items specified to be performed until Contract acceptance.

Type 2 plant establishment: Plant establishment period with the number of working days specified for plant establishment beginning after all planting work has been completed except for plant establishment work and other bid items specified to be performed until Contract acceptance, provided that the Contract must not be accepted unless the plant establishment work has been satisfactorily performed for at least the number of working days specified for plant establishment.

If maintenance and protection relief is granted for a completed portion of the work under section 5-1.38, Type 2 plant establishment period for the completed portion of the work is the time between completion of all planting work except for plant establishment work, and the granting of maintenance and protection relief, provided that the relief must not be granted unless the plant establishment work in the completed portion of the work has been satisfactorily performed for at least the number of working days specified for the plant establishment period.

DocuSign Envelope ID: 894511EA-295B-49EB-A393-D26A6837FDD4

20-4.01C Submittals

20-4.01C(1) General

Submit seasonal watering schedules for use during the plant establishment period within 10 days after the start of the plant establishment period. Remote irrigation control system watering schedule must utilize the remote irrigation control system software program.

Submit updated watering schedules within 5 business days after any changes have been made to the authorized schedules.

Submit a revised watering schedule for each irrigation controller not less than 30 days before completion of the plant establishment period.

20-4.01C(2) Notification

The Engineer will notify you in writing when the plant establishment period begins and will furnish statements regarding the number of working days credited to the plant establishment period after the notification.

Notify the Engineer at least 5 business days before applying each application of fertilizer.

20-4.01D Quality Control and Assurance

Provide training by a qualified person on the use and adjustment of the irrigation controllers installed, 30 days before completion of the plant establishment period.

Perform a final inspection of the plant establishment work in the presence of the Engineer between 20 and 30 days before Contract acceptance.

20-4.02 MATERIALS

20-4.02A General

Reserved

20-4.02B Fertilizers

Fertilizer must comply with section 20-3.01B(5).

20-4.03 CONSTRUCTION

20-4.03A General

Remove trash and debris.

Surplus earth accumulated in roadside clearing and planting areas must be removed.

Trim and mow turf areas as specified for sod in section 20-3.03C(3)(e). Dispose of trimmed and mowed material.

If irregular or uneven areas appear within turf areas, restore to a smooth and even appearance. Reseed turf seed areas.

Remove the tops of foliage protectors if plants become restricted.

Remove foliage protectors, including support stakes, within 30 days before the completion of the plant establishment period.

Keep plant basin walls well formed.

Clean new wye strainers and existing wye strainers that are a part of the new irrigation system annually until the completion of the plant establishment period. The last cleaning must be done within 15 days before the completion of the plant establishment period.

Remove, clean, and reinstall new filters and existing filters that are a part of the new irrigation system annually until the completion of the plant establishment period. The last cleaning must be done within 15 days before the completion of the plant establishment period.

20-4.03B Plant Growth Control

Prune plants planted as part of the Contract as authorized.

Remove plant growth that extends within 2 feet of sidewalks, curbs, dikes, shoulders, walls or fences.

DocuSign Envelope ID: 894511EA-295B-49EB-A393-D26A6837FDD4

Remove proposed and existing ground cover from within the plant basins, including basin walls, turf areas, and planting areas within edging.
Vines next to walls and fences must be kept staked and tied. Train vines on fences and walls or through cored holes in walls.

20-4.03C Fertilizers

Apply fertilizer to the plants as specified and water into the soil after each application.
Apply fertilizer at the rates shown and spread with a mechanical spreader, whenever possible.

20-4.03D Weed Control

Control weeds under section 20-1.03C(3).

20-4.03E Plant Staking

Replace the plant stakes that are inadequate to support plants with larger stakes.
Remove plant stakes when the Engineer determines they are no longer needed.

20-4.03F Replacement Plants

Replacement plants must comply with section 20-3.01C(4).
Replacement of plants up to and including the 125th plant establishment working day must be with a plant of the same size as originally specified. Plants of a larger container size than those originally specified for replacement plants may be used during the first 125 working days of the plant establishment period.
Replacement of plants after the 125th plant establishment working day must comply with the following size requirements:

Plant size (Original)	Plant size (Replacement)
Pot/liner/plug/ seedling	No. 1 container
No. 1 container	No. 5 container
No. 5 container	No. 15 container

Other replacement plants must be the same size as originally specified.
Replacement ground cover plants must comply with the following spacing requirements:

Original spacing (inches)	On center spacing of replacement ground cover plants (inches)		
	Number of completed plant establishment working days		
	1–125	126–190	191–End of plant establishment period
9	9	6	6
12	12	9	6
18	18	12	9
24	24	18	12
36	36	24	18

20-4.03G Watering

Operate the electric automatic irrigation systems in the automatic mode unless authorized.
If any component of the electric automatic irrigation system is operated manually, the day will not be credited as a plant establishment working day unless the manual operation is authorized.
Water plants utilizing the remote irrigation control system software program unless authorized.

DocuSign Envelope ID: 894511EA-295B-49EB-A393-D26A6837FDD4

Implement the watering schedule at least 10 days before completion of the plant establishment period.

20-4.04 PAYMENT

Not Used

20-5 LANDSCAPE ELEMENTS

20-5.01 GENERAL

20-5.01A General

Section 20-5 includes specifications for constructing and installing landscape elements.

20-5.01B Materials

Not Used

20-5.01C Construction

Earthwork must comply with section 19.

20-5.01D Payment

Not Used

20-5.02 EDGING

20-5.02A General

Section 20-5.02 includes specifications for constructing landscape edging.

20-5.02B Materials

20-5.02B(1) General

Reserved

20-5.02B(2) Header Board Edging

Lumber for header board edging must be one of the following types:

1. Construction grade cedar
2. Pressure-treated Douglas fir
3. Construction heart grade redwood complying with section 57-2.01B(2)

Lumber must be:

1. Rough cut from sound timber.
2. Straight. Sweep must not exceed 1 inch in 6 feet.
3. Free from loose or unsound knots. Knots must be sound, tight, well spaced, and not to exceed 2 inches in size on any face.
4. Free of shakes in excess of 1/3 the thickness of the lumber.
5. Free of splits longer than the thickness of the lumber.
6. Free of other defects that would render the lumber unfit structurally for the purpose intended.

Edging anchors for header board edging must be stakes of the size and shape shown.

20-5.02B(3) Metal Edging

Metal edging must be commercial quality, made of aluminum or steel, and have an L-shaped design. Edging must be a minimum of 4 inches in height. The thickness must be as recommended by the manufacturer for the use intended.

Edging anchors must be from the same manufacturer as the metal edging.

20-5.02B(4) High Density Polyethylene Edging

HDPE edging must be commercial quality and a minimum of 4 inches in height. The thickness must be as recommended by the manufacturer for commercial installation for the use intended.

Edging anchors must be from the same manufacturer as HDPE edging.

20-5.02B(5) Concrete Edging

Concrete for edging must be minor concrete.

DocuSign Envelope ID: 894511EA-295B-49EB-A393-D26A6837FDD4

20-5.02B(6)–20-5.02B(10) Reserved

20-5.02C Construction

20-5.02C(1) General

Where edging is used to delineate the limits of inert ground cover or mulch areas, install edging before installing inert ground cover or mulch areas.

Saw cut surfaces where (1) asphalt concrete or concrete surfacing must be removed to permit the installation of edging and (2) no joint exists between the surfacing to be removed and the surfacing to remain in place. The surfacing must be cut in a straight line to a minimum depth of 2 inches with a power-driven saw before the surfacing is removed. Spike or stake spacing must comply with the manufacturer's instructions for use and site conditions.

20-5.02C(2) Header Board Edging

Each stake must be driven flush with the top edge of the header board edging and the stake top must be beveled away from the header board at a 45 degree angle. Attach stake to header board with a minimum of two 12-penny hot dipped galvanized nails per stake.

20-5.02C(3) Metal and High Density Polyethylene Edging

Spike or stake spacing must comply with the manufacturer's instructions for use and site conditions.

20-5.02C(4) Concrete Edging

Construct and finish minor concrete edging under section 73-2.

20-5.02C(5)–20-5.02C(9) Reserved

20-5.02D Payment

Edging is measured parallel to the ground surface.

20-5.03 INERT GROUND COVERS AND MULCHES

20-5.03A General

20-5.03A(1) General

20-5.03A(1)(a) Summary

Section 20-5.03 includes specifications for installing inert ground covers and mulches.

20-5.03A(1)(b) Definitions

Reserved

20-5.03A(1)(c) Submittals

Submit:

1. Filter fabric product data including the manufacturer's product sheet and installation instructions
2. Certificate of compliance for filter fabric at least 5 business days before delivery of the material to the job site

20-5.03A(1)(d) Quality Control and Assurance

Reserved

20-5.03A(2) Materials

Soil sterilant must be oxadiazon granular preemergent and must comply with section 20-1.02C.

Filter fabric must be Class A. Staples for filter fabric must comply with section 21-1.02R.

20-5.03A(3) Construction

20-5.03A(3)(a) General

Before performing inert ground cover and mulch work, remove plants and weeds to ground level.

20-5.03A(3)(b) Earthwork

DocuSign Envelope ID: 894511EA-295B-49EB-A393-D26A6837FDD4

Excavate areas to receive inert ground cover or mulch to the depth shown. Maintain the planned flow lines, slope gradients, and contours of the job site. Grade subgrade to a smooth and uniform surface and compact to not less than 90 percent relative compaction.

20-5.03A(3)(c) Treatment of Soil

After compaction, apply soil sterilant at the maximum label rate. Do not apply soil sterilant more than 12 inches beyond the inert ground cover or mulch limits. The soil sterilant application and inert ground cover or mulch placement must be completed within the same work day.

20-5.03A(3)(d) Filter Fabric

Immediately before placing filter fabric, surfaces to receive filter fabric must be free of loose or extraneous material and sharp objects that may damage the filter fabric during installation.
Align fabric and place in a wrinkle-free manner.
Overlap adjacent rolls of the fabric from 12 to 18 inches. Spread each overlapping roll in the same direction. Fasten fabric with staples flush with the adjacent fabric to prevent movement of fabric by placement of inert ground cover or mulch.
Repair or replace fabric damaged during placement of inert ground cover or mulch with sufficient fabric to comply with overlap requirements.

20-5.03A(4) Payment

Not Used

20-5.03B Rock Blanket

20-5.03B(1) General

20-5.03B(1)(a) Summary

Section 20-5.03B includes specifications for placing rock blanket.

20-5.03B(1)(b) Definitions

Reserved

20-5.03B(1)(c) Submittals

Submit a 1 sq yd sample of the various rock sizes.

20-5.03B(1)(d) Quality Control and Assurance

Reserved

20-5.03B(2) Materials

20-5.03B(2)(a) General

Do not use filter fabric.

20-5.03B(2)(b) Concrete

Concrete must be minor concrete.

20-5.03B(2)(c) Rock

Rock must be clean, smooth, and obtained from a single source and must comply with the following grading requirements:

Grading Requirements

Screen size (inches)	Percentage passing
8	100
6	50-85
4	0-50

20-5.03B(2)(d) Mortar

Mortar must comply with section 51-1.02F.

DocuSign Envelope ID: 894511EA-295B-49EB-A393-D26A6837FDD4

20-5.03B(3) Construction

Place concrete as shown.
Rock must be placed while concrete is still plastic. Remove concrete adhering to the exposed surfaces of the rock.
Loose rocks or rocks with a gap greater than 3/8 inch must be reset by an authorized method. The rock gap is measured from the edge of the rock to the surrounding concrete bedding.
Place mortar as shown.

20-5.03B(4) Payment

Rock blanket is measured parallel to the rock blanket surface.

20-5.03C Gravel Mulch

20-5.03C(1) General

20-5.03C(1)(a) Summary

Section 20-5.03C includes specifications for placing gravel mulch.

20-5.03C(1)(b) Definitions

Reserved

20-5.03C(1)(c) Submittals

Submit a 5-lb sample of the gravel mulch.

20-5.03C(1)(d) Quality Control and Assurance

Reserved

20-5.03C(2) Materials

Gravel mulch must be:

1. Uniform gray color
2. From a single source only
3. Crushed rock that complies with the following grading requirements:

Grading Requirements

Sieve size	Percent passing
1-1/4 inch	100
3/4 inch	60-80
1/2 inch	45-65
No. 40	5-20

20-5.03C(3) Construction

Place gravel and compact by rolling.
The finished gravel mulch surface must be smooth and uniform, maintaining original flow lines, slope gradients, and contours of the job site.

20-5.03C(4) Payment

Gravel mulch is measured parallel to the gravel mulch surface.

20-5.03D Decomposed Granite

20-5.03D(1) General

20-5.03D(1)(a) Summary

Section 20-5.03D includes specifications for placing decomposed granite.

20-5.03D(1)(b) Definitions

Reserved

20-5.03D(1)(c) Submittals

Five business days before delivery of the materials to the job site, submit:

DocuSign Envelope ID: 894511EA-295B-49EB-A393-D26A6837FDD4

1. Solidifying emulsion product data including the manufacturers' product sheets and installation instructions
2. Certificate of compliance for solidifying emulsion
3. 5-lb sample of the decomposed granite

20-5.03D(1)(d) Quality Control and Assurance

Test plot must be:
1. Constructed at an authorized location
2. At least 3 by 12 feet
3. Constructed using the materials, equipment, and methods to be used in the work
4. Authorized before starting work

Notify the Engineer not less than 7 days before constructing the test plot.
The Engineer uses the authorized test plot to determine acceptability of the work.
If ordered, prepare additional test plots. Additional test plots are change order work.
If the test plot is not incorporated into the work, the Engineer may order you to remove it.

20-5.03D(2) Materials

20-5.03D(2)(a) General

Decomposed granite must be:
1. Uniform gray or tan color
2. From one source only
3. Crushed granite rock that complies with grading requirements shown in the following table:

Grading Requirements

Sieve size	Percent passing
3/8 inch	100
No. 4	95–100
No. 8	75–80
No. 16	55–65
No. 30	40–50
No. 50	25–35
No. 100	20–25
No. 200	5–15

Note:
Grading based upon AASHTO T11-82 and T27-82

20-5.03D(2)(b) Solidifying Emulsion

Solidifying emulsion must be either a water-based polymer or nontoxic organic powdered binder specifically manufactured to harden decomposed granite. The solidifying emulsion must not alter the decomposed granite color.

20-5.03D(3) Construction

Do not place decomposed granite during rainy conditions.
Mix solidifying emulsion thoroughly and uniformly throughout the decomposed granite and under the manufacturer's instructions. Mix the material in the field using portable mixing equipment, or delivered in mixer trucks from a local ready-mixed plant.
Place decomposed granite uniformly in layers no more than 1-1/2 inch thick. Compact each layer of decomposed granite to a relative compaction of not less than 90 percent. Begin compaction within 6 to 48 hours of placement.

DocuSign Envelope ID: 894511EA-295B-49EB-A393-D26A6837FDD4

If the material was mixed in the field, apply an application of solidifying emulsion after compaction as recommended by the manufacturer. Prevent runoff or overspray of solidifying emulsion onto adjacent paved or planting areas.

The finished decomposed granite surface must be smooth and uniform, compacted to a relative compaction of not less than 90 percent, maintaining original flow lines, slope gradients, and contours of the job site.

20-5.03D(4) Payment

Not Used

20-5.03E Wood Mulch

20-5.03E(1) General

20-5.03E(1)(a) Summary

Section 20-5.03E includes specifications for placing wood mulch.

20-5.03E(1)(b) Definitions

Reserved

20-5.03E(1)(c) Submittals

Submit a certificate of compliance for mulch.

Submit a 2 cu ft mulch sample with the mulch source listed on the bag and obtain approval before delivery of mulch to the job site.

20-5.03E(1)(d) Quality Control and Assurance

Reserved

20-5.03E(2) Materials

20-5.03E(2)(a) General

Mulch must not contain more than 0.1 percent of deleterious materials such as rocks, glass, plastics, metals, clods, weeds, weed seeds, coarse objects, sticks larger than the specified particle size, salts, paint, petroleum products, pesticides or other chemical residues harmful to plant or animal life.

Do not use filter fabric.

20-5.03E(2)(b) Tree Bark Mulch

Tree bark mulch must be derived from cedar, Douglas fir, or redwood species.

Tree bark mulch must be ground so that at least 95 percent of the material by volume is less than 2 inches and no more than 30 percent by volume is less than 1 inch.

20-5.03E(2)(c) Wood Chip Mulch

Wood chip mulch must:

1. Be derived from clean wood
2. Not contain leaves or small twigs
3. Contain at least 95 percent wood chips by volume with average thickness of 1/16 to 3/8 inch in any direction and 1/2 to 3 inches in length

20-5.03E(2)(d) Shredded Bark Mulch

Shredded bark mulch must:

1. Be derived from trees
2. Be a blend of loose, long, thin wood, or bark pieces
3. Contain at least 95 percent wood strands by volume with average thickness of 1/8 to 1-1/2 inches in any direction and 2 to 8 inches in length

20-5.03E(2)(e) Tree Trimming Mulch

Tree trimming mulch must:

DocuSign Envelope ID: 894511EA-295B-49EB-A393-D26A6837FDD4

1. Be derived from chipped trees and may contain leaves and small twigs.
2. Contain at least 95 percent material by volume less than 3 inches and no more than 30 percent by volume less than 1 inch

20-5.03E(2)(f)–20-5.03E(2)(j) Reserved

20-5.03E(3) Construction

Spread mulch placed in areas outside of plant basins to a uniform thickness as shown.
Mulch must be placed at the rate described and placed in the plant basins or spread in areas as shown after the plants have been planted. Mulch placed in plant basins must not come in contact with the plant crown and stem.
Spread mulch from the outside edge of the proposed plant basin or plant without basin to the adjacent edges of shoulders, paving, retaining walls, dikes, edging, curbs, sidewalks, walls, fences, and existing plantings. If the proposed plant or plant without basin is 12 feet or more from the adjacent edges of shoulders, paving, retaining walls, dikes, edging, curbs, sidewalks, walls, fences, and existing plantings, spread the mulch 6 feet beyond the outside edge of the proposed plant basin or plant without basin.
Do not place mulch within 4 feet of:

1. Flow line of earthen drainage ditches
2. Edge of paved ditches
3. Drainage flow lines

20-5.03E(4) Payment

Mulch is measured in the vehicle at the point of delivery.

20-5.03F–20-5.03J Reserved

20-5.04 RESERVED

Reserved

20-5.05 SITE FURNISHINGS

20-5.05A General

Section 20-5.05 includes specifications for installing site furnishings.

20-5.05B–20-5.05Z Reserved

20-5.06–20-5.10 RESERVED

^^

21 EROSION CONTROL

07-19-13

Replace ", bonded fiber matrix, and polymer-stabilized fiber matrix" in the 1st paragraph of section 21-1.01B with:

04-20-12

and bonded fiber matrix

04-20-12

Delete the last paragraph of section 21-1.02E.

DocuSign Envelope ID: 894511EA-295B-49EB-A393-D26A6837FDD4

Replace section 21-1.02F(2) with:

04-20-12

21-1.02F(2) Reserved

Replace "20-7.02D(1)" in the 1st paragraph of section 21-1.02H with:

07-19-13

20-3.01B(4)

Replace section 21-1.02J with:

04-20-12

21-1.02J Reserved

Replace the row for organic matter content in the table in the 4th paragraph of section 21-1.02M with:

01-18-13

Organic matter content	TMECC 05.07-A Loss-on-ignition organic matter method (LOI) % dry weight basis	30–100

Replace the paragraph in section 21-1.02P with:

10-19-12

Fiber roll must be a premanufactured roll filled with rice or wheat straw, wood excelsior, or coconut fiber. Fiber roll must be covered with biodegradable jute, sisal, or coir fiber netting secured tightly at each end and must be one of the following:

1. 8 to 10 inches in diameter and at least 1.1 lb/ft
2. 10 to 12 inches in diameter and at least 3 lb/ft

Fiber roll must have a minimum functional longevity of 1 year.

Add between the 1st and 2nd paragraphs of section 21-1.03A:

01-18-13

Remove and dispose of trash, debris, and weeds in areas to receive erosion control materials.
Remove and dispose of loose rocks larger than 2-1/2 inches in maximum dimension unless otherwise authorized.
Protect the traveled way, sidewalks, lined drainage channels, and existing vegetation from overspray of hydraulically-applied material.

Replace section 21-1.03B with:

01-18-13

21-1.03B Reserved

Replace "3 passes" in item 2 in the list in the 2nd paragraph of section 21-1.03G with:

04-19-13

2 passes

Replace section 21-1.03I with:

04-20-12

21-1.03I Reserved

DocuSign Envelope ID: 894511EA-295B-49EB-A393-D26A6837FDD4

Add between the 4th and 5th paragraphs of section 21-1.03P:

10-19-12

If soil conditions do not permit driving the stakes into the soil, drill pilot holes to facilitate driving of the stakes.

01-18-13

Delete the 1st and 2nd sentences of the 3rd paragraph in section 21-1.04.

^^^

DocuSign Envelope ID: 894511EA-295B-49EB-A393-D26A6837FDD4

3. Batch volume in cu yd, the minimum is 5 cu yd
4. Type and source of ingredients used
5. Age and strength from compression strength results

Field qualification test reports must be signed by the official in responsible charge of the laboratory performing the tests.

28-2.01D Quality Control and Assurance

28-2.01D(1) General

Stop LCB activities and immediately notify the Engineer whenever:
1. Any quality control or acceptance test result does not comply with the specifications
2. Visual inspection shows noncompliant LCB

If LCB activities are stopped, before resuming activities:
1. Inform the Engineer of the adjustments you will make
2. Remedy or replace the noncompliant LCB
3. Obtain authorization

Molds for compressive strength testing under ASTM C 31 or ASTM C 192 must be 6 by 12 inches. Quality control and assurance for cementitious materials and admixtures must comply with section 90-1.01D(1)

28-2.01D(2) Aggregate Qualification Testing

Qualify the aggregate for each proposed aggregate source and gradation. Qualification tests include (1) sand equivalent and (2) average 7-day compressive strength under ASTM C 39 on 3 specimens manufactured under ASTM C 192. The cement content for this test must be 300 lb/cu yd, and the 7-day average compressive strength must be at least 610 psi. Cement must be Type II portland cement under section 90-1.02B(2).

LCB must have from 3 to 4 percent air content during aggregate qualification testing.

28-2.01D(3) Field Qualification Testing

Before placing LCB, you must perform field qualification testing and obtain authorization for each mix design. Retest and obtain authorization for changes to authorized mixed designs.

Proposed mix designs must be field qualified before you place the LCB represented by those mix designs. Use an American Concrete Institute (ACI) certified "Concrete Laboratory Technician, Grade I" to perform field qualification tests and calculations.

Notify the Engineer at least 5 days before field qualification. Perform field qualification within the job site or a location authorized by the Engineer.

Field qualification testing includes compressive strength, air content, and penetration or slump in compliance with the table titled "Quality Control Requirements."

Field qualification testing for compressive strength must comply with the following:
1. Manufacture 12 cylinders under ASTM C 31 from a single batch
2. Perform 3 tests; each test consists of determining the average compressive strength of 2 cylinders at 7 days under ASTM C 39
3. The average compressive strength for each test must be at least 530 psi

If you submitted a notice to produce LCB qualifying for a transverse contraction joint waiver, manufacture additional specimens and test LCB for compressive strength at 3 days. Prepare compressive strength cylinders under ASTM C 31 at the same time using the same material and procedures as the 7-day compressive strength cylinders except do not submit 6 additional test cylinders. The average 3-day compressive strength for each test must be not more than 500 psi.

DocuSign Envelope ID: 894511EA-295B-49EB-A393-D26A6837FDD4

28-2.01D(4) Quality Control Testing

Provide a testing laboratory to perform quality control tests. Maintain sampling and testing equipment in proper working condition. Perform sampling under California Test 125.

Testing laboratories and testing equipment must comply with the Department's Independent Assurance Program.

Perform quality control sampling, testing, and inspection throughout LCB production and placement. LCB must comply with the requirements for the quality characteristics shown in the following table:

Quality Control Requirements

Quality characteristic	Test method	Minimum sampling and testing frequency	Requirement
Sand equivalent (min)	ASTM D 2419	1 per 500 cubic yards but at least 1 per day of production	18
Aggregate gradation	ASTM C 136		Note a
Air content (max, percent) [b]	ASTM C 231		4
Penetration (inches)	ASTM C 360		0 to 1-1/2 nominal [c, d]
Slump (inches)	ASTM C 143		0–3 nominal [c, d]
Compressive strength (min, psi at 7 days)	ASTM C 39 [e]		530
Compressive strength (max, psi at 3 days) [f]	ASTM C 39 [e]		500

[a] Comply with the table titled "Aggregate Grading" in section 28-2.02C.
[b] If no single test in the first 5 air content tests exceeds 1-1/2 percent, no further air content tests are required.
[c] Maximum penetration must not exceed 2 inches and maximum slump must not exceed 4 inches
[d] Test for either penetration or slump
[e] Prepare cylinders under ASTM C 31
[f] Only applicable if you (1) submitted a notice stating intent to produce LCB qualifying for a transverse contraction joint waiver and (2) successfully field qualified the LCB for 3-day compressive strength. Make cylinders at the same time using the same material and procedures as QC testing for 7-day compressive strength.

28-2.01D(5) Acceptance Criteria

For acceptance, properties of LCB must comply with values shown in the following table:

Acceptance Criteria Testing

Property	Test method	Value
Compressive strength (min, psi at 7 days)	ASTM C 39 [a]	530 [b]

[a] Cylinders prepared under ASTM C 31
[b] A compressive strength test represents up to (1) 1,000 cu yd or (2) 1 day's production if less than 1,000 cu yd.

28-2.02 MATERIALS

28-2.02A General

Water must comply with section 90-1.02D.

The air content in LCB must not exceed 4 percent. If the aggregate used for LCB is produced from processed reclaimed asphalt concrete or other material that may cause the air content to exceed 4 percent, reduce the air content with an admixture.

A water-reducing chemical admixture may be used. Water-reducing chemical admixture must comply with ASTM C 494, Type A or Type F.

Air-entraining admixtures must comply with section 90-1.02E.

DocuSign Envelope ID: 894511EA-295B-49EB-A393-D26A6837FDD4

28-2.02B Cementitious Material

Portland cement must comply with section 90-1.02B. Portland cement content must not exceed 300 lb/cu yd.

SCM must comply with section 90-1.02B except the equations for SCM content under 90-1.02B(3) do not apply.

For aggregate qualification testing, use Type II portland cement under section 90-1.02B(2) without SCM.

28-2.02C Aggregate

Aggregate must be clean and free from decomposed material, organic material, and other deleterious substances. Aggregate samples must not be treated with lime, cement, or chemicals before testing for sand equivalent.

Use either 1-1/2 inch or 1 inch grading. Do not change your selected aggregate grading without authorization.

When tested under ASTM C 136, the percentage composition by weight of the aggregate must comply with the grading requirements for the sieve sizes shown in the following table:

Aggregate Grading

Sieve sizes	Percentage passing			
	1-1/2" maximum		1" maximum	
	Operating range	Contract compliance	Operating range	Contract compliance
2"	100	100	--	--
1-1/2"	90-100	87-100	100	100
1"	--	--	90-100	87-100
3/4"	50-85	45-90	50-100	45-100
3/8"	40-75	35-80	40-75	35-80
No. 4	25-60	20-65	35-60	30-65
No. 30	10-30	6-34	10-30	6-34
No. 200	0-12	0-15	0-12	0-15

Aggregate must comply with the quality requirements shown in the following table:

Aggregate Quality

Property	Test Method	Operating range	Contract compliance
Sand equivalent (min)	ASTM D 2419	21	18
Compressive strength (min, psi at 7 days)	ASTM C 192 ASTM C 39	--	610 at 300 lb/cu yd cement content

Note: Cement must be Type II portland cement under section 90-1.02B(2).

If the aggregate grading or the sand equivalent test results, or both comply with contract compliance requirements but not operating range requirements, you may continue placing LCB for the remainder of the work day. Do not place additional LCB until you demonstrate the LCB to be placed complies with the operating range requirements.

28-2.03 CONSTRUCTION

28-2.03A General

Do not allow traffic or equipment on the LCB for at least 72 hours after the 1st application of the curing compound and completion of contraction joints. Limit traffic and equipment on the LCB to that is required for placing additional layers of LCB or paving.

28-2.03B Subgrade

Immediately before spreading LCB, the subgrade must:

1. Comply with the specified compaction and elevation tolerance for the material involved

DocuSign Envelope ID: 894511EA-295B-49EB-A393-D26A6837FDD4

2. Be free from loose or extraneous material
3. Be uniformly moist

Areas of subgrade lower than the grade established by the Engineer must be filled with LCB. The Department does not pay for filling low areas of subgrade.

28-2.03C Proportioning, Mixing, and Transporting

Proportion LCB under section 90-1.02F except aggregate does not have to be separated into sizes. Mix and transport LCB under section 90-1.02G except the 5th and 7th paragraphs in section 90-1.02G(6) do not apply.

28-2.03D Placing

Place LCB under section 40-1.03H(1) except the 3rd paragraph does not apply.
Unless otherwise described, construct LCB in minimum widths of 12 feet separated by construction joints. For LCB constructed monolithically in widths greater than 26 feet, construct a longitudinal contraction joint offset no more than 3 feet from the centerline of the width being constructed.
Contraction joints must comply with section 40-1.03D(3).
Construct transverse contraction joints in intervals that result in LCB areas where the lengths and widths are within 20 percent of each other. Measure the widths from any longitudinal construction or longitudinal contraction joints.
The Engineer waives the requirement for transverse contraction joints if you:
1. Submitted a notice under 28-2.01C(1)
2. Successfully field qualified LCB for 3-day compressive strength testing
3. Submit QC test results for 3-day compressive strength under section 28-2.01D(4).

If concrete pavement will be placed on LCB, construct longitudinal construction and longitudinal contraction joints in the LCB. Provide at least 1 foot horizontal clearance from planned longitudinal construction and longitudinal contraction joints in the concrete pavement.
Do not mix or place LCB when the atmospheric temperature is below 35 degrees F. Do not place LCB on frozen ground.

28-2.03E Finishing

Place LCB under section 40-1.03H(4) or under section 40-1.03H(5) except where there are confined work areas and when authorized:
1. Spread and shape LCB using suitable powered finishing machines and supplement with hand work as necessary
2. Consolidate LCB using high-frequency internal vibrators within 15 minutes after LCB is deposited on the subgrade
3. Vibrate with care such that adequate consolidation occurs across the full paving width and do not use vibrators for extensive weight shifting of the LCB

For LCB to be paved with HMA, before curing operation texture the LCB finished surface by dragging a broom, burlap, or a spring steel tine device. If using a spring steel tine device, the device must produce a scored surface with scores parallel or transverse to the pavement centerline. Texture at a time and in a manner that produces the coarsest texture for the method used.
For LCB to be paved with HMA, the finished surface must not vary more than 0.05 foot from the grade established by the Engineer.
Do not texture LCB that will be covered with concrete pavement. Before applying curing compound, finish LCB to a smooth surface free from mortar ridges and other projections.
For LCB to be paved with concrete pavement, the finished surface must not be above the grade, or more than 0.05 foot below the grade established by the Engineer.

DocuSign Envelope ID: 894511EA-295B-49EB-A393-D26A6837FDD4

The finished surface must be free from porous areas.

28-2.03F Curing

After finishing LCB, cure LCB with pigmented curing compound under section 90-1.03B(3) and 40-1.03K except for LCB to be paved with concrete pavement, comply with section 36-2. Apply curing compound to the area to be paved with concrete pavement:

1. In 2 separate applications
2. Before the atmospheric temperature falls below 40 degrees F
3. At a rate of 1 gal/150 sq ft for the first application
4. At a rate of 1 gal/200 sq ft for the second application. Within 4 days after the first application, clean the surface and apply the second application.

Immediately repair damage to the curing compound or LCB.

28-2.03G Surfaces Not Within Tolerance

Where LCB will be paved with concrete pavement, remove the base wherever the surface is higher than the grade established by the Engineer and replace it with LCB. Where LCB will not be paved with concrete pavement, remove the base wherever the surface is higher than 0.05 foot above the grade established by the Engineer and replace it with LCB. If authorized, grind the surface with either a diamond or carborundum blade to within tolerance. After grinding LCB to be paved with concrete pavement and after all free water has left the surface, clean foreign material and grinding residue from the surface. Apply curing compound to the ground area at a rate of approximately 1 gal/150 sq ft.

Where the surface of LCB is lower than 0.05 foot from the grade established by the Engineer, remove the base and replace it with LCB or, if authorized, fill low areas according to the pavement material as follows:

1. For HMA pavement, fill low areas with HMA that complies with the specifications for the lowest layer of pavement. Do not fill low areas concurrently with the paving operation.
2. For concrete pavement, fill low areas with pavement concrete concurrent with the paving operation.

28-2.04 PAYMENT

LCB is measured from the dimensions shown.

Replace section 28-3 with:

07-19-13

28-3 RAPID STRENGTH CONCRETE BASE

Reserved

Replace section 28-4 with:

07-19-13

28-4 LEAN CONCRETE BASE RAPID SETTING

Reserved

Replace section 28-5 with:

07-19-13

28-5 CONCRETE BASE

Reserved

DocuSign Envelope ID: 894511EA-295B-49EB-A393-D26A6837FDD4

Add to section 28:

07-19-13

28-6–28-14 RESERVED

28-15 REPLACE BASE

Reserved

^^^

DocuSign Envelope ID: 894511EA-295B-49EB-A393-D26A6837FDD4

Replace section 30 with:

04-20-12

30 RECLAIMED PAVEMENTS

04-20-12

30-1 GENERAL

30-1.01 GENERAL

Section 30 includes specifications for reclaiming the pavement section and constructing a base.

30-2 FULL DEPTH RECLAIMED—FOAMED ASPHALT

Reserved

30-3–30-6 RESERVED

^^^

DocuSign Envelope ID: 894511EA-295B-49EB-A393-D26A6837FDD4

Prepaving conference attendees must sign an attendance sheet provided by the Engineer. The prepaving conference must be attended by your:

1. Project superintendent
2. Paving construction foreman
3. Traffic control foreman

Be prepared to discuss:

1. Quality control
2. Acceptance testing
3. Placement
4. Training on placement methods
5. Checklist of items for proper placement
6. Unique issues specific to the project, including:
   - 6.1. Weather
   - 6.2. Alignment and geometrics
   - 6.3. Traffic control issues
   - 6.4. Haul distances
   - 6.5. Presence and absence of shaded areas
   - 6.6. Any other local issues

37-1.02 MATERIALS

Not Used

37-1.03 CONSTRUCTION

Not Used

37-1.04 PAYMENT

Not Used

Replace section 37-2 with:

07-19-13

37-2 SEAL COATS

37-2.01 GENERAL

37-2.01A General

37-2.01A(1) Summary

Section 37-2 includes specifications for applying seal coats.

37-2.01A(2) Definitions

Reserved

37-2.01A(3) Submittals

Reserved

37-2.01A(4) Quality Control and Assurance

The following personnel must attend the prepaving conference:

1. Aggregate suppliers
2. Chip spreader operators
3. Emulsion and binder distributor
4. Coated chips producer if coated chips are used

37-2.01B Materials

Screenings must be broken stone, crushed gravel, or both. At least 90 percent of screenings by weight must be crushed particles as determined under California Test 205.

DocuSign Envelope ID: 894511EA-295B-49EB-A393-D26A6837FDD4

Screenings for seal coats must have the properties specified in the following table:

Seal Coat Screenings

Properties	Test method	Specification
Los Angeles Rattler, %, max Loss at 100 revolutions. Loss at 500 revolutions.	California Test 211	 10 40
Film stripping, %, max	California Test 302	25

37-2.01C Construction

37-2.01C(1) General

Wherever final sweeping or brooming of the seal coat surface is complete, place permanent traffic stripes and pavement markings within 10 days.

If you fail to place the permanent traffic stripes and pavement markings within the specified time, the Department withholds 50 percent of the estimated value of the seal coat work completed that has not received permanent traffic stripes and pavement markings.

37-2.01C(2) Equipment

Equipment for seal coats must include and comply with the following:

1. Screenings haul trucks. Haul trucks must have:
   - 1.1. Tailgates that discharge screenings
   - 1.2. Devices to lock onto the rear screenings spreader hitch
   - 1.3. Dump beds that will not push down on the spreader when fully raised
   - 1.4. Dump beds that will not spill screenings on the roadway when transferred to the spreader hopper
   - 1.5. Tarpaulins to cover precoated screenings when haul distance exceeds 30 minutes or ambient temperature is less than 65 degrees F
2. Self-propelled screenings spreader. The spreader must have:
   - 2.1. Screenings hopper in the rear
   - 2.2. Belt conveyors that carry the screenings to the front
   - 2.3. Spreading hopper capable of providing a uniform screening spread rate over the entire width of the traffic lane in 1 application.
3. Self-propelled power brooms. Do not use gutter brooms or steel-tined brooms. Brooms must be capable of removing loose screenings adjacent to barriers that prevent screenings from being swept off the roadway, including curbs, gutters, dikes, berms, and railings.
4. Pneumatic-tired rollers. Pneumatic-tired rollers must be an oscillating type at least 4 feet wide. Each roller must be self-propelled and reversible. Pneumatic tires must be of equal size, diameter, type, and ply. The roller must carry at least 3,000 lb of load on each wheel and each tire must have an air pressure of 100 ± 5 psi.

37-2.01C(3) Surface Preparation

Before applying seal coat, cover manholes, valve and monument covers, grates, or other exposed facilities located within the area of application, using a plastic or oil resistant construction paper secured by tape or adhesive to the facility being covered. Reference the covered facilities with a sufficient number of control points to relocate the facilities after the application of the seal coat. After completion of the seal coat operation, remove covers from the facilities.

Immediately before applying seal coat, clean the surface to receive seal coat by removing extraneous material and drying. Cleaning the existing pavement includes the use of brooms.

DocuSign Envelope ID: 894511EA-295B-49EB-A393-D26A6837FDD4

37-2.01C(4) Applying Emulsion and Asphalt Binder

Prevent spray on existing pavement not intended for seal coat or on previously applied seal coat using a material such as building paper. Remove the material after use.
Align longitudinal joints between seal coat applications with designated traffic lanes.
For emulsion, overlap longitudinal joints by not more than 4 inches. You may overlap longitudinal joints up to 8 inches if authorized.
For areas not accessible to a truck distributor bar, apply the emulsion with a squeegee or other authorized means. For asphalt binder, hand spray nonaccessible areas. You may overlap the emulsion or asphalt binder applications before the application of screenings at longitudinal joints.
Do not apply the emulsion or asphalt binder unless there are sufficient screenings at the job site to cover the emulsion or asphalt binder.
Discontinue application of emulsion or asphalt binder early enough to comply with lane closure specifications and darkness. Apply to 1 lane at a time and cover the lane entirely in 1 operation.

37-2.01C(5) Spreading Screenings

Prevent vehicles from driving on asphaltic emulsion or asphalt binder before spreading screenings.
Spread screenings at a uniform rate over the full lane width in 1 application.
Broom excess screenings at joints before spreading adjacent screenings.
Operate the spreader at speeds slow enough to prevent screenings from rolling over after dropping. If the spreader is not moving, screenings must not drop. If you stop spreading and screenings drop, remove the excess screenings before resuming activities.

37-2.01C(6) Finishing

Remove piles, ridges, or unevenly distributed screenings. Repair permanent ridges, bumps, or depressions in the finished surface. Spread additional screenings and roll if screenings are picked up by rollers or vehicles.
Seal coat joints between adjacent applications of seal coat must be smooth, straight, uniform, and completely covered. Longitudinal joints must be at lane lines and not overlap by more than 4 inches. Blend the adjacent applications by brooming.
A coverage is the number of passes a roller needs to cover the width. A pass is 1 roller movement parallel to the seal coat application in either direction. Overlapping passes are part of the coverage being made and are not part of a subsequent coverage. Do not start a coverage until completing the previous coverage.
Before opening to traffic, finish seal coat in the following sequence:

1. Perform initial rolling consisting of 1 coverage with a pneumatic-tired roller
2. Perform final rolling consisting of 3 coverages with a pneumatic-tired roller
3. Broom excess screenings from the roadway and adjacent abutting areas
4. Apply flush coat if specified

The Engineer may order salvaging of excess screenings.
Dispose of excess screenings the Engineer determines are not salvageable. Dispose of screenings in any of the following ways or locations:

1. Under section 14-10
2. On embankment slopes
3. In authorized areas

Salvaging and stockpiling excess screenings is change order work.

37-2.01C(7) Seal Coat Maintenance

Seals coat surfaces must be maintained for 4 consecutive days from the day screenings are applied. Maintenance must include brooming to maintain a surface free of loose screenings, to distribute

DocuSign Envelope ID: 894511EA-295B-49EB-A393-D26A6837FDD4

screenings over the surface so as to absorb any free asphaltic material, to cover any areas deficient in cover coat material, and to prevent formation of corrugations.

After 4 consecutive days, excess screenings must be removed from the paved areas. Brooming must not displace screenings set in asphaltic material.

The exact time of brooming will be determined by the Engineer. As a minimum, brooming will be required at the following times:

1. On 2-lane 2-way roadways, from 2 to 4 hours after traffic, controlled with pilot cars, has been routed on the seal coat
2. On multilane roadways, from 2 to 4 hours after screenings have been placed
3. In addition to previous brooming, immediately before opening any lane to public traffic, not controlled with pilot cars
4. On the morning following the application of screenings on any lane that has been open to public traffic not controlled with pilot cars and before starting any other activities

For 2-lane 2-way roadways under 1-way traffic control, upon completion of secondary rolling, public traffic must be controlled with pilot cars and routed over the new seal coat for a period of 2 to 4 hours. The Engineer will determine the exact period of time.

Schedule the operations so that seal coat is placed on both lanes of the traveled way each work shift and so that 1-way traffic control is discontinued 1 hour before darkness. At the end of the work shift, the end of the seal coat on both lanes must generally match.

On multilane roadways, initial brooming must begin after the screenings have been in place for a period of 2 to 4 hours. If the initial brooming is not completed during the work shift in which the screenings were placed, the initial brooming must be completed at the beginning of the next work shift.

Public traffic must be controlled with pilot cars and be routed on the new seal coat surface of the lane for a minimum of 2 hours after completion of the initial brooming and before opening the lane to traffic not controlled with pilot cars. When traffic is controlled with pilot cars, a maximum of 1 lane in the direction of travel must be open to public traffic. Once traffic controlled with pilot cars is routed over the seal coat at a particular location, continuous control must be maintained at that location until the seal coat placement and brooming on adjacent lanes to receive seal coat is completed.

37-2.01D Payment

If there is no bid item for a traffic control system, furnishing and using a pilot car is included in the various items of the work involved in applying the seal coat.

If test results for the screenings grading do not comply with specifications, you may remove the seal coat represented by these tests or request that it remain in place with a payment deduction. The deduction is $1.75 per ton for the screenings represented by the test results.

37-2.02 FOG SEAL

37-2.02A General

37-2.02A(1) Summary

Fog seal coat includes applying a slow-setting asphaltic emulsion.

37-2.02A(2) Definitions

Reserved

37-2.02A(3) Submittals

Submit a 1/2-gallon sample of the asphaltic emulsion in a plastic container. Take the sample from the distributor truck spray bar at mid-load.

37-2.02A(4) Quality Control and Assurance

Reserved

DocuSign Envelope ID: 894511EA-295B-49EB-A393-D26A6837FDD4

37-2.02B Material

The Engineer selects the grade of slow-setting asphaltic emulsion to be used.
If additional water is added to the asphaltic emulsion, the resultant mixture must not be more than 1 part asphaltic emulsion to 1 part water. The Engineer determines the exact amount of additional water.

37-2.02C Construction

Apply asphaltic emulsion for fog seal coat at a residual asphalt rate from 0.02 to 0.06 gal/sq yd. The Engineer determines the exact rate.
Apply fog seal coat when the ambient air temperature is above 40 degrees F.
Sprinkle water on fog seal coat that becomes tacky in an amount determined by the Engineer.
If fog seal coat and seal coat with screenings are specified on the same project, apply fog seal coat at least 4 days before applying the adjoining seal coat with screenings. The joint between the seal coats must be neat and uniform.

37-2.02D Payment

The Department does not adjust the unit price for an increase or decrease in the asphaltic emulsion (fog seal coat) quantity.

37-2.03 FLUSH COATS

37-2.03A General

03-21-14

Flush coat includes applying a fog seal coat to the surface, followed by sand.

07-19-13

37-2.03B Material

The Engineer selects the grade of slow-setting or quick-setting asphaltic emulsion to be used.
Sand for flush coat must comply with the material specifications for fine aggregate grading in section 90-1.02C(3). Sand must not include organic material or clay.

37-2.03C Construction

Apply asphaltic emulsion for flush coat at a residual asphalt rate from 0.02 to 0.06 gal/sq yd. The Engineer determines the exact rate.
During flush coat activities, close adjacent lanes to traffic. Do not track asphaltic emulsion on existing pavement surfaces.
Apply sand immediately after the asphaltic emulsion application.
Spread sand with a self-propelled screenings spreader equipped with a mechanical device that spreads sand at a uniform rate over the full width of a traffic lane in a single application. Spread sand at a rate from 2 to 6 lb/sq yd. The Engineer determines the exact rate.

37-2.03D Payment

The Department does not adjust the unit price for an increase or decrease in the sand cover for the flush coat quantity.

37-2.04 ASPHALTIC EMULSION SEAL COAT

37-2.04A General

37-2.04A(1) General

37-2.04A(1)(a) Summary

Section 37-2.04 includes specifications for applying asphaltic emulsion seal coat. Asphaltic emulsion seal coat includes applying asphaltic emulsion, followed by screenings, and then a flush coat.
Asphaltic emulsion seal coat includes one or more of the following types:

1. Nonpolymer asphaltic emulsion seal coat

DocuSign Envelope ID: 894511EA-295B-49EB-A393-D26A6837FDD4

2. Polymer asphaltic emulsion seal coat

A double asphaltic emulsion seal coat is the application of asphaltic emulsion, followed by screenings applied twice in sequence.

37-2.04A(1)(b) Definitions

Reserved

37-2.04A(1)(c) Submittals

At least 10 days before starting asphaltic emulsion seal coat application, submit the name of an authorized laboratory that will be performing asphaltic emulsion QC testing.

03-21-14

Submit a sample of asphaltic emulsion in a 1/2-gallon plastic container to the Engineer and to the authorized laboratory. Each sample must be submitted in an insulated shipping container within 24 hours of sampling.

07-19-13

Within 7 days after taking samples, submit the authorized laboratory's test results for asphaltic emulsion.

37-2.04A(1)(d) Quality Control and Assurance

Samples for the screenings grading and cleanness value must be taken from the spreader conveyor belt.

03-21-14

Within 3 business days of sampling, the authorized laboratory must test the asphaltic emulsion for:

1. Viscosity under AASHTO T 59
2. Sieve test under AASHTO T 59
3. Demulsibility under AASHTO T 59
4. Torsional recovery under California Test 332 for polymer asphaltic emulsion
5. Elastic recovery under AASHTO T 301 for polymer asphaltic emulsion

Circulate asphaltic emulsion in the distributor truck before sampling. Take samples from the distributor truck at mid load or from a sampling tap or thief. Before taking samples, draw and dispose of 1 gallon. In the presence of the Engineer take two 1/2-gallon samples every 55 tons or at least 1 day's production.

07-19-13

37-2.04A(2) Materials

Not Used

37-2.04A(3) Construction

The Engineer determines the exact application rate.

At the time of application, the temperature of the asphaltic emulsion must be from 130 to 180 degrees F.

When tested under California Test 339, the application rate for asphaltic emulsion must not vary from the average by more than:

1. 15 percent in the transverse direction
2. 10 percent in the longitudinal direction

37-2.04A(4) Payment

Not Used

37-2.04B Nonpolymer Asphaltic Emulsion Seal Coat

37-2.04B(1) General

37-2.04B(1)(a) Summary

DocuSign Envelope ID: 894511EA-295B-49EB-A393-D26A6837FDD4

Section 37-2.04B includes specifications for applying a nonpolymer asphaltic emulsion seal coat.

37-2.04B(1)(b) Definitions

Reserved

37-2.04B(1)(c) Submittals

Reserved

37-2.04B(1)(d) Quality Control and Assurance

For nonpolymer asphaltic emulsion seal coat, if a test result for the screenings cleanness value is from 75 to 80, you may request that the asphaltic emulsion seal coat represented by the test remain in place. A payment deduction is made as specified in section 37-2.04D. If the screenings cleanness value is less than 75, remove the asphaltic emulsion seal coat.

37-2.04B(2) Materials

Screenings for nonpolymer asphaltic emulsion seal coat must have the gradation as determined under California Test 202 in the following table.

Nonpolymer Asphaltic Emulsion Seal Coat Screenings Gradation

	Percentage passing			
Sieve sizes	Coarse 1/2" max	Medium 3/8" max	Medium fine 5/16" max	Fine 1/4" max
3/4"	100	--	--	--
1/2"	95–100	100	--	--
3/8"	50–80	90–100	100	100
No. 4	0–15	5–30	30–60	60–85
No. 8	0–5	0–10	0–15	0–25
No. 16	--	0–5	0–5	0–5
No. 30	--	--	0–3	0–3
No. 200	0–2	0–2	0–2	0–2

03-21-14

The cleanness value determined under California Test 227 must be 80 or greater.

07-19-13

37-2.04B(3) Construction

Asphaltic emulsion must be applied within the application rate ranges shown in the following table:

Asphaltic Emulsion Application Rates

Screenings	Application rate range(gallons per square yard)
Fine	0.15–0.30
Medium fine	0.25–0.35
Medium	0.25–0.40
Coarse	0.30–0.40

Apply asphaltic emulsion when the ambient air temperature is from 65 to 110 degrees F and the pavement surface temperature is at least 80 degrees F.

Do not apply asphaltic emulsion when weather forecasts predict the ambient air temperature will fall below 39 degrees F within 24 hours after application.

For double asphaltic emulsion seal coat, the asphaltic emulsion must be applied within the application rates shown in the following table:

DocuSign Envelope ID: 894511EA-295B-49EB-A393-D26A6837FDD4

Asphaltic Emulsion Application Rates

Screenings	Application rate range (gal/sq yd)
Double	
1st application	0.20–0.35
2nd application	0.20–0.30

You may stockpile screenings for asphaltic emulsion seal coat if you prevent contamination. Screenings must have damp surfaces at spreading. If water visibly separates from the screenings, do not spread. You may redampen them in the delivery vehicle.
Spread screenings before the asphaltic emulsion sets or breaks.
Spread screenings within 10 percent of the rate determined by the Engineer. Screenings must have a spread rate within the ranges shown in the following table:

Screening Spread Rates

Seal coat type	Range (lb/sq yd)
Fine	12–20
Medium fine	16–25
Medium	20–30
Coarse	23–30

Do not spread screenings more than 2,500 feet ahead of the completed initial rolling.
For double asphaltic emulsion seal coat, screenings must have a spread rate within the ranges shown in the following table:

Screening Spread Rates

Seal coat type	Range (lb/sq yd)
Double	
1st application	23–30
2nd application	12–20

Remove excess screenings on the 1st application before the 2nd application of asphaltic emulsion.

37-2.04B(4) Payment

If asphaltic emulsion seal coat with screenings does not comply with the cleanness value specifications, you may request that the seal coat remain in place with a pay deduction corresponding to the cleanness value shown in the following table:

Asphaltic Emulsion Seal Coat Cleanness Value Deductions

Cleanness value	Deduction
80 or over	None
79	$2.00 /ton
77–78	$4.00 /ton
75–76	$6.00 /ton

37-2.04C Polymer Asphaltic Emulsion Seal Coat

37-2.04C(1) General

37-2.04C(1)(a) Summary

Section 37-2.04C includes specifications for applying a polymer asphaltic emulsion seal coat.

37-2.04C(1)(b) Definitions

Reserved

37-2.04C(1)(c) Submittals

DocuSign Envelope ID: 894511EA-295B-49EB-A393-D26A6837FDD4

At least 10 days before starting polymer asphaltic emulsion seal coat application, submit a signed copy of the test result report of the Vialit test method for aggregate retention in chip seals (french chip) to the Engineer and to:

DEPARTMENT OF TRANSPORTATION
Division of Maintenance, Roadway Maintenance Office
1120 N Street, MS 31
Sacramento, CA 95814

37-2.04C(1)(d) Quality Control and Assurance

The authorized laboratory must test screenings for retention under the Vialit test method for aggregate in chip seals (french chip). The Vialit test results are not used for acceptance. The Vialit test is available at the METS Web site.

If the test results for polymer asphaltic emulsion do not comply with the specifications, the Engineer assesses a pay factor value for the following properties and increments:

03-21-14

Polymer Asphaltic Emulsion Pay Factor Table

Test method and property	Increment	Pay factor
Test on polymer asphaltic emulsion		
AASHTO T 59 (Viscosity, sec Saybolt Furol, at 50 °C)	Each 10 seconds above max or below min	1
AASHTO T 59 (settlement, 5 days, percent)	Each 1.5 percent above max	1
AASHTO T 59 (sieve test, percent max)	Each 0.2 percent above max	1
AASHTO T 59 (demulsibility percent)	Each 2 percent below min	1
Test on residue from evaporation test		
AASHTO T 49 (penetration, 25 °C)	Each 2 dm above max or below min	1
ASTM D 36 (field softening point °C)	2 °C below min	1
California Test 332 (torsional recovery [a])	For each 1 increment below the min value of 18	1
	For each 2 increments below the min value of 18	3
	For each 3 or more increments below the min value of 18	10
ASTM T 301 (elastic recovery [a])	For each 1 increment below the min value of 60	1
	For each 2 increment below the min value of 60	3
	For each 3 increment below the min value of 60	10

[a] The highest pay factor applies

07-19-13

The Engineer assesses a pay factor of 1 for sampling not performed in compliance with the specifications, including shipping and sampling containers.

For polymer asphaltic emulsion seal coat, if a test result for the screenings cleanness value is from 75 to 86, you may request that the asphaltic emulsion seal coat represented by the test remain in place. A payment deduction is made as specified in section 37-2.04D. If the screenings cleanness value is less than 75, remove the asphaltic emulsion seal coat.

DocuSign Envelope ID: 894511EA-295B-49EB-A393-D26A6837FDD4

37-2.04C(2) Materials

Polymer asphaltic emulsion must include elastomeric polymer.

03-21-14

Polymer asphaltic emulsion must comply with section 94, Table 3, under the test on residue from evaporation test for Grades PMRS2, PMRS2h, PMCRS2, and PMCRS2h and the following:

1. The penetration at 39.2 degrees F (200g for 60 seconds) determined under AASHTO T 49 must be at least 6.
2. Elastic recovery determined under AASHTO T 301 must be at least 60 percent.
3. Polymer content in percent by weight does not apply.
4. The ring and ball softening point temperature determined under AASHTO T 53 for Test on Residue from Evaporation Test must comply with the following minimum temperature requirement:
   - 4.1. 126 degrees F for a geographical ambient temperature from 32 to 104 degrees F
   - 4.2. 129 degrees F for a geographical ambient temperature from 18 to 104 degrees F
   - 4.3. 135 degrees F for a geographical ambient temperature from 18 to greater than 104 degrees F

07-19-13

Screenings for polymer asphaltic emulsion seal coat must have the gradation as determined under California Test 202 in the following table:

Polymer Asphaltic Emulsion Seal Coat Screenings Gradation

	Percentage passing			
Sieve sizes	Coarse 1/2" max	Medium 3/8" max	Medium fine 5/16" max	Fine 1/4" max
3/4"	100	--	--	--
1/2"	85–100	100	--	--
3/8"	0–30	85–100	100	100
No. 4	0–5	0–15	0–50	60–85
No. 8	--	0–5	0–15	0–25
No. 16	--	--	0–5	0–5
No. 30	--	--	0–3	0–3
No. 200	0–2	0–2	0–2	0–2

03-21-14

The cleanness value determined under California Test 227 must be 86 or greater.

07-19-13

37-2.04C(3) Construction

Polymer asphaltic emulsion must be applied within the application rate ranges shown in the following table:

Polymer Asphaltic Emulsion Application Rates

Screenings	Application rate range(gallons per square yard)
Fine	0.15–0.30
Medium fine	0.25–0.35
Medium	0.25–0.40
Coarse	0.30–0.40

Apply polymer asphaltic emulsion when the ambient air temperature is from 60 to 105 degrees F and the pavement surface temperature is at least 55 degrees F.

Do not apply polymer asphaltic emulsion when weather forecasts predict the ambient air temperature will fall below 39 degrees F within 24 hours after application.

For double asphaltic emulsion seal coat, polymer asphaltic emulsion must be applied within the application rates shown in the following table:

DocuSign Envelope ID: 894511EA-295B-49EB-A393-D26A6837FDD4

Polymer Asphaltic Emulsion Application Rates

Screenings	Application rate range (gal/sq yd)
Double	
1st application	0.20–0.35
2nd application	0.20–0.30

You may stockpile screenings for polymer emulsion seal coat if you prevent contamination. Screenings must have damp surfaces at spreading. If water visibly separates from the screenings, do not spread. You may redampen them in the delivery vehicle.
Spread screenings before the polymer emulsion sets or breaks.
Spread screenings within 10 percent of the rate determined by the Engineer. Screenings must have a spread rate within the ranges shown in the following table:

Screening Spread Rates

Seal coat type	Range (lb/sq yd)
Fine	12–20
Medium fine	16–25
Medium	20–30
Coarse	23–30

Do not spread screenings more than 2,500 feet ahead of the completed initial rolling.
For double seal coat, screenings must have a spread rate within the ranges shown in the following table:

Screening Spread Rates

Seal coat type	Range (lb/sq yd)
Double	
1st application	23–30
2nd application	12–20

Remove excess screenings on the 1st application before the 2nd application of asphaltic emulsion.

37-2.04C(4) Payment

If polymer asphaltic emulsion seal coat with screenings does not comply with the specifications for cleanness value you may request that the seal coat remain in place with a pay deduction corresponding by the cleanness value shown in the following table:

Polymer Asphaltic Emulsion Seal Coat Cleanness Value Deductions

Cleanness value	Deduction
86 or over	None
81–85	$2.20/ton
77–80	$4.40/ton
75–76	$6.60/ton

If test results for polymer asphaltic emulsion aggregate grading and cleanness value test results do not comply with the specifications, all deductions are made. A test for polymer asphaltic emulsion represents the smaller of 55 tons or 1 day's production. A test for the screenings grading or cleanness value represents the smaller of 300 tons or 1 day's production.
The payment deduction for noncompliant polymer asphaltic emulsion is based on the total pay factor value determined from the table titled, "Polymer Asphaltic Emulsion Pay Factor Deduction." You must remove polymer asphaltic emulsion seal coat with a pay factor value greater than 20. You may request seal coat with noncompliant polymer asphaltic emulsion to remain in place with a pay deduction for the total pay factor value shown in the following table:

DocuSign Envelope ID: 894511EA-295B-49EB-A393-D26A6837FDD4

Polymer Asphaltic Emulsion Pay Factor Deductions

Total pay factor value	Deduction
0	none
1–2	$5.00/ton
3–5	$10.00/ton
6–9	$15.00/ton
10–14	$25.00/ton
15–20	$50.00/ton

37-2.05 ASPHALT BINDER SEAL COATS

37-2.05A General

Reserved

37-2.05B Asphalt Rubber Binder Seal Coats

37-2.05B(1) General

37-2.05B(1)(a) Summary

Section 37-2.05B includes specifications for applying asphalt rubber binder seal coat. Asphalt rubber seal coat includes applying heated asphalt rubber binder, followed by heated screenings precoated with asphalt binder, followed by a flush coat.

37-2.05B(1)(b) Definitions

crumb rubber modifier: Ground or granulated high natural crumb rubber or scrap tire crumb rubber.

descending viscosity reading: Subsequent viscosity reading at least 5 percent lower than the previous viscosity reading.

high natural crumb rubber: Material containing 40 to 48 percent natural rubber.

scrap tire crumb rubber: Any combination of:

1. Automobile tires
2. Truck tires
3. Tire buffing

37-2.05B(1)(c) Submittals

For each delivery of asphalt rubber binder ingredients and asphalt rubber binder to the job site, submit a certificate of compliance and a copy of the specified test results.
Submit MSDS for each asphalt rubber binder ingredient and the asphalt rubber binder.
At least 15 days before use, submit:

1. Four 1-quart cans of mixed asphalt rubber binder
2. Samples of each asphalt rubber binder ingredient
3. Asphalt rubber binder formulation and data as follows:
   - 3.1. For asphalt binder and asphalt modifier submit:
     - 3.1.1. Source and grade of asphalt binder
     - 3.1.2. Source and type of asphalt modifier
     - 3.1.3. Percentage of asphalt modifier by weight of asphalt binder
     - 3.1.4. Percentage of combined asphalt binder and asphalt modifier by weight of asphalt rubber binder
     - 3.1.5. Test results for the specified quality characteristics
   - 3.2. For crumb rubber modifier submit:
     - 3.2.1. Each source and type of scrap tire crumb rubber and high natural rubber

DocuSign Envelope ID: 894511EA-295B-49EB-A393-D26A6837FDD4

3.2.2. Percentage of scrap tire crumb rubber and high natural rubber by total weight of asphalt rubber binder
3.2.3. Test results for the specified quality characteristics
3.3. For asphalt rubber binder submit:
3.3.1. Test results for the specified quality characteristics
3.3.2. Minimum reaction time and temperature

At least 5 business days before use, submit the permit issued by the local air quality agency for asphalt rubber binder:
1. Field blending equipment
2. Application equipment

If an air quality permit is not required by the local air quality agency for producing asphalt rubber binder or spray applying asphalt rubber binder, submit verification from the local air quality agency that an air quality permit is not required for this Contract.
Submit a certified volume or weight slip for each delivery of asphalt rubber binder ingredients and asphalt rubber binder.
Submit a certificate of compliance and accuracy verification of test results for viscometers.
When determined by the Engineer, submit notification 15 minutes before each viscosity test or submit a schedule of testing times.
Submit the log of asphalt rubber binder viscosity test results each day of asphalt rubber seal coat work.

37-2.05B(1)(d) Quality Control and Assurance

Equipment used in producing asphalt rubber binder must be permitted for use by the local air quality agency. Equipment used in spreading asphalt rubber binder must be permitted for use by the local air quality agency.
Each asphalt rubber binder ingredient must be sampled and tested for compliance with the specifications by the manufacturer.
Test and submit results at least once per project or the following, whichever frequency is greater:
1. For crumb rubber modifier except for grading, at least once per 250 tons. Samples of scrap tire crumb rubber and high natural crumb rubber must be sampled and tested separately. Test each delivery of crumb rubber modifier for grading.
2. For asphalt binder, test and submit at least once per 200 tons of asphalt binder production.
3. For asphalt modifier, test and submit at least once per 25 tons of asphalt modifier production.

Scrap tire crumb rubber and high natural crumb rubber must be delivered to the asphalt rubber production site in separate bags.
Take viscosity readings of asphalt rubber binder under ASTM D7741 during asphalt rubber binder production. Start taking viscosity readings of samples taken from the reaction vessel at least 45 minutes after adding crumb rubber modifier and continue taking viscosity readings every 30 minutes until 2 consecutive descending viscosity readings have been obtained and the final viscosity meets the specification requirement. After meeting the 2 descending viscosity readings requirement, continue to take viscosity readings hourly and within 15 minutes before use. Log the test results, including time of testing and temperature of the asphalt rubber binder.

37-2.05B(2) Material

37-2.05B(2)(a) General

Reserved

37-2.05B(2)(b) Asphalt Binder

DocuSign Envelope ID: 894511EA-295B-49EB-A393-D26A6837FDD4

Asphalt binder must comply with the specifications for asphalt binder. Do not modify asphalt binder with polymer.

37-2.05B(2)(c) Asphalt Modifier

Asphalt modifier must be a resinous, high flash point, and aromatic hydrocarbon. Asphalt modifier must have the values for the quality characteristics shown in the following table:

Asphalt Modifier for Asphalt Rubber Binder

Quality characteristic	Test method	Value
Viscosity, m^2/s (x 10^{-6}) at 100 °C	ASTM D 445	X ± 3 [a]
Flash point, CL.O.C., °C	ASTM D 92	207 min
Molecular analysis		
Asphaltenes, percent by mass	ASTM D 2007	0.1 max
Aromatics, percent by mass	ASTM D 2007	55 min

[a] "X" denotes the proposed asphalt modifier viscosity from 19 to 36. A change in "X" requires a new asphalt rubber binder submittal.

37-2.05B(2)(d) Crumb Rubber Modifier

Crumb rubber modifier must be ground or granulated at ambient temperature.

Scrap tire crumb rubber and high natural crumb rubber must be delivered to the asphalt rubber binder production site in separate bags.

Steel and fiber must be separated. If steel and fiber are cryogenically separated, it must occur before grinding and granulating. Cryogenically-produced crumb rubber modifier particles must be large enough to be ground or granulated.

Wire must not be more than 0.01 percent by weight of crumb rubber modifier. Crumb rubber modifier must be free of contaminants except fabric, which must not exceed 0.05 percent by weight of crumb rubber modifier. Method for determining the percent weight of wire and fabric is available under Laboratory Procedure 10 at the following METS Web site:
http://www.dot.ca.gov/hq/esc/Translab/ofpm/fpmlab.htm

The length of an individual crumb rubber modifier particle must not exceed 3/16 inch.

Crumb rubber modifier must be dry, free-flowing particles that do not stick together. A maximum of 3 percent calcium carbonate or talc by weight of crumb rubber modifier may be added. Crumb rubber modifier must not cause foaming when combined with the asphalt binder and asphalt modifier.

Specific gravity of crumb rubber modifier must be from 1.1 to 1.2 determined under California Test 208.

When tested under ASTM D 297, crumb rubber modifier must comply with the requirements shown in the following table:

Crumb Rubber Modifier

Quality characteristic	Scrap tire crumb rubber (percent)		High natural rubber (percent)	
	Min	Max	Min	Max

DocuSign Envelope ID: 894511EA-295B-49EB-A393-D26A6837FDD4

Acetone extract	6.0	16.0	4.0	16.0
Rubber hydrocarbon	42.0	65.0	50.0	--
Natural rubber content	22.0	39.0	40.0	48.0
Carbon black content	28.0	38.0	--	--
Ash content	--	8.0	--	--

Scrap tire crumb rubber must have the gradation shown in the following table:

Scrap Tire Crumb Rubber Gradation

Percentage passing

Sieve size	Gradation limit	Operating range	Contract compliance
No. 8	100	100	100
No. 10	98–100	95–100	90–100
No. 16	45–75	35–85	32–88
No. 30	2–20	2–25	1–30
No. 50	0–6	0–10	0–15
No. 100	0–2	0–5	0–10
No. 200	0	0–2	0–5

High natural crumb rubber must have the gradation shown in the following table:

High Natural Crumb Rubber Gradation

Percentage passing

Sieve size	Gradation limit	Operating range	Contract compliance
No. 10	100	100	100
No. 16	95–100	92–100	85–100
No. 30	35–85	25–95	20–98
No. 50	10–30	6–35	2–40
No. 100	0–4	0–7	0–10
No. 200	0–1	0–3	0–5

Test the crumb rubber modifier gradation under ASTM C 136 except

1. Split or quarter 100 ± 5 g from the crumb rubber modifier sample and dry to a constant mass at a temperature from 57 to 63 degrees C and record the dry sample mass. Place the crumb rubber modifier sample and 5 g of talc in a 1/2-liter jar. Seal the jar, then shake the jar by hand for at least 1 minute to mix the crumb rubber modifier and the talc. Continue shaking or open the jar and stir until the particle agglomerates and clumps are broken and the talc is uniformly mixed.
2. Place 1 rubber ball on each sieve. Each ball must weigh 8.5 ± 0.5 g, measure 24.5 ± 0.5 mm in diameter, and have a Shore Durometer "A" hardness of 50 ± 5 determined under ASTM D 2240. After sieving the combined material for 10 ± 1 minutes, disassemble the sieves. Brush material adhering to the bottom of a sieve into the next finer sieve. Weigh and record the mass of the material retained on the 2.36-milimeter sieve and leave this material (do not discard) on the scale or balance. Fabric balls must remain on the scale or balance and be placed together on the side to prevent them from being covered or disturbed when the material from finer sieves is placed onto the scale or balance. The material retained on the 2.00-milimeter sieve must be added to the scale or balance. Weigh and record that mass as the accumulative mass retained on the 2.00-milimeter sieve. Continue weighing and recording the accumulated masses retained on the remaining sieves until the accumulated mass retained in the pan has been determined. Before discarding the crumb rubber modifier sample, separately weigh and record the total mass of fabric balls in the sample.
3. Determine the mass of material passing the 75-micrometer sieve by subtracting the accumulated mass retained on the 75-micrometer sieve from the accumulated mass retained in the pan. If the material passing the 75-micrometer sieve has a mass of 5 g or less, cross out the recorded number for the accumulated mass retained in the pan and copy the number recorded for the accumulated mass retained on the 75-micrometer sieve and record that number, next to the crossed out number,

DocuSign Envelope ID: 894511EA-295B-49EB-A393-D26A6837FDD4

as the accumulated mass retained in the pan. If the material passing the 75-micrometer sieve has a mass greater than 5 g, cross out the recorded number for the accumulated mass retained in the pan, subtract 5 g from that number and record the difference next to the crossed out number. The adjustment to the accumulated mass retained in the pan accounts for the 5 g of talc added to the sample. For calculation purposes, the adjusted total sample mass is the same as the adjusted accumulated mass retained in the pan. Determine the percent passing based on the adjusted total sample mass and record to the nearest 0.1 percent.

37-2.05B(2)(e) Asphalt Rubber Binder

Asphalt rubber binder must be a combination of:

1. Asphalt binder
2. Asphalt modifier
3. Crumb rubber modifier

Asphalt rubber binder blending equipment must be authorized under the Department's material plant quality program.

The blending equipment must allow the determination of weight percentages of each asphalt rubber binder ingredient.

Asphalt rubber binder must be 79 ± 1 percent by weight asphalt binder and 21 ± 1 percent by weight of crumb rubber modifier. The minimum percentage of crumb rubber modifier must be 20.0 percent and lower values may not be rounded up.

Crumb rubber modifier must be 76 ± 2 percent by weight scrap tire crumb rubber and 24 ± 2 percent by weight high natural rubber.

Asphalt modifier and asphalt binder must be blended at the production site. Asphalt modifier must be from 2.5 to 6.0 percent by weight of the asphalt binder in the asphalt rubber binder. The asphalt rubber binder supplier determines the exact percentage.

If blended, the asphalt binder must be from 375 to 440 degrees F when asphalt modifier is added and the mixture must circulate for at least 20 minutes. Asphalt binder, asphalt modifier, and crumb rubber modifier may be proportioned and combined simultaneously.

The blend of asphalt binder and asphalt modifier must be combined with crumb rubber modifier at the asphalt rubber binder production site. The asphalt binder and asphalt modifier blend must be from 375 to 440 degrees F when crumb rubber modifier is added. Combined ingredients must be allowed to react at least 45 minutes at temperatures from 375 to 425 degrees F except the temperature must be at least 10 degrees F below the flash point of the asphalt rubber binder.

After reacting, the asphalt rubber binder must have the values for the quality characteristics shown in the following table:

Asphalt Rubber Binder

Quality characteristic	Test method	Requirement	
		Min	Max
Cone penetration @ 25 °C, 1/10 mm	ASTM D 217	25	60
Resilience @ 25 °C, percent rebound	ASTM D 5329	18	50
Field softening point, °C	ASTM D 36	55	88
Viscosity @190 °C, Pa • s ($x10^{-3}$)	ASTM D 7741	1500	2500

Maintain asphalt rubber binder at a temperature from 375 to 415 degrees F.

Stop heating unused asphalt rubber binder 4 hours after the 45-minute reaction period. Reheating asphalt rubber binder that cools below 375 degrees F is a reheat cycle. Do not exceed 2 reheat cycles. If reheating, asphalt rubber binder must be from 375 to 415 degrees F before use.

During reheating, you may add scrap tire crumb rubber. Scrap tire crumb rubber must not exceed 10 percent by weight of the asphalt rubber binder. Allow added scrap tire crumb rubber to react

DocuSign Envelope ID: 894511EA-295B-49EB-A393-D26A6837FDD4

for at least 45 minutes. Reheated asphalt rubber binder must comply with the specifications for asphalt rubber binder.

37-2.05B(2)(f) Screenings

Before precoating with asphalt binder and when tested under California Test 202, screenings for asphalt rubber seal coat must have the gradation shown in the following table:

Asphalt Rubber Seal Coat Screenings Gradation

Sieve sizes	Percentage passing by weight		
	Coarse 1/2" max	Medium 1/2" max	Fine 3/8" max
3/4"	100	100	100
1/2"	75–90	85–90	95–100
3/8"	0–20	0–30	70–85
No. 4	0–2	0–5	0–15
No. 8	--	--	0–5
No. 200	0–1	0–1	0–1

Screenings must have the values for the properties shown in the following table:

Seal Coat Screenings

Properties	Test method	Value
Cleanness value, min	California Test 227	80
Durability, min	California Test 229	52

37-2.05B(3) Construction

37-2.05B(3)(a) General

Reserved

37-2.05B(3)(b) Equipment

Self-propelled distributor truck for applying asphalt rubber binder must have the following features:

1. Heating unit
2. Internal mixing unit
3. Pumps that spray asphalt rubber binder within 0.05 gal/sq yd of the specified rate
4. Fully circulating spray bar that applies asphalt rubber binder uniformly
5. Tachometer
6. Pressure gages
7. Volume measuring devices
8. Thermometer
9. Observation platform on the rear of the truck for an observer on the platform to see the nozzles and unplug them if needed

37-2.05B(3)(c) Precoating Screenings

For asphalt rubber seal coat, do not recombine fine materials collected in dust control systems except cyclone collectors or knock-out boxes with any other aggregate used in the production of screenings.

For asphalt rubber seal coat, screenings must be preheated from 260 to 325 degrees F. Coat with any of the asphalts specified in the table titled "Performance Graded Asphalt Binder" in section 92. Coat at a central mixing plant. The asphalt must be from 0.5 to 1.0 percent by weight of dry screenings. The Engineer determines the exact rate.

Plant must be authorized under the Department's material plant quality program.

Do not stockpile preheated or precoated screenings.

DocuSign Envelope ID: 894511EA-295B-49EB-A393-D26A6837FDD4

37-2.05B(3)(d) Asphalt Rubber Binder Application

Apply asphalt rubber binder immediately after the reaction period. At the time of application, the temperature of asphalt rubber binder must be from 385 to 415 degrees F.
Apply asphalt rubber binder at a rate from 0.55 to 0.65 gal/sq yd. The Engineer determines the exact rate.
Apply asphalt rubber binder when the atmospheric temperature is from 60 to 105 degrees F and the pavement surface temperature is at least 55 degrees F.
Do not apply asphalt rubber binder unless there are sufficient screenings available to cover the asphalt rubber binder within 2 minutes. Intersections, turn lanes, gore points, and irregular areas must be covered within 15 minutes.
Do not apply asphalt rubber binder when weather or road conditions are unsuitable, including high wind or when the pavement is damp. In windy conditions you may adjust the distributor bar height and distribution speed, and use shielding equipment, if the Engineer authorizes your request.

37-2.05B(3)(e) Screenings Application

During transit, cover precoated screenings for asphalt rubber seal coat with tarpaulins if the ambient air temperature is below 65 degrees F or the haul time exceeds 30 minutes.
At the time of application, screenings for asphalt rubber seal coat must be from 225 to 325 degrees F.
Spread screenings at a rate from 28 to 40 lb/sq yd. The exact rate is determined by the Engineer. Spread to within 10 percent of the determined rate.

37-2.05B(3)(f) Rolling and Sweeping

Perform initial rolling within 90 seconds of spreading screenings. Do not spread screenings more than 200 feet ahead of the initial rolling.
For final rolling, you may request use of a steel-wheeled roller weighing from 8 to 10 tons, static mode only.
Perform a final sweeping before Contract acceptance. The final sweeping must not dislodge screenings.
Dispose of swept screenings at least 150 feet from any waterway.

37-2.05B(4) Payment

Screenings for asphalt rubber seal coat are measured by coated weight after they are preheated and precoated with asphalt binder. The weight of screenings must be the coated weight.
If recorded batch weights are printed automatically, the bid item for screenings for asphalt-rubber seal coat are measured using the printed batch weights, provided:

1. Total aggregate weight for screenings per batch is printed
2. Total asphalt binder weight per batch is printed
3. Each truckload's zero tolerance weight is printed before weighing the first batch and after weighing the last batch
4. Time, date, mix number, load number and truck identification are correlated with a load slip
5. A copy of the recorded batch weights is certified by a licensed weighmaster and submitted to the Engineer

Screenings for asphalt rubber seal coat is paid for as precoated screenings.
Asphalt-rubber binder is measured under the specifications for asphalts.
If test results for gradation tests do not comply with the specifications, deductions are taken.
Each gradation test for scrap tire crumb rubber represents 10,000 lbs or the amount used in that day's production, whichever is less.
Each gradation test for high natural rubber represents 3,400 lbs or the amount used in that day's production, whichever is less.

DocuSign Envelope ID: 894511EA-295B-49EB-A393-D26A6837FDD4

For each gradation test, the following pay deductions will be taken from the asphalt rubber bid item:

Gradation Test

Material	Test result [a]	Deduction
Scrap tire crumb rubber	Operating range < TR < Contract compliance	$250
Scrap tire crumb rubber	TR > Contract compliance	$1,100
High natural crumb rubber	Operating range < TR < Contract compliance	$250
High natural crumb rubber	TR > Contract compliance	$600

[a] Test Result = TR

37-2.05C Modified Asphalt Binder Seal Coat

Reserved

03-21-14

37-2.06 STRESS ABSORBING MEMBRANE INTERLAYER

37-2.06A General

Section 37-2.06 applies where a stress absorbing membrane interlayer (SAMI) is shown.
Comply with section 37-2.05B except a flush coat is not required.

37-2.06B Materials

For SAMI, screenings must comply with the 3/8-inch maximum gradation.

37-2.06C Construction

For SAMI, section 37-2.01C(7) does not apply.
Final rolling and sweeping are not required for SAMI.

37-2.06D Payment

Not Used

37-2.07–37-2.10 RESERVED

Add to section 37-3.01D(1):

01-18-13

Micro-surfacing spreader operators must attend the prepaving conference.

^^

39 HOT MIX ASPHALT

10-17-14

Replace the headings and paragraphs in section 39 with:

04-18-14

39-1 GENERAL

39-1.01 GENERAL

39-1.01A Summary

Section 39-1 includes general specifications for producing and placing hot mix asphalt.
HMA includes one or more of the following types:

1. Type A HMA
2. RHMA-G
3. OGFC

DocuSign Envelope ID: 894511EA-295B-49EB-A393-D26A6837FDD4

4. BWC
5. Minor HMA

If a warm mix asphalt technology is specified, the warm mix asphalt technology to be used must be authorized. For Department-authorized warm mix asphalt technologies, go to the METS website.

39-1.01B Definitions

binder replacement: Binder from RAP expressed as a percent of the total binder in the mix.

coarse aggregate: Aggregate retained on a no. 4 sieve.

fine aggregate: Aggregate passing the no. 4 sieve.

leveling course: Thin layer of HMA used to correct minor variations in the longitudinal and transverse profile of the pavement before placement of other pavement layers.

lower course: Layer of HMA below 0.2 feet from finished grade exclusive of OGFC.

miscellaneous areas: Areas outside the traveled way such as:

1. Median areas not including inside shoulders
2. Island areas
3. Sidewalks
4. Gutters
5. Ditches
6. Overside drains
7. Aprons at ends of drainage structures

processed RAP: RAP that has been fractionated.

supplemental fine aggregate: Aggregate passing the no. 30 sieve, including hydrated lime, portland cement, and fines from dust collectors.

surface course: Upper 0.2 feet of HMA exclusive of OGFC.

top layer: Final riding surface.

39-1.01C Submittals

39-1.01C(1) General

Reserved

39-1.01C(2) Job Mix Formula

39-1.01C(2)(a) General

Except for the HMA to be used in miscellaneous areas and dikes, submit your proposed JMF for each type of HMA to be used. The JMF must be submitted on the Contractor Job Mix Formula Proposal form along with:

1. Mix design documentation on Contractor Hot Mix Asphalt Design Data form dated within 12 months of submittal
2. JMF verification on a Caltrans Hot Mix Asphalt Verification form, if applicable
3. JMF renewal on a Caltrans Job Mix Formula Renewal form, if applicable
4. MSDS for:
   - 4.1. Asphalt binder
   - 4.2. Supplemental fine aggregate except fines from dust collectors
   - 4.3. Antistrip additives

The Contractor Hot Mix Asphalt Design Data form must show documentation on aggregate quality.

DocuSign Envelope ID: 894511EA-295B-49EB-A393-D26A6837FDD4

If you cannot submit a Department-verified JMF on a Caltrans Hot Mix Asphalt Verification form dated within 12 months before HMA production, the Engineer verifies the JMF.
Submit a new JMF if you change any of the following:

1. Target asphalt binder percentage greater than ±0.2 percent
2. Asphalt binder supplier
3. Combined aggregate gradation
4. Aggregate sources
5. Liquid antistrip producer or dosage
6. Average binder content in a new fractionated RAP stockpile by more than ±2.0 percent from the average RAP binder content reported on page 4 of your Contractor Hot Mix Asphalt Design Data form
7. Average maximum specific gravity in a new fractionated RAP stockpile by more than ±0.060 from the average maximum specific gravity value reported on page 4 of your Contractor Hot Mix Asphalt Design Data form
8. Any material in the JMF

Allow the Engineer 5 business days from a complete JMF submittal for document review of the aggregate qualities, mix design, and JMF. The Engineer notifies you if the proposed JMF submittal is accepted.
If your JMF fails verification testing, submit an adjusted JMF based on your testing. An adjusted JMF requires a new Contractor Job Mix Formula Proposal form and Contractor Hot Mix Asphalt Design Data form and verification of a plant-produced sample.
You may submit an adjusted aggregate gradation TV on a Contractor Job Mix Formula Proposal form before verification testing. Aggregate gradation TV must be within the TV limits specified.

39-1.01C(2)(b) Job Mix Formula Renewal

You may request a JMF renewal by submitting:

1. Proposed JMF on a Contractor Job Mix Formula Proposal form
2. Previously verified JMF documented on a Caltrans Hot Mix Asphalt Verification form dated within 12 months
3. Mix design documentation on a Contractor Hot Mix Asphalt Design Data form used for the previously verified JMF

39-1.01C(2)(c) Job Mix Formula Modification

For an authorized JMF, submit a modified JMF if you change any of the following:

1. Asphalt binder supplier
2. Liquid antistrip producer
3. Liquid antistrip dosage

You may change any of the above items only once during the Contract.
Submit your modified JMF request a minimum of 15 days before production. Each modified JMF submittal must consist of:

1. Proposed modified JMF on Contractor Job Mix Formula Proposal form, marked *Modified*.
2. Mix design records on Contractor Hot Mix Asphalt Design Data form for the authorized JMF to be modified.
3. JMF verification on Hot Mix Asphalt Verification form for the authorized JMF to be modified.
4. Test results for the modified JMF in compliance with the mix design specifications. Perform tests at the mix design OBC as shown on the Contractor Asphalt Mix Design Data form.

With an accepted modified JMF submittal, the Engineer verifies each modified JMF within 10 days of receiving all verification samples.

39-1.01C(3) Quality Control Plan

With your proposed JMF submittal, submit a QC plan for HMA.
The QC plan must describe the organization and procedures for:

DocuSign Envelope ID: 894511EA-295B-49EB-A393-D26A6837FDD4

1. Controlling HMA quality characteristics
2. Taking samples, including sampling locations
3. Establishing, implementing, and maintaining QC
4. Determining when corrective actions are needed
5. Implementing corrective actions
6. Methods and materials for backfilling core locations

The QC plan must address the elements affecting HMA quality including:
1. Aggregate
2. Asphalt binder
3. Additives
4. Production
5. Paving

The QC plan must include aggregate QC sampling and testing during lime treatment.
The Engineer reviews the QC plan within 5 business days from the submittal. Do not start HMA production until the Engineer authorizes the plan.
If QC procedures, personnel, tester qualifications, sample testing locations, or lab accreditation status change, submit a QC plan supplement at least 3 business days before implementing the proposed change. Do not implement the change without authorization.

39-1.01C(4) Test Results

For mix design, JMF verification, production start-up, and each 10,000 tons, submit AASHTO T 283 and AASHTO T 324 (Modified) test results to the Engineer and electronically to:
Moisture_Tests@dot.ca.gov

Submit all QC test results, except AASHTO T 283 and AASHTO T 324 (Modified), within 3 business days of a request. Submit AASHTO T 283 QC tests within 15 days of sampling.
For tests performed under AASHTO T 324 (Modified), submit test data and 1 tested sample set within 5 business days of sampling.
If coarse and fine durability index tests are required, submit test results within 2 business days of testing.
If tapered notched wedge is used, submit test result values within 24 hours of testing.

39-1.01C(5) Reserved

39-1.01C(6) Liquid Antistrip Treatment

If liquid antistrip treatment is used, submit the following with your proposed JMF submittal:
1. One 1-pint sample
2. Infrared analysis including copy of absorption spectra
3. Certified copy of test results
4. Certificate of compliance for each liquid antistrip shipment. On each certificate of compliance, include:
   - 4.1. Your signature and printed name
   - 4.2. Shipment number
   - 4.3. Material type
   - 4.4. Material specific gravity
   - 4.5. Refinery
   - 4.6. Consignee
   - 4.7. Destination
   - 4.8. Quantity
   - 4.9. Contact or purchase order number
   - 4.10. Shipment date
6. Proposed proportions for liquid antistrip

DocuSign Envelope ID: 894511EA-295B-49EB-A393-D26A6837FDD4

For each delivery of liquid antistrip to the HMA production plant, submit a 1-pint sample to METS. Submit shipping documents. Label each liquid antistrip sampling container with:

1. Liquid antistrip type
2. Application rate
3. Sample date
4. Contract number

At the end of each day's production shift, submit production data in electronic and printed media. Present data on electronic media in tab delimited format. Use line feed carriage return with 1 separate record per line for each production data set. Allow sufficient fields for the specified data. Include data titles at least once per report. For each HMA mixing plant type, submit the following information in the order specified:

1. For batch plant mixing:
   - 1.1. Production date
   - 1.2. Time of batch completion
   - 1.3. Mix size and type
   - 1.4. Each ingredient's weight
   - 1.5. Asphalt binder content as a percentage of the total weight of mix
   - 1.6. Liquid antistrip content as a percentage of the asphalt binder weight
2. For continuous mixing plant:
   - 2.1. Production date
   - 2.2. Data capture time
   - 2.3. Mix size and type
   - 2.4. Flow rate of wet aggregate collected directly from the aggregate weigh belt
   - 2.5. Aggregate moisture content as percentage of the dry aggregate weight
   - 2.6. Flow rate of asphalt binder collected from the asphalt binder meter
   - 2.7. Flow rate of liquid antistrip collected from the liquid antistrip meter
   - 2.8. Asphalt binder content as percentage of the total weight of mix calculated from:
     - 2.8.1. Aggregate weigh belt output
     - 2.8.2. Aggregate moisture input
     - 2.8.3. Asphalt binder meter output
   - 2.9. Liquid antistrip content as percentage of the asphalt binder weight calculated from:
     - 2.9.1. Asphalt binder meter output
     - 2.9.2. Liquid antistrip meter output

39-1.01C(7) Lime Treatment

If aggregate lime treatment is used, submit the following with your proposed JMF submittal and each time you produce lime-treated aggregate:

1. Exact lime proportions for fine and coarse virgin aggregate
2. If marination is required, the averaged aggregate quality test results within 24 hours of sampling
3. For dry lime aggregate treatment, a treatment data log from the dry lime and aggregate proportioning device in the following order:
   - 3.1. Treatment date
   - 3.2. Time of day the data is captured
   - 3.3 Aggregate size being treated
   - 3.4. HMA type and mix aggregate size
   - 3.5. Wet aggregate flow rate collected directly from the aggregate weigh belt
   - 3.6. Aggregate moisture content, expressed as a percent of the dry aggregate weight
   - 3.7. Flow rate of dry aggregate calculated from the flow rate of wet aggregate

DocuSign Envelope ID: 894511EA-295B-49EB-A393-D26A6837FDD4

3.8. Dry lime flow rate
3.9. Lime ratio from the authorized JMF for each aggregate size being treated
3.10. Lime ratio from the authorized JMF for the combined aggregate
3.11. Actual lime ratio calculated from the aggregate weigh belt output, the aggregate moisture input, and the dry lime meter output, expressed as a percent of the dry aggregate weight
3.12. Calculated difference between the authorized lime ratio and the actual lime ratio

4. For lime slurry aggregate treatment, a treatment data log from the slurry proportioning device in the following order:
   4.1. Treatment date
   4.2. Time of day the data is captured
   4.3. Aggregate size being treated
   4.4. Wet aggregate flow rate collected directly from the aggregate weigh belt
   4.5. Moisture content of the aggregate just before treatment, expressed as a percent of the dry aggregate weight
   4.6. Dry aggregate flow rate calculated from the wet aggregate flow rate
   4.7. Lime slurry flow rate measured by the slurry meter
   4.8. Dry lime flow rate calculated from the slurry meter output
   4.9. Authorized lime ratio for each aggregate size being treated
   4.10. Actual lime ratio calculated from the aggregate weigh belt and the slurry meter output, expressed as a percent of the dry aggregate weight
   4.11. Calculated difference between the authorized lime ratio and the actual lime ratio
   4.12. Dry lime and water proportions at the slurry treatment time

Each day during lime treatment, submit the treatment data log on electronic media in tab delimited format on a removable CD-ROM storage disk. Each continuous treatment data set must be a separate record using a line feed carriage return to present the specified data on 1 line. The reported data must include data titles at least once per report.

39-1.01C(8) Warm Mix Asphalt Technology

If a warm mix asphalt technology is used, submit the following with your proposed JMF submittal:

1. MSDS for warm mix asphalt technology

10-17-14

2. For warm mix asphalt water injection foam technology:
   2.1. Name of technology
   2.2. Proposed foaming water content
   2.3. Proposed HMA production temperature range
   2.4. Certification from binder supplier stating no antifoaming agent is used.

04-18-14

3. For warm mix asphalt additive technology:
   3.1. Name of technology
   3.2. Percent admixture by weight of binder and percent admixture by total weight of HMA as recommended by the manufacturer
   3.3. Methodology for inclusion of admixture in laboratory-produced HMA
   3.4. Proposed HMA production temperature range

Collect and hold data for the duration of the contract and submit the electronic media, daily and upon request. The snapshot of production data must include the following:

1. Date of production
2. Production location

DocuSign Envelope ID: 894511EA-295B-49EB-A393-D26A6837FDD4

3. Time of day the data is captured
4. HMA mix type being produced and target binder rate
5. HMA additive type, brand, and target rate
6. Temperature of the binder and HMA mixture
7. For a continuous mixing plant, the rate of flow of the dry aggregate calculated from the wet aggregate flow rate as determined by the conveyor scale
8. For a continuous mixing plant, the rate of flow of the asphalt meter
9. For a continuous mixing plant, the rate of flow of HMA additive meter
10. For batch plant mixing, actual batch weights of all ingredients
11. Dry aggregate to binder ratio calculated from metered ingredient output
12. Dry aggregate to HMA additive ratio calculated from metered output

At the end of each day's production shift, submit electronic and printed media from the HMA plant process controller. Present data on electronic media in comma-separated values or tab-separated values format. The captured data for the ingredients represented by production snapshot must have allowances for sufficient fields to satisfy the amount of data required by these specifications and include data titles at least once per report.

39-1.01C(9) Samples

For the samples taken for JMF verification, submit 3 parts to the Engineer and use 1 part for your testing.

At production start-up and within 1000 tons of the halfway point of production of HMA, submit samples split from your HMA production sample for AASHTO T 283 and AASHTO T 324 (Modified) tests to the Engineer.

For production samples taken, submit 3 parts to the Engineer and use 1 part for your testing.

39-1.01C(10)–39-1.01C(11) Reserved

39-1.01C(12) Data Cores

Section 39-1.01C(12) applies if a bid item for data core is shown on the Bid Item List.

Submit a summary of data cores taken and a photograph of each data core to the Engineer and to:
Coring@dot.ca.gov

For each data core, the summary must include:

1. Project identification number
2. Date cored
3. Core identification number
4. Type of materials recovered
5. Type and approximate thickness of unstabilized material not recovered
6. Total core thickness
7. Thickness of each individual material to within:
   - 7.1. For recovered material, 1/2 inch
   - 7.2. For unstabilized material, 1.0 inch
8. Location including:
   - 8.1. County
   - 8.2. Route
   - 8.3. Post mile
   - 8.4. Lane number
   - 8.5. Lane direction
   - 8.6. Station

Each data core digital photograph must include a ruler laid next to the data core. Each photograph must include:

1. Core

DocuSign Envelope ID: 894511EA-295B-49EB-A393-D26A6837FDD4

2. Project identification number
3. Core identification number
4. Date cored
5. County
6. Route
7. Post mile
8. Lane number
9. Lane direction

39-1.01C(13) Pavement Smoothness

39-1.01C(13)(a) General

Reserved

39-1.01C(13)(b) Straightedge Measurements

Within 2 business days of performing straightedge measurements, submit areas requiring smoothness correction. Identify locations of smoothness correction by:

1. Location Number
2. District-County-Route
3. Beginning station or post mile to the nearest 0.01 mile
4. For correction areas within a lane:
   - 4.1. Lane direction as NB, SB, EB, or WB
   - 4.2. Lane number from left to right in direction of travel
   - 4.3. Wheel path as "L" for left, "R" for right, or "B" for both
5. For correction areas not within a lane:
   - 5.1. Identify pavement area (i.e., shoulder, weight station, turnout)
   - 5.2. Direction and distance from centerline as "L" for left or "R" for right
6. Estimated size of correction area

39-1.01C(13)(c) Inertial Profiler Certification

At least 5 business days before the start of initial profiling or changing profiler or operator, submit:

1. Inertial profiler certification issued by the Department.
2. Operator certification for the inertial profiler issued by the Department.
3. List of manufacturer's recommended test procedures for the inertial profiler calibration and verification.

Within 2 business days after cross-correlation testing, submit ProVAL profiler certification analysis report for cross-correlation test results performed on test section to the Engineer and to the electronic mailbox address:

smoothness@dot.ca.gov

39-1.01C(13)(d) Inertial Profiler Data

10-17-18

Within 2 business days after each day of inertial profiling, submit profile information to the Engineer and to the electronic mailbox address:

smoothness@dot.ca.gov

The profile information must include:

1. Raw profile data for each lane.
2. ProVAL ride quality analysis report for the International Roughness Index of left and right wheel paths of each lane. Submit this report in pdf file format.
3. ProVAL ride quality analysis report for the Mean Roughness Index of each lane. Submit this report in pdf file format.

DocuSign Envelope ID: 894511EA-295B-49EB-A393-D26A6837FDD4

4. ProVAL smoothness assurance analysis report for the International Roughness Index of left wheel path. Submit this report in pdf file format.
5. ProVAL smoothness assurance analysis report for the International Roughness Index of right wheel path. Submit this report in pdf file format.
6. ProVAL smoothness assurance analysis report for grinding locations of left wheel path. Submit this report in pdf file format.
7. ProVAL smoothness assurance analysis report for grinding locations of right wheel path. Submit this report in pdf file format.
8. GPS data file for each lane in GPS eXchange. Submit data file in GPS eXchange file format.
9. Manufacturer's recommended inertial profiler calibration and verification test results.
10. Inertial profiler calibration and verification test results including bounce, block, and distance measurement instrument.

04-18-14

Submit the raw profile data in unfiltered electronic pavement profile file (PPF) format. Name the PPF file using the following naming convention:

YYYYMMDD_TTCCCRRR_D_L_W_B_E_X_PT.PPF

where:
YYYY = year
MM = Month, leading zero
DD = Day of month, leading zero
TT = District, leading zero
CCC = County, 2 or 3 letter abbreviation as shown in section 1-1.08
RRR = Route number, no leading zeros
D = Traffic direction as NB, SB, WB, or EB
L = Lane number from left to right in direction of travel
W = Wheel path as "L" for left, "R" for right, or "B" for both
B = Beginning station to the nearest foot (i.e., 10+20) or beginning post mile to the nearest hundredth (i.e., 25.06) no leading zero
E = Ending station to the nearest foot (i.e., 14+20) or ending post mile to the nearest hundredth (i.e., 28.06) no leading zero
X = Profile description as "EXIST" for existing pavement, "INTER" for after prepaving smoothness correction, "PAVE" for after paving, and "CORR" for after final surface pavement correction
PT = HMA pavement type

39-1.01C(13)(e) Reserved

39-1.01C(14)–39-1.01C(15) Reserved

39-1.01D Quality Control and Assurance

39-1.01D(1) General

When testing under AASHTO T 324 (Modified), test under AASHTO T 324 with the following parameters:

1. Target air voids must equal 7 ± 1 percent
2. Specimen height must be 60 ± 1 mm
3. Number of test specimens must be 4 (2 test sets)
4. Do not average test sets
5. Test specimen must be a 150 mm gyratory compacted specimen
6. Test temperature must be set at:
   6.1. 113 ± 2 degrees F for PG 58

DocuSign Envelope ID: 894511EA-295B-49EB-A393-D26A6837FDD4

6.2. 122 ± 2 degrees F for PG 64
6.3. 131 ± 2 degrees F for PG 70 and above

10-17-14

7. Measurements for impression must be taken at every 100 passes along the total length of sample
8. Inflection point defined as the number of wheel passes at the intersection of the creep slope and the stripping slope at maximum rut depth
9. Testing shut off must be set at 25,000 passes
10. Submersion time for samples must not exceed 4 hours

04-18-14

Take samples under California Test 125.
HMA samples may be heated a maximum of 2 times for up to 4 hours each.

39-1.01D(2) Job Mix Formula Verification

10-17-14

The Engineer verifies the JMF from samples taken from HMA produced by the plant to be used. The production set point at the plant must be within ±0.2 from the asphalt binder percentage target value shown in your Contractor Job Mix Formula Proposal form. Notify the Engineer at least 2 business days before sampling materials. Samples may be taken from a different project including a non-Department project if you make arrangements for the Engineer to be present during sampling.

04-18-14

In the Engineer's presence and from the same production run, take samples of:

1. Aggregate. Coarse, fine, and supplemental fine aggregate must be taken from the combined cold feed belt, or hot bins. If lime treatment is required, samples must be taken from individual stockpiles before lime treatment. Samples must be at least 120 lb for each coarse aggregate, 80 lb for each fine aggregate, and 10 lb for each type of supplemental fines. For hot bin samples, the Department combines these aggregate samples to comply with the TV submitted on a Contractor Job Mix Formula Proposal form.
2. Asphalt binder. Take 2 samples minimum. Each sample must be in a 1-quart cylindrical-shaped can with an open top and friction lid. If the asphalt binder is modified or rubberized, the asphalt binder must be sampled with the components blended in the proportions to be used.
3. RAP. RAP samples must be at least 50 lb from each fractionated stockpile used or 100 lb from the belt.
4. Plant-produced HMA. The HMA samples must be at least 250 lb.

For aggregate, RAP, and HMA, split the samples into at least 4 parts and label their containers. Three parts are for the Department's verification testing and 1 part is for your testing.
After acceptance of the JMF submittal, the Engineer verifies each proposed JMF within 20 days of receiving all verification samples.
For JMF verification, the Engineer tests the following for compliance with the specifications:

1. Aggregate quality
2. Aggregate gradation
3. Voids in mineral aggregate on laboratory-produced HMA must comply with the mix design specifications for voids in mineral aggregate
4. HMA quality characteristics for Department acceptance

To verify the HMA for air voids, voids in mineral aggregate, and dust proportion, the Engineer uses an average of 3 briquettes. The Engineer tests plant-produced material.
If the Engineer verifies the JMF, the Engineer furnishes you a Hot Mix Asphalt Verification form.
If the Engineer's test results on plant-produced samples do not show compliance with the specifications, the Engineer notifies you. Adjust your JMF based on your testing unless the Engineer authorizes reverification without adjustments. JMF adjustments may include a change in:

DocuSign Envelope ID: 894511EA-295B-49EB-A393-D26A6837FDD4

1. Asphalt binder content target value up to ±0.2 percent from the OBC value submitted on Contractor Hot Mix Asphalt Design Data form
2. Aggregate gradation target values within the target value limits specified in the aggregate gradation table

You may adjust the JMF only once due to a failed verification test.
For each HMA type and aggregate size specified, the Engineer verifies up to 2 proposed JMF submittals including a JMF adjusted after verification failure. If you submit more than 2 JMFs for each type of HMA and aggregate size, the Engineer deducts $3,000 from payments for each verification exceeding this limit. This deduction does not apply to verifications initiated by the Engineer or if a JMF expires while HMA production is stopped longer than 30 days.
A verified JMF is valid for 12 months.

39-1.01D(3) Job Mix Formula Authorization

You may start HMA production if:
1. The Engineer's review of the JMF shows compliance with the specifications
2. The Department has verified the JMF within 12 months before HMA production
3. The Engineer authorizes the verified JMF

39-1.01D(4) Job Mix Formula Renewal

For a JMF renewal and upon request, in the Engineer's presence and from the same production run, take samples of:
1. Aggregate. Coarse, fine, and supplemental fine aggregate must be taken from combined cold-feed belt, or hot bins. If lime treatment is required, samples must be taken from individual stockpiles before lime treatment. Samples must be at least 120 lb for each coarse aggregate, 80 lb for each fine aggregate, and 10 lb for each type of supplemental fines. For hot bins, the Department combines these aggregate samples to comply with the TV submitted on a Contractor Job Mix Formula Proposal form.
2. Asphalt binder. Take 2 samples minimum. Each sample must be in a 1-quart cylindrical-shaped can with an open top and friction lid. If the asphalt binder is modified or rubberized, the asphalt binder must be sampled with the components blended in the proportions to be used.
3. RAP. RAP samples must be at least 50 lb from each fractionated stockpile.
4. Plant-produced HMA. The HMA samples must be at least 250 lb.

Notify the Engineer at least 2 business days before sampling materials. For aggregate, RAP, and HMA, split samples into at least 4 parts. Submit 3 parts to the Engineer and use 1 part for your testing.
Allow the Engineer 5 business days from a complete JMF reverification submittal for document review of the aggregate qualities, mix design, and JMF.
The most recent aggregate quality test results within the past 12 months may be used for verification of JMF renewal or upon request, the Engineer may perform aggregate quality tests for verification of JMF renewal.
The Engineer verifies the JMF for renewal under section 39-1.01D(2) except:
1. The Engineer keeps the samples until you provide test results for your part on a Contractor Job Mix Formula Renewal form.
2. The Department tests samples of materials obtained from the HMA production unit after you submit test results that comply with the mix design specifications.
3. After completion of the JMF verification renewal document review, the Engineer verifies each proposed JMF within 20 days of receiving the verification renewal samples and the complete Contractor Job Mix Formula Renewal form.
4. You may not adjust the JMF due to a failed verification.
5. For each HMA type and aggregate gradation specified, the Engineer verifies at no cost to you 1 proposed JMF renewal within a 12-month period.

DocuSign Envelope ID: 894511EA-295B-49EB-A393-D26A6837FDD4

If the Engineer verifies the JMF renewal, the Engineer furnishes you a Hot Mix Asphalt Verification form. The Hot Mix Asphalt Verification form is valid for 12 months.

39-1.01D(5) Job Mix Formula Modification

The Engineer verifies the modified JMF after the modified JMF HMA is placed on the project and verification samples are taken within the first 750 tons. The Engineer tests verification samples for compliance with:

1. Hamburg wheel track mix design specifications
2. Air void content
3. Voids in mineral aggregate on plant-produced HMA mix design specifications
4. Dust proportion mix design specifications

The Engineer may test for moisture susceptibility for compliance with the mix design specifications.

If the modified JMF is verified, the Engineer revises your Hot Mix Asphalt Verification form to include the new asphalt binder source, new liquid antistrip producer, or new liquid antistrip dosage. Your revised form will have the same expiration date as the original form.

If a modified JMF is not verified, stop production and any HMA placed using the modified JMF is rejected.

The Engineer deducts $2,000 from payments for each JMF modification.

39-1.01D(6) Certifications

39-1.01D(6)(a) General

Laboratories testing aggregate and HMA qualities used to prepare the mix design and JMF must be qualified under AASHTO Materials Reference Laboratory program and the Department's Independent Assurance Program.

39-1.01D(6)(b) Hot Mix Asphalt Plants

Before production, the HMA plant must have a current qualification under the Department's Material Plant Quality Program.

39-1.01D(6)(c) Inertial Profiler Certifications

The inertial profiler equipment must display a current certification decal with expiration date.

The inertial profiler operator and device certifications must be not more than 12 months old.

The operator must be certified for each different model of inertial profiler device operated.

39-1.01D(6)(d)–39-1.01D(6)(e) Reserved

39-1.01D(7) Prepaving Meeting

Meet with the Engineer at a prepaving meeting at a mutually agreed time and place. Discuss the QC plan and the methods of performing HMA production and paving work.

The following personnel must attend the prepaving meeting:

1. Project manager
2. Superintendent
3. HMA plant manager
4. HMA paving foreman

If a warm mix asphalt technology is used, a technical representative for warm mix asphalt technology must attend the prepaving meeting.

39-1.01D(8) Quality Control

39-1.01D(8)(a) General

QC test results must comply with the specifications for Department acceptance.

DocuSign Envelope ID: 894511EA-295B-49EB-A393-D26A6837FDD4

Prepare 3 briquettes for air voids content and voids in mineral aggregate determination. Report the average of 3 tests.

Except for smoothness, if 2 consecutive QC test results or any 3 QC test results for 1 day's production do not comply with the materials specifications:

1. Stop HMA production
2. Notify the Engineer
3. Take corrective action
4. Demonstrate compliance with the specifications before resuming production and placement

For QC tests performed under AASHTO T 27, results are considered 1 QC test regardless of number of sieves out of compliance.

Do not resume production and placement until the Engineer authorizes your corrective action proposal.

39-1.01D(8)(b) Reserved

39-1.01D(8)(c) Aggregate

39-1.01D(8)(c)(i) General

Reserved

39-1.01D(8)(c)(ii) Aggregate Lime Treatments

If lime treatment is required, sample coarse and fine aggregate from individual stockpiles before lime treatment. Combine aggregate in the JMF proportions. Test the aggregate under the test methods and frequencies shown in the following table:

Aggregate Quality Control During Lime Treatment

Quality characteristic	Test method	Minimum sampling and testing frequency
Sand equivalent[a, b]	AASHTO T 176	1 per 750 tons of untreated aggregate
Percent of crushed particles	AASHTO T 335	1 per 10,000 tons or 2 per project whichever is greater
Los Angeles Rattler	AASHTO T 96	
Fine aggregate angularity	AASHTO T 304 Method A	
Flat and elongated particles	ASTM D4791	

[a]Report test results as the average of 3 tests from a single sample.
[b]Use of a sand reading indicator is required as shown in AASHTO T 176, Figure 1. Sections 4.7, 4.8, 7.1.2, and 8.4.3 do not apply.

For lime slurry aggregate treatment, determine the aggregate moisture content at least once every 2 hours of treatment. Calculate moisture content under AASHTO T 329 and report it as a percent of dry aggregate weight. Use the moisture content calculations as a set point for the proportioning process controller.

The device controlling lime and aggregate proportioning must produce a treatment data log. The log consists of a series of data sets captured at 10-minute intervals throughout daily treatment. The data must be a treatment activity register and not a summation. The material represented by a data set is the quantity produced 5 minutes before and 5 minutes after the capture time. For the duration of the Contract, collected data must be stored by the controller.

If 3 consecutive sets of recorded treatment data indicate a deviation of more than 0.2 percent above or below the lime ratio in the accepted JMF, stop treatment and take corrective action.

If a set of recorded treatment data indicates a deviation of more than 0.4 percent above or below the lime ratio in the accepted JMF, stop treatment and do not use the material represented by that set of data in HMA.

DocuSign Envelope ID: 894511EA-295B-49EB-A393-D26A6837FDD4

If 20 percent or more of the total daily treatment indicates a deviation of more than 0.2 percent above or below the lime ratio in the accepted JMF, stop treatment and do not use that day's treated aggregate in HMA.

The Engineer may order you to stop aggregate treatment activities for any of following:

1. You fail to submit treatment data log
2. You fail to submit aggregate QC data for marinated aggregate
3. You submit incomplete, untimely, or incorrectly formatted data
4. You do not take corrective actions
5. You take late or unsuccessful corrective actions
6. You do not stop treatment when proportioning tolerances are exceeded
7. You use malfunctioning or failed proportioning devices

If you stop treatment for noncompliance, notify the Engineer of any corrective actions taken and conduct a successful 20-minute test run before resuming treatment.

39-1.01D(8)(d) Liquid Antistrip Treatment

For continuous mixing or batch-plant mixing, sample asphalt binder before adding liquid antistrip. For continuous mixing, sample the combined asphalt binder and liquid antistrip after the static mixer.

39-1.01D(8)(e) Production Start-up Evaluation

You and the Engineer evaluate HMA production and placement at production start-up.

Within the first 750 tons produced on the 1st day of HMA production, in the Engineer's presence, and from the same production run, take samples of:

1. Aggregate
2. Asphalt binder
3. RAP
4. HMA

Sample aggregate from the combined cold-feed belt or hot bin. Take RAP samples from the RAP system.

For aggregate, RAP, and HMA, split the samples into at least 4 parts and label their containers. Submit 3 parts to the Engineer and keep 1 part.

You and the Engineer must test the samples and report test results, except for AASHTO T 324 (Modified) and AASHTO T 283 test results, within 5 business days of sampling. For AASHTO T 324 (Modified) and AASHTO T 283 test results, report test results within 15 days of sampling. If you proceed before receipt of the test results, the Engineer may consider the HMA placed to be represented by these test results.

Take one 4- or 6-inch diameter density core for each 250 tons or portion thereof of HMA placed. For each density core, the Engineer reports the bulk specific gravity determined under AASHTO T 275, Method A, in addition to the percent of theoretical maximum density.

39-1.01D(8)(f) Hot Mix Asphalt Density

During HMA placement determine HMA density using a nuclear gauge. On the 1st day of production, develop a correlation factor between cores and nuclear gauge under California Test 375.

Test for in-place density using cores and a nuclear gauge. Test at random locations you select and include the test results in your QC production tests reports.

39-1.01D(8)(g) Tapered Notched Wedge

Perform QC testing on the completed tapered notched wedge joint as follows:

1. Perform field compaction tests at the rate of 1 test for each 750-foot section along the joint. Select random locations for testing within each 750-foot section.

DocuSign Envelope ID: 894511EA-295B-49EB-A393-D26A6837FDD4

2. Perform field compaction tests at the centerline of the joint, 6 inches from the upper vertical notch, after the adjacent lane is placed and before opening the pavement to traffic.
3. Determine theoretical maximum density.
4. Determine percent compaction of the longitudinal joint as the ratio of the daily average of the field compaction values and the maximum density test results.

Determine percent compaction values each day the tapered notched wedge joint is completed. If the percent compaction of 1 day's production is less than 91 percent, that day's notched wedge joint is rejected. Discontinue placement of the tapered notched wedge and notify the Engineer of changes you will make to your construction process in order to comply with the specifications.

39-1.01D(8)(h) Density Cores

To determine density, take 4- or 6-inch diameter density cores at least once every 5 business days. Take 1 density core for every 250 tons of HMA from random locations the Engineer designates. Take density cores in the Engineer's presence and backfill and compact holes with authorized material. Before submitting a density core, mark it with the density core's location and place it in a protective container.

If a density core is damaged, replace it with a density core taken within 1 foot longitudinally from the original density core. Relocate any density core located within 1 foot of a rumble strip to 1 foot transversely away from the rumble strip.

For a tapered notched wedge joint, take 4- or 6-inch diameter density cores 6 inches from the upper vertical notch of the completed longitudinal joint for every 3,000 feet at locations designated by the Engineer. Take cores after the adjacent lane is placed and before opening the pavement to traffic. Cores must be taken in the presence of the Engineer and backfill and compact holes with authorized material. Before submitting a density core, mark it with the core's location and place it in a protective container.

39-1.01D(8)(i) Reserved

39-1.01D(8)(j) Pavement Smoothness

39-1.01D(8)(j)(i) General

Test pavement smoothness using an inertial profiler except use a 12-foot straightedge for the HMA pavement at the following locations:

1. Traffic lanes less than 1,000 feet in length including ramps, turn lanes, and acceleration and deceleration lanes
2. HMA pavement within 3 feet from and parallel to the construction joint formed between curbs, gutters, or existing pavement
3. Areas within 15 feet of manholes
4. Shoulders
5. Weigh-in-motion areas
6. Miscellaneous areas such as medians, gore areas, turnouts, and maintenance pullouts

Where inertial profiler testing is required, pavement smoothness for each lane must be determined by the International Roughness Index for the left and right wheel paths in an individual lane and then averaging the results. The average of the International Roughness Index values from the left and right wheel paths for the same lane is the Mean Roughness Index of the lane. The wheel paths are a pair of lines 3 feet from and parallel to the edge of a lane. Left and right wheel paths are based on the direction of travel.

Where inertial profiler testing is required, identify areas of localized roughness. Areas of localized roughness must be identified using the FHWA's engineering software ProVAL smoothness assurance analysis by calculating continuous International Roughness Index values for each wheel path with a 25-foot interval using a 250 mm filter.

DocuSign Envelope ID: 894511EA-295B-49EB-A393-D26A6837FDD4

Collect profiling data under AASHTO R 56 and analyze data using 250 mm and International Roughness Index filters.

39-1.01D(8)(j)(ii) Inertial Profiler Calibration and Verification Tests

Operate the inertial profiler according to the manufacturer's instructions and AASHTO R 57 at 1-inch recording intervals.

Notify the Engineer 2 business days before performing inertial profiler calibration and verification testing.

Conduct the following inertial profiler calibration and verification tests in the Engineer's presence each day before performing inertial profiling:

1. Block test. Verify the height sensor accuracy under California Test 387.
2. Bounce test. Verify the combined height sensor and accelerometer accuracy under California Test 387.
3. Distance measurement instrument test. Calibrate the accuracy of the testing procedure under California Test 387.
4. Manufacturer's recommended tests.

Conduct cross-correlation inertial profiler verification test in the Engineer's presence before performing initial profiling. Verify cross-correlation inertial profiler verification test at least annually. Conduct 5 repeat runs of the inertial profiler on an authorized test section. The test section must be on an existing asphalt concrete pavement surface 0.1 mile long. Calculate a cross-correlation to determine the repeatability of your device under California Test 387 using ProVAL profiler certification analysis with a 3 feet maximum offset. The cross-correlation must be a minimum of 0.92.

For each 0.1 mile section, your International Roughness Index values must be within 10 percent of the Department's International Roughness Index values. The Engineer may order you to recalibrate your inertial profiler equipment and reprofile. If your results are inaccurate due to operator error, the Engineer may disqualify your inertial profiler operator.

39-1.01D(8)(j)(iii) Smoothness Testing

Notify the Engineer of start location by station and start time at least 2 business days before profiling.

Remove foreign objects on the pavement surface before profiling.

Mark the beginning and ending station on the pavement shoulder before profiling. Stationing must be the same when profiling more than one surface.

While collecting the profile data to determine the International Roughness Index values, record the following locations in the raw profile data:

1. Begin and end of all bridge approach slabs
2. Begin and end of all bridges
3. Begin and end of all culverts visible on the roadway surface

10-17-14

4. Begin and end of all at-grade intersections

04-18-14

Determine the Mean Roughness Index for 0.1-mile fixed sections using the ProVAL ride quality analysis with a 250 mm filter. Profile the left and right wheel paths of each lane. Calculate the Mean Roughness Index of each lane. A partial section less than 0.1 mile that is the result of an interruption to continuous pavement surface must comply with the Mean Roughness Index specifications for a full section. Adjust the Mean Roughness Index for a partial section to reflect a full section based on the proportion of a section paved.

Determine the areas of localized roughness using a continuous International Roughness Index for each wheel path with a 25-foot interval using a 250 mm filter.

DocuSign Envelope ID: 894511EA-295B-49EB-A393-D26A6837FDD4

Pavement smoothness must comply with the specifications in section 39-1.01D(9)(c).

39-1.01D(9) Department Acceptance

39-1.01D(9)(a) General

The Department tests treated aggregate for acceptance before lime treatment except for gradation.
The Engineer takes HMA samples for AASHTO T 283 and AASHTO T 324 (Modified) from one of the following:

10-17-14

1. At the plant
2. At the truck
3. Windrow

The Engineer takes HMA samples for all other tests from one of the following:
1. At the plant
2. At the truck
3. Windrow
4. Mat behind the paver

04-18-14

The Engineer's sampling and testing is independent of your QC sampling and testing.
If you request, the Engineer splits samples and provides you with a part.
No single test result may represent more than 750 tons or one day's production, whichever is less, excluding AASHTO T 283 and AASHTO T 324 (Modified).
Except for smoothness, if 2 consecutive Department acceptance test results or any 3 Department acceptance test results for 1 day's production do not comply with the specifications:
1. Stop HMA production
2. Take corrective action
3. Demonstrate compliance with the specifications before resuming production and placement

10-17-14

For Department acceptance tests performed under AASHTO T 27, results are considered 1 Department acceptance test regardless of the number of sieves out of compliance.

04-18-14

The Engineer accepts HMA based on:
1. Authorized JMF
2. Authorized QC plan
3. Asphalt binder compliance
4. Asphalt emulsion compliance
5. Visual inspection
6. Pavement smoothness

39-1.01D(9)(b) In-Place Density

10-17-14

Except for HMA pavement placed using method compaction, the Engineer tests the density core you take from each 250 tons of HMA. The Engineer determines the percent of theoretical maximum density for each density core by determining the density core's density and dividing by the theoretical maximum density.

04-18-14

Density cores must be taken from the final layer, cored to the specified total paved thickness.
If the percent of theoretical maximum density does not comply with the specifications, the Engineer may accept the HMA and take a payment deduction.
For acceptance of a completed tapered notched wedge joint, the Engineer determines density from cores based on:

DocuSign Envelope ID: 894511EA-295B-49EB-A393-D26A6837FDD4

1. Field compaction by measuring the bulk specific gravity of the cores under AASHTO T 275, Method A
2. Percent compaction as the ratio of the average of the bulk specific gravity of the core for each day's production to the maximum density test value

39-1.01D(9)(c) Pavement Smoothness

For areas that require pavement smoothness determined using an inertial profiler, the pavement surface must:

1. Have no areas of localized roughness with an International Roughness Index greater than 160 in/mi
2. Comply with the Mean Roughness Index requirements shown in the following table for a 0.1 mile section:

HMA[a] Pavement Smoothness Acceptance Criteria

HMA thickness	Mean Roughness Index requirement
> 0.20 foot	60 in/mi or less
≤ 0.20 foot	75 in/mi or less

[a] Except OGFC

The final surface of HMA must comply with the Mean Roughness Index requirements before placing OGFC. Correct pavement to the Mean Roughness Index specifications. Localized roughness greater than 160 in/mi must be corrected regardless of the International Roughness Index values of a 0.1-mile section.

For areas that require pavement smoothness determined using a 12-foot straightedge, the HMA pavement surface must not vary from the lower edge of the straightedge by more than:

1. 0.01 foot when the straightedge is laid parallel with the centerline
2. 0.02 foot when the straightedge is laid perpendicular to the centerline and extends from edge to edge of a traffic lane
3. 0.02 foot when the straightedge is laid within 24 feet of a pavement conform

Pavement smoothness may be accepted based on your testing in the absence of the Department's testing.

39-1.01D(9)(d) Dispute Resolution

You and the Engineer must work together to avoid potential conflicts and to resolve disputes regarding test result discrepancies. Notify the Engineer within 5 business days of receiving a test result if you dispute the test result.

If you or the Engineer dispute each other's test results, submit QC test results and copies of paperwork including worksheets used to determine the disputed test results. An independent third party performs referee testing. Before the third party participates in a dispute resolution, it must be qualified under AASHTO Materials Reference Laboratory program, and the Department's Independent Assurance Program. The independent third party must have no prior direct involvement on this Contract. By mutual agreement, the independent third party is chosen from:

1. Department laboratory in a district or region not in the district or region the project is located
2. Transportation Laboratory
3. Laboratory not currently employed by you or your HMA producer

If split QC or acceptance samples are not available, the independent third party uses any available material representing the disputed HMA for evaluation.

If the independent third party determines the Department's test results are valid, the Engineer deducts the independent third party's testing costs from payments. If the independent third party determines your test results are valid, the Department pays the independent third party's testing costs.

DocuSign Envelope ID: 894511EA-295B-49EB-A393-D26A6837FDD4

39-1.02 MATERIALS

39-1.02A General

Reserved

39-1.02B Mix Design

39-1.02B(1) General

The HMA mix design must comply with AASHTO R 35 except:

1. Notes 3, 6, and 10 do not apply
2. AASHTO M 323 does not apply on combinations of aggregate gradation and asphalt binder contents to determine the OBC and HMA mixture qualities

The Contractor Hot Mix Asphalt Design Data form must show documentation on aggregate quality.

39-1.02B(2) Hot Mix Asphalt Treatments

If the test results for AASHTO T 283 or AASHTO T 324 (Modified) for untreated plant-produced HMA are less than the minimum requirements for HMA mix design, determine the plasticity index of the aggregate blend under California Test 204.
If the plasticity index is greater than 10, do not use that aggregate blend.
If the plasticity index is from 4 to 10, treat the aggregate with dry lime with marination or lime slurry with marination.
If the plasticity index is less than 4, treat the aggregate with dry lime or lime slurry with marination, or treat the HMA with liquid antistrip.

39-1.02B(3) Warm Mix Asphalt Technology

For HMA with warm mix asphalt additive technology, produce HMA mix samples for your mix design using your methodology for inclusion of warm mix asphalt admixture in laboratory-produced HMA. For warm mix asphalt water injection foam technology, the use of foamed asphalt for mix design is not required.

39-1.02C Asphalt Binder

Asphalt binder must comply with section 92.
For replace asphalt concrete surfacing or hot mix asphalt (leveling) the grade of asphalt binder for the HMA must be PG 64-10 or PG 64-16.

39-1.02D Aggregate

39-1.02D(1) General

Aggregate must be clean and free from deleterious substances.
The aggregate for replace asphalt concrete surfacing and hot mix asphalt (leveling) must comply with the gradation specifications for Type A HMA in section 39-2.02.

39-1.02D(2) Aggregate Gradations

10-17-14

Aggregate gradation must be determined before the addition of asphalt binder and must include supplemental fines. Test for aggregate gradation under AASHTO T 27. Do not wash the coarse aggregate. Use a mechanical sieve shaker. Aggregate shaking time must not exceed 10 minutes for each coarse and fine aggregate portion.

04-18-14

Choose a target value within the target value limits shown in the tables titled "Aggregate Gradations."
Gradations are based on nominal maximum aggregate size.

39-1.02D(3) Aggregate Lime Treatments

39-1.02D(3)(a) General

DocuSign Envelope ID: 894511EA-295B-49EB-A393-D26A6837FDD4

If aggregate lime treatment is required, virgin aggregate must comply with the aggregate quality specifications.
Lime for treating aggregate must comply with section 24-2.02B.
Water for lime treatment of aggregate with lime slurry must comply with section 24-2.02C.
Notify the Engineer at least 24 hours before the start of aggregate treatment.
Do not treat RAP.
The lime ratio is the pounds of dry lime per 100 lb of dry virgin aggregate expressed as a percentage. Water content of slurry or untreated aggregate must not affect the lime ratio.
Coarse and fine aggregate fractions must have the lime ratio ranges shown in the following table:

Aggregate fractions	Lime ratio percent
Coarse	0.4–1.0
Fine	1.5–2.0
Combined	0.8–1.5

The lime ratio for fine and coarse aggregate must be within ±0.2 percent of the lime ratio in the accepted JMF. The lime ratio must be within ±0.2 percent of the authorized lime ratio when you combine the individual aggregate sizes in the JMF proportions. The lime ratio must be determined before the addition of RAP.
If marination is required, marinate treated aggregate in stockpiles from 24 hours to 60 days before using in HMA. Do not use aggregate marinated longer than 60 days.
Treated aggregate must not have lime balls or clods.

39-1.02D(3)(b) Dry Lime

If marination is required:
1. Treat and marinate coarse and fine aggregates separately
2. Treat the aggregate and stockpile for marination only once
3. Treat the aggregate separate from HMA production

Proportion dry lime by weight with an automatic continuous proportioning system.
If you use a batch-type proportioning system for HMA production, control proportioning in compliance with the specifications for continuous mixing plants. Use a separate dry lime aggregate treatment system for HMA batch mixing including:
1. Pugmill mixer
2. Controller
3. Weigh belt for the lime
4. Weigh belt for the aggregate

If using a continuous mixing plant for HMA production without lime marinated aggregates, use a controller that measures the blended aggregate weight after any additional water is added to the mixture. The controller must determine the quantity of lime added to the aggregate from the aggregate weigh belt input in connection with the manually input total aggregate moisture, the manually input target lime content, and the lime proportioning system output. Use a continuous aggregate weigh belt and pugmill mixer for lime treatment in addition to the weigh belt for the aggregate proportioning to asphalt binder in the HMA plant. If you use a water meter for moisture control for lime treatment, the meter must comply with Department's Material Plant Quality Program manual.
At the time of mixing dry lime with aggregate, the aggregate moisture content must ensure complete lime coating. The aggregate moisture content must not cause aggregate to be lost between the point of weighing the combined aggregate continuous stream and the dryer. Add water to the

DocuSign Envelope ID: 894511EA-295B-49EB-A393-D26A6837FDD4

aggregate for mixing and coating before dry lime addition. Immediately before mixing lime with aggregate, water must not visibly separate from the aggregate.

Mix aggregate, water, and dry lime with a continuous pugmill mixer with twin shafts. Immediately before mixing lime with aggregate, water must not visibly separate from the aggregate. Store dry lime in a uniform and free-flowing condition. Introduce dry lime to the pugmill in a continuous process. The introduction must occur after the aggregate cold feed and before the point of proportioning across a weigh belt and the aggregate dryer. Prevent loss of dry lime.

The pugmill must be equipped with paddles arranged to provide sufficient mixing action and mixture movement. The pugmill must produce a homogeneous mixture of uniformly coated aggregates at mixer discharge.

If the aggregate treatment process is stopped longer than 1 hour, clean the equipment of partially treated aggregate and lime.

Aggregate must be completely treated before introduction into the mixing drum.

39-1.02D(3)(c) Lime Slurry

For lime slurry aggregate treatment, treat aggregate separate from HMA production. Stockpile and marinate the aggregate.

Proportion lime and water with a continuous or batch mixing system.

Add lime to the aggregate as slurry consisting of mixed dry lime and water at a ratio of 1 part lime to from 2 to 3 parts water by weight. The slurry must completely coat the aggregate.

Immediately before mixing lime slurry with the aggregate, water must not visibly separate from the aggregate.

Proportion lime slurry and aggregate by weight in a continuous process.

39-1.02E Liquid Antistrip Treatment

Liquid antistrip must be from 0.25 to 1.0 percent by weight of asphalt binder. Do not use liquid antistrip as a substitute for asphalt binder.

Liquid antistrip total amine value must be 325 minimum when tested under ASTM D2074.

Use only 1 liquid antistrip type or brand at a time. Do not mix liquid antistrip types or brands.

Store and mix liquid antistrip under the manufacturer's instructions.

39-1.02F–39-1.02G Reserved

39-1.02H Hot Mix Asphalt Production

39-1.02H(1) General

Do not start HMA production before verification and authorization of JMF.

HMA plants must be Department-qualified. Before production, the HMA plant must have a current qualification under the Department's Materials Plant Quality Program.

For lime treated aggregate, the HMA plant must be equipped with a bag-house dust system. Material collected in the dust system must be returned to the mix.

Weighing and metering devices used for the production of HMA modified with additives must comply with the requirements of the Department's Material Plant Quality Program. If a loss-in-weight meter is used for dry HMA additive, the meter must have an automatic and integral material delivery control system for the refill cycle.

Calibrate the loss-in-weight meter by:

1. Including at least 1 complete system refill cycle during each calibration test run
2. Operating the device in a normal run mode for 10 minutes immediately before starting the calibration process
3. Isolating the scale system within the loss-in-weight feeder from surrounding vibration
4. Checking the scale system within the loss-in-weight feeder for accuracy before and after the calibration process and daily during mix production

DocuSign Envelope ID: 894511EA-295B-49EB-A393-D26A6837FDD4

5. Using a 15-minute or 250-pound-minimum test run size for a dry ingredient delivery rate of less than 1 ton per hour.
6. Complying with the limits of Table B, "Conveyor Scale Testing Extremes," in the Department's Material Plant Quality Program

10-17-14

Proportion aggregate by hot or cold-feed control.
Aggregate temperature must not be more than 375 degrees F when mixed with the asphalt binder.

04-18-14

Asphalt binder temperature must be from 275 to 375 degrees F when mixed with aggregate.
Mix HMA ingredients into a homogeneous mixture of coated aggregates.
HMA with or without RAP must not be more than 325 degrees F.
For HMA produced using warm mix asphalt technology, HMA must be at a temperature between 240 and 325 degrees F.
If method compaction is used, HMA must be produced at a temperature between 305 and 325 degrees F.
If you stop production for longer than 30 days, a production start-up evaluation is required.

39-1.02H(2) Liquid Antistrip

If 3 consecutive sets of recorded production data show actual delivered liquid antistrip weight is more than ±1 percent of the authorized mix design liquid antistrip weight, stop production and take corrective action.
If a set of recorded production data shows actual delivered liquid antistrip weight is more than ±2 percent of the authorized mix design liquid antistrip weight, stop production. If the liquid antistrip weight exceeds 1.2 percent of the asphalt binder weight, do not use the HMA represented by that data.
The continuous mixing plant controller proportioning the HMA must produce a production data log. The log consists of a series of data sets captured at 10-minute intervals throughout daily production. The data must be a production activity register and not a summation. The material represented by the data is the quantity produced 5 minutes before and 5 minutes after the capture time. For the duration of the Contract, collected data must be stored by the plant controller or a computer's memory at the plant.
The Engineer orders proportioning activities stopped for any of the following:

1. You do not submit data
2. You submit incomplete, untimely, or incorrectly formatted data
3. You do not take corrective actions
4. You take late or unsuccessful corrective actions
5. You do not stop production when proportioning tolerances are exceeded
6. You use malfunctioning or failed proportioning devices

If you stop production, notify the Engineer of any corrective actions taken before resuming.

39-1.02H(3) Warm Mix Asphalt Technology

Proportion all ingredients by weight. The HMA plant process controller must be the sole source of ingredient proportioning control and be fully interfaced with all scales and meters used in the production process. The addition of the HMA additive must be controlled by the plant process controller.
Liquid ingredient additive, including a normally dry ingredient made liquid, must be proportioned with a mass flow meter at continuous mixing plants. Use a mass flow meter or a container scale to proportion liquid additives at batch mixing plants.
Continuous mixing plants using HMA additives must comply with the following:

DocuSign Envelope ID: 894511EA-295B-49EB-A393-D26A6837FDD4

1. Dry ingredient additives for continuous production must be proportioned with a conveyor scale or a loss-in-weight meter.
2. HMA plant process controller and ingredient measuring systems must be capable of varying all ingredient feed rates proportionate with the dry aggregate delivery at all production rates and rate changes.
3. Liquid HMA additive must enter the production stream with the binder. Dry HMA additive must enter the production stream at or before the mixing area.
4. If dry HMA additives are used at continuous mixing HMA plants, baghouse dust systems must return all captured material to the mix.
5. HMA additive must be proportioned to within ±0.3 percent of the target additive rate.

Batch mixing plants using HMA additives must comply with the following:

1. Metered HMA additive must be placed in an intermediate holding vessel before being added to the stream of asphalt binder as it enters the pugmill.
2. If a container scale is used, weigh additive before combining with asphalt binder. Keep the container scale separate from other ingredient proportioning. The container scale capacity must be no more than twice the volume of the maximum additive batch size. The container scale's graduations must be smaller than the proportioning tolerance or 0.001 times the container scale capacity.
3. Dry HMA additive proportioning devices must be separate from metering devices for the aggregates and asphalt binder. Proportion dry HMA additive directly into the pugmill or place in an intermediate holding vessel to be added to the pugmill at the appropriate time in the batch cycle. Dry ingredients for batch production must be proportioned with a hopper scale.
4. Zero tolerance for the HMA additive batch scale is ±0.5 percent of the target additive weight. The indicated HMA additive batch scale weight may vary from the preselected weight setting by up to ±1.0 percent of the target additive weight.

39-1.02I Geosynthetic Pavement Interlayer

Geosynthetic pavement interlayer must comply with the specifications for pavement fabric, paving mat, paving grid, paving geocomposite grid, or geocomposite strip membrane as shown.

The asphalt binder for geosynthetic pavement interlayer must be PG 64-10, PG 64-16, or PG 70-10.

39-1.02J Tack Coat

Tack coat must comply with the specifications for asphaltic emulsion or asphalt binder. Choose the type and grade.

39-1.02K Miscellaneous Areas and Dikes

For miscellaneous areas and dikes:

1. Choose either the 3/8-inch or 1/2-inch aggregate gradation for Type A HMA.
2. Minimum asphalt binder content must be 6.8 percent for 3/8-inch aggregate and 6.0 percent for 1/2-inch aggregate. If you request and the Engineer authorizes, you may reduce the minimum asphalt binder content.
3. Choose asphalt binder Grade PG 64-10, PG 64-16 or PG 70-10.

For HMA used in miscellaneous areas and dikes, sections 39-1.01C, 39-1.01D, 39-1.02B, 39-1.02D(3), and 39-1.02E–J do not apply.

39-1.03 CONSTRUCTION

39-1.03A General

Do not place HMA on wet pavement or frozen surface.

You may deposit HMA in a windrow and load it in the paver if:

1. Paver is equipped with a hopper that automatically feeds the screed
2. Loading equipment can pick up the windrowed material and deposit it in the paver hopper without damaging base material
3. Activities for deposit, pickup, loading, and paving are continuous
4. HMA temperature in the windrow does not fall below 260 degrees F

DocuSign Envelope ID: 894511EA-295B-49EB-A393-D26A6837FDD4

10-17-14

HMA placed in a windrow on the roadway surface must not extend more than 250 feet in front of the loading equipment or material transfer vehicle.

04-18-14

You may place HMA in 1 or more layers on areas less than 5 feet wide and outside the traveled way, including shoulders. You may use mechanical equipment other than a paver for these areas. The equipment must produce uniform smoothness and texture.

HMA handled, spread, or windrowed must not stain the finished surface of any improvement, including pavement.

Do not use petroleum products such as kerosene or diesel fuel to release HMA from trucks, spreaders, or compactors.

HMA must be free of:

1. Segregation
2. Coarse or fine aggregate pockets
3. Hardened lumps

Where density or data core samples are taken, backfill and compact holes with authorized material.

Complete finish rolling activities before the pavement surface temperature is:

1. Below 150 degrees F for HMA with unmodified binder
2. Below 140 degrees F for HMA with modified binder
3. Below 130 degrees F for HMA with warm mix asphalt technology

39-1.03B Spreading and Compacting Equipment

39-1.03B(1) General

Paving equipment for spreading must be:

1. Self-propelled
2. Mechanical
3. Equipped with a screed or strike-off assembly that can distribute HMA the full width of a traffic lane
4. Equipped with a full-width compacting device
5. Equipped with automatic screed controls and sensing devices that control the thickness, longitudinal grade, and transverse screed slope

Install and maintain grade and slope references.

The screed must be heated and produce a uniform HMA surface texture without tearing, shoving, or gouging.

The paver must not leave marks such as ridges and indentations unless you can eliminate them by rolling.

Rollers must be equipped with a system that prevents HMA from sticking to the wheels. You may use a parting agent that does not damage the HMA or impede the bonding of layers.

In areas inaccessible to spreading and compacting equipment:

1. Spread the HMA by any means to obtain the specified lines, grades, and cross sections
2. Use a pneumatic tamper, plate compactor, or equivalent to achieve thorough compaction

39-1.03B(2) Material Transfer Vehicle

If a material transfer vehicle is specified, the material transfer vehicle must have sufficient capacity to prevent stopping the paver and must be capable of:

1. Either receiving HMA directly from trucks or using a windrow pickup head to load it from a windrow deposited on the roadway surface
2. Remixing the HMA with augers before transferring into the paver's receiving hopper or feed system
3. Transferring HMA directly into the paver's receiving hopper or feed system

DocuSign Envelope ID: 894511EA-295B-49EB-A393-D26A6837FDD4

39-1.03B(3) Method Compaction Equipment

For method compaction, each paver spreading HMA must be followed by 3 rollers:

1. One vibratory roller specifically designed to compact HMA. The roller must be capable of at least 2,500 vibrations per minute and must be equipped with amplitude and frequency controls. The roller's gross static weight must be at least 7.5 tons.
2. One oscillating type pneumatic-tired roller at least 4 feet wide. Pneumatic tires must be of equal size, diameter, type, and ply. The tires must be inflated to 60 psi minimum and maintained so that the air pressure does not vary more than 5 psi.
3. One steel-tired, 2-axle tandem roller. The roller's gross static weight must be at least 7.5 tons.

Each roller must have a separate operator. Rollers must be self-propelled and reversible.

39-1.03B(4)–39-1.03B(6) Reserved

39-1.03C Surface Preparation

39-1.03C(1) General

Before placing HMA, remove loose paving particles, dirt, and other extraneous material by any means including flushing and sweeping.

39-1.03C(2) Subgrade

Prepare subgrade to receive HMA under the sections for the material involved. Subgrade must be free of loose and extraneous material.

39-1.03C(3) Reserved

39-1.03C(4) Prepaving Inertial Profiler

Section 39-1.03C(4) applies to existing asphalt concrete surfaces receiving an HMA overlay if a bid item for prepaving inertial profiler is shown in the Bid Item List.

Before starting paving activities, perform prepaving inertial profiler measurements. Prepaving inertial profiler includes taking profiles of the existing pavement, analyzing the data with ProVAL to determine existing pavement International Roughness Index, Mean Roughness Index, and areas of localized roughness.

If the Contract includes cold planing, perform prepaving inertial profiler measurements before cold planing.

If the Contract includes replace asphalt concrete surfacing, perform prepaving inertial profiler measurements after replacing the asphalt concrete surfacing.

39-1.03C(5) Prepaving Grinding

Section 39-1.03C(5) applies to all existing asphalt concrete surfaces that will not be cold planned or milled and that will receive an HMA overlay less than or equal to 0.20 foot exclusive of OGFC if a bid item for prepaving grinding day is shown in the Bid Item List.

After performing prepaving inertial profiling, correct areas of localized roughness greater than 180 in/mi.

Prepaving grinding day includes correcting areas of localized roughness, taking profiles of the corrected areas, and submitting profile data as specified in section 39-1.01C(13)(d).

10-17-14

Notify the Engineer of those areas of localized roughness that cannot be corrected by prepaving grinding according to the ProVAL smoothness assurance analysis grinding report. The Engineer responds to your notification within 5 business days.

04-18-14

For those areas of localized roughness that cannot be corrected by grinding, the Engineer may order you to either (1) not correct the areas of localized roughness or (2) correct areas of localized roughness by a different method and take profiles of the corrected areas with an inertial profiler.

DocuSign Envelope ID: 894511EA-295B-49EB-A393-D26A6837FDD4

Corrective work performed by a different method, including taking profiles of the corrected areas and associated traffic control, is change order work.
If ordered not to correct areas of localized roughness, the smoothness specifications do not apply to the final pavement surface placed in those areas.
Correct prepaving areas of localized roughness that you predict will cause the final surface of HMA pavement to be noncompliant with the smoothness specifications. After correcting prepaving areas of localized roughness, take profiles of the corrected area and submit profile data as specified in section 39-1.01C(13)(d).
Dispose of grinding residue.
Pave within 7 days of correcting areas.
The final pavement surface must comply with section 39-1.01D(9)(c).
If the Engineer determines more time is required for prepaving grinding than the Contract allows for and if prepaving grinding is a controlling activity, the Engineer makes a time adjustment.

39-1.03C(6) Tack Coat

Apply tack coat:
1. To existing pavement including planed surfaces
2. Between HMA layers
3. To vertical surfaces of:
   - 3.1. Curbs
   - 3.2. Gutters
   - 3.3. Construction joints

Before placing HMA, apply tack coat in 1 application at the minimum residual rate shown in the following table for the condition of the underlying surface:

Tack Coat Application Rates for HMA

HMA over:	Minimum Residual Rates (gal/sq yd)		
	CSS1/CSS1h, SS1/SS1h and QS1h/CQS1h Asphaltic Emulsion	CRS1/CRS2, RS1/RS2 and QS1/CQS1 Asphaltic Emulsion	Asphalt Binder and PMRS2/PMCRS2 and PMRS2h/PMCRS2h Asphaltic Emulsion
New HMA (between layers)	0.02	0.03	0.02
PCC and existing AC surfacing	0.03	0.04	0.03
Planed pavement	0.05	0.06	0.04

Notify the Engineer if you dilute asphaltic emulsion with water. The weight ratio of added water to asphaltic emulsion must not exceed 1 to 1.
Measure added water either by weight or volume under section 9-1.02 or you may use water meters from water districts, cities, or counties. If you measure water by volume, apply a conversion factor to determine the correct weight.
With each dilution, submit:
1. Weight ratio of water to bituminous material in the original asphaltic emulsion
2. Weight of asphaltic emulsion before diluting
3. Weight of added water
4. Final dilution weight ratio of water to asphaltic emulsion

Apply to vertical surfaces with a residual tack coat rate that will thoroughly coat the vertical face without running off.
If you request and the Engineer authorizes, you may:
1. Change tack coat rates
2. Omit tack coat between layers of new HMA during the same work shift if:

DocuSign Envelope ID: 894511EA-295B-49EB-A393-D26A6837FDD4

2.1. No dust, dirt, or extraneous material is present
2.2. Surface is at least 140 degrees F

Immediately in advance of placing HMA, apply additional tack coat to damaged areas or where loose or extraneous material is removed.
Close areas receiving tack coat to traffic. Do not track tack coat onto pavement surfaces beyond the job site.
Asphalt binder tack coat temperature must be from 285 to 350 degrees F when applied.

39-1.03C(7) Geosynthetic Pavement Interlayer

If specified, place geosynthetic pavement interlayer over a coat of asphalt binder. Place geosynthetic pavement interlayer in compliance with the manufacturer's instructions.
Before placing the geosynthetic pavement interlayer and asphalt binder:

1. Repair cracks 1/4 inch and wider, spalls, and holes in the pavement. Repairing cracks is change order work.
2. Clean the pavement of loose and extraneous material.

Immediately before placing the interlayer, apply 0.25 ± 0.03 gallon of asphalt binder per square yard of interlayer or until the fabric is saturated. Apply asphalt binder the width of the geosynthetic pavement interlayer plus 3 inches on each side. At an interlayer overlap, apply asphalt binder on the lower interlayer the same overlap distance as the upper interlayer.
Align and place the interlayer with no overlapping wrinkles, except a wrinkle that overlaps may remain if it is less than 1/2 inch thick. If the overlapping wrinkle is more than 1/2 inch thick, cut the wrinkle out and overlap the interlayer no more than 2 inches.
The minimum HMA thickness over the interlayer must be 0.12 foot thick including conform tapers. Do not place the interlayer on a wet or frozen surface.
Overlap the interlayer borders between 2 to 4 inches. In the direction of paving, overlap the following roll with the preceding roll at any break.
You may use rolling equipment to correct distortions or wrinkles in the interlayer.
If asphalt binder tracked onto the interlayer or brought to the surface by construction equipment causes interlayer displacement, cover it with a small quantity of HMA.
Before placing HMA on the interlayer, do not expose the interlayer to:

1. Traffic except for crossings under traffic control and only after you place a small HMA quantity
2. Sharp turns from construction equipment
3. Damaging elements

Pave HMA on the interlayer during the same work shift.

39-1.03D Longitudinal Joints

39-1.03D(1) General

Longitudinal joints in the top layer must match lane lines. Alternate the longitudinal joint offsets in the lower layers at least 0.5 foot from each side of the lane line. You may request other longitudinal joint placement patterns.
A vertical longitudinal joint of more than 0.15 foot is not allowed at any time between adjacent lanes open to traffic.
For HMA thickness of 0.15 foot or less, the distance between the ends of the adjacent surfaced lanes at the end of each day's work must not be greater than can be completed in the following day of normal paving.
For HMA thickness greater than 0.15 foot, you must place HMA on adjacent traveled way lanes or shoulder so that at the end of each work shift the distance between the ends of HMA layers on

DocuSign Envelope ID: 894511EA-295B-49EB-A393-D26A6837FDD4

adjacent lanes is from 5 to 10 feet. Place additional HMA along the transverse edge at each lane's end and along the exposed longitudinal edges between adjacent lanes. Hand rake and compact the additional HMA to form temporary conforms. You may place Kraft paper or other authorized release agent under the conform tapers to facilitate the taper removal when paving activities resume.

If placing HMA against the edge of existing pavement, sawcut or grind the pavement straight and vertical along the joint and remove extraneous material.

39-1.03D(2) Tapered Notched Wedge

For divided highways with an HMA lift thickness greater than 0.15 foot, you may construct a 1-foot wide tapered notched wedge joint as a longitudinal joint between adjacent lanes open to traffic. A vertical notch of 0.75 inch maximum must be placed at the top and bottom of the tapered wedge. The tapered notched wedge must retain its shape while exposed to traffic. Pave the adjacent lane within 1 day.

Construct the tapered portion of the tapered notched wedge with an authorized strike-off device. The strike-off device must provide a uniform slope and must not restrict the main screed of the paver.

You may use a device attached to the screed to construct longitudinal joints that will form a tapered notched wedge in a single pass. The tapered notched wedge must be compacted to a minimum of 91 percent compaction.

39-1.03E Edge Treatments

Construct edge treatment on the HMA pavement as shown.

Where a safety edge is required, use the same type of HMA used for the adjacent lane or shoulder. The edge of roadway where the safety edge treatment is to be placed must have a solid base, free of debris such as loose material, grass, weeds, or mud. Grade areas to receive the safety edge as required.

The safety edge treatment must be placed monolithic with the adjacent lane or shoulder and shaped and compacted with a device attached to the paver.

The device must be capable of shaping and compacting HMA to the required cross section as shown. Compaction must be by constraining the HMA to reduce the cross sectional area by 10 to 15 percent. The device must produce a uniform surface texture without tearing, shoving, or gouging and must not leave marks such as ridges and indentations. The device must be capable of transition to cross roads, driveways, and obstructions.

For safety edge treatment, the angle of the slope must not deviate by more than ±5 degrees from the angle shown. Measure the angle from the plane of the adjacent finished pavement surface.

If paving is done in multiple lifts, the safety edge treatment must be placed with each lift.

Short sections of hand work are allowed to construct transitions for safety edge treatment.

39-1.03F Widening Existing Pavement

If widening existing pavement, construct new pavement structure to match the elevation of the existing pavement's edge before placing HMA over the existing pavement.

39-1.03G Shoulders, Medians, and Other Road Connections

Until the adjoining through lane's top layer has been paved, do not pave the top layer of:

1. Shoulders
2. Tapers
3. Transitions
4. Road connections
5. Driveways
6. Curve widenings
7. Chain control lanes

DocuSign Envelope ID: 894511EA-295B-49EB-A393-D26A6837FDD4

8. Turnouts
9. Turn pockets

If the number of lanes changes, pave each through lane's top layer before paving a tapering lane's top layer. Simultaneous to paving a through lane's top layer, you may pave an adjoining area's top layer, including shoulders. Do not operate spreading equipment on any area's top layer until completing final compaction.
If shoulders or median borders are shown, pave shoulders and median borders adjacent to the lane before opening a lane to traffic.
If shoulder conform tapers are shown, place conform tapers concurrently with the adjacent lane's paving.
If a driveway or a road connection is shown, place additional HMA along the pavement's edge to conform to road connections and driveways. Hand rake, if necessary, and compact the additional HMA to form a smooth conform taper.

39-1.03H Leveling

Section 39-1.03H applies if a bid item for hot mix asphalt (leveling) is shown on the Bid Item List.
Fill and level irregularities and ruts with HMA before spreading HMA over the base, existing surfaces, or bridge decks. You may use mechanical equipment other than a paver for these areas. The equipment must produce uniform smoothness and texture. HMA used to change an existing surface's cross slope or profile is not paid for as hot mix asphalt (leveling).

39-1.03I Miscellaneous Areas and Dikes

Prepare the area to receive HMA for miscellaneous areas and dikes, including excavation and backfill as needed.
Spread miscellaneous areas in 1 layer and compact to the specified lines and grades.
In median areas adjacent to slotted median drains, each layer of HMA must not exceed 0.20 foot maximum compacted thickness.
The finished surface must be:
1. Textured uniformly
2. Compacted firmly
3. Without depressions, humps, and irregularities

39-1.03J Replace Asphalt Concrete Surfacing

Where replace asphalt concrete surfacing is shown, remove existing asphalt concrete surfacing and replace with HMA. The Engineer determines the exact limits of asphalt concrete surfacing to be replaced.
Replace asphalt concrete in a lane before the lane is specified to be opened to traffic.
Before removing asphalt concrete, outline the replacement area and cut neat lines with a saw or grind to full depth of the existing asphalt concrete. Do not damage asphalt concrete and base remaining in place.
If the base is excavated beyond the specified plane, replace it with HMA. The Department does not pay for this HMA.
Do not use a material transfer vehicle if replace asphalt concrete surfacing is specified.

39-1.03K–39-1.03N Reserved

39-1.03O Compaction

39-1.03O(1) General

Rolling must leave the completed surface compacted and smooth without tearing, cracking, or shoving.
If a vibratory roller is used as a finish roller, turn the vibrator off.

DocuSign Envelope ID: 894511EA-295B-49EB-A393-D26A6837FDD4

Do not open new HMA pavement to traffic until the surface temperature is below 130 degrees F. If the surface to be paved is both in sunlight and shade, pavement surface temperatures are taken in the shade.

39-1.03O(2) Method Compaction

Use method compaction for any of the following conditions:

10-17-14

1. HMA pavement thickness shown is less than 0.15 foot
2. Replace asphalt concrete surfacing
3. Leveling courses
4. Areas the Engineer determines conventional compaction and compaction measurement methods are impeded

04-18-14

HMA compaction coverage is the number of passes needed to cover the paving width. A pass is 1 roller's movement parallel to the paving in either direction. Overlapping passes are part of the coverage being made and are not a subsequent coverage. Do not start a coverage until completing the prior coverage.

Method compaction must consist of performing:

1. Breakdown compaction of each layer with 3 coverages using a vibratory roller. The speed of the vibratory roller in miles per hour must not exceed the vibrations per minute divided by 1,000. If the HMA layer thickness is less than 0.08 foot, turn the vibrator off.
2. Intermediate compaction of each layer of HMA with 3 coverages using a pneumatic-tired roller at a speed not to exceed 5 mph.
3. Finish compaction of HMA with 1 coverage using a steel-tired roller.

Start rolling at the lower edge and progress toward the highest part.

The Engineer may order fewer coverages if the layer thickness of HMA is less than 0.15 foot.

39-1.03O(3)–39-1.03O(5) Reserved

39-1.03P Smoothness Corrections

If the final surface of the pavement does not comply with the smoothness specifications, grind the pavement to within specified tolerances, remove and replace it, or place an overlay of HMA. Do not start corrective work until your method is authorized.

Do not use equipment with carbide cutting teeth to grind the pavement unless authorized.

Smoothness correction of the final pavement surface must leave at least 75 percent of the specified HMA thickness. If ordered, core the pavement at the locations determined by the Engineer. Coring, including traffic control, is change order work. Remove and replace deficient pavement areas where the overlay thickness is less than 75 percent of the thickness specified as determined by the Engineer.

Corrected HMA pavement areas must be uniform rectangles with edges:

1. Parallel to the nearest HMA pavement edge or lane line
2. Perpendicular to the pavement centerline

On ground areas not to be overlaid with OGFC, apply fog seal coat under section 37-2.

Where corrections are made within areas requiring testing with inertial profiler, reprofile the entire lane length with the inertial profiler device.

Where corrections are made within areas requiring testing with a 12-foot straightedge, retest the corrected area with the straightedge.

39-1.03Q Data Cores

Section 39-1.03Q applies if a bid item for data core is shown on the Bid Item List.

DocuSign Envelope ID: 894511EA-295B-49EB-A393-D26A6837FDD4

Take data cores of the completed HMA pavement, underlying base, and subbase material. Notify the Engineer 3 business days before coring.
Protect data cores and surrounding pavement from damage.
Take 4-inch or 6-inch diameter data cores:

1. At the beginning, end, and every 1/2 mile within the paving limits of each route on the project
2. After all paving is complete
3. From the center of the specified lane

On a 2-lane roadway, take data cores from either lane. On a 4-lane roadway, take data cores from each direction in the outermost lane. On a roadway with more than 4 lanes, take data cores from the median lane and the outermost lane in each direction.
Each core must include the stabilized materials encountered. You may choose not to recover unstabilized material but you must identify the material. Unstabilized material includes:

1. Granular material
2. Crumbled or cracked stabilized material
3. Sandy or clayey soil

After data core summary and photograph submittal, dispose of cores.

39-1.04 PAYMENT

Geosynthetic pavement interlayer is measured by the square yard for the actual pavement area covered.
If tack coat, asphalt binder, and asphaltic emulsion are paid as separate bid items, their bid items are measured under section 92 or section 94.
The Department does not adjust the unit price for an increase or decrease in the tack coat quantity.
HMA of the type shown in the Bid Item List is measured based on the combined mixture weight.
If recorded batch weights are printed automatically, the bid item for HMA is measured by using the printed batch weights, provided:

1. Total aggregate and supplemental fine aggregate weight per batch is printed. If supplemental fine aggregate is weighed cumulatively with the aggregate, the total aggregate batch weight must include the supplemental fine aggregate weight.
2. Total asphalt binder weight per batch is printed.
3. Each truckload's zero tolerance weight is printed before weighing the first batch and after weighing the last batch.
4. Time, date, mix number, load number and truck identification is correlated with a load slip.
5. Copy of the recorded batch weights is certified by a licensed weigh master and submitted.

Place hot mix asphalt dike of the type shown in the Bid Item List is measured along the completed length. Payment for the HMA used to construct the dike is not included in the payment for place hot mix asphalt dike.
Place hot mix asphalt (miscellaneous areas) is measured as the in-place compacted area. Payment for the HMA used for miscellaneous areas is not included in the payment for place hot mix asphalt (miscellaneous areas).
If replace asphalt concrete surfacing is shown, the bid item for replace asphalt concrete is measured based on the specified dimensions and any adjustments ordered.
The Department does not adjust the unit price for an increase or decrease in the prepaving grinding day quantity.
The Department reduces payment for noncompliance of HMA density based on the factors shown in the following table:

DocuSign Envelope ID: 894511EA-295B-49EB-A393-D26A6837FDD4

Reduced Payment Factors for Percent of Maximum Theoretical Density

HMA percent of maximum theoretical density	Reduced payment factor	HMA percent of maximum theoretical density	Reduced payment factor
91.0	0.0000	97.0	0.0000
90.9	0.0125	97.1	0.0125
90.8	0.0250	97.2	0.0250
90.7	0.0375	97.3	0.0375
90.6	0.0500	97.4	0.0500
90.5	0.0625	97.5	0.0625
90.4	0.0750	97.6	0.0750
90.3	0.0875	97.7	0.0875
90.2	0.1000	97.8	0.1000
90.1	0.1125	97.9	0.1125
90.0	0.1250	98.0	0.1250
89.9	0.1375	98.1	0.1375
89.8	0.1500	98.2	0.1500
89.7	0.1625	98.3	0.1625
89.6	0.1750	98.4	0.1750
89.5	0.1875	98.5	0.1875
89.4	0.2000	98.6	0.2000
89.3	0.2125	98.7	0.2125
89.2	0.2250	98.8	0.2250
89.1	0.2375	98.9	0.2375
89.0	0.2500	99.0	0.2500
< 89.0	Remove and replace	> 99.0	Remove and replace

39-2 TYPE A HOT MIX ASPHALT

39-2.01 GENERAL

39-2.01A Summary

Section 39-2 includes specifications for producing and placing Type A hot mix asphalt.
You may produce Type A HMA using an authorized warm mix asphalt technology.

39-2.01B Definitions

Reserved

39-2.01C Submittals

39-2.01C(1) General

Reserved

39-2.01C(2) Job Mix Formula

The JMF must be based on an HMA mix design determined as described in the Superpave Mix Design SP-2 Manual by the Asphalt Institute.

39-2.01C(3) Reclaimed Asphalt Pavement

Submit QC test results for RAP gradation with the combined aggregate gradation within 2 business days of taking RAP samples during HMA production.

39-2.01C(4)–39-2.01C(6) Reserved

39-2.01D Quality Control and Assurance

39-2.01D(1) General

Reserved

39-2.01D(2) Quality Control

39-2.01D(2)(a) General

DocuSign Envelope ID: 894511EA-295B-49EB-A393-D26A6837FDD4

Reserved

39-2.01D(2)(b) Aggregate

Test the quality characteristics of aggregate under the test methods and frequencies shown in the following table:

Aggregate Testing Frequencies

Quality characteristic	Test method	Minimum testing frequency
Gradation[a]	AASHTO T 27	1 per 750 tons and any remaining part
Sand equivalent[b, c]	AASHTO T 176	
Moisture content[d]	AASHTO T 329	
Crushed particles	AASHTO T 335	1 per 10,000 tons or 2 per project whichever is greater
Los Angeles rattler	AASHTO T 96	
Flat and elongated particles	ASTM D4791	
Fine aggregate angularity	AASHTO T 304 Method A	

[a]If RAP is used, test the combined aggregate gradation under California Test 384.
[b]Reported value must be the average of 3 tests from a single sample.
[c]Use of a sand reading indicator is required as shown in AASHTO T 176, Figure 1. Sections 4.7, 4.8, 7.1.2, 8.4.2 and 8.4.3 do not apply.
[d]Test at continuous mixing plants only. If RAP is used, test the RAP moisture content at continuous mixing plant and batch mixing plant.

For lime treated aggregate, test aggregate before treatment and test for gradation and moisture content during HMA production.

39-2.01D(2)(c) Reclaimed Asphalt Pavement

10-17-14

Sample and test processed RAP at a minimum frequency of 1 sample per 1000 tons with a minimum of 6 samples per fractionated stockpile. If the fractionated stockpile has not been augmented, the 3 RAP samples taken and tested for mix design may be part of this minimum sample requirement. If a fractionated RAP stockpile is augmented, sample and test processed RAP quality characteristics at a minimum frequency of 1 sample per 500 tons of augmented RAP.

04-18-14

The combined RAP sample when tested under AASHTO T 164 must be within ±2.0 percent of the average asphalt binder content reported on page 4 of your Contractor Hot Mix Asphalt Design Data form. If new fractionated RAP stockpiles are required, the average binder content of the new fractionated RAP stockpile must be within ±2.0 percent of the average binder reported on page 4 of your Contractor Hot Mix Asphalt Design Data form.

The combined RAP sample when tested under AASHTO T 209 must be within ±0.06 of the average maximum specific gravity reported on page 4 of your Contractor Hot Mix Asphalt Design Data form.

During HMA production, sample RAP twice daily and perform QC testing for:

1. Aggregate gradation at least once a day under California Test 384
2. Moisture content at least twice a day

39-2.01D(2)(d) Hot Mix Asphalt Production

Test the quality characteristics of HMA under the test methods and frequencies shown in the following table:

DocuSign Envelope ID: 894511EA-295B-49EB-A393-D26A6837FDD4

Hot Mix Asphalt Testing Frequencies

Quality characteristic	Test method	Minimum testing frequency
Asphalt binder content	AASHTO T 308 Method A	1 per 750 tons and any remaining part
HMA moisture content	AASHTO T 329	1 per 2,500 tons but not less than 1 per paving day
Air voids content	AASHTO T 269	1 per 4,000 tons or 2 every 5 paving days, whichever is greater
Voids in mineral aggregate	SP-2 Asphalt Mixture Volumetrics	1 per 10,000 tons or 2 per project whichever is greater
Dust proportion	SP-2 Asphalt Mixture Volumetrics	
Density of core	California Test 375	2 per paving day
Nuclear gauge density	California Test 375	3 per 250 tons or 3 per paving day, whichever is greater
Hamburg wheel track	AASHTO T 324 (Modified)	1 per 10,000 tons or 1 per project, whichever is greater
Moisture susceptibility	AASHTO T 283	

39-2.01D(3)–39-2.01D(4) Reserved

39-2.01D(5) Department Acceptance

The Department accepts Type A HMA based on compliance with:

1. Aggregate quality requirements shown in the following table:

DocuSign Envelope ID: 894511EA-295B-49EB-A393-D26A6837FDD4

Aggregate Quality

Quality characteristic	Test method	Requirement
Aggregate gradation[a]	AASHTO T 27	JMF ± Tolerance
Percent of crushed particles Coarse aggregate (min, %) One-fractured face Two-fractured faces Fine aggregate (min, %) (Passing No. 4 sieve and retained on No. 8 sieve.) One fractured face	AASHTO T 335	 95 90 70
Los Angeles Rattler (max, %) Loss at 100 Rev. Loss at 500 Rev.	AASHTO T 96	 12 40
Sand equivalent (min.)[b, c]	AASHTO T 176	47
Flat and elongated particles (max, % by weight at 5:1)	ASTM D4791	10
Fine aggregate angularity (min, %)[d]	AASHTO T 304 Method A	45

[a]The Engineer determines combined aggregate gradations containing RAP under California Test 384.
[b]Reported value must be the average of 3 tests from a single sample.
[c]Use of a sand reading indicator is required as shown in AASHTO T 176, Figure 1. Sections 4.7, 4.8, 7.1.2, 8.4.2 and 8.4.3 do not apply.
[d] The Engineer waives this specification if HMA contains 10 percent or less of nonmanufactured sand by weight of total aggregate. Manufactured sand is fine aggregate produced by crushing rock or gravel.

2. If RAP is used, RAP quality requirements shown in the following table:

Reclaimed Asphalt Pavement Quality

Quality characteristic	Test method	Requirement
Binder content (% within the average value reported)	AASHTO T 164	±2.0
Specific gravity (within the average value reported)	AASHTO T 209	±0.06

3. In-place HMA quality requirements shown in the following table:

DocuSign Envelope ID: 894511EA-295B-49EB-A393-D26A6837FDD4

Type A HMA Acceptance In Place

Quality characteristic	Test method	Requirement
Asphalt binder content (%)	AASHTO T 308 Method A	JMF -0.3, +0.5
HMA moisture content (max, %)	AASHTO T 329	1
Air voids content at N_{design} (%)[a, b]	AASHTO T 269	4 ± 1.5
Voids in mineral aggregate on plant-produced HMA (min, %)[a]	SP-2 Asphalt Mixture Volumetrics[c]	
Gradation:		
No. 4		15.5–18.5
3/8-inch		14.5–17.5
1/2-inch		13.5–16.5
3/4-inch		12.5–15.5
1-inch		
with NMAS[g] = 1-inch		12.5–15.5
with NMAS[g] = 3/4-inch		13.5–16.5
Dust proportion	SP-2 Asphalt Mixture Volumetrics	0.6–1.3
Density of core (% of max theoretical density)[e, f]	California Test 375	91–97
Hamburg wheel track (min number of passes at 0.5-inch rut depth)	AASHTO T 324 (Modified)	
Binder grade:		
PG 58		10,000
PG 64		15,000
PG 70		20,000
PG 76 or higher		25,000
Hamburg wheel track (min number of passes at inflection point)	AASHTO T 324 (Modified)	
Binder grade:		
PG 58		10,000
PG 64		10,000
PG 70		12,500
PG 76 or higher		15,000
Moisture susceptibility (min, psi, dry strength)	AASHTO T 283	100
Moisture susceptibility (min, psi, wet strength)	AASHTO T 283	70

[a]Prepare 3 briquettes. Report the average of 3 tests.
[b]The Engineer determines the bulk specific gravity of each lab-compacted briquette under AASHTO T 275, Method A, and theoretical maximum specific gravity under AASHTO T 209, Method A.
[c]Determine bulk specific gravity under AASHTO T 275, Method A.
[d]The Engineer determines the laboratory-prepared HMA value for mix design verification only.
[e]The Engineer determines percent of theoretical maximum density under California Test 375 except the Engineer uses:

1. AASHTO T 275 to determine in-place density of each density core
2. AASHTO T 209, Method A to determine theoretical maximum density instead of calculating test maximum density

[f]The Engineer determines theoretical maximum density under AASHTO T 209, Method A, at the frequency specified in California Test 375, Part 5. D.
[g]NMAS means nominal maximum aggregate size.

39-2.02 MATERIALS

39-2.02A General

Reserved

DocuSign Envelope ID: 894511EA-295B-49EB-A393-D26A6837FDD4

39-2.02B Mix Design

The mix design must comply with the requirements shown in the following table:

Type A HMA Mix Design Requirements

Quality characteristic	Test method	Requirement
Air voids content (%)	AASHTO T 269[a]	$N_{initial} > 8.0$ $N_{design} = 4.0$ ($N_{design} = 5.0$ for 1-inch aggregate) $N_{max} > 2.0$
Gyration compaction (no. of gyrations)	AASHTO T 312	$N_{initial} = 8$ $N_{design} = 85.0$ $N_{max} = 130$
Voids in mineral aggregate (min, %)[b] Gradation: No. 4 3/8-inch 1/2-inch 3/4-inch 1-inch with NMAS[e] = 1-inch with NMAS[e] = 3/4-inch	SP-2 Asphalt Mixture Volumetrics	 16.5–19.5 15.5–18.5 14.5–17.5 13.5–16.5 13.5–16.5 14.5–17.5
Dust proportion	SP-2 Asphalt Mixture Volumetrics	0.6–1.3
Hamburg wheel track (min number of passes at 0.5-inch rut depth) Binder grade: PG 58 PG 64 PG 70 PG 76 or higher	AASHTO T 324 (Modified)[c]	 10,000 15,000 20,000 25,000
Hamburg wheel track (min number of passes at the inflection point) Binder grade: PG 58 PG 64 PG 70 PG 76 or higher	AASHTO T 324 (Modified)[c]	 10,000 10,000 12,500 15,000
Moisture susceptibility, dry strength (min, psi)	AASHTO T 283[c]	100
Moisture susceptibility, wet strength (min, psi)	AASHTO T 283[c, d]	70

[a]Calculate the air voids content of each specimen using AASHTO T 275, Method A, to determine bulk specific gravity. Use AASHTO T 209, Method A, to determine theoretical maximum specific gravity. Use a digital manometer and pycnometer when performing AASHTO T 209.
[b]Measure bulk specific gravity using AASHTO T 275, Method A.
[c]Test plant produced HMA.
[d]Freeze thaw required.
[e]NMAS means nominal maximum aggregate size.

For HMA mixtures using RAP, the maximum binder replacement is 25.0 percent for surface course and 40.0 percent for lower courses.

DocuSign Envelope ID: 894511EA-295B-49EB-A393-D26A6837FDD4

For HMA with a binder replacement percent less than or equal to 25 percent of your specified OBC, you may request that the performance graded asphalt binder grade with upper and lower temperature classifications be reduced by 6 degrees C from the specified grade.
For HMA with a binder replacement greater than 25 percent of your specified OBC and less than or equal to 40 percent of OBC, you must use a performance graded asphalt binder grade with upper and lower temperature classifications reduced by 6 degrees C from the specified grade.

39-2.02C Asphalt Binder

Reserved

39-2.02D Aggregates

39-2.02D(1) General

Before the addition of asphalt binder and lime treatment, the aggregate must comply with the requirements shown in the following table:

Aggregate Quality

Quality characteristic	Test method	Requirement
Percent of crushed particles Coarse aggregate (min, %) One-fractured face Two-fractured faces Fine aggregate (min, %) (Passing No. 4 sieve and retained on No. 8 sieve.) One fractured face	AASHTO T 335	 95 90 70
Los Angeles Rattler (max, %) Loss at 100 Rev. Loss at 500 Rev.	AASHTO T 96	 12 40
Sand equivalent (min)[a, b]	AASHTO T 176	47
Flat and elongated particles (max, % by weight at 5:1)	ASTM D4791	10
Fine aggregate angularity (min, %)[c]	AASHTO T 304 Method A	45

[a]Reported value must be the average of 3 tests from a single sample.
[b]Use of a Sand Reader Indicator is required as shown in AASHTO T 176, Figure 1. Sections 4.7, 4.8, 7.1.2, 8.4.2 and 8.4.3 do not apply.
[c] The Engineer waives this specification if HMA contains 10 percent or less of nonmanufactured sand by weight of total aggregate, except if your JMF fails verification. Manufactured sand is fine aggregate produced by crushing rock or gravel.

39-2.02D(2) Aggregate Gradations

The aggregate gradations for Type A HMA must comply with the requirements shown in the following table:

10-17-14

Aggregate Gradation Requirements

Type A HMA pavement thickness shown	Gradation
0.10 foot	3/8 inch
Greater than 0.10 to less than 0.20 foot	1/2 inch
0.20 foot to less than 0.25 foot	3/4 inch
0.25 foot or greater	3/4 inch or 1 inch

DocuSign Envelope ID: 894511EA-295B-49EB-A393-D26A6837FDD4

Aggregate gradation must be within the target value limits for the specified sieve size shown in the following tables:

Aggregate Gradations
(Percentage Passing)

1-inch

Sieve size	Target value limit	Allowable tolerance
1"	100	--
3/4"	88–93	TV ± 5
1/2"	72–85	TV ± 6
3/8"	55–70	TV ± 6
No. 4	35–52	TV ± 7
No. 8	22–40	TV ± 5
No. 30	8–24	TV ± 4
No. 50	5–18	TV ± 4
No. 200	3–7	TV ± 2

3/4-inch

Sieve size	Target value limit	Allowable tolerance
1"	100	--
3/4"	90–98	TV ± 5
1/2"	70–90	TV ± 6
No. 4	42–58	TV ± 5
No. 8	29–43	TV ± 5
No. 30	10–23	TV ± 4
No. 200	2–7	TV ± 2

1/2-inch

Sieve sizes	Target value limit	Allowable tolerance
3/4"	100	--
1/2"	95–98	TV ± 5
3/8"	72–95	TV ± 5
No. 4	52–69	TV ± 5
No. 8	35–55	TV ± 5
No. 30	15–30	TV ± 4
No. 200	2–8	TV ± 2

3/8-inch

Sieve sizes	Target value limits	Allowable tolerance
1/2"	100	--
3/8"	95–98	TV ± 5
No. 4	55–75	TV ± 5
No. 8	30–50	TV ± 5
No. 30	15–35	TV ± 5
No. 200	2–9	TV ± 2

No. 4

Sieve sizes	Target value limits	Allowable tolerance
3/8"	100	--
No. 4	95–98	TV ± 5
No. 8	70–80	TV ± 6
No. 30	34–45	TV ± 5
No. 200	2–12	TV ± 4

DocuSign Envelope ID: 894511EA-295B-49EB-A393-D26A6837FDD4

39-2.02E Reclaimed Asphalt Pavement

You may substitute RAP for part of the virgin aggregate in a quantity up to a maximum of 25 percent of the aggregate blend.
Provide enough space for meeting all RAP handling requirements at your facility. Provide a clean, graded base, well drained area for stockpiles.
If RAP is from multiple sources, blend the RAP thoroughly and completely before fractionating.
For RAP substitution of 15 percent or less, fractionation is not required.
For RAP substitution greater than 15 percent, fractionate RAP stockpiles into 2 sizes, a coarse fraction RAP retained on 3/8-inch sieve, and a fine fraction RAP passing 3/8-inch sieve.
The RAP fractionation must comply with the requirements shown in the following table:

RAP Stockpile Fractionation Gradation Requirements

Quality characteristic	Test method	Requirement
Coarse (% passing the 1-inch sieve)	California Test 202[a]	100
Fine (% passing the 3/8-inch sieve)	California Test 202[a]	98–100

[a]Maximum mechanical shaking time is 10 minutes

You may use the coarse fractionated stockpile, the fine fractionated stockpile, or a combination of the coarse and fine fractionated stockpiles.
Isolate the processed RAP stockpiles from other materials. Store processed RAP in conical or longitudinal stockpiles. Processed RAP must not be agglomerated or be allowed to congeal in large stockpiles.

39-2.02F Hot Mix Asphalt Production

10-17-14

If RAP is used, the asphalt plant must automatically adjust the virgin asphalt binder to account for RAP percentage and RAP binder.
During production, you may adjust hot or cold-feed proportion controls for virgin aggregate and RAP. RAP must be within ±3 of RAP percentage shown in your Contractor Job Mix Formula Proposal form without exceeding 25 percent.
The aggregate temperature requirements do not apply to RAP.

39-2.03 CONSTRUCTION

Spread Type A HMA at the atmospheric and surface temperatures shown in the following table:

Minimum Atmospheric and Surface Temperatures for Type A HMA

Compacted layer thickness, feet	Atmospheric,°F		Surface,°F	
	Unmodified asphalt binder	Modified asphalt binder	Unmodified asphalt binder	Modified asphalt binder
< 0.15	55	50	60	55
≥ 0.15	45	45	50	50

For method compaction, the maximum compacted layer thickness must be 0.25 foot.

04-18-14

For Type A HMA placed under method compaction, if the asphalt binder is:

1. Unmodified, complete:
   - 1.1. 1st coverage of breakdown compaction before the surface temperature drops below 250 degrees F
   - 1.2. Breakdown and intermediate compaction before the surface temperature drops below 190 degrees F
   - 1.3. Finish compaction before the surface temperature drops below 150 degrees F
2. Modified, complete:

DocuSign Envelope ID: 894511EA-295B-49EB-A393-D26A6837FDD4

2.1. 1st coverage of breakdown compaction before the surface temperature drops below 240 degrees F
2.2. Breakdown and intermediate compaction before the surface temperature drops below 180 degrees F
2.3. Finish compaction before the surface temperature drops below 140 degrees F

If you request and the Engineer authorizes, you may cool Type A HMA with water when rolling activities are complete. Apply water under section 17.

39-2.04 PAYMENT

Not Used

39-3 RUBBERIZED HOT MIX ASPHALT–GAP GRADED

39-3.01 GENERAL

39-3.01A Summary

Section 39-3 includes specifications for producing and placing rubberized hot mix asphalt–gap graded.
You may produce RHMA-G using a warm mix asphalt technology.

39-3.01B Definitions

Reserved

39-3.01C Submittals

39-3.01C(1) General

10-17-14

At least 5 business days before use, submit the permit issued by the local air district for asphalt rubber binder blending equipment. If an air quality permit is not required by the local air district for producing asphalt rubber binder, submit verification from the local air district that an air quality permit is not required.
At least 10 days before RHMA-G production, submit the name of an authorized laboratory to perform QC testing for asphalt rubber binder. The authorized laboratory must comply with the Caltrans Independent Assurance Program.

04-18-14

39-3.01C(2) Job Mix Formula

With your proposed JMF include MSDS for:
1. Base asphalt binder
2. CRM and asphalt modifier
3. Blended asphalt rubber binder components

The JMF must be based on an HMA mix design determined as described in the Superpave Mix Design SP-2 Manual by the Asphalt Institute.

39-3.01C(3) Asphalt Rubber Binder

Submit a proposal for asphalt rubber binder design and profile. In the design, include the asphalt binder, asphalt modifier, and CRM and their proportions.
If you change asphalt rubber binder supplier or any component material used in asphalt rubber binder or its percentage, submit a new JMF.
For the asphalt rubber binder used, submit:
1. Log of production daily.
2. Certificate of compliance with test results for CRM and asphalt modifier with each truckload delivered to the HMA plant. The certificate of compliance for asphalt modifier must represent no more than 5,000 lb.
3. Certified weight slips for the CRM and asphalt modifier furnished.

DocuSign Envelope ID: 894511EA-295B-49EB-A393-D26A6837FDD4

10-17-14

4. QC test results on viscosity within 2 business days after sampling.
5. QC test results on cone penetration, resilience, and softening point within 3 business days after sampling.

Submit a certificate of compliance for the CRM and asphalt modifier. With the certificate of compliance, submit test results for CRM and asphalt modifier with each truckload delivered to the HMA plant.

04-18-14

39-3.01D Quality Control and Assurance

39-3.01D(1) General

Reserved

39-3.01D(2) Job Mix Formula Verification

If you request, the Engineer verifies RHMA-G quality requirements within 7 days of receiving all verification samples and after the JMF document submittal has been accepted.

39-3.01D(3) Quality Control

39-3.01D(3)(a) General

Reserved

39-3.01D(3)(b) Asphalt Rubber Binder

39-3.01D(3)(b)(i) General

The asphalt rubber binder blending plant must be authorized under the Department's Material Plant Quality Program.

10-17-14

Take asphalt rubber binder samples from the feed line connecting the asphalt rubber binder tank to the HMA plant.

04-18-14

39-3.01D(3)(b)(ii) Asphalt Modifier

Test asphalt modifier under the test methods and frequencies shown in the following table:

Asphalt Modifier for Asphalt Rubber Binder

Quality characteristic	Test method	Frequency
Viscosity	ASTM D445	1 per shipment
Flash point	ASTM D92	
Molecular Analysis		
Asphaltenes	ASTM D2007	1 per shipment
Aromatics	ASTM D2007	

39-3.01D(3)(b)(iii) Crumb Rubber Modifier

Sample and test scrap tire CRM and high natural CRM separately. Test CRM under the test methods and frequencies shown in the following table:

DocuSign Envelope ID: 894511EA-295B-49EB-A393-D26A6837FDD4

Crumb Rubber Modifier for Asphalt Rubber Binder

Quality characteristic	Test method	Frequency
Scrap tire CRM gradation	California Test 385	1 per 10,000 lb
High natural CRM gradation	California Test 385	1 per 3,400 lb
Wire in CRM	California Test 385	1 per 10,000 lb
Fabric in CRM	California Test 385	
CRM particle length	--	
CRM specific gravity	California Test 208	
Natural rubber content in high natural CRM	ASTM D297	1 per 3,400 lb

Sample and test scrap tire CRM and high natural CRM separately.

39-3.01D(3)(b)(iv) Asphalt Rubber Binder

10-17-14

Test asphalt rubber binder under the test methods and frequencies shown in the following table:

Quality characteristic	Test method	Frequency
Cone penetration	ASTM D217	1 per lot
Resilience	ASTM D5329	
Softening point	ASTM D36	
Viscosity	ASTM D7741	15 minutes before use per lot

Retain the sample from each lot. Test for cone penetration, resilience, and softening point for the first 3 lots and, if all 3 lots pass, the testing frequency may be reduced to once for every 3 lots.
If QC test results indicate that the asphalt rubber binder does not meet the specifications, take corrective action and notify the Engineer.

04-18-14

39-3.01D(3)(c) Aggregate

Test the quality characteristics of aggregate under the test methods and frequencies shown in the following table:

Aggregate Testing Frequencies

Quality characteristic	Test method	Minimum testing frequency
Gradation	AASHTO T 27	1 per 750 tons and any remaining part
Sand equivalent[a, b]	AASHTO T 176	
Moisture content[c]	AASHTO T 329	
Crushed particles	AASHTO T 335	1 per 10,000 tons or 2 per project, whichever is greater
Los Angeles rattler	AASHTO T 96	
Flat and elongated particles	ASTM D4791	
Fine aggregate angularity	AASHTO T 304 Method A	

[a]Reported value must be the average of 3 tests from a single sample.
bUse of a sand reading indicator is required as shown in AASHTO T 176, Figure 1.
Sections 4.7, 4.8, 7.1.2, 8.4.2 and 8.4.3 do not apply.
[c]Test at continuous mixing plants only

For lime treated aggregate, test aggregate before treatment and test for gradation and moisture content during RHMA-G production.

39-3.01D(3)(d) Hot Mix Asphalt Production

Test the quality characteristics of RHMA-G under the test methods and frequencies shown in the following table:

DocuSign Envelope ID: 894511EA-295B-49EB-A393-D26A6837FDD4

RHMA-G Mix Asphalt Testing Frequencies

Quality characteristic	Test method	Minimum testing frequency
Asphalt binder content	AASHTO T 308 Method A	1 per 750 tons and any remaining part
HMA moisture content	AASHTO T 329	1 per 2,500 tons but not less than 1 per paving day
Air voids content	AASHTO T 269	1 per 4,000 tons or 2 every 5 paving days, whichever is greater
Voids in mineral aggregate	SP-2 Asphalt Mixture Volumetrics	1 per 10,000 tons or 2 per project whichever is greater
Dust proportion	SP-2 Asphalt Mixture Volumetrics	
Density of core	California Test 375	2 per paving day
Nuclear gauge density	California Test 375	3 per 250 tons or 3 per paving day, whichever is greater
Hamburg wheel track	AASHTO T 324 (Modified)	1 per 10,000 tons or 1 per project, whichever is greater
Moisture susceptibility	AASHTO T 283	

39-3.01D(4) Reserved

39-3.01D(5) Department Acceptance

39-3.01D(5)(a) General

The Department accepts RHMA-G based on compliance with:

1. Aggregate quality requirements shown in the following table:

Aggregate Quality

Quality characteristic	Test method	Requirement
Aggregate gradation	AASHTO T 27	JMF ± Tolerance
Percent of crushed particles Coarse aggregate (min, %) One-fractured face Two-fractured faces Fine aggregate (min, %) (Passing No. 4 sieve and retained on No. 8 sieve.) One fractured face	AASHTO T 335	 -- 90 70
Los Angeles Rattler (max, %) Loss at 100 Rev. Loss at 500 Rev.	AASHTO T 96	 12 40
Sand equivalent (min)[a, b]	AASHTO T 176	47
Flat and elongated particles (max, % by weight at 5:1)	ASTM D4791	Report only
Fine aggregate angularity (min, %)[c]	AASHTO T 304 Method A	45

[a]Reported value must be the average of 3 tests from a single sample.
[b]Use of a sand reading Indicator is required as shown in AASHTO T 176, Figure 1. Sections 4.7, 4.8, 7.1.2, 8.4.2 and 8.4.3 do not apply.
[c] The Engineer waives this specification if RHMA-G contains 10 percent or less of nonmanufactured sand by weight of total aggregate. Manufactured sand is fine aggregate produced by crushing rock or gravel.

2. In-place RHMA-G quality requirements shown in the following table:

DocuSign Envelope ID: 894511EA-295B-49EB-A393-D26A6837FDD4

RHMA-G In-Place Acceptance

Quality characteristic	Test method	Requirement
Asphalt binder content (%)	AASHTO T 308 Method A	JMF -0.4, +0.5
HMA moisture content (max, %)	AASHTO T 329	1
Air voids content @ N_{design} (%)[a, b]	AASHTO T 269	4.0 ± 1.5
Voids in mineral aggregate on laboratory-produced HMA[d] (min, %) Gradation: 1/2-inch and 3/4-inch	SP-2 Asphalt Mixture Volumetrics[c]	18.0–23.0
Voids in mineral aggregate on plant-produced HMA (min, %)[a] Gradation: 1/2-inch and 3/4-inch	SP-2 Asphalt Mixture Volumetrics[c]	18.0–23.0
Dust proportion[a]	SP-2 Asphalt Mixture Volumetrics	Report only
Density of core (% of max theoretical density)[e, f]	California Test 375	91–97
Hamburg wheel track (min number of passes at 0.5-inch rut depth) Binder grade: PG 58 PG 64 PG 70	AASHTO T 324 (Modified)	 15,000 20,000 25,000
Hamburg wheel track (min number of passes at inflection point) Binder grade: PG 58 PG 64 PG 70	AASHTO T 324 (Modified)	 10,000 12,500 15,000
Moisture susceptibility (min, psi, dry strength)	AASHTO T 283	100
Moisture susceptibility (min, psi, wet strength)	AASHTO T 283	70

[a]Prepare 3 briquettes. Report the average of 3 tests.
[b]The Engineer determines the bulk specific gravity of each lab-compacted briquette under AASHTO T 275, Method A, and theoretical maximum specific gravity under AASHTO T 209, Method A.
[c]Determine bulk specific gravity under AASHTO T 275, Method A.
[d]The Engineer determines the laboratory-prepared RHMA-G value for mix design verification only.
[e]The Engineer determines percent of theoretical maximum density under California Test 375 except the Engineer uses:

1. AASHTO T 275, Method A, to determine in-place density of each density core instead of using the nuclear gauge
2. AASHTO T 209, Method A to determine theoretical maximum density instead of calculating test maximum density.

[f]The Engineer determines theoretical maximum density under AASHTO T 209, Method A, at the frequency specified in California Test 375, Part 5. D.

39-3.01D(5)(b) Asphalt Rubber Binder

39-3.01D(5)(b)(i) General

The Department does not use asphalt rubber binder design profile for production acceptance.

39-3.01D(5)(b)(ii) Asphalt Modifier

The Department accepts asphalt modifier based on compliance with the requirements shown in the following table:

DocuSign Envelope ID: 894511EA-295B-49EB-A393-D26A6837FDD4

Asphalt Modifier for Asphalt Rubber Binder

Quality characteristic	Test method	Requirement
Viscosity at 100 °C ($m^2/s \times 10^{-6}$)	ASTM D445	X ± 3[a]
Flash point (min, °C)	ASTM D92	207
Molecular Analysis		
Asphaltenes (max, % by mass (max)	ASTM D2007	0.1
Aromatics (min % by mass)	ASTM D2007	55

[a]The symbol "X" is the asphalt modifier viscosity.

39-3.01D(5)(b)(iii) Crumb Rubber Modifier

The Department accepts scrap tire CRM and high natural CRM based on compliance with the requirements shown in the following table:

Crumb Rubber Modifier for Asphalt Rubber Binder

Quality characteristic	Test method	Requirement
Scrap tire CRM gradation (% passing No. 8 sieve)	California Test 385	100
High natural CRM gradation (% passing No. 10 sieve)	California Test 385	100
Wire in CRM (max, %)	California Test 385	0.01
Fabric in CRM (max, %)	California Test 385	0.05
CRM particle length (max, in)	--	3/16
CRM specific gravity	California Test 208	1.1–1.2

Scrap tire CRM and high natural CRM are sampled and tested separately.

39-3.01D(5)(b)(iv) Asphalt Rubber Binder

10-17-14

For Department acceptance testing, take samples in the Engineer's presence of asphalt rubber binder in 6 qt cans with open tops and friction lids. Take samples once per day or every 5 lots, whichever is greater.

The Department accepts asphalt rubber binder based on compliance with the requirements shown in the following table:

Quality characteristic	Test method	Requirement
Cone penetration at 25 °C (0.10 mm)	ASTM D217	25–70
Resilience at 25 °C (min, % rebound)	ASTM D5329	18
Softening point (°C)	ASTM D36	52–74
Viscosity at 190 °C (centipoises)[a]	ASTM D7741	1,500–4,000

[a]Prepare sample for viscosity test under California Test 388.

04-18-14

39-3.01D(5)(c)–39-3.01D(5)(f) Reserved

39-3.02 MATERIALS

39-3.02A General

Reserved

DocuSign Envelope ID: 894511EA-295B-49EB-A393-D26A6837FDD4

39-3.02B Mix Design

For RHMA-G, the mix design must comply with the requirements shown in the following table:

RHMA-G Mix Design Requirements

Quality characteristic	Test method	Requirement
Air voids content (%)	AASHTO T 269[a]	N_{design} = 4.0
Gyration compaction (no. of gyrations	AASHTO T 312	N_{design} = 50–150[b]
Voids in mineral aggregate (min, %)	SP-2 Asphalt Mixture Volumetrics[c]	18.0–23.0
Dust proportion	SP-2 Asphalt Mixture Volumetrics	Report only
Hamburg wheel track (min number of passes at 0.5-inch rut depth)	AASHTO T 324 (Modified)[d]	
Binder grade:		
PG 58		15,000
PG 64		20,000
PG 70		25,000
Hamburg wheel track (min number of passes at the inflection point)	AASHTO T 324 (Modified)[d]	
Binder grade:		
PG 58		10,000
PG 64		10,000
PG 70		12,500
Moisture susceptibility, dry strength (min, psi)	AASHTO T 283[d]	100
Moisture susceptibility, wet strength (min, psi)	AASHTO T 283[d, e]	70

[a]Calculate the air voids content of each specimen using AASHTO T 275, Method A, to determine bulk specific gravity and AASHTO T 209, Method A, to determine theoretical maximum specific gravity. Under AASHTO T 209 use a digital manometer and pycnometer when performing AASHTO T 209.
[b]Superpave gyratory compactor ram pressure may be increased to a maximum of 825kPa, and specimens may be held at a constant height for a maximum of 90 minutes.
[c]Measure bulk specific gravity using AASHTO T 275, Method A.
[d]Test plant produced RHMA.
[e]Freeze thaw required.

Determine the amount of asphalt rubber binder to be mixed with the aggregate for RHMA-G as follows:

1. Base the calculations on the average of 3 briquettes produced at each asphalt rubber binder content.
2. Plot asphalt rubber binder content versus average air voids content for each set of 3 specimens and connect adjacent points with a best-fit curve.
3. Calculate voids in mineral aggregate for each specimen, average each set, and plot the average versus asphalt rubber binder content.
4. Calculate the dust proportion and plot versus asphalt rubber binder content.
5. From the curve plotted, select the theoretical asphalt rubber binder content at 4 percent air voids.
6. At the selected asphalt rubber binder content, calculate dust proportion.
7. Record the asphalt rubber binder content in the Contractor Hot Mix Asphalt Design Data Form as the OBC.

The OBC must not fall below 7.5 percent by total weight of the mix.

DocuSign Envelope ID: 894511EA-295B-49EB-A393-D26A6837FDD4

Laboratory mixing and compaction must comply with AASHTO R 35, except the mixing temperature of the aggregate must be between 300 and 325 degrees F. The mixing temperature of the asphalt rubber binder must be between 375 and 425 degrees F. The compaction temperature of the combined mixture must be between 290 and 320 degrees F.

39-3.02C Asphalt Rubber Binder

39-3.02C(1) General

Asphalt rubber binder must be a combination of:

1. Asphalt binder
2. Asphalt modifier
3. CRM

The combined asphalt binder and asphalt modifier must be 80.0 ± 2.0 percent by weight of the asphalt rubber binder.

39-3.02C(2) Asphalt Modifier

Asphalt modifier must be a resinous, high flash point, and aromatic hydrocarbon, and must comply with the requirements shown in the following table:

Asphalt Modifier for Asphalt Rubber Binder

Quality characteristic	Test method	Requirement
Viscosity at 100 °C ($m^2/s \times 10^{-6}$)	ASTM D445	X ± 3[a]
Flash point (min, °C)	ASTM D92	207
Molecular Analysis		
Asphaltenes (max, % by mass)	ASTM D2007	0.1
Aromatics (min, % by mass)	ASTM D2007	55

[a]The symbol "X" is the proposed asphalt modifier viscosity. "X" must be between 19 and 36. A change in "X" requires a new asphalt rubber binder design.

Asphalt modifier must be from 2.0 to 6.0 percent by weight of the asphalt binder in the asphalt rubber binder.

39-3.02C(3) Crumb Rubber Modifier

CRM must be a ground or granulated combination of scrap tire CRM and high natural CRM. CRM must be 75.0 ± 2.0 percent scrap tire CRM and 25.0 ± 2.0 percent high natural CRM by total weight of CRM. Scrap tire CRM must be from any combination of automobile tires, truck tires, or tire buffings.

The CRM must comply with the requirements shown in the following table:

Crumb Rubber Modifier for Asphalt Rubber Binder

Quality characteristic	Test method	Requirement
Scrap tire CRM gradation (% passing No. 8 sieve)	California Test 385	100
High natural CRM gradation (% passing No. 10 sieve)	California Test 385	100
Wire in CRM (max, %)	California Test 385	0.01
Fabric in CRM (max, %)	California Test 385	0.05
CRM particle length (max, in)[a]	--	3/16
CRM specific gravity	California Test 208	1.1–1.2
Natural rubber content in high natural CRM (%)	ASTM D297	40.0–48.0

[a]Test at mix design and for certificate of compliance.

CRM must be ground or granulated at ambient temperature. If steel and fiber are cryogenically separated, separation must occur before grinding or granulating. Cryogenically produced CRM particles must be ground or granulated and not pass through the grinder or granulator.

DocuSign Envelope ID: 894511EA-295B-49EB-A393-D26A6837FDD4

CRM must be dry, free-flowing particles that do not stick together. CRM must not cause foaming when combined with the asphalt binder and asphalt modifier. You may add calcium carbonate or talc up to 3 percent by weight of CRM.

39-3.02C(4) Design and Profile

Design the asphalt rubber binder from testing you perform for each quality characteristic and for the reaction temperatures expected during production. The profile must include the same component sources for the asphalt rubber binder used. The 24-hour (1,440-minute) interaction period determines the design profile. At a minimum, mix asphalt rubber binder components, take samples, and perform and record the tests shown in the following table:

Asphalt Rubber Binder Reaction Design Profile

Quality characteristic	Test Method	Minutes of reaction [a]							Limits
		45	60	90	120	240	360	1440	
Cone penetration at 25 °C (0.10 mm)	ASTM D217	X [b]				X		X	25–70
Resilience at 25 °C (min, % rebound)	ASTM D5329	X				X		X	18
Field softening point (°C)	ASTM D36	X				X		X	52–74
Viscosity (centipoises)	ASTM D7741	X	X	X	X	X	X	X	1,500–4,000

[a]Six hours (360 minutes) after CRM addition, reduce the oven temperature to 275 °F for 16 hours. After the 16-hour (960 minutes) cool down after CRM addition, reheat the binder to the reaction temperature expected during production for sampling and testing at 24 hours (1,440 minutes).
[b]"X" denotes required testing

39-3.02C(5) Asphalt Rubber Binder Production

39-3.02C(5)(a) General

Deliver scrap tire CRM and high natural CRM in separate bags.

39-3.02C(5)(b) Mixing

Proportion and mix asphalt binder, asphalt modifier, and CRM simultaneously or premix the asphalt binder and asphalt modifier before adding CRM. If you premix asphalt binder and asphalt modifier, mix them for at least 20 minutes. When you add CRM, the asphalt binder and asphalt modifier must be from 375 to 440 degrees F.

After interacting for at least 45 minutes, the quality characteristics of asphalt rubber binder must comply with the requirements shown in the following table:

10-17-14

Quality characteristic	Test method	Requirement
Cone penetration at 25 °C (0.10 mm)	ASTM D217	25–70
Resilience at 25 °C (min, % rebound)	ASTM D5329	18
Softening point (°C)	ASTM D36	52–74
Viscosity at 190 °C (centipoises)[a]	ASTM D7741	1,500–4,000

[a]Prepare sample for viscosity test under California Test 388.

04-18-14

Do not use asphalt rubber binder during the first 45 minutes of the reaction period. During this period, the asphalt rubber binder mixture must be between 375 degrees F and the lower of 425 or 25 degrees F below the asphalt binder's flash point indicated in the MSDS.

If any asphalt rubber binder is not used within 4 hours after the reaction period, discontinue heating. If the asphalt rubber binder drops below 375 degrees F, reheat before use. If you add more scrap tire CRM to the reheated asphalt rubber binder, the binder must undergo a 45-minute reaction

DocuSign Envelope ID: 894511EA-295B-49EB-A393-D26A6837FDD4

period. The added scrap tire CRM must not exceed 10 percent of the total asphalt rubber binder weight. Reheated and reacted asphalt rubber binder must comply with the viscosity specifications. Do not reheat asphalt rubber binder more than twice.

39-3.02D Aggregates

39-3.02D(1) General

For RHMA-G, before the addition of asphalt binder and lime treatment, the aggregate must comply with the requirements shown in the following table:

Aggregate Quality

Quality characteristic	Test method	Requirement
Percent of crushed particles Coarse aggregate (min, %) One-fractured face Two-fractured faces Fine aggregate (min, %) (Passing No. 4 sieve and retained on No. 8 sieve.) One fractured face	AASHTO T 335	 -- 90 70
Los Angeles Rattler (max, %) Loss at 100 Rev. Loss at 500 Rev.	AASHTO T 96	 12 40
Sand equivalent (min)[a, b]	AASHTO T 176	47
Flat and elongated particles (max, % by weight at 5:1)	ASTM D4791	Report only
Fine aggregate angularity (min, %)[c]	AASHTO T 304 Method A	45

[a]Reported value must be the average of 3 tests from a single sample.
[b]Use of a sand reading indicator is required as shown in AASHTO T 176, Figure 1. Sections 4.7, 4.8, 7.1.2, 8.4.2 and 8.4.3 do not apply.
[c] The Engineer waives this specification if HMA contains 10 percent or less of nonmanufactured sand by weight of total aggregate, except if your JMF fails verification. Manufactured sand is fine aggregate produced by crushing rock or gravel.

39-3.02D(2) Aggregate Gradations

The aggregate gradations for RHMA-G must comply with the requirements shown in the following table:

10-17-14

Aggregate Gradation Requirements

Type A HMA pavement thickness shown	Gradation
0.10 to less than 0.20 foot	1/2 inch
0.20 foot or greater	3/4 inch

04-18-14

For RHMA-G, the aggregate gradations must be within the target value limits for the specified sieve size shown in the following tables:

DocuSign Envelope ID: 894511EA-295B-49EB-A393-D26A6837FDD4

Aggregate Gradation
(Percentage Passing)
Rubberized Hot Mix Asphalt - Gap Graded (RHMA-G)

3/4-inch RHMA-G

Sieve Sizes	Target Value Limits	Allowable Tolerance
1"	100	--
3/4"	95–98	TV ± 5
1/2"	83–87	TV ± 6
3/8"	65–70	TV ± 5
No. 4	28–42	TV ± 6
No. 8	14–22	TV ± 5
No. 200	0–6	TV ± 2

1/2-inch RHMA-G

Sieve Sizes	Target Value Limits	Allowable Tolerance
3/4"	100	--
1/2"	90–98	TV ± 6
3/8"	83–87	TV ± 5
No. 4	28–42	TV ± 6
No. 8	14–22	TV ± 5
No. 200	0–6	TV ± 2

39-3.02E Rubberized Hot Mix Asphalt Production

Asphalt rubber binder must be from 375 to 425 degrees F when mixed with aggregate.
If the dry and wet moisture susceptibility test result for treated plant-produced RHMA-G is less than the RHMA-G mix design requirement for dry and wet moisture susceptibility strength, the minimum dry and wet strength requirement is waived, but you must use one of the following treatments:

1. Aggregate lime treatment using the slurry method
2. Aggregate lime treatment using the dry lime method
3. Liquid antistrip treatment of HMA

39-3.03 CONSTRUCTION

Use a material transfer vehicle when placing RHMA-G.
Do not use a pneumatic tired roller to compact RHMA-G.

10-17-14

Spread and compact RHMA-G at an atmospheric temperature of at least 55 degrees F and a surface temperature of at least 60 degrees F.
If the atmospheric temperature is below 70 degrees F, cover loads in trucks with tarps. The tarps must completely cover the exposed load until you transfer the mixture to the paver's hopper or to the pavement surface. Tarps are not required if the time from discharge to truck until transfer to the paver's hopper or the pavement surface is less than 30 minutes.
For RHMA-G placed under method compaction:

1. Complete the 1st coverage of breakdown compaction before the surface temperature drops below 285 degrees F.
2. Complete breakdown and intermediate compaction before the surface temperature drops below 250 degrees F. Use a static steel-tired roller instead of the pneumatic-tired roller for intermediate compaction.
3. Complete finish compaction before the surface temperature drops below 200 degrees F.

DocuSign Envelope ID: 894511EA-295B-49EB-A393-D26A6837FDD4

Spread sand at a rate between 1 and 2 lb/sq yd on new RHMA-G pavement when finish rolling is complete. Sand must be free of clay or organic matter. Sand must comply with section 90-1.02C(3). Keep traffic off the pavement until spreading sand is complete.

39-3.04 PAYMENT

Not Used

39-4 OPEN GRADED FRICTION COURSES

39-4.01 GENERAL

39-4.01A Summary

Section 39-4 includes specifications for producing and placing open graded friction courses. Open graded friction courses include HMA-O, RHMA-O, and RHMA-O-HB.

You may produce OGFC using a warm mix asphalt technology.

39-4.01B Definitions

Reserved

39-4.01C Submittals

Submit a complete JMF, except do not specify an asphalt binder content.

39-4.01D Quality Control and Assurance

39-4.01D(1) General

Reserved

39-4.01D(2) Quality Control

39-4.01D(2)(a) General

Reserved

39-4.01D(2)(b) Asphalt Rubber Binder

For RHMA-O and RHMA-O-HB, the asphalt rubber binder must comply with the specifications in 39-3.01D(2)(b).

39-4.01D(2)(c) Aggregate

Test the quality characteristics of aggregate under the test methods and frequencies shown in the following table:

Aggregate Testing Frequencies

Quality characteristic	Test method	Minimum testing frequency
Gradation	AASHTO T 27	1 per 750 tons and any remaining part
Moisture content[a]	AASHTO T 329	1 per 1500 tons and any remaining part
Crushed particles	AASHTO T 335	1 per 10,000 tons or 2 per project, whichever is greater
Los Angeles rattler	AASHTO T 96	
Flat and elongated particles	ASTM D4791	

[a]Test at continuous mixing plants only

For lime treated aggregate, test aggregate before treatment and test for gradation and moisture content during OGFC production.

39-4.01D(2)(d) Hot Mix Asphalt Production

Test the quality characteristics of OGFC under the test methods and frequencies shown in the following table:

DocuSign Envelope ID: 894511EA-295B-49EB-A393-D26A6837FDD4

OGFC Testing Frequencies

Quality characteristic	Test method	Minimum testing frequency
Asphalt binder content	AASHTO T 308 Method A	1 per 750 tons and any remaining part
HMA moisture content	AASHTO T 329	1 per 2,500 tons but not less than 1 per paving day

39-4.01D(3) Department Acceptance

39-4.01D(3)(a) General

The Department accepts OGFC based on compliance with:

1. Aggregate quality requirements shown in the following table:

Aggregate Quality

Quality characteristic	Test method	Requirement
Aggregate gradation	AASHTO T 27	JMF ± Tolerance
Percent of crushed particles Coarse aggregate (min, %) One-fractured face Two-fractured faces Fine aggregate (min, %) (Passing No. 4 sieve and retained on No. 8 sieve.) One fractured face	AASHTO T 335	 90 90 90
Los Angeles Rattler (max, %) Loss at 100 Rev. Loss at 500 Rev.	AASHTO T 96	 12 40
Flat and elongated particles (max, % by weight @ 5:1)	ASTM D4791	Report only

2. In-place OGFC quality requirements shown in the following table:

OGFC Acceptance In Place

Quality characteristic	Test method	Requirement
Asphalt binder content (%)	AASHTO T 308 Method A	JMF -0.4, +0.5
HMA moisture content (max, %)	AASHTO T 329	1

39-4.01D(3)(b) Asphalt Rubber Binder

The Department accepts asphalt rubber binder in RHMA-O and RHMA-O-HB under 39-3.01D(5)(b).

39-4.01D(3)(c) Pavement Smoothness

Pavement smoothness of OGFC must comply with the Mean Roughness Index requirements shown in the following table for a 0.1 mile section:

OGFC Pavement Smoothness Acceptance Criteria

OGFC placement on	Mean Roughness Index requirement
New construction or HMA overlay	60 in/mi or less
Existing pavement	75 in/mi or less
Milled surface	75 in/mi or less

DocuSign Envelope ID: 894511EA-295B-49EB-A393-D26A6837FDD4

39-4.01D(3)(d)–39-4.01D(3)(f) Reserved

39-4.02 MATERIALS

39-4.02A General

When mixed with asphalt binder, aggregate must not be more than 325 degrees F except aggregate for OGFC with unmodified asphalt binder must be not more than 275 degrees F.

39-4.02B Mix Design

The Department determines the asphalt binder content under California Test 368 within 20 days of your complete JMF submittal and provides you a Caltrans Hot Mix Asphalt Verification form. For OGFC, the 1st paragraph of section 39-1.02B(1) does not apply.

39-4.02C Asphalt Binder

Asphalt rubber binder in RHMA-O and RHMA-O-HB must comply with section 39-3.02B.

39-4.02D Aggregate

39-4.02D(1) General

Aggregate must comply with the requirements shown in the following table:

Aggregate Quality

Quality characteristic	Test method	Requirement
Percent of crushed particles Coarse aggregate (min, %) One-fractured face Two-fractured faces Fine aggregate (min, %) (Passing No. 4 sieve and retained on No. 8 sieve.) One fractured face	AASHTO T 335	 -- 90 90
Los Angeles Rattler (max, %) Loss at 100 Rev. Loss at 500 Rev.	AASHTO T 96	 12 40
Flat and elongated particles (max, % by weight at 5:1)	ASTM D4791	Report only

39-4.02D(2) Aggregate Gradations

10-17-14

The aggregate gradations for HMA-O must comply with the requirements shown in the following table:

Aggregate Gradation Requirements

HMA-O pavement thickness shown	Gradation
0.10 foot or greater to less than 0.15 foot	1/2 inch
0.15 foot or greater	1 inch

The aggregate gradations for RHMA-O and RHMA-O-HB must comply with the requirements shown in the following table:

Aggregate Gradation Requirements

RHMA-O and RHMA-O-HB pavement thickness shown	Gradation
0.10 foot or greater	1/2 inch

04-18-14

For RHMA-O and RHMA-O-HB, the 1-inch aggregate gradation is not allowed.

DocuSign Envelope ID: 894511EA-295B-49EB-A393-D26A6837FDD4

For OGFC, the aggregate gradations must be within the target value limits for the specified sieve size shown in the following tables:

Aggregate Gradations
(Percentage Passing)
Open Graded Friction Course (OGFC)

1-inch OGFC

Sieve size	Target value limit	Allowable tolerance
1 1/2"	100	--
1"	99–100	TV ± 5
3/4"	85–96	TV ± 5
1/2"	55–71	TV ± 6
No. 4	10–25	TV ± 7
No. 8	6–16	TV ± 5
No. 200	0–6	TV ± 2

1/2-inch OGFC

Sieve size	Target value limit	Allowable tolerance
3/4"	100	--
1/2"	95–100	TV ± 6
3/8"	78–89	TV ± 6
No. 4	28–37	TV ± 7
No. 8	7–18	TV ± 5
No. 30	0–10	TV ± 4
No. 200	0–3	TV ± 2

If lime treatment is required, you may reduce the lime ratio for the combined aggregate from 1.0 to 0.5 percent for OGFC.

39-4.03 CONSTRUCTION

Use a material transfer vehicle when placing OGFC.

If the atmospheric temperature is below 70 degrees F, cover loads in trucks with tarps. The tarps must completely cover the exposed load until you transfer the mixture to the paver's hopper or to the pavement surface. Tarps are not required if the time from discharge to truck until transfer to the paver's hopper or the pavement surface is less than 30 minutes.

Apply a tack coat before placing OGFC. The tack coat application rate must comply with the requirements of the following table:

Tack Coat Application Rates for OGFC

OGFC over:	Minimum Residual Rates (gal/sq yd)		
	CSS1/CSS1h, SS1/SS1h and QS1h/CQS1h Asphaltic Emulsion	CRS1/CRS2, RS1/RS2 and QS1/CQS1 Asphaltic Emulsion	Asphalt Binder and PMRS2/PMCRS2 and PMRS2h/PMCRS2h Asphaltic Emulsion
New HMA	0.03	0.04	0.03
PCC and existing AC surfacing	0.05	0.06	0.04
Planed pavement	0.06	0.07	0.05

Compact OGFC with steel-tired, 2-axle tandem rollers. If placing over 300 tons of OGFC per hour, use at least 3 rollers for each paver. If placing less than 300 tons of OGFC per hour, use at least 2 rollers for each paver. Each roller must weigh between 126 to 172 lb per linear inch of drum width. Turn the vibrator off.

DocuSign Envelope ID: 894511EA-295B-49EB-A393-D26A6837FDD4

Compact OGFC with 2 coverages. The Engineer may order fewer coverages if the layer thickness of OGFC is less than 0.20 foot.
For HMA-O with unmodified asphalt binder:

1. Spread and compact only if the atmospheric temperature is at least 55 degrees F and the surface temperature is at least 60 degrees F.
2. Complete the 1st coverage using 2 rollers before the surface temperature drops below 240 degrees F.
3. Complete all compaction before the surface temperature drops below 200 degrees F.

For HMA-O with modified asphalt binder except asphalt rubber binder:

1. Spread and compact only if the atmospheric temperature is at least 50 degrees F and the surface temperature is at least 50 degrees F.
2. Complete the 1st coverage using 2 rollers before the surface temperature drops below 240 degrees F.
3. Complete all compaction before the surface temperature drops below 180 degrees F.

For RHMA-O and RHMA-O-HB:

1. Spread and compact only if the atmospheric temperature is at least 55 degrees F and surface temperature is at least 60 degrees F.
2 Complete the 1st coverage using 2 rollers before the surface temperature drops below 280 degrees F.
3. Complete compaction before the surface temperature drops below 250 degrees F.

Spread sand at a rate between 1 and 2 lb/sq yd on new RHMA-O and RHMA-O-HB pavement when finish rolling is complete. Sand must be free of clay or organic matter. Sand must comply with section 90-1.02C(3). Keep traffic off the pavement until spreading sand is complete.
If you choose to correct OGFC for smoothness, the Engineer determines if the corrective method causes raveling. OGFC that is raveling must be removed and replaced.

39-4.04 PAYMENT

Not Used

39-5 BONDED WEARING COURSES

39-5.01 GENERAL

39-5.01A General

39-5.01A(1) Summary

Section 39-5 includes specifications for producing and placing bonded wearing courses.
BWC includes placing a polymer modified asphaltic emulsion and the specified HMA in a single pass with an integrated paving machine.
BWC using RHMA-G, RHMA-O, or HMA-O must comply with the specifications for RHMA-G, RHMA-O, or HMA-O.

39-5.01A(2) Definitions

Reserved

39-5.01A(3) Submittals

With your JMF submittal, include:

1. Asphaltic emulsion membrane target residual rate
2. Weight ratio of water to bituminous material in the original asphaltic emulsion

Within 3 business days following the 1st job site delivery, submit test results for asphaltic emulsion properties performed on a sample taken from the asphaltic emulsion delivered.

DocuSign Envelope ID: 894511EA-295B-49EB-A393-D26A6837FDD4

Within 1 business day of each job site delivery of asphaltic emulsion, submit to METS a 2-quart sample and a certificate of compliance. Ship each sample so that it is received at METS within 48 hours of sampling.

Each day BWC is placed, submit the residual and application rate for the asphaltic emulsion membrane.

During production, submit certified volume or weight slips for the materials supplied.

39-5.01A(4) Quality Control and Assurance

39-5.01A(4)(a) General

For each job site delivery of asphaltic emulsion, take a 2-quart sample in the presence of the Engineer. Take samples from the delivery truck at mid-load from a sampling tap or thief. If the sample is taken from the tap, draw and discard 4 quarts before sampling.

If you unload asphalt binder or asphaltic emulsion into a bulk storage tank, do not use material from the tank until you submit test results for a sample taken from the bulk storage tank. Testing must be performed by an AASHTO-accredited laboratory.

39-5.01A(4)(b) Quality Control

Sample BWC in two 1-gallon metal containers.

The asphaltic emulsion membrane must be tested under ASTM D2995 at least once per paving day at the job site.

39-5.01A(4)(c) Department Acceptance

The Department accepts asphaltic emulsion membrane based on compliance with the requirements shown in the following table:

10-17-14

Asphaltic Emulsion Membrane

Quality characteristic	Test method	Requirement
Saybolt Furol Viscosity at 25 °C (SFS) [a]	AASHTO T 59	20–100
Sieve test on original emulsion at time of delivery (max, %)	AASHTO T 59	0.05
24-hour storage stability (max, %)	AASHTO T 59	1
Residue by evaporation (min, %)	California Test 331	63
Tests on residue from evaporation test:		
Torsional recovery, measure entire arc of recovery at 25 °C (min, %)	California Test 332	40
Penetration at 25 °C (0.01 mm)	AASHTO T 49	70–150

[a]SFS means Saybolt Furol seconds

04-18-14

The Department accepts the BWC based on the submitted asphaltic emulsion membrane target residual rate ±0.02 gal/sq yd when tested under ASTM D2995.

39-5.01B Materials

39-5.01B(1) General

Reserved

39-5.01B(2) Asphaltic Emulsion Membrane

The asphaltic emulsion membrane must comply with the requirements shown in the following table:

DocuSign Envelope ID: 894511EA-295B-49EB-A393-D26A6837FDD4

10-17-14

Asphaltic Emulsion Membrane

Quality characteristic	Test method	Requirement
Saybolt Furol Viscosity at 25 °C (SFS) [a]	AASHTO T 59	20–100
Sieve test on original emulsion at time of delivery (max, %)	AASHTO T 59	0.05
24-hour storage stability (max, %)	AASHTO T 59	1
Residue by evaporation (min, %)	California Test 331	63
Tests on residue from evaporation test:		
Torsional recovery, measure entire arc of recovery at 25 °C (min, %)	California Test 332	40
Penetration at 25 °C (0.01 mm)	AASHTO T 49	70–150

[a] SFS means Saybolt Furol seconds

04-18-14

39-5.01B(3) Reserved

39-5.01C Construction

39-5.01C(1) General

Use method compaction for BWC.
Do not dilute the asphaltic emulsion.
Do not place BWC if rain is forecast for the project area within 24 hours by the National Weather Service.

39-5.01C(2) Spreading and Compacting Equipment

Use a material transfer vehicle when placing BWC.
Use an integrated distributor paver capable of spraying the asphaltic emulsion membrane, spreading the HMA, and leveling the mat surface in 1 pass.
Apply asphaltic emulsion membrane at a uniform rate for the full paving width. The asphaltic emulsion membrane must not be touched by any part of the paver including wheels or tracks.
If the spray bar is adjusted for changing pavement widths, the paver must prevent excess spraying of asphaltic emulsion beyond 2 inches of the HMA edge.

39-5.01C(3) Applying Asphaltic Emulsion

10-17-14

Before spreading HMA, apply asphaltic emulsion membrane on dry or damp pavement with no free water.

04-18-14

Apply emulsion at a temperature from 120 to 180 degrees F and in a single application at the residual rate specified for the condition of the underlying surface. Asphaltic emulsion membrane must have a target residual rate for the surfaces to receive the emulsion as shown in the following table:

Asphaltic Emulsion Membrane Target Residual Rate

Surface to receive asphaltic emulsion membrane	Target residual rates (gal/sq yd)
PCC pavement	0.09–0.11
Dense, compacted, new HMA pavement	0.11–0.14
Open textured, dry, aged or oxidized existing AC pavement	0.13–0.17

If requested and authorized, you may change the asphaltic emulsion membrane application rates.

DocuSign Envelope ID: 894511EA-295B-49EB-A393-D26A6837FDD4

39-5.01C(4) Placing and Compacting Hot Mix Asphalt

Construct a transverse joint if the HMA remains in the paver for more than 30 minutes.
Do not reintroduce HMA spread over asphaltic emulsion membrane into the paving process.
Do not overlap or hot lap HMA. Pave through lanes after paving adjacent:

1. Shoulders
2. Tapers
3. Transitions
4. Road connections
5. Driveways
6. Curve widenings
7. Chain control lanes
8. Turnouts
9. Turn pockets
10. Ramps

For BWC placed on areas adjacent to through lanes that extend into the through lanes, cut the BWC to a neat, straight vertical line at the lane line.
If you spill asphaltic emulsion into the paver hopper, stop paving and remove the contaminated material.

39-5.01D Payment

Not Used

39-5.02 BONDED WEARING COURSES-GAP GRADED

39-5.02A General

39-5.02A(1) Summary

Section 39-5.02 includes specifications for producing bonded wearing course-gap graded.

39-5.02A(2) Definitions

Reserved

39-5.02A(3) Submittals

Include film thickness and calculations and AASHTO T 305 results with your JMF submittal.

39-5.02A(4) Quality Control and Assurance

39-5.02A(4)(a) General

Reserved

39-5.02A(4)(b) Quality Control

39-5.02A(4)(b)(i) General

Reserved

39-5.02A(4)(b)(ii) Aggregate

Test the quality characteristics of aggregate under the test methods and frequencies shown in the following table:

DocuSign Envelope ID: 894511EA-295B-49EB-A393-D26A6837FDD4

Aggregate Testing Frequencies

Quality characteristic	Test method	Minimum testing frequency
Gradation	AASHTO T 27	1 per 750 tons and any remaining part
Sand equivalent[a, b]	AASHTO T 176	
Moisture content[c]	AASHTO T 329	1 per 1500 tons and any remaining part
Crushed particles	AASHTO T 335	1 per 10,000 tons or 2 per project, whichever is greater
Los Angeles rattler	AASHTO T 96	
Flat and elongated particles	ASTM D4791	
Fine aggregate angularity	AASHTO T 304 Method A	

[a]Reported value must be the average of 3 tests from a single sample.
[b]Use of a sand reading indicator is required as shown in AASHTO T 176, Figure 1. Sections 4.7, 4.8, 7.1.2, 8.4.2, and 8.4.3 do not apply.
[c]Test at continuous mixing plants only.

For lime treated aggregate, test aggregate before treatment and test for gradation and moisture content during BWC-G production.

39-5.02A(4)(b)(iii) Hot Mix Asphalt Production

Sample BWC in two 1-gallon metal containers.

Test the quality characteristics of BWC-G under the test methods and frequencies shown in the following table:

BWC-G Testing Frequencies

Quality characteristic	Test method	Minimum testing frequency
Asphalt binder content	AASHTO T 308 Method A	1 per 750 tons and any remaining part
HMA moisture content	AASHTO T 329	1 per 2,500 tons but not less than 1 per paving day

39-5.02A(4)(b)(iv)–39-5.02A(4)(b)(vii) Reserved

39-5.02A(4)(c) Department Acceptance

The Department accepts BWC-G based on compliance with:

1. Asphalt binder content at JMF -0.4, +0.5 percent when tested under AASHTO T 308, Method A.
2. Aggregate quality requirements shown in the following table:

DocuSign Envelope ID: 894511EA-295B-49EB-A393-D26A6837FDD4

Aggregate Quality

Quality characteristic	Test method	Requirement
Aggregate gradation	AASHTO T 27	JMF ± Tolerance
Percent of crushed particles Coarse aggregate (min, %) One-fractured face Two-fractured faces Fine aggregate (min, %) (Passing No. 4 sieve and retained on No. 8 sieve.) One fractured face	AASHTO T 335	 -- 90 85
Los Angeles Rattler (max, %) Loss at 100 Rev. Loss at 500 Rev.	AASHTO T 96	 12 35
Sand equivalent (min)	AASHTO T 176	47
Flat and elongated particles (max, % by weight at 5:1)	ASTM D4791	25
Fine aggregate angularity (min, %)	AASHTO T 304 Method A	45

[a]Reported value must be the average of 3 tests from a single sample.
[b]Use of a sand reading indicator is required as shown in AASHTO T 176, Figure 1. Sections 4.7, 4.8, 7.1.2, 8.4.2 and 8.4.3 do not apply.

39-5.02B Materials

39-5.02B(1) General

Reserved

39-5.02B(2) Mix Design

For BWC-G, the 1st paragraph of section 39-1.02B(1) does not apply.
Determine the proposed OBC from a mix design that complies with the requirements shown in the following table:

Hot Mix Asphalt Mix Design Requirements

Quality characteristic	Test method	Requirement
Film thickness (min, μm)	Asphalt Institute MS-2 Table 6.1 [a]	12
Drain down (max, %)	AASHTO T 305 [b]	0.1

[a] Film thickness is calculated based on the effective asphalt content and determined as follows:

$$FT = \left(\frac{P_{be}}{SA \times G_b \times 1000} \right) 10^6$$

Where:

FT = Film thickness in μm
P_{be} = Effective asphalt content by total weight of mix using SP-2 Asphalt Mixture
SA = Estimated surface area of the aggregate blend in m^2/kg from Table 6.1 in the Asphalt Institute Manual Series No. 2 (MS-2).
G_b = Specific gravity of asphalt binder

[b] Combine aggregate and asphalt at the asphalt binder supplier's instructed mixing temperature. Coated aggregates that fall through the wire basket during loading must be returned to the basket before conditioning at 350 °F for 1 hour.

DocuSign Envelope ID: 894511EA-295B-49EB-A393-D26A6837FDD4

The OBC must be greater than 4.9 percent by total weight of mix.

39-5.02B(3) Asphalt Binder

Reserved

39-5.02B(4) Aggregate

The aggregate must comply with the requirements shown in the following table:

Aggregate Quality

Quality characteristic	Test method	Requirement
Percent of crushed particles Coarse aggregate (min, %) One-fractured face Two-fractured faces Fine aggregate (min, %) (Passing No. 4 sieve and retained on No. 8 sieve.) One fractured face	AASHTO T 335	 -- 90 85
Los Angeles Rattler (max, %) Loss at 100 Rev. Loss at 500 Rev.	AASHTO T 96	 12 35
Sand equivalent (min)	AASHTO T 176	47
Flat and elongated particles (max, % by weight @ 5:1)	ASTM D4791	25
Fine aggregate angularity (min, %)	AASHTO T 304 Method A	45

[a]Reported value must be the average of 3 tests from a single sample.
[b]Use of a sand reading indicator is required as shown in AASHTO T 176, Figure 1. Sections 4.7, 4.8, 7.1.2, 8.4.2 and 8.4.3 do not apply.

The aggregate gradations for BWC-G must comply with the requirements shown in the following table:

10-17-14

Aggregate Gradation Requirements

BWC-G pavement thickness shown	Gradation
less than 0.08 foot	No. 4 or 3/8 inch
0.08 foot or greater	1/2 inch

04-18-14

The proposed aggregate gradation must be within the TV limits for the specified sieve sizes shown in the following tables:

DocuSign Envelope ID: 894511EA-295B-49EB-A393-D26A6837FDD4

Aggregate Gradation
(Percentage Passing)
Bonded Wearing Course—Gap Graded

1/2-inch BWC-G

Sieve sizes	Target value limits	Allowable tolerance
3/4"	100	--
1/2"	80–100	TV ± 6
3/8"	55–80	TV ± 6
No. 4	25–40	TV ± 7
No. 8	19–32	TV ± 5
No. 16	16–22	TV ± 5
No. 30	10–18	TV ± 4
No. 50	8–13	TV ± 4
No. 100	6–10	TV ± 2
No. 200	4.0–7.0	TV ± 2

3/8-inch BWC-G

Sieve sizes	Target value limits	Allowable tolerance
1/2"	100	--
3/8"	80–100	TV ± 6
No. 4	25–40	TV ± 7
No. 8	19–32	TV ± 5
No. 16	16–22	TV ± 5
No. 30	10–18	TV ± 4
No. 50	8–13	TV ± 4
No. 100	7–11	TV ± 2
No. 200	6.0–10.0	TV ± 2

No. 4 BWC-G

Sieve sizes	Target value limits	Allowable tolerance
1/2"	100	--
3/8"	95–100	TV ± 2
No. 4	42–55	TV ± 7
No. 8	19–32	TV ± 5
No. 16	16–22	TV ± 5
No. 30	10–18	TV ± 4
No. 50	8–13	TV ± 4
No. 100	7–11	TV ± 2
No. 200	6.0–10.0	TV ± 2

39-5.02C Construction

10-17-14

Apply asphaltic emulsion when the atmospheric and pavement temperatures are above:

1. 50 degrees F if PG 76-22 M is specified
2. 45 degrees F if PG 64-28 M is specified

04-18-14

39-5.02D Payment

Not Used

39-6 HOT MIX ASPHALT ON BRIDGE DECKS

39-6.01 GENERAL

Section 39-6 includes specifications for producing and placing hot mix asphalt on bridge decks.

DocuSign Envelope ID: 894511EA-295B-49EB-A393-D26A6837FDD4

HMA used for bridge decks must comply with the specifications for Type A HMA in section 39-2.

39-6.02 MATERIALS

Do not use the 1-inch or 3/4-inch aggregate gradation for HMA on bridge decks.
The grade of asphalt binder for HMA must be PG 64-10 or PG 64-16.

39-6.03 CONSTRUCTION

Spread and compact HMA on bridge decks using method compaction.
If a concrete expansion dam is to be placed at a bridge deck expansion joint, tape oil-resistant construction paper to the deck over the area to be covered by the dam before placing the tack coat and HMA across the joint.
Apply tack coat at the minimum residual rate specified in section 39-1.03C(5). For HMA placed on a deck seal, use the minimum residual rate specified for PCC.
For HMA placed on a deck seal:

1. Place the HMA within 7 days after installing the deck seal.
2. If a paper mask is placed on the deck under section 54-5.03, place the HMA continuously across the paper mask.
3. Place HMA in at least 2 approximately equal layers.
4. For placement of the 1st HMA layer:
   - 4.1. Comply with the HMA application temperature recommended by the deck seal manufacturer.
   - 4.2. Deliver and place HMA using equipment with pneumatic tires or rubber-faced wheels. Do not operate other vehicles or equipment on the bare deck seal.
   - 4.3. Deposit HMA on the deck seal in such a way that the deck seal is not damaged. Do not use a windrow.
   - 4.4. Place HMA in a downhill direction on bridge decks with grades over 2 percent.
   - 4.5. Self-propelled spreading equipment is not required.

39-6.04 PAYMENT

Not Used

39-7 MINOR HOT MIX ASPHALT

39-7.01 GENERAL

39-7.01A Summary

Section 39-7 includes specifications for producing and placing minor hot mix asphalt.
Minor HMA must comply with section 39-2 except as specified in this section 39-7.

39-7.01B Definitions

Reserved

39-7.01C Submittals

The QC plan, test results, and inertial profiler specifications in sections 39-1.01C(3), 39-1.01C(4), 39-1.01C(13)(c)–(d) do not apply.

39-7.01D Quality Control and Assurance

39-7.01D(1) General

For minor HMA, the JMF renewal, inertial profiler certifications and testing, and prepaving meeting specifications in sections 39-1.01D(4), 39-1.01D(6)(c), and 39-1.01D(7) do not apply.
Test pavement smoothness with a 12 foot straightedge.

DocuSign Envelope ID: 894511EA-295B-49EB-A393-D26A6837FDD4

39-7.01D(2) Quality Control

For minor HMA, section 39-2.01D(2) applies except testing for compliance with the following quality characteristics is not required:

1. Flat and elongated particles
2. Fine aggregate angularity
3. Hamburg wheel track
4. Moisture susceptibility

39-7.01D(3) Department Acceptance

The Department accepts minor HMA under section 39-2.01D(5) except compliance with the following quality characteristics is not required:

1. Flat and elongated particles
2. Fine aggregate angularity
3. Hamburg wheel track
4. Moisture susceptibility

39-7.02 MATERIALS

39-7.02A General

Reserved

39-7.02B Mix Design

The mix design for minor HMA must comply with section 39-2.02B except the Hamburg wheel track and moisture susceptibility requirements do not apply.

39-7.02C Asphalt Binder

The grade of asphalt binder for minor HMA must be PG-64-10 or PG-64-16.

39-7.02D Liquid Antistrip Treatment

10-17-14

Treat minor HMA with liquid antistrip. Liquid antistrip treatment is not required if you submit AASHTO T 283 and AASHTO T 324 (Modified) test results showing compliance with section 39-2.02B. The tests must be dated within 12 months of submittal.

04-18-14

39-7.03 CONSTRUCTION

Not Used

39-7.04 PAYMENT

Not Used

39-8–39-10 RESERVED

^^

40 CONCRETE PAVEMENT

07-19-13

Replace the headings and paragraphs in section 40 with:

07-19-13

40-1 GENERAL

40-1.01 GENERAL

40-1.01A Summary

Section 40-1 includes general specifications for constructing concrete pavement.

DocuSign Envelope ID: 894511EA-295B-49EB-A393-D26A6837FDD4

40-1.01B Definitions

concrete raveling: Progressive disintegration of the pavement surface resulting from dislodged aggregate.

full depth crack: Crack that runs from one edge of the slab to the opposite or adjacent side of the slab, except a crack parallel to and within 0.5 foot of either side of a planned contraction joint

working crack: Crack that extends through the full depth of the slab and is parallel to and within 0.5 foot of either side of a planned contraction joint.

action limit: Value at which corrective actions must be made while production may continue.

suspension limit: Value at which production must be suspended while corrections are made.

40-1.01C Submittals

40-1.01C(1) General

At least 15 days before delivery to the job site, submit manufacturer's recommendations and instructions for storage and installation of:

1. Threaded tie bar splice couplers
2. Joint filler

As an informational submittal, submit calibration documentation and operational guidelines for frequency measuring devices (tachometer) for concrete consolidation vibrators.
Submit updated quality control charts each paving day.

40-1.01C(2) Certificates of Compliance

Submit a certificate of compliance for:

1. Tie bars
2. Threaded tie bar splice couplers
3. Dowel bars
4. Tie bar baskets
5. Dowel bar baskets
6. Joint filler
7. Epoxy powder coating

40-1.01C(3) Quality Control Plan

Submit a concrete pavement QC plan. Allow 30 days for review.

40-1.01C(4) Mix Design

At least 15 days before testing for mix proportions, submit a copy of the AASHTO accreditation for your laboratory determining the mix proportions. At least 15 days before starting field qualification, submit the proposed concrete mix proportions, the corresponding mix identifications, and laboratory test reports including the modulus of rupture for each trial mixture at 10, 21, 28, and 42 days.

40-1.01C(5) Concrete Field Qualification

Submit field qualification data and test reports including:

1. Mixing date
2. Mixing equipment and procedures used
3. Batch volume in cubic yards. The minimum batch size is 5 cu yd.
4. Type and source of ingredients used
5. Penetration of the concrete
6. Air content of the plastic concrete
7. Age and strength at time of concrete beam testing

DocuSign Envelope ID: 894511EA-295B-49EB-A393-D26A6837FDD4

Field qualification test reports must be certified with a signature by an official in responsible charge of the laboratory performing the tests.

40-1.01C(6) Cores

Submit for authorization the name of the laboratory you propose to use for testing the cores for air content.

Submit each core in an individual plastic bag marked with a location description.

40-1.01C(7) Profile Data and Straightedge Measurements

At least 5 business days before start of initial profiling or changing profiler or operator, submit:

1. Inertial profiler (IP) certification issued by the Department. The certification must not be more than 12 months old.
2. Operator certification for the IP issued by the Department. The operator must be certified for each different model of IP device operated. The certification must not be more than 12 months old.
3. List of manufacturer's recommended test procedures for IP calibration and verification.

Within 2 business days after cross correlation testing, submit ProVAL profiler certification analysis report for cross correlation test results performed on test section. ProVAL is FHWA's software. Submit the certification analysis report to the Engineer and to the electronic mailbox address:

smoothness@dot.ca.gov

Within 2 business days after each day of inertial profiling, submit profile data to the Engineer and to the electronic mailbox address:

smoothness@dot.ca.gov

Within 2 business days of performing straightedge testing, submit a report of areas requiring smoothness correction.

40-1.01C(8)–40-1.01C(12) Reserved

40-1.01D Quality Control and Assurance

40-1.01D(1) General

If the pavement quantity is at least 2000 cu yd, provide a QC manager.

Core pavement as described for, thickness, bar placement, and air content.

For the Department's modulus of rupture testing, assist the Engineer in fabricating test beams by providing materials and labor.

Allow at least 25 days for the Department to schedule testing for coefficient of friction. Notify the Engineer when the pavement is scheduled to be opened to traffic. Notify the Engineer when the pavement is ready for testing which is the latter of:

1. Seven days after paving
2. When the pavement has attained a modulus of rupture of at least 550 psi

The Department tests for coefficient of friction within 7 days of receiving notification that the pavement is ready for testing.

40-1.01D(2) Prepaving Conference

Schedule a prepaving conference at a mutually agreed upon time and place to meet with the Engineer. Make the arrangements for the conference facility. Discuss QC plan and methods of performing each item of the work.

Prepaving conference attendees must sign an attendance sheet provided by the Engineer. The prepaving conference must be attended by your:

1. Project superintendent

DocuSign Envelope ID: 894511EA-295B-49EB-A393-D26A6837FDD4

2. QC manager
3. Paving construction foreman
4. Workers and your subcontractor's workers, including:
   - 4.1. Foremen including subcontractor's Foremen
   - 4.2. Concrete plant manager
   - 4.3. Concrete plant operator

Do not start paving activities including test strips until the listed personnel have attended a prepaving conference.

40-1.01D(3) Just-In-Time-Training

Reserved

40-1.01D(4) Quality Control Plan

Establish, implement, and maintain a QC plan for pavement. The QC plan must describe the organization and procedures used to:

1. Control the production process
2. Determine if a change to the production process is needed
3. Implement a change

The QC plan must include action and suspension limits and details of corrective action to be taken if any process is out of those limits. Suspension limits must not exceed specified acceptance criteria.

The QC plan must address the elements affecting concrete pavement quality including:

1. Mix proportions
2. Aggregate gradation
3. Materials quality
4. Stockpile management
5. Line and grade control
6. Proportioning
7. Mixing and transportation
8. Placing and consolidation
9. Contraction and construction joints
10. Bar reinforcement placement and alignment
11. Dowel bar placement, alignment, and anchorage
12. Tie bar placement
13. Modulus of rupture
14. Finishing and curing
15. Protecting pavement
16. Surface smoothness

40-1.01D(5) Mix Design

Use a laboratory that complies with ASTM C 1077 to determine the mix proportions for concrete pavement. The laboratory must have a current AASHTO accreditation for:

1. AASHTO T 97 or ASTM C 78
2. ASTM C 192/C 192M

Make trial mixtures no more than 24 months before field qualification.

Using your trial mixtures, determine the minimum cementitious materials content. Use your value for minimum cementitious material content for *MC* in equation 1 and equation 2 of section 90-1.02B(3).

To determine the minimum cementitious materials content or maximum water to cementitious materials ratio, use modulus of rupture values of at least 570 psi for 28 days age and at least 650 psi for 42 days age.

DocuSign Envelope ID: 894511EA-295B-49EB-A393-D26A6837FDD4

If changing an aggregate supply source or the mix proportions, produce a trial batch and field-qualify the new concrete. The Engineer does not adjust contract time for performing sampling, testing, and qualifying new mix proportions or changing an aggregate supply source.

40-1.01D(6) Quality Control Testing

40-1.01D(6)(a) General

Testing laboratories and testing equipment must comply with the Department's Independent Assurance Program.

40-1.01D(6)(b) Concrete Mix

Before placing pavement, your mix design must be field qualified. Use an ACI certified "Concrete Laboratory Technician, Grade I" to perform field qualification tests and calculations. Test for modulus of rupture under California Test 523 at 10, 21, and 28 days of age.

When placing pavement, your quality control must include testing properties at the frequencies shown in the following table:

QC Testing Frequency

Property	Test method	Minimum frequency
Cleanness value	California Test 227	2 per day
Sand equivalent	California Test 217	2 per day
Aggregate gradation	California Test 202	2 per day
Air content (air entrainment specified)	California Test 504	1 per hour
Air content (air entrainment not specified)	California Test 504	1 per 4 hours
Density	California Test 518	1 per 4 hours
Penetration	California Test 533	1 per 4 hours
Aggregate moisture meter calibration[a]	California Test 223 or California Test 226	1 per day

[a] Check calibration of the plant moisture meter by comparing moisture meter readings with California Test 223 or California Test 226 test results.

Maintain control charts to identify potential problems and assignable causes. Post a copy of each control chart at a location determined by the Engineer.

Individual measurement control charts must use the target values in the mix proportions as indicators of central tendency.

Develop linear control charts for:

1. Cleanness value
2. Sand equivalent
3. Fine and coarse aggregate gradation
4. Air content
5. Penetration

Control charts must include:

1. Contract number
2. Mix proportions
3. Test number
4. Each test parameter
5. Action and suspension limits
6. Specification limits
7. Quality control test results

For fine and coarse aggregate gradation control charts, record the running average of the previous 4 consecutive gradation tests for each sieve and superimpose the specification limits.

For air content control charts, the action limit is ±1.0 percent of the specified value. If no value is specified, the action limit is ±1.0 percent of the value used for your approved mix design.

DocuSign Envelope ID: 894511EA-295B-49EB-A393-D26A6837FDD4

As a minimum, a process is out of control if any of the following occurs:

1. For fine and coarse aggregate gradation, 2 consecutive running averages of 4 tests are outside the specification limits
2. For individual penetration or air content measurements:
   - 2.1. One point falls outside the suspension limit line
   - 2.2. Two points in a row fall outside the action limit line

Stop production and take corrective action for out of control processes or the Engineer rejects subsequent material.

Before each day's concrete pavement placement and at intervals not to exceed 4 hours of production, use a tachometer to test and record vibration frequency for concrete consolidation vibrators.

40-1.01D(6)(c) Pavement Smoothness

40-1.01D(6)(c)(i) General

Notify the Engineer 2 business days before performing smoothness testing including IP calibration and verification testing. The notification must include start time and locations by station.

Before testing the pavement smoothness, remove foreign objects from the surface, and mark the beginning and ending station on the pavement shoulder.

Test pavement smoothness using an IP except use a 12-foot straightedge at the following locations:

1. Traffic lanes less than 1,000 feet in length including ramps, turn lanes, and acceleration and deceleration lanes
2. Areas within 15 feet of manholes
3. Shoulders
4. Weigh-in-motion areas
5. Miscellaneous areas such as medians, gore areas, turnouts, and maintenance pullouts

40-1.01D(6)(c)(ii) Straightedge Testing

Identify locations of areas requiring correction by:

1. Location Number
2. District-County-Route
3. Beginning station or post mile to the nearest 0.01 mile
4. For correction areas within a lane:
   - 4.1. Lane direction as NB, SB, EB, or WB
   - 4.2. Lane number from left to right in direction of travel
   - 4.3. Wheel path as "L" for left, "R" for right, or "B" for both
5. For correction areas not within a lane:
   - 5.1. Identify pavement area (e.g., shoulder, weight station, turnout)
   - 5.2. Direction and distance from centerline as "L" for left or "R" for right
6. Estimated size of correction area

40-1.01D(6)(c)(iii) Inertial Profile Testing

IP equipment must display a current certification decal with expiration date.

Conduct cross correlation IP verification test in the Engineer's presence before performing initial profiling. Verify cross correlation IP verification test at least annually. Conduct 5 repeat runs of the IP on an authorized test section. The test section must be on an existing concrete pavement surface 0.1 mile long. Calculate a cross correlation to determine the repeatability of your device under Section 8.3.1.2 of AASHTO R 56 using ProVAL profiler certification analysis with a 3 feet maximum offset. The cross correlation must be a minimum of 0.92.

Conduct the following IP calibration and verification tests in the Engineer's presence each day before performing inertial profiling:

DocuSign Envelope ID: 894511EA-295B-49EB-A393-D26A6837FDD4

1. Block test. Verify the height sensor accuracy under AASHTO R 57, section 5.3.2.3.
2. Bounce test. Verify the combined height sensor and accelerometer accuracy under AASHTO R 57, section 5.3.2.3.2.
3. DMI test. Calibrate the accuracy of the testing procedure under AASHTO R 56, section 8.4.
4. Manufacturer's recommended tests.

Collect IP data using the specified ProVAL analysis with 250 mm and IRI filters. Comply with the requirements for data collection under AASHTO R 56.
For IP testing, wheel paths are 3 feet from and parallel to the edge of a lane. Left and right are relative to the direction of travel. The IRI is the pavement smoothness along a wheel path of a given lane. The MRI is the average of the IRI values for the left and right wheel path from the same lane.
Operate the IP according to the manufacturer's recommendations and AASHTO R 57 at 1-inch recording intervals and a minimum 4 inch line laser sensor.
Collect IP data under AASHTO R 56.IP data must include:

1. Raw profile data for each lane.
2. ProVAL ride quality analysis report for the international roughness index (IRI) of left and right wheel paths of each lane. Submit in pdf file format.
3. ProVAL ride quality analysis report for the mean roughness index (MRI) of each lane. Submit in pdf file format.
4. ProVAL smoothness assurance analysis report for IRIs of left wheel path. Submit in pdf file format.
5. ProVAL smoothness assurance analysis report for IRIs of right wheel path. Submit in pdf file format.
6. GPS data file for each lane in GPS exchange. Submit in GPS eXchange file format.
7. Manufacturer's recommended IP calibration and verification tests results.
8. AASHTO IP calibration and verification test results including bounce, block, and distance measurement instrument (DMI).

Submit the IP raw profile data in unfiltered electronic pavement profile file (PPF) format. Name the PPF file using the following naming convention:

YYYYMMDD_TTCCCRRR_D_L_W_S_X_PT.PPF

where:
YYYY = year
MM = Month, leading zero
DD = Day of month, leading zero
TT = District, leading zero
CCC = County, 2 or 3 letter abbreviation as shown in section 1-1.08
RRR = Route number, no leading zeros
D = Traffic direction as NB, SB, WB, or EB
L = Lane number from left to right in direction of travel
W = Wheel path as "L" for left, "R" for right, or "B" for both
S = Beginning station to the nearest foot (e.g., 10+20) or beginning post mile to the nearest hundredth (e.g., 25.06) no leading zero
X = Profile operation as "EXIST" for existing pavement, "PAVE" for after paving, or "CORR" for after final surface pavement correction
PT = Pavement type (e.g., "concrete", etc.)

Determine IRIs using the ProVAL ride quality analysis with a 250 mm and IRI filters. While collecting the profile data to determine IRI, record the following locations in the raw profile data:

1. Begin and end of all bridge approach slabs
2. Begin and end of all bridges

DocuSign Envelope ID: 894511EA-295B-49EB-A393-D26A6837FDD4

3. Begin and end of all culverts visible on the roadway surface

For each 0.1 mile section, your IRI values must be within 10 percent of the Department's IRI values. The Engineer may order you to recalibrate your IP equipment and reprofile. If your results are inaccurate due to operator error, the Engineer may disqualify your IP operator.

Determine the MRI for 0.1-mile fixed sections. A partial section less than 0.1 mile that is the result of an interruption to continuous pavement surface must comply with the MRI specifications for a full section. Adjust the MRI for a partial section to reflect a full section based on the proportion of a section paved.

Determine the areas of localized roughness. Use the ProVAL smoothness assurance with a continuous IRI for each wheel path, 25-foot interval, and 250 mm and IRI filters.

40-1.01D(6)(c)(iv) Reserved

40-1.01D(6)(d)–40-1.01D(6)(h) Reserved

40-1.01D(7) Pavement Acceptance

40-1.01D(7)(a) Acceptance Testing

40-1.01D(7)(a)(i) General

The Department's acceptance testing includes testing the pavement properties at the minimum frequencies shown in the following table:

Acceptance Testing

Property	Test Method		Frequency[a]
	CRCP	JPCP	
Modulus of rupture (28 day)	California Test 523		1,000 cu yd
Air content[b]	California Test 504		1 day's paving
Dowel bar placement	--	Measurement[a]	700 sq yd
Tie bar placement	--	Measurement[a]	4,000 sq yd
Thickness	California Test 531		1,200 sq yd
Coefficient of friction	California Test 342		1 day's paving

[a]A single test represents no more than the frequency specified.
[b]Tested only when air entrainment is specified.

Pavement smoothness may be accepted based on your testing in the absence of the Department's testing.

40-1.01D(7)(a)(ii) Air Content

If air-entraining admixtures are specified, the Engineer uses a t-test to compare your QC test results with the Department's test results. The t-value for test data is determined using the following equation:

$$t = \frac{|\overline{X}_c - \overline{X}_v|}{S_p\sqrt{\frac{1}{n_c} + \frac{1}{n_v}}} \quad \text{and} \quad S_p^2 = \frac{S_c^2(n_c - 1) + S_v^2(n_v - 1)}{n_c + n_v - 2}$$

where:

n_c = Number of your quality control tests (minimum of 6 required)
n_v = Number of Department's tests (minimum of 2 required)
$\overline{X}_c$ = Mean of your quality control tests
$\overline{X}_v$ = Mean of the Department's tests
S_p = Pooled standard deviation
(When $n_v = 1$, $S_p = S_c$)

DocuSign Envelope ID: 894511EA-295B-49EB-A393-D26A6837FDD4

S_c = Standard deviation of your quality control tests
S_v = Standard deviation of the Department's tests (when $n_v > 1$)

The Engineer compares your QC test results with the Department's test results at a level of significance of $\alpha = 0.01$. The Engineer compares the t-value to tcrit, using degrees of freedom showing in the following table:

degrees of freedom (nc+nv-2)	tcrit (for $\alpha = 0.01$)
1	63.657
2	9.925
3	5.841
4	4.604
5	4.032
6	3.707
7	3.499
8	3.355
9	3.250
10	3.169

If the t-value calculated is less than or equal to tcrit, your quality control test results are verified. If the t-value calculated is greater than tcrit, quality control test results are not verified.
If your quality control test results are not verified, core at least 3 specimens from concrete pavement under section 40-1.03P. The Engineer selects the core locations. The authorized laboratory must test these specimens for air content under ASTM C 457. The Engineer compares these test results with your quality control test results using the t-test method. If your quality control test results are verified based on this comparison, the Engineer uses the quality control test results for acceptance of concrete pavement for air content. If your quality control test results are not verified based on this comparison, the Engineer uses the air content of core specimens determined by the authorized laboratory under ASTM C 457 for acceptance.

40-1.01D(7)(a)(iii) Dowel and Tie Bar Placement

For JPCP, drill cores under section 40-1.03P for the Department's acceptance testing.
The Engineer identifies which joint and dowel or tie bar are to be tested. Core each day's paving within 2 business days. Each dowel or tie bar test consists of 2 cores, 1 on each bar end to expose both ends and allow measurement.
If the tests indicate dowel or tie bars are not placed within the specified tolerances or if there is unconsolidated concrete around the dowel or tie bars, core additional specimens identified by Engineer to determine the limits of unacceptable work.

40-1.01D(7)(a)(iv) Thickness

Drill cores under section 40-1.03P for the Department's acceptance testing in the primary area, which is the area placed in 1 day for each thickness. Core at locations determined by the Engineer and in the Engineer's presence.
Do not core until any grinding has been completed.
The core specimen diameter must be 4 inches. To identify the limits of concrete pavement deficient in thickness by more than 0.05 foot, you may divide primary areas into secondary areas. The Engineer measures cores under California Test 531 to the nearest 0.01 foot. Core at least 1 foot from existing, contiguous, and parallel concrete pavement not constructed as part of this Contract.

DocuSign Envelope ID: 894511EA-295B-49EB-A393-D26A6837FDD4

You may request the Engineer make additional thickness measurements and use them to determine the average thickness variation. The Engineer determines the locations with random sampling methods.

If each thickness measurement in a primary area is less than 0.05 foot deficient, the Engineer calculates the average thickness deficiency in that primary area. The Engineer uses 0.02 foot for a thickness difference more than 0.02 foot over the specified thickness.

For each thickness measurement in a primary area deficient by more than 0.05 foot, the Engineer determines a secondary area where the thickness deficiency is more than 0.05 foot. The Engineer determines this secondary area by measuring the thickness of each concrete pavement slab adjacent to the measurement found to be more than 0.05 foot deficient. The Engineer continues to measure the thickness until an area that is bound by slabs with thickness deficient by 0.05 foot or less is determined.

Slabs without bar reinforcement are defined by the areas bound by longitudinal and transverse joints and concrete pavement edges. Slabs with bar reinforcement are defined by the areas bound by longitudinal joints and concrete pavement edges and 15-foot lengths. Secondary area thickness measurements in a slab determine that entire slab's thickness.

The Engineer measures the remaining primary area thickness after removing the secondary areas from consideration for determining the average thickness deficiency.

40-1.01D(7)(a)(v)–40-1.01D(7)(a)(ix) Reserved

40-1.01D(7)(b) Acceptance Criteria

40-1.01D(7)(b)(i) General

Reserved

40-1.01D(7)(b)(ii) Modulus of Rupture

For field qualification, the modulus of rupture at no later than 28 days must be at least:

1. 550 psi for each single beam
2. 570 psi for the average of 5 beams

For production, the modulus of rupture for the average of the individual test results of 2 beams aged for 28 days must be at least 570 psi.

40-1.01D(7)(b)(iii) Air Content

The air content must be within ±1.5 percent of the specified value. If no value is specified, the air content must be within ±1.5 percent of, the value used for your approved mix design.

40-1.01D(7)(b)(iv) Bar Reinforcement

In addition to requirements of Section 52, bar reinforcement must be more than 1/2 inch below the saw cut depth at concrete pavement joints.

40-1.01D(7)(b)(v) Dowel Bar and Tie Bar Placement

Tie bar placement must comply with the tolerances shown in the following table:

DocuSign Envelope ID: 894511EA-295B-49EB-A393-D26A6837FDD4

Tie Bar Tolerance

Dimension	Tolerance
Horizontal and vertical skew	5 1/4 inch, max
Longitudinal translation	± 2 inch
Horizontal offset (embedment)	± 2 inch
Vertical depth	1. At least 1/2 inch below the bottom of the saw cut 2. When measured at any point along the bar, not less than 2 inches clear of the pavement's surface and bottom

NOTE: Tolerances are measured relative to the completed joint.

Dowel bar placement must comply with the tolerances shown in the following table:

Dowel Bar Tolerances

Dimension	Tolerance
Horizontal offset	±1 inch
Longitudinal translation	±2 inch
Horizontal skew	5/8 inch, max
Vertical skew	5/8 inch, max
Vertical depth	The minimum distance measured from concrete pavement surface to any point along the top of dowel bar must be: DB + 1/2 inch where: DB = one third of pavement thickness in inches, or the saw cut depth, whichever is greater The maximum distance below the depth shown must be 5/8 inch.

NOTE: Tolerances are measured relative to the completed joint.

The Engineer determines the limits for removal and replacement.

40-1.01D(7)(b)(vi) Pavement Thickness

Concrete pavement thickness must not be deficient by more than 0.05 foot.

The minimum thickness is not reduced for specifications that may affect concrete pavement thickness such as allowable tolerances for subgrade construction.

The Engineer determines the areas of noncompliant pavement, the thickness deficiencies, and the limits where removal is required.

Pavement with an average thickness deficiency less than 0.01 foot is acceptable. If the thickness deficiency is 0.01 foot or more and less than 0.05 foot, you may request authorization to leave the pavement in place and accept a pay adjustment. If the deficiency is more than 0.05 foot the pavement must be removed and replaced.

40-1.01D(7)(b)(vii) Pavement Smoothness

Where testing with an IP is required, the pavement surface must have:

1. No areas of localized roughness with an IRI greater than 120 in/mi
2. MRI of 60 in/mi or less within a 0.1 mile section

DocuSign Envelope ID: 894511EA-295B-49EB-A393-D26A6837FDD4

Where testing with a straightedge is required, the pavement surface must not vary from the lower edge of the straightedge by more than:

1. 0.01 foot when the straightedge is laid parallel with the centerline
2. 0.02 foot when the straightedge is laid perpendicular to the centerline and extends from edge to edge of a traffic lane
3. 0.02 foot when the straightedge is laid within 24 feet of a pavement conform

40-1.01D(7)(b)(viii) Coefficient of Friction

Initial and final texturing must produce a coefficient of friction of at least 0.30. Do not open the pavement to traffic unless the coefficient of friction is at least 0.30.

40-1.01D(7)(b)(ix)–40-1.01D(7)(b)(xii) Reserved

40-1.02 MATERIALS

40-1.02A General

Water for coring must comply with section 90.

Tack coat must comply with section 39.

40-1.02B Concrete

40-1.02B(1) General

PCC for pavement must comply with section 90-1 except as otherwise specified.

40-1.02B(2) Cementitious Material

Concrete must contain from 505 pounds to 675 pounds cementitious material per cubic yard. The specifications for reducing cementitious material content in section 90-1.02E(2) do not apply .

40-1.02B(3) Aggregate

Aggregate must comply with section 90-1.02C except the specifications for reduction in operating range and contract compliance for cleanness value and sand equivalent specified in section 90-1.02C(2) and section 90-1.02C(3) do not apply.

For coarse aggregate in high desert and high mountain climate regions, the loss must not exceed 25 percent when tested under California Test 211 with 500 revolutions.

For combined aggregate gradings, the difference between the percent passing the 3/8-inch sieve and the percent passing the no. 8 sieve must not be less than 16 percent of the total aggregate.

40-1.02B(4) Air Entrainment

The second paragraph of section 90-1.02I(2)(a) does not apply.

For a project shown in the low and south mountain climate regions, add air-entraining admixture to the concrete at the rate required to produce an air content of 4 percent in the freshly mixed concrete.

For a project shown in the high desert and high mountain climate regions, add air-entraining admixture to the concrete at the rate required to produce an air content of 6 percent in the freshly mixed concrete.

40-1.02B(5)–40-1.02B(8) Reserved

40-1.02C Reinforcement, Bars, and Baskets

40-1.02C(1) Bar Reinforcement

Bar reinforcement must be deformed bars.

If the project is not shown to be in high desert or any mountain climate region, bar reinforcement must comply with section 52.

If the project is shown to be in high desert or any mountain climate regions, bar reinforcement must be one of the following:

DocuSign Envelope ID: 894511EA-295B-49EB-A393-D26A6837FDD4

1. Epoxy-coated bar reinforcement under section 52-2.03B except bars must comply with either ASTM A 706/A 706M; ASTM A 996/A 996M; or ASTM A 615/A 615M, Grade 40 or 60. Bars must be handled under ASTM D 3963/D 3963M and section 52-2.02C.
2. Low carbon, chromium steel bar complying with ASTM A 1035/A 1035M

40-1.02C(2) Dowel Bars

Dowel bars must be plain bars. Fabricate, sample, and handle epoxy-coated dowel bars under ASTM D 3963/D 3963M and section 52-2.03C except each sample must be 18 inches long.
If the project is not shown to be in high desert or any mountain climate region, dowel bars must be one of the following:

1. Epoxy-coated bars. Bars must comply with ASTM A 615/A 615M, Grade 40 or 60. Epoxy coating must comply with either section 52-2.02B or 52-2.03B.
2. Stainless-steel bars. Bars must be descaled solid stainless-steel bars under ASTM A 955/A 955M, UNS Designation S31603 or S31803.
3. Low carbon, chromium-steel bars under ASTM A 1035/A 1035M.

If the project is shown to be in high desert or any mountain climate region, dowel bars must be one of the following:

1. Epoxy-coated bars. Bars must comply with ASTM A 615/A 615M, Grade 40 or 60. Epoxy coating must comply with section 52-2.03B.
2. Stainless-steel bars. Bars must be descaled solid stainless-steel bars under ASTM A 955/A 955M, UNS Designation S31603 or S31803.

40-1.02C(3) Tie Bars

Tie bars must be deformed bars.
If the project is not shown to be in high desert or any mountain climate region, tie bars must be one of the following:

1. Epoxy-coated bar reinforcement. Bars must comply with either section 52-2.02B or 52-2.03B except bars must comply with either ASTM A 706/A 706M; ASTM A 996/A 996M; or ASTM A 615/A 615M, Grade 40 or 60.
2. Stainless-steel bars. Bars must be descaled solid stainless-steel bars under ASTM A 955/A 955M, UNS Designation S31603 or S31803.
3. Low carbon, chromium-steel bars under ASTM A 1035/A 1035M.

If the project is shown to be in high desert or any mountain climate region, tie bars must be one of the following:

1. Epoxy-coated bar reinforcement. Bars must comply with section 52-2.03B except bars must comply with either ASTM A 706/A 706M; ASTM A 996/A 996M; or ASTM A 615/A 615M, Grade 40 or 60.
2. Stainless-steel bars. Bars must be descaled solid stainless-steel bars under ASTM A 955/A 955M, UNS Designation S31603 or S31803.

Fabricate, sample, and handle epoxy-coated tie bars under ASTM D 3963/D 3963M, section 52-2.02, or section 52-2.03.
Do not bend tie bars.

40-1.02C(4) Dowel and Tie Bar Baskets

For dowel and tie bar baskets, wire must comply with ASTM A 82/A 82M and be welded under ASTM A 185/A 185M, Section 7.4. The minimum wire-size no. is W10. Use either U-frame or A-frame shaped assemblies.
If the project is not shown to be in high desert or any mountain climate region, baskets may be epoxy-coated, and the epoxy coating must comply with either section 52-2.02B or 52-2.03B.
If the project is shown to be in high desert or any mountain climate region, wire for dowel bar and tie bar baskets must be one of the following:

DocuSign Envelope ID: 894511EA-295B-49EB-A393-D26A6837FDD4

1. Epoxy-coated wire complying with section 52-2.03B
2. Stainless-steel wire. Wire must be descaled solid stainless-steel. Wire must comply with (1) the chemical requirements in ASTM A 276/A 276M, UNS Designation S31603 or S31803 and (2) the tension requirements in ASTM A 1022/ A 1022M.

Handle epoxy-coated tie bar and dowel bar baskets under ASTM D 3963/D 3963M and either section 52-2.02 or 52-2.03.

Fasteners must be driven fasteners under ASTM F 1667. Fasteners on lean concrete base or HMA must have a minimum shank diameter of 3/16 inch and a minimum shank length of 2-1/2 inches. For asphalt treated permeable base or cement treated permeable base, the shank diameter must be at least 3/16 inch and the shank length must be at least 5 inches.

Fasteners, clips, and washers must have a minimum 0.2-mil thick zinc coating applied by either electroplating or galvanizing.

40-1.02D Dowel Bar Lubricant

Dowel bar lubricant must be petroleum paraffin based or a curing compound. Paraffin-based lubricant must be Dayton Superior DSC BB-Coat or Valvoline Tectyl 506 or an approved equal and must be factory-applied. Curing compound must be curing compound no. 3.

40-1.02E Joint Filler

Joint filler for isolation joint must be preformed expansion joint filler for concrete (bituminous type) under ASTM D 994.

40-1.02F Curing Compound

Curing compound must be curing compound no. 1 or 2.

40-1.02G Nonshrink Hydraulic Cement Grout

Nonshrink hydraulic cement grout must comply with ASTM C 1107/C 1107M. Clean, uniform, rounded aggregate filler may be used to extend the grout. Aggregate filler must not exceed 60 percent of the grout mass or the maximum recommended by the manufacturer, whichever is less. Aggregate filler moisture content must not exceed 0.5 percent when tested under California Test 223 or California Test 226. Aggregate filler tested under California Test 202 must comply with the grading shown in the following table:

Aggregate Filler Grading

Sieve size	Percentage passing
1/2-inch	100
3/8-inch	85–100
No. 4	10–30
No. 8	0–10
No. 16	0–5

40-1.02H Temporary Roadway Pavement Structure

Temporary roadway pavement structure must comply with section 41-1.02E.

40-1.02I–40-1.02N Reserved

40-1.03 CONSTRUCTION

40-1.03A General

Aggregate and bulk cementitious material must be proportioned by weight by means of automatic proportioning devices of approved types.

For widenings and lane reconstruction, construct only the portion of pavement where the work will be completed during the same lane closure. If you fail to complete the construction during the same lane closure, construct a temporary pavement structure under section 41-1.

DocuSign Envelope ID: 894511EA-295B-49EB-A393-D26A6837FDD4

40-1.03B Water Supply

Before placing concrete pavement, develop enough water supply.

40-1.03C Test Strips

Construct a test strip for each type of pavement with a quantity of more than 2,000 cu yd. Obtain authorization of the test strip before constructing pavement. Test strips must be:

1. 700 to 1,000 feet long
2. Same width as the planned paving, and
3. Constructed using the same equipment proposed for paving

The Engineer selects from 6 to 12 core locations for dowel bars and up to 6 locations for tie bars per test strip. If you use mechanical dowel bar inserters, the test strip must demonstrate they do not leave voids, segregations, or surface irregularities such as depressions, dips, or high areas.
Test strips must comply with the acceptance criteria for:

1. Smoothness, except IP is not required
2. Dowel bars and tie bars placement
3. Pavement thickness
4. Final finishing, except the coefficient of friction is not considered

Allow 3 business days for evaluation. If the test strip is noncompliant, stop paving and submit a plan for changed materials, methods, or equipment. Allow 3 business days for authorization of the plan. Construct another test strip per the authorized plan.
Remove and dispose of noncompliant test strips.
If the test strip is compliant except for smoothness and final finishing, you may grind the surface. After grinding retest the test strip smoothness under section 40-1.01D(6)(c).
If the test strip is compliant for smoothness and thickness, construction of an additional test strip is not required and the test strip may remain in place.
Construct additional test strips if you:

1. Propose different paving equipment including:
   - 1.1. Paver
   - 1.2. Dowel bar inserter
   - 1.3. Tie bar inserter
   - 1.4. Tining
   - 1.5. Curing equipment
2. Change concrete mix proportions

You may request authorization to eliminate the test strip if you use paving equipment and personnel from a Department project (1) for the same type of pavement and (2) completed within the past 12 months. Submit supporting documents and previous project information with your request.

40-1.03D Joints

40-1.03D(1) General

Do not bend tie bars or reinforcement in existing concrete pavement joints.
For contraction joints and isolation joints, saw cut a groove with a power-driven saw. After cutting, immediately wash slurry from the joint with water at less than 100 psi pressure.
Keep joints free from foreign material including soil, gravel, concrete, and asphalt. To keep foreign material out of the joint, you may use filler material. Filler material must not react adversely with the concrete or cause concrete pavement damage. After sawing and washing, install filler material that keeps moisture in the adjacent concrete during the 72 hours after paving. If you install filler material, the specifications for spraying the sawed joint with additional curing compound in

DocuSign Envelope ID: 894511EA-295B-49EB-A393-D26A6837FDD4

section 40-1.03K does not apply. If using absorptive filler material, moisten the filler immediately before or after installation.

40-1.03D(2) Construction Joints

Construction joints must be vertical.

Before placing fresh concrete against hardened concrete, existing concrete pavement, or structures, apply curing compound no. 1 or 2 to the vertical surface of the hardened concrete, existing concrete pavement, or structures and allow it to dry.

At joints between concrete pavement and HMA, apply tack coat between the concrete pavement and HMA.

Use a metal or wooden bulkhead to form transverse construction joints. If dowel bars are described, the bulkhead must allow dowel bar installation.

40-1.03D(3) Contraction Joints

Saw contraction joints before cracking occurs and after the concrete is hard enough to saw without spalling, raveling, or tearing.

Saw cut using a power saw with a diamond blade. After cutting, immediately wash slurry from the joint with water at less than 100 psi pressure.

Except for longitudinal joints parallel to a curving centerline, transverse and longitudinal contraction joints must not deviate by more than 0.1 foot from either side of a 12-foot straight line

Cut transverse contraction joints within 0.5 foot of the spacing described. Adjust spacing if needed such that slabs are at least 10 feet long.

For widenings, do not match transverse contraction joints with existing joint spacing or skew unless otherwise described.

Cut transverse contraction joints straight across the full concrete pavement width, between isolation joints and edges of pavement. In areas of converging and diverging pavements, space transverse contraction joints such that the joint is continuous across the maximum pavement width.

Longitudinal contraction joints must be parallel with the concrete pavement centerline, except when lanes converge or diverge.

40-1.03D(4) Isolation Joints

Before placing concrete at isolation joints, prepare the existing concrete face and secure joint filler. Prepare by saw cutting and making a clean flat vertical surface. Make the saw cut the same depth as the depth of the new pavement.

40-1.03E Bar Reinforcement

Place bar reinforcement under section 52.

40-1.03F Dowel Bar Placement

If using curing compound as lubricant, apply the curing compound to dowels in 2 separate applications. Lubricate each dowel bar entirely before placement. The last application must be applied not more than 8 hours before placing the dowel bars. Apply each curing compound application at a rate of 1 gallon per 150 square feet.

Install dowel bars using one of the following methods:

1. Drill and bond bars. Comply with section 41-10.
2. Mechanical insertion. Eliminate evidence of the insertion by reworking the concrete over the dowel bars.
3. Dowel bar baskets. Anchor baskets with fasteners. Use at least 1 fastener per foot for basket sections. Baskets must be anchored at least 200 feet in advance of the concrete placement activity unless your waiver request is authorized. If requesting a waiver, describe the construction limitations or restricted access preventing the advanced anchoring. After the baskets are anchored and before the concrete is placed, cut and remove temporary spacer wires and demonstrate the dowel bars do not move from their specified depth and alignment during concrete placement.

DocuSign Envelope ID: 894511EA-295B-49EB-A393-D26A6837FDD4

If dowel bars are noncompliant, stop paving activities, demonstrate your correction, and obtain verbal approval from the Engineer.

40-1.03G Tie Bar Placement

Install tie bars at longitudinal joints using one of the following methods:

1. Drill and bond bars. Comply with section 41-10.
2. Insert bars. Mechanically insert tie bars into plastic slip-formed concrete before finishing. Inserted tie bars must have full contact between the bar and the concrete. Eliminate evidence of the insertion by reworking the concrete over the tie bars.
3. Threaded couplers. Threaded tie bar splice couplers must be fabricated from deformed bar reinforcement and free of external welding or machining.
4. Tie bar baskets. Anchor baskets at least 200 feet in advance of pavement placement activity. If you request a waiver, describe the construction limitations or restricted access preventing the advanced anchoring. After the baskets are anchored and before paving, demonstrate the tie bars do not move from their specified depth and alignment during paving. Use fasteners to anchor tie bar baskets.

If tie bars are noncompliant, stop paving activities, demonstrate your correction, and obtain verbal approval from the Engineer.

40-1.03H Placing Concrete

40-1.03H(1) General

Immediately prior to placing concrete, the surface to receive concrete must be:

1. In compliance with specified requirements, including compaction and elevation tolerances
2. Free of loose and extraneous material
3. Uniformly moist, but free of standing or flowing water

Place concrete pavement with stationary side forms or slip-form paving equipment.

Place consecutive concrete loads within 30 minutes of each other. Construct a transverse construction joint when concrete placement is interrupted by more than 30 minutes. The transverse construction joint must coincide with the next contraction joint location, or you must remove fresh concrete pavement to the preceding transverse joint location.

Place concrete pavement in full slab widths separated by construction joints or monolithically in multiples of full lane widths with a longitudinal contraction joint at each traffic lane line.

Do not retemper concrete.

If the concrete pavement surface width is constructed as specified, you may construct concrete pavement sides on a batter not flatter than 6:1 (vertical:horizontal).

40-1.03H(2) Paving Adjacent to Existing Concrete Pavement

Where pavement is placed adjacent to existing concrete pavement:

1. Grinding adjacent pavement must be completed before placing the pavement
2. Use paving equipment with padded crawler tracks or rubber-tired wheels with enough offset to prevent damage
3. Match pavement grade with the elevation of existing concrete pavement after grinding.

40-1.03H(3) Concrete Pavement Transition Panel

For concrete pavement placed in a transition panel, texture the surface with a drag strip of burlap, broom, or spring steel tine device that produces scoring in the finished surface. Scoring must be either parallel or transverse to the centerline. Texture at the time that produces the coarsest texture.

40-1.03H(4) Stationary Side Form Construction

Stationary side forms must be straight and without defects including warps, bends, and indentations. Side forms must be metal except at end closures and transverse construction joints where other materials may be used.

DocuSign Envelope ID: 894511EA-295B-49EB-A393-D26A6837FDD4

You may build up side forms by attaching a section to the top or bottom. If attached to the top of metal forms, the attached section must be metal.
The side form's base width must be at least 80 percent of the specified concrete pavement thickness.
Side forms including interlocking connections with adjoining forms must be rigid enough to prevent springing from subgrading and paving equipment and concrete pressure.
Construct subgrade to final grade before placing side forms. Side forms must bear fully on the foundation throughout their length and base width. Place side forms to the specified grade and alignment of the finished concrete pavement's edge. Support side forms during concrete placing, compacting, and finishing.
After subgrade work is complete and immediately before placing concrete, true side forms and set to line and grade for a distance that avoids delays due to form adjustment.
Clean and oil side forms before each use.
Side forms must remain in place for at least 1 day after placing concrete and until the concrete pavement edge no longer requires protection from the forms.
Spread, screed, shape, and consolidate concrete with 1 or more machines. The machines must uniformly distribute and consolidate the concrete. The machines must operate to place the concrete pavement to the specified cross section with minimal hand work.
Consolidate the concrete without segregation. If vibrators are used:

1. The vibration rate must be at least 3,500 cycles per minute for surface vibrators and 5,000 cycles per minute for internal vibrators
2. Amplitude of vibration must cause perceptible concrete surface movement at least 1 foot from the vibrating element
3. Use a calibrated tachometer for measuring frequency of vibration
4. Vibrators must not rest on side forms or new concrete pavement
5. Power to vibrators must automatically cease when forward or backward motion of the paving machine is stopped
6. Uniformly consolidate the concrete across the paving width including adjacent to forms by using high-frequency internal vibrators within 15 minutes of depositing concrete on the subgrade
7. Do not shift the mass of concrete with vibrators.

40-1.03H(5) Slip-Form Construction

If slip-form construction is used, spread, screed, shape, and consolidate concrete to the specified cross section with slip-form machines and minimal hand work. Slip-form paving machines must be equipped with traveling side forms and must not segregate the concrete.
Do not deviate from the specified concrete pavement alignment by more than 0.1 foot.
Slip-form paving machines must use high frequency internal vibrators to consolidate concrete. You may mount vibrators with their axes parallel or normal to the concrete pavement alignment. If mounted with axes parallel to the concrete pavement alignment, space vibrators no more than 2.5 feet measured center to center. If mounted with axes normal to the concrete pavement alignment, space the vibrators with a maximum 0.5-foot lateral clearance between individual vibrators.
Each vibrator must have a vibration rate from 5,000 to 8,000 cycles per minute. The amplitude of vibration must cause perceptible concrete surface movement at least 1 foot from the vibrating element. Use a calibrated tachometer to measure frequency of vibration.

40-1.03I Edge Treatment

Construct edge treatments as shown. Regrade when required for the preparation of safety edge areas.
Sections 40-1.03J(2) and 40-1.03J(3) do not apply to safety edges.

DocuSign Envelope ID: 894511EA-295B-49EB-A393-D26A6837FDD4

For safety edges placed after the concrete pavement is complete, concrete may comply with the requirements for minor concrete.
For safety edges placed after the concrete pavement is complete, install connecting bar reinforcement under section 52.
Saw cutting or grinding may be used to construct safety edges.
For safety edges, the angle of the slope must not deviate by more than ± 5 degrees from the angle shown. Measure the angle from the plane of the adjacent finished pavement surface.

40-1.03J Finishing

40-1.03J(1) General

Reserved

40-1.03J(2) Preliminary Finishing

40-1.03J(2)(a) General

Preliminary finishing must produce a smooth and true-to-grade finish. After preliminary finishing, mark each day's paving with a stamp. The stamp must be authorized before paving starts. The stamp must be approximately 1 by 2 feet in size. The stamp must form a uniform mark from 1/8 to 1/4 inch deep. Locate the mark 20 ± 5 feet from the transverse construction joint formed at each day's start of paving and 1 ± 0.25 foot from the pavement's outside edge. The stamp mark must show the month, day, and year of placement and the station of the transverse construction joint. Orient the stamp mark so it can be read from the pavement's outside edge.
Do not apply water to the pavement surface before float finishing.

40-1.03J(2)(b) Stationary Side Form Finishing

If stationary side form construction is used, give the pavement a preliminary finish by the machine float method or the hand method.
If using the machine float method:

1. Use self-propelled machine floats.
2. Determine the number of machine floats required to perform the work at a rate equal to the pavement delivery rate. If the time from paving to machine float finishing exceeds 30 minutes, stop pavement delivery. When machine floats are in proper position, you may resume pavement delivery and paving.
3. Run machine floats on side forms or adjacent pavement lanes. If running on adjacent pavement, protect the adjacent pavement surface under section 40-1.03L. Floats must be hardwood, steel, or steel-shod wood. Floats must be equipped with devices that adjust the underside to a true flat surface.

If using the hand method, finish pavement smooth and true to grade with manually operated floats or powered finishing machines.

40-1.03J(2)(c) Slip-Form Finishing

If slip-form construction is used, the slip-form paver must give the pavement a preliminary finish. You may supplement the slip-form paver with machine floats.
Before the pavement hardens, correct pavement edge slump in excess of 0.02 foot exclusive of edge rounding.

40-1.03J(3) Final Finishing

After completing preliminary finishing, round the edges of the initial paving widths to a 0.04-foot radius. Round transverse and longitudinal construction joints to a 0.02-foot radius.
Before curing, texture the pavement. Perform initial texturing with a burlap drag or broom device that produces striations parallel to the centerline. Perform final texturing with a steel-tined device that produces grooves parallel with the centerline.
Construct longitudinal grooves with a self-propelled machine designed specifically for grooving and texturing pavement. The machine must have tracks to maintain constant speed, provide

DocuSign Envelope ID: 894511EA-295B-49EB-A393-D26A6837FDD4

traction, and maintain accurate tracking along the pavement surface. The machine must have a single row of rectangular spring steel tines. The tines must be from 3/32 to 1/8 inch wide, on 3/4-inch centers, and must have enough length, thickness, and resilience to form grooves approximately 3/16 inch deep. The machine must have horizontal and vertical controls. The machine must apply constant down pressure on the pavement surface during texturing. The machines must not cause raveling.

Construct grooves over the entire pavement width in a single pass except do not construct grooves 3 inches from the pavement edges and longitudinal joints. Final texture must be uniform and smooth. Use a guide to properly align the grooves. Grooves must be parallel and aligned to the pavement edge across the pavement width. Grooves must be from 1/8 to 3/16 inch deep after the pavement has hardened.

For irregular areas and areas inaccessible to the grooving machine, you may hand-construct grooves using the hand method. Hand-constructed grooves must comply with the specifications for machine-constructed grooves.

For ramp termini, use heavy brooming normal to the ramp centerline to produce a coefficient of friction of at least 0.35 determined on the hardened surface under California Test 342.

40-1.03K Curing

Cure the concrete pavement's exposed area under section 90-1.03B using the waterproof membrane method or curing compound method. If using the curing compound method use curing compound no. 1 or 2. When side forms are removed within 72 hours of the start of curing, also cure the concrete pavement edges.

Apply curing compound with mechanical sprayers. Reapply curing compound to saw cuts and disturbed areas.

40-1.03L Protecting Concrete Pavement

Protect concrete pavement under section 90-1.03C.

Maintain the concrete pavement surface temperature at not less than 40 degrees F for the initial 72 hours.

Protect the concrete pavement surface from activities that cause damage and reduce texture and coefficient of friction. Do not allow soil, gravel, petroleum products, concrete, or asphalt mixes on the concrete pavement surface.

Construct crossings for traffic convenience. If authorized, you may use RSC for crossings. Do not open crossings until the Department determines that the pavement's modulus of rupture is at least 550 psi under California Test 523 or California Test 524.

Do not open concrete pavement to traffic or use equipment on the concrete pavement for 10 days after paving nor before the concrete has attained a modulus of rupture of 550 psi based on Department's testing except:

1. If the equipment is for sawing contraction joints
2. If authorized, one side of paving equipment's tracks may be on the concrete pavement after a modulus of rupture of 350 psi has been attained, provided:
   - 2.1. Unit pressure exerted on the concrete pavement by the paver does not exceed 20 psi
   - 2.2. You change the paving equipment tracks to prevent damage or the paving equipment tracks travel on protective material such as planks
   - 2.3. No part of the track is closer than 1 foot from the concrete pavement's edge

If concrete pavement damage including visible cracking occurs, stop operating paving equipment on the concrete pavement and repair the damage.

DocuSign Envelope ID: 894511EA-295B-49EB-A393-D26A6837FDD4

40-1.03M Early Use of Concrete Pavement

If requesting early use of concrete pavement:
1. Furnish molds and machines for modulus of rupture testing
2. Sample concrete
3. Fabricate beam specimens
4. Test for modulus of rupture under California Test 523

If you request early use, concrete pavement must have a modulus of rupture of at least 350 psi. Protect concrete pavement under section 40-1.03L.

40-1.03N Reserved

40-1.03O Shoulder Rumble Strip

40-1.03O(1) General

Construct shoulder rumble strips by rolling or grinding indentations in new concrete pavement.
Do not construct shoulder rumble strips on structures or approach slabs.
Construct rumble strips within 2 inches of the specified alignment. Rumble strip equipment must be equipped with a sighting device enabling the operator to maintain the rumble strip alignment.
Indentations must not vary from the specified dimensions by more than 1/16 inch in depth nor more than 10 percent in length and width.
Grind or remove and replace noncompliant rumble strip indentations at locations determined by the Engineer. Ground surface areas must be neat and uniform in appearance.
Remove grinding residue under section 42-1.03B.

40-1.03O(2) Rolled-In Indentations

Construct rolled-in indentations before final concrete set. Indentation construction must not displace adjacent concrete.

40-1.03O(3) Ground-In Indentations

Concrete pavement must be hardened before grinding rumble strips indentations. Do not construct indentations until the following occurs:
1. 10 days elapse after concrete placement
2. Concrete has developed a modulus of rupture of 550 psi determined under California Test 523,

40-1.03P Drilling Cores

Drill concrete pavement cores under ASTM C 42/C 42M. Use diamond impregnated drill bits.
Clean, dry, and fill core holes with hydraulic cement grout (nonshrink) or pavement concrete. Coat the core hole walls with epoxy adhesive for bonding new concrete to old concrete under section 95. Finish the backfill to match the adjacent surface elevation and texture.

40-1.03Q Pavement Repair and Replacement

40-1.03Q(1) General

If surface raveling or full-depth cracks occur within one year of Contract acceptance, repair or replace the pavement under section 6-3.06.
Repair and replace pavement in the following sequence:
1. Replace pavement
2. Repair spall, ravel, and working cracks
3. Correct smoothness and coefficient of friction
4. Treat partial depth cracks
5. Replace damaged joint seals under section 41-5

In addition to removing pavement for other noncompliance, remove and replace JPCP slabs that:
1. Have one or more full depth crack

DocuSign Envelope ID: 894511EA-295B-49EB-A393-D26A6837FDD4

2. Have raveled surfaces such that either:
   2.1. Combined raveled areas are more than 5 percent of the total slab area
   2.2. Single area is more than 4 sq ft

Remove and replace JPCP 3 feet on both sides of a joint with a rejected dowel bar.

40-1.03Q(2) Spall and Ravel Repair

Repair spalled or raveled areas that are:
1. Deeper than 0.05 foot
2. Wider than 0.10 foot
3. Longer than 0.3 foot

Repairs must comply with section 41-4 and be completed before opening pavement to traffic.

40-1.03Q(3) Crack Repair

Treat partial depth cracks for JPCP under section 41-3.
If the joints are sealed, repair working cracks by routing and sealing. Use a powered rotary router mounted on wheels, with a vertical shaft and a routing spindle that casters as it moves along the crack. Form a reservoir 3/4 inch deep by 3/8 inch wide in the crack. Equipment must not cause raveling nor spalling.
Treat the contraction joint adjacent to the working crack by either:
1. Epoxy resin under ASTM C 881/C 881M, Type IV, Grade 2
2. Pressure injecting epoxy resin under ASTM C 881/C881M, Type IV, Grade 1

40-1.03Q(4) Smoothness and Friction Correction

Correct pavement that is noncompliant for:
1. Smoothness by grinding under section 42-3
2. Coefficient of friction by grooving or grinding under section 42

Do not start corrective work until:
1. Pavement has cured 10 days
2. Pavement has at least a 550 psi modulus of rupture
3. Your corrective method is authorized

Correct the entire lane width. Begin and end grinding at lines perpendicular to the roadway centerline. The corrected area must have a uniform texture and appearance.
If corrections are made within areas where testing with an IP is required, retest the entire lane length with an IP under sections 40-1.01D(6)(c) and 40-1.01D(7)(b)(vii).
If corrections are made within areas where testing with a 12-foot straightedge is required, retest the corrected area with a straightedge under sections 40-1.01D(6)(c) and 40-1.01D(7)(b)(vii).
Allow 25 days for the Department's coefficient of friction retesting.

40-1.03R–40-1.03U Reserved

40-1.04 PAYMENT

The payment quantity for pavement is based on the dimensions shown.
The deduction for pavement thickness deficiency in each primary area is shown in the following table:

DocuSign Envelope ID: 894511EA-295B-49EB-A393-D26A6837FDD4

Deduction for Thickness Deficiency

Average thickness deficiency (foot)[a]	Deduction($/sq yd)
0.01	0.90
0.02	2.30
0.03	4.10
0.04	6.40
0.05	9.11

[a]Values greater than 0.01 are rounded to the nearest 0.01 foot.

Shoulder rumble strips are measured by the station along each shoulder on which the rumble strips are constructed without deductions for gaps between indentations.
If the initial cores show that dowel bars or tie bars are within alignment tolerances and the Engineer orders more dowel or tie bar coring, the additional cores are paid for as change order work.
The Department does not pay for additional coring to check dowel or tie bar alignment which you request.
If the Engineer accepts a test strip and it remains as part of the paving surface, the test strip is paid for as the type of pavement involved.
If the curvature of a slab affects tie bar spacing and additional tie bars are required, no additional payment is made for the additional tie bars.
Payment for grinding existing pavement is not included in the payment for the type of pavement involved.

40-2 CONTINUOUSLY REINFORCED CONCRETE PAVEMENT

40-2.01 GENERAL

40-2.01A Summary

Section 40-2 includes specifications for constructing CRCP.
Terminal joints include saw cutting, dowel bars, drill and bond dowel bars, support slab, support slab reinforcement, tack coat, and temporary hot mix asphalt.
Expansion joints include polystyrene, support slab, support slab reinforcement, dowel bars, drill and bond dowel bars, and bond breaker.
Wide flange beam terminals include polyethylene foam, support slab, and support slab reinforcement.
Pavement anchors include cross drains, anchor reinforcement, filter fabric, and permeable material.

40-2.01B Definitions

Reserved

40-2.01C Submittals

Reserved

40-2.01D Quality Control and Assurance

40-2.01D(1) General

Reserved

40-2.01D(2) Testing for Coefficient of Thermal Expansion

For field qualification, test coefficient of thermal expansion under AASHTO T 336. The coefficient of thermal expansion must not exceed 6.0 microstrain/degree Fahrenheit.

DocuSign Envelope ID: 894511EA-295B-49EB-A393-D26A6837FDD4

40-2.02 MATERIALS

40-2.02A General

Class 1 permeable material, filter fabric, and slotted plastic pipe cross drain as shown for pavement anchors must comply with section 68-3.

40-2.02B Concrete

Concrete for terminal joints, support slabs, and pavement anchors must comply with section 40-1.02.

40-2.02C Transverse Bar Assembly

Instead of transverse bar and other support devices, you may use transverse bar assemblies to support longitudinal bar. Bar reinforcement and wire must comply with section 40-1.02C.

40-2.02D Wide Flange Beam

Wide flange beams and studs must be either rolled structural steel shapes under ASTM A 36/A 36M or structural steel under ASTM A 572/A 572M.

40-2.02E Joints

Joint seals for wide flange beam terminals must comply with section 51-2.02.
Joint seals for transverse expansion joints must comply with section 51-2.02.
Expanded polystyrene for transverse expansion joints must comply with section 51-2.01B(1).

40-2.03 CONSTRUCTION

40-2.03A General

Reserved

40-2.03B Test Strips

Comply with section 40-1.03C except during the evaluation, the Engineer visually checks reinforcement, dowel and tie bar placement.

40-2.03C Construction Joints

Transverse construction joints must be perpendicular to the lane line. Construct joints to allow for lap splices of the longitudinal bar. Comply with the lap splice lengths shown for CRCP.
Clean construction joint surfaces before placing fresh concrete against the joint surfaces. Remove surface laitance, curing compound, and other foreign materials.

40-2.03D Bar Reinforcement

Place bar reinforcement under section 52-1.03D, except you may request to use plastic chairs. Plastic chairs will only be considered for support directly under the transverse bars. Your request to use plastic chairs must include a sample of the plastic chair, the manufacturer's written recommendations for the applicable use and load capacity, chair spacing, and your calculation for the load on a chair for the area of bar reinforcement sitting on it. Vertical and lateral stability of the bar reinforcement and plastic chairs must be demonstrated during construction of the test strip. Obtain authorization before using the proposed plastic chairs for work after the test strip is accepted.
For transverse bar in a curve with a radius under 2,500 feet, place the reinforcement in a single continuous straight line across the lanes and aligned with the radius point as shown.

40-2.03E Wide Flange Beams

Weld stud ends with an electric arc welder completely fusing the studs to the wide flange beam. Replace studs dislodged in shipping or that can be dislodged with a hammer.

DocuSign Envelope ID: 894511EA-295B-49EB-A393-D26A6837FDD4

40-2.03F Repair and Replacement

40-2.03F(1) General

Requirements for repair of cracks under section 40-1.03Q do not apply to CRCP. High molecular weight methacrylate is not to be applied to cracks in CRCP.

New CRCP will be monitored for 1 year from contract acceptance or relief from maintenance, whichever is less. CRCP that develops raveling areas of 6 inches by 6 inches or greater will require partial depth repair under section 6-3.06. CRCP that develops one or more full-depth transverse cracks with faulting greater than 0.25 inch or one or more full-depth longitudinal cracks with faulting greater 0.50 inch will require full depth repair.

40-2.03F(2) Partial Depth Repair

Partial depth repair must comply with section 41-4 except:

1. Determine a rectangular boundary which extends 6 inches beyond the damaged area. The limits of saw depth must be between 2 inches from the surface to 1/2 inch above the longitudinal bars.
2. If each length of the repair boundaries is equal to or greater than 3 ft, additional reinforcement is needed for the repair area. Submit a plan for authorization before starting the repair.

40-2.03F(3) Full Depth Repair

40-2.03F(3)(a) General

Removal of CRCP must be full depth except for portion of reinforcement to remain. Provide continuity of reinforcement. Comply with section 52-6. Submit a plan for authorization, before starting the repair. Do not damage the base, concrete and reinforcement to remain. Place concrete in the removal area.

40-2.03F(3)(b) Transverse Cracks

Make initial full-depth transverse saw cuts normal to the lane line a distance of 3 feet on each side of the transverse crack.

40-2.03F(3)(c) Longitudinal Cracks

Remove the cracked area normal to the lane line for the full width of the lane a distance of 1 foot beyond the ends of the crack. You may propose alternate limits with your repair plan for authorization.

40-2.03G Reserved

40-2.04 PAYMENT

Not Used

40-3 RESERVED

40-4 JOINTED PLAIN CONCRETE PAVEMENT

40-4.01 GENERAL

40-4.01A Summary

Section 40-4 includes specifications for constructing JPCP.

40-4.01B Definitions

Reserved

40-4.01C Submittals

40-4.01C(1) General

Reserved

40-4.01C(2) Early Age Crack Mitigation System

At least 24 hours before each paving shift, submit the following information as an informational submittal:

DocuSign Envelope ID: 894511EA-295B-49EB-A393-D26A6837FDD4

1. Early age stress and strength predictions
2. Scheduled sawing and curing activities
3. Contingency plan if cracking occurs

40-4.01C(3)–40-4.01C(8) Reserved

40-4.01D Quality Control and Assurance

40-4.01D(1) General

Reserved

40-4.01D(2) Quality Control Plan

The QC plan must include a procedure for identifying transverse contraction joint locations relative to the dowel bars longitudinal center and a procedure for consolidating concrete around the dowel bars.

40-4.01D(3) Early Age Crack Mitigation System

For JPCP, develop and implement a system for predicting stresses and strength during the initial 72 hours after paving. The system must include:

1. Subscription to a weather service to obtain forecasts for wind speed, ambient temperatures, humidity, and cloud cover
2. Portable weather station with an anemometer, temperature and humidity sensors, located at the paving site
3. Early age concrete pavement stress and strength prediction plan
4. Analyzing, monitoring, updating, and reporting the system's predictions

40-4.01D(4)–40-4.01D(9) Reserved

40-4.02 MATERIALS

Not Used

40-4.03 CONSTRUCTION

40-4.03A General

Transverse contraction joints on a curve must be on a single straight line through the curve's radius point. If transverse joints do not align in a curve, drill a full depth 2” diameter hole under ASTM C 42/C 42M where the joint meets the adjacent slab. Fill the hole with joint filler. If joints are not sealed, avoid joint filler material penetration into the joint.

40-4.03B Repair and Replacement

If replacing concrete, saw cut and remove to full depth.

Saw cut full slabs at the longitudinal and transverse joints. Saw cut partial slabs at joints and at locations determined by the Engineer. Saw cut must be vertical.

After lifting the slab, paint the cut ends of dowels and tie bars.

Construct transverse and longitudinal construction joints between the new slab and existing concrete. If slabs are constrained at both longitudinal edges by existing pavement, use dowel bars instead of tie bars. For longitudinal joints, offset dowel bar holes from original tie bars by 3 inches. For transverse joints, offset dowel bar holes from the original dowel bar by 3 inches.

Drill and bond bars to the existing concrete. Comply with section 41-10. Clean the faces of joints and underlying base from loose material and contaminants. Coat the faces with a double application of pigmented curing compound under section 28-2.03F. For partial slab replacements, place preformed sponge rubber expansion joint filler at new transverse joints under ASTM D 1752. Place concrete in the removal area.

DocuSign Envelope ID: 894511EA-295B-49EB-A393-D26A6837FDD4

40-4.03C–40-4.03G Reserved

40-4.04 PAYMENT

Not Used

40-5 JOINTED PLAIN CONCRETE PAVEMENT WITH RAPID STRENGTH CONCRETE

Reserved

40-6–40-15 RESERVED

^^

41 CONCRETE PAVEMENT REPAIR

04-18-14

Replace the headings and paragraphs in section 41 with:

07-19-13

41-1 GENERAL

41-1.01 GENERAL

41-1.01A Summary

Section 41-1 includes general specifications for repairing concrete pavement.
Dowel bars must comply with section 40-1.

41-1.01B Definitions

Reserved

41-1.01C Submittals

At least 15 days before delivering fast-setting concrete, polyester resin binder, or bonding agent to the job site, submit the manufacturer's recommendations, instructions, and MSDS. Notify the Engineer if polyester resin binder will be stored in containers over 55 gallons.

41-1.01D Quality Control and Assurance

41-1.01D(1) General

Before using polyester concrete, allow 14 days for sampling and testing of the polyester resin binder.

41-1.01D(2) Reserved

41-1.02 MATERIALS

41-1.02A General

Water for washing aggregates, mixing concrete, curing, and coring must comply with section 90-1.02D.
Use the minimum amount of water to produce workable concrete and comply with the manufacturer's instructions.

41-1.02B Fast-Setting Concrete

Fast-setting concrete must be one of the following:

1. Magnesium phosphate concrete that is either:
   - 1.1. Single component water activated
   - 1.2. Dual component with a prepackaged liquid activator
2. Modified high-alumina based concrete
3. Portland cement based concrete

Fast-setting concrete must be stored in a cool and dry environment.

DocuSign Envelope ID: 894511EA-295B-49EB-A393-D26A6837FDD4

If used, the addition of retarders must comply with the manufacturer's instructions.
You may use any accelerating chemical admixtures complying with ASTM C494/C494M, Type C and section 90-1.02E.
Fast-setting concrete properties must have the values shown in the following table:

Fast-Setting Concrete

Property	Test method	Value
Compressive strength[a] (psi, min)		
at 3 hours	California Test 551	3,000
at 24 hours	California Test 551	5,000
Flexural strength[a] (psi, min, at 24 hours)	California Test 551	500
Bond strength[a] (psi, min, at 24 hours)		
Saturated surface dry concrete	California Test 551	300
Dry concrete	California Test 551	400
Water absorption (%, max)	California Test 551	10
Abrasion resistance[a] (g, max, at 24 hours)	California Test 550	25
Drying shrinkage (%, max, at 4 days)	ASTM C596	0.13
Water soluble chlorides[b] (%, max, by weight)	California Test 422	0.05
Water soluble sulfates[b] (%, max, by weight)	California Test 417	0.25
Thermal stability (%, min)	California Test 553	90

[a]Perform test with aggregate filler if used.
[b]Test must be performed on a cube specimen, fabricated under California Test 551, cured at least 14 days, and then pulverized to 100% passing the no. 50 sieve.

Aggregate filler may be used to extend prepackaged concrete. Aggregate filler must:

1. Be clean and uniformly rounded.
2. Have a moisture content of 0.5-percent by weight or less when tested under California Test 226.
3. Comply with sections 90-1.02C(2) and 90-1.02C(3).
4. Not exceed 50 percent of the concrete volume or the maximum recommended by the fast-setting concrete manufacturer, whichever is less.

When tested under California Test 202, aggregate filler must comply with the grading in the following table:

Aggregate Filler Grading

Sieve size	Percentage passing
3/8 inch	100
No. 4	50–100
No. 16	0–5

41-1.02C Polyester Concrete

Polyester concrete consists of polyester resin binder and dry aggregate. The polyester resin binder must be an unsaturated isophthalic polyester-styrene copolymer.
Polyester resin binder properties must have the values shown in the following table:

DocuSign Envelope ID: 894511EA-295B-49EB-A393-D26A6837FDD4

Polyester Resin Binder

Property	Test method	Value
Viscosity[a] (Pa·s) RVT, No. 1 spindle, 20 RPM at 77 °F	ASTM D2196	0.075–0.200
Specific gravity[a] (77 °F)	ASTM D1475	1.05–1.10
Elongation (%, min) Type I specimen, 0.25 ± 0.03 inch thick Speed of testing = 0.45 inch/minute Condition 18/25/50+5/70: T—23/50	ASTM D638 ASTM D618	35
Tensile strength (psi, min) Type I specimen, 0.25 ± 0.03 inch thick Speed of testing = 0.45 inch/minute Condition 18/25/50+5/70: T—23/50	ASTM D638 ASTM D618	2,500
Styrene content[a] (%, by weight)	ASTM D2369	40–50
Silane coupler (%, min, by weight of polyester resin binder)	--	1.0
PCC saturated surface-dry bond strength at 24 hours and 70 ± 2 °F (psi, min)	California Test 551	500
Static volatile emissions[a] (g/sq m, max)	South Coast Air Quality Management District, Method 309-91[b]	60

[a]Perform the test before adding initiator.
[b]For the test method, go to:
http://www.aqmd.gov/tao/methods/lab/309-91.pdf

Silane coupler must be an organosilane ester, gamma-methacryloxypropyltrimethoxysilane. Promoter must be compatible with suitable methyl ethyl ketone peroxide (MEKP) and cumene hydroperoxide (CHP) initiators.

Aggregate for polyester concrete must comply with section 90-1.02C(1), 90-1.02C(2), and 90-1.02C(3).

When tested under California Test 202, the combined aggregate grading must comply with one of the gradations in the following table:

Combined Aggregate Grading

Sieve size	Percentage passing		
	A	B	C
1/2"	100	100	100
3/8"	83–100	100	100
No. 4	65–82	62–85	45–80
No. 8	45–64	45–67	35–67
No. 16	27–48	29–50	25–50
No. 30	12–30	16–36	15–36
No. 50	6–17	5–20	5–20
No. 100	0–7	0–7	0–9
No. 200	0–3	0–3	0–6

Aggregate retained on the no. 8 sieve must have a maximum of 45 percent crushed particles under California Test 205. Fine aggregate must be natural sand.

The weighted average absorption must not exceed 1 percent when tested under California Tests 206 and 207.

You may submit an alternative grading or request to use manufactured sand as fine aggregate but 100 percent of the combined grading must pass the 3/8 inch sieve. Allow 21 days for authorization.

DocuSign Envelope ID: 894511EA-295B-49EB-A393-D26A6837FDD4

Polyester concrete must have a minimum compressive strength of 1250 psi at 3 hours and 30 minutes under California Test 551 or ASTM C109.

41-1.02D Bonding Agent

Bonding agent must comply with the concrete manufacturer's recommendations.

41-1.02E Temporary Pavement Structure

Temporary pavement structure consists of RSC or aggregate base with HMA. RSC not conforming to the specifications may serve as temporary pavement structure if:

1. The modulus of rupture is at least 200 psi before opening to traffic
2. RSC thickness is greater than or equal to the existing concrete pavement surface layer
3. RSC is replaced during the next paving shift

Aggregate base for temporary pavement structure must comply with the 3/4-inch maximum grading specified in section 26-1.02B.

04-18-14

HMA must comply with the specifications for minor HMA in section 39.

07-19-13

41-1.02F Reserved

41-1.03 CONSTRUCTION

41-1.03A General

Repair only the portion of pavement where the work will be completed during the same lane closure. If removal is required, remove only the portion of pavement where the repair will be completed during the same traffic closure. Completion of concrete repair includes curing until the concrete attains the specified minimum properties required before opening the repaired pavement to traffic.

If you fail to complete the concrete pavement repair during the same lane closure, construct temporary pavement before opening the lane to traffic.

Before starting repair work, except saw cutting: the equipment, materials, and personnel for constructing temporary pavement structure must be at the job site or an approved location. If HMA can be delivered to the job site within 1 hour, you may request 1-hour delivery as an alternative to having the HMA at the job site.

Maintain the temporary pavement structure and replace it as a first order of work as soon as you resume concrete pavement repair work.

After removing temporary pavement structure, you may stockpile that aggregate base at the job site and reuse it for temporary pavement structure.

41-1.03B Mixing and Applying Bonding Agent

Mix and apply the bonding agent at the job site under the manufacturer's instructions and in small quantities.

Apply bonding agent after cleaning the surface and before placing concrete.

Apply a thin, even coat of bonding agent with a stiff bristle brush until the entire repair surface is scrubbed and coated with bonding agent.

41-1.03C Mixing Concrete

41-1.03C(1) General

Mix concrete in compliance with the manufacturer's instructions. For repairing spalls, mix in a small mobile drum or paddle mixer. Comply with the manufacturer's recommended limits for the quantity of aggregate filler, water, and liquid activator.

DocuSign Envelope ID: 894511EA-295B-49EB-A393-D26A6837FDD4

Mix the entire contents of prepackaged dual-component magnesium phosphate concrete as supplied by the manufacturer. Use the full amount of each component and do not add water to dual-component magnesium phosphate concrete.
Magnesium phosphate concrete must not be mixed in containers or worked with tools containing zinc, cadmium, aluminum, or copper.
Modified high-alumina based concrete must not be mixed in containers or worked with tools containing aluminum.

41-1.03C(2) Polyester Concrete

When mixing with resin, the moisture content of the combined aggregate must not exceed 1/2 of the average aggregate absorption when tested under California Test 226.
Proportion the polyester resin and aggregate to produce a mixture with suitable workability for the intended work. Only a minimal amount of resin may rise to the surface after finishing.

41-1.03D Placing Concrete

The pavement surface temperature must be at least 40 degrees F before placing concrete. You may propose methods to heat the surfaces.
Place magnesium phosphate concrete on a dry surface.
Place portland cement and modified high-alumina concrete on surfaces treated with a bonding agent recommended by the concrete manufacturer. If no bonding agent is recommended by the manufacturer, place concrete on damp surfaces that are not saturated.
Do not retemper concrete. Use dry finishing tools cleaned with water before working the concrete.

41-1.03E Curing Concrete

Cure concrete under the manufacturer's instructions. When curing compound is used, comply with section 90-1.03B for curing compound no. 1 or 2.

41-1.03F Reserved

41-1.04 PAYMENT

Not Used

41-2 SUBSEALING AND JACKING

41-2.01 GENERAL

41-2.01A Summary

Section 41-2 includes specifications for filling voids under existing concrete pavement.

41-2.01B Definitions

Reserved

41-2.01C Submittals

Submit shipping invoices with packaged or bulk fly ash and cement.
Before grouting activities begin, submit a proposal for the materials to be used. Include authorized laboratory test data for the grout indicating:

1. Time of initial setting under ASTM C266.
2. Compressive strength results at 1, 3, and 7 days for 10, 12, and 14-second grout efflux times.

If requesting a substitution of grout materials, submit a proposal that includes test data.

41-2.01D Quality Control and Assurance

Reserved

41-2.02 MATERIALS

41-2.02A General

Reserved

DocuSign Envelope ID: 894511EA-295B-49EB-A393-D26A6837FDD4

41-2.02B Grout

Grout must consist of Type II portland cement, fly ash, and water. Use from 2.4 to 2.7 parts fly ash to 1 part portland cement by weight. Use enough water to produce the following grout efflux times determined under California Test 541, Part D:

1. From 10 to 16 seconds for subsealing
2. From 10 to 26 seconds for jacking

Cement for grout must comply with the specifications for Type II portland cement in section 90-1.02B(2).

Fly ash must comply with AASHTO M 295, Class C or Class F. Fly ash sources must be on the Authorized Material List.

You may use chemical admixtures and calcium chloride. Chemical admixtures must comply with section 90-1.02E(2). Calcium chloride must comply with ASTM D98.

Test grout compressive strength under California Test 551, Part 1 at 7-days with 12 seconds efflux time. Follow the procedures for moist cure. The 7-day compressive strength must be at least 750 psi.

41-2.02C Mortar

Mortar must be a prepackaged fast-setting mortar that complies with ASTM C928.

41-2.02D Reserved

41-2.03 CONSTRUCTION

41-2.03A General

Drill holes in the pavement, inject grout, plug the holes, and finish the holes with mortar.

Drill holes through the pavement and underlying base to a depth from 15 to 18 inches below the pavement surface. The hole diameter must match the fitting for the grout injecting equipment.

41-2.03B Injecting Grout

41-2.03B(1) General

Inject grout within 2 days of drilling holes.

Immediately before injecting grout, clean the drilled holes with water at a minimum pressure of 40 psi. The cleaning device must have at least 4 jets that direct water horizontally at the slab-base interface.

Do not inject grout if the atmospheric or subgrade temperature is below 40 degrees F. Do not inject grout in inclement weather. If water is present in the holes, obtain the Engineer's authorization before injecting grout.

Do not inject grout until at least 2 consecutive slabs requiring subsealing are drilled ahead of the grouting activities.

The grout plant must have a positive displacement cement injection pump and a high-speed colloidal mixer capable of operating from 800 to 2,000 rpm. The injection pump must sustain 150 psi if pumping grout with a 12-second efflux time. A pressure gauge must be located immediately adjacent to the supply valve of the grout hose supply valve and positioned for easy monitoring.

Before mixing, weigh dry cement and fly ash if delivered in bulk. If the materials are packaged, each container must weigh the same.

Introduce water to the mixer through a meter or scale.

Inject grout under pressure until the voids under the pavement slab are filled. The injection nozzle must not leak. Do not inject grout if the nozzle is below the bottom of the slab. Inject grout 1 hole at a time.

Stop injecting grout in a hole if either:

DocuSign Envelope ID: 894511EA-295B-49EB-A393-D26A6837FDD4

1. Grout does not flow under a sustained pump gauge pressure of 150 psi after 7 seconds and there is no indication the slab is moving.
2. Injected grout rises to the surface at any joint or crack, or flows into an adjacent hole.

Dispose of unused grout within 1 hour of mixing.

41-2.03B(2) Subsealing

If a slab raises more than 1/16 inch due to grout injection, stop injecting grout in that hole.

41-2.03B(3) Jacking

The positive displacement pump used for grout injection must be able to provide a sustained gauge pressure of 200 psi. Gauge pressures may be from 200 to 600 psi for brief periods to start slab movement.

You may add additional water to initiate pressure injection of grout. Do not reduce the grout efflux time below 10 seconds.

Raise the slabs uniformly. Use string lines to monitor the pavement movement.

Do not move adjacent slabs not specified for pavement jacking. If you move adjacent slabs, correct the grade within the tolerances for final pavement elevation.

41-2.03B(4) Finishing

Immediately after removing the injection nozzle, plug the hole with a round, tapered wooden plug. Do not remove plugs until adjacent holes are injected with grout and no grout surfaces through previously injected holes.

After grouting, remove grout from drilled holes at least 4 inches below the pavement surface. Clean holes and fill with mortar. Finish filled holes flush with the pavement surface.

41-2.03B(5) Tolerances

The final pavement elevation must be within 0.01 foot of the required grade. If the final pavement elevation is between 0.01 and 0.10 foot higher than the required grade, grind the noncompliant pavement surface under section 42 to within 0.01 foot of the required grade.

If the final pavement elevation is higher than 0.10 foot from the required grade, remove and replace the noncompliant pavement under section 41-9.

41-2.04 PAYMENT

The payment quantity for subsealing is calculated by adding the dry weight of cement and fly ash used for the placed grout. The payment quantity for jacking is calculated by adding the dry weight of cement and fly ash used for the placed grout.

The Department does not pay for wasted grout.

The Department does not adjust the unit price for an increase or decrease in the subsealing quantity.

The Department does not adjust the unit price for an increase or decrease in the jacking quantity.

41-3 CRACK TREATMENT

41-3.01 GENERAL

41-3.01A Summary

Section 41-3 includes specifications for applying high-molecular-weight methacrylate (HMWM) to concrete pavement surface cracks that do not extend the full slab depth.

41-3.01B Definitions

Reserved

41-3.01C Submittals

41-3.01C(1) General

Submit HMWM samples 20 days before use.

DocuSign Envelope ID: 894511EA-295B-49EB-A393-D26A6837FDD4

If sealant is to be removed, submit the proposed removal method at least 7 days before sealant removal. Do not remove sealant until the proposed sealant removal method is authorized.

41-3.01C(2) Public Safety and Placement Plans

Before starting crack treatment, submit a public safety plan for HMWM and a placement plan for construction activity as shop drawings.

The public safety and placement plans must identify the materials, equipment, and methods to be used.

In the public safety plan, include the MSDS for each component of HMWM and details for:

1. Shipping
2. Storage
3. Handling
4. Disposal of residual HMWM and containers

If the project is in an urban area adjacent to a school or residence, the public safety plan must also include an airborne emissions monitoring plan prepared by a CIH certified in comprehensive practice by the American Board of Industrial Hygiene. Submit a copy of the CIH's certification. The CIH must monitor the emissions at a minimum of 4 points including the mixing point, the application point, and the point of nearest public contact. At work completion, submit a report by the industrial hygienist with results of the airborne emissions monitoring plan.

The placement plan must include:

1. Crack treatment schedule including coefficient of friction testing
2. Methods and materials including:
   - 2.1. Description of equipment for applying HMWM
   - 2.2. Description of equipment for applying sand
   - 2.3. Gel time range and final cure time for resin

Revise rejected plans and resubmit. With each plan rejection, the Engineer gives revision directions including detailed comments in writing. The Engineer notifies you of a plan's acceptance or rejection within 2 weeks of receiving that plan.

41-3.01C(3) Reserved

41-3.01D Quality Control and Assurance

41-3.01D(1) General

Use test tiles to evaluate the HMWM cure time. Coat at least one 4 by 4 inch smooth glazed tile for each batch of HMWM. Place the coated tile adjacent to the area being treated. Do not apply sand to the test tiles.

Use the same type of crack treatment equipment for testing and production.

41-3.01D(2) Test Area

Before starting crack treatment, treat a test area of at least 500 square feet within the project limits at a location accepted by the Engineer. Use test areas outside the traveled way if available.

Treat the test area under weather and pavement conditions similar to those expected during crack treatment production.

The Engineer evaluates the test area based on the acceptance criteria. Do not begin crack treatment until the Engineer accepts the test area.

41-3.01D(3) Reserved

41-3.01D(4) Acceptance Criteria

The Engineer accepts a treated area if:

1. Corresponding test tiles are dry to the touch
2. Treated surface is tack-free and not oily

DocuSign Envelope ID: 894511EA-295B-49EB-A393-D26A6837FDD4

3. Sand cover adheres enough to resist hand brushing
4. Excess sand is removed
5. Coefficient of friction is at least 0.30 when tested under California Test 342

41-3.02 MATERIALS

HMWM consists of compatible resin, promoter, and initiator. HMWM resin may be prepromoted by mixing promoter and resin together before filling containers. Identify prepromoted resin on the container label.

Adjust the gel time to compensate for temperature changes throughout the application.

HMWM resin properties must have the following values:

Property	Test method	Value
Viscosity [a] (cP, max, Brookfield RVT with UL adapter, 50 RPM at 77 °F)	ASTM D2196	25
Specific gravity[a] (min, at 77 °F)	ASTM D1475	0.90
Flash point [a] (°F, min)	ASTM D3278	180
Vapor pressure[a] (mm Hg, max, at 77 °F)	ASTM D323	1.0
Tack-free time (minutes, max, at 77 °F)	Specimen prepared under California Test 551	400
Volatile content[a] (%, max)	ASTM D2369	30
PCC saturated surface-dry bond strength (psi, min, at 24 hours and 77 ± 2 °F)	California Test 551	500

[a]Perform the test before adding initiator.

Sand must be commercial quality dry blast sand. At least 95 percent of the sand must pass the no. 8 sieve and at least 95 percent must be retained on the no. 20 sieve when tested under California Test 202.

41-3.02D Reserved

41-3.03 CONSTRUCTION

41-3.03A General

Before applying HMWM, clean the pavement surface by abrasive blasting and blow loose material from visible cracks with high-pressure air. Remove concrete curing seals from the pavement to be treated. The pavement must be dry when blast cleaning is performed. If the pavement surface becomes contaminated before applying the HMWM, clean the pavement surface by abrasive blasting.

If performing abrasive blasting within 10 feet of a lane occupied by traffic, operate abrasive blasting equipment with a concurrently operating vacuum attachment.

During pavement treatment, protect pavement joints, working cracks, and surfaces not being treated.

The equipment applying HMWM must combine the components by either static in-line mixers or by external intersecting spray fans. The pump pressure at the spray bars must not cause atomization. Do not use compressed air to produce the spray. Use a shroud to enclose the spray bar apparatus.

You may apply HMWM manually to prevent overspray onto adjacent traffic. If applying resin manually, limit the batch quantity of HMWM to 5 gallons.

DocuSign Envelope ID: 894511EA-295B-49EB-A393-D26A6837FDD4

Apply HMWM at a rate of 90 square feet per gallon. The prepared area must be dry and the surface temperature must be from 50 to 100 degrees F while applying HMWM. Do not apply HMWM if the ambient relative humidity is more than 90 percent.
Protect existing facilities from HMWM. Repair or replace existing facilities contaminated with HMWM at your expense.
Flood the treatment area with HMWM to penetrate the pavement and cracks. Apply HMWM within 5 minutes after complete mixing. Mixed HMWM viscosity must not increase. Redistribute excess material with squeegees or brooms within 10 minutes of application. Remove excess material from tined grooves.
Wait at least 20 minutes after applying HMWM before applying sand. Apply sand at a rate of approximately 2 pounds per square yard or until refusal. Remove excess sand by vacuuming or sweeping.
Do not allow traffic on the treated surface until:

1. Treated surface is tack-free and non-oily
2. Sand cover adheres enough to resist hand brushing
3. Excess sand is removed
4. Coefficient of friction is at least 0.30 determined under California Test 342

41-3.04 PAYMENT

Not Used

41-4 SPALL REPAIR

41-4.01 GENERAL

Section 41-4 includes specifications for repairing spalls in concrete pavement.

41-4.02 MATERIALS

Repair spalls using polyester concrete with a bonding agent. The bonding agent must comply with the requirements for HMWM in section 41-3.02 except tack-free time requirements do not apply and the HMWM must not contain wax.
Form board must be corrugated cardboard with a 6-mil polyethylene covering.

41-4.03 CONSTRUCTION

41-4.03A General

Prepare spall areas by removing concrete and cleaning. Use a form board to provide compression relief at joints and cracks.
After completing spall repairs do not allow traffic on the repairs for at least 2 hours after the time of final setting under ASTM C403/403M.

41-4.03B Remove Pavement

The Engineer determines the rectangular limits of unsound concrete pavement. Before removing pavement, mark the saw cut lines and spall repair area on the pavement surface.
Do not remove pavement until the Engineer verbally authorizes the saw cut area.
Use a power-driven saw with a diamond blade.
Remove pavement as shown and:

1. From the center of the repair area towards the saw cut
2. To the full saw cut depth
3. At least 2 inches beyond the saw cut edge to produce a rough angled surface

Produce a rough surface by chipping or other removal methods that do not damage the pavement remaining in-place. Completely remove any saw overcuts. Pneumatic hammers used for concrete removal must weigh 15 lbs or less.

DocuSign Envelope ID: 894511EA-295B-49EB-A393-D26A6837FDD4

If you damage concrete pavement outside the removal area, enlarge the area to remove the damaged pavement.
If dowel bars are exposed during removal, remove concrete from the exposed surface and cover with duct tape.

41-4.03C Cleaning

After pavement has been removed, clean the exposed faces of the concrete by:

1. Sand or water blasting. Water blasting equipment must be capable of producing a blast pressure of 3,000 to 6,000 psi.
2. Blowing the exposed concrete area with compressed air free of moisture and oil to remove debris after blasting. Air compressors must deliver air at a minimum of 120 cfm and develop 90 psi of nozzle pressure.

41-4.03D Form Board Installation

After cleaning, place the form board to match the existing joint or crack alignment. Extend the form board at least 3 inches beyond each end of the repair and at least 1 inch deeper than the repair. Remove the form board before sealing joints or cracks.

41-4.03E–41-4.03I Reserved

41-4.04 PAYMENT

Payment is calculated based on the authorized saw cut area.
The Department does not adjust the unit price for an increase or decrease in the spall repair quantity.

41-5 JOINT SEALS

41-5.01 GENERAL

41-5.01A Summary

Section 41-5 includes specifications for sealing concrete pavement joints or replacing existing concrete pavement joint seals. Pavement joints include isolation joints.

41-5.01B Definitions

Reserved

41-5.01C Submittals

At least 15 days before delivery to the job site, submit a certificate of compliance, MSDS, manufacturer's recommendations, and instructions for storage and installation of:

1. Liquid joint sealant.
2. Backer rods. Include the manufacturer data sheet verifying compatibility with the liquid joint sealant.
3. Preformed compression joint seal. Include the manufacturer data sheet used to verify the seal for the joint dimensions shown.
4. Lubricant adhesive.

Asphalt rubber joint sealant containers must comply with ASTM D6690. Upon delivery of asphalt rubber joint sealant to the job site, submit a certified test report for each lot based on testing performed within 12 months.
Submit a work plan for removing pavement and joint materials. Allow 10 days for authorization. Include descriptions of the equipment and methods for removal of existing pavement and joint material.

DocuSign Envelope ID: 894511EA-295B-49EB-A393-D26A6837FDD4

41-5.01D Quality Control and Assurance

41-5.01D(1) General

Before sealing joints, arrange for a representative from the manufacturer to provide training on cleaning and preparing the joint and installing the liquid joint sealant or preformed compression joint seal. Do not seal joints until your personnel and the Department's personnel have been trained.
The Engineer accepts joint seals based on constructed dimensions and visual inspection of completed seals for voids.

41-5.01D(2) Reserved

41-5.02 MATERIALS

41-5.02A General

Use the type of seal material described.
Silicone or asphalt rubber joint sealant must not bond or react with the backer rod.

41-5.02B Silicone Joint Sealant

Silicone joint sealant must be on the Authorized Material List.

41-5.02C Asphalt Rubber Joint Sealant

Asphalt rubber joint sealant must:

1. Be paving asphalt mixed with not less than 10 percent ground rubber by weight. Ground rubber must be vulcanized or a combination of vulcanized and devulcanized materials that pass a no. 8 sieve.
2. Comply with ASTM D6690 for Type II.
3. Be capable of melting at a temperature below 400 degrees F and applied to cracks and joints.

41-5.02D Backer Rods

Backer rods must:

1. Comply with ASTM D5249:
   - 1.1. Type 1 for asphalt rubber joint sealant
   - 1.2. Type 1 or Type 3 for silicone joint sealant
2. Be expanded, closed-cell polyethylene foam
3. Have a diameter at least 25 percent greater than the saw cut joint width

41-5.02E Preformed Compression Joint Seals

Preformed compression joint seals must:

1. Comply with ASTM D2628
2. Have 5 or 6 cells, except seals 1/2 inch wide or less may have 4 cells

Lubricant adhesive used to install seals must comply with ASTM D2835.

41-5.02F–41-5.02K Reserved

41-5.03 CONSTRUCTION

41-5.03A General

If joint sealing is described for new concrete pavement, do not start joint sealing activities until the pavement has been in place for at least 7 days. Seal new concrete pavement joints at least 7 days after concrete pavement placement if shown.
Remove existing pavement and joint material by sawing, rectangular plowing, cutting, or manual labor. Saw cut the reservoir before cleaning the joint. Use a power-driven saw with a diamond blade.
If you damage a portion of the pavement to remain in place, repair the pavement under section 41-4.

DocuSign Envelope ID: 894511EA-295B-49EB-A393-D26A6837FDD4

41-5.03B Joint Cleaning

41-5.03B(1) General

Clean the joint after removal and any repair is complete before installing joint seal material. Cleaning must be completed no more than 4 hours before installing backer rods, liquid joint seal, or preformed compression seals using the following sequence:

1. Removing debris
2. Drying
3. Sandblasting
4. Air blasting
5. Vacuuming

Clean in 1 direction to minimize contamination of surrounding areas.

41-5.03B(2) Removing Debris

Remove debris including dust, dirt, and visible traces of old sealant from the joint after sawing, plowing, cutting, or manual removal. Do not use chemical solvents to wash the joint.

41-5.03B(3) Drying

After removing debris, allow the reservoir surfaces to dry or remove moisture and dampness at the joint with compressed air that may be moderately hot.

41-5.03B(4) Sandblasting

After the joint is dry, sandblast the reservoir to remove remaining residue using a 1/4-inch diameter nozzle and 90 psi minimum pressure. Do not sandblast straight into the reservoir. Angle the sandblasting nozzle within 1 to 2 inches from the concrete and make at least 1 pass to clean each reservoir face.

41-5.03B(5) Air Blasting

After sandblasting, air blast the reservoir to remove sand, dirt, and dust 1 hour before sealing the joint. Use compressed air free of oil and moisture delivered at a minimum rate of 120 cfm and 90 psi nozzle pressure.

41-5.03B(6) Vacuuming

After air blasting, use a vacuum sweeper to remove debris and contaminants from the pavement surfaces surrounding the joint.

41-5.03B(7) Reserved

41-5.03C Installing Liquid Joint Sealant

Where backer rods are shown, place the rods before installing liquid joint sealant. Place backer rods under the manufacturer's instructions unless otherwise specified. The pavement and reservoir surfaces must be dry and the ambient air temperature must be at least 40 degrees F and above the dew point. The reservoir surface must be free of residue or film. Do not puncture the backer rod.

Immediately after placing the backer rod, install liquid joint sealant under the manufacturer's instructions unless otherwise specified. Before installing, demonstrate that fresh liquid sealant is ejected from the nozzle free of cooled or cured material. For asphalt rubber joint sealant, the pavement surface temperature must be at least 50 degrees F before installing.

Pump liquid joint sealant through a nozzle sized for the width of the reservoir so that liquid joint sealant is placed directly onto the backer rod. The installer must draw the nozzle toward his body and extrude liquid joint sealant evenly. Liquid joint sealant must maintain continuous contact with the reservoir walls during extrusion.

After placing liquid joint sealant, recess it to the depth shown within 10 minutes of installation and before a skin begins to form.

DocuSign Envelope ID: 894511EA-295B-49EB-A393-D26A6837FDD4

After each joint is sealed, remove excess liquid joint sealant on the pavement surface. Do not allow traffic over the sealed joints until the liquid joint sealant is set, tack free, and firm enough to prevent embedment of roadway debris.

41-5.03D Installing Preformed Compression Joint Seals

Install preformed compression joint seals using lubricant adhesive as shown and under the manufacturer's instructions.

Install longitudinal seals before transverse seals. Longitudinal seals must be continuous except splicing is allowed at intersections with transverse seals. Transverse seals must be continuous for the entire transverse length of concrete pavement except splices are allowed for widening and staged construction. With a sharp instrument, cut across the longitudinal seal at the intersection with transverse construction joints. If the longitudinal seal does not relax enough to properly install the transverse seal, trim the longitudinal seal to form a tight seal between the 2 joints.

If splicing is authorized, comply with the manufacturer's instructions.

Use a machine specifically designed for preformed compression joint seal installation. The machine must install the seal:

1. To the specified depth
2. To make continuous contact with the joint walls
3. Without cutting, nicking, or twisting the seal
4. Without stretching the seal more than 4 percent

Cut preformed compression joint seal material to the exact length of the pavement joint to be sealed. The Engineer measures this length. After you install the preformed compression joint seal, the Engineer measures the excess length of material at the joint end. The Engineer divides the excess length by the measured cut length to determine the stretch percentage.

Seals must be compressed from 30 to 50 percent of the joint width when complete in place.

41-5.03E Reserved

41-5.04 PAYMENT

Not Used

41-6 CRACK AND SEAT

41-6.01 GENERAL

41-6.01A Summary

Section 41-6 includes specifications for cracking, seating, and preparing the surface of existing concrete pavement.

41-6.01B Definitions

Reserved

41-6.01C Submittals

Submit each core in a plastic bag or tube for acceptance at the time of sampling. Mark each core with a location description.

41-6.01D Quality Control and Assurance

41-6.01D(1) General

If cracking is noncompliant:

1. Stop crack and seat work
2. Modify your equipment and procedures and crack the noncompliant pavement again
3. Construct another test section
4. Take additional core samples to verify compliance
5. Construct an inspection strip if the concrete pavement has HMA on the surface

DocuSign Envelope ID: 894511EA-295B-49EB-A393-D26A6837FDD4

41-6.01D(2) Test Section

The Engineer determines and marks a test section up to 1000 square feet within the crack and seat area shown. Construct the test section and obtain the Engineer's verbal authorization before starting crack and seat work.

Immediately before cracking the test section, apply water to the pavement surface so that cracking can be readily evaluated. Crack the test section and vary impact energy and striking patterns to verify your procedure.

41-6.01D(3) Coring

Drill cores at least 6 inches in diameter under ASTM C42 to verify cracking in the Engineer's presence. Take at least 2 cores per test section and 1 core per lane mile for each pavement cracking machine used. The Engineer determines the core locations.

41-6.01D(4) Reserved

41-6.02 MATERIALS

41-6.02A General

Use fast-setting or polyester concrete to fill core holes.

41-6.03 CONSTRUCTION

41-6.03A Cracking

Crack existing concrete pavement using the procedures and equipment from the authorized test section.

Do not allow flying debris during cracking operations.

Crack existing concrete pavement into segments that nominally measure 6 feet transversely by 4 feet longitudinally. If the existing pavement is already cracked into segments, crack it into equal-sized square or rectangular pieces that nominally measure not more than 6 feet transversely and from 3 to 5 feet longitudinally. Do not impact the pavement within 1 foot of another break line, pavement joint, or edge of pavement.

Cracks must be vertical, continuous, and penetrate the full depth of pavement. Cracks must be within 6 inches of vertical along the full depth of pavement. Do not cause surface spalling over 0.10-foot deep or excessive shattering of the pavement or base.

Cracking equipment must impact the pavement with a variable force in a controlled location. Do not use unguided free-falling weights such as "headache balls."

If the concrete pavement has no more than 0.10 foot of asphalt concrete on the surface, you may crack the pavement without removing the asphalt concrete. After cracking, construct an inspection strip by removing at least 500 square feet of asphalt concrete at a location determined by the Engineer. Construct additional inspection strips to demonstrate compliance where ordered by the Engineer.

After cracking, allow public traffic on the cracked or initial pavement layer for no more than 15 days.

41-6.03B Seating

Seat cracked concrete by making at least 5 passes over the cracked concrete with either:

04-18-14

1. Oscillating type pneumatic-tired roller at least 4 feet wide. Pneumatic tires must be of equal size, diameter, type, and ply. The tires must be inflated to 60 psi minimum and maintained so that the air pressure does not vary more than 5 psi. The roller's gross static weight must be at least 15 tons.

07-19-13

2. Vibratory pad-foot roller exerting a dynamic centrifugal force of at least 10 tons

A pass is 1 movement of a roller in either direction at 5 mph or less.

DocuSign Envelope ID: 894511EA-295B-49EB-A393-D26A6837FDD4

After all segments have been seated, clean loose debris from joints and cracks using compressed air free of moisture and oil.
Reseat any segment of cracked pavement that has not been overlaid within 24 hours of seating.

41-6.03C Surface Preparation

Before opening cracked and seated pavement to traffic or overlaying:

04-18-14

1. Fill joints, cracks, and spalls wider than 3/4 inch and deeper than 1 inch by applying tack coat and placing minor HMA under section 39. Use the no. 4 gradation.

07-19-13

2. Remove all loose debris and sweep the pavement.

41-6.03D Reserved

41-6.04 PAYMENT

Crack and seat existing concrete pavement is measured from the area of pavement cracked and seated. No deduction is made for existing cracked segments. The Department does not pay for HMA used to fill joints, cracks, and spalls.

41-7 TRANSITION TAPER

41-7.01 GENERAL

Section 41-7 includes specifications for constructing transition tapers in existing pavement.

41-7.02 MATERIALS

Not Used

41-7.03 CONSTRUCTION

Construct transition tapers by either grinding or removing and replacing the existing concrete. Do not allow flying debris during the construction of tapers.
Grinding must comply with section 42.
Replacement concrete must comply with section 41-9 except place concrete to the taper level shown and finish the surface with a coarse broom.

04-18-14

If the transition taper will be overlaid with HMA that is not placed before opening to traffic and there is a grade difference of more than 0.04 foot, construct a temporary taper by placing minor HMA that complies with section 39. Remove the temporary HMA taper before constructing the transition taper.

07-19-13

41-7.04 PAYMENT

Pavement transition tapers are measured using the dimensions shown. The Department does not pay for temporary HMA tapers.

41-8 DOWEL BAR RETROFIT

Reserved

41-9 INDIVIDUAL SLAB REPLACEMENT WITH RAPID STRENGTH CONCRETE

41-9.01 GENERAL

41-9.01A Summary

Section 41-9 includes specifications for removing existing concrete pavement and constructing individual slab replacement with rapid strength concrete (ISR—RSC).

41-9.01B Definitions

concrete raveling: Disintegration of the concrete surface layer from aggregate loss.

DocuSign Envelope ID: 894511EA-295B-49EB-A393-D26A6837FDD4

early age: Any age less than 10 times the time of final setting for concrete determined under ASTM C403/C403M.

full-depth crack: Crack that runs from one edge of the concrete slab to the opposite or adjacent side of the slab.

opening age: Age when the minimum modulus of rupture specified for opening to traffic and equipment is attained.

time of final setting: Elapsed time required to develop a concrete penetration resistance that is at least 4,000 psi under ASTM C403/C403M.

41-9.01C Submittals

41-9.01C(1) General

At least 15 days before delivery to the job site, submit manufacturer's recommendations, MSDS and instructions for storage and installation of joint filler material.
At least 45 days before starting ISR—RSC work submit a sample of cement from each proposed lot and samples of proposed admixtures in the quantities ordered by the Engineer.
During ISR—RSC placement operations, submit uniformity reports for hydraulic cement at least once every 30 days to the Engineer and METS, attention Cement Laboratory. Uniformity reports must comply with ASTM C917 except testing age and water content may be modified to suit the particular material.
Except for modulus of rupture tests, submit QC test result forms within 48 hours of the paving shift. Submit modulus of rupture results within:

1. 15 minutes of opening age test completion
2. 24 hours of 3-day test completion

41-9.01C(2) Quality Control Plan

If the quantity of ISR—RSC is at least 300 cu yd, submit a QC plan at least 20 days before placing trial slabs. If the quantity of ISR—RSC is less than 300 cu yd, submit proposed forms for RSC inspection, sampling, and testing.

41-9.01C(3) Mix Design

At least 10 days before use in a trial slab, submit a mix design. The maximum ambient temperature range for a mix design is 18 degrees F. Submit more than 1 mix design based on ambient temperature variations anticipated during RSC placement. Each mix design must include:

1. Mix design identification number
2. Aggregate source
3. Opening age
4. Aggregate gradation
5. Types of cement and chemical admixtures
6. Mix proportions
7. Maximum time allowed between batching and placing
8. Range of effective ambient temperatures
9. Time of final setting
10. Modulus of rupture development data from laboratory-prepared samples, including tests at:
    - 10.1. 1 hour before opening age
    - 10.2. Opening age
    - 10.3. 1 hour after opening age
    - 10.4. 1 day
    - 10.5. 3 days
    - 10.6. 7 days
    - 10.7. 28 days

DocuSign Envelope ID: 894511EA-295B-49EB-A393-D26A6837FDD4

11. Shrinkage test data
12. Any special instructions or conditions such as water temperature requirements

41-9.01C(4) Reserved

41-9.01D Quality Control and Assurance

41-9.01D(1) General

Designate a QC manager and assistant QC managers to administer the QC plan. The QC managers must hold current American Concrete Institute (ACI) certification as a Concrete Field Testing Technician-Grade I and a Concrete Laboratory Testing Technician-Grade II, except the assistant QC managers may hold Concrete Laboratory Testing Technician-Grade I instead of Grade II.

The QC manager responsible for the production period involved must review and sign the sampling, inspection, and test reports before submitting them. The QC manager must be present for:

1. Each stage of mix design
2. Trial slab construction
3. Production and construction of RSC
4. Meetings with the Engineer relating to production, placement, or testing

The QC manager must not be a member of this project's production or paving crews, an inspector, or a tester. The QC manager must have no duties during the production and placement of RSC except those specified.

Testing laboratories and equipment must comply with the Department's Independent Assurance Program. At the time of the QC plan submittal, the Department evaluates the quality control samplers and testers.

41-9.01D(2) Just-in-time Training

Reserved

41-9.01D(3) Quality Control Plan

Establish, implement, and maintain a QC plan for pavement The QC plan must describe the organization and procedures used to:

1. Control the production process
2. Determine if a change to the production process is needed
3. Implement a change

The QC plan must include:

1. Names, qualifications, and certifications of QC personnel, including:
   - 1.1. QC manager
   - 1.2. Assistant QC managers
   - 1.3. Samplers and testers
2. Outline of procedure for the production, transportation, placement, and finishing of RSC
3. Outline of procedure and forms for concrete QC, sampling, and testing to be performed during and after RSC construction, including testing frequencies for modulus of rupture
4. Contingency plan for identifying and correcting problems in production, transportation, placement, or finishing RSC including:
   - 4.1. Action limits
   - 4.2. Suspension limits that do not exceed specified material requirements
   - 4.3. Detailed corrective action if limits are exceeded
   - 4.4. Temporary pavement structure provisions, including:
     - 4.4.1. The quantity and location of standby material
     - 4.4.2. Determination of need

DocuSign Envelope ID: 894511EA-295B-49EB-A393-D26A6837FDD4

5. Location of your quality control testing laboratory and testing equipment during and after paving operations
6. List of the testing equipment to be used, including the date of last calibration
7. Production target values for material properties that impact concrete quality or strength including cleanness value and sand equivalent
8. Outline procedure for placing and testing trial slabs, including:
   - 8.1. Locations and times
   - 8.2. Production procedures
   - 8.3. Placing and finishing methods
   - 8.4. Sampling methods, sample curing, and sample transportation
   - 8.5. Testing and test result reporting
9. Name of source plant with approved Material Plant Quality Program (MPQP)
10. Procedures or methods for controlling pavement quality including:
    - 10.1. Materials quality
    - 10.2. Contraction and construction joints
    - 10.3. Protecting pavement before opening to traffic

41-9.01D(4) Prepaving Conference

Schedule a prepaving conference and provide a facility to meet with the Engineer.

Prepaving conference attendees must sign an attendance sheet provided by the Engineer. The prepaving conference must be attended by your:

1. Project superintendent
2. Project manager
3. QC manager
4. Workers and your subcontractor's workers, including:
   - 4.1. Foremen
   - 4.2. Concrete plant manager
   - 4.3. Concrete plant operator
   - 4.4. Concrete plant inspectors
   - 4.5. Personnel performing saw cutting and joint sealing
   - 4.6. Paving machine operators
   - 4.7. Inspectors
   - 4.8. Samplers
   - 4.9. Testers

The purpose of the prepaving conference is to familiarize personnel with the project's specifications. Discuss the QC plan and processes for constructing each item of work, including:

1. Production
2. Transportation
3. Trial slabs
4. Pavement structure removal
5. Placement
6. Contingency plan
7. Sampling
8. Testing
9. Acceptance

Do not start trial slabs or paving activities until the listed personnel have attended the prepaving conference.

41-9.01D(5) Trial Slabs

Before starting individual slab replacement work, complete 1 trial slab for each mix design.

DocuSign Envelope ID: 894511EA-295B-49EB-A393-D26A6837FDD4

Place trial slabs near the job site at a mutually-agreed location that is neither on the roadway nor within the project limits. Trial slabs must be 10 by 20 feet and at least 10 inches thick.
During trial slab construction, sample and split the aggregate for grading, cleanness value, and sand equivalent testing.
Fabricate and test beams under California Test 524 to determine the modulus of rupture values.
Cure beams fabricated for early age testing such that the monitored temperatures in the beams and the slab are always within 5 degrees F of each other.
Monitor and record the internal temperatures of trial slabs and early age beams at intervals of at least 5 minutes. Install thermocouples or thermistors connected to strip-chart recorders or digital data loggers to monitor the temperatures. Temperature recording devices must be accurate to within 2 degrees F. Measure internal temperatures at 1 inch from the top, 1 inch from the bottom, and no closer than 3 inches from any edge until early age testing is completed.
Cure beams fabricated for 3-day testing under California Test 524 except place them into sand at a time that is from 5 to 10 times the time of final setting measured under ASTM C403/403M or 24 hours, whichever is earlier.
Trial slabs must have an opening age modulus of rupture of not less than 400 psi and a 3-day modulus of rupture of not less than 600 psi.
After authorization, remove and dispose of trial slabs and testing materials.

41-9.01D(6) Quality Control Testing

41-9.01D(6)(a) General

Provide continuous process control and quality control sampling and testing throughout RSC production and placement. Notify the Engineer at least 2 business days notice before any sampling and testing. Establish a testing facility at the job site or at an authorized location.
Sample under California Test 125.
During ISR—RSC placement, sample and fabricate beams for modulus of rupture testing within the first 30 cubic yards, at least once every 130 cu yd, and within the final truckload. Submit split samples and fabricate test beams for the Department’s testing unless the Engineer informs you otherwise.
Determine the modulus of rupture at opening age under California Test 524, except beam specimens may be fabricated using an internal vibrator under ASTM C 31. Cure beams under the same conditions as the pavement until 1 hour before testing. Test 3 beam specimens in the presence of the Engineer and average the results. A single test represents no more than that day's production or 130 cu yd, whichever is less.
Determine the modulus of rupture at other ages using beams cured and tested under California Test 524 except place them in sand from 5 to 10 times the time of final setting under ASTM C403/C403M or 24 hours, whichever is earlier.

41-9.01D(6)(b) Rapid Strength Concrete

Your quality control must include testing RSC for the properties at the frequencies shown in the following table:

DocuSign Envelope ID: 894511EA-295B-49EB-A393-D26A6837FDD4

RSC Minimum Quality Control

Property	Test method	Minimum testing frequency[a]
Cleanness value	California Test 227	650 cu yd or 1 per shift
Sand equivalent	California Test 217	650 cu yd or 1 per shift
Aggregate gradation	California Test 202	650 cu yd or 1 per shift
Air content	California Test 504	130 cu yd or 2 per shift
Yield	California Test 518	2 per shift
Slump or penetration	ASTM C143 or California Test 533	1 per 2 hours of paving
Unit weight	California Test 518	650 cubic yards or 2 per shift
Aggregate Moisture Meter Calibration[b]	California Test 223 or California Test 226	1 per shift
Modulus of rupture	California Test 524	Comply with section 41-9.01D(6)(a)

[a]Test at the most frequent interval.
[b]Check calibration of the plant moisture meter by comparing moisture meter readings with California Test 223 or California Test 226 test results

Maintain control charts to identify potential problems and causes. Post a copy of each control chart at a location determined by the Engineer.

Individual measurement control charts must use the target values in the mix proportions as indicators of central tendency.

Develop linear control charts for:

1. Cleanness value
2. Sand equivalent
3. Fine and coarse aggregate gradation
4. Air content
5. Penetration

Control charts must include:

1. Contract number
2. Mix proportions
3. Test number
4. Each test parameter
5. Action and suspension limits
6. Specification limits
7. Quality control test results

For fine and coarse aggregate gradation control charts, record the running average of the previous 4 consecutive gradation tests for each sieve and superimpose the specification limits.

For air content control charts, the action limit is ±1.0 percent and the suspension limit is ±1.5 percent of the specified values. If no value is specified, apply the air content value used in the approved mix design.

As a minimum, a process is out of control if any of the following occurs:

1. For fine and coarse aggregate gradation, 2 consecutive running averages of 4 tests are outside the specification limits
2. For individual penetration or air content measurements:
   - 2.1. One point falls outside the suspension limit line
   - 2.2. Two points in a row fall outside the action limit line

Stop production and take corrective action for out of control processes or the Engineer rejects subsequent RSC.

DocuSign Envelope ID: 894511EA-295B-49EB-A393-D26A6837FDD4

Before each day's concrete pavement placement and at intervals not to exceed 4 hours of production, use a tachometer to test and record vibration frequency for concrete consolidation vibrators.

41-9.01D(6)(c) Reserved

41-9.01D(7) Acceptance Criteria

41-9.01D(7)(a) General

The final texture of ISR—RSC must pass visual inspection and have a coefficient of friction of at least 0.30 determined under California Test 342.

Allow at least 25 days for the Department to schedule testing for coefficient of friction. Notify the Engineer when the pavement is scheduled to be opened to traffic.

41-9.01D(7)(b) Modulus of Rupture

ISR—RSC is accepted based on your testing for modulus of rupture at opening age and the Department's testing for modulus of rupture at 3 days.

ISR—RSC must have a modulus of rupture at opening age that is at least 400 psi and a modulus of rupture at 3 days that is at least 600 psi.

Calculate the test result as the average from testing 3 beams for each sample. The test result represents 1 paving shift or 130 cu yd, whichever is less.

41-9.01D(7)(c) Concrete Pavement Smoothness

The Department tests for concrete pavement smoothness using a 12-foot straightedge. Straightedge smoothness specifications do not apply to the pavement surface placed within 12 inches of existing concrete pavement except parallel to the centerline at the midpoint of a transverse construction joint.

The concrete pavement surface must not vary from the lower edge of a 12-foot straightedge by more than:

1. 0.01 feet when parallel to the centerline
2. 0.02 feet when perpendicular to the centerline extending from edge to edge of a traffic lane

41-9.01D(7)(d) Cracking and Raveling

The Engineer rejects an ISR—RSC slab under section 6-3.06 if within 1 year of contract acceptance there is either:

1. Partial or full-depth cracking
2. Concrete raveling consisting of either:
   - 2.1. Combined raveled areas more than 5 percent of each ISR—RSC slab area
   - 2.2. Any single raveled area of more than 4 sq ft

41-9.01D(8) Reserved

41-9.02 MATERIALS

41-9.02A General

Reserved

41-9.02B Rapid Strength Concrete

RSC for ISR—RSC must comply with section 90-3.

Use either the 1-1/2 inch maximum or the 1-inch maximum combined grading specified in section 90-1.02C(4)(d).

Air content must comply with the minimum requirements in section 40-1.02B(4).

41-9.02C Base Bond Breaker

Use base bond breaker no. 3, 4, or 5 under section 36-2.

DocuSign Envelope ID: 894511EA-295B-49EB-A393-D26A6837FDD4

41-9.02D Reserved

41-9.03 CONSTRUCTION

41-9.03A General

Complete ISR—RSC adjacent to new pavement or existing pavement shown for construction as a 1st order of work. Replace individual slabs damaged during construction before placing final pavement delineation.

41-9.03B Removing Existing Pavement

Remove pavement under section 15-2.02. The Engineer determines the exact ISR—RSC limits after overlying layers are removed.

After removing pavement to the depth shown, grade to a uniform plane. Water as needed and compact the material remaining in place to a firm and stable base. The finished surface of the remaining material must not extend above the grade established by the Engineer.

41-9.03C Drill and Bond Dowel Bars

Drill existing concrete and bond dowel bars under section 41-10 if described. Do not install dowel bars in contraction joints.

41-9.03D Base Bond Breaker

Place base bond breaker before placing ISR—RSC. Comply with section 36-2.

41-9.03E Placing Rapid Strength Concrete

Do not place RSC if the ambient air temperature is forecast by the National Weather Service to be less than 40 degrees F within 72 hours of final finishing.

Before placing RSC against existing concrete, place 1/4-inch thick commercial quality polyethylene flexible foam expansion joint filler across the original transverse and longitudinal joint faces and extend the full depth of pavement to the top of the base layer. Place the top of the joint filler flush with the top of the pavement. Secure joint filler to the joint face of the existing pavement to prevent the joint filler from moving during the placement of RSC.

Use metal or wood side forms. Wood side forms must not be less than 1-1/2 inches thick. Side forms and connections must be of sufficient rigidity that movement will not occur under forces from equipment or RSC. Clean and oil side forms before each use. Side forms must remain in place until the pavement edge no longer requires the protection of forms.

After you place RSC, consolidate it using high-frequency internal vibrators adjacent to forms and across the full paving width. Place RSC as nearly as possible to its final position. Do not use vibrators for extensive shifting of concrete pavement.

Spread and shape RSC with powered finishing machines supplemented by hand finishing. After you mix and place RSC, do not add water to the surface to facilitate finishing. You may request authorization to use surface finishing additives. Submit the manufacturer's instructions with your request.

Place consecutive concrete loads without interruption. Do not allow cold joints where a visible lineation forms after concrete is placed, sets, and hardens before additional concrete placed.

Where the existing transverse joint spacing in an adjacent lane exceeds 15 feet, construct an additional transverse contraction joint midway between the existing joints. Complete sawing of contraction joints within 2 hours of completion of final finishing.

Cut contraction joints a minimum of 1/3 the slab depth.

41-9.03F Final Finishing

After preliminary finishing, round the edges of the initial paving width to a 0.04-foot radius. Round transverse and longitudinal construction joints to a 0.02-foot radius. Mark each ISR—RSC area with a stamp. The stamp mark must show the month, day, and year of placement and contract

DocuSign Envelope ID: 894511EA-295B-49EB-A393-D26A6837FDD4

number. Level the location of the stamp with a steel trowel below the pavement texture. Orient the stamp mark so it can be read from the outside edge of ISR—RSC.

Before curing, texture the pavement. Perform initial texturing with a burlap drag or broom device that produces striations parallel to the centerline. Perform final texturing with a steel-tined device that produces grooves parallel with the centerline.

Tines must be from 3/32 to 1/8 inch wide on 3/4-inch centers and have enough length, thickness, and resilience to form grooves from 1/8 to 3/16 inch deep after the concrete has hardened. Grooves must extend over the entire pavement width except do not construct grooves 3 inches from longitudinal pavement edges or joints.

Final texture must be uniform and smooth. Grooves must be parallel and aligned to the pavement edge across the pavement width. The groove alignment must not vary more than 0.1 foot for every 12 foot length.

Protect RSC under section 90-1.03C.

41-9.03G Temporary Pavement Structure

Temporary pavement structure must be RSC or 3-1/2 inch thick HMA over aggregate base.

41-9.03H Noncompliant Individual Slab Replacement

Replace an ISR—RSC slab with any of the following:

1. One or more full-depth cracks.
2. Concrete raveling.
3. Noncompliant smoothness except you may request authorization for grinding under section 42 and retesting. Grinding that causes a depression will not be considered. Smoothness must be corrected within 48 hours of placing ISR—RSC.
4. Noncompliant modulus of rupture.

If the modulus of rupture at opening age is at least 400 psi and the modulus of rupture at 3 days is at least 500 psi but less than 600 psi, you may request authorization to leave the ISR—RSC in place and accept the specified deduction.

If pavement is noncompliant for coefficient of friction, groove or grind the pavement under section 42. Comply with section 40-1.03Q(4) and groove or grind before the installation of any required joint seal or edge drains adjacent to the areas to the noncompliant area.

If an ISR—RSC slab has partial depth cracking, treat it with high-molecular-weight methacrylate under section 41-3.

41-9.03I Replace Pavement Delineation

Replace traffic stripes, pavement markings, and markers that are removed, obliterated, or damaged by ISR—RSC under sections 84 and 85.

41-9.03J Reserved

41-9.04 PAYMENT

Replace base is not included in the payment for individual slab replacement (RSC).

Drill and bond dowel bars are not included in payment for individual slab replacement (RSC).

For individual slab replacement (RSC) with a modulus of rupture at opening age that is at least 400 psi and a modulus of rupture at 3 days that is greater than or equal to 500 psi but less than 550 psi, the Department deducts 10 percent of the payment for individual slab replacement (RSC).

For individual slab replacement (RSC) with a modulus of rupture at opening age that is at least 400 psi and a modulus of rupture at 3 days that is greater than or equal to 550 psi but less than 600 psi, the Department deducts 5 percent of the payment for individual slab replacement (RSC).

DocuSign Envelope ID: 894511EA-295B-49EB-A393-D26A6837FDD4

41-10 DRILL AND BOND BARS

41-10.01 GENERAL

41-10.01A Summary

Section 41-10 includes specifications for drilling, installing, and bonding tie bars and dowel bars in concrete pavement.

41-10.01B Definitions

Reserved

41-10.01C Submittals

Submit a certificate of compliance for:

1. Tie bars
2. Dowel bars
3. Dowel bar lubricant
4. Chemical adhesive
5. Epoxy powder coating

At least 15 days before delivery to the job site, submit the manufacturer's recommendations and instructions for storage, handling, and use of chemical adhesive.

41-10.01D Quality Control and Assurance

41-10.01D(1) General

Drill and bond bar is accepted based on inspection before concrete placement.

41-10.01D(2) Reserved

41-10.02 MATERIALS

41-10.02A General

Dowel bar lubricant must comply with section 40-1.02D.

Chemical adhesive for drilling and bonding bars must be on the Authorized Material List. The Authorized Material List indicates the appropriate chemical adhesive system for concrete temperature and installation conditions.

Each chemical adhesive system container must clearly and permanently show the following:

1. Manufacturer's name
2. Model number of the system
3. Manufacture date
4. Batch number
5. Expiration date
6. Current International Conference of Building Officials Evaluation Report number
7. Directions for use
8. Storage requirement
9. Warnings or precautions required by state and federal laws and regulations

41-10.02B Reserved

41-10.03 CONSTRUCTION

41-10.03A General

Drill holes for bars. Clean drilled holes in compliance with the chemical adhesive manufacturer’s instructions. Holes must be dry at the time of placing the chemical adhesive and bars. Use a grout retention ring when drilling and bonding dowel bars. Immediately after inserting the bar into the chemical adhesive, support the bar to prevent movement until chemical adhesive has cured the minimum time recommended by the manufacturer.

DocuSign Envelope ID: 894511EA-295B-49EB-A393-D26A6837FDD4

Apply dowel bar lubricant to the entire exposed portion of the dowel bar.
If the Engineer rejects a bar installation: stop paving, drilling, and bonding activities. Adjust your procedures and obtain the Engineer's verbal authorization before resuming paving, drilling, and bonding.
Cut the rejected bar flush with the pavement joint surface and coat the exposed end of the bar with chemical adhesive. Offset the new hole 3 inches horizontally from the rejected hole's center.

41-10.03B Tie Bar Tolerance

Place tie bars within the tolerances shown in the following table:

Tie Bar Tolerances

Dimension	Tolerance
Horizontal skew (vertical skew: bar length)	1:6
Vertical skew (vertical skew: bar length)	1:6
Longitudinal translation (inch)	±1
Horizontal offset (embedment, inch)	±1
Height relative to the adjacent bar	±1
Vertical Depth (clearance from the pavement surface or bottom, inches, min)	3

41-10.03C Dowel Bar Tolerance

Place dowel bars within the tolerances specified in section 40-1.01D(7)(b)(v).

41-10.03D Reserved

41-10.04 PAYMENT

Not Used

41-11–41-15 RESERVED

^^

42 GROOVE AND GRIND CONCRETE

07-19-13

Replace the paragraph of section 42-1.01A with:

07-19-13

Section 42-1 includes general specifications for grooving and grinding concrete.

Replace the headings and paragraphs in section 42-3 with:

07-19-13

42-3.01 GENERAL

42-3.01A Summary

Section 42-3 includes specifications for grinding the surfaces of pavement, bridge decks, and approach slabs.

42-3.01B Definitions

Reserved

42-3.01C Submittals

Reserved

42-3.01D Quality Control and Assurance

Reserved

42-3.02 MATERIALS

Not Used

DocuSign Envelope ID: 894511EA-295B-49EB-A393-D26A6837FDD4

42-3.03 CONSTRUCTION

42-3.03A General

Grind surfaces in the longitudinal direction of the traveled way and grind the full lane width. Begin and end grinding at lines perpendicular to the roadway centerline.

Grinding must result in a parallel corduroy texture with grooves from 0.08 to 0.12 inch wide and from 55 to 60 grooves per foot of width. Grooves must be from 0.06 to 0.08 inch from the top of the ridge to the bottom of the groove.

Grind with abrasive grinding equipment using diamond cutting blades mounted on a self-propelled machine designed for grinding and texturing concrete pavements.

42-3.03B Pavement

Grind existing concrete pavement that is adjacent to an individual slab replacement. Grind the replaced individual slab and all the existing slabs immediately surrounding it. Grind after the individual slab is replaced.

Grind existing concrete pavement that is adjacent to new lanes of concrete pavement. Grind before paving.

After grinding, the existing pavement must comply with requirements for smoothness and coefficient of friction in section 40 except:

1. At the midpoint of a joint or crack, test smoothness with a straightedge. Both sides must have uniform texture.
2. Straightedge and inertial profiler requirements do not apply to areas abnormally depressed from subsidence or other localized causes. End smoothness testing 15 feet before and resume 15 feet after these areas.
3. Cross-slope must be uniform and have positive drainage across the traveled way and shoulder.

As an alternative to grinding existing concrete pavement, you may replace the existing pavement. The new concrete pavement must be the same thickness as the removed pavement. Replace existing pavement between longitudinal joints or pavement edges and transverse joints. Do not remove portions of slabs.

Replacement of existing concrete pavement must comply with requirements for individual slab replacement in section 41-9.

42-3.03C Bridge Decks, Approach Slabs, and Approach Pavement

Grind bridge decks, approach slabs, and approach pavement only if described.

The following ground areas must comply with the specifications for smoothness and concrete cover over reinforcing steel in section 51-1.01D(4):

1. Bridge decks
2. Approach slabs
3. Adjacent 50 feet of approach pavement

After grinding, the coefficient of friction must comply with section 51-1.01D(4).

42-3.04 PAYMENT

Grinding existing approach slabs and adjacent 50 feet of approach pavement is paid for as grind existing bridge deck.

The Department does not pay for grinding replacement concrete pavement or for additional grinding to comply with smoothness requirements.

DocuSign Envelope ID: 894511EA-295B-49EB-A393-D26A6837FDD4

Add to section 42:

07-19-13

42-4–42-9 RESERVED

^^^

DocuSign Envelope ID: 894511EA-295B-49EB-A393-D26A6837FDD4

Add to section 46-1.02:

07-19-13

46-1.02C Grout

Grout must consist of cement and water and may contain an admixture if authorized. Cement must comply with section 90-1.02B(2). Water must comply with section 90-1.02D. Admixtures must comply with section 90, except they must not contain chloride ions in excess of 0.25 percent by weight. Do not exceed 5 gallons of water per 94 lb of cement.

Mix the grout as follows:

1. Add water to the mixer followed by cement and any admixtures or fine aggregate.
2. Mix the grout with mechanical mixing equipment that produces a uniform and thoroughly mixed grout.
3. Agitate the grout continuously until the grout is pumped.
4. Do not add water after the initial mixing.

Add to section 46-1.03B:

04-20-12

Dispose of drill cuttings under section 19-2.03B.

Add to the end of section 46-1.03C:

07-19-13

Grouting equipment must be:

1. Capable of grouting at a pressure of at least 100 psi
2. Equipped with a pressure gage having a full-scale reading of not more than 300 psi

07-19-13

Delete the 3rd paragraph of section 46-2.01A.

Add to the beginning of section 46-2.01C:

07-19-13

Submittals for strand tendons, bar tendons, bar couplers, and anchorage assemblies must comply with section 50-1.01C.

Add to section 46-2.01D:

07-19-13

46-2.01D(3) Steel

Strand tendons, bar tendons, bar couplers, and anchorage assemblies must comply with section 50-1.01D.

46-2.01D(4) Grout

The Department tests the efflux time of the grout under California Test 541.

Add to the beginning of section 46-2.02B:

07-19-13

Strand tendons, bar tendons, and bar couplers must comply with section 50-1.02B.

DocuSign Envelope ID: 894511EA-295B-49EB-A393-D26A6837FDD4

Replace the 1st paragraph of section 46-2.02E with:

07-19-13

The efflux time of the grout immediately after mixing must be at least 11 seconds.

Add between the 13th and 14th paragraphs of section 46-2.03A:

07-19-13

If hot weather conditions will contribute to quick stiffening of the grout, cool the grout by authorized methods as necessary to prevent blockages during pumping activities.

Add between the 1st and 2nd paragraphs of section 46-2.03D:

07-19-13

Secure the ends of strand tendons with a permanent type anchorage system that:

1. Holds the prestressing steel at a force producing a stress of at least 95 percent of the specified ultimate tensile strength of the steel
2. Permanently secures the ends of the prestressing steel

Replace the 2nd sentence of the 1st paragraph of section 46-3.02A with:

07-19-13

The epoxy-coated prefabricated reinforcing bar must comply with section 52-2.03, except the epoxy thickness must be from 10 to 12 mils.

Replace the 2nd paragraph of section 46-3.02B with:

07-19-13

Concrete anchors on bearing plates must comply with the specifications for studs in clause 7 of AWS D1.1.

07-19-13

Delete the 1st paragraph of section 46-3.02E.

^^

47 EARTH RETAINING SYSTEMS

07-18-14

Replace the 2nd paragraph of section 47-2.01D with:

02-17-12

Coupler test samples must comply with minimum tensile specifications for steel wire in ASTM A 82/A 82M. Total wire slip must be at most 3/16 inch when tested under the specifications for tension testing of round wire test samples in ASTM A 370.

Replace "78-80" in the 1st table in the 2nd paragraph of section 47-2.02C with:

10-19-12

78-100

Replace the value for the sand equivalent requirement in the 2nd table in the 3rd paragraph of section 47-2.02C with:

01-20-12

12 minimum

DocuSign Envelope ID: 894511EA-295B-49EB-A393-D26A6837FDD4

Replace the 1st paragraph of section 47-2.02E with:

07-18-14

Steel wire must comply with the specifications for plain wire reinforcement in ASTM A1064/A1064M. Welded wire reinforcement must comply with the specifications for plain wire welded wire reinforcement in ASTM A1064/A1064M.
Hooks and bends must comply with the *Building Code Requirements for Structural Concrete* published by ACI.

Replace section 47-3 with:

07-19-13

47-3 REINFORCED CONCRETE CRIB WALLS

47-3.01 General

Section 47-3 includes specifications for constructing reinforced concrete crib walls.
Reinforced concrete crib walls must comply with section 51.
Reinforcement must comply with section 52.
Concrete crib walls consist of a series of rectangular cells composed of interlocking, precast, reinforced concrete headers, stretchers, and blocks.

47-3.02 Materials

47-3.02A General

Pads shown to be placed between bearing surfaces must either be (1) neoprene complying with the specifications for strip waterstops in section 51-2.05 or (2) commercial quality no. 30 asphalt felt. The protective board is not required for neoprene pads.

47-3.02B Crib Members

47-3.02B(1) General

All members may be manufactured to dimensions 1/8 inch greater in thickness than shown. The thickness of the lowest step must not be less than the dimension shown.
Stretchers may be manufactured 1/2 inch less in length than shown.
When an opening is shown in the face of the wall, special length stretchers and additional headers may be necessary.
For non-tangent wall alignments, special length stretchers may be required.
For non-tangent wall alignments and at locations where filler blocks are required, special length front face closure members may be required.

47-3.02B(2) Reinforcement

Reinforcing wire must comply with ASTM A 496/A 496M.
For hoops or stirrups use either (1) reinforcing wire or (2) deformed steel welded wire reinforcement. The size must be equivalent to the reinforcing steel shown. Deformed steel welded wire reinforcement must comply with ASTM A 497/A 497M.

47-3.02B(3) Concrete

Concrete test cylinders must comply with section 90-1.01D(5), except when the penetration of fresh concrete is less than 1 inch, the concrete in the test mold must be consolidated by vibrating the mold equivalent to the consolidating effort being used to consolidate the concrete in the members.
Cure crib members under section 51-4.02C.
When removed from forms, the members must present a true surface of even texture, free from honeycombs and voids larger than 1 inch in diameter and 5/16 inch in depth. Clean and fill other pockets with mortar under sections 51-1.02F and 51-1.03E(2).

DocuSign Envelope ID: 894511EA-295B-49EB-A393-D26A6837FDD4

External vibration resulting in adequate consolidation may be used.
If the Engineer determines that rock pockets are of the extent or character as to affect the strength of the member or to endanger the life of the steel reinforcement, replace the member.
Finish concrete-to-concrete bearing surfaces to a smooth plane. Section 51-1.03F does not apply to concrete crib members.

47-3.03 Construction

Place reinforced concrete crib walls to the lines and grades established by the Engineer. The foundation must be accepted by the Engineer before any crib members are placed.
The gap between bearing surfaces must not exceed 1/8 inch.
Where a gap of 1/16 inch to 1/8 inch exists or where shown, place a 1/16-inch pad of asphalt felt or sheet neoprene between the bearing surfaces.

47-3.04 Payment

The area of reinforced concrete crib wall is measured on the batter at the outer face for the height from the bottom of the bottom stretcher to the top of the top stretcher and for a length measured from end to end of each section of wall.

Add between the 3rd and 4th paragraphs of section 47-5.01:

10-19-12

Reinforcement must comply with section 52.

Add to section 47-6.01A:

10-19-12

The alternative earth retaining system must comply with the specifications for the type of wall being constructed.

Replace "sets" at each occurrence in the 1st paragraph of section 47-6.01C with:

04-19-13

copies

^^

48 TEMPORARY STRUCTURES

07-19-13

Replace "previously welded splice" and its definition in section 48-2.01B with:

04-19-13

previously welded splice: Splice made in a falsework member in compliance with AWS D1.1 or other recognized welding standard before contract award.

Add to section 48-2.01B:

07-19-13

independent support system: Support system that is in addition to the falsework removal system employing methods of holding falsework from above by winches, hydraulic jacks with prestressing steel, HS rods, or cranes.

DocuSign Envelope ID: 894511EA-295B-49EB-A393-D26A6837FDD4

04-19-13

Delete "field" in the 1st sentence of the 5th paragraph of section 48-2.01C(1).

Replace item 1 in the list in the 6th paragraph of section 48-2.01C(1) with:

04-19-13

1. Itemize the testing, inspection methods, and acceptance criteria used

Replace "sets" at each occurrence in the 4th paragraph of section 48-2.01C(2) with:

07-19-13

copies

Replace the 7th paragraph of section 48-2.01C(2) with:

09-16-11

If you submit multiple submittals at the same time or additional submittals before review of a previous submittal is complete:

1. You must designate a review sequence for submittals
2. Review time for any submittal is the review time specified plus 15 days for each submittal of higher priority still under review

Add to section 48-2.01C(2):

07-19-13

Shop drawings and calculations for falsework removal systems employing methods of holding falsework from above by winches, hydraulic jacks with prestressing steel, HS rods, or cranes must include:

1. Design code used for the analysis of the structural members of the independent support system
2. Provisions for complying with current Cal/OSHA requirements
3. Load tests and ratings within 1 year of intended use of hydraulic jacks and winches
4. Location of the winches, hydraulic jacks with prestressing steel, HS rods, or cranes
5. Analysis showing that the bridge deck and overhang are capable of supporting all loads at all time
6. Analysis showing that winches will not overturn or slide during all stages of loading
7. Location of deck and soffit openings if needed
8. Details of repair for the deck and soffit openings after falsework removal

Replace the 1st paragraph of section 48-2.01D(2) with:

04-19-13

Welding must comply with AWS D1.1 or other recognized welding standard, except for fillet welds where the load demands are 1,000 lb or less per inch for each 1/8 inch of fillet weld.

Replace the 1st through 3rd sentences in the 2nd paragraph of section 48-2.01D(2) with:

04-19-13

Perform NDT on welded splices using UT or RT. Each weld and any repair made to a previously welded splice must be tested.

DocuSign Envelope ID: 894511EA-295B-49EB-A393-D26A6837FDD4

Replace the 3rd paragraph of section 48-2.01D(2) with:

04-19-13

For previously welded splices, perform and document all necessary testing and inspection required to certify the ability of the falsework members to sustain the design stresses.

Add to section 48-2.01D(3)(a):

07-19-13

Falsework removal system employing methods of holding falsework from above and members of the independent support system must support the sum of the actual vertical and horizontal loads due to falsework materials, equipment, construction sequence or other causes, and wind loading. Identifiable mechanical devices used in the falsework removal plan must meet applicable industry standards and manufacturer instructions for safe load carrying capacity. Unidentifiable winches must be capable of carrying twice the design load.

The load used for the analysis of overturning moment and sliding of the winch system must be 150 percent of the design load.

Add to section 48-2.03D:

07-19-13

Falsework removal employing methods of holding falsework by winches, hydraulic jacks with prestressing steel, HS rods, or cranes must also be supported by an independent support system when the system is not actively lowering the falsework at vehicular, pedestrian, or railroad traffic openings.

Bridge deck openings used to facilitate falsework removal activities must be formed and located away from the wheel path. The formed openings must be wedge shaped with a 5-inch maximum diameter at the top and a 3-inch maximum diameter at the bottom.

Anchor 10-inch-square aluminum or galvanized steel wire, 1/4-inch-mesh hardware cloth with a 0.025- inch minimum wire diameter firmly to the inside of the soffit openings. Construct a 1/2-inch drip groove to the outside of soffit openings.

Clean and roughen openings made in the bridge deck. Fill the deck openings with rapid setting concrete complying with section 15-5.02.

^^

49 PILING

07-18-14

Replace "sets" in the 1st paragraph of section 49-1.01C(2) with:

04-19-13

copies

Replace "set" in the 2nd paragraph of section 49-1.01C(2) with:

04-19-13

copy

Replace "Load Applied to Pile by Hydraulic Jack(s) Acting at One End of Test Beam(s) Anchored to the Pile" in the 5th paragraph of section 49-1.01D(2) with:

07-20-12

"Tensile Load Applied by Hydraulic Jack(s) Acting Upward at One End of Test Beam(s)"

DocuSign Envelope ID: 894511EA-295B-49EB-A393-D26A6837FDD4

Add to section 49-1.03:

04-20-12

Dispose of drill cuttings under section 19-2.03B.

Replace the paragraph of section 49-2.01A(1) with:

07-19-13

Section 49-2.01 includes general specifications for fabricating and installing driven piles.
Epoxy-coated bar reinforcing steel used for pile anchors must comply with section 52-2.02.

Replace the 2nd paragraph of section 49-2.01D with:

01-20-12

Furnish piling is measured along the longest side of the pile from the specified tip elevation shown to the plane of pile cutoff.

Replace the paragraph of section 49-2.02A(1) with:

07-19-13

Section 49-2.02 includes specifications for fabricating and installing steel pipe piles.

Replace the definitions in section 49-2.02A(2) with:

07-19-13

shop welding: Welding performed at a plant on the Department's Authorized Facility Audit List.

field welding: Welding not performed at a plant on the Department's Authorized Facility Audit List.

Replace item 2 in the list in the paragraph of section 49-2.02A(3)(b) with:

07-19-13

2. Certified mill test reports for each heat number of steel used in pipe piles being furnished.

Replace the paragraph of section 49-2.02A(4)(a) with:

07-19-13

Section 11-3.02 does not apply to shop welds in steel pipe piles fabricated at a facility on the Department's Authorized Facility Audit List.
For groove welds using submerged arc welding from both sides without backgouging, qualify the WPS under Table 4.5 of AWS D1.1.

Replace "0.45" in the 2nd paragraph of section 49-2.02B(1)(a) with:

07-19-13

0.47

Replace the 1st paragraph of section 49-2.02B(1)(b) with:

07-19-13

Welds must comply with AWS D1.1. Circumferential welds must be CJP welds.

07-19-13

Delete the 5th paragraph of section 49-2.02B(1)(b).

DocuSign Envelope ID: 894511EA-295B-49EB-A393-D26A6837FDD4

Add to section 49-2.02B(1):

07-19-13

49-2.02B(1)(d) Reserved

Replace "4.8.4" in item 2.3 in the list in the 2nd paragraph of section 49-2.02B(2) with:

07-19-13

4.9.4

07-19-13

Delete the 3rd paragraph of section 49-2.02C(2).

Replace the paragraph of section 49-2.03A(1) with:

07-19-13

Section 49-2.03 includes specifications for fabricating and installing structural shape steel piles.

Replace the paragraph of section 49-2.03A(3) with:

07-19-13

Submit a certified material test report and a certificate of compliance that includes a statement that all materials and workmanship incorporated in the work and all required tests and inspections of this work have been performed as described.

Replace the 1st paragraph of section 49-2.03B with:

07-19-13

Structural shape steel piles must comply with ASTM A 36/A 36M, ASTM A 572/A 572M, ASTM A 709/A 709M, or ASTM A 992/A 992M.

Replace "sets" in the 1st paragraph of section 49-2.04A(3) with:

04-19-13

copies

07-19-13

Delete the 1st paragraph of section 49-2.04A(4).

Replace the 3rd and 4th paragraphs of section 49-2.04B(2) with:

10-19-12

Piles in a corrosive environment must be steam or water cured under section 90-4.03.
If piles in a corrosive environment are steam cured, either:

1. Keep the piles continuously wet for at least 3 days. The 3 days includes the holding and steam curing periods.
2. Apply curing compound under section 90-1.03B(3) after steam curing.

Replace the 1st paragraph of section 49-3.01A with:

07-19-13

Section 49-3.01 includes general specifications for constructing CIP concrete piles.

Add to section 49-3.01A:

01-20-12

Concrete must comply with section 51.

DocuSign Envelope ID: 894511EA-295B-49EB-A393-D26A6837FDD4

Replace the 1st paragraph of section 49-3.01C with:

01-20-12

Except for CIDH concrete piles constructed under slurry, construct CIP concrete piles such that the excavation methods and the concrete placement procedures provide for placing the concrete against undisturbed material in a dry or dewatered hole.

Replace "Reserved" in section 49-3.02A(2) with:

01-20-12

dry hole:

1. Except for CIDH concrete piles specified as end bearing, a drilled hole that:
   1.1. Accumulates no more than 12 inches of water in the bottom of the drilled hole during a period of 1 hour without any pumping from the hole during the hour.
   1.2. Has no more than 3 inches of water in the bottom of the drilled hole immediately before placing concrete.
2. For CIDH concrete piles specified as end bearing, a drilled hole free of water without the use of pumps.

Replace "Reserved" in section 49-3.02A(3)(a) with:

01-20-12

If plastic spacers are proposed for use, submit the manufacturer's data and a sample of the plastic spacer. Allow 10 days for review.

Replace item 5 in the list in the 1st paragraph of section 49-3.02A(3)(b) with:

10-19-12

5. Methods and equipment for determining:
   5.1. Depth of concrete
   5.2. Theoretical volume of concrete to be placed, including the effects on volume if casings are withdrawn
   5.3. Actual volume of concrete placed

Add to the list in the 1st paragraph of section 49-3.02A(3)(b):

01-18-13

8. Drilling sequence and concrete placement plan.

Replace item 2 in the list in the 1st paragraph of section 49-3.02A(3)(g) with:

01-20-12

2. Be sealed and signed by an engineer who is registered as a civil engineer in the State. This requirement is waived for either of the following conditions:
   2.1. The proposed mitigation will be performed under the current Department-published version of *ADSC Standard Mitigation Plan 'A' - Basic Repair* without exception or modification.
   2.2. The Engineer determines that the rejected pile does not require mitigation due to structural, geotechnical, or corrosion concerns, and you elect to repair the pile using the

DocuSign Envelope ID: 894511EA-295B-49EB-A393-D26A6837FDD4

current Department-published version of *ADSC Standard Mitigation Plan 'B' - Grouting Repair* without exception or modification.

Replace "49-2.03A(4)(d)" in the 1st paragraph of section 49-3.02A(4)(d)(i) with:

07-19-13

49-3.02A(4)(d)

Add to the beginning of section 49-3.02A(4)(d)(ii):

07-19-13

If the drilled hole is dry or dewatered without the use of temporary casing to control ground water, installation of inspection pipes is not required.

Replace item 1 in the list in the 1st paragraph of section 49-3.02A(4)(d)(ii) with:

01-20-12

1. Inspection pipes must be schedule 40 PVC pipe complying with ASTM D 1785 with a nominal pipe size of 2 inches. Watertight PVC couplers complying with ASTM D 2466 are allowed to facilitate pipe lengths in excess of those commercially available. Log the location of the inspection pipe couplers with respect to the plane of pile cutoff.

Add to section 49-3.02A(4)(d)(iv):

01-20-12

If the Engineer determines it is not feasible to use one of ADSC's standard mitigation plans to mitigate the pile, schedule a meeting and meet with the Engineer before submitting a nonstandard mitigation plan.

The meeting attendees must include your representatives and the Engineer's representatives involved in the pile mitigation. The purpose of the meeting is to discuss the type of pile mitigation acceptable to the Department.

Provide the meeting facility. The Engineer conducts the meeting.

Replace the 1st paragraph of section 49-3.02B(5) with:

07-19-13

Grout must consist of cementitious material and water, and may contain an admixture if authorized. Do not exceed 5 gallons of water per 94 lb of cement.

Cementitious material must comply with section 90-1.02B, except SCMs are not required.

Water must comply with section 90-1.02D. If municipally supplied potable water is used, the testing specified in section 90-1.02D is waived.

Admixtures must comply with section 90, except admixtures must not contain chloride ions in excess of 0.25 percent by weight.

Use aggregate to extend the grout as follows:

1. Aggregate must consist of at least 70 percent fine aggregate and approximately 30 percent pea gravel, by weight.
2. Fine aggregate must comply with section 90-1.02C(3).
3. Size of pea gravel must be such that 100 percent passes the 1/2-inch sieve, at least 85 percent passes the 3/8-inch sieve, and not more than 5 percent passes the no. 8 sieve.
4. Minimum cementitious material content of the grout must not be less than 845 lb/cu yd of grout.

DocuSign Envelope ID: 894511EA-295B-49EB-A393-D26A6837FDD4

Mix the grout as follows:
1. Add water to the mixer followed by cementitious material, aggregates, and any admixtures.
2. Mix the grout with mechanical mixing equipment that produces a uniform and thoroughly mixed grout.
3. Agitate the grout continuously until the grout is pumped.
4. Do not add water after initial mixing.

Replace section 49-3.02B(8) with:

01-20-12

49-3.02B(8) Spacers

Spacers must comply with section 52-1.03D, except you may use plastic spacers.
Plastic spacers must:
1. Comply with sections 3.4 and 3.5 of the Concrete Reinforcing Steel Institute's *Manual of Standard Practice*
2. Have at least 25 percent of their gross plane area perforated to compensate for the difference in the coefficient of thermal expansion between the plastic and concrete
3. Be of commercial quality

Add between the 1st and 2nd paragraphs of section 49-3.02C(2):

07-19-13

For CIDH concrete piles with a pile cap, the horizontal tolerance at the center of each pile at pile cut-off is the larger of 1/24 of the pile diameter or 3 inches. The horizontal tolerance for the center-to-center spacing of 2 adjacent piles is the larger of 1/24 of the pile diameter or 3 inches.

Add between the 3rd and 4th paragraphs of section 49-3.02C(2):

07-18-14

If drilling slurry is used during excavation, maintain the slurry level at least 10 feet above the piezometric head.

Add to section 49-3.02C(4):

01-20-12

Unless otherwise shown, the bar reinforcing steel cage must have at least 3 inches of clear cover measured from the outside of the cage to the sides of the hole or casing.
Place spacers at least 5 inches clear from any inspection tubes.
Place plastic spacers around the circumference of the cage and at intervals along the length of the cage, as recommended by the manufacturer.

07-19-13

For a single CIDH concrete pile supporting a column:
1. If the pile and the column share the same reinforcing cage diameter, this cage must be accurately placed as shown
2. If the pile reinforcing cage is larger than the column cage and the concrete is placed under dry conditions, maintain a clear horizontal distance of at least 3.5 inches between the two cages
3. If the pile reinforcing cage is larger than the column cage and the concrete is placed under slurry, maintain a clear horizontal distance of at least 5 inches between the two cages

DocuSign Envelope ID: 894511EA-295B-49EB-A393-D26A6837FDD4

Replace section 49-3.02C(6) with:

07-19-13

49-3.02C(6) Construction Joint

Section 49-3.02C(6) applies to CIDH concrete piles where a construction joint is shown.
If a permanent steel casing is not shown, you must furnish and install a permanent casing. The permanent casing must:

1. Be watertight and of sufficient strength to prevent damage and to withstand the loads from installation procedures, drilling and tooling equipment, lateral concrete pressures, and earth pressures.
2. Extend at least 5 feet below the construction joint. If placing casing into rock, the casing must extend at least 2 feet below the construction joint.
3. Not extend above the top of the drilled hole or final grade whichever is lower.
4. Not increase the diameter of the CIDH concrete pile more than 2 feet.
5. Be installed by impact or vibratory hammers, oscillators, rotators, or by placing in a drilled hole. Casings placed in a drilled hole must comply with section 49-3.02C(5).

Section 49-2.01A(4)(b) does not apply to permanent casings specified in this section.

Replace item 3 in the list in the 11th paragraph of section 49-3.02C(8) with:

07-18-14

3. Maintain the slurry level at least10 feet above the piezometric head

Add to section 49-4.01:

07-19-13

Steel soldier piles must comply with section 49-2.03.

Replace the headings and paragraphs in section 49-4.02 with:

07-19-13

Concrete anchors must comply with the specifications for studs in clause 7 of AWS D1.1.

^^

50 PRESTRESSING CONCRETE

07-19-13

Replace "sets" at each occurrence in the 2nd and 3rd paragraphs of section 50-1.01C(3) with:

04-19-13

copies

Add to section 50-1.01C(3):

07-19-13

Include a grouting plan with your shop drawing submittal. The grouting plan must include:

1. Detailed grouting procedures
2. Type, quantity, and brand of materials to be used
3. Type of equipment to be used including provisions for backup equipment

DocuSign Envelope ID: 894511EA-295B-49EB-A393-D26A6837FDD4

4. Types and locations of grout inlets, outlets, and vents
5. Methods to clean ducts before grouting
6. Methods to control the rate of flow within ducts
7. Theoretical grout volume calculations for each duct
8. Duct repair procedures due to an air pressure test failure
9. Mixing and pumping procedures
10. Direction of grouting
11. Sequence of use of inlets and outlets
12. Procedure for handling blockages
13. Proposed forms for recording grouting information
14. Procedure for secondary grouting
15. Names of people who will perform grouting activities including their relevant experience and certifications

Add to section 50-1.01C:

07-19-13

50-1.01C(5) Grout

Submit a daily grouting report for each day grouting is performed. Submit the report within 3 days after grouting. The report must be signed by the technician supervising the grouting activity. The report must include:

1. Identification of each tendon
2. Date grouting occurred
3. Time the grouting started and ended
4. Date of placing the prestressing steel in the ducts
5. Date of stressing
6. Type of grout used
7. Injection end and applied grouting pressure
8. Actual and theoretical quantity of grout used to fill duct
9. Ratio of actual to theoretical grout quantity
10. Records of air, grout, and structure surface temperatures during grouting.
11. Summary of tests performed and results, except submit compressive strength and chloride ion test results within 48 hours of test completion
12. Names of personnel performing the grouting activity
13. Summary of problems encountered and corrective actions taken
14. Summary of void investigations and repairs made

Replace the introductory clause in the 1st paragraph of section 50-1.01C(4) with:

07-19-13

Submit test samples for the materials shown in the following table to be used in the work:

Add between "the" and "test samples" in the 1st paragraph of section 50-1.01D(2):

07-19-13

prestressing steel

DocuSign Envelope ID: 894511EA-295B-49EB-A393-D26A6837FDD4

Replace the 3rd paragraph of section 50-1.01D(2) with:

10-19-12

The Department may verify the prestressing force using the Department's load cells.

Replace the 3rd paragraph in section 50-1.01D(3) with:

07-19-13

Each pressure gage must be fully functional and have an accurately reading, clearly visible dial or display. The dial must be at least 6 inches in diameter and graduated in 100 psi increments or less.

Add between the 5th and 6th paragraphs of section 50-1.01D(3):

07-19-13

Each jack and its gages must be calibrated as a unit.

Replace the 6th paragraph in section 50-1.01D(3) with:

07-19-13

Each jack used to tension prestressing steel permanently anchored at 25 percent or more of its specified minimum ultimate tensile strength must be calibrated by METS within 1 year of use and after each repair. You must:

1. Schedule the calibration of the jacking equipment with METS
2. Mechanically calibrate the gages with a dead weight tester or other authorized means before calibration of the jacking equipment by METS
3. Verify that the jack and supporting systems are complete, with proper components, and are in good operating condition
4. Provide labor, equipment, and material to (1) install and support the jacking and calibration equipment and (2) remove the equipment after the calibration is complete
5. Plot the calibration results

Each jack used to tension prestressing steel permanently anchored at less than 25 percent of its specified minimum ultimate tensile strength must be calibrated by an authorized laboratory within 6 months of use and after each repair.

Add to section 50-1.01D:

07-19-13

50-1.01D(4) Pressure Testing Ducts

For post-tensioned concrete bridges, pressure test each duct with compressed air after stressing. To pressure test the ducts:

1. Seal all inlets, outlets, and grout caps.
2. Open all inlets and outlets on adjacent ducts.
3. Attach an air compressor to an inlet at 1 end of the duct. The attachment must include a valve that separates the duct from the air source.
4. Attach a pressure gage to the inlet at the end of the duct.
5. Pressurize the duct to 50 psi.
6. Lock-off the air source.
7. Record the pressure loss after 1 minute.
8. If there is a pressure loss exceeding 25 psi, repair the leaks with authorized methods and retest.

Compressed air used to clear and test the ducts must be clean, dry, and free of oil or contaminants.

DocuSign Envelope ID: 894511EA-295B-49EB-A393-D26A6837FDD4

50-1.01D(5) Duct Demonstration of Post-Tensioned Members

Before placing forms for deck slabs of box girder bridges, demonstrate that any prestressing steel placed in the ducts is free and unbonded. If no prestressing steel is in the ducts, demonstrate that the ducts are unobstructed.

If prestressing steel is installed after the concrete is placed, demonstrate that the ducts are free of water and debris immediately before installing the steel.

Before post-tensioning any member, demonstrate that the prestressing steel is free and unbonded in the duct.

The Engineer must witness all demonstrations.

50-1.01D(6) Void Investigation

In the presence of the Engineer, investigate the ducts for voids between 24 hours and 72 hours after grouting completion. As a minimum, inspect the inlet and outlet ports at the anchorages and at high points in the tendons for voids after removal. Completely fill any voids found with secondary grout.

50-1.01D(7) Personnel Qualifications

Perform post-tensioning field activities, including grouting, under the direct supervision of a technician certified as a level 2 Bonded PT Field Specialist through the Post-Tensioning Institute. Grouting activities may be performed under the direct supervision of a technician certified as a Grouting Technician through the American Segmental Bridge Institute.

Replace the 6th paragraph of section 50-1.02B with:

07-19-13

Package the prestressing steel in containers or shipping forms that protect the steel against physical damage and corrosion during shipping and storage.

Replace the 13th paragraph of section 50-1.02B with:

07-19-13

Prestressing steel is rejected if surface rust either:

1. Cannot be removed by hand-cleaning with a fine steel wool pad
2. Leaves pits visible to the unaided eye after cleaning

Replace the 4th paragraph of section 50-1.02C with:

07-19-13

Admixtures must comply with section 90, except admixtures must not contain chloride ions in excess of 0.25 percent by weight.

07-19-13

Delete the 5th paragraphs of section 50-1.02C.

Add to section 50-1.02C:

07-19-13

Secondary grout must:

1. Comply with ASTM C 1107
2. Not have a deleterious effect on the steel, concrete, or bond strength of the steel to concrete

DocuSign Envelope ID: 894511EA-295B-49EB-A393-D26A6837FDD4

Replace item 9 including items 9.1 and 9.2 in the list in the 1st paragraph of section 50-1.02D with:

07-19-13

9. Have an inside cross-sectional area of at least 2.5 times the net area of the prestressing steel for multistrand tendons

Replace "3/8" in item 10 in the list in the 1st paragraph of section 50-1.02D with:

07-19-13

1/2

07-19-13

Delete the 2nd sentences in the 1st paragraph of section 50-1.02E.

Replace section 50-1.02F with:

07-19-13

50-1.02F Permanent Grout Caps

Permanent grout caps for anchorage systems of post-tensioned tendons must:

1. Be glass-fiber-reinforced plastic with antioxidant additives. The environmental stress-cracking failure time must be at least 192 hours under ASTM D 1693, Condition C.
2. Completely cover and seal the wedge plate or anchorage head and all exposed metal parts of the anchorage against the bearing plate using neoprene O-ring seals.
3. Have a grout vent at the top of the cap.
4. Be bolted to the anchorage with stainless steel complying with ASTM F 593, alloy 316. All fasteners, including nuts and washers, must be alloy 316.
5. Be pressure rated at or above 150 psi.

Add to section 50-1.02:

09-16-11

50-1.02G Sheathing

Sheathing for debonding prestressing strand must:

1. Be split or un-split flexible polymer plastic tubing
2. Have a minimum wall thickness of 0.025 inch
3. Have an inside diameter exceeding the maximum outside diameter of the strand by 0.025 to 0.14 inch

Split sheathing must overlap at least 3/8 inch.
Waterproofing tape used to seal the ends of the sheathing must be flexible adhesive tape.
The sheathing and waterproof tape must not react with the concrete, coating, or steel.

Replace the 2nd paragraph of section 50-1.03A(3) with:

07-19-13

After installation, cover the duct ends and vents to prevent water or debris from entering.

Add to section 50-1.03A(3):

07-19-13

Support ducts vertically and horizontally during concrete placement at a spacing of at most 4 feet.

DocuSign Envelope ID: 894511EA-295B-49EB-A393-D26A6837FDD4

07-19-13

Delete "at least" in the 1st paragraph of section 50-1.03B(1).

Add to section 50-1.03B(1):

01-20-12

After seating, the maximum tensile stress in the prestressing steel must not exceed 75 percent of the minimum ultimate tensile strength shown.

07-19-13

Delete the 1st through 4th paragraphs of section 50-1.03B(2)(a).

Replace "temporary tensile strength" in the 7th paragraph of section 50-1.03B(2)(a) with:

07-19-13

temporary tensile stress

Add to section 50-1.03B(2)(a):

07-19-13

If prestressing strand is installed using the push-through method, use guide caps at the front end of each strand to protect the duct from damage.

Add to the list in the 2nd paragraph of section 50-1.03B(2)(c):

07-19-13

3. Be equipped with permanent grout caps

Replace section 50-1.03B(2)(d) with:

07-19-13

50-1.03B(2)(d) Bonding and Grouting

50-1.03B(2)(d)(i) General

Bond the post-tensioned prestressing steel to the concrete by completely filling the entire void space between the duct and the prestressing steel with grout.
Ducts, vents, and grout caps must be clean and free from water and deleterious materials that would impair bonding of the grout or interfere with grouting procedures. Compressed air used for cleaning must be clean, dry, and free of oil or contaminants.
Prevent the leakage of grout through the anchorage assembly by positive mechanical means.
Before starting daily grouting activities, drain the pump system to remove any water from the piping system.
Break down and thoroughly clean the pump and piping system after each grouting session.
After completing duct grouting activities:

1. Abrasive blast clean and expose the aggregate of concrete surfaces where concrete is to be placed to cover and encase the anchorage assemblies
2. Remove the ends of vents 1 inch below the roadway surface

50-1.03B(2)(d)(ii) Mixing and Proportioning

Proportion solids by weight to an accuracy of 2 percent.
Proportion liquids by weight or volume to an accuracy of 1 percent.
Mix the grout as follows:

DocuSign Envelope ID: 894511EA-295B-49EB-A393-D26A6837FDD4

1. Add water to the mixer followed by the other ingredients.
2. Mix the grout with mechanical mixing equipment that produces a uniform and thoroughly mixed grout without an excessive temperature increase or loss of properties of the mixture.
3. Do not exceed 5 gal of water per 94 lb of cement or the quantity of water in the manufacturer's instructions, whichever is less.
4. Agitate the grout continuously until the grout is pumped. Do not add water after the initial mixing.

50-1.03B(2)(d)(iii) Placing

Pump grout into the duct within 30 minutes of the 1st addition of the mix components.
Inject grout from the lowest point of the duct in an uphill direction in 1 continuous operation maintaining a one-way flow of the grout. You may inject from the lowest anchorage if complete filling is ensured.
Before injecting grout, open all vents.
Continuously discharge grout from the vent to be closed. Do not close any vent until free water, visible slugs of grout, and entrapped air have been ejected and the consistency of the grout flowing from the vent is equivalent to the injected grout.
Pump the grout at a rate of 16 to 50 feet of duct per minute.
Conduct grouting at a pressure range of 10 to 50 psi measured at the grout inlet. Do not exceed maximum pumping pressure of 150 psi at the grout inlet.
As grout is injected, close the vents in sequence in the direction of flow starting with the closest vent.
Before closing the final vent at the grout cap, discharge at least 2 gal of grout into a clean receptacle.
Bleed all high point vents.
Lock a pressure of 5 psi into the duct by closing the grout inlet valve.

50-1.03B(2)(d)(iv) Weather Conditions

If hot weather conditions will contribute to quick stiffening of the grout, cool the grout by authorized methods as necessary to prevent blockages during pumping activities.
If freezing weather conditions are anticipated during and following the placement of grout, provide adequate means to protect the grout in the ducts from damage by freezing.

50-1.03B(2)(d)(v) Curing

During grouting and for a period of 24 hours after grouting, eliminate vibration from contractor controlled sources within 100 feet of the span in which grouting is taking place, including from moving vehicles, jackhammers, large compressors or generators, pile driving activities, soil compaction, and falsework removal. Do not vary loads on the span.
For PC concrete members, do not move or disturb the members after grouting for 24 hours. If ambient temperature drops below 50 degrees F, do not move or disturb the members for 48 hours.
Do not remove or open valves until grout has cured for at least 24 hours.

50-1.03B(2)(d)(vi) Grouting Equipment

Grouting equipment must be:
1. Capable of grouting at a pressure of at least 100 psi
2. Equipped with a pressure gage having a full-scale reading of not more than 300 psi
3. Able to continuously grout the longest tendon on the project in less than 20 minutes

Grout must pass through a screen with clear openings of 1/16 inch or less before entering the pump.
Fit grout injection pipes, ejection pipes, and vents with positive mechanical shutoff valves capable of withstanding the pumping pressures. Do not remove or open valves until the grout has set. If

DocuSign Envelope ID: 894511EA-295B-49EB-A393-D26A6837FDD4

authorized, you may substitute mechanical valves with suitable alternatives after demonstrating their effectiveness.
Provide a standby grout mixer and pump.

50-1.03B(2)(d)(vii) Grout Storage

Store grout in a dry environment.

50-1.03B(2)(d)(viii) Blockages

If the grouting pressure reaches 150 psi, close the inlet and pump the grout at the next vent that has just been or is ready to be closed as long as a one-way flow is maintained. Do not pump grout into a succeeding outlet from which grout has not yet flowed.
When complete grouting of the tendon cannot be achieved by the steps specified, stop the grouting operation.

50-1.03B(2)(d)(ix) Secondary Grouting

Perform secondary grouting by vacuum grouting under the direct supervision of a person who has been trained and has experience in the use of vacuum grouting equipment and procedures.
The vacuum grouting process must be able to determine the size of the void and measure the volume of grout filling the void.
Vacuum grouting equipment must consist of:

1. Volumeter for the measurement of void volume
2. Vacuum pump with capacity of at least 10 cfm and equipped with a flow meter capable of measuring the amount of grout being injected

50-1.03B(2)(d)(x) Vertical Tendon Grouting

Provide a standpipe at the upper end of the tendon to collect bleed water and allow it to be removed from the grout. The standpipe must be large enough to prevent the grout elevation from dropping below the highest point of the upper anchorage device. If the grout level drops to the highest point of the upper anchorage device, immediately add grout to the standpipe.
Remove the standpipe after the grout has hardened.
For vertical tendons in excess of 100 feet high or if grouting pressure exceeds 145 psi, inject grout at a higher vent from which grout has already flowed to maintain one-way flow.

50-1.03B(2)(d)(xi) Vents

Place vents at the following locations:

1. Anchorage areas at both ends of the tendon
2. Each high point
3. 4 feet upstream and downstream of each crest of a high point
4. Each change in the cross section of duct

Add to section 50-1.03B(2):

09-16-11

50-1.03B(2)(e) Debonding Prestressing Strands

Where shown, debond prestressing strands by encasing the strands in plastic sheathing along the entire length shown and sealing the ends of the sheathing with waterproof tape.
Distribute the debonded strands symmetrically about the vertical centerline of the girder. The debonded lengths of pairs of strands must be equal.
Do not terminate debonding at any one cross section of the member for more than 40 percent of the debonded strands or 4 strands, whichever is greater.

DocuSign Envelope ID: 894511EA-295B-49EB-A393-D26A6837FDD4

Thoroughly seal the ends with waterproof tape to prevent the intrusion of water or cement paste before placing the concrete.

^^

51 CONCRETE STRUCTURES

07-18-14

Replace the paragraphs of section 51-1.01A with:

10-19-12

Section 51-1 includes general specifications for constructing concrete structures.
Earthwork for the following concrete structures must comply with section 19-3:

1. Sound wall footings
2. Sound wall pile caps
3. Culverts
4. Barrier slabs
5. Junction structures
6. Minor structures
7. Pipe culvert headwalls, endwalls, and wingwalls for a pipe with a diameter of 5 feet or greater

Falsework must comply with section 48-2.
Joints must comply with section 51-2.
Elastomeric bearing pads must comply with section 51-3.
Reinforcement for the following concrete structures must comply with section 52:

1. Sound wall footings
2. Sound wall pile caps
3. Barrier slabs
4. Junction structures
5. Minor structures
6. PC concrete members

You may use RSC for a concrete structure only where the specifications allow the use of RSC.

Replace "sets" in the 1st paragraph of section 51-1.01C(2) with:

07-19-13

copies

Replace the heading of section 51-1.01D(4) with:

04-19-13

Testing Concrete Surfaces

Add to section 51-1.01D(4)(a):

04-19-13

The Engineer tests POC deck surfaces for smoothness and crack intensity.

Add to the list in the 1st paragraph of section 51-1.01D(4)(b):

04-19-13

3. Completed deck surfaces, including ramps and landings of POCs

DocuSign Envelope ID: 894511EA-295B-49EB-A393-D26A6837FDD4

Replace the 4th paragraph in section 51-1.01D(4)(b) with:

04-19-13

Except for POCs, surface smoothness is tested using a bridge profilograph under California Test 547. Two profiles are obtained in each lane approximately 3 feet from the lane lines and 1 profile is obtained in each shoulder approximately 3 feet from the curb or rail face. Profiles are taken parallel to the direction of traffic.

Add between the 5th and 6th paragraphs of section 51-1.01D(4)(b):

04-19-13

POC deck surfaces must comply with the following smoothness requirements:

1. Surfaces between grade changes must not vary more than 0.02 foot from the lower edge of a 12-foot-long straightedge placed parallel to the centerline of the POC
2. Surface must not vary more than 0.01 foot from the lower edge of a 6-foot-long straightedge placed perpendicular to the centerline of the POC

Add to section 51-1.01D(4)(d):

04-19-13

The Engineer measures crack intensity of POC deck surfaces after curing, before prestressing, and before falsework release. Clean the surface for the Engineer to measure surface crack intensity.
In any 100 sq ft portion of a new POC deck surface, if there are more than 10 feet of cracks having a width at any point of over 0.02 inch, treat the deck with methacrylate resin under section 15-5.05. Treat the entire deck width between the curbs to 5 feet beyond where the furthest continuous crack emanating from the 100 sq ft section is 0.02 inch wide. Treat the deck surface before grinding.

Replace the 2nd paragraph of section 51-1.02B with:

07-19-13

Except for minor structures, the minimum required 28-day compressive strength for concrete in structures or portions of structures is the compressive strength described or 3,600 psi, whichever is greater.

Add to section 51-1.03C(2)(c)(i):

04-20-12

Permanent steel deck forms are only allowed where shown or if specified as an option in the special provisions.

Replace the 3rd paragraph of section 51-1.03C(2)(c)(ii) with:

04-20-12

Compute the physical design properties under AISI's *North American Specification for the Design of Cold-Formed Steel Structural Members*.

Replace the 8th paragraph of section 51-1.03D(1) with:

10-19-12

Except for concrete placed as pipe culvert headwalls and endwalls, slope paving and aprons, and concrete placed under water, consolidate concrete using high-frequency internal vibrators within

DocuSign Envelope ID: 894511EA-295B-49EB-A393-D26A6837FDD4

15 minutes of placing concrete in the forms. Do not attach vibrators to or hold them against forms or reinforcing steel. Do not displace reinforcement, ducts, or prestressing steel during vibrating.

Add to section 51-1.03E(5):

08-05-11

Drill the holes without damaging the adjacent concrete. If reinforcement is encountered during drilling before the specified depth is attained, notify the Engineer. Unless coring through the reinforcement is authorized, drill a new hole adjacent to the rejected hole to the depth shown.

Add to section 51-1.03F(5)(a):

04-19-13

For approach slabs, sleeper slabs, and other roadway surfaces of concrete structures, texture the roadway surface as specified for bridge deck surfaces in section 51-1.03F(5)(b).

Replace "Reserved" in section 51-1.03F(5)(b) with:

07-18-14

51-1.03F(5)(b)(i) General

Except for bridge widenings, texture roadway surfaces of bridge decks, approach slabs, and sleeper slabs, and other roadway surfaces of concrete structures longitudinally by grinding and grooving or by longitudinal tining.

For bridge widenings, texture the roadway surfaces longitudinally by longitudinal tining.

04-20-12

In freeze-thaw areas, do not texture PCC surfaces of bridge decks.

51-1.03F(5)(b)(ii) Grinding and Grooving

When texturing the deck surface by grinding and grooving, place a 1/4 inch of sacrificial concrete cover on the bridge deck above the finished grade shown. Place items to be embedded in the concrete based on the final profile grade elevations shown. Construct joint seals after completing the grinding and grooving.

Before grinding and grooving, deck surfaces must comply with the smoothness and deck crack treatment requirements.

Grind and groove the deck surface as follows:

1. Grind the surface to within 18 inches of the toe of the barrier under section 42-3. Grinding must not reduce the concrete cover on reinforcing steel to less than 1-3/4 inches.
2. Groove the ground surfaces longitudinally under section 42-2. The grooves must be parallel to the centerline.

51-1.03F(5)(b)(iii) Longitudinal Tining

When texturing the deck surface by longitudinal tining, perform initial texturing with a burlap drag or broom device that produces striations parallel to the centerline. Perform final texturing with spring steel tines that produce grooves parallel with the centerline.

The tines must:

1. Be rectangular in cross section
2. Be from 3/32 to 1/8 inch wide on 3/4-inch centers
3. Have enough length, thickness, and resilience to form grooves approximately 3/16 inch deep

Construct grooves to within 6 inches of the layout line of the concrete barrier toe. Grooves must be from 1/8 to 3/16 inch deep and 3/16 inch wide after concrete has hardened.

DocuSign Envelope ID: 894511EA-295B-49EB-A393-D26A6837FDD4

For irregular areas and areas inaccessible to the grooving machine, you may hand construct grooves. Hand-constructed grooves must comply with the specifications for machine-constructed grooves.

Tining must not cause tearing of the deck surface or visible separation of coarse aggregate at the surface.

Add to section 51-1.03F:

04-19-13

51-1.03F(6) Finishing Pedestrian Overcrossing Surfaces

Construct deck surfaces, including ramps and landings of POCs to the grade and cross section shown. Surfaces must comply with the specified smoothness, surface texture, and surface crack requirements.

The Engineer sets deck elevation control points for your use in establishing the grade and cross section of the deck surface. The grade established by the deck elevation control points includes all camber allowances. Except for landings, elevation control points include the beginning and end of the ramp and will not be closer together than approximately 8 feet longitudinally and 4 feet transversely to the POC centerline. Landing elevation control points are at the beginning and the end of the landing.

Broom finish the deck surfaces of POCs. Apply the broom finish perpendicular to the path of travel. You may apply water mist to the surface immediately before brooming.

Clean any discolored concrete by abrasive blast cleaning or other authorized methods.

Replace the paragraphs of section 51-1.04 with:

10-19-12

If concrete involved in bridge work is not designated by type and is not otherwise paid for under a separate bid item, the concrete is paid for as structural concrete, bridge.

The payment quantity for structural concrete includes the volume in the concrete occupied by bar reinforcing steel, structural steel, prestressing steel materials, and piling.

The payment quantity for seal course concrete is the actual volume of seal course concrete placed except the payment quantity must not exceed the volume of concrete contained between vertical planes 1 foot outside the neat lines of the seal course shown. The Department does not adjust the unit price for an increase or decrease in the seal course concrete quantity.

Structural concrete for pier columns is measured as follows:

1. Horizontal limits are vertical planes at the neat lines of the pier column shown.
2. Bottom limit is the bottom of the foundation excavation in the completed work.
3. Upper limit is the top of the pier column concrete shown.

The payment quantity for drill and bond dowel is determined from the number and depths of the holes shown.

Replace section 51-2.01B(2) with:

04-19-13

51-2.01B(2) Reserved

04-19-13

Delete the 4th paragraph of section 51-2.01C.

DocuSign Envelope ID: 894511EA-295B-49EB-A393-D26A6837FDD4

Replace "SSPC-QP 3" in the 1st paragraph of section 51-2.02A(2) with:

10-19-12

AISC-420-10/SSPC-QP 3

Replace the 2nd and 3rd paragraphs of section 51-2.02B(3)(b) with:

04-20-12

Concrete saws for cutting grooves in the concrete must have diamond blades with a minimum thickness of 3/16 inch. Cut both sides of the groove simultaneously for a minimum 1st pass depth of 2 inches. The completed groove must have:

1. Top width within 1/8 inch of the width shown or ordered
2. Bottom width not varying from the top width by more than 1/16 inch for each 2 inches of depth
3. Uniform width and depth

Cutting grooves in existing decks includes cutting any conflicting reinforcing steel.

Replace "sets" in the 1st and 2nd paragraphs of section 51-2.02D(1)(c)(ii) with:

04-19-13

copies

Replace "set" in the 7th paragraph of section 51-2.02D(1)(c)(ii) with:

04-19-13

copy

Add to the 1st paragraph of section 51-2.02D(3):

04-19-13

POC deck surfaces must comply with section 51-1.03F(6) before placing and anchoring joint seal assemblies.

Replace "sets" in the 2nd paragraph of section 51-2.02E(1)(c) with:

04-19-13

copies

Replace "set" in the 6th paragraph of section 51-2.02E(1)(c) with:

04-19-13

copy

Replace the 2nd paragraph of section 51-2.02E(1)(e) with:

08-05-11

Except for components in contact with the tires, the design loading must be the AASHTO LRFD Bridge Design Specifications Design Truck with 100 percent dynamic load allowance. Each component in contact with the tires must support a minimum of 80 percent of the AASHTO LRFD Bridge Design Specifications Design Truck with 100 percent dynamic load allowance. The tire contact area must be 10 inches measured normal to the longitudinal assembly axis by 20 inches wide. The assembly must provide a smooth-riding joint without slapping of components or tire rumble.

DocuSign Envelope ID: 894511EA-295B-49EB-A393-D26A6837FDD4

Replace "sets" in the 1st and 2nd paragraphs of section 51-2.02F(1)(c) with:

04-19-13

copies

Add between the 1st and 2nd paragraphs of section 51-4.01A:

10-19-12

Prestressing concrete members must comply with section 50.

04-20-12

Delete the 2nd paragraph of section 51-4.01A.

Replace the 3rd paragraph of section 51-4.01C(2) with:

04-20-12

For segmental or spliced-girder construction, shop drawings must include the following additional information:

1. Details showing construction joints or closure joints
2. Arrangement of bar reinforcing steel, prestressing tendons, and pressure-grouting pipe
3. Materials and methods for making closures
4. Construction joint keys and surface treatment
5. Other requested information

For segmental girder construction, shop drawings must include concrete form and casting details.

Replace "sets" in the 1st paragraph of section 51-4.01C(3) with:

04-19-13

copies

10-19-12

Delete the 1st and 2nd paragraphs of section 51-4.02A.

Replace the 3rd paragraph of section 51-4.02B(2) with:

04-20-12

For segmental or spliced-girder construction, materials for construction joints or closure joints at exterior girders must match the color and texture of the adjoining concrete.

Add to section 51-4.02B(2):

04-20-12

At spliced-girder closure joints:

1. If shear keys are not shown, the vertical surfaces of the girder segment ends must be given a coarse texture as specified for the top surface of PC members.
2. Post-tensioning ducts must extend out of the vertical surface of the girder segment closure end sufficiently to facilitate splicing of the duct.

For spliced girders, pretension strand extending from the closure end of the girder segment to be embedded in the closure joint must be free of mortar, oil, dirt, excessive mill scale and scabby rust, and other coatings that would destroy or reduce the bond.

DocuSign Envelope ID: 894511EA-295B-49EB-A393-D26A6837FDD4

Add to section 51-4.03B:

04-20-12

The specifications for prestressing force distribution and sequencing of stressing in the post-tensioning activity in 50-1.03B(2)(a) do not apply if post-tensioning of spliced girders before starting deck construction is described. The composite deck-girder structure must be post-tensioned in a subsequent stage.

Temporary spliced-girder supports must comply with the specifications for falsework in section 48-2.

Before post-tensioning of spliced girders, remove the forms at CIP concrete closures and intermediate diaphragms to allow inspection for concrete consolidation.

Add to section 51-5.01A:

07-19-13

Structure excavation and backfill must comply with section 19-3.

Treated permeable base must comply with section 29.

Replace the paragraph in section 51-5.02G with:

04-18-14

HMA for a temporary roadway structural section must comply with the specifications for minor HMA in section 39.

07-19-13

Delete the 1st paragraph of section 51-5.03B(3).

07-19-13

Delete the 2nd paragraph of section 51-5.03D(1).

Add between the 1st and 2nd paragraphs of section 51-7.01A:

10-19-12

Minor structures include:

1. Pipe culvert headwalls and endwalls for a pipe with a diameter less than 5 feet
2. Drainage inlets
3. Other structures described as minor structures

10-19-12

Delete the 4th paragraph of section 51-7.01A.

Replace the 1st and 2nd paragraphs of section 51-7.01B with:

10-19-12

Concrete must comply with the specifications for minor concrete.

Add to section 51:

10-19-12

51-8–51-15 RESERVED

DocuSign Envelope ID: 894511EA-295B-49EB-A393-D26A6837FDD4

52 REINFORCEMENT

07-18-14

Add to section 52-1.01A:

07-20-12

Splicing of bar reinforcement must comply with section 52-6.

Replace the 1st and 2nd paragraphs of section 52-1.02B with:

10-19-12

Reinforcing bars must be deformed bars complying with ASTM A 706/A 706M, Grade 60, except you may use:

1. Deformed bars complying with ASTM A 615/A 615M, Grade 60, in:
   - 1.1. Junction structures
   - 1.2. Sign and signal foundations
   - 1.3. Minor structures
   - 1.4. Concrete crib members
   - 1.5. Mechanically-stabilized-embankment concrete panels
   - 1.6. Masonry block sound walls
2. Deformed or plain bars complying with ASTM A 615/A 615M, Grade 40 or 60, in:
   - 2.1. Slope and channel paving
   - 2.2. Concrete barriers Type 50 and 60
3. Plain bars for spiral or hoop reinforcement in structures and concrete piles

Add to the list in the 3rd paragraph of section 52-1.02B:

04-20-12

9. Shear reinforcement stirrups in PC girders

Replace the 9th paragraph of section 52-1.03D with:

07-18-14

Terminate each unit of spiral reinforcement at both ends by lapping the spiral reinforcement on itself for at least 80 diameters followed by (1) a 135-degree hook with a 6-inch tail hooked around an intersecting longitudinal bar or (2) a mechanical lap splice coupler. Discontinuities in spiral reinforcement may be made only where shown or authorized. The spiral on each side of a discontinuity or a lap splice is a separate unit. Where discontinuities in spiral reinforcement are not allowed, splice the spiral reinforcement. Lap splices in spiral reinforcement must be lapped at least 80 diameters followed by (1) a 135-degree hook with a 6-inch tail hooked around an intersecting longitudinal bar or (2) a mechanical lap splice coupler.

Add to section 52-5.01D:

07-18-14

52-5.01D(4) Quality Assurance Testing

Secure, identify, and transport QA headed bar reinforcement test samples to METS as specified for splice test samples in section 52-5.01D(3)(b).

DocuSign Envelope ID: 894511EA-295B-49EB-A393-D26A6837FDD4

The Department tests headed bar reinforcement as specified for QC testing in section 52-5.01D(3)(b).
The Department will notify you of the QA test results for each bundle of 4 test samples of splices within 3 business days after METS receives the bundle unless more than 1 bundle is received on the same day, in which case allow 2 additional business days for each additional bundle received.

Replace the 6th paragraph of section 52-6.01D(4)(a) with:

01-18-13

Before performing service splice or ultimate butt splice testing, perform total slip testing on the service splice or ultimate butt splice test samples under section 52-6.01D(4)(b).

Replace section 52-6.02D with:

10-21-11

52-6.02D Ultimate Butt Splice Requirements

When tested under California Test 670, ultimate butt splice test samples must demonstrate necking as either of the following:

1. For "Necking (Option I)," the test sample must rupture in the reinforcing bar outside of the affected zone and show visible necking.
2. For "Necking (Option II)," the largest measured strain must be at least:
   - 2.1. Six percent for no. 11 and larger bars
   - 2.2. Nine percent for no. 10 and smaller bars

Replace the 2nd and 3rd paragraphs of section 52-6.03B with:

01-18-13

Do not splice the following by lapping:

1. No. 14 bars
2. No. 18 bars
3. Hoops
4. Reinforcing bars where you cannot provide a minimum clear distance of 2 inches between the splice and the nearest adjacent bar

^^

53 SHOTCRETE

07-19-13

Replace the 2nd and 3rd paragraphs of section 53-2.01D(1) with:

07-19-13

Obtain and test all cores for compressive strength under ASTM C 42/C 42M at an authorized laboratory. The compressive strength is the average strength of the 3 cores.
Shotcrete must have a minimum compressive strength of 3,600 psi, unless otherwise described. The shotcrete must attain the minimum compressive strength at 28 days, except 42 days are allowed for shotcrete with a described minimum compressive strength greater than 3,600 psi.

^^

DocuSign Envelope ID: 894511EA-295B-49EB-A393-D26A6837FDD4

54 WATERPROOFING

04-18-14

Add between "be" and "3/8 inch" in the 3rd paragraph of section 54-4.02C:

04-20-12

at least

04-18-14

Delete the 3rd paragraph of section 54-5.01A.

04-18-14

Delete "and HMA" in the 2nd paragraph of section 54-5.03.

Replace the last paragraph of section 54-5.03 with:

04-18-14

Do not allow traffic on the seal until HMA is placed over it.

Add to section 54:

07-19-13

54-7 SILANE WATERPROOFING TREATMENT

Reserved

54-8–54-10 RESERVED

^^

55 STEEL STRUCTURES

07-19-13

07-19-13

Delete the 3rd paragraph in section 55-1.01C(1).

Replace the 3rd sentence of the 4th paragraph in section 55-1.01C(1) with:

07-19-13

For ASTM F 1554 anchor bolts, include chemical composition and carbon equivalence for each heat of steel.

Add to section 55-1.01C(1):

07-19-13

For HS connections, submit a record of which lots are used in each joint as an informational submittal.

Replace "sets" at each occurrence in the 1st paragraph of section 55-1.01C(2) with:

04-19-13

copies

Replace the list in the 2nd paragraph of section 55-1.01C(2) with:

07-19-13

1. Sequence of shop and field assembly and erection. For continuous members, include proposed steel erection procedures with calculations that show girder capacity and geometry will be correct.

DocuSign Envelope ID: 894511EA-295B-49EB-A393-D26A6837FDD4

2. Welding sequences and procedures.
3. Layout drawing of the entire structure with locations of butt welded splices.
4. Locations of temporary supports and welds.
5. Vertical alignment of girders at each stage of erection.
6. Match-marking diagrams.
7. Details for connections not shown or dimensioned on the plans.
8. Details of allowed options incorporated in the work.
9. Direction of rolling of plates where orientation is specified.
10. Distortion control plan.
11. Dimensional tolerances. Include measures for controlling accumulated error to meet overall tolerances.
12. Material specification and grade listed on the bill of materials.
13. Identification of tension members and fracture critical members.
14. Proposed deviations from plans, specifications, or previously submitted shop drawings.
15. Contract plan sheet references for details.

Replace items 2 and 3 in the list in the 1st paragraph of section 55-1.01C(3) with:

07-19-13

2. Tension flanges and webs of horizontally curved girders
3. Hanger plates

Replace the 2nd paragraph of section 55-1.01C(3) with:

07-19-13

Furnish plates, shapes, or bars with extra length to provide for removal of check samples.

07-19-13

Delete the 1st and 2nd sentences in the 3rd paragraph of section 55-1.01C(3).

Replace the 4th paragraph of section 55-1.01C(3) with:

07-19-13

Remove material for test samples in the Engineer's presence. Test samples for plates over 24 inches wide must be 10 by 12 inches with the long dimension transverse to the direction of rolling. Test samples for other products must be 12 inches long taken in the direction of rolling with a width equal to the product width.

Replace the 1st sentence of the 6th paragraph in section 55-1.01C(3) with:

07-19-13

Results of check testing are delivered to you within 20 days of receipt of samples at METS.

07-19-13

Delete the 2nd paragraph of section 55-1.01D(1).

Replace the 2nd sentence of the 4th paragraph in section 55-1.01D(1) with:

07-19-13

The calibration must be performed by an authorized repair and calibration center approved by the tool manufacturer.

DocuSign Envelope ID: 894511EA-295B-49EB-A393-D26A6837FDD4

Add to section 55-1.01D(1):

07-19-13

For bolts installed as snug tight, rotational capacity testing and installation tension testing are not required.
In addition to NDT requirements in AWS D1.5, ultrasonically test 25 percent of all main member tension butt welds in material over 1/2 inch thick.
Perform NDT on 100 percent of each pin as follows:

1. MT under ASTM A 788, S 18, with no linear indication allowed exceeding 3 mm
2. UT under ASTM A 788, S 20, level S and level DA in two perpendicular directions

The Engineer determines the location of all NDT testing for welding.

07-19-13

Delete the 2nd paragraph of section 55-1.01D(3)(a).

Replace section 55-1.01D(4)(b) with:

07-19-13

Perform rotational capacity testing on each rotational capacity lot under section 55-1.01D(3)(b) at the job site before installation.

Replace the 1st sentence of the 2nd paragraph in section 55-1.01D(4)(c) with:

07-19-13

Test 3 representative HS fastener assemblies under section 8 of *Specification for Structural Joints Using High-Strength Bolts* of the RCSC.

Replace the 1st paragraph in section 55-1.01D(4)(d) with:

07-19-13

Perform fastener tension testing to verify minimum tension in HS bolted connections no later than 48 hours after all fasteners in a connection have been tensioned.

Replace the 3rd paragraph in section 55-1.01D(4)(d) with:

07-19-13

Test 10 percent of each type of fastener assembly in each HS bolted connection for minimum tension using the procedure described in section 10 of *Specification for Structural Joints Using High-Strength Bolts* of the RCSC. Check at least 2 assemblies per connection. For short bolts, determine the inspection torque using steps 1 through 7 of "Arbitration of Disputes, Torque Method-Short Bolts" in *Structural Bolting Handbook* of the Steel Structures Technology Center.

DocuSign Envelope ID: 894511EA-295B-49EB-A393-D26A6837FDD4

Replace the 1st table in the 1st paragraph of section 55-1.02A(1) with:

07-19-13

Structural Steel

Material	Specification
Carbon steel	ASTM A 709/A 709M, Grade 36 or {ASTM A36/A36M}[a]
HS low alloy columbium vanadium steel	ASTM A 709/A 709M, Grade 50 or {ASTM A 992/A 992M or ASTM A 572/A 572M, Grade 50}[a]
HS low alloy structural steel	ASTM A 709/A 709M, Grade 50W or Grade HPS 50W, or {ASTM A 588/A 588M}[a]
HS low alloy structural steel plate	ASTM A 709/A 709M, Grade HPS 70W
High-yield strength quenched and tempered alloy steel plate suitable for welding	ASTM A 709/A 709M, Grade 100, Grade 100W, or Grade HPS 100W, or {ASTM A 514/A 514M}[a]

[a]Grades you may substitute for the equivalent ASTM A 709 steel subject to the modifications and additions specified and to the requirements of ASTM A 709.

Replace the 2nd table in the 1st paragraph of section 55-1.02A(1) with:

07-19-13

Fasteners

Material	Specification
Steel fastener components for general applications:	
Bolts and studs	ASTM A 307
Anchor bolts	ASTM F 1554[a]
HS bolts and studs	ASTM A 449, Type 1[a]
HS threaded rods	ASTM A 449, Type 1 [a]
HS nonheaded anchor bolts	ASTM F 1554, Grade 105, Class 2A[a]
Nuts	ASTM A 563, including appendix X1[b]
Washers	ASTM F 844
Hardened Washers	ASTM F 436, Type 1, including S1 supplementary requirements
Components of HS steel fastener assemblies for use in structural steel joints:	
Bolts	ASTM A 325, Type 1
Tension control bolts	ASTM F 1852, Type 1
Nuts	ASTM A 563, including appendix X1[b]
Hardened washers	ASTM F 436, Type 1, Circular, including S1 supplementary requirements
Direct tension indicators	ASTM F 959, Type 325, zinc-coated

[a]Use hardened washers.
[b]Zinc-coated nuts tightened beyond snug or wrench tight must be furnished with a dry lubricant complying with supplementary requirement S2 in ASTM A 563.

DocuSign Envelope ID: 894511EA-295B-49EB-A393-D26A6837FDD4

Replace the 3rd table in the 1st paragraph of section 55-1.02A(1) with:

07-19-13

Other Materials

Material	Specification
Carbon steel for forgings, pins, and rollers	ASTM A 668/A 668M, Class D
Alloy steel for forgings	ASTM A 668/A 668M, Class G
Pin nuts	ASTM A 709/A 709M or ASTM A 563, including appendix X1[a]
Carbon-steel castings	ASTM A 27/A 27M, Grade 65-35, Class 1
Malleable iron castings	ASTM A 47/A 47M, Grade 32510
Gray iron castings	ASTM A 48, Class 30B
Carbon steel structural tubing	ASTM A 500/A 500M, Grade B, ASTM A 501, ASTM A 847/A 847M, or ASTM A 1085
Steel pipe[b]	ASTM A 53, Type E or S, Grade B; ASTM A 106, Grade B; or ASTM A 139, Grade B
Stud connectors	ASTM A 108

[a]Zinc-coated nuts tightened beyond snug or wrench tight must be furnished with a dry lubricant complying with supplementary requirement S2 in ASTM A 563.
[b]Hydrostatic testing will not apply.

Replace the table in the 1st paragraph in section 55-1.02A(2) with:

07-19-13

Material complying with ASTM A 709/A 709M	CVN impact value (ft-lb at temperature)
Grade 36	15 at 40 ºF
Grade 50[a] (Thickness up to 2 inches)	15 at 40 ºF
Grade 50W[a] (Thickness up to 2 inches)	15 at 40 ºF
Grade 50[a] (Thickness over 2 inches up to 4 inches)	20 at 40 ºF
Grade 50W[a] (Thickness over 2 inches up to 4 inches)	20 at 40 ºF
Grade HPS 50W[a] (Thickness up to 4 inches)	20 at 10 ºF
Grade HPS 70W (Thickness up to 4 inches)	25 at -10 ºF
Grade 100 (Thickness of 2-1/2 inches or less)	25 at 0 ºF
Grade 100W (Thickness over 2-1/2 inches up to 4 inches)	35 at 0 ºF
Grade HPS 100W (Thickness of 2-1/2 inches or less)	25 at -30 ºF
Grade HPS 100W (Thickness over 2-1/2 inches up to 4 inches)	35 at -30 ºF

[a]If the material yield strength is more than 65,000 psi, reduce the temperature for the CVN impact value 15 degrees F for each increment of 10,000 psi above 65,000 psi.

Replace the 1st sentence of the 1st paragraph in section 55-1.02A(5) with:

07-19-13

Steel, gray iron, and malleable iron castings must have continuous fillets cast in place in reentrant angles.

07-19-13

Delete the 3rd and 4th sentences in the 2nd paragraph in section 55-1.02A(5).

DocuSign Envelope ID: 894511EA-295B-49EB-A393-D26A6837FDD4

Replace the 1st paragraph of section 55-1.02B(1) with:

07-19-13

Section 55-1.02B(1) applies to work performed at the source and at the job site.

Replace the 4th paragraph in section 55-1.02B(1) with:

07-19-13

Ends of girder stiffeners shown as tight-fit must bear on the girder flange with at least point bearing. Local clearances between the end of the stiffener and the girder flange must be at most 1/16 inch.

Replace the 1st sentence of the 5th paragraph in section 55-1.02B(1) with:

07-19-13

Fabricate floor beams, stringers, and girders having end connection angles to exact length back to back of connection angles.

Add to the 7th paragraph in section 55-1.02B(1):

07-19-13

Use low-stress stamps for fracture critical members and tension members.

Replace the 2nd sentence of the 9th paragraph in section 55-1.02B(1) with:

07-19-13

Slightly round edges and sharp corners, including edges marred, cut, or roughened during handling or erection.

Replace the 3rd paragraph in section 55-1.02B(2) with:

07-19-13

Instead of machining, you may heat straighten steel not in contact with other metal bearing surfaces if the above tolerances are met.

Replace item 2 in the list in the 1st paragraph of section 55-1.02B(3) with:

07-19-13

2. Radius of bend measured to the concave face must comply with *Manual of Steel Construction* of the AISC

Replace the 1st sentence of the 2nd paragraph in section 55-1.02B(3) with:

07-19-13

Plates to be bent to a smaller radius than specified in *Manual of Steel Construction* of the AISC must be bent hot.

Replace the introductory clause of the 2nd paragraph of section 55-1.02B(4) with:

07-19-13

Threads for pin ends and pin nuts 1-1/2 inches or more in diameter must comply with the following:

Replace the 3rd paragraph in section 55-1.02B(5) with:

07-19-13

Holes for pins must be:

1. True to the diameter specified.

DocuSign Envelope ID: 894511EA-295B-49EB-A393-D26A6837FDD4

2. At right angles to the member axis.
3. Parallel with each other except for pins where nonparallel holes are required.
4. Smooth and straight with the final surface produced by a finishing cut.

Replace the 1st paragraph in section 55-1.02B(6)(c) with:

07-19-13

Bolted connections using HS fastener assemblies must comply with *Specification for Structural Joints Using High-Strength Bolts* of the RCSC.

Replace the 7th paragraph in section 55-1.02B(6)(c) with:

07-19-13

For all bolts, thread stickout after tensioning must be at least flush with the outer nut face. At least 3 full threads must be located within the grip of the connection.

07-19-13

Delete the 3rd paragraph in section 55-1.02B(7)(a).

Add to section 55-1.02B(7)(a):

07-19-13

For welds indicated to be subject to tensile forces that are to receive RT, grind smooth and flush on both sides of welds before testing.
For groove weld surface profiles that interfere with NDT procedures, grind welds smooth and blend with the adjacent material.
For fillet weld surface profiles that interfere with NDT procedures, grind welds and blend the toes smoothly with the adjacent base metal.

Add to section 55-1.02B(7):

07-19-13

55-1.02B(7)(c) Steel Pedestrian Bridges

Reserved

Replace the 1st paragraph in section 55-1.02B(9) with:

07-19-13

Prepare and paint contact surfaces of HS bolted connections before assembly. Thoroughly clean all other surfaces of metal in contact to bare metal before assembly. Remove all rust, mill scale, and foreign material.

Replace the 1st sentence of the 4th paragraph in section 55-1.02B(9) with:

07-19-13

Preassemble truss work in lengths of at least 3 abutting panels and adjust members for line and camber.

Replace the 1st sentence of the 5th paragraph in section 55-1.02B(9) with:

07-19-13

Preassemble bolted splice joints for plate girders in lengths of at least 3 abutting sections and adjust abutting sections for line and camber.

DocuSign Envelope ID: 894511EA-295B-49EB-A393-D26A6837FDD4

Replace the 6th paragraph in section 55-1.02B(9) with:

07-19-13

Preassemble prepared splice joints for welded girders with abutting members and adjust for line and camber.

Replace the paragraphs in section 55-1.03C(1) with:

07-19-13

Reserved

Replace the 3rd sentence of the 1st paragraph in section 55-1.03C(2) with:

07-19-13

Attain full bearing on the concrete under bearing assemblies.

Replace the 3rd paragraph in section 55-1.03C(2) with:

07-19-13

During welding, protect bearings and bearing surfaces using authorized methods.

Replace section 55-1.03C(4) with:

07-19-13

55-1.03C(4) Continuous Members

Unless otherwise shown, structural steel girders are designed for continuity in supporting girder dead load. If erection procedures provide girder continuity for dead load, preassemble members with field joints in a no-load condition in a horizontal or an upright condition.
You may erect structural steel girders such that dead load girder continuity is not provided. If erection procedures do not provide girder continuity for dead load:

1. You may increase cross-sectional areas or change grades of steel to provide the specified capacity if authorized.
2. After erection, the erected structure must have a load-carrying capacity at least equal to the structure shown.

^^

56 SIGNS

07-19-13

Replace the 4th paragraph of section 56-3.01A with:

07-19-13

The types of sign structures include:

1. Truss
2. Bridge mounted
3. Tubular

Replace "sets" in the 1st paragraph of section 56-3.01C(2) with:

04-19-13

copies

DocuSign Envelope ID: 894511EA-295B-49EB-A393-D26A6837FDD4

07-20-12

Delete the 7th paragraph of section 56-3.02K(2).

Replace the 1st paragraph of section 56-3.02M(1) with:

07-19-13

Galvanize all ferrous metal parts of the following sign structure types:
1. Truss
2. Bridge mounted
3. Tubular

Add between the 1st and 2nd paragraphs of section 56-3.02M(1):

04-19-13

Clean and paint all ferrous metal parts of tubular sign structures after galvanizing, including the areas to be covered by sign panels. Do not paint sign structures other than tubular type unless specified in the special provisions.

Replace the headings and paragraphs in section 56-3.02M(3) with:

04-19-13

Where specified, clean and paint sign structures under section 59-5.

^^

57 WOOD AND PLASTIC LUMBER STRUCTURES

04-19-13

Replace "51-2.01C(3)" in the 1st paragraph of section 57-2.01C(3)(a) with:

10-19-12

57-2.01C(3)

Replace "sets" at each occurrence in the 1st paragraph of section 57-3.01C with:

04-19-13

copies

^^

58 SOUND WALLS

04-19-13

10-19-12

Delete the 3rd paragraph of section 58-1.01.

Replace the 1st paragraph of section 58-2.01D(5)(a) with:

08-05-11

You must employ a special inspector and an authorized laboratory to perform Level 1 inspections and structural tests of masonry to verify the masonry construction complies with section 1704, "Special Inspections," and section 2105, "Quality Assurance," of the 2007 CBC.

DocuSign Envelope ID: 894511EA-295B-49EB-A393-D26A6837FDD4

10-19-12

Delete the 1st paragraph of section 58-2.02F.

Replace "sets" at each occurrence in the 1st paragraph of section 58-4.01C with:

04-19-13

copies

^^

59 PAINTING

11-15-13

Replace "SSPC-SP 10" at each occurrence in section 59 with:

10-19-12

SSPC-SP 10/NACE no. 2

Replace "SSPC-SP 6" at each occurrence in section 59 with:

10-19-12

SSPC-SP 6/NACE no. 3

Replace "SSPC-CS 23.00" at each occurrence in section 59 with:

10-19-12

SSPC-CS 23.00/AWS C 2.23M/NACE no. 12

Replace "*Specification for Structural Joints Using ASTM A325 or A 490 Bolts*" in the 1st paragraph of section 59-2.01C(1) with:

07-19-13

Specification for Structural Joints Using High-Strength Bolts

Replace "SSPC-QP 3 or AISC SPE, Certification P-1 Enclosed" in item 3 in the list in the 1st paragraph of section 59-2.01D(1) with:

10-19-12

AISC-420-10/SSPC-QP 3 (Enclosed Shop)

Replace "*Specification for Structural Joints Using ASTM A325 or A 490 Bolts*" in the 1st paragraph of section 59-2.02 with:

07-19-13

Specification for Structural Joints Using High-Strength Bolts

Replace the paragraphs in section 59-2.03A with:

10-19-12

Clean and paint all exposed structural steel and other metal surfaces.
You must provide enclosures for cleaning and painting structural steel. Cleaning and painting of new structural steel must be performed in an Enclosed Shop as defined in AISC-420-10/SSPC-QP 3. Maintain atmospheric conditions inside enclosures within specified limits.
Except for blast cleaning within closed buildings, perform blast cleaning and painting during daylight hours.

DocuSign Envelope ID: 894511EA-295B-49EB-A393-D26A6837FDD4

Add to section 59-2.03B:

07-19-13

59-2.03B(3) Containment Systems

59-2.03B(3)(a) General

Construct containment systems when disturbing existing paint systems during bridge rehabilitation.
The containment system must be one of the following:
1. Ventilated containment system
2. Vacuum-shrouded surface preparation equipment and drapes and ground covers
3. Equivalent containment system if authorized

The containment system must contain all water, resulting debris, and visible dust produced when the existing paint system is disturbed.
Properly maintain the containment system while work is in progress and do not change the containment system unless authorized.
Containment systems over railroad property must provide the minimum clearances as specified in section 5-1.20C for the passage of railroad traffic.

59-2.03B(3)(b) Ventilated Containment Systems

59-2.03B(3)(b)(i) General

If flexible framing is used, support and fasten it to (1) prevent the escape of abrasive and blast materials due to whipping from traffic or wind and (2) maintain clearances.
If the wind speed reaches 50 mph or greater, relieve the wind pressure on the containment system using an authorized method.

59-2.03B(3)(b)(ii) Design Criteria

Scaffolding or supports for the ventilated containment system must not extend below the vertical clearance level nor to the ground line at locations within the roadbed.
For truss-type bridges, all connections of the ventilated containment system to the existing structure must be made through the deck, girder, stringer, or floor beam system. No connections are allowed that will cause bending stresses in a truss member.
The ventilated containment system must comply with section 7-1.02K(6)(e).
The minimum total design load for the ventilated containment system must consist of the sum of the dead and live vertical loads.
Dead and live loads are as follows:
1. Dead load must consist of the actual load of the ventilated containment system
2. Live loads for bridges with only spot blast cleaning work must consist of:
   - 2.1. Uniform load of at least 25 psf applied over the supported area
   - 2.2. Moving concentrated load of 1000 lb to produce maximum stress in the main supporting elements of the ventilated containment system
3. Live loads for bridges with 100 percent blast cleaning to bare metal must consist of:
   - 3.1. Uniform load of at least 45 psf, which includes 20 psf of sand load, applied over the supported area
   - 3.2. Moving concentrated load of 1000 lb to produce maximum stress in the main supporting elements of the ventilated containment system

Assumed horizontal loads do not need to be included in the design of the ventilated containment system.
Maximum allowable stresses must comply with section 48-2.01D(3)(c).

DocuSign Envelope ID: 894511EA-295B-49EB-A393-D26A6837FDD4

59-2.03B(3)(b)(iii) Ventilation

The ventilation system in the ventilated containment system must be of the forced input airflow type with fans or blowers.

Negative air pressure must be employed within the ventilated containment system and will be verified by visual methods by observing the concave nature of the ventilated containment system while taking into account wind effects or by using smoke or other visible means to observe airflow.

The input airflow must be properly balanced with the exhaust capacity throughout the range of operations.

The exhaust airflow of the ventilation system in the ventilated containment system must be forced into wet or dry dust collectors or bag houses.

Replace item 1 in the list in the 2nd paragraph of section 59-2.03C(1) with:

10-19-12

1. Apply a stripe coat of undercoat paint on all edges, corners, seams, crevices, interior angles, junctions of joining members, weld lines, and similar surface irregularities. The stripe coat must completely hide the surface being covered. If spot blast cleaning portions of the bridge, apply the stripe coat of undercoat paint before each undercoat and follow with the undercoat as soon as practical. If removing all existing paint from the bridge, apply the undercoat first as soon as practical and follow with the stripe coat of undercoat paint for each undercoat.

Replace the heading of section 59-2.03C(2) with:

04-19-13

Zinc Coating System

Add to section 59-2.03C(2)(a):

04-19-13

Coatings for new structural steel and connections between new and existing structural steel must comply with the requirements shown in the following table:

DocuSign Envelope ID: 894511EA-295B-49EB-A393-D26A6837FDD4

Zinc Coating System

Description	Coating	Dry film thickness (mils)
All new surfaces:		
Undercoat	Inorganic zinc primer, AASHTO M 300 Type I or II	4–8
Finish coat[a]	Exterior grade latex[b], 2 coats	2 minimum each coat, 4–8 total
Total thickness, all coats		8–14
Connections to existing structural steel:[c]		
Undercoat	Inorganic zinc primer, AASHTO M 300 Type I or II	4–8
Finish coat[a]	Exterior grade latex[b], 2 coats	2 minimum each coat, 4–8 total
Total thickness, all coats		8–14

[a]If no finish coats are described, a final coat of inorganic zinc primer is required.
[b]Exterior grade latex must comply with section 91-2.02 unless otherwise specified.
[c]Includes the following locations:

1. New and existing contact surfaces
2. Existing member surfaces under new HS bolt heads, nuts, or washers
3. Bare surfaces of existing steel after trimming, cutting, drilling, or reaming
4. Areas within a 4-inch radius from the point of application of heat for welding or flame cutting

Replace "*Specification for Structural Joints Using ASTM A325 or A 490 Bolts*" in the 7th paragraph of section 59-2.03C(2)(b)(i) with:

07-19-13

Specification for Structural Joints Using High-Strength Bolts

Add to section 59-2.03C:

04-19-13

59-2.03C(3) Moisture-Cured Polyurethane Coating System

Reserved

59-2.03C(4) State Specification Paint Waterborne Coating System

59-2.03C(4)(a) General

The State Specification PWB coating system for existing structural steel must comply with the requirements shown in the following table:

State Specification PWB Coating System

Surface	Description	State Specification PWB Coating	Dry film thickness (mils)
Surfaces cleaned to bare metal[a]:	1st undercoat	145	2–3
	2nd undercoat	146	2–3
	1st finish coat	171	1.5–3
	2nd finish coat	172	1.5–3
	Total thickness, all coats	--	7–12
Existing painted surfaces to be topcoated:	Undercoat	146	2–3
	1st finish coat	171	1.5–3
	2nd finish coat	172	1.5–3
	Total thickness, new coats	--	5–9

DocuSign Envelope ID: 894511EA-295B-49EB-A393-D26A6837FDD4

[a]Includes locations of spot blast cleaning

59-2.03C(4)(b) Finish Coats

11-15-13

Reserved

Add to section 59-5.01:

04-19-13

Where specified, prepare and paint sign structures under sections 59-2 and 59-3.
Instead of submitting proof of the certification complying with SSPC-QP 1, you may submit documentation with the painting quality work plan showing compliance with the requirements in section 3 of SSPC-QP 1.
Instead of submitting proof of the certification complying with SSPC-QP 2, you may submit documentation with the painting quality work plan showing compliance with the requirements in sections 4.2 through 4.4 of SSPC-QP 2, Category A.
Instead of submitting proof of the certification complying with AISC-420-10/SSPC-QP 3 (Enclosed Shop), you may submit documentation with the painting quality work plan showing compliance with the requirements in sections 5 through 18 of AISC-420-10/SSPC-QP3.

Replace the paragraphs of section 59-5.03 with:

04-19-13

59-5.03A General

You may prepare and paint sign structures before or after erection. After erection, repair damaged paint to the satisfaction of the Engineer.
The total dry film thickness of finish coats on contact surfaces of galvanized HS bolted connections (1) must be from 1 to 4 mils and (2) may be applied in 1 application.

59-5.03B Undercoating of Ungalvanized Surfaces

Blast-cleaned surfaces must receive a single undercoat consisting of an inorganic zinc coating as specified in AASHTO M 300, Type I or Type II, except:

1. The first 2 sentences of section 5.6 do not apply
2. Section 5.6.1 does not apply

If you propose to use a coating that is not on the Authorized Material List, submit the required documentation specified in section 5.6 of AASHTO M 300. Allow 30 days for the Engineer's review.

59-5.03C Testing of Inorganic Zinc Coating

Perform adhesion and hardness testing no sooner than 72 hours after application of the single undercoat of inorganic zinc coating.

59-5.03D Finish Coating

The exposed area of inorganic zinc coating must receive a minimum of 2 finish coats of exterior grade latex paint.
The 1st finish coat color must match no. 24558 of FED-STD-595. The 2nd finish coat color must match no. 24491 of FED-STD-595. The total dry film thickness of the applications of the 2nd finish coat must be not less than 2 mils.

DocuSign Envelope ID: 894511EA-295B-49EB-A393-D26A6837FDD4

Replace section 59-7 with:

07-19-13

59-7 STAINING CONCRETE AND SHOTCRETE

59-7.01 GENERAL

59-7.01A General

59-7.01A(1) Summary

Section 59-7.01 includes specifications for preparing and staining concrete and shotcrete surfaces using an acid stain.

59-7.01A(2) Definitions

Reserved

59-7.01A(3) Submittals

Submit stain manufacturer's product data and application instructions at least 7 days before starting staining activities.

59-7.01A(4) Quality Control and Assurance

Reserved

59-7.01B Materials

59-7.01B(1) General

Reserved

59-7.01B(2) Stain

Stain must:
1. Be a water-based solution of inorganic metallic salts
2. Contain dilute acid that penetrates and etches the concrete or shotcrete surface
3. Be a commercial quality product designed specifically for exterior applications
4. Produce abrasion-resistant color deposits

59-7.01B(3) Sealer

Reserved

59-7.01B(4) Joint Sealing Compound

Reserved

59-7.01C Construction

59-7.01C(1) General

Seal joints between concrete and shotcrete surfaces to be stained and adjacent metal with joint sealing compound before applying the stain.
Test surfaces for acceptance of the stain before applying the stain. Clean surfaces that resist accepting the stain and retest until passing.
Apply the stain under the manufacturer's instructions.
Before staining, the concrete or shotcrete surfaces must be:
1. At least 28 days old
2. Prepared under SSPC-SP 13/NACE no. 6
3. Thoroughly dry

Apply the stain uniformly to avoid excessive rundown. Work the stain into the concrete using a nylon bristle brush in a circular motion.

DocuSign Envelope ID: 894511EA-295B-49EB-A393-D26A6837FDD4

After the last coat of stain has dried, rinse stained surfaces with water and wet scrub with a stiff bristle nylon brush until the rinse water runs clear. Collect all rinse water.
Protect adjacent surfaces during staining.
Thoroughly cure each application of the stain and correct skips, holidays, thin areas, or other deficiencies before the next application.
Drips, puddles, or other irregularities must be worked into the concrete or shotcrete surface.

59-7.01C(2) Test Panel

For staining concrete or shotcrete, stain a test panel complying with section 51-1.01D(3).
For staining sculpted shotcrete, stain a test panel complying with section 53-3.01D(3).
The test panel must be:

1. Stained using the same personnel, materials, equipment and methods to be used in the work
2. Accessible for viewing
3. Displayed in an upright position near the work
4. Authorized for staining before starting the staining work

If ordered, construct additional test panels until a satisfactory color is attained.
The Engineer uses the authorized stained test panel to determine the acceptability of the stained surface.
Dispose of the test panels after the staining work is complete and authorized. Notify the Engineer before disposing of the test panels.

59-7.01D Payment

Not Used

59-7.02 SCULPTED SHOTCRETE AND TEXTURED CONCRETE

59-7.02A General

59-7.02A(1) Summary

Section 59-7.02 includes specifications for preparing and staining sculpted shotcrete and textured concrete surfaces using an acid stain.

59-7.02A(2) Definitions

Reserved

59-7.02A(3) Submittals

59-7.02A(3)(a) General

Reserved

59-7.02A(3)(b) Experience Qualifications

Submit the following documentation of the staining subcontractor's experience at least 10 days before the preconstruction meeting:

1. Summary of the staining subcontractor's experience that demonstrates compliance with section 59-7.02A(4)(b).
2. List of at least 3 projects completed in the last 5 years that demonstrate the staining subcontractor's ability to stain textured concrete or sculpted shotcrete surfaces similar to the textured concrete or sculpted shotcrete for this project. For each project include:
   - 2.1. Project description
   - 2.2. Name and phone number of the owner
   - 2.3. Staining completion date
   - 2.4. Color photos of the completed stained surface

59-7.02A(3)(c) Installation Plan

DocuSign Envelope ID: 894511EA-295B-49EB-A393-D26A6837FDD4

Submit an installation plan at least 10 days before the preconstruction meeting. The installation plan must include details for preparing and staining the textured concrete or sculpted shotcrete to achieve the required color, including:

1. Number of applications that will be used to apply the stain
2. For each application of the stain, a description of:
   2.1. Manufacturer, color, finish, and percentage strength mixture of the stain that will be applied
   2.2. Methods and tools that will be used to apply the stain
3. Methods for protecting adjacent surfaces during staining
4. Rinse water collection plan for containing all liquid, effluent, and residue resulting from preparing and staining textured concrete or sculpted shotcrete

59-7.02A(4) Quality Control and Assurance

59-7.02A(4)(a) General

Reserved

59-7.02A(4)(b) Contractor Qualifications

The staining subcontractor must:

1. Have experience in staining textured concrete or sculpted shotcrete surfaces to simulate the appearance of natural rock formations or stone masonry
2. Have successfully completed at least 3 projects in the past 5 years involving staining of concrete or sculpted shotcrete surfaces similar to the textured concrete or sculpted shotcrete for this project

59-7.02A(4)(c) Preconstruction Meeting

Before starting staining activities, conduct a meeting to discuss the installation plan. Meeting attendees must include the Engineer and all staining subcontractors.

59-7.02B Materials

Not Used

59-7.02C Construction

Not Used

59-7.02D Payment

Prepare and stain concrete and prepare and stain shotcrete are measured by the area of the vertical or sloped wall face stained.

Replace "solider" in the 5th paragraph of section 59-9.03 with:

04-19-13

soldier

Replace section 59-11 with:

07-19-13

59-11 STAINING GALVANIZED SURFACES

Reserved

DocuSign Envelope ID: 894511EA-295B-49EB-A393-D26A6837FDD4

Replace section 59-12 with:

07-19-13

59-12 ROCK STAINING

59-12.01 GENERAL

59-12.01A Summary

Section 59-12 includes specifications for applying stain to the exterior surface of landscape boulders, native rock that has been damaged or scarred, rock energy dissipaters, rock slope protection and gabion surfaces.

59-12.01B Submittals

Submit the following:

1. Work plan showing methods to control overspray and spillage, and to protect adjacent surfaces
2. Product data including the manufacturer's product sheet and the instructions for the application of the stain

59-12.01C Quality Control and Assurance

59-12.01C(1) General

Reserved

59-12.01C(2) Test Plot

Apply the stain to a test plot rock area of at least 3 by 3 feet at a location designated by the Engineer. Notify the Engineer at least 7 days before staining the test plot. Prepare and stain the test plot with the same materials, tools, equipment, and methods to be used in staining the final surfaces. Separate test plots are required for staining rock slope protection and native rock.

If ordered, prepare additional test plots. Additional test plots are change order work.

Obtain authorization of the test plot before starting the staining work. Use the authorized test plot as the standard for comparison in determining acceptability of staining. If the test plot is not incorporated into the work and the Engineer determines it is no longer needed, dispose of it.

59-12.02 MATERIALS

59-12.02A General

Reserved

59-12.02B Stain

Reserved

59-12.03 CONSTRUCTION

59-12.03A General

Reserved

59-12.03B Preparation

Before applying the stain:

1. Identify and obtain authorization for the areas to be stained
2. Remove oils, dirt, and other contaminants from the surfaces to be stained
3. Dry all surfaces to be stained

59-12.03C Application

After the areas to be stained have been identified, prepared, and the test plot authorized, stain the exposed surfaces under the manufacturer's instructions to achieve a color consistent with, or as close as possible to, the authorized test area color.

Control overspray and protect adjacent surfaces.

Keep stained surfaces dry for at least 20 days following the application of the stain.

DocuSign Envelope ID: 894511EA-295B-49EB-A393-D26A6837FDD4

59-12.04 PAYMENT

Rock stain areas are measured along the slope face.

^^^

DocuSign Envelope ID: 894511EA-295B-49EB-A393-D26A6837FDD4

Replace section 65-2.02D with:

07-19-13

65-2.02D Reserved

^^

68 SUBSURFACE DRAINS

04-18-14

Replace the 5th paragraph of section 68-4.02E with:

04-18-14

HMA for backfilling trenches must comply with HMA for miscellaneous areas as specified in section 39.

^^

70 MISCELLANEOUS DRAINAGE FACILITIES

07-19-13

Replace section 70-5.02A(2) with:

01-20-12

70-5.02A(2) Plastic Flared End Sections

Plastic flared end sections must comply with ASTM D 3350.

Replace "40-1.03N" in item 2.4 of the 1st paragraph of section 70-5.06C with:

07-19-13

40-1.03K

Replace the 2nd, 3rd, and 4th paragraphs of section 70-7.02B with:

01-18-13

Before shipping, the exterior surfaces of the casing must be cleaned, primed, and coated to comply with ANSI/AWWA C213 or ANSI/AWWA C214.

Wrapping tape for repairing damaged coating and wrapping field joints and fittings must be a pressure-sensitive PVC or polyethylene tape with a minimum thickness of 50 mils, 2 inches wide.

Add to section 70-7.03:

01-18-13

Repair damaged coating on the casing and wrap field joints and fittings with wrapping tape as follows:

1. Before wrapping, thoroughly clean and prime the pipe casing, joints, and fittings under the tape manufacturer's instructions.
2. Wrap the tape tightly with 1/2 uniform lap, free from wrinkles and voids to provide not less than a 100-mil thickness.
3. Wrapping at joints must extend at least 6 inches over adjacent pipe casing coverings. Apply tension such that the tape will conform closely to contours of the joint.

Add to section 70:

07-19-13

70-8–70-15 RESERVED

DocuSign Envelope ID: 894511EA-295B-49EB-A393-D26A6837FDD4

^^^

DocuSign Envelope ID: 894511EA-295B-49EB-A393-D26A6837FDD4

07-19-13

Delete the 2nd paragraph of section 72-11.01C(1).

07-19-13

Delete the 7th paragraph of section 72-11.01C(1).

Add between the 7th and 8th paragraphs of section 72-11.01C(1):

07-19-13

Schedule the construction of the slope paving such that the work, including placing and finishing concrete and applying curing compound, is completed on the same day that the work is started.

Replace the 8th paragraph of section 72-11.01C(1) with:

07-19-13

If the Engineer determines that the size of the slope paving is too large to be constructed without an intermediate construction joint, place a joint at an authorized location. Complete a section of concrete bounded by permissible construction joints within the same day.

Replace the 1st paragraph of section 72-11.01C(2) with:

01-18-13

Construct and finish minor concrete slope paving under section 51-1.

Replace the 3rd paragraph of section 72-11.01C(2) with:

07-19-13

After striking-off to grade, hand float the concrete with floats that are at least 4 inches wide and 30 inches long. Broom the entire surface with a stiff-bristled broom to produce a uniform surface. Brooming must be done when the surface is sufficiently set to prevent deep scarring and must be accomplished by drawing the broom down the slope, leaving marks parallel to the slope. The Engineer may order you to apply a fine spray of water to the surface immediately before brooming.

07-19-13

Delete the 3rd paragraph of section 72-11.01D.

^^

73 CONCRETE CURBS AND SIDEWALKS

07-19-13

Replace the paragraph in section 73-1.01A with:

07-19-13

Section 73-1 includes general specifications for constructing minor concrete items including concrete curbs, sidewalks, gutter depressions, driveways, island paving, and curb ramps; for installing detectable warning surfaces and precast parking bumpers; and for texturing and coloring concrete surfaces.

^^

DocuSign Envelope ID: 894511EA-295B-49EB-A393-D26A6837FDD4

74 PUMPING EQUIPMENT AND CONTROLS

04-19-13

Replace the 1st paragraph of section 74-1.01C(3) with:

04-19-13

Submit at least 5 copies of product data to OSD, Documents Unit. Each copy must be bound together and include an index stating equipment names, manufacturers, and model numbers. Two copies will be returned. Notify the Engineer of the submittal. Include in the notification the date and contents of the submittal.

Replace the 1st sentence of the 1st paragraph in section 74-2.01D(2) with:

01-20-12

Drainage pumps must be factory certified under ANSI/HI 14.6.

^^

75 MISCELLANEOUS METAL

07-19-13

Add between 2nd and 3rd paragraphs of section 75-1.03A:

07-19-13

Fabricate expansion joint armor from steel plates, angles, or other structural shapes. Shape the armor to the section of the concrete deck and match-mark it in the shop. Straighten warped sections of expansion joint armor before placing. Secure the expansion joint armor in the correct position during concrete placement.

Replace "SSPC-QP 3" in the 3rd paragraph of section 75-1.03E(4) with:

10-19-12

AISC-420-10/SSPC-QP3

Replace "metal beam guard railing" in the table in the 1st paragraph of section 75-1.05 with:

07-19-13

guardrail

^^

Replace section 78 with:

07-20-12

78 INCIDENTAL CONSTRUCTION

07-20-12

78-1 GENERAL

Section 78 includes specifications for incidental bid items that are not closely associated with other sections.

78-2–78-50 RESERVED

^^

DocuSign Envelope ID: 894511EA-295B-49EB-A393-D26A6837FDD4

80 FENCES

07-18-14

Add to section 80-2.02D:

10-19-12

Vertical stays must:
1. Comply with ASTM A641
2. Be 12-1/2 gage
3. Have a Class 3 zinc coating

Replace item 1 in the list in section 80-2.02E with:

10-19-12

Comply with ASTM A 116, Type Z, Grade 60, Class 1

Add after "galvanized wire" in the 1st paragraph of section 80-2.02F:

10-19-12

complying with ASTM A 641

Replace the 3rd and 4th paragraphs of section 80-2.02F with:

10-19-12

Each staple used to fasten barbed wire and wire mesh fabric to wood posts must:
1. Comply with ASTM F 1667
2. Be at least 1-3/4 inches long
3. Be manufactured from 9-gage galvanized wire

Wire ties used to fasten barbed wire and wire mesh to metal posts must be at least 11-gage galvanized wire complying with ASTM F 626. Clips and hog rings used for metal posts must be at least 9-gage galvanized wire complying with ASTM F 626.

Replace the 8th through 14th paragraphs of section 80-2.03 with:

10-19-12

Attach the wire mesh and barbed wire to each post.
Securely fasten tension wires to wood posts. Make a single or double loop around each post at each attachment point and staple the wire to the post. Use wire ties, hog rings, or wire clips to fasten the wires to the metal posts.
Connect each wood brace to its adjacent post with a 3/8 by 4-inch steel dowel. Twist the tension wires until the installation is rigid.
Stretch barbed wire and wire mesh fabric and fasten to each wood or steel end, corner, or gate post. Apply tension according to the manufacturer's instructions using a mechanical stretcher or other device designed for such use. If no tension is specified by the manufacturer, use 250 pounds for the required tension. Evenly distribute the pull over the longitudinal wires in the wire mesh such that no more than 50 percent of the original depth of the tension curves is removed. Do not use a motorized vehicle, truck, or tractor to stretch the wire.
Attach barbed wire and wire mesh fabric to the private-property side of posts. On curved alignments, place the wire mesh and barbed wire on the face of the post against which the normal pull of the wire mesh and wire will be exerted. Terminate the wire mesh and barbed wire at each end, corner, pull, and gate post in the new fence line. Attach wire mesh and barbed wire to each wood or steel end, corner, pull, or gate post by wrapping each horizontal strand around the post and tying it back on itself with at least 4 tightly-wound wraps.

DocuSign Envelope ID: 894511EA-295B-49EB-A393-D26A6837FDD4

At line posts, fasten the wire mesh to the post at the top and bottom and at intermediate points not exceeding 10 inches apart. Fasten each line of barbed wire to each line post. Use wire ties or clips to fasten the wires to metal posts under the post manufacturer's instructions. Drive staples crosswise with the grain of the wood and pointed slightly downward. Drive staples just short of actual contact with the wires to allow free longitudinal movement of those wires and to prevent damage to the wire's protective coating. Secure all wires to posts to maintain horizontal alignment. Splices in barbed wire and wire mesh are allowed provided there are no more than 2 splices per 50 feet of fence. Use commercially-available galvanized mechanical wire splices or a wire splice created by tying off wire. Install mechanical wire splices with a tool designed for that purpose under the manufacturer's instructions. Tie off the wire as follows:

1. Carry the ends of each wire 3 inches past the tied-off knot location and wrap around the wire for at least 6 turns in opposite directions.
2. Remove the splice tool and close the space by pulling the end of the wires together.
3. Cut the unused ends of the wire close and neat.

07-18-14

Delete "resisting moment" and its definition in section 80-3.01B.

Add to section 80-3.01B:

07-18-14

posts and braces: Framework that supports the metal fabric for chain link fence. Posts and braces include round and roll-formed cross sections used as line, end, latch, or corner posts and braces.

Add to section 80-3.01C:

07-18-14

Submit a certificate of compliance for posts and braces that includes the information specified in ASTM F1043, section 9.

07-18-14

Delete section 80-3.01D.

Replace the 1st paragraph of section 80-3.02B with:

07-18-14

The base metal for posts and braces must be commercial-quality, weldable steel complying with AASHTO M 181, Type 1, except for the protective coating requirements.
Posts and braces must comply with the strength requirements in ASTM F1043:

1. Group IA, regular grade, for round posts
2. Group II-L for roll-formed posts and braces

07-18-14

Delete the 4th through 8th paragraphs of section 80-3.02B.

Add between "coating" and "unless" in the 1st sentence of section 80-3.02C:

07-18-14

or ASTM F1345, Class 2,

DocuSign Envelope ID: 894511EA-295B-49EB-A393-D26A6837FDD4

^^^

DocuSign Envelope ID: 894511EA-295B-49EB-A393-D26A6837FDD4

Replace "80-2.02" in the 2nd paragraph of section 83-1.02E with:

10-19-12

80-3.02B

Replace the 3rd paragraph of section 83-1.02G(2) with:

07-18-14

Stud bolts must comply with the specifications for studs in clause 7 of AWS D1.1.

Replace "horizontal" in the 8th paragraph of section 83-1.02G(2) with:

07-18-14

vertical

Replace "sets" in the 10th paragraph of section 83-1.02G(2) with:

07-19-13

copies

Replace the 1st sentence of the 1st paragraph of section 83-1.03 with:

11-15-13

Except for guardrail within the pay limits of a terminal system, a transition railing (Type WB-31), an end anchor assembly, or a rail tensioning assembly, midwest guardrail system is measured along the face of the rail element from end post to end post of the completed railing.

Add to section 83-2.02D(1):

10-21-11

For a concrete barrier transition:
1. Remove portions of the existing concrete barrier where shown under section 15-3
2. Roughen the contact surface of the existing concrete barrier
3. Drill and bond dowels into the existing concrete barrier under section 51-1

Add to section 83-2.02:

10-19-12

83-2.02H–83-2.02M Reserved

^^

84 TRAFFIC STRIPES AND PAVEMENT MARKINGS

05-30-14

Replace section 84-1.01C with:

05-30-14

84-1.01C Submittals

For glass beads used in drop-on applications and in thermoplastic formulations, submit a certificate of compliance and test results for each lot of beads specifying the EPA test methods used and tracing the lot to the specific test sample. The testing for lead and arsenic content must be performed by an independent testing laboratory.
Submit retroreflectivity readings for traffic stripes and pavement markings at locations with deficient retroreflectivity determined by the Engineer.

DocuSign Envelope ID: 894511EA-295B-49EB-A393-D26A6837FDD4

84-1.01D Quality Control and Assurance

Test each lot of glass beads for arsenic and lead under EPA Test Method 3052 and 6010B or 6010C.

Applied traffic stripes and pavement markings must be retroreflective. Within 30 days of applying traffic stripes and pavement markings, the retroreflectivity of the stripes and markings must be a minimum of 250 $mcd \cdot m^{-2} \cdot lx^{-1}$ for white and 125 $mcd \cdot m^{-2} \cdot lx^{-1}$ for yellow when measured under ASTM E1710.

The Engineer will perform a nighttime, drive-through, visual inspection of the retroreflectivity of the traffic stripes and pavement markings and notify you of any locations with deficient retroreflectivity. Measure the retroreflectivity of the deficient areas using a retroreflectometer under ASTM E1710 and the sampling protocol specified in ASTM D7585.

Replace the paragraph in section 84-1.02 with:

05-30-14

Glass beads applied to paint must comply with State Specification 8010-004.

Glass beads applied to molten thermoplastic material must be Type 2 beads complying with AASHTO M 247. The glass beads must have a coating that promotes adhesion of the beads to thermoplastic.

At least 75 percent of the beads by count must be true spheres that are colorless and do not exhibit dark spots, air inclusions, or surface scratches when viewed under 20X magnification.

Each lot of glass beads used in pavement markings must contain less than 200 ppm each of arsenic and lead when tested under EPA Test Method 3052 and 6010B or 6010C.

Replace the 1st paragraph in section 84-2.04 with:

01-20-12

A double extruded thermoplastic traffic stripe consisting of two 4-inch wide yellow stripes is measured as 2 traffic stripes.

A double sprayable thermoplastic traffic stripe consisting of two 4-inch wide yellow stripes is measured as 1 traffic stripe.

Add to section 84:

01-20-12

84-6 THERMOPLASTIC TRAFFIC STRIPES AND PAVEMENT MARKINGS WITH ENHANCED WET NIGHT VISIBILITY

Reserved

84-7–84-10 RESERVED

^^

86 ELECTRICAL SYSTEMS

10-17-14

Replace the paragraphs in section 86-1.01 with:

07-19-13

Section 86 includes general specifications for constructing and rehabilitating electrical systems.

Electrical systems must comply with the material and installation specifications in section 86-2.

Section 86-3 includes specifications for constructing controller assemblies.

DocuSign Envelope ID: 894511EA-295B-49EB-A393-D26A6837FDD4

Section 86-4 includes specifications for constructing traffic signal faces, programmed visibility signal faces, pedestrian signal faces, flashing beacons, ramp metering signs, and signal mounting assemblies.
Section 86-5 includes specifications for constructing vehicle detectors and pedestrian push button assemblies.
Section 86-6 includes specifications for constructing lighting systems.
Section 86-7 includes specifications for constructing rehabilitating electrical equipment.
Comply with Part 4 of the *California MUTCD*. Nothing in section 86 is to be construed as to reduce the minimum standards in this manual.
The locations shown for electrical systems are approximate; the Engineer determines the final locations.

Replace the paragraphs in section 86-1.015 with:

07-19-13

actuation: Actuation as defined in the *California MUTCD*.

channel: Discrete information path.

controller assembly: Assembly for controlling a system's operations, consisting of a controller unit and auxiliary equipment housed in a rainproof cabinet.

controller unit: Part of the controller assembly performing the basic timing and logic functions.

detector: Detector as defined in the *California MUTCD*.

electrolier: Assembly of a lighting standard and luminaire.

flasher: Device for opening and closing signal circuits at a repetitive rate.

flashing beacon control assembly: Assembly of switches, circuit breakers, terminal blocks, flasher, wiring, and other necessary electrical components housed in a single enclosure for operating a beacon.

inductive loop detector: Detector capable of being actuated by an inductance change caused by a vehicle passing or standing over the loop.

lighting standard: Pole and mast arm supporting the luminaire.

luminaire: Assembly that houses the light source and controls the light emitted from the light source.

magnetic detector: Detector capable of being actuated by an induced voltage caused by a vehicle passing through the earth's magnetic field.

powder coating: Coating applied electrostatically using exterior-grade UV-stable polymer powder.

pretimed controller assembly: Assembly operating traffic signals under a predetermined cycle length.

pull box: A box with a cover that is installed in an accessible place in a run of conduit to facilitate the pulling in of wires or cables.

signal face: Signal face as defined in the *California MUTCD*.

DocuSign Envelope ID: 894511EA-295B-49EB-A393-D26A6837FDD4

signal head: Signal head as defined in the *California MUTCD*.

signal indication: Signal indication as defined in the *California MUTCD*.

signal section: Signal section as defined in the *California MUTCD*.

signal standard: Pole and mast arm supporting 1 or more signal faces with or without a luminaire mast arm.

traffic-actuated controller assembly: Assembly for operating traffic signals under the varying demands of traffic as registered by detector actuation.

traffic phase: Signal phase as defined in the *California MUTCD*.

vehicle: Vehicle as defined in the *California Vehicle Code*.

Replace the paragraphs in section 86-1.02 with:

07-19-13

Comply with 8 CA Code of Regs § 2299 et seq.
Electrical equipment must comply with one or more of the following standards:
1. ANSI
2. ASTM
3. EIA
4. NEMA
5. NETA
6. UL
7. Public Utilities Commission, General Order No. 95, "Rules for Overhead Electrical Sign Construction"
8. Public Utilities Commission, General Order No. 128, "Rules for Construction of Underground Electric Supply and Communication Systems"

Materials and workmanship must comply with:
1. FCC rules
2. ITE standards
3. NEC
4. California Electrical Code

Electrical equipment and materials must be NRTL certified wherever applicable.

Replace the paragraphs in section 86-1.03 with:

07-19-13

Submit a schedule of values within 15 days after Contract approval.
Determine the quantities required to complete the work. Submit the quantities as part of the schedule of values.
Provide a schedule of values for each lump sum bid item.
Do not include costs for the traffic control system in the schedule of values.
The schedule of values must include the type, size, and installation method for:
1. Foundations
2. Standards and poles
3. Conduit

DocuSign Envelope ID: 894511EA-295B-49EB-A393-D26A6837FDD4

4. Pull boxes
5. Conductors and cables
6. Service equipment enclosures
7. Telephone demarcation cabinets
8. Vehicle signal heads and hardware
9. Pedestrian signal heads and hardware
10. Push buttons
11. Loop detectors
12. Luminaires and lighting fixtures
13. Materials shown in the quantity tables on plan sheets labeled *E*

Replace the paragraphs in section 86-1.04 with:

07-19-13

Within 15 days of Contract approval, submit a list of equipment and materials that you propose to install. Submit the list before shipping equipment or materials to the job site. The list must include the following information:

1. Manufacturer's name
2. Make and model number
3. Month and year of manufacture
4. Lot and serial numbers
5. Dimensions
6. List of components
7. Manufacturer's installation instructions
8. Contract number
9. Your contact information

Supplement the list with 2 copies of the following data:

1. Schematic wiring diagrams
2. Scale drawings of cabinets showing location and spacing of shelves, terminal blocks, and equipment, including dimensions
3. Operation manual

Electrical equipment constructed as shown does not require detailed drawings and diagrams.
Submit 3 sets of computer-generated schematic wiring diagrams for the cabinet.
Place the schematic wiring diagram in a heavy-duty plastic envelope and attach it to the inside of the cabinet door.
Prepare diagrams, plans, and drawings using graphic symbols in IEEE 315, "Graphic Symbols for Electrical and Electronic Diagrams."

Replace the 5th paragraph of section 86-2.04B(2) with:

07-19-13

HS bolts, nuts, and flat washers used to connect slip base plates must comply with the requirements for HS fastener assemblies for use in structural steel joints in section 55-1.02A(1) except rotational capacity testing and tension testing are not required.

DocuSign Envelope ID: 894511EA-295B-49EB-A393-D26A6837FDD4

07-19-13

Delete the row for standard Type 36-20A in the table in the 6th paragraph of section 86-2.04B(2).

Replace the 10th paragraph of section 86-2.04B(2) with:

07-19-13

Bolted connections attaching signal or luminaire arm to the pole must be considered slip critical. Galvanized faying surfaces of plates on luminaire arm, signal arm, and pole must be roughened by hand using a wire brush before assembly and must comply with requirements for Class C surface conditions for slip-critical connections in *Specification for Structural Joints Using High-Strength Bolts* of the RCSC. Coatings for faying surfaces must comply with the RCSC specification for Class B coatings.

Replace the 1st sentence of item 8 in the list in the 1st paragraph of section 86-2.04B(3) with:

07-19-13

During manufacturing, longitudinal seams on vertical tubular members of cantilevered support structures must be within 90 degrees circumferentially of the center of the longest mast arm connection.

07-19-13

Delete item 15.3 in the list in the 1st paragraph of section 86-2.04B(3).

Add between "Exposed" and "conduit" in the 2nd paragraph of section 86-2.05B:

07-19-13

Type 1

Replace the 1st sentence of the 10th paragraph of section 86-2.05C with:

07-19-13

After installing conduit, install the pull tape.

Replace the 1st sentence of the 15th paragraph of section 86-2.05C with:

11-15-13

Conduit runs shown to be located behind curbs may be installed in the street within 3 feet of and parallel to the face of the curb by the trenching in pavement method.

Replace the 1st and 2nd sentences of the 2nd paragraph of section 86-2.05D with:

07-19-13

Install an expansion-deflection fitting for expansion joints with a 1-1/2-inch movement rating. The fitting must be watertight and include a molded neoprene sleeve, a bonding jumper, and 2 silicon bronze or zinc-plated iron hubs.

Replace section 86-2.06 with:

07-19-13

86-2.06 PULL BOXES

86-2.06A General

86-2.06A(1) Cover Marking

The cover marking must be clearly defined, uniform in depth, and parallel to either the long or short sides of the cover.

DocuSign Envelope ID: 894511EA-295B-49EB-A393-D26A6837FDD4

Marking letters must be 1 to 3 inches high.
Before galvanizing steel or cast iron cover, apply marking by one of the following methods:

1. Use cast iron strip at least 1/4 inch thick with letters raised a minimum of 1/16 inch. Fasten strip to cover with 1/4-inch flathead stainless steel machine bolts and nuts. Peen bolts after tightening.
2. Use sheet steel strip at least 0.027 inch thick with letters raised a minimum of 1/16 inch. Fasten strip to cover by spot welding, tack welding, or brazing, with 1/4-inch stainless steel rivets or 1/4-inch roundhead stainless steel machine bolts and nuts. Peen bolts after tightening.
3. Bead weld the letters on cover such that the letters are raised a minimum of 3/32 inch.

86-2.06A(2) Installation and Use

Space pull boxes no more than 200 feet apart. You may install additional pull boxes to facilitate the work.
You may use a larger standard size pull box than that shown on the plans or specified.
A pull box in ground or sidewalk area must be installed as follows:

1. Embed bottom of the pull box in crushed rock.
2. Place a layer of roofing paper on the crushed rock.
3. Place grout over the layer of roofing paper. Grout must be 0.50 to 1 inch thick and sloped toward the drain hole.
4. Make a 1-inch drain hole in the center of the pull box through the grout and roofing paper.
5. Place grout between the pull box and the pull box extension, and around conduits.

The top of the pull box must be flush with the surrounding grade or the top of an adjacent curb, except in unpaved areas where the pull box is not immediately adjacent to and protected by a concrete foundation, pole, or other protective construction. Place the pull box 1-1/4 inches above the surrounding grade. Where practical, place a pull box shown in the vicinity of curbs or adjacent to a standard on the side of the foundation facing away from traffic. If a pull box is installed in a sidewalk area, adjust the depth of the pull box so that the top of the pull box is flush with the sidewalk.
Reconstruct the sump of an existing pull box if disturbed by your activities. Remove old grout and replace with new if the sump was grouted.

86-2.06B Non–Traffic Pull Boxes

Reserved

86-2.06C Traffic Pull Boxes

The traffic pull box and cover must comply with ASTM C857, "Standard Practice for Minimum Structural Design Loading for Underground Precast Concrete Utility Structures," for HS20 loading. You must be able to place the load anywhere on the box and cover for 1 minute without causing cracks or permanent deformations.
Frame must be anchored to the box with 1/4 by 2-1/4 inch concrete anchors. Four concrete anchors must be included for No. 3-1/2(T) pull box; one placed in each corner. Six concrete anchors must be included for No. 5(T) and No. 6(T) pull boxes; one placed in each corner and one near the middle of each of the longer sides.
Nuts must be zinc-plated carbon steel, vibration resistant, and have a wedge ramp at the root of the thread.

DocuSign Envelope ID: 894511EA-295B-49EB-A393-D26A6837FDD4

After installation of traffic pull box, install the steel cover and keep it bolted down when your activities are not in progress at the pull box. When the steel cover is placed for the final time, the cover and Z bar frame must be cleaned of debris and tightened securely.
Steel cover must be countersunk approximately 1/4 inch to accommodate the bolt head. When tightened, the bolt head must not exceed more than 1/8 inch above the top of the cover.
Concrete placed around and under traffic pull boxes must be minor concrete.

Replace the 11th row in the table in the 1st paragraph of section 86-2.08B with:

07-19-13

Grounded circuit conductor	Pedestrian push buttons	Wht	Blk	NBR	14
	Signals and multiple lighting	Wht	None	NBR	10
	Flashing beacons and sign lighting	Wht	None	NBR	12
	Lighting control	Wht	None	C-3	14
	Service	Wht	None	NBR	14

Replace the 1st sentence of the 1st paragraph of section 86-2.08C with:

07-19-13

Circuit conductors, connectors, and terminals must be UL or NRTL listed and rated for 600 V(ac) operation.

Add to the beginning of section 86-2.09A:

07-19-13

Provide enough traffic signal light conductors for functional operation of the signal. Provide 3 spare conductors in all conduits containing traffic signal light conductors.

Replace the paragraphs in section 86-2.09C with:

07-19-13

Connectors must be crimp type. Use a manufacturer-recommended tool for connectors and terminals to join conductors. Comply with SAE-AS7928.
Terminate stranded conductors smaller than no. 14 in crimp style terminal lugs.
Terminate field conductors no. 12 and smaller with spade type terminals. Terminate field conductors no. 10 and larger with spade type or ring type terminals.

Replace the value for resistivity in the table in the 6th paragraph of section 86-2.09E with:

07-19-13

25×10^{13} Ω per inch, minimum

Add between "the" and "head" in the 3rd sentence of the 2nd paragraph of 86-2.09F:

07-19-13

connector

Replace "project" in the 3rd paragraph of section 86-2.11A with:

10-19-12

work

DocuSign Envelope ID: 894511EA-295B-49EB-A393-D26A6837FDD4

Replace "Contract" in item 2 in the list in the 11th paragraph of section 86-2.11A with:

10-19-12

work

07-19-13

Delete the 12th paragraph of section 86-2.11A.

Replace section 86-2.11C with:

07-19-13

86-2.11C Electrical Service for Booster Pumps

Provide electrical service from the service point to the booster pump.
Furnish conductors, conduit, and pull boxes from the service point to the booster pump.
Do not use Type 3 conduit unless shown otherwise.

Replace section 86-2.14A with:

07-19-13

86-2.14A General

Deliver material and equipment for acceptance testing to either METS or a testing location as ordered.
Allow 30 days for testing. The Department notifies you when testing is complete. You must pick up the material or equipment from the test site and deliver it to the job site.
If material or equipment is rejected, allow 30 days for retesting. The retesting period starts when replacement material or equipment is delivered to the test site.
If material or equipment submitted for testing does not comply with the specifications, remove it within 5 business days after you are notified that the equipment is rejected. If equipment is not removed within that period, the Department may ship it to you and deduct the shipping cost.
Testing and quality control procedures for traffic signal controller assemblies must comply with NEMA TS standards for traffic control systems.

Replace the 2nd paragraph of section 86-3.02A(1) with:

07-19-13

The Department furnishes the BBS components under section 6-2.03.

Replace the 9th paragraph of section 86-3.02B with:

07-19-13

The couplings between the external cabinet and Model 332L cabinet must include a conduit for power connections between the 2 cabinets. Couplings must include:

1. 2-inch nylon-insulated steel chase nipple
2. 2-inch sealing steel locknut
3. 2-inch nylon-insulated steel bushing

07-19-13

Delete item 1.3 in the list in the 7th paragraph of section 86-3.04A.

Replace the 2nd paragraph of section 86-4.01A with:

07-19-13

The housing must not fail structurally as described in the following table:

DocuSign Envelope ID: 894511EA-295B-49EB-A393-D26A6837FDD4

Housing Structural Failure

Housing type	Test method	Description of structural failure
Metal	California Test 666	Fracture within the housing assembly or deflection of more than half the lens diameter of the signal section during the wind load test
Plastic	California Test 605	Fracture within the housing assembly or deflection of more than 10 degrees in either the vertical or horizontal plane after the wind load has been removed from the front of the signal face or deflection of more than 6 degrees in either the vertical or horizontal plane after the wind load has been removed from the back of the signal face

Replace the 1st sentence of section 86-4.01A(1) with:

07-19-13

Each metal housing must have a metal visor.

Replace the 1st sentence of section 86-4.01A(2) with:

07-19-13

Each plastic housing must be molded in 1 piece or fabricated from 2 or more pieces and joined into a single piece.

07-19-13

Delete item 1 in the list in section 86-4.01D(1)(b).

Replace the paragraphs in section 86-4.01D(1)(c)(i) with:

07-19-13

LED signal modules must be on the Authorized Material List for LED traffic signals.
The Department tests modules under section 86-2.14A, ANSI/ASQ Z1.4, and:

1. California Test 604 for LED and circular LED signal modules
2. California Test 3001 for arrow, U-turn, and bicycle LED signal modules

The LED signal modules submitted for testing must be typical production units. LEDs must be spread evenly across the module.
The Department may test the modules on all parameters specified in section 86-4.01D.

Replace the 1st and 2nd sentences of the 3rd paragraph of 86-4.01D(2)(b) with:

07-19-13

The electrical connection for each flashing LED signal module must be 4 secured, color-coded, jacketed copper wires. The wire must comply with the NEC.

Replace the heading of section 86-4.02 with:

07-19-13

PROGRAMMED VISIBILITY VEHICLE SIGNAL SECTION

Replace "face" in the 1st paragraph of section 86-4.02 with:

07-19-13

section

DocuSign Envelope ID: 894511EA-295B-49EB-A393-D26A6837FDD4

Add before the 1st sentence in section 86-4.03A:

07-19-13

The pedestrian signal face must be Type A.

Replace the 1st sentence of the 2nd paragraph of section 86-4.03B with:

07-19-13

The Department tests the pedestrian signal's front screen in a horizontal position with its edges supported.

07-19-13

Delete items 1 and 4 in the list in section 86-4.03I(1)(b).

Replace the paragraphs of section 86-4.03I(1)(c)(i) with:

07-19-13

The LED PSF module must be on the Authorized Material List for LED traffic signals.
The Department tests LED PSF modules under section 86-2.14A, ANSI/ASQ Z1.4, and California Test 606.
The LED PSF modules submitted for testing must be representative of typical production units.
The Department may test the modules on all parameters specified in section 86-4.03I.

Replace item 1 in the list in the 1st paragraph of section 86-4.03I(2) with:

07-19-13

1. Not include reflectors.

Replace item 6 in the list in the 1st paragraph of section 86-4.03I(2) with:

07-19-13

6. Be able to replace signal lamp optical units and pedestrian signal faces with LEDs.

Replace the table titled "Chromaticity Standards (CIE Chart)" in the 16th paragraph of section 86-4.03I(2) with:

07-19-13

Chromaticity Standards (CIE Chart)

Upraised hand	X: not greater than 0.659 or less than 0.600 Y: not greater than 0.390 or less than 0.331 Y= 0.990-X
Walking person	X: not greater than 0.440 or less than 0.280 Y: not greater than 0.0483 + 0.7917(X) or less than 0.0983 + 0.7917(X)

Replace the paragraphs in section 86-4.03J with:

10-17-14

Reserved

Add between "beacon" and "must" in the 1st sentence of section 86-4.05:

07-19-13

signal face

DocuSign Envelope ID: 894511EA-295B-49EB-A393-D26A6837FDD4

07-19-13

Delete "face" in item 1 in the list in the 1st paragraph of section 86-4.05.

Replace the row for viscosity in the table in the 2nd paragraph of section 86-5.01A(3)(c) with:

07-19-13

Viscosity, Brookfield Thermosel, no. 27 Spindle, 20 rpm, 190 °C	D 4402	2.5–3.5 Pa·s

Replace the paragraph in section 86-5.01A(3)(d) with:

07-19-13

Use epoxy sealant for repair work in and around sawcuts housing inductive loops.

Replace "all loop conductors" in the 3rd paragraph of section 86-5.01A(4) with:

07-19-13

the detector lead-in cable

Replace "Encase the loop wires" in the 1st sentence of the 3rd paragraph of section 86-5.01A(5) with:

07-19-13

The loop wires must be encased

Replace section 86-5.02 with:

07-19-13

86-5.02 PUSH BUTTON ASSEMBLIES

The housing for a push button assembly must be die-cast or permanent mold-cast aluminum. The assembly must be rainproof and shockproof in any weather condition.
The push button's switch must be a single-pole, double-throw switching unit with screw-type terminals rated 15 A at 125 V(ac). The switch must have:

1. Plunger actuator and a U frame to allow recessed mounting in the push button housing
2. Operating force of 3.5 lb
3. Maximum pretravel of 5/64 inch
4. Minimum overtravel of 1/32 inch
5. Differential travel from 0.002 to 0.04 inch
6. 2-inch minimum diameter actuator

Where a push button is attached to a pole, the housing must be shaped to fit the pole's curvature. Use saddles if needed to make a neat and secure fit.
Where a push button is mounted on top of a 2-1/2-inch-diameter post, fit the housing with a slip fitter and use screws to rigidly secure it to the post.
Install the push button and the sign on the crosswalk side of the pole.
Attach the sign on a Type B push button assembly.
For a Type C push button assembly, mount the instruction sign on the same standard as the assembly using 2 straps and saddle brackets.

DocuSign Envelope ID: 894511EA-295B-49EB-A393-D26A6837FDD4

Add to section 86-5:

07-19-13

86-5.03 ACCESSIBLE PEDESTRIAN SIGNAL

Reserved

Replace "lthe amp" in item 2 in the list in the 1st paragraph of section 86-6.01A(2) with:

07-19-13

the lamp

^^^

DocuSign Envelope ID: 894511EA-295B-49EB-A393-D26A6837FDD4

Replace the table in the 1st paragraph of section 88-1.02G with:

01-20-12

Sediment Filter Bag

Property	Test	Values	
		Woven	Nonwoven
Grab breaking load, lb, 1-inch grip min, in each direction	ASTM D 4632	200	250
Apparent elongation, percent min, in each direction	ASTM D 4632	10	50
Water flow rate, gal per minute/sq ft min and max average roll value	ASTM D 4491	100-200	75-200
Permittivity, sec^{-1} min	ASTM D 4491	1.0	1.0
Apparent opening size, inches max average roll value	ASTM D 4751	0.023	0.012
Ultraviolet resistance, % min retained grab breaking load, 500 hr.	ASTM D 4355	70	70

Replace the table in the 1st paragraph of section 88-1.02H with:

01-20-12

Temporary Cover

Property	Test	Values	
		Woven	Nonwoven
Grab breaking load, lb, 1-inch grip min, in each direction	ASTM D 4632	200	200
Apparent elongation, percent min, in each direction	ASTM D 4632	15	50
Water flow rate, gal per minute/sq ft min and max average roll value	ASTM D 4491	4-10	80-120
Permittivity, sec^{-1} min	ASTM D 4491	0.05	1.0
Apparent opening size, inches max average roll value	ASTM D 4751	0.023	0.012
Ultraviolet resistance, % min retained grab breaking load, 500 hr.	ASTM D 4355	70	70

Replace section 88-1.02P with:

01-18-13

88-1.02P Biaxial Geogrid

Geosynthetics used for biaxial geogrid must be a punched and drawn polypropylene material formed into an integrally formed biaxial grid. When tested under the referenced test methods, properties of biaxial geogrid must have the values shown in the following table:

DocuSign Envelope ID: 894511EA-295B-49EB-A393-D26A6837FDD4

Biaxial Geogrid

Property	Test	Value
Aperture size, inch[a] min and max	Calipered	0.8-1.3 x 1.0-1.6
Rib thickness, inch min	Calipered	0.04
Junction thickness, inch min	Calipered	0.150
Tensile strength, 2% strain, lb/ft[a] min	ASTM D 6637	410 x 620
Tensile strength at ultimate, lb/ft[a] min	ASTM D 6637	1,310 x 1,970
Ultraviolet resistance, percent min retained tensile strength, 500 hours	ASTM D 4355	100
Junction strength, lb/ft[a] min	ASTM D 7737	1,220 x 1,830
Overall flexural rigidity, mg-cm min	ASTM D 7748	750,000
Torsional rigidity at 20 cm-kg, mm-kg/deg[b] min	GRI:GG9	0.65

[a]Machine direction x cross direction
[b]Geosynthetic Research Institute, Test Method GG9, *Torsional Behavior of Bidirectional Geogrids When Subjected to In-Plane Rotation*

Replace section 88-1.02Q with:

07-19-13

88-1.02Q Geosynthetic Bond Breaker

Geosynthetic bond breaker must be nonwoven; needle punched; not heat treated; polypropylene, polyethylene material.

When tested under the referenced test methods, properties of geosynthetic bond breaker material must have the values shown in the following table:

Geosynthetic Bond Breaker

Property	Test	Value
Mass per unit area, oz/sq yd min	ASTM D 5261	14.7
Thickness at 29 psi, mm min	ASTM D 5199	1.0
Tensile strength at ultimate, lbs/ft min	ASTM D 4595	685
Elongation, percent max	ASTM D 4595	130
Permittivity at 2.9 psi, m/s min	ASTM D 5493	0.0001
Hydraulic transmissivity at 29 psi, m/s min	ASTM D 6574	0.0002
Ultraviolet resistance, percent min retained grab breaking load, 500 hours	ASTM D 4355	60

^^

DocuSign Envelope ID: 894511EA-295B-49EB-A393-D26A6837FDD4

90 CONCRETE

07-19-13

Replace the 3rd paragraph of section 90-1.01C(7) with:

08-05-11

Submit weighmaster certificates in printed form or, if authorized, in electronic media. Present electronic media in a tab-delimited format on a CD or DVD. Captured data for the ingredients represented by each batch must be line feed carriage return and one line separate record with sufficient fields for the specified data.

Replace the 3rd paragraph of section 90-3.01C(5) with:

08-05-11

Production data must be input by hand into a pre-printed form or captured and printed by the proportioning device. Present electronic media containing recorded production data in a tab-delimited format on a CD or DVD. Each capture of production data must be followed by a line feed carriage return with sufficient fields for the specified data.

Replace the 1st paragraph of section 90-4.01A with:

07-19-13

Section 90-4 includes specifications for fabricating PC concrete members.

Replace the paragraphs in section 90-4.01C with:

07-19-13

90-4.01C(1) General

For reports and logs, type or clearly print the name next to the signature of the person signing the report or log.

Submit expansion test data under section 90-4.02, if required.

90-4.01C(2) Certificates of Compliance

Submit a certificate of compliance for the cementitious material used in PC concrete members. The certificate must be signed by the PC concrete product manufacturer.

Submit a certificate of compliance for each PC concrete member. The certificate of compliance for tier 1 and tier 2 members must be signed by the QC manager. The certificate of compliance for tier 3 members must be signed by the QC Inspector.

90-4.01C(3) Precast Concrete Quality Control Plan

Before performing any precasting activities for tier 1 and tier 2 PC concrete members, submit 3 copies of the project-specific QC plan for the PC plant. The QC plan must supplement the information from the authorized facility audit. Submit a separate QC plan for each plant. Allow 25 days for review.

Each project-specific QC plan must include:

1. Name of the precasting plant, concrete plants, and any testing laboratory to be used.
2. Manual prepared by the precasting plant that includes:
   - 2.1. Equipment description
   - 2.2. Testing procedures
   - 2.3. Safety plan
   - 2.4. Personnel names, qualifications, and copies of certifications
3. QC manager and QC inspector names, qualifications, and copies of certifications.
4. Organizational chart showing QC personnel and their assigned QC responsibilities.
5. Methods and frequencies for performing QC procedures including inspections, material testing, and any survey performed for all components of PC concrete members. Components include prestressing, concrete, grout, reinforcement, steel, miscellaneous metal, and formwork.

DocuSign Envelope ID: 894511EA-295B-49EB-A393-D26A6837FDD4

6. System for reporting noncompliant PC concrete members to the Engineer.
7. System for identification and tracking repairs and repair methods.
8. Procedure for the reinspection of repaired PC concrete members.
9. Forms for certificates of compliance, daily production logs, and daily reports.

Submit a revised QC plan for any changes to:
1. Concrete plants
2. Material sources
3. Material testing procedures
4. Testing laboratory
5. Procedures and equipment
6. Updated systems for tracking and identifying PC concrete members
7. QC personnel

After authorization, submit 7 copies of each authorized QC plan and make 1 copy available at each location where work is performed.
Allow 7 days for review of a revised QC plan.

90-4.01C(4) Daily Production Log

The QC inspector must provide reports to the QC manager for each day that precasting activities are performed.
The QC manager must maintain a daily production log of PC activities for each day's precasting. PC activities include setting forms, placing reinforcement, setting prestressing steel, casting, curing, post tensioning, and form release. This daily log must be available at the precasting plant. The daily log must include:
1. Plant location
2. Specific description of casting or related activities
3. Any problems or deficiencies discovered
4. Any testing or repair work performed
5. Names of QC inspectors and the specific QC inspections they performed that day
6. Reports for that day's precasting activities from each QC inspector including before, during, and after precast inspections

Immediately notify the Engineer when any precasting problems or deficiencies are discovered, and submit the proposed repair or process changes necessary to correct them.

90-4.01C(5) Precast Concrete Report

Before shipping PC concrete members, submit a PC concrete report. The report must include:
1. Reports of all material tests and any survey checks
2. Documentation that:
   - 2.1. You have evaluated all tests
   - 2.2. You corrected all rejected deficiencies
   - 2.3. Repairs have been reexamined with the required tests and found acceptable
3. Daily production logs
4. Certificates of compliance
5. Documentation of inspections

Each person who performs a material test or survey check must sign the corresponding report and submit the report directly to the QC manager.

Replace the paragraphs in section 90-4.01D with:

07-19-13

90-4.01D(1) General

Quality control and assurance for PC concrete includes:

DocuSign Envelope ID: 894511EA-295B-49EB-A393-D26A6837FDD4

1. Your QC program
2. Department's acceptance of PC concrete members

PC concrete members are categorized into the following 4 tiers:

1. Tier 1 consists of:
   1.1. Components of bridge structures, including girders, deck panels, bent caps, abutments, slabs, closure wall panels, and piling
   1.2. Prestressed pavement
2. Tier 2 consists of:
   2.1. Components of earth retaining systems
   2.2. Wingwalls
   2.3. Types A, B, and C pipe culvert headwalls, endwalls, and wingwalls
   2.4. Pavement
   2.5. Box culverts
   2.6. Sound wall panels and supports
3. Tier 3 consists of:
   3.1. Pipes
   3.2. Pipe drainage facilities
   3.3. Straight and "L" pipe culvert headwalls except those listed under tier 2
   3.4. Drainage Inlets
   3.5. Flared end sections
4. Tier 4 consists of any member not described as tier 1, tier 2, or tier 3

90-4.01D(2) Quality Control

90-4.01D(2)(a) General

For tier 1 and tier 2 PC concrete members:

1. Fabricate PC concrete members at a plant on the Authorized Facility Audit List
2. Assign a PC concrete QC manager to the plant
3. Assign a QC inspector who is either registered as a civil engineer in the State or:
   3.1. For tier 1, has a Plant Quality Personnel Level II certification from the Precast/Prestressed Concrete Institute
   3.2. For tier 2, has a Plant Quality Personnel Level I certification from the Precast/Prestressed Concrete Institute
4. Prepare a PC concrete QC plan
5. Perform PC concrete materials testing
6. Maintain a daily production log
7. Prepare a PC concrete report
8. Prepare a certificate of compliance

For tier 3 PC concrete members:

1. Assign a QC inspector who has one of the following qualifications:
   1.1. Registration as a civil engineer in the State.
   1.2. Plant Quality Personnel, Level I certification from the Precast/Prestressed Concrete Institute.
   1.3. Competency to perform inspection of PC operations. An inspector is competent if the individual has completed training or has experience in PC operations and inspection.
2. Prepare a certificate of compliance

For tier 4 PC concrete members, prepare a certificate of compliance.

For each ASTM test method specified in this section, the material's test result must comply with the requirement specified for the comparable test in section 90 unless otherwise specified.

DocuSign Envelope ID: 894511EA-295B-49EB-A393-D26A6837FDD4

If curing compound is used, provide certificate of compliance as specified in section 90-1.01C(5).
If PC concrete is manufactured at an established PC concrete plant, a trial batch and prequalification of the materials, mix proportions, mixing equipment, and procedures under section 90-1.01D(5)(b) are not required.

90-4.01D(2)(b) Quality Control Meeting

After submitting the PC concrete QC plan, hold a meeting to discuss the requirements for PC concrete QC. The meeting attendees must include the Engineer, the PC concrete QC manager, and a representative from each plant performing PC concrete activities for the Contract.

90-4.01D(2)(c) Sampling, Testing, and Inspecting

The QC laboratory testing personnel or the QC inspector must witness sampling. The QC laboratory testing personnel must perform testing.
QC laboratory testing personnel must have the following certifications, as applicable:

1. ACI Strength Testing Technician
2. ACI Concrete Laboratory Testing Technician Level 1
3. ACI Aggregate Testing Technician Level 2

The QC Inspector must perform inspections before, during, and after casting is complete.
QC field testing and inspection personnel must have an ACI Concrete Field Testing Technician, Grade I certification.
For each mix design used for tier 1 and tier 2 PC concrete members, perform sampling and testing at the minimum frequencies shown in the following tables:

Aggregate QC Tests

Property	Test method	Minimum testing frequency
Aggregate gradation	ASTM C136	Once per 400 cu yd of concrete cast or once a week, whichever is more frequent
Sand equivalent	ASTM D2419	
Percent fines under 75 microns[a]	ASTM C117	
Moisture content of fine aggregate	ASTM C566, or electronically actuated moisture meter[b]	1–2 times per each day of pour, depending on conditions

[a]Percent fines under 75 microns test replaces the cleanness test in section 90-1.02C with the requirements of 1.5 percent maximum for "Operating Range" and 2.0 percent maximum for "Contract Compliance." The 5th paragraph of section 90-1.02C(2) does not apply.
[b]Electronically actuated moisture meter must be calibrated once per week per ASTM C566.

DocuSign Envelope ID: 894511EA-295B-49EB-A393-D26A6837FDD4

Concrete QC Tests

Property	Test method	Minimum testing frequency
Compressive strengthb	ASTM C172/C172M, ASTM C31/C31M, and ASTM C39/C39M	Once per 100 cu yd of concrete cast, or every day of casting, whichever is more frequent
Slump	ASTM C143/C143M	
Temperature	ASTM C1064/C1064M	
Density	ASTM C138	Once per 600 cu yd of concrete cast or each week of batching, whichever is more frequent
Air content	ASTM C231/C231M or ASTM C173/C173M[a]	If concrete is air entrained, once for each set of cylinders, and when conditions warrant

[a]ASTM C173/C173M must be used for lightweight concrete.
[b]Cylinders must be 6 by 12 inches.

If concrete is batched at more than 1 plant, perform the tests at each plant.
Cure test cylinders for determining time of prestressing loading in the same manner as the concrete in the member.
Cure test cylinders for determining compliance with 28-day strength requirements in the same manner as the member until completion of the steam curing process followed by a water bath or moist room at 60 to 80 degrees F until tested.
For PC concrete that is steam cured, concrete designated by compressive strength is acceptable if its compressive strength reaches the described 28-day compressive strength in no more than the maximum number of days specified or allowed after the concrete is cast.

90-4.01D(3) Quality Assurance

For PC concrete that is steam cured, the Engineer evaluates the compressive strength based on individual tests representing specific portions of production.

Add between the 1st and 2nd paragraphs of section 90-4.02:

07-19-13

PC portland cement based repair material must be on the Authorized Material List.
If municipally supplied potable water is used for PC concrete, the testing specified in section 90-1.02D is waived unless requested.

Add to section 90-4.03:

07-19-13

For dimensional tolerances of PC concrete members, comply with the Precast/Prestressed Concrete Institute Concrete Institute's *Tolerance Manual for Precast and Prestressed Concrete Construction, MNL 135-00*.
For tier 1 and tier 2 PC concrete members, apply curing compound using power-operated spraying equipment. You may request application by hand spraying for small quantities of PC concrete

DocuSign Envelope ID: 894511EA-295B-49EB-A393-D26A6837FDD4

members. For tier 3 and tier 4 PC concrete members, the application of curing compound may be hand sprayed.

Replace the item 2 in the list in the 2nd paragraph of section 90-4.03 with:

07-19-13

2. To prevent moisture loss on the exposed surfaces during the presteaming period, cover the concrete as soon as possible after casting or keep the exposed surfaces wet by fog spray, curing compound, or wet blankets.

^^

91 PAINT

10-19-12

Add to section 91-2:

10-19-12

91-2.03 MOISTURE-CURED POLYURETHANE COATING

Reserved

Replace "saint" in the 1st paragraph of section 91-4.05 with:

10-19-12

paint

^^

92 ASPHALTS

07-19-13

Replace "Reserved" in section 92-1.01B with:

07-19-13

modified asphalt binder: Asphalt binder modified with polymers, crumb rubber, or both.

Replace the row for dynamic shear for original binder in the table in the 1st paragraph of section 92-1.02B with:

01-20-12

Dynamic shear,						
Test temperature at 10 rad/s, °C	T 315	58	64	64	64	70
min G*/sin(delta), kPa		1.00	1.00	1.00	1.00	1.00
max G*/sin(delta), kPa		2.00	2.00	2.00	2.00	2.00

Replace 2nd paragraph of section 92-1.02B with:

07-19-13

PG modified asphalt binder must comply with the requirements shown in the following table:

PG Modified Asphalt Binder

Property	AASHTO Test Method	Grade		
		PG 58–34 M	PG 64–28 M	PG 76–22 M

DocuSign Envelope ID: 894511EA-295B-49EB-A393-D26A6837FDD4

Original Binder				
Flash point, min °C	T 48	230	230	230
Solubility, min %	T 44[a]	97.5	97.5	97.5[b]
Viscosity at 135 °C[c], max, Pa·s	T 316	3.0	3.0	3.0
Dynamic shear, Test temperature at 10 rad/s, °C min G*/sin(delta), kPa	T 315	58 1.00	64 1.00	76 1.00
RTFO test[d], Mass loss, max, %	T 240	1.00	1.00	1.00
RTFO Test Aged Binder				
Dynamic shear, Test temperature at 10 rad/s, °C min G*/sin(delta), kPa	T 315	58 2.20	64 2.20	76 2.20
Dynamic shear, Test temperature at 10 rad/s, °C max (delta), degree	T 315	80[e]	80[e]	80[e]
Elastic recovery[f], Test temperature °C min recovery, %	T 301	25 75	25 75	25 65
PAV[g], temperature, °C	R 28	100	100	110
RTFO Test and PAV Aged Binder				
Dynamic shear, Test temperature at 10 rad/s, °C max G*sin(delta), kPa	T 315	16 5000	22 5000	31 5000
Creep stiffness, Test temperature, °C max S-value, MPa min M-value	T 313	-24 300 0.300	-18 300 0.300	-12 300 0.300

[a]The Department allows ASTM D 5546 or ASTM D 7753 instead of AASHTO T 44. Particles recovered from ASTM D 5546 or ASTM D 7753 or AASHTO T 44 must be less than 250 µm.
[b]Report only for spray application.
[c]The Engineer waives this specification if the supplier provides written certification the asphalt can be adequately pumped and mixed at temperatures meeting applicable safety standards.
[d]"RTFO Test" means the asphaltic residue obtained using the Rolling Thin Film Oven Test, AASHTO Test Method T 240 or ASTM D 2872. The residue from mass change determination may be used for other tests.
[e]Test temperature is the temperature at which G*/sin(delta) is 2.2 kPa. A graph of log G*/sin(delta) plotted against temperature may be used to determine the test temperature when G*/sin(delta) is 2.2 kPa. A graph of (delta) versus temperature may be used to determine delta at the temperature when G*/sin(delta) is 2.2 kPa. The graph must have at least two points that envelope G*/sin(delta) of 2.2 kPa and the test temperature must not be more than 6 degree C apart. The Engineer also accepts direct measurement of (delta) at the temperature when G*/sin(delta) is 2.2 kPa.
[f]Tests without a force ductility clamp may be performed.
[g]"PAV" means "Pressure Aging Vessel."

Do not modify PG modified asphalt binder using polyphosphoric acid.

Crumb rubber must be from automobile and truck tires and must be free from contaminants including fabric, metal, minerals, and other nonrubber substances.

PG modified asphalt binder modified with crumb rubber must be homogeneous and must not contain visible particles of crumb rubber.

DocuSign Envelope ID: 894511EA-295B-49EB-A393-D26A6837FDD4

The supplier of PG modified asphalt binder modified with crumb rubber must:

1. Report the amount of crumb rubber by weight of asphalt binder
2. Certify a minimum of 10 percent of crumb rubber by weight of asphalt binder

^^

93 LIQUID ASPHALTS

07-19-13

Replace "Celsius" the 1st row in the table in the 8th paragraph of section 93-1.04 with:

07-19-13

Fahrenheit

^^

94 ASPHALTIC EMULSIONS

03-21-14

Replace the 1st paragraph of section 94-1.04 with:

03-21-14

Asphaltic emulsion is measured by weight under the specifications requiring its use. If water is added to the asphaltic emulsion, the quantity of asphaltic emulsion is determined before the addition of water.

DocuSign Envelope ID: 894511EA-295B-49EB-A393-D26A6837FDD4

DocuSign Envelope ID: 894511EA-295B-49EB-A393-D26A6837FDD4

APPENDIX C – LOGICAL NETWORK DETAILS

DocuSign Envelope ID: 894511EA-295B-49EB-A393-D26A6837FDD4

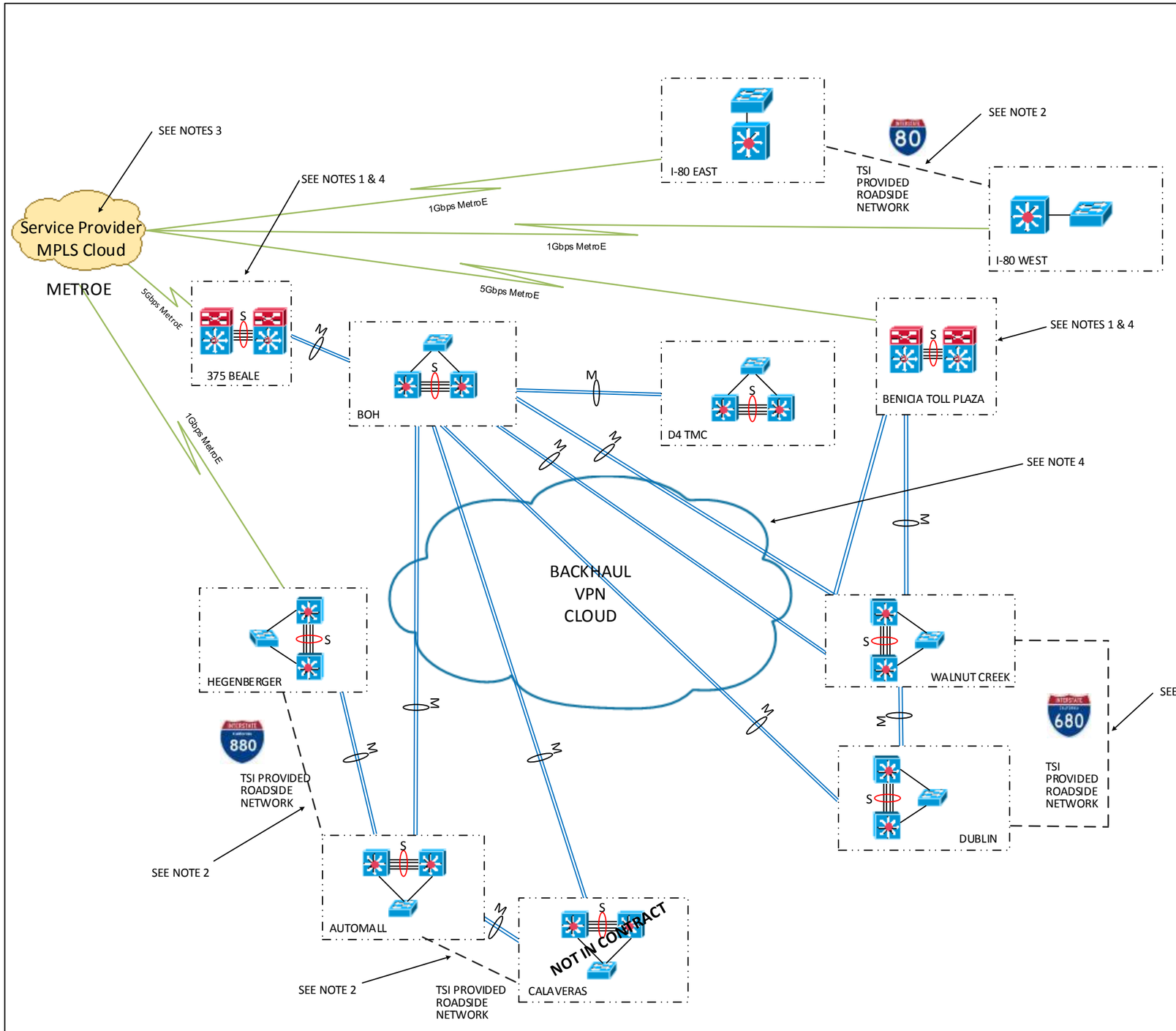

NOTES:

1. PRIMARY AND SECONDARY DATA CENTER LOCATIONS.
2. TOLL COLLECTION SYSTEM ROADSIDE NETWORK BY OTHERS.
3. 1 GBPS AND 5 GBPS METROE CONNECTIONS ARE PRELIMINARY ESTIMATES. FINAL BANDWIDTH WILL BE DETERMINED BY BAIFA.
4. CONFIGURE VIRTUAL PRIVATE NETWORK(S) TO PROVIDE SEPARATION OF TOLL SYSTEM TRAFFIC AT ALL BACKHAUL HUB AND DATA CENTER LOCATIONS

LEGEND:

- LOCATION GROUP
- BAIFA BACKHAUL HUB/DATA CENTER CORE SWITCH LOCATION WITH INTELLIGENT SWITCHING AND ROUTING NETWORK HARDWARE
- BAIFA BACKHAUL HUB L3 DISTRIBUTION SWITCH LOCATION WITH INTELLIGENT SWITCHING AND ROUTING NETWORK HARDWARE
- BAIFA BACKHAUL ACCESS LAYER 2 SWITCHING NETWORK HARDWARE
- BACKHAUL METROE CONNECTION (METROE)
- BAIFA BACKHAUL NETWORK FIBER OPTIC CABLE NEW OR PROVIDED BY OTHERS
- TOLL COLLECTION ROADSIDE NETWORK (NOT IN CONTRACT)
- M — LAYER 2 TRUNK LINKS
- S — ETHERCHANNEL/VSS OR SIMILAR STACK CONNECTION

No.	DATE	ISSUE / REVISION

SUBMITTED BY:
ATKINS
332 Pine Street
5th Floor
San Francisco, CA 94104

PROJECT
BAIFA Backhaul Communications Network

TITLE
BACKHAUL OVERVIEW DIAGRAM

SCALE
None

PAGE

DocuSign Envelope ID: 894511EA-295B-49EB-A393-D26A6837FDD4

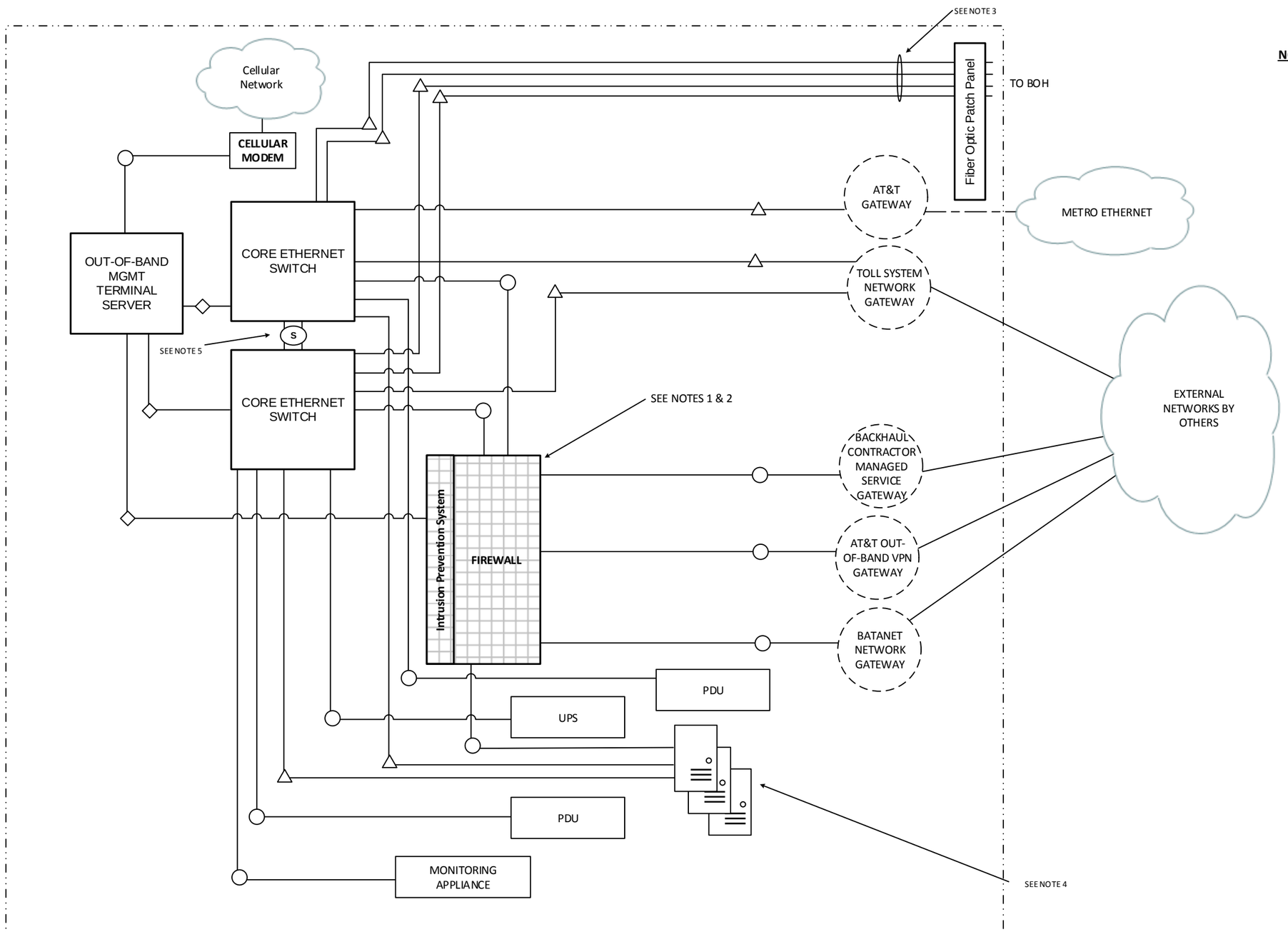

375 Beale

NOTE:

1. INTRUSION PREVENTION SYSTEM (IPS) FUNCTION MAY BE INTEGRATED INTO FIREWALL OR PROVIDED AS A SEPARATE APPLIANCE INLINE WITH BACKHAUL INTERNAL AND MANAGEMENT NETWORKS
2. FIREWALL AND IPS FUNCTIONS MAY BE INTEGRATED INTO CORE SWITCH
3. LAYER 2 CONFIGURED TRUNK LINKS TO/FROM ADJACENT HUBS
4. THE SERVER HARDWARE SHOWN IS FOR ILLUSTRATIVE PURPOSES ONLY. THE ACTUAL CONFIGURATION OF SERVERS AND NUMBER OF UPLINKS WILL BE DETERMINED DURING IMPLEMENTATION REVIEW
5. ETHERCHANNEL/VSS OR SIMILAR STACK CONNECTION

LEGEND:

- NETWORK EQUIPMENT BY OTHERS
- NEW NETWORK EQUIPMENT
- NEW OR EXISTING BACKHAUL FIBER OPTIC NETWORK CABLE
- METRO ETHERNET COMM LINK
- 10GBASE-xR
- 10/100/1000 BASE-T
- RS-232 SERIAL
- S — ETHERCHANNEL/VSS OR SIMILAR STACK CONNECTION
- LOCATION GROUP
- OTHER NETWORK
- NETWORK MANAGEMENT VIRTUAL CLUSTER HARDWARE

No.	DATE	ISSUE / REVISION

SUBMITTED BY:

ATKINS
332 Pine Street
5th Floor
San Francisco, CA 94104

PROJECT

BAIFA Backhaul Communications Network

TITLE

375 Beale Physical Interconnections

SCALE

None

PAGE

DocuSign Envelope ID: 894511EA-295B-49EB-A393-D26A6837FDD4

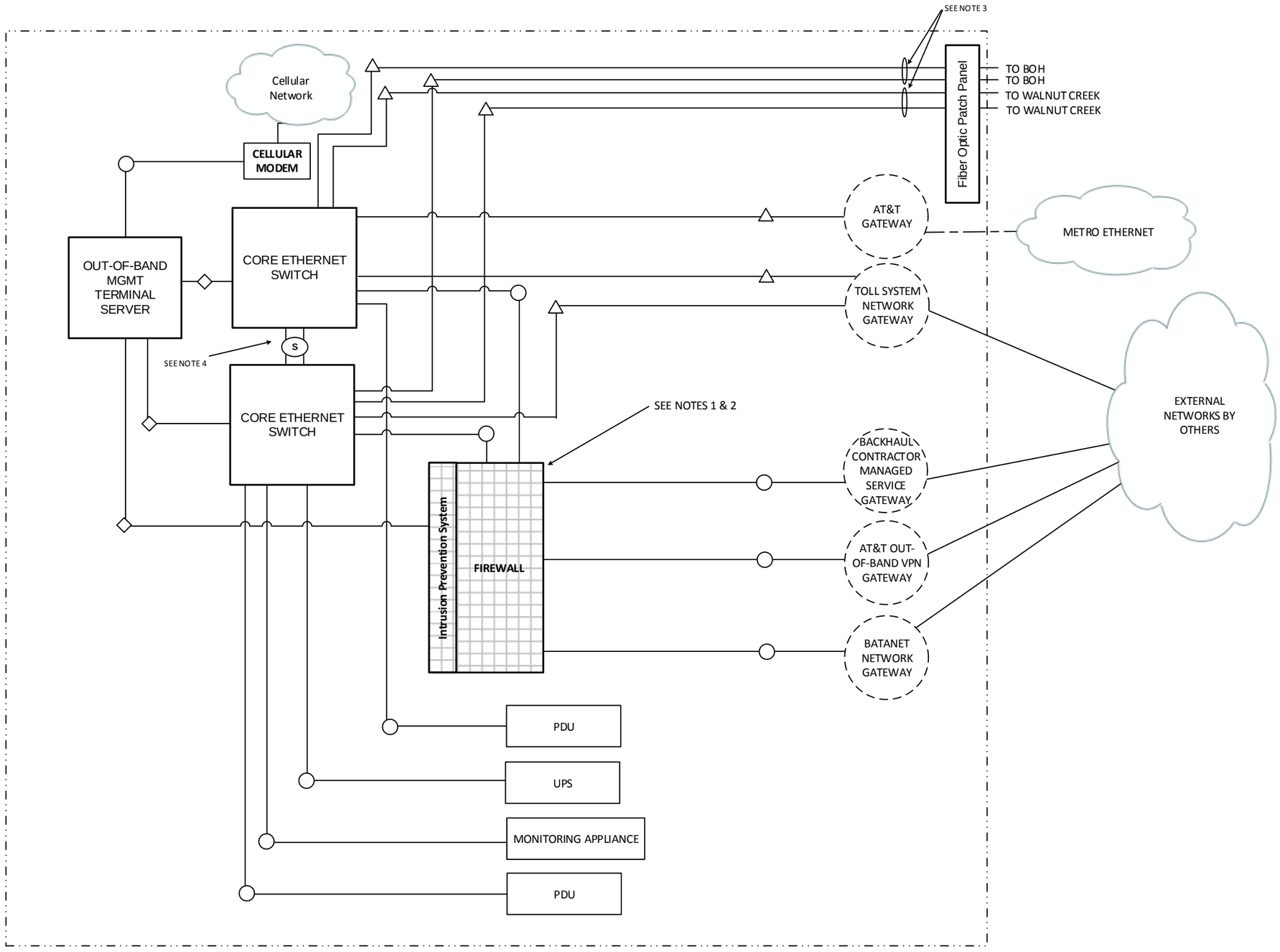

BENICIA TOLL PLAZA

NOTE:

1. INTRUSION PREVENTION SYSTEM (IPS) FUNCTION MAY BE INTEGRATED INTO FIREWALL OR PROVIDED AS A SEPARATE APPLIANCE INLINE WITH BACKHAUL INTERNAL AND MANAGEMENT NETWORKS
2. FIREWALL AND IPS FUNCTIONS MAY BE INTEGRATED INTO CORE SWITCH
3. LAYER 2 CONFIGURED TRUNK LINKS TO/FROM ADJACENT HUBS
4. ETHERCHANNEL/VSS OR SIMILAR STACK CONNECTION

LEGEND:

- NETWORK EQUIPMENT BY OTHERS
- NEW NETWORK EQUIPMENT
- NEW OR EXISTING BACKHAUL FIBER OPTIC NETWORK CABLE
- METRO ETHERNET COMM LINK
- 10GBASE-xR
- 10/100/1000 BASE-T
- RS-232 SERIAL
- S — ETHERCHANNEL/VSS OR SIMILAR STACK CONNECTION
- LOCATION GROUP
- OTHER NETWORK
- NETWORK MANAGEMENT VIRTUAL CLUSTER HARDWARE

No.	DATE	ISSUE / REVISION

SUBMITTED BY:
ATKINS
332 Pine Street
5th Floor
San Francisco, CA 94104

PROJECT
BAIFA Backhaul Communications Network

TITLE
Benicia Toll Plaza Physical Interconnections

SCALE
None

PAGE

DocuSign Envelope ID: 894511EA-295B-49EB-A393-D26A6837FDD4

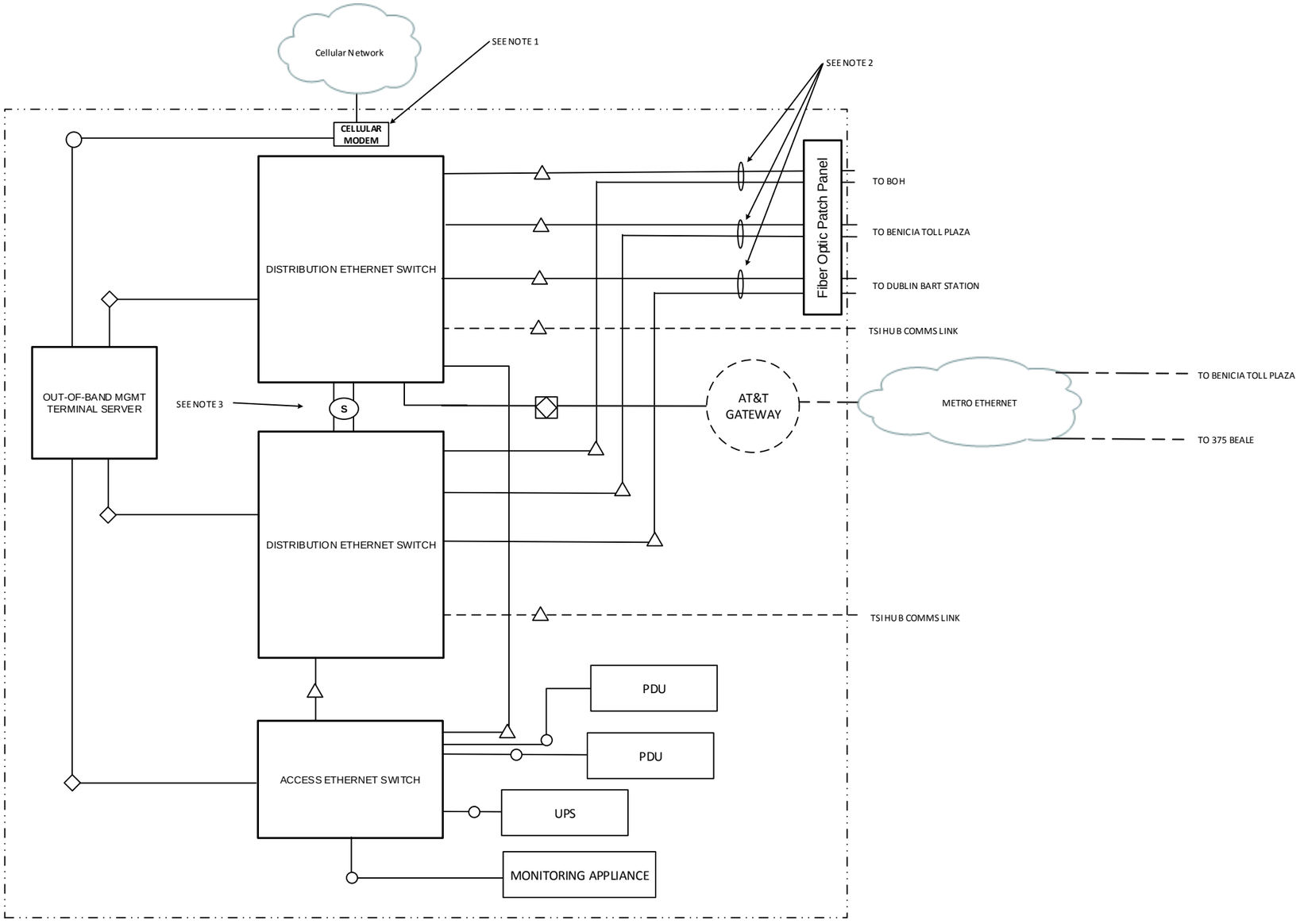

WALNUT CREEK

NOTES:

1. OUT-OF-BAND CELLULAR MODEM HARDWARE FURNISHED AND INSTALLED BY OTHERS
2. LAYER 2 CONFIGURED TRUNK LINKS TO/FROM ADJACENT HUBS AND DATA CENTERS
3. ETHERCHANNEL/VSS OR SIMILAR STACK CONNECTION

LEGEND:

- Location Group
- NETWORK EQUIPMENT BY OTHERS
- NEW NETWORK EQUIPMENT
- 10/100/1000 BASE-T
- 1000BASE-LX
- 10GBASE-xR
- RS-232 SERIAL
- NEW OR EXISTING BACKHAUL FIBER OPTIC NETWORK CABLE
- METRO ETHERNET COMM LINK
- ROADSIDE NETWORK CONNECTION(S) TO BACKHAUL NETWORK BY OTHERS
- OTHER NETWORK

No.	DATE	ISSUE / REVISION

SUBMITTED BY:

ATKINS
332 Pine Street
5th Floor
San Francisco, CA 94104

PROJECT

BAIFA Backhaul Communications Network

TITLE

Walnut Creek Physical Interconnections

SCALE

None

PAGE

DocuSign Envelope ID: 894511EA-295B-49EB-A393-D26A6837FDD4

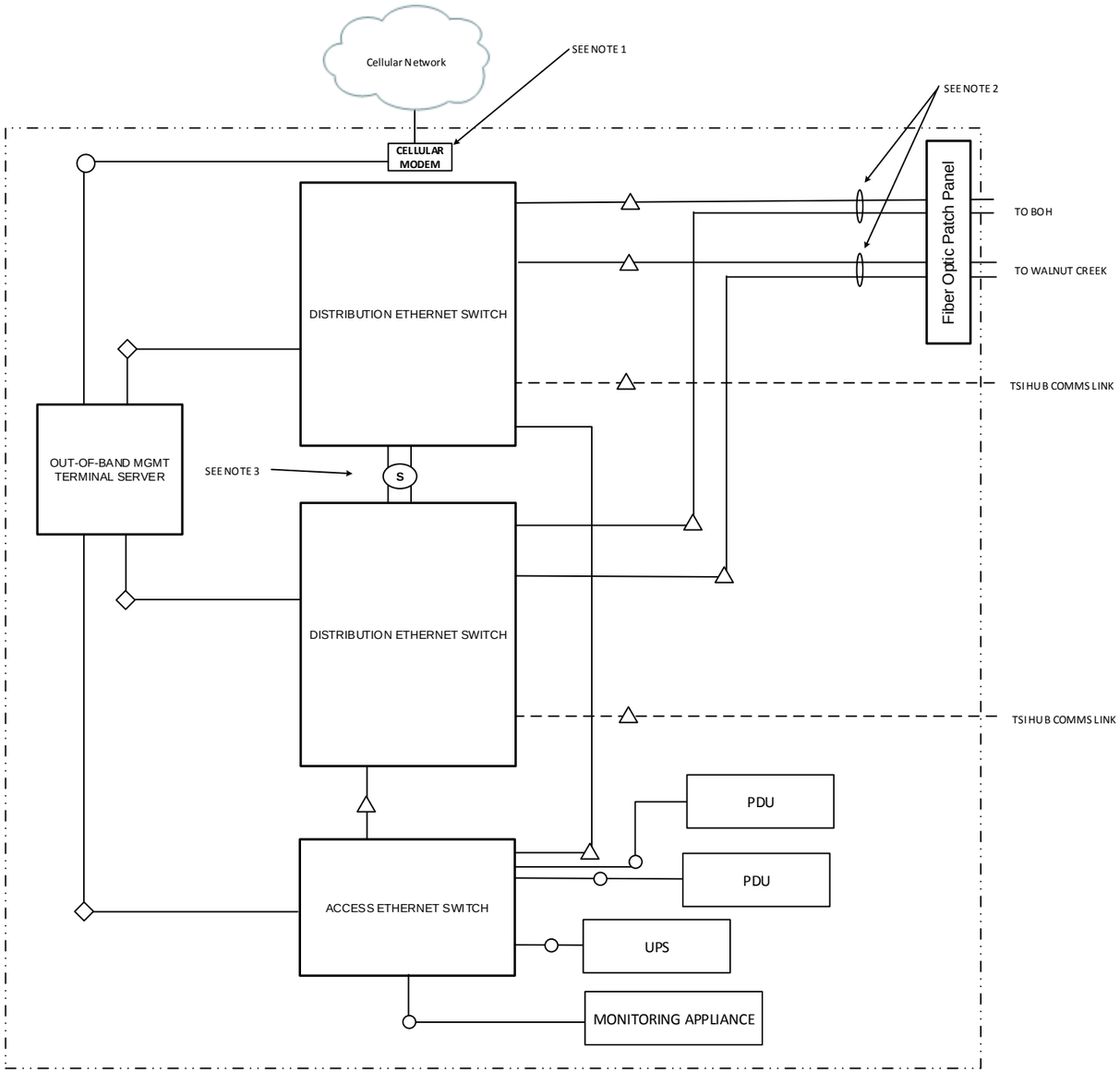

WEST DUBLIN

NOTES:

1. OUT-OF-BAND CELLULAR MODEM HARDWARE FURNISHED AND INSTALLED BY OTHERS
2. LAYER 2 CONFIGURED TRUNK LINKS TO/FROM ADJACENT HUBS
3. ETHERCHANNEL/VSS OR SIMILAR STACK CONNECTION

LEGEND:

- Location Group
- NEW NETWORK EQUIPMENT
- 10/100/1000 BASE-T
- 10GBASE-xR
- RS-232 SERIAL
- S — ETHERCHANNEL/VSS OR SIMILAR STACK CONNECTION
- NEW OR EXISTING BACKHAUL FIBER OPTIC NETWORK CABLE
- METRO ETHERNET COMM LINK
- ROADSIDE NETWORK CONNECTION(S) TO BACKHAUL NETWORK BY OTHERS
- OTHER NETWORK

No.	DATE	ISSUE / REVISION

SUBMITTED BY:
ATKINS
332 Pine Street
5th Floor
San Francisco, CA 94104

PROJECT
BAIFA Backhaul Communications Network

TITLE
West Dublin Physical Interconnections

SCALE
None

PAGE

DocuSign Envelope ID: 894511EA-295B-49EB-A393-D26A6837FDD4

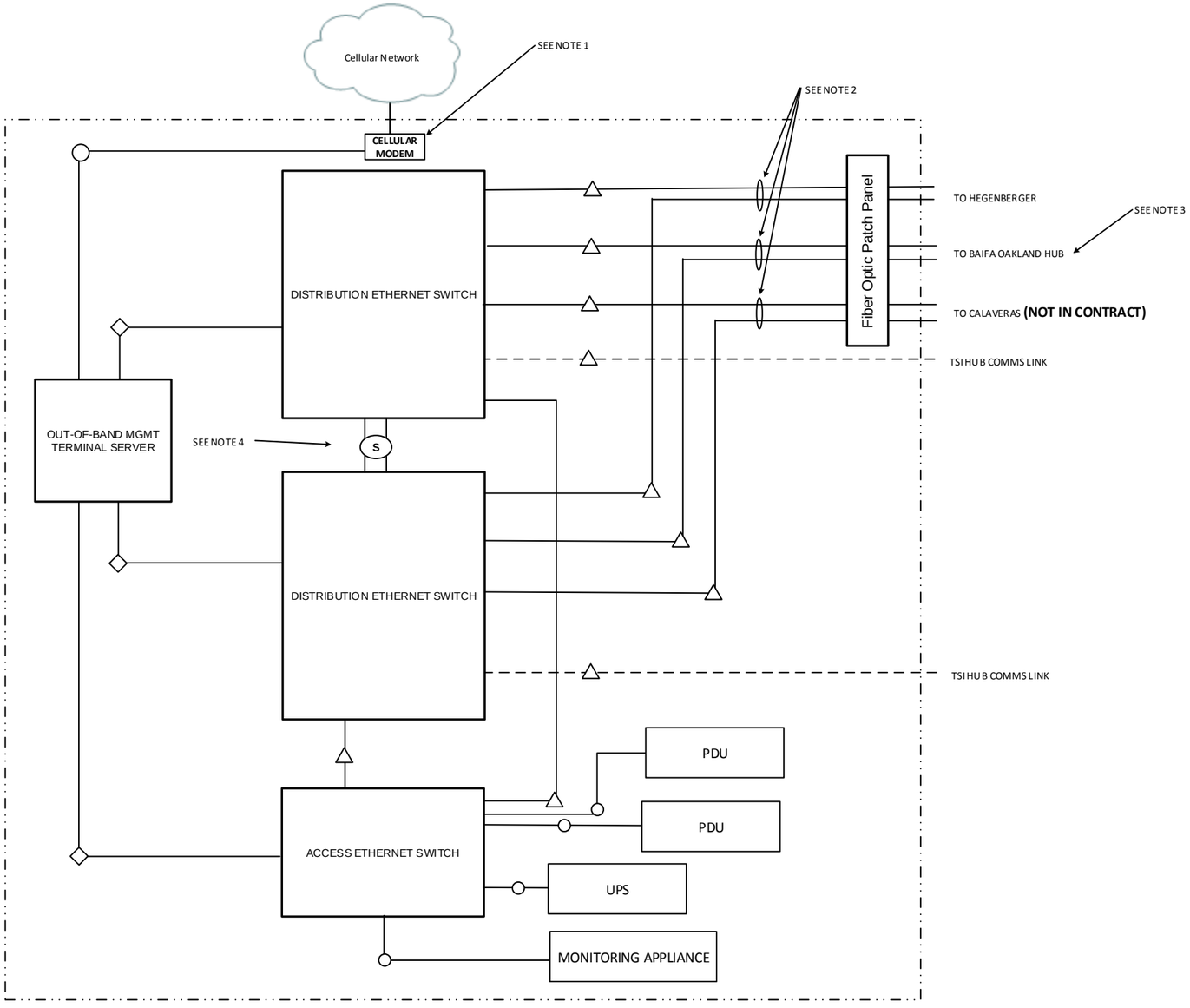

AUTOMALL

NOTES:

1. OUT-OF-BAND CELLULAR MODEM HARDWARE FURNISHED AND INSTALLED BY OTHERS
2. LAYER 2 CONFIGURED TRUNK LINKS TO/FROM ADJACENT HUBS
3. CONNECTION FROM AUTOMALL HUB TO BOH HUB VIA CROSS-CONNECTION AT FREMONT BART STATION AND SILICON VALLEY ITS TRAFFIC OPERATIONS CENTER
4. ETHERCHANNEL/VSS OR SIMILAR STACK CONNECTION

LEGEND:

- Location Group
- NEW NETWORK EQUIPMENT
- 10/100/1000 BASE-T
- 10GBASE-xR
- RS-232 SERIAL
- (S) ETHERCHANNEL/VSS OR SIMILAR STACK CONNECTION
- NEW OR EXISTING BACKHAUL FIBER OPTIC NETWORK CABLE
- METRO ETHERNET COMM LINK
- ROADSIDE NETWORK CONNECTION(S) TO BACKHAUL NETWORK BY OTHERS
- OTHER NETWORK

No.	DATE	ISSUE / REVISION

SUBMITTED BY:
ATKINS
332 Pine Street
5th Floor
San Francisco, CA 94104

PROJECT
BAIFA Backhaul Communications Network

TITLE
Automall Physical Interconnections

SCALE
None

PAGE

DocuSign Envelope ID: 894511EA-295B-49EB-A393-D26A6837FDD4

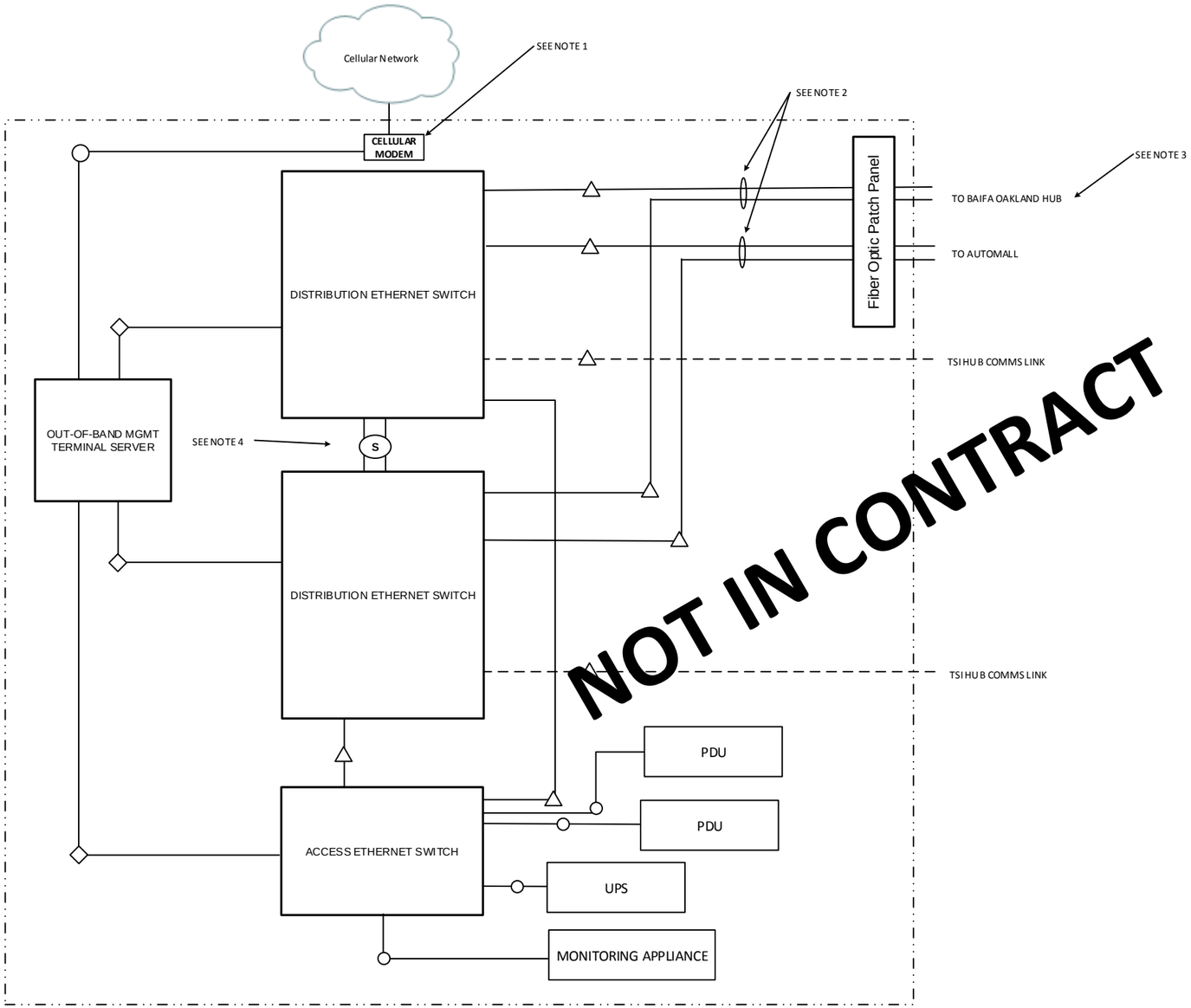

NOT IN CONTRACT

CALAVERAS

NOTES:

1. OUT-OF-BAND CELLULAR MODEM HARDWARE FURNISHED AND INSTALLED BY OTHERS
2. LAYER 2 CONFIGURED TRUNK LINKS TO/FROM ADJACENT HUBS
3. CONNECTION FROM CALAVERAS HUB TO BOH HUB VIA CROSS-CONNECTION AT FREMONT BART STATION AND SILICON VALLEY ITS TRAFFIC OPERATIONS CENTER.
4. ETHERCHANNEL/VSS OR SIMILAR STACK CONNECTION

LEGEND:

- Location Group
- NEW NETWORK EQUIPMENT
- 10/100/1000 BASE-T
- 10GBASE-xR
- RS-232 SERIAL
- (S) ETHERCHANNEL/VSS OR SIMILAR STACK CONNECTION
- NEW OR EXISTING BACKHAUL FIBER OPTIC NETWORK CABLE
- METRO ETHERNET COMM LINK
- ROADSIDE NETWORK CONNECTION(S) TO BACKHAUL NETWORK BY OTHERS
- OTHER NETWORK

No.	DATE	ISSUE / REVISION

SUBMITTED BY:

ATKINS
332 Pine Street
5th Floor
San Francisco, CA 94104

PROJECT

BAIFA Backhaul Communications Network

TITLE
Calaveras Physical Interconnections

SCALE
None

PAGE

DocuSign Envelope ID: 894511EA-295B-49EB-A393-D26A6837FDD4

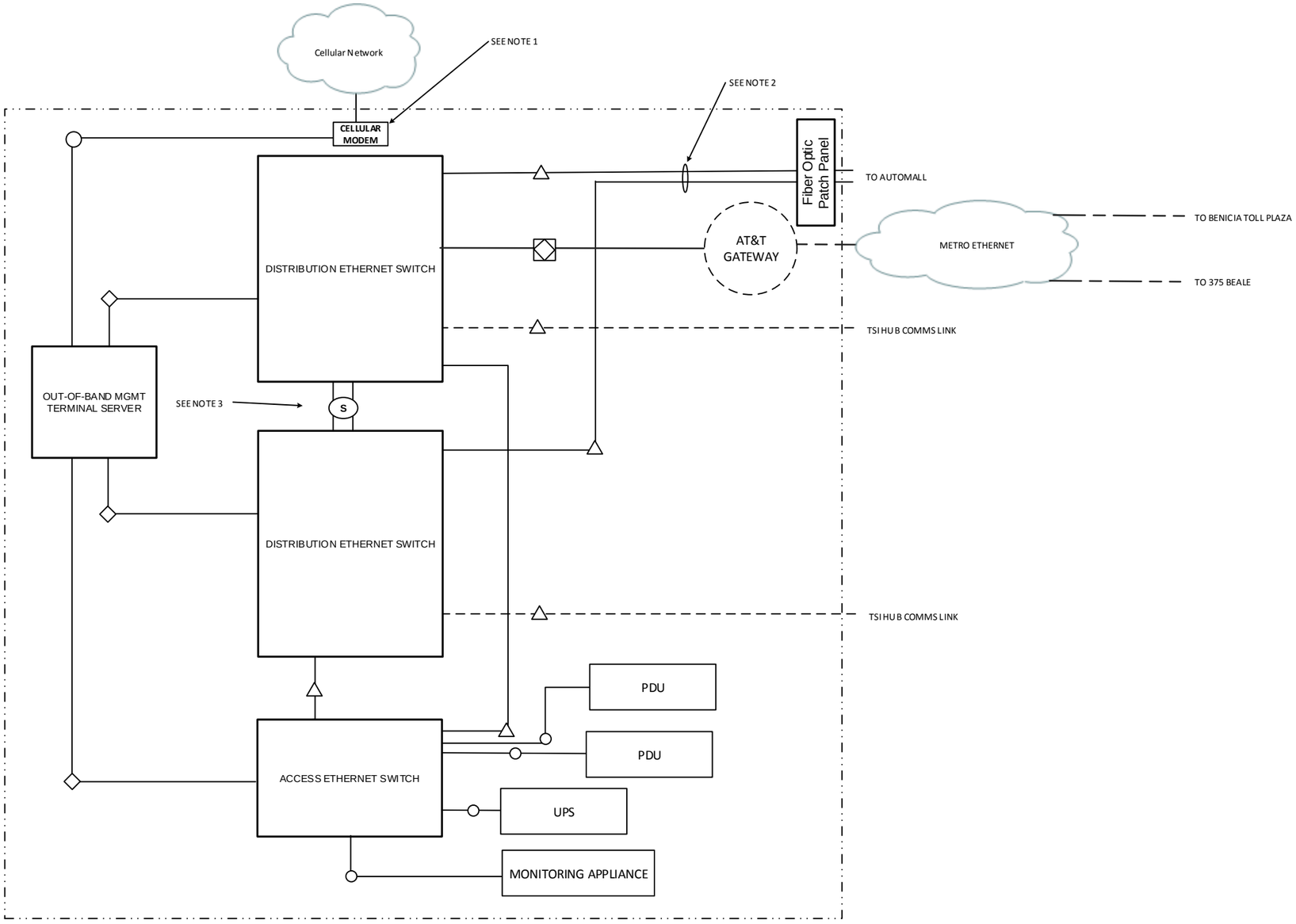

NOTES:

1. OUT-OF-BAND CELLULAR MODEM HARDWARE FURNISHED AND INSTALLED BY OTHERS
2. LAYER 2 CONFIGURED TRUNK LINKS TO/FROM ADJACENT HUBS
3. ETHERCHANNEL/VSS OR SIMILAR STACK CONNECTION

LEGEND:

- Location Group
- NEW NETWORK EQUIPMENT
- 10/100/1000 BASE-T
- 10GBASE-xR
- RS-232 SERIAL
- S — ETHERCHANNEL/VSS OR SIMILAR STACK CONNECTION
- 1000BASE-LX
- NEW OR EXISTING BACKHAUL FIBER OPTIC NETWORK CABLE
- METRO ETHERNET COMM LINK
- ROADSIDE NETWORK CONNECTION(S) TO BACKHAUL NETWORK BY OTHERS
- OTHER NETWORK

HEGENBERGER

No.	DATE	ISSUE / REVISION

SUBMITTED BY:
ATKINS
332 Pine Street
5th Floor
San Francisco, CA 94104

PROJECT
BAIFA Backhaul Communications Network

TITLE
Hegenberger Physical Interconnections

SCALE
None

PAGE

DocuSign Envelope ID: 894511EA-295B-49EB-A393-D26A6837FDD4

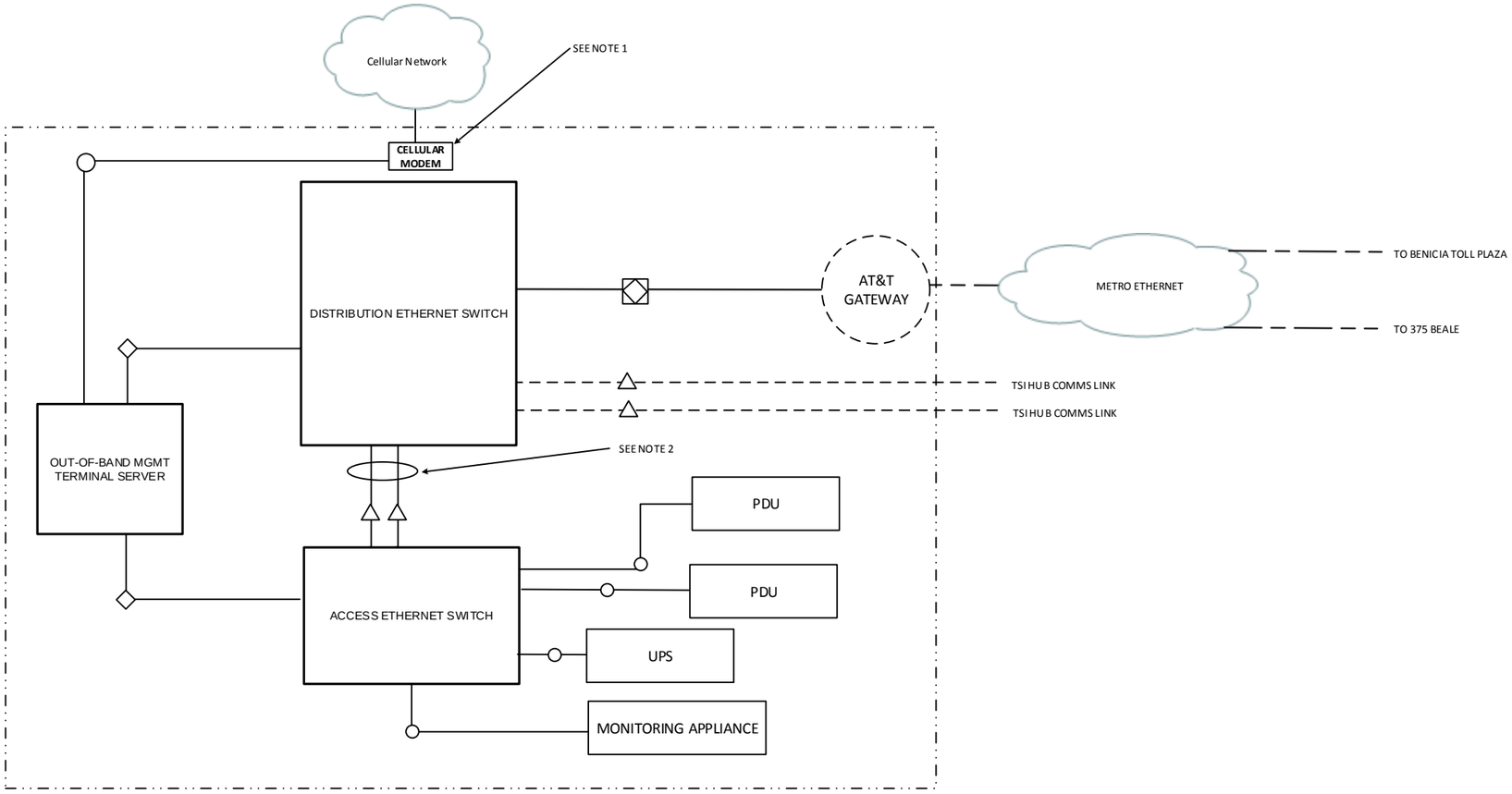

I-80 EAST

NOTES:

1. OUT-OF-BAND CELLULAR MODEM HARDWARE FURNISHED AND INSTALLED BY OTHERS
2. IEEE 802.3AD LINK AGGREGATION USED TO FORM 2Gbps TRUNK LINK.

LEGEND:

- Location Group
- NETWORK EQUIPMENT BY OTHERS
- NEW NETWORK EQUIPMENT
- 10/100/1000 BASE-T
- 1000BASE-LX
- 10GBASE-xR
- RS-232 SERIAL
- NEW OR EXISTING BACKHAUL FIBER OPTIC NETWORK CABLE
- METRO ETHERNET COMM LINK
- ROADSIDE NETWORK CONNECTION(S) TO BACKHAUL NETWORK BY OTHERS
- OTHER NETWORK

No.	DATE	ISSUE / REVISION

SUBMITTED BY:

ATKINS 332 Pine Street
5th Floor
San Francisco, CA 94104

PROJECT

BAIFA Backhaul Communications Network

TITLE

I-80 East Physical Interconnections

SCALE

None

PAGE

DocuSign Envelope ID: 894511EA-295B-49EB-A393-D26A6837FDD4

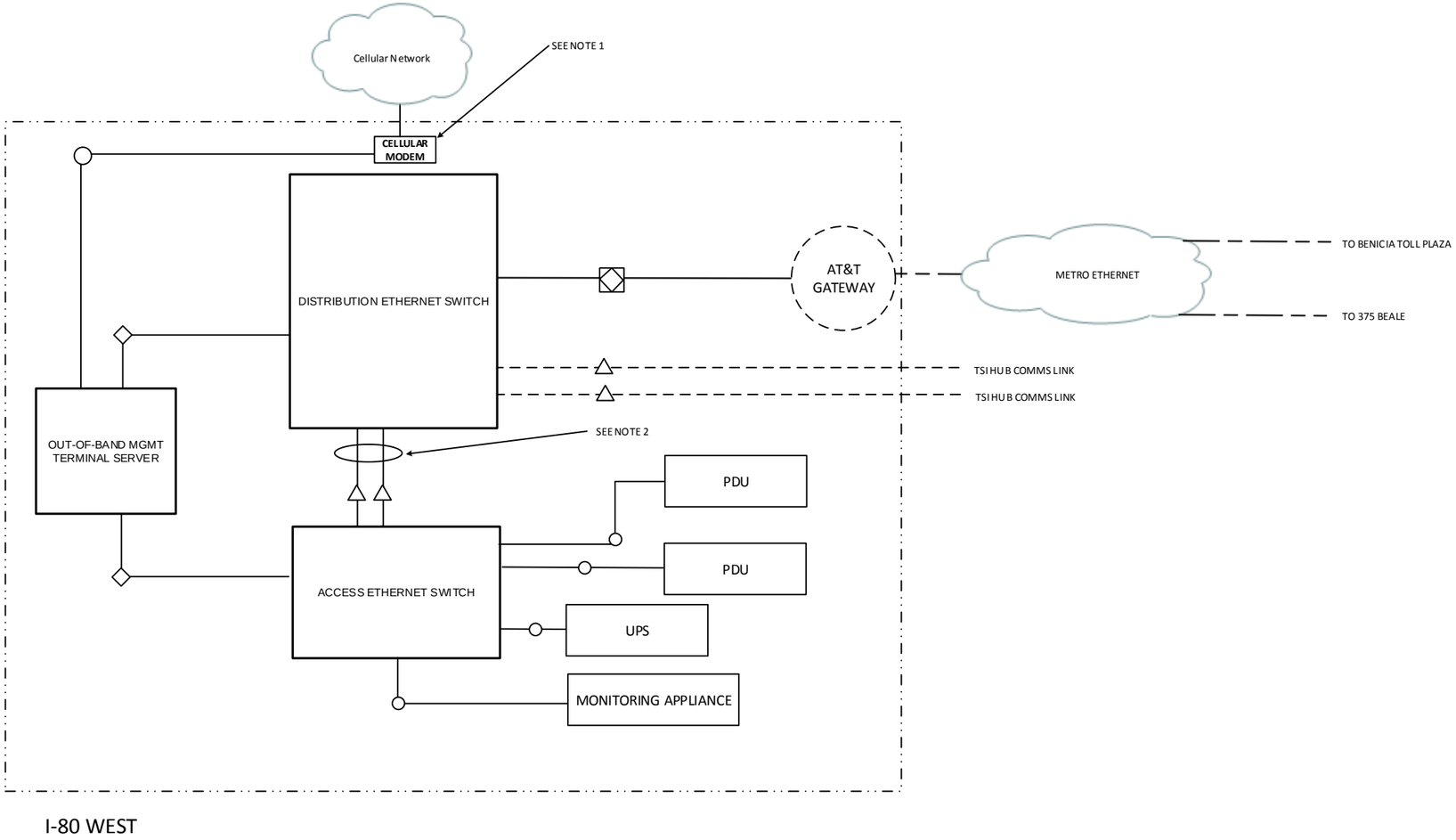

NOTES:

1. OUT-OF-BAND CELLULAR MODEM HARDWARE FURNISHED AND INSTALLED BY OTHERS
2. IEEE 802.3AD LINK AGGREGATION USED TO FORM 2Gbps TRUNK LINK.

LEGEND:

- Location Group
- NETWORK EQUIPMENT BY OTHERS
- NEW NETWORK EQUIPMENT
- 10/100/1000 BASE-T
- 1000BASE-LX
- 10GBASE-xR
- RS-232 SERIAL
- NEW OR EXISTING BACKHAUL FIBER OPTIC NETWORK CABLE
- METRO ETHERNET COMM LINK
- ROADSIDE NETWORK CONNECTION(S) TO BACKHAUL NETWORK BY OTHERS
- OTHER NETWORK

No.	DATE	ISSUE / REVISION

SUBMITTED BY:
ATKINS
332 Pine Street
5th Floor
San Francisco, CA 94104

PROJECT
BAIFA Backhaul Communications Network

TITLE
I-80 West Physical Interconnections

SCALE
None

PAGE

DocuSign Envelope ID: 894511EA-295B-49EB-A393-D26A6837FDD4

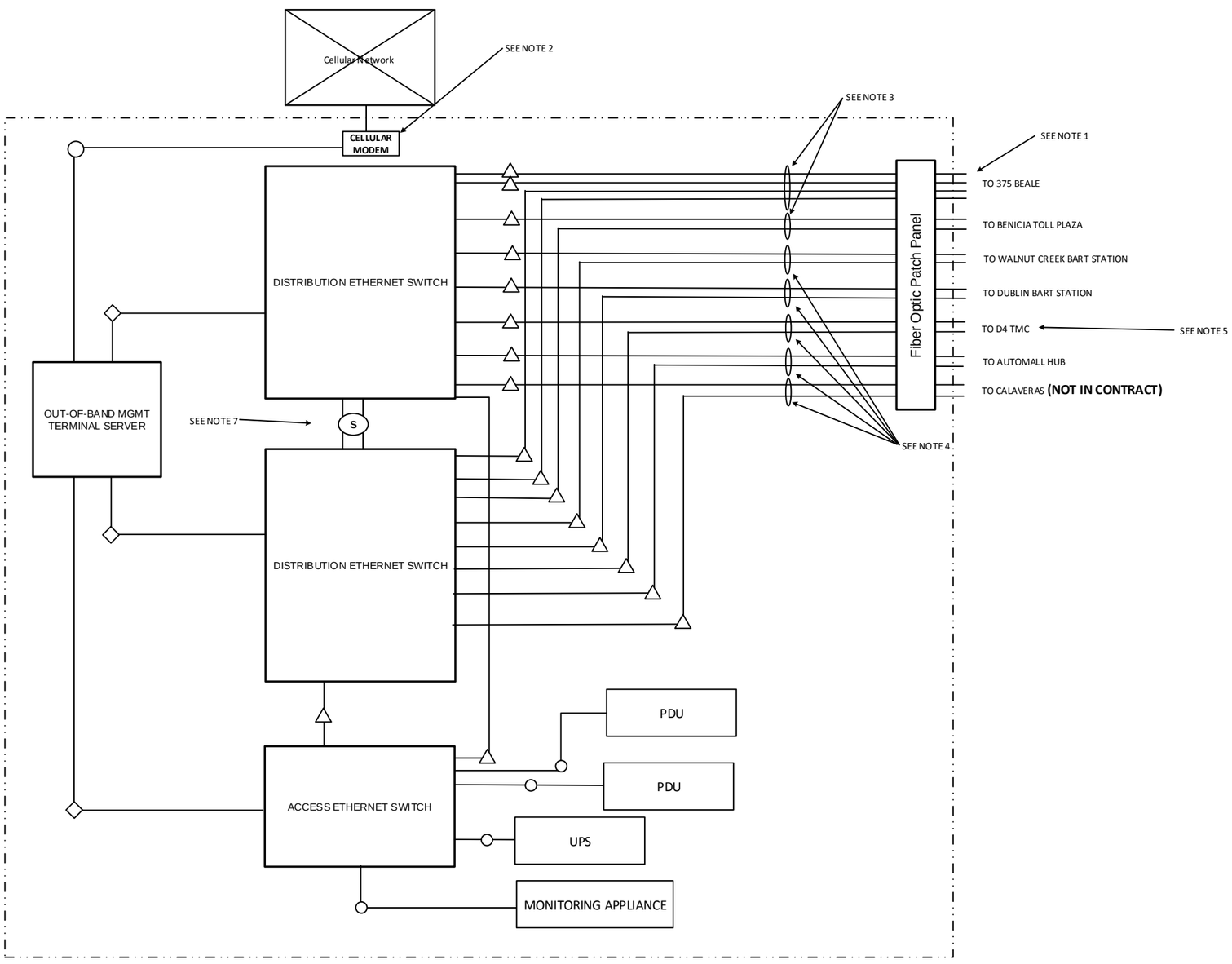

BAIFA OAKLAND HUB (BOH)

NOTES:

1. CONNECTION IS PATCHED/CROSS-CONNECTED AT BART CFH AND EMBARCADERO FACILITIES BY OTHERS BEFORE CONTINUING TO CORE SWITCH(ES) AT 375 BEALE.
2. OUT-OF-BAND CELLULAR MODEM HARDWARE FURNISHED AND INSTALLED BY OTHERS.
3. LAYER 2 CONFIGURED TRUNK LINKS TO/FROM ADJACENT DATA CENTER LOCATION
4. LAYER 2 CONFIGURED TRUNK LINKS TO/FROM ADJACENT HUBS
5. CONNECTION FROM BOH TO CALTRANS TMC VIA CROSS-CONNECTION AT 19th STREET BART.
6. CONNECTION FROM BOH TO AUTOMALL HUB AND CALAVERAS HUB VIA CROSS-CONNECTION AT FREMONT BART STATION AND SILICON VALLEY ITS TRAFFIC OPERATIONS CENTER.
7. ETHERCHANNEL/VSS OR SIMILAR STACK CONNECTION

LEGEND:

- Location Group
- NEW NETWORK EQUIPMENT
- 10/100/1000 BASE-T
- 10GBASE-xR
- S — ETHERCHANNEL/VSS OR SIMILAR STACK CONNECTION
- RS-232 SERIAL
- NEW OR EXISTING BACKHAUL FIBER OPTIC NETWORK CABLE
- METRO ETHERNET COMM LINK
- ROADSIDE NETWORK CONNECTION(S) TO BACKHAUL NETWORK BY OTHERS
- OTHER NETWORK

No.	DATE	ISSUE / REVISION

SUBMITTED BY:
ATKINS
332 Pine Street
5th Floor
San Francisco, CA 94104

PROJECT
BAIFA Backhaul Communications Network

TITLE
BOH Physical Interconnections

SCALE
None

PAGE

DocuSign Envelope ID: 894511EA-295B-49EB-A393-D26A6837FDD4

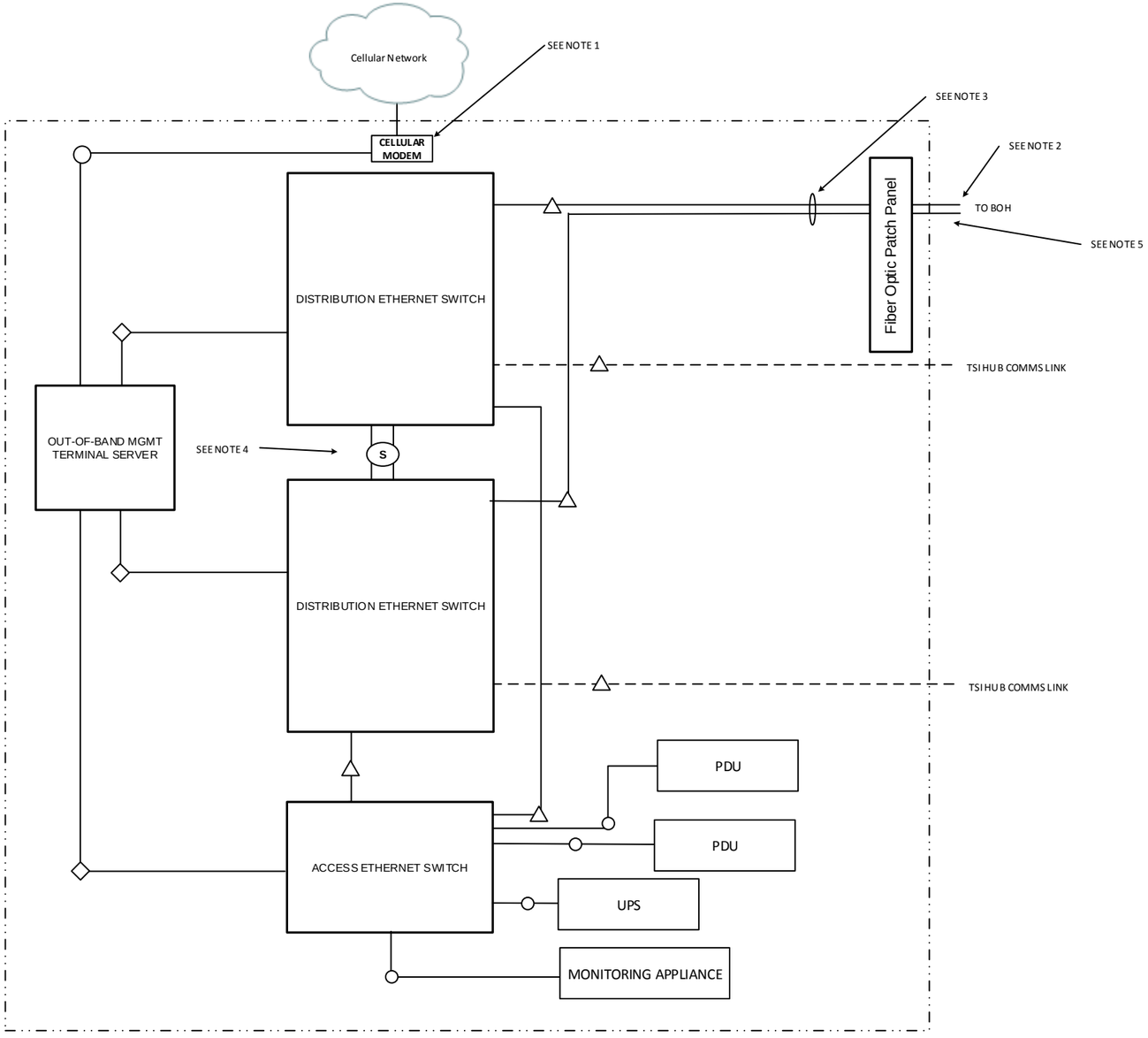

CALTRANS D4 TMC

NOTES:

1. OUT-OF-BAND CELLULAR MODEM HARDWARE FURNISHED AND INSTALLED BY OTHERS
2. CONNECTION FROM CALTRANS TMC TO BOH VIA CROSS-CONNECTION AT 19th STREET BART.
3. LAYER 2 CONFIGURED TRUNK LINKS TO/FROM ADJACENT HUBS
4. ETHERCHANNEL/VSS OR SIMILAR STACK CONNECTION
5. FURNISH, INSTALL AND TEST INSIDE WIRING FROM TMC COMMS ROOM FIBER OPTIC PATCH PANEL TO BACKHAUL DESIGNATED RACK SPACE IN 7th FLOOR SERVER ROOM.

LEGEND:

- Location Group
- NEW NETWORK EQUIPMENT
- 10/100/1000 BASE-T
- 10GBASE-xR
- RS-232 SERIAL
- S — ETHERCHANNEL/VSS OR SIMILAR STACK CONNECTION
- NEW OR EXISTING BACKHAUL FIBER OPTIC NETWORK CABLE
- METRO ETHERNET COMM LINK
- ROADSIDE NETWORK CONNECTION(S) TO BACKHAUL NETWORK BY OTHERS
- OTHER NETWORK

No.	DATE	ISSUE / REVISION

SUBMITTED BY:

ATKINS
332 Pine Street
5th Floor
San Francisco, CA 94104

PROJECT

BAIFA Backhaul Communications Network

TITLE

Caltrans D4 TMC Physical Interconnections

SCALE

None

PAGE

DocuSign Envelope ID: 894511EA-295B-49EB-A393-D26A6837FDD4

APPENDIX D – WAGE DETERMINATIONS

DocuSign Envelope ID: 894511EA-295B-49EB-A393-D26A6837FDD4

GENERAL PREVAILING WAGE DETERMINATION MADE BY THE DIRECTOR OF INDUSTRIAL RELATIONS
PURSUANT TO CALIFORNIA LABOR CODE PART 7, CHAPTER 1, ARTICLE 2, SECTIONS 1770, 1773 AND 1773.1
FOR COMMERCIAL BUILDING, HIGHWAY, HEAVY CONSTRUCTION AND DREDGING PROJECTS

CRAFT: #CARPENTER AND RELATED TRADES

DETERMINATION: NC-23-31-1-2014-2
ISSUE DATE: August 22, 2014
EXPIRATION DATE OF DETERMINATION: June 30, 2015** The rate to be paid for work performed after this date has been determined. If work will extend past this date, the new rate must be paid and should be incorporated in contracts entered into now. Contact the Office of the Director - Research Unit for specific rates at (415) 703-4774.
LOCALITY: All Localities within Alameda, Alpine, Amador, Butte, Calaveras, Colusa, Contra Costa, Del Norte, El Dorado, Fresno, Glenn, Humboldt, Kings, Lake, Lassen, Madera, Marin, Mariposa, Mendocino, Merced, Modoc, Monterey, Napa, Nevada, Placer, Plumas, Sacramento, San Benito, San Francisco, San Joaquin, San Mateo, Santa Clara, Santa Cruz, Shasta, Sierra, Siskiyou, Solano, Sonoma, Stanislaus, Sutter, Tehama, Trinity, Tulare, Tuolumne, Yolo, and Yuba Counties.

CLASSIFICATION (Journeyperson)	Basic Hourly Rate	Employer Payments: Health and Welfare[c]	Pension	Vacation/ Holiday[d]	Training	Other Payments[e]	Straight – Time: Hours	Total Hourly Rate	Daily: 1 1/2X[f]	Daily: 2X	Overtime Hourly Rate[k] Saturday[a]: 1 1/2X[g]	Saturday: 2X	Sunday and Holiday[j]
[b] Area 1													
Carpenter	$40.35	$11.20	$9.20	$4.15	$0.73	$2.44	8	$68.07	$88.25	$108.42	$88.25	$108.42	$108.42
Hardwood Floorlayer, Power Saw Operator, Saw Filer, Shingler, Steel Scaffold and Steel Shoring Erector	$40.50	$11.20	$9.20	$4.15	$0.73	$2.44	8	$68.22	$88.47	$108.72	$88.47	$108.72	$108.72
[b] Area 2													
Carpenter	$34.47	$11.20	$9.20	$4.15	$0.73	$2.44	8	$62.19	$79.43	$96.66	$79.43	$96.66	$96.66
Hardwood Floorlayer, Power Saw Operator, Saw Filer, Shingler, Steel Scaffold and Steel Shoring Erector	$34.62	$11.20	$9.20	$4.15	$0.73	$2.44	8	$62.34	$79.65	$96.96	$79.65	$96.96	$96.96
[b] Area 3[j]													
Carpenter	$34.47	$11.20	$9.20	$4.15	$0.73	$2.44	8	$62.19	$79.43	$96.66	$79.43	$96.66	$96.66
Hardwood Floorlayer, Power Saw Operator, Saw Filer, Shingler, Steel Scaffold and Steel Shoring Erector	$34.62	$11.20	$9.20	$4.15	$0.73	$2.44	8	$62.34	$79.65	$96.96	$79.65	$96.96	$96.96
[b] Area 4[j]													
Carpenter	$33.12	$11.20	$9.20	$4.15	$0.73	$2.44	8	$60.84	$77.40	$93.96	$77.40	$93.96	$93.96
Hardwood Floorlayer, Power Saw Operator, Saw Filer, Shingler, Steel Scaffold and Steel Shoring Erector	$33.27	$11.20	$9.20	$4.15	$0.73	$2.44	8	$60.99	$77.63	$94.26	$77.63	$94.26	$94.26

DETERMINATION: NC-23-31-1-2014-2A
ISSUE DATE: August 22, 2014
EXPIRATION DATE OF DETERMINATION: June 30, 2015** The rate to be paid for work performed after this date has been determined. If work will extend past this date, the new rate must be paid and should be incorporated in contracts entered into now. Contact the Office of the Director - Research Unit for specific rates at (415) 703-4774.
LOCALITY: All Localities within Alameda, Alpine, Amador, Butte, Calaveras, Colusa, Contra Costa, Del Norte, El Dorado, Fresno, Glenn, Humboldt, Kings, Lake, Lassen, Madera, Marin, Mariposa, Mendocino, Merced, Modoc, Monterey, Napa, Nevada, Placer, Plumas, Sacramento, San Benito, San Francisco, San Joaquin, San Mateo, Santa Clara, Santa Cruz, Shasta, Sierra, Siskiyou, Solano, Sonoma, Stanislaus, Sutter, Tehama, Trinity, Tulare, Tuolumne, Yolo, and Yuba Counties.

CLASSIFICATION (Journeyperson)	Basic Hourly Rate	Employer Payments: Health and Welfare[c]	Pension	Vacation/ Holiday[d]	Training	Other Payments[e]	Straight – Time: Hours	Total Hourly Rate	Daily: 1 1/2X[f]	Daily: 2X	Overtime Hourly Rate[k] Saturday[a]: 1 1/2X[g]	Saturday: 2X	Sunday and Holiday[j]
Bridge Builder/Highway Carpenter	$40.35	$11.20	$9.20	$4.15	$0.73	$2.44	8.0	$68.07	$88.25	$108.42	$88.25	$108.42	$108.42
Bridge Builder/Highway Carpenter (Special Single Shift)	$45.39	$11.20	$9.20	$4.15	$0.73	$2.44	8.0	$73.11	$88.25	$108.42	$88.25	$108.42	$108.42

Footnote and Millwright listed on page 34A

(Recognized Holidays and Subsistence Payment footnotes also listed on page 34A)

DocuSign Envelope ID: 894511EA-295B-49EB-A393-D26A6837FDD4

DETERMINATION: NC-23-31-1-2014-2B
ISSUE DATE: August 22, 2014
EXPIRATION DATE OF DETERMINATION: June 30, 2015** The rate to be paid for work performed after this date has been determined. If work will extend past this date, the new rate must be paid and should be incorporated in contracts entered into now. Contact the Office of the Director - Research Unit for specific rates at (415) 703-4774.
LOCALITY: All Localities within Alameda, Alpine, Amador, Butte, Calaveras, Colusa, Contra Costa, Del Norte, El Dorado, Fresno, Glenn, Humboldt, Kings, Lake, Lassen, Madera, Marin, Mariposa, Mendocino, Merced, Modoc, Monterey, Napa, Nevada, Placer, Plumas, Sacramento, San Benito, San Francisco, San Joaquin, San Mateo, Santa Clara, Santa Cruz, Shasta, Sierra, Siskiyou, Solano, Sonoma, Stanislaus, Sutter, Tehama, Trinity, Tulare, Tuolumne, Yolo, and Yuba Counties.

CLASSIFICATION (Journeyperson)	Basic Hourly Rate	Employer Payments: Health and Welfare[c]	Pension	Vacation/ Holiday[d]	Training	Other Payments[h]	Straight – Time: Hours	Total Hourly Rate	Daily: 1 1/2X[f]	Daily: 2X	Overtime Hourly Rate[k] Saturday[a]: 1 1/2X[g]	Saturday[a]: 2X	Sunday and Holiday[j]
[b] **Area 1**													
Millwright	$40.45	$11.20	$9.20	$4.24	$0.73	$3.95	8	$69.77	$90.00	$110.22	$90.00	$110.22	$110.22
[b] **Area 2**													
Millwright	$36.97	$11.20	$9.20	$4.24	$0.73	$3.95	8	$66.29	$84.78	$103.26	$84.78	$103.26	$103.26
[b] **Area 3**[j]													
Millwright	$36.97	$11.20	$9.20	$4.24	$0.73	$3.95	8	$66.29	$84.78	$103.26	$84.78	$103.26	$103.26
[b] **Area 4**[j]													
Millwright	$35.62	$11.20	$9.20	$4.24	$0.73	$3.95	8	$64.94	$82.75	$100.56	$82.75	$100.56	$100.56

DETERMINATION: NC-23-31-1-2014-2, NC-23-31-1-2014-2A and NC-23-31-1-2014-2B

# Indicates an apprenticeable craft. The current apprentice wage rates are available on the Internet at http://www.dir.ca.gov/OPRL/PWAppWage/PWAppWageStart.asp. To obtain any apprentice wage rates as of July 1, 2008 and prior to September 27, 2012, please contact the Division of Apprenticeship Standards or refer to the Division of Apprenticeship Standards' website at http://www.dir.ca.gov/das/das.html.

[a] In the event that work cannot be performed Monday through Friday because of inclement weather or major mechanical breakdown, employees may voluntarily make up such day on Saturday and shall be paid at the applicable straight time rates.

[b] **AREA 1** - Alameda, Contra Costa, Marin, Napa, San Francisco, San Mateo, Santa Clara, Solano, and Sonoma Counties.
AREA 2 - Monterey, San Benito, and Santa Cruz Counties.
AREA 3 - El Dorado, Placer, Sacramento, San Joaquin and Yolo Counties.
AREA 4 - Alpine, Amador, Butte, Calaveras, Colusa, Del Norte, El Dorado, Fresno, Glenn, Humboldt, Kings, Lake, Lassen, Madera, Mariposa, Mendocino, Merced, Modoc, Nevada, Placer, Plumas, Shasta, Sierra, Siskiyou, Stanislaus, Sutter, Tehama, Trinity, Tulare, Tuolumne, and Yuba Counties.

[c] Includes an amount for UBC Health & Safety Fund and National Apprenticeship fund.

[d] Includes an amount per hour worked for Work Fees. The Vacation amount is $2.45 per hour worked for Carpenter; $2.35 per hour worked for Millwright.

[e] Annuity Trust Fund, Industry Promotion, and Carpenter Employers Contract Administration.

[f] For building construction, rate applies to the first 4 hours daily overtime. For all heavy, highway and engineering construction overtime worked, Monday through Friday, rate applies to the first 4 hours daily overtime.

[g] Rate applies to the first 8 hours for building construction and for the first 10 hours worked on heavy, highway and engineering construction.

[h] Millwright Annuity Trust Fund, Industry Promotion, and Work Preservation.

[i] Time and one-half shall be paid for the first eight (8) hours worked on the four (4) days of each year selected by the Union as designated off/holidays listed in the Holiday Provision.

[j] Area 3 includes the portion of Placer County west of and including Highway 49 and the portion of El Dorado County west of and including Highway 49 and the territory inside the city limits of Placerville. Area 4 includes the portions of Placer and El Dorado Counties not covered in Area 3.

[k] The overtime rates for shift work are based on the non-shift overtime rates.

RECOGNIZED HOLIDAYS: Holidays upon which the general prevailing hourly wage rate for Holiday work shall be paid, shall be all holidays in the collective bargaining agreement, applicable to the particular craft, classification, or type of worker employed on the project, which is on file with the Director of Industrial Relations. If the prevailing rate is not based on a collectively bargained rate, the holidays upon which the prevailing rate shall be paid shall be as provided in Section 6700 of the Government Code. You may obtain the holiday provisions for the current determinations on the Internet at http://www.dir.ca.gov/OPRL/PWD. Holiday provisions for current or superseded determinations may be obtained by contacting the Office of the Director – Research Unit at (415) 703-4774.

TRAVEL AND/OR SUBSISTENCE PAYMENT: In accordance with Labor Code Sections 1773.1 and 1773.9, contractors shall make travel and/or subsistence payments to each worker to execute the work. You may obtain the travel and/or subsistence provisions for the current determinations on the Internet at http://www.dir.ca.gov/OPRL/PWD. Travel and/or subsistence requirements for current or superseded determinations may be obtained by contacting the Office of the Director – Research Unit at (415) 703-4774.

DocuSign Envelope ID: 894511EA-295B-49EB-A393-D26A6837FDD4

GENERAL PREVAILING WAGE DETERMINATION MADE BY THE DIRECTOR OF INDUSTRIAL RELATIONS
PURSUANT TO CALIFORNIA LABOR CODE PART 7, CHAPTER 1, ARTICLE 2, SECTIONS 1770, 1773 AND 1773.1
FOR COMMERCIAL BUILDING, HIGHWAY, HEAVY CONSTRUCTION AND DREDGING PROJECTS

CRAFT: #CARPENTER AND RELATED TRADES (SECOND SHIFT)*

DETERMINATION: NC-23-31-1-2014-2
ISSUE DATE: August 22, 2014

EXPIRATION DATE OF DETERMINATION: June 30, 2015** The rate to be paid for work performed after this date has been determined. If work will extend past this date, the new rate must be paid and should be incorporated in contracts entered into now. Contact the Office of the Director - Research Unit for specific rates at (415) 703-4774.

LOCALITY: All Localities within Alameda, Alpine, Amador, Butte, Calaveras, Colusa, Contra Costa, Del Norte, El Dorado, Fresno, Glenn, Humboldt, Kings, Lake, Lassen, Madera, Marin, Mariposa, Mendocino, Merced, Modoc, Monterey, Napa, Nevada, Placer, Plumas, Sacramento, San Benito, San Francisco, San Joaquin, San Mateo, Santa Clara, Santa Cruz, Shasta, Sierra, Siskiyou, Solano, Sonoma, Stanislaus, Sutter, Tehama, Trinity, Tulare, Tuolumne, Yolo, and Yuba Counties.

CLASSIFICATION (Journeyperson)	Basic Hourly Rate	Employer Payments: Health and Welfare[d]	Pension	Vacation/ Holiday[e]	Training	Other Payments[f]	Straight – Time: Hours[g]	Total Hourly Rate	Overtime Hourly Rate[a]: Daily 1 1/2X[h]	Daily 2X	Saturday[b] 1 1/2X[i]	Saturday[b] 2X	Sunday and Holiday[k]
[c] **Area 1**													
Carpenter	$43.04	$11.20	$9.20	$4.15	$0.73	$2.44	7.5	$70.76	$88.25	$108.42	$88.25	$108.42	$108.42
Hardwood Floorlayer, Power Saw Operator, Saw Filer, Shingler, Steel Scaffold and Steel Shoring Erector	$43.20	$11.20	$9.20	$4.15	$0.73	$2.44	7.5	$70.92	$88.47	$108.72	$88.47	$108.72	$108.72
[c] **Area 2**													
Carpenter	$36.77	$11.20	$9.20	$4.15	$0.73	$2.44	7.5	$64.49	$79.43	$96.66	$79.43	$96.66	$96.66
Hardwood Floorlayer, Power Saw Operator, Saw Filer, Shingler, Steel Scaffold and Steel Shoring Erector	$36.93	$11.20	$9.20	$4.15	$0.73	$2.44	7.5	$64.65	$79.65	$96.96	$79.65	$96.96	$96.96
[c] **Area 3**[l]													
Carpenter	$36.77	$11.20	$9.20	$4.15	$0.73	$2.44	7.5	$64.49	$79.43	$96.66	$79.43	$96.66	$96.66
Hardwood Floorlayer, Power Saw Operator, Saw Filer, Shingler, Steel Scaffold and Steel Shoring Erector	$36.93	$11.20	$9.20	$4.15	$0.73	$2.44	7.5	$64.65	$79.65	$96.96	$79.65	$96.96	$96.96
[c] **Area 4**[l]													
Carpenter	$35.33	$11.20	$9.20	$4.15	$0.73	$2.44	7.5	$63.05	$77.40	$93.96	$77.40	$93.96	$93.96
Hardwood Floorlayer, Power Saw Operator, Saw Filer, Shingler, Steel Scaffold and Steel Shoring Erector	$35.49	$11.20	$9.20	$4.15	$0.73	$2.44	7.5	$63.21	$77.63	$94.26	$77.63	$94.26	$94.26

DETERMINATION: NC-23-31-1-2014-2A
ISSUE DATE: August 22, 2014

EXPIRATION DATE OF DETERMINATION: June 30, 2015** The rate to be paid for work performed after this date has been determined. If work will extend past this date, the new rate must be paid and should be incorporated in contracts entered into now. Contact the Office of the Director - Research Unit for specific rates at (415) 703-4774.

LOCALITY: All Localities within Alameda, Alpine, Amador, Butte, Calaveras, Colusa, Contra Costa, Del Norte, El Dorado, Fresno, Glenn, Humboldt, Kings, Lake, Lassen, Madera, Marin, Mariposa, Mendocino, Merced, Modoc, Monterey, Napa, Nevada, Placer, Plumas, Sacramento, San Benito, San Francisco, San Joaquin, San Mateo, Santa Clara, Santa Cruz, Shasta, Sierra, Siskiyou, Solano, Sonoma, Stanislaus, Sutter, Tehama, Trinity, Tulare, Tuolumne, Yolo, and Yuba Counties.

CLASSIFICATION (Journeyperson)	Basic Hourly Rate	Employer Payments: Health and Welfare[d]	Pension	Vacation/ Holiday[e]	Training	Other Payments[f]	Straight – Time: Hours[g]	Total Hourly Rate	Overtime Hourly Rate[a]: Daily 1 1/2X[h]	Daily 2X	Saturday[b] 1 1/2X[i]	Saturday[b] 2X	Sunday and Holiday[k]
Bridge Builder/Highway Carpenter	$43.04	$11.20	$9.20	$4.15	$0.73	$2.44	7.5	$70.76	$88.25	$108.42	$88.25	$108.42	$108.42

Continued on page 34C

(Recognized Holidays and Subsistence Payment footnotes also listed on page 34C)

DocuSign Envelope ID: 894511EA-295B-49EB-A393-D26A6837FDD4

DETERMINATION: NC-23-31-1-2014-2B
ISSUE DATE: August 22, 2014

EXPIRATION DATE OF DETERMINATION: June 30, 2015** The rate to be paid for work performed after this date has been determined. If work will extend past this date, the new rate must be paid and should be incorporated in contracts entered into now. Contact the Office of the Director - Research Unit for specific rates at (415) 703-4774.

LOCALITY: All Localities within Alameda, Alpine, Amador, Butte, Calaveras, Colusa, Contra Costa, Del Norte, El Dorado, Fresno, Glenn, Humboldt, Kings, Lake, Lassen, Madera, Marin, Mariposa, Mendocino, Merced, Modoc, Monterey, Napa, Nevada, Placer, Plumas, Sacramento, San Benito, San Francisco, San Joaquin, San Mateo, Santa Clara, Santa Cruz, Shasta, Sierra, Siskiyou, Solano, Sonoma, Stanislaus, Sutter, Tehama, Trinity, Tulare, Tuolumne, Yolo, and Yuba Counties.

CLASSIFICATION (Journeyperson)	Basic Hourly Rate	Employer Payments: Health and Welfare[d]	Pension	Vacation/ Holiday[e]	Training	Other Payments[j]	Straight – Time: Hours[g]	Total Hourly Rate	Overtime Hourly Rate[a]: Daily 1 1/2X[h]	Daily 2X	Saturday[b] 1 1/2X[i]	Saturday[b] 2X	Sunday and Holiday[k]
[c] **Area 1**													
Millwright	$43.15	$11.20	$9.20	$4.24	$0.73	$3.95	7.5	$72.47	$90.00	$110.22	$90.00	$110.22	$110.22
[c] **Area 2**													
Millwright	$39.43	$11.20	$9.20	$4.24	$0.73	$3.95	7.5	$68.75	$84.78	$103.26	$84.78	$103.26	$103.26
[c] **Area 3**[l]													
Millwright	$39.43	$11.20	$9.20	$4.24	$0.73	$3.95	7.5	$68.75	$84.78	$103.26	$84.78	$103.26	$103.26
[c] **Area 4**[l]													
Millwright	$37.99	$11.20	$9.20	$4.24	$0.73	$3.95	7.5	$67.31	$82.75	$100.56	$82.75	$100.56	$100.56

DETERMINATION: NC-23-31-1-2014-2, NC-23-31-1-2014-2A and NC-23-31-1-2014-2B (FOR SECOND AND THIRD SHIFTS)

# Indicates an apprenticeable craft. The current apprentice wage rates are available on the Internet at http://www.dir.ca.gov/OPRL/PWAppWage/PWAppWageStart.asp. To obtain any apprentice wage rates as of July 1, 2008 and prior to September 27, 2012, please contact the Division of Apprenticeship Standards or refer to the Division of Apprenticeship Standards' website at http://www.dir.ca.gov/das/das.html.

* Does not apply to tenant improvement or renovation projects in occupied buildings with a total contract value of $5 million or less.

[a] The overtime rates for shift work are based on the non-shift overtime rates on page 34.

[b] In the event that work cannot be performed Monday through Friday because of inclement weather or major mechanical breakdown, employees may voluntarily make up such day on Saturday and shall be paid at the applicable straight time rates.

[c] **AREA 1** - Alameda, Contra Costa, Marin, Napa, San Francisco, San Mateo, Santa Clara, Solano, and Sonoma Counties.
AREA 2 - Monterey, San Benito, and Santa Cruz Counties.
AREA 3 - El Dorado, Placer, Sacramento, San Joaquin and Yolo Counties.
AREA 4 - Alpine, Amador, Butte, Calaveras, Colusa, Del Norte, El Dorado, Fresno, Glenn, Humboldt, Kings, Lake, Lassen, Madera, Mariposa, Mendocino, Merced, Modoc, Nevada, Placer, Plumas, Shasta, Sierra, Siskiyou, Stanislaus, Sutter, Tehama, Trinity, Tulare, Tuolumne, and Yuba Counties.

[d] Includes an amount for UBC Health & Safety Fund and National Apprenticeship fund.

[e] Includes an amount per hour worked for Work Fees. The Vacation amount is $2.45 per hour worked for Carpenter; $2.35 per hour worked for Millwright.

[f] Annuity Trust Fund, Industry Promotion, and Carpenter Employers Contract Administration.

[g] Daily overtime applies after 7 ½ hours worked at the straight-time rate for second shift and after 7 hours worked at the straight-time rate for third shift.

[h] For building construction, rate applies to the first 2 hours prior to the start of the regular or approved day, or the first 4 hours after the end of the approved or regular work day, not to exceed a total of 4 hours in any 1 work day. For heavy, highway and engineering construction rate applies to the first 4 hours prior to the start of the regular or approved day, or the first 4 hours after the end of the approved or regular work day, not to exceed a total of 4 hours in any 1 work day

[i] Rate applies to the first 8 hours for building construction and for the first 10 hours worked on heavy, highway and engineering construction.

[j] Millwright Annuity Trust Fund, Industry Promotion, and Work Preservation.

[k] Time and one-half shall be paid for the first eight (8) hours worked on the four (4) days of each year selected by the Union as designated off/holidays listed in the Holiday Provision.

[l] Area 3 includes the portion of Placer County west of and including Highway 49 and the portion of El Dorado County west of and including Highway 49 and the territory inside the city limits of Placerville. Area 4 includes the portions of Placer and El Dorado Counties not covered in Area 3.

RECOGNIZED HOLIDAYS: Holidays upon which the general prevailing hourly wage rate for Holiday work shall be paid, shall be all holidays in the collective bargaining agreement, applicable to the particular craft, classification, or type of worker employed on the project, which is on file with the Director of Industrial Relations. If the prevailing rate is not based on a collectively bargained rate, the holidays upon which the prevailing rate shall be paid shall be as provided in Section 6700 of the Government Code. You may obtain the holiday provisions for the current determinations on the Internet at http://www.dir.ca.gov/OPRL/PWD. Holiday provisions for current or superseded determinations may be obtained by contacting the Office of the Director – Research Unit at (415) 703-4774.

TRAVEL AND/OR SUBSISTENCE PAYMENT: In accordance with Labor Code Sections 1773.1 and 1773.9, contractors shall make travel and/or subsistence payments to each worker to execute the work. You may obtain the travel and/or subsistence provisions for the current determinations on the Internet at http://www.dir.ca.gov/OPRL/PWD. Travel and/or subsistence requirements for current or superseded determinations may be obtained by contacting the Office of the Director – Research Unit at (415) 703-4774.

DocuSign Envelope ID: 894511EA-295B-49EB-A393-D26A6837FDD4

GENERAL PREVAILING WAGE DETERMINATION MADE BY THE DIRECTOR OF INDUSTRIAL RELATIONS
PURSUANT TO CALIFORNIA LABOR CODE PART 7, CHAPTER 1, ARTICLE 2, SECTIONS 1770, 1773 AND 1773.1
FOR COMMERCIAL BUILDING, HIGHWAY, HEAVY CONSTRUCTION AND DREDGING PROJECTS

CRAFT: #CARPENTER AND RELATED TRADES (THIRD SHIFT)*

DETERMINATION: NC-23-31-1-2014-2
ISSUE DATE: August 22, 2014
EXPIRATION DATE OF DETERMINATION: June 30, 2015** The rate to be paid for work performed after this date has been determined. If work will extend past this date, the new rate must be paid and should be incorporated in contracts entered into now. Contact the Office of the Director - Research Unit for specific rates at (415) 703-4774.

LOCALITY: All Localities within Alameda, Alpine, Amador, Butte, Calaveras, Colusa, Contra Costa, Del Norte, El Dorado, Fresno, Glenn, Humboldt, Kings, Lake, Lassen, Madera, Marin, Mariposa, Mendocino, Merced, Modoc, Monterey, Napa, Nevada, Placer, Plumas, Sacramento, San Benito, San Francisco, San Joaquin, San Mateo, Santa Clara, Santa Cruz, Shasta, Sierra, Siskiyou, Solano, Sonoma, Stanislaus, Sutter, Tehama, Trinity, Tulare, Tuolumne, Yolo, and Yuba Counties.

CLASSIFICATION (Journeyperson)	Basic Hourly Rate	Employer Payments: Health and Welfare[d]	Pension	Vacation/ Holiday[e]	Training	Other Payments[f]	Straight – Time: Hours[g]	Total Hourly Rate	Daily: 1 1/2X[h]	Daily: 2X	Saturday[b]: 1 1/2X[i]	Saturday[b]: 2X	Sunday and Holiday[k]
[c] Area 1													
Carpenter	$46.11	$11.20	$9.20	$4.15	$0.73	$2.44	7	$73.83	$88.25	$108.42	$88.25	$108.42	$108.42
Hardwood Floorlayer, Power Saw Operator, Saw Filer, Shingler, Steel Scaffold and Steel Shoring Erector	$46.29	$11.20	$9.20	$4.15	$0.73	$2.44	7	$74.01	$88.47	$108.72	$88.47	$108.72	$108.72
[c] Area 2													
Carpenter	$39.39	$11.20	$9.20	$4.15	$0.73	$2.44	7	$67.11	$79.43	$96.66	$79.43	$96.66	$96.66
Hardwood Floorlayer, Power Saw Operator, Saw Filer, Shingler, Steel Scaffold and Steel Shoring Erector	$39.57	$11.20	$9.20	$4.15	$0.73	$2.44	7	$67.29	$79.65	$96.96	$79.65	$96.96	$96.96
[c] Area 3[l]													
Carpenter	$39.39	$11.20	$9.20	$4.15	$0.73	$2.44	7	$67.11	$79.43	$96.66	$79.43	$96.66	$96.66
Hardwood Floorlayer, Power Saw Operator, Saw Filer, Shingler, Steel Scaffold and Steel Shoring Erector	$39.57	$11.20	$9.20	$4.15	$0.73	$2.44	7	$67.29	$79.65	$96.96	$79.65	$96.96	$96.96
[c] Area 4[l]													
Carpenter	$37.85	$11.20	$9.20	$4.15	$0.73	$2.44	7	$65.57	$77.40	$93.96	$77.40	$93.96	$93.96
Hardwood Floorlayer, Power Saw Operator, Saw Filer, Shingler, Steel Scaffold and Steel Shoring Erector	$38.02	$11.20	$9.20	$4.15	$0.73	$2.44	7	$65.74	$77.63	$94.26	$77.63	$94.26	$94.26

Footnotes listed on page 34C

(Recognized Holidays and Subsistence Payment footnotes also listed on page 34C)

DocuSign Envelope ID: 894511EA-295B-49EB-A393-D26A6837FDD4

DETERMINATION: NC-23-31-1-2014-2A
ISSUE DATE: August 22, 2014
EXPIRATION DATE OF DETERMINATION: June 30, 2015** The rate to be paid for work performed after this date has been determined. If work will extend past this date, the new rate must be paid and should be incorporated in contracts entered into now. Contact the Office of the Director - Research Unit for specific rates at (415) 703-4774.

LOCALITY: All Localities within Alameda, Alpine, Amador, Butte, Calaveras, Colusa, Contra Costa, Del Norte, El Dorado, Fresno, Glenn, Humboldt, Kings, Lake, Lassen, Madera, Marin, Mariposa, Mendocino, Merced, Modoc, Monterey, Napa, Nevada, Placer, Plumas, Sacramento, San Benito, San Francisco, San Joaquin, San Mateo, Santa Clara, Santa Cruz, Shasta, Sierra, Siskiyou, Solano, Sonoma, Stanislaus, Sutter, Tehama, Trinity, Tulare, Tuolumne, Yolo, and Yuba Counties.

CLASSIFICATION (Journeyperson)	Basic Hourly Rate	Employer Payments: Health and Welfare[d]	Pension	Vacation/ Holiday[e]	Training	Other Payments[f]	Straight – Time: Hours[g]	Total Hourly Rate	Daily: 1 1/2X[h]	Daily: 2X	Saturday[b]: 1 1/2X[i]	Saturday[b]: 2X	Sunday and Holiday[k]
Bridge Builder/Highway Carpenter	$46.11	$11.20	$9.20	$4.15	$0.73	$2.44	7	$73.83	$88.25	$108.42	$88.25	$108.42	$108.42

DETERMINATION: NC-23-31-1-2014-2B
ISSUE DATE: August 22, 2014
EXPIRATION DATE OF DETERMINATION: June 30, 2015** The rate to be paid for work performed after this date has been determined. If work will extend past this date, the new rate must be paid and should be incorporated in contracts entered into now. Contact the Office of the Director - Research Unit for specific rates at (415) 703-4774.

LOCALITY: All Localities within Alameda, Alpine, Amador, Butte, Calaveras, Colusa, Contra Costa, Del Norte, El Dorado, Fresno, Glenn, Humboldt, Kings, Lake, Lassen, Madera, Marin, Mariposa, Mendocino, Merced, Modoc, Monterey, Napa, Nevada, Placer, Plumas, Sacramento, San Benito, San Francisco, San Joaquin, San Mateo, Santa Clara, Santa Cruz, Shasta, Sierra, Siskiyou, Solano, Sonoma, Stanislaus, Sutter, Tehama, Trinity, Tulare, Tuolumne, Yolo, and Yuba Counties.

CLASSIFICATION (Journeyperson)	Basic Hourly Rate	Employer Payments: Health and Welfare[d]	Pension	Vacation/ Holiday[e]	Training	Other Payments[j]	Straight – Time: Hours[g]	Total Hourly Rate	Daily: 1 1/2X[h]	Daily: 2X	Saturday[b]: 1 1/2X[i]	Saturday[b]: 2X	Sunday and Holiday[k]
[c] **Area 1**													
Millwright	$46.23	$11.20	$9.20	$4.24	$0.73	$3.95	7	$75.55	$90.00	$110.22	$90.00	$110.22	$110.22
[c] **Area 2**													
Millwright	$42.25	$11.20	$9.20	$4.24	$0.73	$3.95	7	$71.57	$84.78	$103.26	$84.78	$103.26	$103.26
[c] **Area 3**[l]													
Millwright	$42.25	$11.20	$9.20	$4.24	$0.73	$3.95	7	$71.57	$84.78	$103.26	$84.78	$103.26	$103.26
[c] **Area 4**[l]													
Millwright	$40.71	$11.20	$9.20	$4.24	$0.73	$3.95	7	$70.03	$82.75	$100.56	$82.75	$100.56	$100.56

Footnotes listed on page 34C

(Recognized Holidays and Subsistence Payment footnotes also listed on page 34C)

DocuSign Envelope ID: 894511EA-295B-49EB-A393-D26A6837FDD4

STATE OF CALIFORNIA Edmund G. Brown, Jr., *Governor*

DEPARTMENT OF INDUSTRIAL RELATIONS
Office of the Director – Research Unit
455 Golden Gate Avenue, 9th Floor
San Francisco, CA 94102

MAILING ADDRESS:
P. O. Box 420603
San Francisco, CA 94142-0603

PREDETERMINED INCREASE FOR

CARPENTER AND RELATED TRADES (NC-23-31-1-2014-2) ALL AREAS AND ALL SHIFTS

IN ALAMEDA, ALPINE, AMADOR, BUTTE, CALAVERAS, COLUSA, CONTRA COSTA, DEL NORTE, EL DORADO, FRESNO, GLENN, HUMBOLDT, KINGS, LAKE, LASSEN, MADERA, MARIN, MARIPOSA, MENDOCINO, MERCED, MODOC, MONTEREY, NAPA, NEVADA, PLACER, PLUMAS, SACRAMENTO, SAN BENITO, SAN FRANCISCO, SAN JOAQUIN, SAN MATEO, SANTA CLARA, SANTA CRUZ, SHASTA, SIERRA, SISKIYOU, SOLANO, SONOMA, STANISLAUS, SUTTER, TEHAMA, TRINITY, TULARE, TUOLUMNE, YOLO AND YUBA COUNTIES

This predetermined increase for the above named craft applies only to the current determination for work being performed on public works projects with bid advertisement dates ***on or after September 1, 2014***, until this determination is superseded by a new determination or a predetermined increase modification notice becomes effective.

When referencing our prevailing wage determinations, please note that if the prevailing wage rate determination which was in effect on the bid advertisement date of a project has a single asterisk (*) after the expiration date, the rate will be good for the life of the project. However, if a prevailing wage rate determination has double asterisks (**) after the expiration date, the rate must be updated on the following date to reflect the predetermined rate change(s).

CARPENTER (Except Millwright and Bridge Builder): All Areas and All Shifts

Determination NC-23-31-1-2014-2 is currently in effect and expires on June 30, 2015**. The predetermined increases applicable to Determination NC-23-31-1-2014-2 are as follows:

Effective July 1, 2015, there will be an increase of $2.31 to be allocated to wages and/or fringes.

Effective July 1, 2016, there will be an increase of $2.41 to be allocated to wages and/or fringes.

Effective July 1, 2017, there will be an increase of $2.51 to be allocated to wages and/or fringes.

Effective July 1, 2018, there will be an increase of $2.61 to be allocated to wages and/or fringes.

There will be no further increases applicable to this determination.

Issued 8/22/14, Effective for projects advertised for bids on or after 9/1/2014.

This page will be updated when wage rate breakdown information becomes available.
Last Updated: September 1, 2014

DocuSign Envelope ID: 894511EA-295B-49EB-A393-D26A6837FDD4

STATE OF CALIFORNIA Edmund G. Brown, Jr., *Governor*

DEPARTMENT OF INDUSTRIAL RELATIONS
Office of the Director – Research Unit
455 Golden Gate Avenue, 9th Floor
San Francisco, CA 94102

MAILING ADDRESS:
P. O. Box 420603
San Francisco, CA 94142-0603

PREDETERMINED INCREASE FOR

CARPENTER AND RELATED TRADES (NC-23-31-1-2014-2A)
BRIDGE BUILDER/HIGHWAY CARPENTER (ALL AREAS AND ALL SHIFTS)

IN ALAMEDA, ALPINE, AMADOR, BUTTE, CALAVERAS, COLUSA, CONTRA COSTA, DEL NORTE, EL DORADO, FRESNO, GLENN, HUMBOLDT, KINGS, LAKE, LASSEN, MADERA, MARIN, MARIPOSA, MENDOCINO, MERCED, MODOC, MONTEREY, NAPA, NEVADA, PLACER, PLUMAS, SACRAMENTO, SAN BENITO, SAN FRANCISCO, SAN JOAQUIN, SAN MATEO, SANTA CLARA, SANTA CRUZ, SHASTA, SIERRA, SISKIYOU, SOLANO, SONOMA, STANISLAUS, SUTTER, TEHAMA, TRINITY, TULARE, TUOLUMNE, YOLO AND YUBA COUNTIES

This predetermined increase for the above named craft applies only to the above referenced determination for work being performed on public works projects with bid advertisement dates ***on or after September 1, 2014***, until this determination is superseded by a new determination or a predetermined increase modification notice becomes effective.

When referencing our prevailing wage determinations, please note that if the prevailing wage rate determination which was in effect on the bid advertisement date of a project has a single asterisk (*) after the expiration date, the rate will be good for the life of the project. However, if a prevailing wage rate determination has double asterisks (**) after the expiration date, the rate must be updated on the following date to reflect the predetermined rate change(s).

BRIDGE BUILDER/HIGHWAY CARPENTER (All Areas and All Shifts):
Determination NC-23-31-1-2014-2A is currently in effect and expires on June 30, 2015**. The predetermined increases applicable to Determination NC-23-31-1-2014-2A are as follows:

Effective July 1, 2015, there will be an increase of $2.31 to be allocated to wages and/or fringes.

Effective July 1, 2016, there will be an increase of $2.41 to be allocated to wages and/or fringes.

Effective July 1, 2017, there will be an increase of $2.51 to be allocated to wages and/or fringes.

Effective July 1, 2018, there will be an increase of $2.61 to be allocated to wages and/or fringes.

There will be no further increases applicable to this determination.

Issued 8/22/14, Effective for projects advertised for bids on or after 9/1/2014.

This page will be updated when wage rate breakdown information becomes available.
Last Updated: September 1, 2014

DocuSign Envelope ID: 894511EA-295B-49EB-A393-D26A6837FDD4

STATE OF CALIFORNIA Edmund G. Brown, Jr., *Governor*

DEPARTMENT OF INDUSTRIAL RELATIONS
Office of the Director – Research Unit
455 Golden Gate Avenue, 9th Floor
San Francisco, CA 94102

MAILING ADDRESS:
P. O. Box 420603
San Francisco, CA 94142-0603

PREDETERMINED INCREASE FOR

CARPENTER AND RELATED TRADES (NC-23-31-1-2014-2B) MILLWRIGHT (ALL AREAS AND ALL SHIFTS)

IN ALAMEDA, ALPINE, AMADOR, BUTTE, CALAVERAS, COLUSA, CONTRA COSTA, DEL NORTE, EL DORADO, FRESNO, GLENN, HUMBOLDT, KINGS, LAKE, LASSEN, MADERA, MARIN, MARIPOSA, MENDOCINO, MERCED, MODOC, MONTEREY, NAPA, NEVADA, PLACER, PLUMAS, SACRAMENTO, SAN BENITO, SAN FRANCISCO, SAN JOAQUIN, SAN MATEO, SANTA CLARA, SANTA CRUZ, SHASTA, SIERRA, SISKIYOU, SOLANO, SONOMA, STANISLAUS, SUTTER, TEHAMA, TRINITY, TULARE, TUOLUMNE, YOLO AND YUBA COUNTIES

This predetermined increase for the above named craft applies only to the above referenced determination for work being performed on public works projects with bid advertisement dates ***on or after September 1, 2014***, until this determination is superseded by a new determination or a predetermined increase modification notice becomes effective.

When referencing our prevailing wage determinations, please note that if the prevailing wage rate determination which was in effect on the bid advertisement date of a project has a single asterisk (*) after the expiration date, the rate will be good for the life of the project. However, if a prevailing wage rate determination has double asterisks (**) after the expiration date, the rate must be updated on the following date to reflect the predetermined rate change(s).

MILLWRIGHT (All Areas and All Shifts):
Determination NC-23-31-1-2014-2B is currently in effect and expires on June 30, 2015**. The predetermined increases applicable to Determination NC-23-31-1-2014-2B are as follows:

Effective July 1, 2015, there will be an increase of $2.31 to be allocated to wages and/or fringes.

Effective July 1, 2016, there will be an increase of $2.41 to be allocated to wages and/or fringes.

Effective July 1, 2017, there will be an increase of $2.51 to be allocated to wages and/or fringes.

Effective July 1, 2018, there will be an increase of $2.61 to be allocated to wages and/or fringes.

There will be no further increases applicable to this determination.

Issued 8/22/14, Effective for projects advertised for bids on or after 9/1/2014.

This page will be updated when the wage rate breakdown information becomes available.
Last Updated: September 1, 2014

DocuSign Envelope ID: 894511EA-295B-49EB-A393-D26A6837FDD4

GENERAL PREVAILING WAGE DETERMINATION MADE BY THE DIRECTOR OF INDUSTRIAL RELATIONS PURSUANT TO CALIFORNIA LABOR CODE PART 7, CHAPTER 1, ARTICLE 2, SECTIONS 1770, 1773 AND 1773.1

FOR COMMERCIAL BUILDING, HIGHWAY, HEAVY CONSTRUCTION AND DREDGING PROJECTS

CRAFT: # CEMENT MASON

DETERMINATION: NC-23-203-1-2014-2
ISSUE DATE: August 22, 2014
EXPIRATION DATE OF DETERMINATION: June 28, 2015** The rate to be paid for work performed after this date has been determined. If work will extend past this date, the new rate must be paid and should be incorporated in contracts entered into now. Contact the Office of the Director – Research Unit for specific rates at (415) 703-4774.

LOCALITY: All localities within Alameda, Alpine, Amador, Butte, Calaveras, Colusa, Contra Costa, Del Norte, El Dorado, Fresno, Glenn, Humboldt, Kings, Lake, Lassen, Madera, Marin, Mariposa, Mendocino, Merced, Modoc, Monterey, Napa, Nevada, Placer, Plumas, Sacramento, San Benito, San Francisco, San Joaquin, San Mateo, Santa Clara, Santa Cruz, Shasta, Sierra, Siskiyou, Solano, Sonoma, Stanislaus, Sutter, Tehama, Trinity, Tulare, Tuolumne, Yolo, and Yuba counties.

		Employer Payments				Straight-Time		Overtime Hourly Rate		
CLASSIFICATION (JOURNEYPERSON)	Basic Hourly Rate	Health and Welfare	Pension	Vacation and Holiday	Training	Hours[d]	Total Hourly Rate	Daily 1 1/2X	Saturday[a] 1 1/2X	Sunday and Holiday
Cement Mason	$30.00	8.15	9.80	5.24[b]	0.47	8	53.66	68.660	68.660[c]	83.66
Mastic Magnesite Gypsum, Epoxy, Polyester, Resin and all composition masons, swing or slip form scaffolds	$30.75	8.15	9.80	5.24[b]	0.47	8	54.41	69.785	69.785[c]	85.16

# Indicates an apprenticeable craft. The current apprentice wage rates are available on the Internet @ http://www.dir.ca.gov/OPRL/PWAppWage/PWAppWageStart.asp. To obtain any apprentice wage rates as of July 1, 2008 and prior to September 27, 2012, please contact the Division of Apprenticeship Standards or refer to the Division of Apprenticeship Standards' website at http://www.dir.ca.gov/das/das.html.

[a] Saturdays in the same work week may be worked at straight time if a job is shut down during the normal work week due to inclement weather or major mechanical breakdown (limited to curb and gutter machine, concrete pump, and concrete plant).

[b] Includes an amount for supplemental dues.

[c] Rate applies to the first 8 hours of work on Saturday. All other hours worked on Saturday are paid at the Sunday/Holiday rate.

[d] Where multiple shifts are worked, the day shift shall work eight (8) hours and for such work they shall be paid the regular straight time rate for eight (8) hours; the second (2nd) shift shall work seven and one-half (7 ½) hours, and for such work they shall be paid the regular straight time rate for eight (8) hours; if a third (3rd) shift is worked, they shall work seven (7) hours and for such work they shall be paid eight (8) hours regular straight time pay. No multiple shift shall be started for less than five (5) consecutive days.

RECOGNIZED HOLIDAYS: Holidays upon which the general prevailing hourly wage rate for Holiday work shall be paid, shall be all holidays in the collective bargaining agreement, applicable to the particular craft, classification, or type of worker employed on the project, which is on file with the Director of Industrial Relations. If the prevailing rate is not based on a collectively bargained rate, the holidays upon which the prevailing rate shall be paid shall be as provided in Section 6700 of the Government Code. You may obtain the holiday provisions for the current determinations on the Internet at http://www.dir.ca.gov/OPRL/PWD. Holiday provisions for current or superseded determinations may be obtained by contacting the Office of the Director – Research Unit at (415) 703-4774.

TRAVEL AND/OR SUBSISTENCE PAYMENT: In accordance with Labor Code Sections 1773.1 and 1773.9, contractors shall make travel and/or subsistence payments to each worker to execute the work. You may obtain the travel and/or subsistence provisions for the current determinations on the Internet at http://www.dir.ca.gov/OPRL/PWD. Travel and/or subsistence requirements for current or superseded determinations may be obtained by contacting the Office of the Director – Research Unit at (415) 703-4774.

DocuSign Envelope ID: 894511EA-295B-49EB-A393-D26A6837FDD4

GENERAL PREVAILING WAGE DETERMINATION MADE BY THE DIRECTOR OF INDUSTRIAL RELATIONS
PURSUANT TO CALIFORNIA LABOR CODE PART 7, CHAPTER 1, ARTICLE 2, SECTIONS 1770, 1773 AND 1773.1

FOR COMMERCIAL BUILDING, HIGHWAY, HEAVY CONSTRUCTION AND DREDGING PROJECTS

CRAFT: # CEMENT MASON (SPECIAL SINGLE SHIFT)

DETERMINATION: NC-23-203-1A-2014-2
ISSUE DATE: August 22, 2014
EXPIRATION DATE OF DETERMINATION: June 28, 2015** The rate to be paid for work performed after this date has been determined. If work will extend past this date, the new rate must be paid and should be incorporated in contracts entered into now. Contact the Office of the Director – Research Unit for specific rates at (415) 703-4774.

LOCALITY: All localities within Alameda, Alpine, Amador, Butte, Calaveras, Colusa, Contra Costa, Del Norte, El Dorado, Fresno, Glenn, Humboldt, Kings, Lake, Lassen, Madera, Marin, Mariposa, Mendocino, Merced, Modoc, Monterey, Napa, Nevada, Placer, Plumas, Sacramento, San Benito, San Francisco, San Joaquin, San Mateo, Santa Clara, Santa Cruz, Shasta, Sierra, Siskiyou, Solano, Sonoma, Stanislaus, Sutter, Tehama, Trinity, Tulare, Tuolumne, Yolo, and Yuba counties.

		Employer Payments				Straight-Time		Overtime Hourly Rate		
CLASSIFICATION (JOURNEYPERSON)	Basic Hourly Rate	Health and Welfare	Pension	Vacation and Holiday	Training	Hours	Total Hourly Rate	Daily 1 1/2X	Saturday[a] 1 1/2X	Sunday and Holiday
Cement Mason	$33.00	8.15	9.80	5.24[b]	0.47	8	56.66	71.66	71.66[c]	86.66
Mastic Magnesite Gypsum, Epoxy, Polyester, Resin and all composition masons, swing or slip form scaffolds	$33.75	8.15	9.80	5.24[b]	0.47	8	57.41	72.785	72.785[c]	88.16

# Indicates an apprenticeable craft. The current apprentice wage rates are available on the Internet @ http://www.dir.ca.gov/OPRL/PWAppWage/PWAppWageStart.asp. To obtain any apprentice wage rates as of July 1, 2008 and prior to September 27, 2012, please contact the Division of Apprenticeship Standards or refer to the Division of Apprenticeship Standards' website at http://www.dir.ca.gov/das/das.html.

[a] Saturdays in the same work week may be worked at straight time if a job is shut down during the normal work week due to inclement weather or major mechanical breakdown (limited to curb and gutter machine, concrete pump, and concrete plant).
[b] Includes an amount for supplemental dues.
[c] Rate applies to the first 8 hours of work on Saturday. All other hours worked on Saturday are paid at the Sunday/Holiday rate.

RECOGNIZED HOLIDAYS: Holidays upon which the general prevailing hourly wage rate for Holiday work shall be paid, shall be all holidays in the collective bargaining agreement, applicable to the particular craft, classification, or type of worker employed on the project, which is on file with the Director of Industrial Relations. If the prevailing rate is not based on a collectively bargained rate, the holidays upon which the prevailing rate shall be paid shall be as provided in Section 6700 of the Government Code. You may obtain the holiday provisions for the current determinations on the Internet at http://www.dir.ca.gov/OPRL/PWD. Holiday provisions for current or superseded determinations may be obtained by contacting the Office of the Director – Research Unit at (415) 703-4774.

TRAVEL AND/OR SUBSISTENCE PAYMENT: In accordance with Labor Code Sections 1773.1 and 1773.9, contractors shall make travel and/or subsistence payments to each worker to execute the work. You may obtain the travel and/or subsistence provisions for the current determinations on the Internet at http://www.dir.ca.gov/OPRL/PWD. Travel and/or subsistence requirements for current or superseded determinations may be obtained by contacting the Office of the Director – Research Unit at (415) 703-4774.

DocuSign Envelope ID: 894511EA-295B-49EB-A393-D26A6837FDD4

STATE OF CALIFORNIA Edmund G. Brown Jr., *Governor*

DEPARTMENT OF INDUSTRIAL RELATIONS
Office of the Director – Research Unit
455 Golden Gate Avenue, 9th Floor
San Francisco, CA 94102

MAILING ADDRESS:
P. O. Box 420603
San Francisco, CA 94142-0603

PREDETERMINED INCREASES FOR

CEMENT MASON (NC-23-203-1-2014-2)

CEMENT MASON (SPECIAL SINGLE SHIFT) (NC-23-203-1A-2014-2)

IN ALAMEDA, ALPINE, AMADOR, BUTTE, CALAVERAS, COLUSA, CONTRA COSTA, DEL NORTE, EL DORADO, FRESNO, GLENN, HUMBOLDT, KINGS, LAKE, LASSEN, MADERA, MARIN, MARIPOSA, MENDOCINO, MERCED, MODOC, MONTEREY, NAPA, NEVADA, PLACER, PLUMAS, SACRAMENTO, SAN BENITO, SAN FRANCISCO, SAN JOAQUIN, SAN MATEO, SANTA CLARA, SANTA CRUZ, SHASTA, SIERRA, SISKIYOU, SOLANO, SONOMA, STANISLAUS, SUTTER, TEHAMA, TRINITY, TULARE, TUOLUMNE, YOLO, AND YUBA COUNTIES

This predetermined increase for the above named craft applies only to the current determination for work being performed on public works projects with bid advertisement dates on or after **September 1, 2014**, until this determination is superseded by a new determination or a predetermined increase modification notice becomes effective.

When referencing our prevailing wage determinations, please note that if the prevailing wage rate determination which was in effect on the bid advertisement date of a project has a single asterisk (*) after the expiration date, the rate will be good for the life of the project. However, if a prevailing wage rate determination has double asterisks (**) after the expiration date, the rate must be updated on the following date to reflect the predetermined rate change(s).

CEMENT MASON: All Classifications

Determination NC-23-203-1-2014-2 and NC-23-203-1A-2014-2 are currently in effect and expire on June 28, 2015**.

Effective June 29, 2015, there will be an increase of $1.70: $0.50 to Pension, $1.20 to be allocated to wages and/or employer payments.

There will be no further increases applicable to this determination.

Issued 8/22/2014, Effective 9/1/2014 until superseded.

This page will be updated when wage rate breakdown information becomes available.
Last Updated: September 1, 2014

DocuSign Envelope ID: 894511EA-295B-49EB-A393-D26A6837FDD4

CRAFT: #BUILDING/CONSTRUCTION INSPECTOR AND FIELD SOILS AND MATERIAL TESTER

DETERMINATION: NC-63-3-9-2014-1
ISSUE DATE: August 22, 2014
EXPIRATION DATE OF DETERMINATION: June 30, 2015* Effective until superseded by a new determination issued by the Director of Industrial Relations. Contact the Office of the Director – Research Unit at (415) 703-4774 for the new rates after ten days after the expiration date if no subsequent determination is issued.

LOCALITY: All localities within Alameda, Alpine, Amador, Butte, Calaveras, Colusa, Contra Costa, Del Norte, El Dorado, Fresno, Glenn, Humboldt, Kings, Lake, Lassen, Madera, Marin, Mariposa, Mendocino, Merced, Modoc, Monterey, Napa, Nevada, Placer, Plumas, Sacramento, San Benito, San Francisco, San Joaquin, San Mateo, Santa Clara, Santa Cruz, Shasta, Sierra, Siskiyou, Solano, Sonoma, Stanislaus, Sutter, Tehama, Trinity, Tulare, Tuolumne, Yolo and Yuba counties.

		Employer Payments					Straight-Time		Overtime Hourly Rate		
CLASSIFICATION (JOURNEYPERSON)	Basic Hourly Rate	Health and Welfare[a]	Pension	Vacation and Holiday	Training	Other Payment	Hours	Total Hourly Rate	Daily[b] 1 1/2X	Saturday[b] 1 1/2X	Sunday/ Holiday 2X
Group 1	$41.63	13.03	8.87	5.27	0.33	0.19	8	69.32	90.135	90.135	110.95
Group 2	39.63	13.03	8.87	5.27	0.33	0.19	8	67.32	87.135	87.135	106.95
Group 3	33.49	13.03	8.87	5.27	0.33	0.19	8	61.18	77.925	77.925	94.67
Group 4	28.26	13.03	8.87	5.27	0.33	0.19	8	55.95	70.08	70.08	84.21

# Indicates an apprenticeable craft. The current apprentice wage rates are available on the Internet @ http://www.dir.ca.gov/OPRL/PWAppWage/PWAppWageStart.asp. To obtain any apprentice wage rates as of July 1, 2008 and prior to September 27, 2012, please contact the Division of Apprenticeship Standards or refer to the Division of Apprenticeship Standards' website at http://www.dir.ca.gov/das/das.html.

[a] Amount shall be paid for all hours worked up to 173 hours per month.

[b] Rate applies to the first 4 daily overtime hours, Monday through Friday, and the first 8 hours on Saturday. All other overtime is paid at the Sunday/Holiday overtime rate.

CLASSIFICATIONS:

Group 1	Group 2	Group 3	Group 4
ASNT Level II-III	AWS-CWI	Geotechnical Driller	ACI
DSA Masonry	ICC Certified Structural Inspector	Soils/Asphalt	Drillers Helper
DSA Shotcrete	NICET Level III	Earthwork Grading	ICC Fireproofing
Lead Inspector	Shear Wall/Floor System Inspector	Excavation and Backfill	NICET Level I
NICET Level IV	Building/Construction Inspector	NICET Level II	Proofload Testing
NDT Level Two			Torque Testing
			NDT Level One

RECOGNIZED HOLIDAYS: Holidays upon which the general prevailing hourly wage rate for Holiday work shall be paid, shall be all holidays in the collective bargaining agreement, applicable to the particular craft, classification, or type of worker employed on the project, which is on file with the Director of Industrial Relations. If the prevailing rate is not based on a collectively bargained rate, the holidays upon which the prevailing rate shall be paid shall be as provided in Section 6700 of the Government Code. You may obtain the holiday provisions for the current determinations on the Internet at http://www.dir.ca.gov/OPRL/PWD. Holiday provisions for current or superseded determinations may be obtained by contacting the Office of the Director – Research Unit at (415) 703-4774.

TRAVEL AND/OR SUBSISTENCE PAYMENT: In accordance with Labor Code Sections 1773.1 and 1773.9, contractors shall make travel and/or subsistence payments to each worker to execute the work. You may obtain the travel and/or subsistence provisions for the current determinations on the Internet at http://www.dir.ca.gov/OPRL/PWD. Travel and/or subsistence requirements for current or superseded determinations may be obtained by contacting the Office of the Director – Research Unit at (415) 703-4774.

DocuSign Envelope ID: 894511EA-295B-49EB-A393-D26A6837FDD4

GENERAL PREVAILING WAGE DETERMINATION MADE BY THE DIRECTOR OF INDUSTRIAL RELATIONS
PURSUANT TO CALIFORNIA LABOR CODE PART 7, CHAPTER 1, ARTICLE 2, SECTIONS 1770, 1773 AND 1773.1

FOR COMMERCIAL BUILDING, HIGHWAY, HEAVY CONSTRUCTION AND DREDGING PROJECTS

CRAFT: #BUILDING/CONSTRUCTION INSPECTOR AND FIELD SOILS AND MATERIAL TESTER (SECOND SHIFT)

DETERMINATION: NC-63-3-9-2014-1
ISSUE DATE: August 22, 2014
EXPIRATION DATE OF DETERMINATION: June 30, 2015* Effective until superseded by a new determination issued by the Director of Industrial Relations. Contact the Office of the Director – Research Unit at (415) 703-4774 for the new rates after ten days after the expiration date if no subsequent determination is issued.

LOCALITY: All localities within Alameda, Alpine, Amador, Butte, Calaveras, Colusa, Contra Costa, Del Norte, El Dorado, Fresno, Glenn, Humboldt, Kings, Lake, Lassen, Madera, Marin, Mariposa, Mendocino, Merced, Modoc, Monterey, Napa, Nevada, Placer, Plumas, Sacramento, San Benito, San Francisco, San Joaquin, San Mateo, Santa Clara, Santa Cruz, Shasta, Sierra, Siskiyou, Solano, Sonoma, Stanislaus, Sutter, Tehama, Trinity, Tulare, Tuolumne, Yolo and Yuba counties.

		Employer Payments					Straight-Time		Overtime Hourly Rate		
CLASSIFICATION (JOURNEYPERSON)	Basic Hourly Rate	Health and Welfare[a]	Pension	Vacation and Holiday	Training	Other Payment	Hours	Total Hourly Rate	Daily[b] 1 1/2X	Saturday[b] 1 1/2X	Sunday/ Holiday 2X
Group 1	$46.83	13.03	8.87	5.27	0.33	0.19	8	74.52	97.935	97.935	121.35
Group 2	44.58	13.03	8.87	5.27	0.33	0.19	8	72.27	94.56	94.56	116.85
Group 3	37.68	13.03	8.87	5.27	0.33	0.19	8	65.37	84.21	84.21	103.05
Group 4	31.79	13.03	8.87	5.27	0.33	0.19	8	59.48	75.375	75.375	91.27

# Indicates an apprenticeable craft. The current apprentice wage rates are available on the Internet @ http://www.dir.ca.gov/OPRL/PWAppWage/PWAppWageStart.asp. To obtain any apprentice wage rates as of July 1, 2008 and prior to September 27, 2012, please contact the Division of Apprenticeship Standards or refer to the Division of Apprenticeship Standards' website at http://www.dir.ca.gov/das/das.html.
[a] Amount shall be paid for all hours worked up to 173 hours per month.
[b] Rate applies to the first 4 daily overtime hours, Monday through Friday, and the first 8 hours on Saturday. All other overtime is paid at the Sunday/Holiday overtime rate.

CLASSIFICATIONS:

Group 1	Group 2	Group 3	Group 4
ASNT Level II-III	AWS-CWI	Geotechnical Driller	ACI
DSA Masonry	ICC Certified Structural Inspector	Soils/Asphalt	Drillers Helper
DSA Shotcrete	NICET Level III	Earthwork Grading	ICC Fireproofing
Lead Inspector	Shear Wall/Floor System Inspector	Excavation and Backfill	NICET Level I
NICET Level IV	Building/Construction Inspector	NICET Level II	Proofload Testing
NDT Level Two			Torque Testing
			NDT Level One

RECOGNIZED HOLIDAYS: Holidays upon which the general prevailing hourly wage rate for Holiday work shall be paid, shall be all holidays in the collective bargaining agreement, applicable to the particular craft, classification, or type of worker employed on the project, which is on file with the Director of Industrial Relations. If the prevailing rate is not based on a collectively bargained rate, the holidays upon which the prevailing rate shall be paid shall be as provided in Section 6700 of the Government Code. You may obtain the holiday provisions for the current determinations on the Internet at http://www.dir.ca.gov/OPRL/PWD. Holiday provisions for current or superseded determinations may be obtained by contacting the Office of the Director – Research Unit at (415) 703-4774.

TRAVEL AND/OR SUBSISTENCE PAYMENT: In accordance with Labor Code Sections 1773.1 and 1773.9, contractors shall make travel and/or subsistence payments to each worker to execute the work. You may obtain the travel and/or subsistence provisions for the current determinations on the Internet at http://www.dir.ca.gov/OPRL/PWD. Travel and/or subsistence requirements for current or superseded determinations may be obtained by contacting the Office of the Director – Research Unit at (415) 703-4774.

DocuSign Envelope ID: 894511EA-295B-49EB-A393-D26A6837FDD4

GENERAL PREVAILING WAGE DETERMINATION MADE BY THE DIRECTOR OF INDUSTRIAL RELATIONS PURSUANT TO CALIFORNIA LABOR CODE PART 7, CHAPTER 1, ARTICLE 2, SECTIONS 1770, 1773 AND 1773.1 FOR COMMERCIAL BUILDING, HIGHWAY, HEAVY CONSTRUCTION AND DREDGING PROJECTS

CRAFT: DRIVER (ON/OFF-HAULING TO/FROM CONSTRUCTION SITE)

Determination: C-DT-830-261-7-2009-1
Issue Date: February 22, 2009
Expiration date of determination: March 3, 2010* Effective until superseded by a new determination issued by the Director of Industrial Relations. Contact the Division of Labor Statistics and Research at (415) 703-4774 for new rates after 10 days from expiration date, if no subsequent determination is issued.
Localities: All localities within Alameda, Contra Costa, Del Norte, Humboldt, Lassen, Modoc, San Francisco, San Mateo, Santa Clara, Shasta, Siskiyou and Trinity Counties.

		Employer Payments					Straight-Time		Overtime Hourly Rate	
Classification	Basic Hourly Rate	Health And Welfare	Pension	Vacation And Holiday	Training	Other	Hours	Total Hourly Rate	Daily (1½ X)	Sunday/ Holiday (1½ X)
Driver: Dump Truck	$22.50	[a]	-	$0.43[b]	-	-	8.0	$22.93	$34.18[c]	$34.18

[a] Health and Welfare will increase from $0.00 to $1.16 after 90 days of service, which will be seen as an increase to the Total Hourly Rate as well.
[b] $0.78 after 90 days of service with the employer
$1.21 after 5 years of service with the employer
$1.65 after 10 years of service with the employer
[c] Rate applies to work in excess of eight (8) hours daily and forty (40) hours weekly.
* There is no predetermined increase applicable to this determination.

RECOGNIZED HOLIDAYS: Holidays upon which the general prevailing hourly wage rate for Holiday work shall be paid, shall be all holidays in the collective bargaining agreement, applicable to the particular craft, classification, or type of worker employed on the project, which is on file with the Director of Industrial Relations. If the prevailing rate is not based on a collectively bargained rate, the holidays upon which the prevailing rate shall be paid shall be as provided in Section 6700 of the Government Code. You may obtain the holiday provisions for the current determinations on the Internet at http://www.dir.ca.gov/DLSR/PWD. Holiday provisions for current or superseded determinations may be obtained by contacting the Prevailing Wage Unit at (415) 703-4774.

TRAVEL AND/OR SUBSISTENCE PAYMENT: In accordance with Labor Code Sections 1773.1 and 1773.9, contractors shall make travel and/or subsistence payments to each worker to execute the work. You may obtain the travel and/or subsistence requirements for the current determinations on the Internet at http://www.dir.ca.gov/DLRS/PWD. Travel and/or subsistence requirements for current or superseded determinations may be obtained by contacting the Prevailing Wage Unit at (415) 703-4774.

DocuSign Envelope ID: 894511EA-295B-49EB-A393-D26A6837FDD4

STATE OF CALIFORNIA Arnold Schwarzenegger, *Governor*

DEPARTMENT OF INDUSTRIAL RELATIONS
Office of the Director
455 Golden Gate Avenue, 10th Floor
San Francisco, CA 94102
Tel: (415) 703-5050 Fax: (415) 703-5059/8

MAILING ADDRESS:
P. O. Box 420603
San Francisco, CA 94142-0603

February 22, 2009

IMPORTANT NOTICE TO AWARDING BODIES, OTHER INTERESTED PARTIES, AND CD RECIPIENTS REGARDING THE GENERAL PREVAILING WAGE DETERMINATIONS FOR THE CRAFT OF DRIVER (ON/OFF-HAULING TO/FROM CONSTRUCTION SITE)

The Department of Industrial Relations ("Department") conducted a wage investigation to determine the prevailing wage rate(s) for the craft of Driver (On/Off-Hauling to/from a Construction Site). Based on the results of this investigation, the Department has issued statewide prevailing wage determinations for the classifications of Dump Truck Driver and Mixer Truck Driver (see pages 2L-1 through 2L-6 and pages 2K-1 through 2K-16, respectively). These determinations will be applicable to public works projects advertised for bids on or after March 4, 2009.

The Department determined that the Dump Truck Driver rates found in the Teamsters Master Labor Agreement for on-site construction also set the prevailing rate for On/Off-Hauling to/from a Construction Site for Marin, Napa, Solano, Sonoma, and Yolo Counties. Based on the results of this investigation, this on-site determination does not apply to any other counties for On/Off-Hauling to/from a Construction Site. To find the applicable rate(s) for the Dump Truck Driver classification in Marin, Napa, Solano, Sonoma, and Yolo Counties, please refer to the prevailing wage determination for the craft of Teamster (Applies only to Work on the Construction Site) found on pages 55, 56, and 56A of the Director's General Prevailing Wage Determinations.

For CD recipients, please note the correction that determination NC-23-261-4-2005-1 for the craft of Driver (On/Off-Hauling to/from a Construction Site), page 59, is no longer applicable to public works projects advertised for bids on or after March 4, 2009. To obtain the current determinations for this craft, please visit our website at http://www.dir.ca.gov/DLSR/PWD/Statewide.html on or after March 4, 2009, or contact the Prevailing Wage Unit at (415) 703-4774.

DocuSign Envelope ID: 894511EA-295B-49EB-A393-D26A6837FDD4

GENERAL PREVAILING WAGE DETERMINATION MADE BY THE DIRECTOR OF INDUSTRIAL RELATIONS PURSUANT TO CALIFORNIA LABOR CODE PART 7, CHAPTER 1, ARTICLE 2, SECTIONS 1770, 1773 AND 1773.1 FOR COMMERCIAL BUILDING, HIGHWAY, HEAVY CONSTRUCTION AND DREDGING PROJECTS

CRAFT: DRIVER (ON/OFF-HAULING TO/FROM CONSTRUCTION SITE)

Determination: C-MT-261-X-265-2011-1
Issue Date: August 22, 2011
Expiration date of determination: July 31, 2012* Effective until superseded by a new determination issued by the Director of Industrial Relations. Contact the Division of Labor Statistics and Research at (415) 703-4774 for the new rates after 10 days from the expiration date, if no subsequent determination is issued.

Localities: All localities within Alameda, Contra Costa, Marin, Napa, Solano and Sonoma Counties.

		Employer Payments					Straight-Time		Overtime Hourly Rate		
Classification	Basic Hourly Rate	Health and Welfare	Pension	Vacation And Holiday	Training	Other	Hours	Total Hourly Rate	Daily (1½ X)	Saturday (1½ X)	Sunday/ Holiday (2 X)
Ready Mix Driver	$25.65	$8.41	$5.75	$2.25	-	-	8.0	$42.06	$54.89	$54.89	$67.71

RECOGNIZED HOLIDAYS: Holidays upon which the general prevailing hourly wage rate for Holiday work shall be paid, shall be all holidays in the collective bargaining agreement, applicable to the particular craft, classification, or type of worker employed on the project, which is on file with the Director of Industrial Relations. If the prevailing rate is not based on a collectively bargained rate, the holidays upon which the prevailing rate shall be paid shall be as provided in Section 6700 of the Government Code. You may obtain the holiday provisions for the current determinations on the Internet at http://www.dir.ca.gov/DLSR/PWD. Holiday provisions for current or superseded determinations may be obtained by contacting the Prevailing Wage Unit at (415) 703-4774.

TRAVEL AND/OR SUBSISTENCE PAYMENT: In accordance with Labor Code Sections 1773.1 and 1773.9, contractors shall make travel and/or subsistence payments to each worker to execute the work. You may obtain the travel and/or subsistence requirements for the current determinations on the Internet at http://www.dir.ca.gov/DLRS/PWD. Travel and/or subsistence requirements for current or superseded determinations may be obtained by contacting the Prevailing Wage Unit at (415) 703-4774.

DocuSign Envelope ID: 894511EA-295B-49EB-A393-D26A6837FDD4

GENERAL PREVAILING WAGE DETERMINATION MADE BY THE DIRECTOR OF INDUSTRIAL RELATIONS PURSUANT TO CALIFORNIA LABOR CODE PART 7, CHAPTER 1, ARTICLE 2, SECTIONS 1770, 1773 AND 1773.1 FOR COMMERCIAL BUILDING, HIGHWAY, HEAVY CONSTRUCTION AND DREDGING PROJECTS

CRAFT: DRIVER (ON/OFF-HAULING TO/FROM CONSTRUCTION SITE)

Determination: C-MT-830-261-3-2009-1
Issue Date: February 22, 2009
Expiration date of determination: March 3, 2010* Effective until superseded by a new determination issued by the Director of Industrial Relations. Contact the Division of Labor Statistics and Research at (415) 703-4774 for the new rates after 10 days from the expiration date, if no subsequent determination is issued.
Localities: All localities within Monterey, San Benito, San Francisco, San Mateo, Santa Clara, and Santa Cruz Counties.

		Employer Payments					Straight-Time		Overtime Hourly Rate	
Classification	Basic Hourly Rate	Health And Welfare	Pension	Vacation And Holiday	Training	Other	Hours	Total Hourly Rate	Daily (1½ X)	Sunday/ Holiday (1½ X)
Driver: Mixer Truck	$21.50	$9.64	$1.72 [a]	$0.99 [b]	-	-	8.0	$33.85	$45.46[c]	$45.46

[a] This amount is factored at the applicable overtime rate.
[b] $1.41 after 2 years of service
$1.82 after 10 years of service
$2.23 after 20 years of service
[c] Rate applies to work in excess of eight (8) hours daily and forty (40) hours weekly.
* There is no predetermined increase applicable to this determination.

RECOGNIZED HOLIDAYS: Holidays upon which the general prevailing hourly wage rate for Holiday work shall be paid, shall be all holidays in the collective bargaining agreement, applicable to the particular craft, classification, or type of worker employed on the project, which is on file with the Director of Industrial Relations. If the prevailing rate is not based on a collectively bargained rate, the holidays upon which the prevailing rate shall be paid shall be as provided in Section 6700 of the Government Code. You may obtain the holiday provisions for the current determinations on the Internet at http://www.dir.ca.gov/DLSR/PWD. Holiday provisions for current or superseded determinations may be obtained by contacting the Prevailing Wage Unit at (415) 703-4774.

TRAVEL AND/OR SUBSISTENCE PAYMENT: In accordance with Labor Code Sections 1773.1 and 1773.9, contractors shall make travel and/or subsistence payments to each worker to execute the work. You may obtain the travel and/or subsistence requirements for the current determinations on the Internet at http://www.dir.ca.gov/DLRS/PWD. Travel and/or subsistence requirements for current or superseded determinations may be obtained by contacting the Prevailing Wage Unit at (415) 703-4774.

DocuSign Envelope ID: 894511EA-295B-49EB-A393-D26A6837FDD4

GENERAL PREVAILING WAGE DETERMINATION MADE BY THE DIRECTOR OF INDUSTRIAL RELATIONS
PURSUANT TO CALIFORNIA LABOR CODE PART 7, CHAPTER 1, ARTICLE 2, SECTIONS 1770, 1773 AND 1773.1

FOR COMMERCIAL BUILDING, HIGHWAY, HEAVY CONSTRUCTION AND DREDGING PROJECTS

CRAFT: #LABORER AND RELATED CLASSIFICATIONS

DETERMINATION: NC-23-102-1-2014-3
ISSUE DATE: August 22, 2014
EXPIRATION DATE OF DETERMINATION: JUNE 28, 2015** The rate to be paid for work performed after this date has been determined. If work will extend past this date, the new rate must be paid and should be incorporated in contracts entered into now. Contact the Office of the Director – Research Unit for specific rates at (415) 703-4774.

LOCALITY: ALL LOCALITIES WITHIN ALAMEDA, ALPINE, AMADOR, BUTTE, CALAVERAS, COLUSA, CONTRA COSTA, DEL NORTE, EL DORADO, FRESNO, GLENN, HUMBOLDT, KINGS, LAKE, LASSEN, MADERA, MARIPOSA, MARIN, MENDOCINO, MERCED, MODOC, MONTEREY, NAPA, NEVADA, PLACER, PLUMAS, SACRAMENTO, SAN BENITO, SAN FRANCISCO, SAN JOAQUIN, SAN MATEO, SANTA CLARA, SANTA CRUZ, SHASTA, SIERRA, SISKIYOU, SOLANO, SONOMA, STANISLAUS, SUTTER, TEHAMA, TRINITY, TULARE, TUOLUMNE, YOLO, AND YUBA COUNTIES.

		Employer Payments					Straight-Time		Overtime Hourly Rate		
Classification[a] (Journeyperson)	Basic Hourly Rate[g]	Health and Welfare	Pension	Vacation and Holiday	Training	Other Payments	Hours[f]	Total Hourly Rate	Daily 1 1/2X	Saturday[b] 1 1/2X	Sunday/ Holiday 2X
AREA 1[c]											
Construction Specialist	29.09	6.84	10.10	2.63	0.41	0.15	8	49.22	63.765	63.765	78.31
Group 1; Group 1(B)[e]	28.39	6.84	10.10	2.63	0.41	0.15	8	48.52	62.715	62.715	76.91
Group 1 (A)	28.61	6.84	10.10	2.63	0.41	0.15	8	48.74	63.045	63.045	77.35
Group 1 (C)	28.44	6.84	10.10	2.63	0.41	0.15	8	48.57	62.79	62.79	77.01
Group 1 (E)	28.94	6.84	10.10	2.63	0.41	0.15	8	49.07	63.54	63.54	78.01
Group 1 (F-1)	28.97	6.84	10.10	2.63	0.41	0.15	8	49.10	63.585	63.585	78.07
Group 1 (F-2)	27.99	6.84	10.10	2.63	0.41	0.15	8	48.12	62.115	62.115	76.11
Group 1 (G)	28.59	6.84	10.10	2.63	0.41	0.15	8	48.72	63.015	63.015	77.31
Group 2	28.24	6.84	10.10	2.63	0.41	0.15	8	48.37	62.49	62.49	76.61
Group 3; Group 3(A)	28.14	6.84	10.10	2.63	0.41	0.15	8	48.27	62.34	62.34	76.41
Group 4; Group 6(B)	21.83	6.84	10.10	2.63	0.41	0.15	8	41.96	52.875[d]	52.875[d]	63.79[d]
Group 6	29.35	6.84	10.10	2.63	0.41	0.15	8	49.48	64.155	64.155	78.83
Group 6 (A)	28.85	6.84	10.10	2.63	0.41	0.15	8	48.98	63.405	63.405	77.83
Group 6 (C)	28.26	6.84	10.10	2.63	0.41	0.15	8	48.39	62.52	62.52	76.65
Group 7 – Stage 1 (1st 6 months)	19.70	6.84	10.10	2.63	0.41	0.15	8	39.83	49.68	49.68	59.53
Stage 2 (2nd 6 months)	22.51	6.84	10.10	2.63	0.41	0.15	8	42.64	53.895	53.895	65.15
Stage 3 (3rd 6 months)	25.33	6.84	10.10	2.63	0.41	0.15	8	45.46	58.125	58.125	70.79
AREA 2[c]											
Construction Specialist	28.09	6.84	10.10	2.63	0.41	0.15	8	48.22	62.265	62.265	76.31
Group 1; Group 1(B)[e]	27.39	6.84	10.10	2.63	0.41	0.15	8	47.52	61.215	61.215	74.91
Group 1 (A)	27.61	6.84	10.10	2.63	0.41	0.15	8	47.74	61.545	61.545	75.35
Group 1 (C)	27.44	6.84	10.10	2.63	0.41	0.15	8	47.57	61.29	61.29	75.01
Group 1 (E)	27.94	6.84	10.10	2.63	0.41	0.15	8	48.07	62.04	62.04	76.01
Group 1 (F-1)	27.97	6.84	10.10	2.63	0.41	0.15	8	48.10	62.085	62.085	76.07
Group 1 (F-2)	26.99	6.84	10.10	2.63	0.41	0.15	8	47.12	60.615	60.615	74.11
Group 2	27.24	6.84	10.10	2.63	0.41	0.15	8	47.37	60.99	60.99	74.61
Group 3; Group 3(A)	27.14	6.84	10.10	2.63	0.41	0.15	8	47.27	60.84	60.84	74.41
Group 4; Group 6(B)	20.83	6.84	10.10	2.63	0.41	0.15	8	40.96	51.375[d]	51.375[d]	61.79[d]
Group 6	28.35	6.84	10.10	2.63	0.41	0.15	8	48.48	62.655	62.655	76.83
Group 6 (A)	27.85	6.84	10.10	2.63	0.41	0.15	8	47.98	61.905	61.905	75.83
Group 6 (C)	27.26	6.84	10.10	2.63	0.41	0.15	8	47.39	61.02	61.02	74.65
Group 7 – Stage 1 (1st 6 months)	19.00	6.84	10.10	2.63	0.41	0.15	8	39.13	48.63	48.63	58.13
Stage 2 (2nd 6 months)	21.71	6.84	10.10	2.63	0.41	0.15	8	41.84	52.695	52.695	63.55
Stage 3 (3rd 6 months)	24.43	6.84	10.10	2.63	0.41	0.15	8	44.56	56.775	56.775	68.99

PLEASE GO TO PAGE 50 FOR CLASSIFICATIONS WITHIN EACH GROUP

# INDICATES AN APPRENTICEABLE CRAFT. THE CURRENT APPRENTICE WAGE RATES ARE AVAILABLE ON THE INTERNET AT HTTP://WWW.DIR.CA.GOV/OPRL/PWAPPWAGE/PWAPPWAGESTART.ASP. TO OBTAIN ANY APPRENTICE WAGE RATES AS OF JULY 1, 2008 AND PRIOR TO SEPTEMBER 27, 2012, PLEASE CONTACT THE DIVISION OF APPRENTICESHIP STANDARDS OR REFER TO THE DIVISION OF APPRENTICESHIP STANDARDS' WEBSITE AT HTTP://WWW.DIR.CA.GOV/DAS/DAS.HTML.

a GROUP 1(D) - MAINTENANCE OR REPAIR TRACKMEN AND ROAD BEDS AND ALL EMPLOYEES PERFORMING WORK COVERED BY THIS CLASSIFICATION SHALL RECEIVE $0.25 PER PER HOUR ABOVE THEIR REGULAR RATE FOR ALL WORK PERFORMED ON UNDERGROUND STRUCTURES NOT SPECIFICALLY COVERED HEREIN. THIS SHALL NOT APPLY TO WORK BELOW GROUND LEVEL IN OPEN CUT. THIS SHALL APPLY TO CUT AND COVER WORK OF SUBWAY CONSTRUCTION AFTER TEMPORARY COVER HAS BEEN PLACED.

GROUP 1(H) - ALL LABORERS WORKING OFF OR WITH OR FROM BOS'N CHAIRS, SWINGING SCAFFOLDS, BELTS RECEIVE $0.25 PER HOUR ABOVE THEIR APPLICABLE WAGE RATE. THIS SHALL NOT APPLY TO LABORERS ENTITLED TO RECEIVE THE WAGE RATE SET FORTH IN GROUP 1(A).

b SATURDAYS IN THE SAME WORK WEEK MAY BE WORKED AT STRAIGHT-TIME IF JOB IS SHUT DOWN DURING THE NORMAL WORK WEEK DUE TO INCLEMENT WEATHER, MAJOR MECHANICAL BREAKDOWN OR LACK OF MATERIALS BEYOND THE CONTROL OF THE EMPLOYER.

c **AREA 1** - ALAMEDA, CONTRA COSTA, MARIN, SAN FRANCISCO, SAN MATEO, AND SANTA CLARA COUNTIES.

AREA 2 - ALPINE, AMADOR, BUTTE, CALAVERAS, COLUSA, DEL NORTE, EL DORADO, FRESNO, GLENN, HUMBOLDT, KINGS, LAKE, LASSEN, MADERA, MARIPOSA, MENDOCINO, MERCED, MODOC, MONTEREY, NAPA, NEVADA, PLACER, PLUMAS, SACRAMENTO, SAN BENITO, SAN JOAQUIN, SANTA CRUZ, SHASTA, SIERRA, SISKIYOU, SOLANO, SONOMA, STANISLAUS, SUTTER, TEHAMA, TRINITY, TULARE, TUOLUMNE, YOLO AND YUBA COUNTIES.

d SERVICE LANDSCAPE LABORER ON NEW CONSTRUCTION MAY WORK ANY FIVE (5) DAYS WITHIN A WEEK.

e GROUP 1(B) RECEIVES AN ADDITIONAL AMOUNT EACH DAY. SEE PAGE 50 FOR DETAILS.

f WHEN THREE SHIFTS ARE EMPLOYED FOR FIVE (5) OR MORE CONSECUTIVE DAYS, SEVEN AND ONE-HALF (7 ½) CONSECUTIVE HOURS (EXCLUSIVE OF MEAL PERIOD), SHALL CONSTITUTE A DAY OF WORK, FOR WHICH EIGHT (8) TIMES THE STRAIGHT TIME HOURLY RATE SHALL BE PAID AT THE NON-SHIFT WAGE RATE FOR THE SECOND SHIFT. THE THIRD SHIFT SHALL BE SEVEN (7) HOURS OF WORK FOR EIGHT (8) HOURS PAY AT THE NON-SHIFT WAGE RATE.

g ZONE PAY AT THREE DOLLARS ($3.00) PER HOUR, FACTORED AT THE APPLICABLE OVERTIME MULTIPLE, WILL BE ADDED TO THE BASE RATE FOR WORK PERFORMED OUTSIDE THE FREE ZONE DESCRIBED BY THE BOUNDARIES ALONG TOWNSHIP AND RANGE LINES. PLEASE SEE TRAVEL AND SUBSISTENCE PROVISION FOR MAP DESCRIPTION AND EXCEPTIONS.

RECOGNIZED HOLIDAYS: HOLIDAYS UPON WHICH THE GENERAL PREVAILING HOURLY WAGE RATE FOR HOLIDAY WORK SHALL BE PAID, SHALL BE ALL HOLIDAYS IN THE COLLECTIVE BARGAINING AGREEMENT, APPLICABLE TO THE PARTICULAR CRAFT, CLASSIFICATION, OR TYPE OF WORKER EMPLOYED ON THE PROJECT, WHICH IS ON FILE WITH THE DIRECTOR OF INDUSTRIAL RELATIONS. IF THE PREVAILING RATE IS NOT BASED ON A COLLECTIVELY BARGAINED RATE, THE HOLIDAYS UPON WHICH THE PREVAILING RATE SHALL BE PAID SHALL BE AS PROVIDED IN SECTION 6700 OF THE GOVERNMENT CODE. YOU MAY OBTAIN THE HOLIDAY PROVISIONS FOR THE CURRENT DETERMINATIONS ON THE INTERNET AT HTTP://WWW.DIR.CA.GOV/OPRL/PWD. HOLIDAY PROVISIONS FOR CURRENT OR SUPERSEDED DETERMINATIONS MAY BE OBTAINED BY CONTACTING THE OFFICE OF THE DIRECTOR – RESEARCH UNIT AT (415) 703-4774.

TRAVEL AND/OR SUBSISTENCE PAYMENT: IN ACCORDANCE WITH LABOR CODE SECTIONS 1773.1 AND 1773.9, CONTRACTORS SHALL MAKE TRAVEL AND/OR SUBSISTENCE PAYMENTS TO EACH WORKER TO EXECUTE THE WORK. YOU MAY OBTAIN THE TRAVEL AND/OR SUBSISTENCE PROVISIONS FOR THE CURRENT DETERMINATIONS ON THE INTERNET AT HTTP://WWW.DIR.CA.GOV/OPRL/PWD. TRAVEL AND/OR SUBSISTENCE REQUIREMENTS FOR CURRENT OR SUPERSEDED DETERMINATIONS MAY BE OBTAINED BY CONTACTING THE OFFICE OF THE DIRECTOR – RESEARCH UNIT AT (415) 703-4774.

DETERMINATION: NC-23-102-1-2014-3 and NC-23-102-1-2014-3A

CONSTRUCTION SPECIALIST
ASPHALT IRONERS AND RAKERS
CHAINSAW
CONCRETE DIAMOND CHAINSAW
LASER BEAM IN CONNECTION WITH LABORER'S WORK
MASONRY AND PLASTER TENDER
CAST IN PLACE MANHOLE FORM SETTERS
PRESSURE PIPELAYERS
DAVIS TRENCHER – 300 OR SIMILAR TYPE (AND ALL SMALL TRENCHERS)
STATE LICENSED BLASTERS AS DESIGNATED
DIAMOND DRILLERS
DIAMOND CORE DRILLER
MULTIPLE UNIT DRILLS
HIGH SCALERS (INCLUDING DRILLING OF SAME)
HYDRAULIC DRILLS
CERTIFIED WELDER

GROUP 1 (FOR CONTRA COSTA COUNTY ONLY, USE GROUP 1 (G) FOR SOME OF THE FOLLOWING CLASSIFICATIONS)
ASPHALT SPREADER BOXES (ALL TYPES)
BARKO, WACKER AND SIMILAR TYPE TAMPERS
BUGGYMOBILE
CAULKERS, BANDERS, PIPEWRAPPERS, CONDUIT LAYERS, PLASTIC PIPE LAYERS
CERTIFIED ASBESTOS AND MOLD REMOVAL WORKER
CERTIFIED HAZARDOUS WASTE WORKER (INCLUDING LEAD ABATEMENT)
COMPACTORS OF ALL TYPES
CONCRETE AND MAGNESITE MIXER AND ½ YARD
CONCRETE PAN WORK
CONCRETE SANDERS, CONCRETE SAW
CRIBBERS AND/OR SHORING
CUT GRANITE CURB SETTER
DRI PAK-IT MACHINE
FALLER, LOGLOADER AND BUCKER
FORM RAISERS, SLIP FORMS
GREEN CUTTERS
HEADERBOARD MEN, HUBSETTERS, ALIGNERS BY ANY METHOD
HIGH PRESSURE BLOW PIPE (1-1/2" OR OVER, 100 LBS. PRESSURE/OVER)
HYDRO SEEDER AND SIMILAR TYPE
JACKHAMMER OPERATORS
JACKING OF PIPE OVER 12 INCHES
JACKSON AND SIMILAR TYPE COMPACTORS
KETTLEMEN, POTMEN, AND MEN APPLYING ASPHALT, LAY-KOLD, CREOSOTE, LIME, CAUSTIC AND SIMILAR TYPE MATERIALS (APPLYING MEANS APPLYING DIPPING, OR HANDLING OF SUCH MATERIALS)
LAGGING, SHEETING, WHALING, BRACING, TRENCH-JACKING, LAGGING HAMMER
MAGNESITE, EPOXY RESIN, FIBER GLASS AND MASTIC WORKERS (WET/DRY)
NO JOINT PIPE AND STRIPPING OF SAME, INCLUDING REPAIR OF VOIDS
PAVEMENT BREAKERS AND SPADERS, INCLUDING TOOL GRINDER
PERMA CURBS
PRECAST-MANHOLE SETTERS
PIPELAYERS (INCLUDING GRADE CHECKING IN CONNECTION WITH PIPELAYING)
PRESSURE PIPE TESTER
POST HOLE DIGGERS-AIR, GAS, AND ELECTRIC POWER BROOM SWEEPERS
POWER TAMPERS OF ALL TYPES, EXCEPT AS SHOWN IN GROUP 2
RAM SET GUN AND STUD GUN
RIPRAP-STONEPAVER AND ROCK-SLINGER, INCLUDING PLACING OF SACKED CONCRETE AND/OR SAND (WET OR DRY) AND GABIONS AND SIMILAR TYPE
ROTARY SCARIFIER OR MULTIPLE HEAD CONCRETE CHIPPING SCARIFIER
ROTO AND DITCH WITCH
ROTOTILLER
SAND BLASTERS, POTMEN, GUNMEN, AND NOZZLEMEN
SIGNALING AND RIGGING
SKILLED WRECKER (REMOVING AND SALVAGING OF SASH, WINDOWS, DOORS, PLUMBING AND ELECTRIC FIXTURES)
TANK CLEANERS
TREE CLIMBERS
TRENCHLESS TECHNOLOGY LABORER- PIPE INSTALLATION, BURSTING, RELINING, OR SIMILAR
TRENCHLESS LABORER'S WORK, CAMERA CONTROLLER
TURBO BLASTER
VIBRA-SCREED-BULL FLOAT IN CONNECTION WITH LABORER'S WORK
VIBRATORS

GROUP 1 (A)
ALL WORK OF LOADING, PLACING AND BLASTING OF ALL POWDER & EXPLOSIVES OF WHATEVER TYPE, REGARDLESS OF METHOD USED FOR LOADING AND PLACING
JOY DRILL MODEL TWM-2A
GARDENER-DENVER MODEL DH 143 AND SIMILAR TYPE DRILLS
TRACK DRILLERS
JACK LEG DRILLERS
WAGON DRILLERS
MECHANICAL DRILLERS-ALL TYPES REGARDLESS OF TYPE OR METHOD OF POWER
MECHANICAL PIPE LAYER-ALL TYPES REGARDLESS OF TYPE OR METHOD OF POWER
BLASTERS AND POWDERMAN
TREE TOPPER
BIT GRINDER

GROUP 1 (B) -- SEE GROUP 1 RATES
SEWER CLEANERS (ANY WORKMEN WHO HANDLE OR COME IN CONTACT WITH RAW SEWAGE IN SMALL DIAMETER SEWERS) SHALL RECEIVE $4.00 PER DAY ABOVE GROUP 1 WAGE RATES. THOSE WHO WORK INSIDE RECENTLY ACTIVE, LARGE DIAMETER SEWERS, AND ALL RECENTLY ACTIVE SEWER MANHOLES SHALL RECEIVE $5.00 PER DAY ABOVE GROUP 1 WAGE RATES.

GROUP 1 (C)
BURNING AND WELDING IN CONNECTION WITH LABORER'S WORK
SYNTHETIC THERMOPLASTICS AND SIMILAR TYPE WELDING

GROUP 1 (D)
SEE FOOTNOTE A ON PAGE 49

GROUP 1 (E)
WORK ON AND/OR IN BELL HOLE FOOTINGS AND SHAFTS THEREOF, AND WORK ON AND IN DEEP FOOTINGS (DEEP FOOTINGS IS A HOLE 15 FEET OR MORE IN DEPTH)
SHAFT IS AN EXCAVATION OVER FIFTEEN (15) FEET DEEP OF ANY TYPE

GROUP 1 (F-1)
ALIGNER OF WIRE WINDING MACHINE IN CONNECTION WITH GUNITING OR SHOT CRETE

GROUP 1 (F-2)
ALIGNER HELPER OF WIRE WINDING MACHINE IN CONNECTION WITH GUNITING OR SHOT CRETE

GROUP 1 (G) APPLIES ONLY TO WORK IN CONTRA COSTA COUNTY
PIPELAYERS (INCLUDING GRADE CHECKING IN CONNECTION WITH PIPELAYING), CAULKERS, BANDERS, PIPEWRAPPERS, CONDUIT LAYERS, PLASTIC PIPE LAYER, PRESSURE PIPE TESTER, NO JOINT PIPE AND STRIPPING OF SAME, INCLUDING REPAIR OF VOIDS, PRECAST MANHOLE SETTERS, CAST IN PLACE MANHOLE FORM SETTERS IN CONTRA COSTA COUNTY ONLY

GROUP 1(H)
SEE FOOTNOTE A ON PAGE 49

GROUP 2
ASPHALT SHOVELERS
CEMENT DUMPERS AND HANDLING DRY CEMENT OR GYPSUM
CHOKE-SETTER AND RIGGER (CLEARING WORK)
CONCRETE BUCKET DUMPER AND CHUTEMAN
CONCRETE CHIPPING AND GRINDING
CONCRETE LABORERS (WET OR DRY)
DRILLERS HELPER, CHUCK TENDER, NIPPER (ONE CHUCKTENDER ON SINGLE MACHINE OPERATION WITH MINIMUM OF ONE CHUCKTENDER FOR EACH TWO MACHINES ON MULTIPLE MACHINE OPERATION. JACKHAMMERS IN NO WAY INVOLVED IN THIS ITEM.)
GUINEA CHASER (STAKEMAN), GROUT CREW
HIGH PRESSURE NOZZLEMAN, ADDUCTORS
HYDRAULIC MONITOR (OVER 100 LBS. PRESSURE)
LOADING AND UNLOADING, CARRYING AND HANDLING OF ALL RODS AND MATERIALS FOR USE IN REINFORCING CONCRETE CONSTRUCTION
PITTSBURGH CHIPPER, AND SIMILAR TYPE BRUSH SHREDDERS
SEMI-SKILLED WRECKER (SALVAGING OF OTHER BUILDING MATERIALS) – SEE ALSO SKILLED WRECKER (GROUP 1)
SLOPER
SINGLEFOOT, HAND HELD, PNEUMATIC TAMPER
ALL PNEUMATIC, AIR, GAS AND ELECTRIC TOOLS NOT LISTED IN GROUPS 1 THROUGH 1 (F)
JACKING OF PIPE-UNDER 12 INCHES

GROUP 3
CONSTRUCTION LABORERS INCLUDING BRIDGE LABORERS, GENERAL LABORERS AND CLEANUP LABORERS
DEMOLITION WORKER
DUMPMAN, LOAD SPOTTER
FLAGPERSON/PEDESTRIAN MONITOR
FIRE WATCHER
FENCE ERECTORS, INCLUDING TEMPORARY FENCING
GUARDRAIL ERECTORS
GARDENER, HORTICULTURAL AND LANDSCAPE LABORERS (SEE GROUP 4, FOR LANDSCAPE MAINTENANCE ON NEW CONSTRUCTION DURING PLANT ESTABLISHMENT PERIOD)
JETTING
LIMBERS, BRUSH LOADERS, AND PILERS
PAVEMENT MARKERS (BUTTON SETTERS)
PAVERS/INTERLOCKING PAVERS (ALL TYPES) AND INTERLOCKING PAVER MACHINES
MAINTENANCE, REPAIR TRACKMEN AND ROAD BEDS
STREETCAR AND RAILROAD CONSTRUCTION TRACK LABORERS
TEMPORARY AIR AND WATER LINES, VICTAULIC OR SIMILAR
TOOL ROOM ATTENDANT (JOBSITE ONLY)
WHEELBARROW, INCLUDING POWER DRIVEN

GROUP 3 (A) -- SEE GROUP 3 RATES
COMPOSITE CREW PERSON (OPERATION OF VEHICLES, WHEN IN CONJUNCTION WITH LABORER'S DUTIES)

GROUP 4
ALL FINAL CLEANUP OF DEBRIS, GROUNDS AND BUILDINGS NEAR THE COMPLETION OF THE PROJECT INCLUDING BUT NOT LIMITED TO STREET CLEANERS (NOT APPLICABLE TO ENGINEERING OR HEAVY HIGHWAY PROJECTS)
CLEANING AND WASHING WINDOWS (NEW CONSTRUCTION ONLY), SERVICE LANDSCAPE LABORERS (SUCH AS GARDENER, HORTICULTURE, MOWING, TRIMMING, REPLANTING, WATERING DURING PLANT ESTABLISHMENT PERIOD) ON NEW CONSTRUCTION
BRICK CLEANERS (JOB SITE ONLY)
MATERIAL CLEANERS (JOB SITE ONLY)

NOTE: AN ADDITIONAL DETERMINATION FOR LANDSCAPE MAINTENANCE WORK AFTER THE PLANT ESTABLISHMENT PERIOD OR WARRANTY PERIOD IS PUBLISHED ON PAGE 57 OF THESE GENERAL DETERMINATIONS.

GROUP 6
STRUCTURAL NOZZLEMAN

GROUP 6 (A)
NOZZLEMAN (INCLUDING GUNMAN, POTMAN)
RODMAN
GROUNDMAN

GROUP 6 (B) -- SEE GROUP 4 RATES
GUNITE TRAINEE (ONE GUNITE LABORER SHALL BE ALLOWED FOR EACH THREE (3) JOURNEYMAN (GROUP 6, 6A, 6C, OR GENERAL LABORER) ON A CREW. IN THE ABSENCE OF THE JOURNEYMAN, THE GUNITE TRAINEE RECEIVES THE JOURNEYMAN SCALE.).
NOTE: THIS RATIO APPLIES ONLY TO WORK ON THE SAME JOB SITE.

GROUP 6 (C)
REBOUNDMAN

GROUP 7
LANDSCAPE LABORER TRAINEE (RATIO FOR TRAINEES IS ONE IN THREE. AT LEAST ONE SECOND PERIOD TRAINEE AND AT LEAST ONE THIRD PERIOD TRAINEE MUST BE EMPLOYED BEFORE EMPLOYING ANOTHER FIRST PERIOD TRAINEE).
NOTE: THIS RATIO APPLIES ONLY TO WORK ON THE SAME JOB SITE.

DocuSign Envelope ID: 894511EA-295B-49EB-A393-D26A6837FDD4

GENERAL PREVAILING WAGE DETERMINATION MADE BY THE DIRECTOR OF INDUSTRIAL RELATIONS
PURSUANT TO CALIFORNIA LABOR CODE PART 7, CHAPTER 1, ARTICLE 2, SECTIONS 1770, 1773 AND 1773.1
FOR COMMERCIAL BUILDING, HIGHWAY, HEAVY CONSTRUCTION AND DREDGING PROJECTS

CRAFT: #LABORER AND RELATED CLASSIFICATIONS (Special Single and Second Shift)

DETERMINATION: NC-23-102-1-2014-3A
ISSUE DATE: August 22, 2014
EXPIRATION DATE OF DETERMINATION: JUNE 28, 2015** The rate to be paid for work performed after this date has been determined. If work will extend past this date, the new rate must be paid and should be incorporated in contracts entered into now. Contact the Office of the Director-Research Unit for specific rates at (415) 703-4774.
LOCALITY: ALL LOCALITIES WITHIN ALAMEDA, ALPINE, AMADOR, BUTTE, CALAVERAS, COLUSA, CONTRA COSTA, DEL NORTE, EL DORADO, FRESNO, GLENN, HUMBOLDT, KINGS, LAKE, LASSEN, MADERA, MARIPOSA, MARIN, MENDOCINO, MERCED, MODOC, MONTEREY, NAPA, NEVADA, PLACER, PLUMAS, SACRAMENTO, SAN BENITO, SAN FRANCISCO, SAN JOAQUIN, SAN MATEO, SANTA CLARA, SANTA CRUZ, SHASTA, SIERRA, SISKIYOU, SOLANO, SONOMA, STANISLAUS, SUTTER, TEHAMA, TRINITY, TULARE, TUOLUMNE, YOLO, AND YUBA COUNTIES.

		Employer Payments					Straight-Time		Overtime Hourly Rate		
Classification[a] (Journeyperson)	Basic Hourly Rate[f]	Health and Welfare	Pension	Vacation and Holiday	Training	Other Payments	Hours	Total Hourly Rate	Daily 1 1/2X	Saturday[b] 1 1/2X	Sunday/ Holiday 2X
AREA 1[c]											
Construction Specialist	32.09	6.84	10.10	2.63	0.41	0.15	8	52.22	68.265	68.265	84.31
Group 1; Group 1(B)[e]	31.39	6.84	10.10	2.63	0.41	0.15	8	51.52	67.215	67.215	82.91
Group 1 (A)	31.61	6.84	10.10	2.63	0.41	0.15	8	51.74	67.545	67.545	83.35
Group 1 (C)	31.44	6.84	10.10	2.63	0.41	0.15	8	51.57	67.29	67.29	83.01
Group 1 (E)	31.94	6.84	10.10	2.63	0.41	0.15	8	52.07	68.04	68.04	84.01
Group 1 (F-1)	31.97	6.84	10.10	2.63	0.41	0.15	8	52.10	68.085	68.085	84.07
Group 1 (F-2)	30.99	6.84	10.10	2.63	0.41	0.15	8	51.12	66.615	66.615	82.11
Group 1 (G)	31.59	6.84	10.10	2.63	0.41	0.15	8	51.72	67.515	67.515	83.31
Group 2	31.24	6.84	10.10	2.63	0.41	0.15	8	51.37	66.99	66.99	82.61
Group 3; Group 3(A)	31.14	6.84	10.10	2.63	0.41	0.15	8	51.27	66.84	66.84	82.41
Group 4; Group 6(B)	24.83	6.84	10.10	2.63	0.41	0.15	8	44.96	57.375[d]	57.375[d]	69.79[d]
Group 6	32.35	6.84	10.10	2.63	0.41	0.15	8	52.48	68.655	68.655	84.83
Group 6 (A)	31.85	6.84	10.10	2.63	0.41	0.15	8	51.98	67.905	67.905	83.83
Group 6 (C)	31.26	6.84	10.10	2.63	0.41	0.15	8	51.39	67.02	67.02	82.65
Group 7 – Stage 1 (1st 6 months)	22.70	6.84	10.10	2.63	0.41	0.15	8	42.83	54.18	54.18	65.53
Stage 2 (2nd 6 months)	25.51	6.84	10.10	2.63	0.41	0.15	8	45.64	58.395	58.395	71.15
Stage 3 (3rd 6 months)	28.33	6.84	10.10	2.63	0.41	0.15	8	48.46	62.625	62.625	76.79
AREA 2[c]											
Construction Specialist	30.94	6.84	10.10	2.63	0.41	0.15	8	51.07	66.54	66.54	82.01
Group 1; Group 1(B)[e]	30.24	6.84	10.10	2.63	0.41	0.15	8	50.37	65.49	65.49	80.61
Group 1 (A)	30.46	6.84	10.10	2.63	0.41	0.15	8	50.59	65.82	65.82	81.05
Group 1 (C)	30.29	6.84	10.10	2.63	0.41	0.15	8	50.42	65.565	65.565	80.71
Group 1 (E)	30.79	6.84	10.10	2.63	0.41	0.15	8	50.92	66.315	66.315	81.71
Group 1 (F-1)	30.82	6.84	10.10	2.63	0.41	0.15	8	50.95	66.36	66.36	81.77
Group 1 (F-2)	29.84	6.84	10.10	2.63	0.41	0.15	8	49.97	64.89	64.89	79.81
Group 2	30.09	6.84	10.10	2.63	0.41	0.15	8	50.22	65.265	65.265	80.31
Group 3; Group 3(A)	29.99	6.84	10.10	2.63	0.41	0.15	8	50.12	65.115	65.115	80.11
Group 4; Group 6(B)	23.68	6.84	10.10	2.63	0.41	0.15	8	43.81	55.65[d]	55.65[d]	67.49[d]
Group 6	31.20	6.84	10.10	2.63	0.41	0.15	8	51.33	66.93	66.93	82.53
Group 6 (A)	30.70	6.84	10.10	2.63	0.41	0.15	8	50.83	66.18	66.18	81.53
Group 6 (C)	30.11	6.84	10.10	2.63	0.41	0.15	8	50.24	65.295	65.295	80.35
Group 7 – Stage 1 (1st 6 months)	21.85	6.84	10.10	2.63	0.41	0.15	8	41.98	52.905	52.905	63.83
Stage 2 (2nd 6 months)	24.56	6.84	10.10	2.63	0.41	0.15	8	44.69	56.97	56.97	69.25
Stage 3 (3rd 6 months)	27.28	6.84	10.10	2.63	0.41	0.15	8	47.41	61.05	61.05	74.69

PLEASE GO TO PAGE 50 FOR CLASSIFICATIONS WITHIN EACH GROUP

# INDICATES AN APPRENTICEABLE CRAFT. THE CURRENT APPRENTICE WAGE RATES ARE AVAILABLE ON THE INTERNET AT HTTP://WWW.DIR.CA.GOV/OPRL/PWAPPWAGE/PWAPPWAGESTART.ASP. TO OBTAIN ANY APPRENTICE WAGE RATES AS OF JULY 1, 2008 AND PRIOR TO SEPTEMBER 27, 2012, PLEASE CONTACT THE DIVISION OF APPRENTICESHIP STANDARDS OR REFER TO THE DIVISION OF APPRENTICESHIP STANDARDS' WEBSITE AT HTTP://WWW.DIR.CA.GOV/DAS/DAS.HTML.

a GROUP 1(D) - MAINTENANCE OR REPAIR TRACKMEN AND ROAD BEDS AND ALL EMPLOYEES PERFORMING WORK COVERED BY THIS CLASSIFICATION SHALL RECEIVE $0.25 PER PER HOUR ABOVE THEIR REGULAR RATE FOR ALL WORK PERFORMED ON UNDERGROUND STRUCTURES NOT SPECIFICALLY COVERED HEREIN. THIS SHALL NOT APPLY TO WORK BELOW GROUND LEVEL IN OPEN CUT. THIS SHALL APPLY TO CUT AND COVER WORK OF SUBWAY CONSTRUCTION AFTER TEMPORARY COVER HAS BEEN PLACED.

GROUP 1(H) - ALL LABORERS WORKING OFF OR WITH OR FROM BOS'N CHAIRS, SWINGING SCAFFOLDS, BELTS RECEIVE $0.25 PER HOUR ABOVE THEIR APPLICABLE WAGE RATE. THIS SHALL NOT APPLY TO LABORERS ENTITLED TO RECEIVE THE WAGE RATE SET FORTH IN GROUP 1(A).

b SATURDAYS IN THE SAME WORK WEEK MAY BE WORKED AT STRAIGHT-TIME IF JOB IS SHUT DOWN DURING THE NORMAL WORK WEEK DUE TO INCLEMENT WEATHER, MAJOR MECHANICAL BREAKDOWN OR LACK OF MATERIALS BEYOND THE CONTROL OF THE EMPLOYER.

c **AREA 1** - ALAMEDA, CONTRA COSTA, MARIN, SAN FRANCISCO, SAN MATEO, AND SANTA CLARA COUNTIES.

AREA 2 - ALPINE, AMADOR, BUTTE, CALAVERAS, COLUSA, DEL NORTE, EL DORADO, FRESNO, GLENN, HUMBOLDT, KINGS, LAKE, LASSEN, MADERA, MARIPOSA, MENDOCINO, MERCED, MODOC, MONTEREY, NAPA, NEVADA, PLACER, PLUMAS, SACRAMENTO, SAN BENITO, SAN JOAQUIN, SANTA CRUZ, SHASTA, SIERRA, SISKIYOU, SOLANO, SONOMA, STANISLAUS, SUTTER, TEHAMA, TRINITY, TULARE, TUOLUMNE, YOLO AND YUBA COUNTIES.

d SERVICE LANDSCAPE LABORER ON NEW CONSTRUCTION MAY WORK ANY FIVE (5) DAYS WITHIN A WEEK.

e GROUP 1(B) RECEIVES AN ADDITIONAL AMOUNT EACH DAY. SEE PAGE 50 FOR DETAILS.

f ZONE PAY AT THREE DOLLARS ($3.00) PER HOUR, FACTORED AT THE APPLICABLE OVERTIME MULTIPLE, WILL BE ADDED TO THE BASE RATE FOR WORK PERFORMED OUTSIDE THE FREE ZONE DESCRIBED BY THE BOUNDARIES ALONG TOWNSHIP AND RANGE LINES. PLEASE SEE TRAVEL AND SUBSISTENCE PROVISIONS FOR MAP DESCRIPTION AND EXCEPTIONS.

RECOGNIZED HOLIDAYS: HOLIDAYS UPON WHICH THE GENERAL PREVAILING HOURLY WAGE RATE FOR HOLIDAY WORK SHALL BE PAID, SHALL BE ALL HOLIDAYS IN THE COLLECTIVE BARGAINING AGREEMENT, APPLICABLE TO THE PARTICULAR CRAFT, CLASSIFICATION, OR TYPE OF WORKER EMPLOYED ON THE PROJECT, WHICH IS ON FILE WITH THE DIRECTOR OF INDUSTRIAL RELATIONS. IF THE PREVAILING RATE IS NOT BASED ON A COLLECTIVELY BARGAINED RATE, THE HOLIDAYS UPON WHICH THE PREVAILING RATE SHALL BE PAID SHALL BE AS PROVIDED IN SECTION 6700 OF THE GOVERNMENT CODE. YOU MAY OBTAIN THE HOLIDAY PROVISIONS FOR THE CURRENT DETERMINATIONS ON THE INTERNET AT HTTP://WWW.DIR.CA.GOV/OPRL/PWD. HOLIDAY PROVISIONS FOR CURRENT OR SUPERSEDED DETERMINATIONS MAY BE OBTAINED BY CONTACTING THE OFFICE OF THE DIRECTOR – RESEARCH UNIT AT (415) 703-4774.

TRAVEL AND/OR SUBSISTENCE PAYMENT: IN ACCORDANCE WITH LABOR CODE SECTIONS 1773.1 AND 1773.9, CONTRACTORS SHALL MAKE TRAVEL AND/OR SUBSISTENCE PAYMENTS TO EACH WORKER TO EXECUTE THE WORK. YOU MAY OBTAIN THE TRAVEL AND/OR SUBSISTENCE PROVISIONS FOR THE CURRENT DETERMINATIONS ON THE INTERNET AT HTTP://WWW.DIR.CA.GOV/OPRL/PWD. TRAVEL AND/OR SUBSISTENCE REQUIREMENTS FOR CURRENT OR SUPERSEDED DETERMINATIONS MAY BE OBTAINED BY CONTACTING THE OFFICE OF THE DIRECTOR – RESEARCH UNIT AT (415) 703-4774.

DocuSign Envelope ID: 894511EA-295B-49EB-A393-D26A6837FDD4

STATE OF CALIFORNIA EDMUND G. BROWN JR., *Governor*

DEPARTMENT OF INDUSTRIAL RELATIONS
Office of the Director – Research Unit
455 Golden Gate Avenue, 9th Floor
San Francisco, CA 94102

MAILING ADDRESS:
P. O. Box 420603
San Francisco, CA 94142-0603

PREDETERMINED INCREASES FOR

LABORER AND RELATED CLASSIFICATIONS
(Determination NC-23-102-1-2014-3)

LABORER AND RELATED CLASSIFICATIONS (Special Single and Second Shift)
(Determination NC-23-102-1-2014-3A)

IN ALAMEDA, ALPINE, AMADOR, BUTTE, CALAVERAS, COLUSA, CONTRA COSTA, DEL NORTE, EL DORADO, FRESNO, GLENN, HUMBOLDT, KINGS, LAKE, LASSEN, MADERA, MARIN, MARIPOSA, MENDOCINO, MERCED, MODOC, MONTEREY, NAPA, NEVADA, PLACER, PLUMAS, SACRAMENTO, SAN BENITO, SAN FRANCISCO, SAN JOAQUIN, SAN MATEO, SANTA CLARA, SANTA CRUZ, SHASTA, SIERRA, SISKIYOU, SOLANO, SONOMA, STANISLAUS, SUTTER, TEHAMA, TRINITY, TULARE, TUOLUMNE, YOLO AND YUBA COUNTIES

These predetermined increases apply to the above referenced determinations for work being performed on public works projects with bid advertisement dates on or after **September 1, 2014** until this determination is superseded by a new determination or a predetermined increase modification notice becomes effective.

When referencing our prevailing wage determinations, please note that if the prevailing wage rate determination that was in effect on the bid advertisement date of a project has a single asterisk (*) after the expiration date, the rate will be good for the life of the project. However, if a prevailing wage rate determination has double asterisks (**) after the expiration date, the rate must be updated on the following date to reflect the predetermined rate change(s).

LABORERS: All Classifications, and All Shifts

Determinations NC-23-102-1-2014-3 and NC-23-102-1-2014-3A are currently in effect and expire on June 28, 2015**.

Effective June 29, 2015, there will be an increase of $1.40 to be allocated to wages and/or fringes.
Effective June 27, 2016, there will be an increase of $1.50 to be allocated to wages and/or fringes.
Effective June 26, 2017, there will be an increase of $1.60 to be allocated to wages and/or fringes.
Effective June 25, 2018, there will be an increase of $1.65 to be allocated to wages and/or fringes.

There will be no further increases applicable to these determinations.

Issued 8/22/2014, Effective 9/1/2014 until superseded.

This page will updated when wage rate breakdown information becomes available.
Last Updated: September 1, 2014

DocuSign Envelope ID: 894511EA-295B-49EB-A393-D26A6837FDD4

GENERAL PREVAILING WAGE DETERMINATION MADE BY THE DIRECTOR OF INDUSTRIAL RELATIONS PURSUANT TO CALIFORNIA LABOR CODE PART 7, CHAPTER 1, ARTICLE 2, SECTIONS 1770, 1773 AND 1773.1

FOR COMMERCIAL BUILDING, HIGHWAY, HEAVY CONSTRUCTION AND DREDGING PROJECTS

CRAFT: LIGHT FIXTURE MAINTENANCE

DETERMINATION: NC-61-X-6-2014-1
ISSUE DATE: February 22, 2014
EXPIRATION DATE OF DETERMINATION: June 30, 2015* Effective until superseded by a new determination issued by the Director of Industrial Relations. Contact the Office of the Director – Research Unit at (415) 703-4774 for the new rates after ten days after the expiration date if no subsequent determination is issued.

LOCALITY: All localities within Alameda, Alpine, Amador, Butte, Calaveras, Colusa, Contra Costa, El Dorado, Fresno, Glenn, Kings, Lake, Lassen, Madera, Marin, Mendocino, Monterey, Napa, Nevada, Placer, Plumas, Sacramento, San Benito, San Francisco, San Joaquin, San Mateo, Santa Clara, Santa Cruz, Shasta, Sierra, Solano, Sonoma, Sutter, Tehama, Trinity, Tulare, Yolo and Yuba counties.

		Employer Payments				Straight-Time		Overtime Hourly Rate		
Classification (Journeyperson)	Basic Hourly Rate	Health and Welfare	Pension[a]	Vacation and Holiday	Training	Hours	Total Hourly Rate	Daily 1 1/2X	6th & 7th Workday 1 1/2X	Holiday 2X
Fixture Washer: Start	$ 18.58	$9.25	$.56	$.64	--	8	$29.03	$38.600	$38.600	$48.170
3 – 6 Months	20.45	9.25	.61	.71	--	8	31.02	41.550	41.550	52.080
6 Months or More	21.66	9.25	.65	.75	--	8	32.31	43.465	43.465	54.620
Serviceman										
0 – 12 Months	23.79	9.25	.71	.82	--	8	34.57	46.820	46.820	59.070
12 Months or More	25.19	9.25	.76	.87	--	8	36.07	49.045	49.045	62.020

[a] 3% of the Basic Hourly Rate for the National Employees Benefit Fund which is factored at the applicable overtime multiplier.

RECOGNIZED HOLIDAYS: Holidays upon which the general prevailing hourly wage rate for Holiday work shall be paid, shall be all holidays in the collective bargaining agreement, applicable to the particular craft, classification, or type of worker employed on the project, which is on file with the Director of Industrial Relations. If the prevailing rate is not based on a collectively bargained rate, the holidays upon which the prevailing rate shall be paid shall be as provided in Section 6700 of the Government Code. You may obtain the holiday provisions for the current determinations on the Internet at http://www.dir.ca.gov/OPRL/PWD. Holiday provisions for current or superseded determinations may be obtained by contacting the Office of the Director – Research Unit at (415) 703-4774.

TRAVEL AND/OR SUBSISTENCE PAYMENT: In accordance with Labor Code Sections 1773.1 and 1773.9, contractors shall make travel and/or subsistence payments to each worker to execute the work. You may obtain the travel and/or subsistence provisions for the current determinations on the Internet at http://www.dir.ca.gov/OPRL/PWD. Travel and/or subsistence requirements for current or superseded determinations may be obtained by contacting the Office of the Director – Research Unit at (415) 703-4774.

DocuSign Envelope ID: 894511EA-295B-49EB-A393-D26A6837FDD4

GENERAL PREVAILING WAGE DETERMINATION MADE BY THE DIRECTOR OF INDUSTRIAL RELATIONS
PURSUANT TO CALIFORNIA LABOR CODE PART 7, CHAPTER 1, ARTICLE 2, SECTIONS 1770, 1773 AND 1773.1

FOR COMMERCIAL BUILDING, HIGHWAY, HEAVY CONSTRUCTION AND DREDGING PROJECTS

CRAFT: # OPERATING ENGINEER (HEAVY AND HIGHWAY WORK)

DETERMINATION: NC-23-63-1-2014-1
ISSUE DATE: August 22, 2014
EXPIRATION DATE OF DETERMINATION: June 28, 2015** The rate to be paid for work performed after this date has been determined. If work will extend past this date, the new rate must be paid and should be incorporated in contracts entered into now. Contact the Office of the Director – Research Unit for specific rates at (415) 703-4774.

LOCALITY: All localities within Alameda, Alpine, Amador, Butte, Calaveras, Colusa, Contra Costa, Del Norte, El Dorado, Fresno, Glenn, Humboldt, Kings, Lake, Lassen, Madera, Marin, Mariposa, Mendocino, Merced, Modoc, Monterey, Napa, Nevada, Placer, Plumas, Sacramento, San Benito, San Francisco, San Joaquin, San Mateo, Santa Clara, Santa Cruz, Shasta, Sierra, Siskiyou, Solano, Sonoma, Stanislaus, Sutter, Tehama, Trinity, Tulare, Tuolumne, Yolo, and Yuba counties.

Classification (Journeyperson)	Basic Hourly Rate		Employer Payments: Health and Welfare	Pension	Vacation and Holiday[e]	Training	Other Payments	Straight-Time: Hours[f]	Total Hourly Rate		Overtime Hourly Rate: Daily/ Saturday[d] 1 1/2X		Sunday and Holiday 2X	
Classification Group[a]	Area 1[b]	Area 2[c]							Area 1[b]	Area 2[c]	Area 1[b]	Area 2[c]	Area 1[b]	Area 2[c]
Group 1	$39.85	$41.85	$13.03	$10.15	$3.86	$0.67	$0.67	8	$68.23	$70.23	$88.16	$91.16	$108.08	$112.08
Group 2	$38.32	$40.32	$13.03	$10.15	$3.86	$0.67	$0.67	8	$66.70	$68.70	$85.86	$88.86	$105.02	$109.02
Group 3	$36.84	$38.84	$13.03	$10.15	$3.86	$0.67	$0.67	8	$65.22	$67.22	$83.64	$86.64	$102.06	$106.06
Group 4	$35.46	$37.46	$13.03	$10.15	$3.86	$0.67	$0.67	8	$63.84	$65.84	$81.57	$84.57	$99.30	$103.30
Group 5	$34.19	$36.19	$13.03	$10.15	$3.86	$0.67	$0.67	8	$62.57	$64.57	$79.67	$82.67	$96.76	$100.76
Group 6	$32.87	$34.87	$13.03	$10.15	$3.86	$0.67	$0.67	8	$61.25	$63.25	$77.69	$80.69	$94.12	$98.12
Group 7	$31.73	$33.73	$13.03	$10.15	$3.86	$0.67	$0.67	8	$60.11	$62.11	$75.98	$78.98	$91.84	$95.84
Group 8	$30.59	$32.59	$13.03	$10.15	$3.86	$0.67	$0.67	8	$58.97	$60.97	$74.27	$77.27	$89.56	$93.56
Group 8-A	$28.38	$30.38	$13.03	$10.15	$3.86	$0.67	$0.67	8	$56.76	$58.76	$70.95	$73.95	$85.14	$89.14
Group 1-A	$40.73	$42.73	$13.03	$10.15	$3.86	$0.67	$0.67	8	$69.11	$71.11	$89.48	$92.48	$109.84	$113.84
Truck Crane Assistant to Engineer	$33.76	$35.76	$13.03	$10.15	$3.86	$0.67	$0.67	8	$62.14	$64.14	$79.02	$82.02	$95.90	$99.90
Assistant to Engineer	$31.47	$33.47	$13.03	$10.15	$3.86	$0.67	$0.67	8	$59.85	$61.85	$75.59	$78.59	$91.32	$95.32
Group 2-A	$38.97	$40.97	$13.03	$10.15	$3.86	$0.67	$0.67	8	$67.35	$69.35	$86.84	$89.84	$106.32	$110.32
Truck Crane Assistant to Engineer	$33.50	$35.50	$13.03	$10.15	$3.86	$0.67	$0.67	8	$61.88	$63.88	$78.63	$81.63	$95.38	$99.38
Assistant to Engineer	$31.26	$33.26	$13.03	$10.15	$3.86	$0.67	$0.67	8	$59.64	$61.64	$75.27	$78.27	$90.90	$94.90
Group 3-A	$37.23	$39.23	$13.03	$10.15	$3.86	$0.67	$0.67	8	$65.61	$67.61	$84.23	$87.23	$102.84	$106.84
Truck Crane Assistant to Engineer	$33.26	$35.26	$13.03	$10.15	$3.86	$0.67	$0.67	8	$61.64	$63.64	$78.27	$81.27	$94.90	$98.90
Hydraulic	$32.87	$34.87	$13.03	$10.15	$3.86	$0.67	$0.67	8	$61.25	$63.25	$77.69	$80.69	$94.12	$98.12
Assistant to Engineer	$30.98	$32.98	$13.03	$10.15	$3.86	$0.67	$0.67	8	$59.36	$61.36	$74.85	$77.85	$90.34	$94.34
Group 4-A	$34.19	$36.19	$13.03	$10.15	$3.86	$0.67	$0.67	8	$62.57	$64.57	$79.67	$82.67	$96.76	$100.76

# Indicates an apprenticeable craft. The current apprentice wage rates are available on the Internet at http://www.dir.ca.gov/OPRL/PWAppWage/PWAppWageStart.asp. To obtain any apprentice wage rates as of July 1, 2008 and prior to September 27, 2012, please contact the Division of Apprenticeship Standards or refer to the Division of Apprenticeship Standards' website at http://www.dir.ca.gov/das/das.html.

[a] For classifications within each group, see pages 39B-40.

[b] **AREA 1** - Alameda, Butte, Contra Costa, Kings, Marin, Merced, Napa, Sacramento, San Benito, San Francisco, San Joaquin, San Mateo, Santa Clara, Santa Cruz, Solano, Stanislaus, Sutter, Yolo and Yuba counties; and portions of Alpine, Amador, Calaveras, Colusa, Del Norte, El Dorado, Fresno, Glenn, Humboldt, Lake, Lassen, Madera, Mariposa, Mendocino, Monterey, Nevada, Placer, Plumas, Shasta, Sierra, Siskiyou, Sonoma, Tehama, Tulare, Tuolumne and Trinity counties.

[c] **AREA 2** - Modoc, and portions of Alpine, Amador, Calaveras, Colusa, Del Norte, El Dorado, Fresno, Glenn, Humboldt, Lake, Lassen, Madera, Mariposa, Mendocino, Monterey, Nevada, Placer, Plumas, Shasta, Sierra, Siskiyou, Sonoma, Tehama, Tulare, Tuolumne and Trinity counties. (Portions of counties falling in each area detailed on page 41).

[d] Saturday in the same work week may be worked at straight-time if a job is shut down during the normal work week due to inclement weather.

[e] Includes an amount for supplemental dues.

[f] When three shifts are employed for five (5) or more consecutive days, seven and one-half (7 1/2) consecutive hours (exclusive of meal period), shall constitute a day of work, for which eight (8) times the straight time hourly rate shall be paid at the non-shift wage rate for the second shift. The third shift shall be seven (7) hours of work for eight (8) hours of pay at the non-shift wage rate.

NOTE: For Special Single and Second Shift rates, please see page 39A.

RECOGNIZED HOLIDAYS: Holidays upon which the general prevailing hourly wage rate for Holiday work shall be paid, shall be all holidays in the collective bargaining agreement, applicable to the particular craft, classification, or type of worker employed on the project, which is on file with the Director of Industrial Relations. If the prevailing rate is not based on a collectively bargained rate, the holidays upon which the prevailing rate shall be paid shall be as provided in Section 6700 of the Government Code. You may obtain the holiday provisions for the current determinations on the Internet at http://www.dir.ca.gov/OPRL/PWD. Holiday provisions for current or superseded determinations may be obtained by contacting the Office of the Director – Research Unit at (415) 703-4774.

TRAVEL AND/OR SUBSISTENCE PAYMENT: In accordance with Labor Code Sections 1773.1 and 1773.9, contractors shall make travel and/or subsistence payments to each worker to execute the work. You may obtain the travel and/or subsistence provisions for the current determinations on the Internet at http://www.dir.ca.gov/OPRL/PWD. Travel and/or subsistence requirements for current or superseded determinations may be obtained by contacting the Office of the Director – Research Unit at (415) 703-4774

DocuSign Envelope ID: 894511EA-295B-49EB-A393-D26A6837FDD4

DETERMINATION: NC-23-63-1-2014-1

CLASSIFICATIONS

GROUP 1
Drill Equipment, over 200,000 lbs
Operator of Helicopter (when used in erection work)
Hydraulic Excavator 7 cu yds and over
Power Shovels, over 7 cu yds

GROUP 2
Highline Cableway
Hydraulic Excavator 3 1/2 cu yds up to 7 cu yds
Licensed Construction Work Boat Operator, On Site
Microtunneling Machine
Power Blade Operator (finish)
Power Shovels, (over 1 cu yd and up to and including 7 cu yds m.r.c.)

GROUP 3
Asphalt Milling Machine
Cable Backhoe
Combination Backhoe and Loader over ¾ cu yds
Continuous Flight Tie Back Machine
Crane Mounted Continuous Flight Tie Back Machine, tonnage to apply
Crane Mounted Drill Attachments, Tonnage to apply
Dozer, Slope Board
Drill Equipment, over 100,000 lbs up to and including 200,000 lbs
Gradall
Hydraulic Excavator up to 3 1/2 cu yds
Loader 4 cu yds and over
Long Reach Excavator
Multiple Engine Scrapers (when used as push pull)
Power Shovels, up to and including 1 cu yd
Pre-Stress Wire Wrapping machine
Side Boom Cat, 572 or larger
Track Loader 4 cu yds and over
Wheel Excavator (up to and including 750 cu yds per hour)

GROUP 4
Asphalt Plant Engineer/Boxman
Chicago Boom
Combination Backhoe and Loader up to and including ¾ cu yds
Concrete Batch Plants (wet or dry)
Dozer and/or Push Cat
Drill Equipment, over 50,000 lbs up to and including 100,000 lbs
Pull-Type Elevating Loader
Gradesetter, Grade Checker (GPS, mechanical or otherwise)
Grooving and Grinding Machine
Heading Shield Operator
Heavy Duty Drilling Equipment, Hughes, LDH, Watson 3000 or similar
Heavy Duty Repairman and/or Welder
Lime Spreader
Loader under 4 cu yds
Lubrication and Service Engineer (mobile and grease rack)
Mechanical Finishers or Spreader Machine (asphalt, Barber-Greene and similar)
Miller Formless M-9000 Slope Paver or similar
Portable Crushing and Screening plants
Power Blade Support
Roller Operator, Asphalt
Rubber-Tired Scraper, Self-Loading (paddle-wheels, etc)
Rubber-Tired Earthmoving Equipment (Scrapers)
Slip Form Paver (concrete)
Small Tractor with Drag
Soil Stabilizer (P&H or equal)
Spider Plow and Spider Puller
Timber Skidder
Track Loader up to 4 yards
Tractor Drawn Scraper
Tractor, Compressor Drill Combination
Tubex Pile Rig
Unlicensed Construction Work Boat Operator, On Site
Welder
Woods-Mixer (and other similar Pugmill equipment)

GROUP 5
Cast-In Place Pipe Laying Machine
Combination Slusher and Motor Operator
Concrete Conveyor or Concrete Pump, Truck or Equipment Mounted
Concrete Conveyor, Building Site
Concrete Pump or Pumpcrete Guns
Drilling Equipment, Watson 2000, Texoma 700 or similar
Drilling and Boring Machinery, Horizontal (not to apply to waterlines, wagon drills or jackhammers)
Concrete Mixers/all
Man and/or Material Hoist
Mechanical Finishers (concrete) (Clary, Johnson, Bidwell Bridge Deck or similar types)
Mechanical Burm, Curb and/or Curb and Gutter Machine, Concrete or Asphalt
Mine or Shaft Hoist
Portable Crushers
Power Jumbo Operator (setting slip-forms, etc., in tunnels)
Screedman (automatic or manual)
Self Propelled Compactor with Dozer
Tractor with boom, D6 or smaller
Trenching Machine, maximum digging capacity over 5 ft. depth
Vermeer T-600B Rock Cutter or similar

GROUP 6
Armor-Coater (or similar)
Ballast Jack Tamper
Boom-Type Backfilling Machine
Asst. Plant Engineer
Bridge and/or Gantry Crane
Chemical Grouting Machine, truck mounted
Chip Spreading Machine Operator
Concrete Barrier Moving Machine
Concrete Saws (self-propelled unit on streets, highways, airports, and canals)
Deck Engineer
Drill Doctor
Drill Equipment, over 25,000 lbs up to and including 50,000 lbs
Drilling Equipment Texoma 600, Hughes 200 series or similar up to and including 30 ft. m.r.c.
Helicopter Radioman
Hydro-Hammer or similar
Line Master
Skidsteer Loader, Bobcat larger than 743 series or similar (with attachments)
Locomotive
Rotating Extendable Forklift, Lull Hi-Lift or similar
Assistant to Engineer, Truck Mounted Equipment
Pavement Breaker, Truck Mounted, with compressor combination
Paving Fabric Installation and/or Laying Machine
Pipe Bending Machine (pipelines only)
Pipe Wrapping Machine (Tractor propelled and supported)
Screedman, (except asphaltic concrete paving)
Self-Loading Chipper
Self Propelled Pipeline Wrapping Machine
Tractor

GROUP 7
Ballast Regulator
Cary Lift or similar
Combination Slurry Mixer and/or Cleaner
Coolant/Slurry Tanker Operator (hooked to Grooving/Grinding Machine)
Drilling Equipment, 20 ft and under m.r.c.
Drill Equipment, over 1,000 lbs up to and including 25,000 lbs
Fireman Hot Plant
Grouting Machine Operator
Highline Cableway Signalman
Stationary Belt Loader (Kolman or similar)
Lift Slab Machine (Vagtborg and similar types)
Maginnes Internal Full Slab Vibrator
Material Hoist (1 Drum)
Mechanical Trench Shield
Partsman (heavy duty repair shop parts room)
Pavement Breaker with or without Compressor Combination
Pipe Cleaning Machine (tractor propelled and supported)
Post Driver
Roller (except Asphalt), Chip Seal
Self Propelled Automatically Applied Concrete Curing Machine (on streets, highways, airports and canals)
Self Propelled Compactor (without dozer)
Signalman
Slip-Form Pumps (lifting device for concrete forms)
Super Sucker Vacuum Truck
Tie Spacer
Trenching Machine (maximum digging capacity up) to and including 5 ft depth
Truck-Mounted Rotating Telescopic Boom Type Lifting Device, Manitex or similar (Boom Truck) - Under 15 tons
Truck Type Loader

GROUP 8
Bit Sharpener
Boiler Tender
Box Operator
Brakeman
Combination Mixer and Compressor (shotcrete/gunite)
Compressor Operator
Deckhand
Fireman
Generators
Gunite/Shotcrete Equipment Operator
Heavy Duty Repairman Helper
Hydraulic Monitor
Ken Seal Machine (or similar)
Mast Type Forklift
Mixermobile
Assistant to Engineer
Pump Operator
Refrigerator Plant
Reservoir-Debris Tug (Self-Propelled Floating)
Ross Carrier (Construction site)
Rotomist Operator
Self Propelled Tape Machine
Shuttlecar
Self Propelled Power Sweeper Operator (Includes Vacuum Sweeper)
Slusher Operator
Surface Heater
Switchman
Tar Pot Fireman
Tugger Hoist, Single Drum
Vacuum Cooling Plant
Welding Machine (powered other than by electricity)

DocuSign Envelope ID: 894511EA-295B-49EB-A393-D26A6837FDD4

DETERMINATION: NC-23-63-1-2014-1

GROUP 8-A
Articulated Dump Truck Operator
Elevator Operator
Mini Excavator under 25 H.P. (Backhoe-Trencher)
Skidsteer Loader, Bobcat 743 series or Smaller and similar (without attachments)

GROUP 1-A
Clamshells and Draglines over 7 cu yds
Cranes over 100 tons
Derrick, over 100 tons
Derrick Barge Pedestal mounted over 100 tons
Self Propelled Boom Type Lifting Device Over 100 tons

GROUP 2-A
Clamshells and Draglines over 1 cu yds up to and including 7 cu yds
Cranes over 45 tons up to and including 100 tons
Derrick Barge 100 tons and under
Mobile Self-Erecting Tower Crane (Potain) over 3 stories
Self Propelled Boom Type Lifting Device over 45 tons
Tower Cranes

GROUP 3-A
Clamshells and Draglines up to and including 1 cu yd
Cranes 45 tons and under
Mobile Self-Erecting Tower Crane (Potain), 3 stories and under
Self Propelled Boom Type Lifting Device 45 tons and under

GROUP 4-A
Boom Truck or dual-purpose A-Frame Truck, Non-Rotating over 15 tons.
Truck Mounted Rotating Telescopic Boom Type Lifting Device, Manitex or similar (Boom Truck -over 15 tons)
Truck-Mounted Rotating Telescopic Boom Type Lifting Device, Munitex or Similar (Boom Truck), under 15 tons

DocuSign Envelope ID: 894511EA-295B-49EB-A393-D26A6837FDD4

DESCRIPTION FOR AREAS 1 AND 2:

Area 1 is all of Northern California within the following Township, State and/or county Boundaries:

Commencing in the Pacific Ocean on the extension of the Southerly line of Township 19S, of the Mount Diablo Base and Meridian,
Thence Easterly along the Southerly line of Township 19S, to the Northwest corner of Township 20S, Range 6E,
Thence Southerly to the Southwest corner of Township 20S, Range 6E,
Thence Easterly to the Northwest corner of Township 21S, Range 7E Thence Southerly to the Southwest corner of Township 21S, Range 7E
Thence Easterly to the Northwest corner of Township 22S, Range 9E,
Thence Southerly to the Southwest corner of Township 22S, Range 9E,
Thence Easterly to the Northwest corner of Township 23S, Range 10E,
Thence Southerly to the Southwest corner of Township 24S, Range 10E,
Thence Easterly to the Southwest corner of Township 24S, Range 31E,
Thence Northerly to the Northeast corner of Township 20S, Range 31E
Thence Westerly to the Southeast corner of Township 19S, Range 29E,
Thence Northerly to the Northeast corner of Township 17S, Range 29E,
Thence Westerly to the Southeast corner of Township 16S, Range 28E,
Thence Northerly to the Northeast corner of Township 13S, Range 28E,
Thence Westerly to the Southeast corner Township 12S, Range 27E,
Thence Northerly to the Northeast corner of Township 12S, Range 27E,
Thence Westerly to the Southeast corner of Township 11S, Range 26E,
Thence Northerly to the Northeast corner of Township 11S, Range 26E,
Thence Westerly to the Southeast corner of Township 10S, Range 25E,
Thence Northerly to the Northeast corner of Township 9S, Range 25E,
Thence Westerly to the Southeast corner of Township 8S, Range 24E,
Thence Northerly to the Northeast corner of Township 8S, Range 24E,
Thence Westerly to the Southeast corner of Township 7S, Range 23E,
Thence Northerly to the Northeast corner of Township 6S, Range 23E,
Thence Westerly to the Southeast corner of Township 5S, Range 20E,
Thence Northerly to the Northeast corner of Township 5S, Range 20E,
Thence Westerly to the Southeast corner of Township 4S, Range 19E,
Thence Northerly to the Northeast corner of Township 1S, Range 19E,
Thence Westerly to the Southeast corner of Township 1N, Range 18E,
Thence Northerly to the Northeast corner of Township 3N, Range 18E,
Thence Westerly to the Southeast corner of Township 4N, Range 17E,
Thence Northerly to the Northeast corner of Township 4N, Range 17E,
Thence Westerly to the Southeast corner of Township 5N, Range 15E,
Thence Northerly to the Northeast corner of Township 5N, Range 15E,
Thence Westerly to the Southeast corner of Township 6N, Range 14E,
Thence Northerly to the Northeast corner of Township 10N, Range 14E,
Thence Easterly along the Southern line of Township 11N, to the California / Nevada State Border,
Thence Northerly along the California / Nevada State Border to the Northerly line of Township 17N,
Thence Westerly to the Southeast corner of Township 18N, Range 10E,
Thence Northerly to the Northeast corner of Township 20N, Range 10E,
Thence Westerly to the Southeast corner of Township 21N, Range 9E,
Thence Northerly to the Northeast corner of Township 21N, Range 9E,
Thence Westerly to the Southeast corner of Township 22N, Range 8E,
Thence Northerly to the Northeast corner of Township 22N, Range 8E,
Thence Westerly to the Northwest corner of Township 22N, Range 8E,
Thence Northerly to the Southwest corner of Township 27N, Range 8E,
Thence Easterly to the Southeast corner of Township 27N, Range 8E,
Thence Northerly to the Northeast corner of Township 28N, Range 8E,
Thence Westerly to the Southeast corner of Township 29N, Range 6E,
Thence Northerly to the Northeast corner of Township 32N, Range 6E,
Thence Westerly to the Northwest corner of Township 32 N, Range 6E,
Thence Northerly to the Northeast corner of Township 35N, Range 5E,
Thence Westerly to the Southeast corner of Township 36N, Range 3E,
Thence Northerly to the Northeast corner of township 36N, Range 3E,
Thence Westerly to the Southeast corner of Township 37N, Range 1W,
Thence Northerly to the Northeast corner of Township 38N, Range 1W,
Thence Westerly to the Southeast corner of Township 39N, Range 2W,
Thence Northerly to the Northeast corner of Township 40N, Range 2W,
Thence Westerly to the Southeast corner of Township 41N, Range 4W,
Thence Northerly to the Northeast corner of Township 42N, Range 4W,
Thence Westerly to the Southeast corner of Township 43N, Range 5W,
Thence Northerly to the California / Oregon State Border,
Thence Westerly along the California / Oregon State Border to the Westerly Boundary of Township Range 8W,
Thence Southerly to the Southwest corner of Township 43N, Range 8W,
Thence Easterly to the Southeast corner of Township 43N, Range 8W,
Thence Southerly to the Southwest corner of Township 42N, Range 7W,
Thence Easterly to the Southeast corner of Township 42N, Range 7W,
Thence Southerly to the Southwest corner of Township 41N, Range 6W,
Thence Easterly to the Northwest corner of Township 40N, Range 5W,
Thence Southerly to the Southwest corner of Township 38N, Range 5W,
Thence Westerly to the Northwest corner of Township 37N, Range 6W,
Thence Southerly to the Southwest corner of Township 35N, Range 6W,
Thence Westerly to the Northwest corner of Township 34N, Range 10W,
Thence Southerly to the Southwest corner of Township 31N, Range 10W,
Thence Easterly to the Northwest corner of Township 30N, Range 9W,
Thence Southerly to the Southwest corner of Township 30N, Range 9W,
Thence Easterly to the Northwest corner of Township 29N, Range 8W,
Thence Southerly to the Southwest corner of Township 23N, Range 8W,
Thence Easterly to the Northwest corner of Township 22N, Range 6W,
Thence Southerly to the Southwest corner of Township 16N, Range 6W,
Thence Westerly to the Southeast corner of Township 16N, Range 9W,
Thence Northerly to the Northeast corner of Township 16N, Range 9W,
Thence Westerly to the Southeast. corner of Township 17N, Range 12W,
Thence Northerly to the Northeast corner of Township 18N, Range 12W,
Thence Westerly to the Northwest corner of Township 18N, Range 15W,
Thence Southerly to the Southwest corner of Township 14N, Range 15W,
Thence Easterly to the Northwest corner of Township 13N, Range 14W,
Thence Southerly to the Southwest corner of Township 13N, Range 14W,
Thence Easterly to the Northwest corner of Township 12N, Range 13W,
Thence Southerly to the Southwest corner of Township 12N, Range 13W,
Thence Easterly to the Northwest corner of Township 11N, Range 12W,
Thence Southerly into the Pacific Ocean and Commencing in the Pacific Ocean on the extension of the Humboldt Base Line,
Thence Easterly to the Northwest corner of Township 1S, Range 2E,
Thence Southerly to the Southwest corner of Township 2S, Range 2E,
Thence Easterly to the Northwest corner of Township 3S, Range 3E,
Thence Southerly to the Southwest corner of Township 5S, Range 3E,
Thence Easterly to the Southeast corner of Township 5S, Range 4E,
Thence Northerly to the Northeast corner of Township 4S, Range 4E,
Thence Westerly to the Southeast corner of Township 3S, Range 3E,
Thence Northerly to the Northeast corner of Township 5N, Range 3E,
Thence Easterly to the Southeast corner of Township 6N, Range 5E,
Thence Northerly to the Northeast corner of Township 7N, Range 5E,
Thence Westerly to the Southeast corner of Township 8N, Range 3E,
Thence Northerly to the Northeast corner of Township 9N, Range 3E,
Thence Westerly to the Southeast corner of Township 10N, Range 1E,
Thence Northerly to the Northeast corner of Township 13N, Range 1E,
Thence Westerly into the Pacific Ocean, excluding that portion of Northern California contained within the following lines:
Commencing at the Southwest corner of Township 12N, Range 11E, of the Mount Diablo Base and Meridian,
Thence Easterly to the Southeast corner of Township 12N, Range 16E,
Thence Northerly to the Northeast corner of Township 12N, Range 16E,
Thence Westerly to the Southeast corner of Township 13N, Range 15E,
Thence Northerly to the Northeast corner of Township 13N, Range 15E,
Thence Westerly to the Southeast corner of Township 14N, Range 14E,
Thence Northerly to the Northeast corner of Township 16N, Range 14E,
Thence Westerly to the Northwest corner of Township 16N, Range 12E,
Thence Southerly to the Southwest corner of Township 16N, Range 12E,
Thence Westerly to the Northwest corner of Township 15N, Range 11E,
Thence Southerly to the point of beginning at the Southwest corner of Township 12N, Range 11E,

Area 2 shall be all areas not part of Area 1 described above.

DocuSign Envelope ID: 894511EA-295B-49EB-A393-D26A6837FDD4

GENERAL PREVAILING WAGE DETERMINATION MADE BY THE DIRECTOR OF INDUSTRIAL RELATIONS
PURSUANT TO CALIFORNIA LABOR CODE PART 7, CHAPTER 1, ARTICLE 2, SECTIONS 1770, 1773 AND 1773.1

FOR COMMERCIAL BUILDING, HIGHWAY, HEAVY CONSTRUCTION AND DREDGING PROJECTS

CRAFT: # OPERATING ENGINEER (HEAVY AND HIGHWAY WORK)
(SPECIAL SINGLE AND SECOND SHIFT)

DETERMINATION: NC-23-63-1-2014-1
ISSUE DATE: August 22, 2014
EXPIRATION DATE OF DETERMINATION: June 28, 2015** The rate to be paid for work performed after this date has been determined. If work will extend past this date, the new rate must be paid and should be incorporated in contracts entered into now. Contact the Office of the Director – Research Unit for specific rates at (415) 703-4774.

LOCALITY: All localities within Alameda, Alpine, Amador, Butte, Calaveras, Colusa, Contra Costa, Del Norte, El Dorado, Fresno, Glenn, Humboldt, Kings, Lake, Lassen, Madera, Marin, Mariposa, Mendocino, Merced, Modoc, Monterey, Napa, Nevada, Placer, Plumas, Sacramento, San Benito, San Francisco, San Joaquin, San Mateo, Santa Clara, Santa Cruz, Shasta, Sierra, Siskiyou, Solano, Sonoma, Stanislaus, Sutter, Tehama, Trinity, Tulare, Tuolumne, Yolo, and Yuba counties.

			Employer Payments					Straight-Time			Overtime Hourly Rate			
Classification (Journeyperson)	Basic Hourly Rate		Health and Welfare	Pension	Vacation and Holiday[e]	Training	Other Payments	Hours	Total Hourly Rate		Daily/ Saturday[d] 1 1/2X		Sunday and Holiday 2X	
Classification Group[a]	Area 1[b]	Area 2[c]							Area 1[b]	Area 2[c]	Area 1[b]	Area 2[c]	Area 1[b]	Area 2[c]
Group 1	$44.18	$46.18	$13.03	$10.15	$3.86	$0.67	$0.67	8	$72.56	$74.56	$94.65	$97.65	$116.74	$120.74
Group 2	$42.45	$44.45	$13.03	$10.15	$3.86	$0.67	$0.67	8	$70.83	$72.83	$92.06	$95.06	$113.28	$117.28
Group 3	$40.79	$42.79	$13.03	$10.15	$3.86	$0.67	$0.67	8	$69.17	$71.17	$89.57	$92.57	$109.96	$113.96
Group 4	$39.23	$41.23	$13.03	$10.15	$3.86	$0.67	$0.67	8	$67.61	$69.61	$87.23	$90.23	$106.84	$110.84
Group 5	$37.81	$39.81	$13.03	$10.15	$3.86	$0.67	$0.67	8	$66.19	$68.19	$85.10	$88.10	$104.00	$108.00
Group 6	$36.31	$38.31	$13.03	$10.15	$3.86	$0.67	$0.67	8	$64.69	$66.69	$82.85	$85.85	$101.00	$105.00
Group 7	$35.03	$37.03	$13.03	$10.15	$3.86	$0.67	$0.67	8	$63.41	$65.41	$80.93	$83.93	$98.44	$102.44
Group 8	$33.76	$35.76	$13.03	$10.15	$3.86	$0.67	$0.67	8	$62.14	$64.14	$79.02	$82.02	$95.90	$99.90
Group 8-A	$31.25	$33.25	$13.03	$10.15	$3.86	$0.67	$0.67	8	$59.63	$61.63	$75.26	$78.26	$90.88	$94.88
Group 1-A	$45.16	$47.16	$13.03	$10.15	$3.86	$0.67	$0.67	8	$73.54	$75.54	$96.12	$99.12	$118.70	$122.70
Truck Crane Assistant to Engineer	$37.33	$39.33	$13.03	$10.15	$3.86	$0.67	$0.67	8	$65.71	$67.71	$84.38	$87.38	$103.04	$107.04
Assistant to Engineer	$34.74	$36.74	$13.03	$10.15	$3.86	$0.67	$0.67	8	$63.12	$65.12	$80.49	$83.49	$97.86	$101.86
Group 2-A	$43.17	$45.17	$13.03	$10.15	$3.86	$0.67	$0.67	8	$71.55	$73.55	$93.14	$96.14	$114.72	$118.72
Truck Crane Assistant to Engineer	$37.04	$39.04	$13.03	$10.15	$3.86	$0.67	$0.67	8	$65.42	$67.42	$83.94	$86.94	$102.46	$106.46
Assistant to Engineer	$34.51	$36.51	$13.03	$10.15	$3.86	$0.67	$0.67	8	$62.89	$64.89	$80.15	$83.15	$97.40	$101.40
Group 3-A	$41.21	$43.21	$13.03	$10.15	$3.86	$0.67	$0.67	8	$69.59	$71.59	$90.20	$93.20	$110.80	$114.80
Truck Crane Assistant to Engineer	$36.77	$38.77	$13.03	$10.15	$3.86	$0.67	$0.67	8	$65.15	$67.15	$83.54	$86.54	$101.92	$105.92
Hydraulic	$36.31	$38.31	$13.03	$10.15	$3.86	$0.67	$0.67	8	$64.69	$66.69	$82.85	$85.85	$101.00	$105.00
Assistant to Engineer	$34.20	$36.20	$13.03	$10.15	$3.86	$0.67	$0.67	8	$62.58	$64.58	$79.68	$82.68	$96.78	$100.78
Group 4-A	$37.81	$39.81	$13.03	$10.15	$3.86	$0.67	$0.67	8	$66.19	$68.19	$85.10	$88.10	$104.00	$108.00

# Indicates an apprenticeable craft. The current apprentice wage rates are available on the Internet at http://www.dir.ca.gov/OPRL/PWAppWage/PWAppWageStart.asp. To obtain any apprentice wage rates as of July 1, 2008 and prior to September 27, 2012, please contact the Division of Apprenticeship Standards or refer to the Division of Apprenticeship Standards' website at http://www.dir.ca.gov/das/das.html.

[a] For classifications within each group, see pages 39B-40.

[b] **AREA 1** - Alameda, Butte, Contra Costa, Kings, Marin, Merced, Napa, Sacramento, San Benito, San Francisco, San Joaquin, San Mateo, Santa Clara, Santa Cruz, Solano, Stanislaus, Sutter, Yolo and Yuba counties; and portions of Alpine, Amador, Calaveras, Colusa, Del Norte, El Dorado, Fresno, Glenn, Humboldt, Lake, Lassen, Madera, Mariposa, Mendocino, Monterey, Nevada, Placer, Plumas, Shasta, Sierra, Siskiyou, Sonoma, Tehama, Tulare, Tuolumne and Trinity counties.

[c] **AREA 2** - Modoc, and portions of Alpine, Amador, Calaveras, Colusa, Del Norte, El Dorado, Fresno, Glenn, Humboldt, Lake, Lassen, Madera, Mariposa, Mendocino, Monterey, Nevada, Placer, Plumas, Shasta, Sierra, Siskiyou, Sonoma, Tehama, Tulare, Tuolumne and Trinity counties. (Portions of counties falling in each area detailed on page 41).

[d] Saturday in the same work week may be worked at straight-time if a job is shut down during the normal work week due to inclement weather.

[e] Includes an amount for supplemental dues.

RECOGNIZED HOLIDAYS: Holidays upon which the general prevailing hourly wage rate for Holiday work shall be paid, shall be all holidays in the collective bargaining agreement, applicable to the particular craft, classification, or type of worker employed on the project, which is on file with the Director of Industrial Relations. If the prevailing rate is not based on a collectively bargained rate, the holidays upon which the prevailing rate shall be paid shall be as provided in Section 6700 of the Government Code. You may obtain the holiday provisions for the current determinations on the Internet at http://www.dir.ca.gov/OPRL/PWD. Holiday provisions for current or superseded determinations may be obtained by contacting the Office of the Director – Research Unit at (415) 703-4774.

TRAVEL AND/OR SUBSISTENCE PAYMENT: In accordance with Labor Code Sections 1773.1 and 1773.9, contractors shall make travel and/or subsistence payments to each worker to execute the work. You may obtain the travel and/or subsistence provisions for the current determinations on the Internet at http://www.dir.ca.gov/OPRL/PWD. Travel and/or subsistence requirements for current or superseded determinations may be obtained by contacting the Office of the Director – Research Unit at (415) 703-4774.

DocuSign Envelope ID: 894511EA-295B-49EB-A393-D26A6837FDD4

STATE OF CALIFORNIA Edmund G. Brown Jr., *Governor*

DEPARTMENT OF INDUSTRIAL RELATIONS
Office of the Director – Research Unit
455 Golden Gate Avenue, 9th Floor
San Francisco, CA 94102

MAILING ADDRESS:
P. O. Box 420603
San Francisco, CA 94142-0603

PREDETERMINED INCREASES FOR

OPERATING ENGINEER (HEAVY & HIGHWAY WORK) (NC-23-63-1-2014-1)

OPERATING ENGINEER (BUILDING CONSTRUCTION) (NC-23-63-1-2014-1A)

PILE DRIVER (OPERATING ENGINEER – HEAVY & HIGHWAY WORK) (NC-23-63-1-2014-1B)

PILE DRIVER (OPERATING ENGINEER – BUILDING CONSTRUCTION) (NC-23-63-1-2014-1B1)

STEEL ERECTOR AND FABRICATOR (OPERATING ENGINEER – HEAVY & HIGHWAY WORK) (NC-23-63-1-2014-1D)

STEEL ERECTOR AND FABRICATOR (OPERATING ENGINEER – BUILDING CONSTRUCTION) (NC-23-63-1-2014-1D1)

TUNNEL/UNDERGROUND (OPERATING ENGINEER – HEAVY AND HIGHWAY WORK) (NC-23-63-1-2014-1C)

ALL LOCALITIES WITHIN ALAMEDA[1], ALPINE, AMADOR, BUTTE, CALAVERAS, COLUSA, CONTRA COSTA[1], DEL NORTE, EL DORADO, FRESNO, GLENN, HUMBOLDT, KINGS, LAKE, LASSEN, MADERA, MARIN[1], MARIPOSA, MENDOCINO, MERCED, MODOC, MONTEREY, NAPA, NEVADA, PLACER, PLUMAS, SACRAMENTO, SAN BENITO, SAN FRANCISCO[1], SAN JOAQUIN, SAN MATEO[1], SANTA CLARA[1], SANTA CRUZ, SHASTA, SIERRA, SISKIYOU, SOLANO[1], SONOMA, STANISLAUS, SUTTER, TEHAMA, TRINITY, TULARE, TUOLUMNE, YOLO, AND YUBA COUNTIES

[1] *County not covered by Operating Engineer (Building Construction), Steel Erector and Fabricator (Operating Engineer – Building Construction), and Pile Driver (Operating Engineer – Building Construction).*

This predetermined increase(s) for the above named craft(s) applies only to the current determination for work being performed on public works projects with bid advertisement dates on or after **September 1, 2014**, until the determination(s) is/are superseded by a new determination or a predetermined increase modification notice becomes effective.

DocuSign Envelope ID: 894511EA-295B-49EB-A393-D26A6837FDD4

When referencing our prevailing wage determinations, please note that if the prevailing wage rate determination which was in effect on the bid advertisement date of a project has a single asterisk (*) after the expiration date, the rate will be good for the life of the project. However, if a prevailing wage rate determination has double asterisks (**) after the expiration date, the rate must be updated on the following date to reflect the predetermined rate change(s).

OPERATING ENGINEER: All Classifications (Areas 1 and 2), and All Shifts
The above Determinations are currently in effect and expire on June 28, 2015**.

Effective June 29, 2015, there will be an increase of $2.10 to be allocated to wages and/or fringe benefits.

There will be no further increases applicable to these determinations.

Issued 8/22/2014, Effective 9/1/2014 until superseded.

This page will be updated when wage rate breakdown information becomes available.
Last Updated: 9/1/2014

DocuSign Envelope ID: 894511EA-295B-49EB-A393-D26A6837FDD4

GENERAL PREVAILING WAGE DETERMINATION MADE BY THE DIRECTOR OF INDUSTRIAL RELATIONS
PURSUANT TO CALIFORNIA LABOR CODE PART 7, CHAPTER 1, ARTICLE 2, SECTIONS 1770, 1773 AND 1773.1

FOR COMMERCIAL BUILDING, HIGHWAY, HEAVY CONSTRUCTION AND DREDGING PROJECTS

CRAFT: #STEEL ERECTOR AND FABRICATOR (OPERATING ENGINEER-HEAVY AND HIGHWAY WORK)[c]

DETERMINATION: NC-23-63-1-2014-1D
ISSUE DATE: August 22, 2014
EXPIRATION DATE OF DETERMINATION: June 28, 2015** The rate to be paid for work performed after this date has been determined. If work will extend past this date, the new rate must be paid and should be incorporated in contracts entered into now. Contact the Office of the Director – Research Unit for specific rates at (415) 703-4774.

LOCALITY: All localities within Alameda, Alpine, Amador, Butte, Calaveras, Colusa, Contra Costa, Del Norte, El Dorado, Fresno, Glenn, Humboldt, Kings, Lake, Lassen, Madera, Marin, Mariposa, Mendocino, Merced, Modoc, Monterey, Napa, Nevada, Placer, Plumas, Sacramento, San Benito, San Francisco, San Joaquin, San Mateo, Santa Clara, Santa Cruz, Shasta, Sierra, Siskiyou, Solano, Sonoma, Stanislaus, Sutter, Tehama, Trinity, Tulare, Tuolumne, Yolo, and Yuba counties.

			Employer Payments				Straight-Time		Overtime Hourly Rate		
Classification (Journeyperson)	Basic Hourly Rate	Health and Welfare	Pension	Vacation and Holiday[d]	Training	Other Payments	Hours[e]	Total Hourly Rate	Daily[b] 1 1/2X	Saturday[a&b] 1 1/2X	Sunday and Holiday 2X
Group 1	$41.70	$13.03	$10.15	$3.86	$0.67	$0.67	8	$70.08	$90.93	$90.93	$111.78
Truck Crane Assistant to Engineer	$34.38	$13.03	$10.15	$3.86	$0.67	$0.67	8	$62.76	$79.95	$79.95	$97.14
Assistant to Engineer	$32.15	$13.03	$10.15	$3.86	$0.67	$0.67	8	$60.53	$76.61	$76.61	$92.68
Group 2	$39.93	$13.03	$10.15	$3.86	$0.67	$0.67	8	$68.31	$88.28	$88.28	$108.24
Truck Crane Assistant to Engineer	$34.16	$13.03	$10.15	$3.86	$0.67	$0.67	8	$62.54	$79.62	$79.62	$96.70
Assistant to Engineer	$31.88	$13.03	$10.15	$3.86	$0.67	$0.67	8	$60.26	$76.20	$76.20	$92.14
Group 3	$38.45	$13.03	$10.15	$3.86	$0.67	$0.67	8	$66.83	$86.06	$86.06	$105.28
Truck Crane Assistant to Engineer	$33.89	$13.03	$10.15	$3.86	$0.67	$0.67	8	$62.27	$79.22	$79.22	$96.16
Hydraulic	$33.50	$13.03	$10.15	$3.86	$0.67	$0.67	8	$61.88	$78.63	$78.63	$95.38
Assistant to Engineer	$31.66	$13.03	$10.15	$3.86	$0.67	$0.67	8	$60.04	$75.87	$75.87	$91.70
Group 4	$36.43	$13.03	$10.15	$3.86	$0.67	$0.67	8	$64.81	$83.03	$83.03	$101.24
Group 5	$35.13	$13.03	$10.15	$3.86	$0.67	$0.67	8	$63.51	$81.08	$81.08	$98.64

# Indicates an apprenticeable craft. The current apprentice wage rates are available on the Internet at http://www.dir.ca.gov/OPRL/PWAppWage/PWAppWageStart.asp. To obtain any apprentice wage rates as of July 1, 2008 and prior to September 27, 2012, please contact the Division of Apprenticeship Standards or refer to the Division of Apprenticeship Standards' website at http://www.dir.ca.gov/das/das.html.

[a] Saturday in the same work week may be worked at straight-time rates if a job is shut down during the normal work week due to inclement weather.

[b] Rate applies to the first 2 daily overtime hours and the first 8 hours on Saturday only. All other time is paid at the Sunday/Holiday overtime rate.

[c] For Building Construction, see page 40B

[d] Includes an amount for supplemental dues.

[e] When three shifts are employed for five (5) or more consecutive days, seven and one-half (7 1/2) consecutive hours (exclusive of meal period), shall constitute a day of work, for which eight (8) times the straight time hourly rate shall be paid at the non-shift wage rate for the second shift. The third shift shall be seven (7) hours of work for eight (8) hours of pay at the non-shift wage rate.

GROUP 1
Cranes over 100 tons
Derrick over 100 tons
Self Propelled Boom Type Lifting Device over 100 tons

GROUP 2
Cranes over 45 tons up to and including 100 tons
Derrick, 100 tons and under
Self Propelled Boom Type Lifting Device, over 45 tons
Tower Crane

GROUP 3
Cranes, 45 tons and under
Self Propelled Boom Type Lifting Device, 45 tons and under

GROUP 4
Chicago Boom
Forklift, 10 tons and over
Heavy Duty Repairman/Welder

GROUP 5
Boom Cat

NOTE: For Special Single and Second Shift rates, please see page 45A.

RECOGNIZED HOLIDAYS: Holidays upon which the general prevailing hourly wage rate for Holiday work shall be paid, shall be all holidays in the collective bargaining agreement, applicable to the particular craft, classification, or type of worker employed on the project, which is on file with the Director of Industrial Relations. If the prevailing rate is not based on a collectively bargained rate, the holidays upon which the prevailing rate shall be paid shall be as provided in Section 6700 of the Government Code. You may obtain the holiday provisions for the current determinations on the Internet at http://www.dir.ca.gov/OPRL/PWD. Holiday provisions for current or superseded determinations may be obtained by contacting the Office of the Director – Research Unit at (415) 703-4774.

TRAVEL AND/OR SUBSISTENCE PAYMENT: In accordance with Labor Code Sections 1773.1 and 1773.9, contractors shall make travel and/or subsistence payments to each worker to execute the work. You may obtain the travel and/or subsistence provisions for the current determinations on the Internet at http://www.dir.ca.gov/OPRL/PWD. Travel and/or subsistence requirements for current or superseded determinations may be obtained by contacting the Office of the Director – Research Unit at (415) 703-4774.

DocuSign Envelope ID: 894511EA-295B-49EB-A393-D26A6837FDD4

GENERAL PREVAILING WAGE DETERMINATION MADE BY THE DIRECTOR OF INDUSTRIAL RELATIONS
PURSUANT TO CALIFORNIA LABOR CODE PART 7, CHAPTER 1, ARTICLE 2, SECTIONS 1770, 1773 AND 1773.1

FOR COMMERCIAL BUILDING, HIGHWAY, HEAVY CONSTRUCTION AND DREDGING PROJECTS

CRAFT: #STEEL ERECTOR AND FABRICATOR (OPERATING ENGINEER-HEAVY AND HIGHWAY WORK)[c]
(SPECIAL SINGLE AND SECOND SHIFT)

DETERMINATION: NC-23-63-1-2014-1D
ISSUE DATE: August 22, 2014
EXPIRATION DATE OF DETERMINATION: June 28, 2015** The rate to be paid for work performed after this date has been determined. If work will extend past this date, the new rate must be paid and should be incorporated in contracts entered into now. Contact the Office of the Director – Research Unit for specific rates at (415) 703-4774.

LOCALITY: All localities within Alameda, Alpine, Amador, Butte, Calaveras, Colusa, Contra Costa, Del Norte, El Dorado, Fresno, Glenn, Humboldt, Kings, Lake, Lassen, Madera, Marin, Mariposa, Mendocino, Merced, Modoc, Monterey, Napa, Nevada, Placer, Plumas, Sacramento, San Benito, San Francisco, San Joaquin, San Mateo, Santa Clara, Santa Cruz, Shasta, Sierra, Siskiyou, Solano, Sonoma, Stanislaus, Sutter, Tehama, Trinity, Tulare, Tuolumne, Yolo, and Yuba counties.

			Employer Payments				Straight-Time		Overtime Hourly Rate		
Classification (Journeyperson)	Basic Hourly Rate	Health and Welfare	Pension	Vacation and Holiday[d]	Training	Other Payments	Hours	Total Hourly Rate	Daily[b] 1 1/2X	Saturday[a&b] 1 1/2X	Sunday and Holiday 2X
Group 1	$46.25	$13.03	$10.15	$3.86	$0.67	$0.67	8	$74.63	$97.76	$97.76	$120.88
Truck Crane Assistant to Engineer	$38.02	$13.03	$10.15	$3.86	$0.67	$0.67	8	$66.40	$85.41	$85.41	$104.42
Assistant to Engineer	$35.50	$13.03	$10.15	$3.86	$0.67	$0.67	8	$63.88	$81.63	$81.63	$99.38
Group 2	$44.27	$13.03	$10.15	$3.86	$0.67	$0.67	8	$72.65	$94.79	$94.79	$116.92
Truck Crane Assistant to Engineer	$37.77	$13.03	$10.15	$3.86	$0.67	$0.67	8	$66.15	$85.04	$85.04	$103.92
Assistant to Engineer	$35.22	$13.03	$10.15	$3.86	$0.67	$0.67	8	$63.60	$81.21	$81.21	$98.82
Group 3	$42.59	$13.03	$10.15	$3.86	$0.67	$0.67	8	$70.97	$92.27	$92.27	$113.56
Truck Crane Assistant to Engineer	$37.47	$13.03	$10.15	$3.86	$0.67	$0.67	8	$65.85	$84.59	$84.59	$103.32
Hydraulic	$37.04	$13.03	$10.15	$3.86	$0.67	$0.67	8	$65.42	$83.94	$83.94	$102.46
Assistant to Engineer	$34.96	$13.03	$10.15	$3.86	$0.67	$0.67	8	$63.34	$80.82	$80.82	$98.30
Group 4	$40.33	$13.03	$10.15	$3.86	$0.67	$0.67	8	$68.71	$88.88	$88.88	$109.04
Group 5	$38.86	$13.03	$10.15	$3.86	$0.67	$0.67	8	$67.24	$86.67	$86.67	$106.10

# Indicates an apprenticeable craft. The current apprentice wage rates are available on the Internet at http://www.dir.ca.gov/OPRL/PWAppWage/PWAppWageStart.asp. To obtain any apprentice wage rates as of July 1, 2008 and prior to September 27, 2012, please contact the Division of Apprenticeship Standards or refer to the Division of Apprenticeship Standards' website at http://www.dir.ca.gov/das/das.html.

[a] Saturday in the same work week may be worked at straight-time rates if a job is shut down during the normal work week due to inclement weather.

[b] Rate applies to the first 2 daily overtime hours and the first 8 hours on Saturday only. All other time is paid at the Sunday/Holiday overtime rate.

[c] For Building Construction, see page 40B

[d] Includes an amount for supplemental dues.

GROUP 1
Cranes over 100 tons
Derrick over 100 tons
Self Propelled Boom Type Lifting Device over 100 tons

GROUP 2
Cranes over 45 tons up to and including 100 tons
Derrick, 100 tons and under
Self Propelled Boom Type Lifting Device, over 45 tons
Tower Crane

GROUP 3
Cranes, 45 tons and under
Self Propelled Boom Type Lifting Device, 45 tons and under

GROUP 4
Chicago Boom
Forklift, 10 tons and over
Heavy Duty Repairman/Welder

GROUP 5
Boom Cat

RECOGNIZED HOLIDAYS: Holidays upon which the general prevailing hourly wage rate for Holiday work shall be paid, shall be all holidays in the collective bargaining agreement, applicable to the particular craft, classification, or type of worker employed on the project, which is on file with the Director of Industrial Relations. If the prevailing rate is not based on a collectively bargained rate, the holidays upon which the prevailing rate shall be paid shall be as provided in Section 6700 of the Government Code. You may obtain the holiday provisions for the current determinations on the Internet at http://www.dir.ca.gov/OPRL/PWD. Holiday provisions for current or superseded determinations may be obtained by contacting the Office of the Director – Research Unit at (415) 703-4774.

TRAVEL AND/OR SUBSISTENCE PAYMENT: In accordance with Labor Code Sections 1773.1 and 1773.9, contractors shall make travel and/or subsistence payments to each worker to execute the work. You may obtain the travel and/or subsistence provisions for the current determinations on the Internet at http://www.dir.ca.gov/OPRL/PWD. Travel and/or subsistence requirements for current or superseded determinations may be obtained by contacting the Office of the Director – Research Unit at (415) 703-4774.

DocuSign Envelope ID: 894511EA-295B-49EB-A393-D26A6837FDD4

STATE OF CALIFORNIA Edmund G. Brown Jr., *Governor*

DEPARTMENT OF INDUSTRIAL RELATIONS
Office of the Director – Research Unit
455 Golden Gate Avenue, 9th Floor
San Francisco, CA 94102

MAILING ADDRESS:
P. O. Box 420603
San Francisco, CA 94142-0603

PREDETERMINED INCREASES FOR

OPERATING ENGINEER (HEAVY & HIGHWAY WORK) (NC-23-63-1-2014-1)

OPERATING ENGINEER (BUILDING CONSTRUCTION) (NC-23-63-1-2014-1A)

PILE DRIVER (OPERATING ENGINEER – HEAVY & HIGHWAY WORK) (NC-23-63-1-2014-1B)

PILE DRIVER (OPERATING ENGINEER – BUILDING CONSTRUCTION) (NC-23-63-1-2014-1B1)

STEEL ERECTOR AND FABRICATOR (OPERATING ENGINEER – HEAVY & HIGHWAY WORK) (NC-23-63-1-2014-1D)

STEEL ERECTOR AND FABRICATOR (OPERATING ENGINEER – BUILDING CONSTRUCTION) (NC-23-63-1-2014-1D1)

TUNNEL/UNDERGROUND (OPERATING ENGINEER – HEAVY AND HIGHWAY WORK) (NC-23-63-1-2014-1C)

ALL LOCALITIES WITHIN ALAMEDA[1], ALPINE, AMADOR, BUTTE, CALAVERAS, COLUSA, CONTRA COSTA[1], DEL NORTE, EL DORADO, FRESNO, GLENN, HUMBOLDT, KINGS, LAKE, LASSEN, MADERA, MARIN[1], MARIPOSA, MENDOCINO, MERCED, MODOC, MONTEREY, NAPA, NEVADA, PLACER, PLUMAS, SACRAMENTO, SAN BENITO, SAN FRANCISCO[1], SAN JOAQUIN, SAN MATEO[1], SANTA CLARA[1], SANTA CRUZ, SHASTA, SIERRA, SISKIYOU, SOLANO[1], SONOMA, STANISLAUS, SUTTER, TEHAMA, TRINITY, TULARE, TUOLUMNE, YOLO, AND YUBA COUNTIES

[1] *County not covered by Operating Engineer (Building Construction), Steel Erector and Fabricator (Operating Engineer – Building Construction), and Pile Driver (Operating Engineer – Building Construction).*

This predetermined increase(s) for the above named craft(s) applies only to the current determination for work being performed on public works projects with bid advertisement dates on or after **September 1, 2014**, until the determination(s) is/are superseded by a new determination or a predetermined increase modification notice becomes effective.

DocuSign Envelope ID: 894511EA-295B-49EB-A393-D26A6837FDD4

When referencing our prevailing wage determinations, please note that if the prevailing wage rate determination which was in effect on the bid advertisement date of a project has a single asterisk (*) after the expiration date, the rate will be good for the life of the project. However, if a prevailing wage rate determination has double asterisks (**) after the expiration date, the rate must be updated on the following date to reflect the predetermined rate change(s).

OPERATING ENGINEER: All Classifications (Areas 1 and 2), and All Shifts
The above Determinations are currently in effect and expire on June 28, 2015**.

Effective June 29, 2015, there will be an increase of $2.10 to be allocated to wages and/or fringe benefits.

There will be no further increases applicable to these determinations.

Issued 8/22/2014, Effective 9/1/2014 until superseded.

This page will be updated when wage rate breakdown information becomes available.
Last Updated: 9/1/2014

DocuSign Envelope ID: 894511EA-295B-49EB-A393-D26A6837FDD4

GENERAL PREVAILING WAGE DETERMINATION MADE BY THE DIRECTOR OF INDUSTRIAL RELATIONS PURSUANT TO CALIFORNIA LABOR CODE PART 7, CHAPTER 1, ARTICLE 2, SECTIONS 1770, 1773 AND 1773.1

FOR COMMERCIAL BUILDING, HIGHWAY, HEAVY CONSTRUCTION AND DREDGING PROJECTS

CRAFT: TEAMSTER (APPLIES ONLY TO WORK ON THE CONSTRUCTION SITE)

DETERMINATION: NC-23-261-1-2014-1
ISSUE DATE: August 22, 2014
EXPIRATION DATE OF DETERMINATION: June 28, 2015** The rate to be paid for work performed after this date has been determined. If work will extend past this date, the new rate must be paid and should be incorporated in contracts entered into now. Contact the Office of the Director – Research Unit for specific rates at (415) 703-4774.

LOCALITY: All Localities within Alameda, Alpine, Amador, Butte, Calaveras, Colusa, Contra Costa, Del Norte, El Dorado, Fresno, Glenn, Humboldt, Kings, Lake, Lassen, Madera, Marin, Mariposa, Mendocino, Merced, Modoc, Monterey, Napa, Nevada, Placer, Plumas, Sacramento, San Benito, San Francisco, San Joaquin, San Mateo, Santa Clara, Santa Cruz, Shasta, Sierra, Siskiyou, Solano, Sonoma, Stanislaus, Sutter, Tehama, Trinity, Tulare, Tuolumne, Yolo, and Yuba Counties.

		Employer Payments					Straight-Time		Overtime Hourly Rate		
Classification[g] (Journeyperson)	Basic Hourly Rate	Health and Welfare	Pension	Vacation/ Holiday	Training	Other Payments	Hours	Total Hourly Rate	Daily 1 1/2X	Saturday[b] 1 1/2X	Sunday/ Holiday 2X
Group 1	$27.96	$15.53	$5.75	$2.15	$0.85	[a] $0.53	8	$52.77	$66.75	$66.75	$80.73
Group 2	28.26	15.53	5.75	2.15	0.85	[a] 0.53	8	53.07	67.20	67.20	81.33
Group 3	28.56	15.53	5.75	2.15	0.85	[a] 0.53	8	53.37	67.65	67.65	81.93
Group 4	28.91	15.53	5.75	2.15	0.85	[a] 0.53	8	53.72	68.175	68.175	82.63
Group 5	29.26	15.53	5.75	2.15	0.85	[a] 0.53	8	54.07	68.70	68.70	83.33
Group 6		USE DUMP TRUCK YARDAGE RATE									
Group 7		USE APPROPRIATE RATE FOR THE POWER UNIT OR THE EQUIPMENT UTILIZED									
Group 8 (Trainee)[c]											
[d] Step I – 1st 1000 Hours											
[e] Step II – 2nd 1000 Hours											
[f] Step III – 3rd 1000 Hours											

[a] Supplemental Dues and Contract Administration.
[b] Saturday in the same work week may be worked at straight-time hourly rate if a job is shut down during the normal work week due to inclement weather or major mechanical breakdown, or lack of materials beyond the control of the Employer.
[c] An individual employer may employ one (1) trainee for every four (4) journey level Teamsters actively employed. Individual employers with less than four (4) journey level Teamsters may utilize one (1) trainee; thereafter, one (1) for every four (4) journey level Teamsters.
[d] Sixty-five percent (65%) of the Journey level wage for the type of equipment operated, plus full fringes without Vacation/Holiday.
[e] Seventy-five percent (75%) of the Journey level wage for the type of equipment operated, plus full fringes without Vacation/Holiday.
[f] Eighty-five percent (85%) of the Journey level wage for the type of equipment operated, plus full fringes without Vacation/Holiday.
[g] For classifications within each group, see page 56.

RECOGNIZED HOLIDAYS: Holidays upon which the general prevailing hourly wage rate for Holiday work shall be paid, shall be all holidays in the collective bargaining agreement, applicable to the particular craft, classification, or type of worker employed on the project, which is on file with the Director of Industrial Relations. If the prevailing rate is not based on a collectively bargained rate, the holidays upon which the prevailing rate shall be paid shall be as provided in Section 6700 of the Government Code. You may obtain the holiday provisions for the current determinations on the Internet at http://www.dir.ca.gov/OPRL/PWD. Holiday provisions for current or superseded determinations may be obtained by contacting the Office of the Director – Research Unit at (415) 703-4774.

TRAVEL AND/OR SUBSISTENCE PAYMENT: In accordance with Labor Code Sections 1773.1 and 1773.9, contractors shall make travel and/or subsistence payments to each worker to execute the work. You may obtain the travel and/or subsistence provisions for the current determinations on the Internet at http://www.dir.ca.gov/OPRL/PWD. Travel and/or subsistence requirements for current or superseded determinations may be obtained by contacting the Office of the Director – Research Unit at (415) 703-4774.

DocuSign Envelope ID: 894511EA-295B-49EB-A393-D26A6837FDD4

DETERMINATION: NC-23-261-1-2014-1 and NC-23-261-1-2014-1A

CLASSIFICATIONS:

GROUP 1
Dump Trucks under 6 yards
Single Unit Flat Rack (2 axle unit)
Nipper Truck (When Flat Rack Truck is used appropriate Flat Rack shall apply)
Concrete pump truck (When Flat Rack Truck is used appropriate Flat Rack shall apply)
Concrete pump machine
Snow Buggy
Steam Cleaning
Bus or Manhaul Driver
Escort or Pilot Car Driver
Pickup Truck
Teamster Oiler/Greaser/and or Serviceman
Hook Tenders
Team Drivers
Warehouseman
Tool Room Attendant (Refineries)
Fork Lift and Lift Jitneys
Warehouse Clerk/Parts Man
Fuel and/or Grease Truck Driver or Fuelman
Truck Repair Helper
Fuel Island Attendant, or Combination Pit and/or Grease Rack and Fuel Island Attendant

GROUP 2
Dump Trucks 6 yards Under 8 yards
Transit Mixers through 10 yards
Water Trucks Under 7000 gals.
Jetting Trucks Under 7000 gals.
Single Unit flat rack (3 axle unit)
Highbed Heavy Duty Transport
Scissor Truck
Rubber Tired Muck Car (not self-loaded)
Rubber Tired Truck Jumbo
Winch Truck and "A" Frame Drivers
Combination Winch Truck With Hoist
Road Oil Truck or Bootman
Buggymobile
Ross, Hyster and similar Straddle Carrier
Small Rubber Tired Tractor
Truck Dispatcher

GROUP 3
Dump Trucks 8 yards and including 24 yards
Transit Mixers Over 10 yards
Water Trucks 7000 gals and over
Jetting Trucks 7000 gals and over
Vacuum Trucks under 7500 gals
Trucks Towing Tilt Bed or Flat Bed Pull Trailers
Heavy Duty Transport Tiller Man
Tire Repairman

GROUP 3 (continued)
Truck Mounted Self Propelled Street Sweeper with or without Self-Contained Refuse Bin and or Vacuum Unit
Boom Truck - Hydro-Lift or Swedish Type Extension or Retracting Crane
P.B. or Similar Type Self Loading Truck
Combination Bootman and Road Oiler
Dry Distribution Truck (A Bootman when employed on such equipment, shall receive the rate specified for the classification of Road Oil Trucks or Bootman)
Ammonia Nitrate Distributor, Driver and Mixer
Snow Go and/or Plow

GROUP 4
Dump Trucks over 25 yards and under 65 yards
Vacuum Trucks 7500 gals and over.
Truck Repairman
Water Pulls - DW 10s, 20s, 21s and other similar equipment when pulling Aqua/pak or Water Tank Trailers
Helicopter Pilots
Lowbed Heavy Duty Transport (up to and including 7 axles)
DW 10s, 20s, 21s and other similar Cat type, Terra Cobra, LeTourneau Pulls, Tournorocker, Euclid and similar type Equipment when pulling fuel and/or grease tank trailers or other miscellaneous trailers

GROUP 5
Dump Truck 65 yards and over
Holland Hauler
Lowbed Heavy Duty Transport (over 7 axles)

GROUP 6 (Use dump truck yardage rate)
Articulated Dump Truck
Bulk Cement Spreader (w/ or w/o Auger)
Dumpcrete Truck
Skid Truck (Debris Box)
Dry Pre-Batch Concrete Mix Trucks
Dumpster or Similar Type
Slurry Truck

GROUP 7 (Use appropriate Rate for the Power Unit or the Equipment Utilized)
Heater Planer
Asphalt Burner
Scarifier Burner
Fire Guard
Industrial Lift Truck (mechanical tailgate)
Utility and Clean-up Truck
Composite Crewman

GROUP 8
Trainee

DocuSign Envelope ID: 894511EA-295B-49EB-A393-D26A6837FDD4

GENERAL PREVAILING WAGE DETERMINATION MADE BY THE DIRECTOR OF INDUSTRIAL RELATIONS PURSUANT TO CALIFORNIA LABOR CODE PART 7, CHAPTER 1, ARTICLE 2, SECTIONS 1770, 1773 AND 1773.1

FOR COMMERCIAL BUILDING, HIGHWAY, HEAVY CONSTRUCTION AND DREDGING PROJECTS

CRAFT: TEAMSTER (SPECIAL SINGLE SHIFT RATE)
(APPLIES ONLY TO WORK ON THE CONSTRUCTION SITE)

DETERMINATION: NC-23-261-1-2014-1A
ISSUE DATE: August 22, 2014
EXPIRATION DATE OF DETERMINATION: June 28, 2015** The rate to be paid for work performed after this date has been determined. If work will extend past this date, the new rate must be paid and should be incorporated in contracts entered into now. Contact the Office of the Director – Research Unit for specific rates at (415) 703-4774.

LOCALITY: All Localities within Alameda, Alpine, Amador, Butte, Calaveras, Colusa, Contra Costa, Del Norte, El Dorado, Fresno, Glenn, Humboldt, Kings, Lake, Lassen, Madera, Marin, Mariposa, Mendocino, Merced, Modoc, Monterey, Napa, Nevada, Placer, Plumas, Sacramento, San Benito, San Francisco, San Joaquin, San Mateo, Santa Clara, Santa Cruz, Shasta, Sierra, Siskiyou, Solano, Sonoma, Stanislaus, Sutter, Tehama, Trinity, Tulare, Tuolumne, Yolo, and Yuba Counties.

		Employer Payments					Straight-Time		Overtime Hourly Rate		
Classification[g] (Journeyperson)	Basic Hourly Rate	Health and Welfare	Pension	Vacation/ Holiday	Training	Other Payments	Hours	Total Hourly Rate	Daily 1 1/2X	Saturday[b] 1 1/2X	Sunday/ Holiday 2X
Group 1	$29.96	$15.53	$5.75	$2.15	$0.85	[a] $0.53	8	$54.77	$69.75	$69.75	$84.73
Group 2	30.26	15.53	5.75	2.15	0.85	0.53	8	55.07	70.20	70.20	85.33
Group 3	30.56	15.53	5.75	2.15	0.85	0.53	8	55.37	70.65	70.65	85.93
Group 4	30.91	15.53	5.75	2.15	0.85	0.53	8	55.72	71.175	71.175	86.63
Group 5	31.26	15.53	5.75	2.15	0.85	0.53	8	56.07	71.70	71.70	87.33
Group 6		USE DUMP TRUCK YARDAGE RATE									
Group 7		USE APPROPRIATE RATE FOR THE POWER UNIT OR THE EQUIPMENT UTILIZED									
Group 8 (Trainee)[c]											
[d] Step I – 1st 1000 Hours											
[e] Step II – 2nd 1000 Hours											
[f] Step III – 3rd 1000 Hours											

[a] Supplemental Dues and Contract Administration.
[b] Saturday in the same work week may be worked at straight-time hourly rate if a job is shut down during the normal work week due to inclement weather or major mechanical breakdown, or lack of materials beyond the control of the Employer.
[c] An individual employer may employ one (1) trainee for every four (4) journey level Teamsters actively employed. Individual employers with less than four (4) journey level Teamsters may utilize one (1) trainee; thereafter, one (1) for every four (4) journey level Teamsters.
[d] Sixty-five percent (65%) of the Journey level wage for the type of equipment operated, plus full fringes without Vacation/Holiday.
[e] Seventy-five percent (75%) of the Journey level wage for the type of equipment operated, plus full fringes without Vacation/Holiday.
[f] Eighty-five percent (85%) of the Journey level wage for the type of equipment operated, plus full fringes without Vacation/Holiday.
[g] For classifications within each group, see page 56.

RECOGNIZED HOLIDAYS: Holidays upon which the general prevailing hourly wage rate for Holiday work shall be paid, shall be all holidays in the collective bargaining agreement, applicable to the particular craft, classification, or type of worker employed on the project, which is on file with the Director of Industrial Relations. If the prevailing rate is not based on a collectively bargained rate, the holidays upon which the prevailing rate shall be paid shall be as provided in Section 6700 of the Government Code. You may obtain the holiday provisions for the current determinations on the Internet at http://www.dir.ca.gov/OPRL/PWD. Holiday provisions for current or superseded determinations may be obtained by contacting the Office of the Director – Research Unit at (415) 703-4774.

TRAVEL AND/OR SUBSISTENCE PAYMENT: In accordance with Labor Code Sections 1773.1 and 1773.9, contractors shall make travel and/or subsistence payments to each worker to execute the work. You may obtain the travel and/or subsistence provisions for the current determinations on the Internet at http://www.dir.ca.gov/OPRL/PWD. Travel and/or subsistence requirements for current or superseded determinations may be obtained by contacting the Office of the Director – Research Unit at (415) 703-4774.

DocuSign Envelope ID: 894511EA-295B-49EB-A393-D26A6837FDD4

STATE OF CALIFORNIA Edmund G. Brown Jr., *Governor*

DEPARTMENT OF INDUSTRIAL RELATIONS
Office of the Director – Research Unit
455 Golden Gate Avenue, 9th Floor
San Francisco, CA 94102

MAILING ADDRESS:
P. O. Box 420603
San Francisco, CA 94142-0603

PREDETERMINED INCREASES FOR

TEAMSTER
(NC-23-261-1-2014-1)

TEAMSTER (SPECIAL SINGLE SHIFT)
(NC-23-261-1-2014-1A)

IN ALAMEDA, ALPINE, AMADOR, BUTTE, CALAVERAS, COLUSA, CONTRA COSTA, DEL NORTE, EL DORADO, FRESNO, GLENN, HUMBOLDT, KINGS, LAKE, LASSEN, MADERA, MARIN, MARIPOSA, MENDOCINO, MERCED, MODOC, MONTEREY, NAPA, NEVADA, PLACER, PLUMAS, SACRAMENTO, SAN BENITO, SAN FRANCISCO, SAN JOAQUIN, SAN MATEO, SANTA CLARA, SANTA CRUZ, SHASTA, SIERRA, SISKIYOU, SOLANO, SONOMA, STANISLAUS, SUTTER, TEHAMA, TRINITY, TULARE, TUOLUMNE, YOLO AND YUBA COUNTIES

This predetermined increase for the above named craft applies only to the current determination for work being performed on public works projects with bid advertisement dates on or after **September 1, 2014**, until this determination is superseded by a new determination or a predetermined increase modification notice becomes effective.

When referencing our prevailing wage determinations, please note that if the prevailing wage rate determination which was in effect on the bid advertisement date of a project has a single asterisk (*) after the expiration date, the rate will be good for the life of the project. However, if a prevailing wage rate determination has double asterisks (**) after the expiration date, the rate must be updated on the following date to reflect the predetermined rate change(s).

TEAMSTER: (All groups except Group 8)
Determinations NC-23-261-1-2014-1 and NC-23-261-1-2014-1A are currently in effect and expire on June 28, 2015**.

Effective June 29, 2015, there will be an increase of $1.60 to be allocated to wages and/or fringe benefits.

GROUP 8 (Trainee) receive no predetermined increases.

There will be no further increases applicable to these determinations.

Issued 8/22/2014, Effective 9/1/2014 until superseded.

This page will be updated when wage rate breakdown information becomes available.
Last Updated: 9/1/2014

DocuSign Envelope ID: 894511EA-295B-49EB-A393-D26A6837FDD4

GENERAL PREVAILING WAGE DETERMINATION MADE BY THE DIRECTOR OF INDUSTRIAL RELATIONS PURSUANT TO CALIFORNIA LABOR CODE PART 7, CHAPTER 1, ARTICLE 2, SECTIONS 1770, 1773, AND 1773.1

FOR COMMERCIAL BUILDING, HIGHWAY, HEAVY CONSTRUCTION AND DREDGING PROJECTS

CRAFT: TELECOMMUNICATIONS TECHNICIAN

DETERMINATION: C-422-X-1-2003-2
ISSUE DATE: August 22, 2003
EXPIRATION DATE OF DETERMINATION: June 1, 2004* Effective until superseded by a new determination issued by the Director of Industrial Relations. Contact the Division of Labor Statistics & Research at (415) 703-4774 for the new rates after 10 days from the expiration date, if no subsequent determination is issued.

LOCALITY: All localities within Alameda, Los Angeles, San Francisco, San Mateo, and Santa Clara Counties.

		Employer Payments				Straight-Time		Overtime Hourly Rate	
Classification (Journeyperson)	Basic Hourly Rate	Health and Welfare	Pension	Vacation and Holidays	Training	Hours	Total Hourly Rate	1 1/2X[a]	Holiday 2 1/2X
Telecommunications Technician	28.50	2.79	0.93	3.28	-	8	35.50	49.75	78.25

[a] Rate applies to work in excess of eight hours daily and for all hours over 40. Rate applies to all hours worked on Sunday.

RECOGNIZED HOLIDAYS: Holidays upon which the general prevailing hourly wage rate for Holiday work shall be paid, shall be all holidays in the collective bargaining agreement, applicable to the particular craft, classification, or type of worker employed on the project, which is on file with the Director of Industrial Relations. If the prevailing rate is not based on a collectively bargained rate, the holidays upon which the prevailing rate shall be paid shall be as provided in Section 6700 of the Government Code. You may obtain the holiday provisions for the current determinations on the Internet at http://www.dir.ca.gov/DLSR/PWD. Holiday provisions for current or superseded determinations may be obtained by contacting the Prevailing Wage Unit at (415) 703-4774.

TRAVEL AND/OR SUBSISTENCE PAYMENT: In accordance with Labor Code Sections 1773.1 and 1773.9, contractors shall make travel and/or subsistence payments to each worker to execute the work. You may obtain the travel and/or subsistence provisions for the current determinations on the Internet at http://www.dir.ca.gov/DLSR/PWD. Travel and/or subsistence requirements for current or superseded determinations may be obtained by contacting the Prevailing Wage Unit at (415) 703-4774.

DocuSign Envelope ID: 894511EA-295B-49EB-A393-D26A6837FDD4

GENERAL PREVAILING WAGE DETERMINATION MADE BY THE DIRECTOR OF INDUSTRIAL RELATIONS PURSUANT TO CALIFORNIA LABOR CODE PART 7, CHAPTER 1, ARTICLE 2, SECTIONS 1770, 1773, AND 1773.1

FOR COMMERCIAL BUILDING, HIGHWAY, HEAVY CONSTRUCTION AND DREDGING PROJECTS

CRAFT: TELECOMMUNICATIONS TECHNICIAN

DETERMINATION: C-422-X-1-2003-2A
ISSUE DATE: August 22, 2003
EXPIRATION DATE OF DETERMINATION: June 1, 2004* Effective until superseded by a new determination issued by the Director of Industrial Relations. Contact the Division of Labor Statistics & Research at (415) 703-4774 for the new rates after 10 days from the expiration date, if no subsequent determination is issued.

LOCALITY: All localities within Contra Costa, Marin, Orange, and San Diego counties.

		Employer Payments				Straight-Time		Overtime Hourly Rate	
Classification (Journeyperson)	Basic Hourly Rate	Health and Welfare	Pension	Vacation and Holidays	Training	Hours	Total Hourly Rate	1 1/2X[a]	Holiday 2 1/2X
Telecommunications Technician	27.93	2.79	0.93	3.21	-	8	34.86	48.825	76.755

[a] Rate applies to work in excess of eight hours daily and for all hours over 40. Rate applies to all hours worked on Sunday .

RECOGNIZED HOLIDAYS: Holidays upon which the general prevailing hourly wage rate for Holiday work shall be paid, shall be all holidays in the collective bargaining agreement, applicable to the particular craft, classification, or type of worker employed on the project, which is on file with the Director of Industrial Relations. If the prevailing rate is not based on a collectively bargained rate, the holidays upon which the prevailing rate shall be paid shall be as provided in Section 6700 of the Government Code. You may obtain the holiday provisions for the current determinations on the Internet at http://www.dir.ca.gov/DLSR/PWD. Holiday provisions for current or superseded determinations may be obtained by contacting the Prevailing Wage Unit at (415) 703-4774.

TRAVEL AND/OR SUBSISTENCE PAYMENT: In accordance with Labor Code Sections 1773.1 and 1773.9, contractors shall make travel and/or subsistence payments to each worker to execute the work. You may obtain the travel and/or subsistence provisions for the current determinations on the Internet at http://www.dir.ca.gov/DLSR/PWD. Travel and/or subsistence requirements for current or superseded determinations may be obtained by contacting the Prevailing Wage Unit at (415) 703-4774.

DocuSign Envelope ID: 894511EA-295B-49EB-A393-D26A6837FDD4

GENERAL PREVAILING WAGE DETERMINATION MADE BY THE DIRECTOR OF INDUSTRIAL RELATIONS PURSUANT TO CALIFORNIA LABOR CODE PART 7, CHAPTER 1, ARTICLE 2, SECTIONS 1770, 1773, AND 1773.1

FOR COMMERCIAL BUILDING, HIGHWAY, HEAVY CONSTRUCTION AND DREDGING PROJECTS

CRAFT: TELECOMMUNICATIONS TECHNICIAN

DETERMINATION: C-422-X-1-2003-2B
ISSUE DATE: August 22, 2003
EXPIRATION DATE OF DETERMINATION: June 1, 2004* Effective until superseded by a new determination issued by the Director of Industrial Relations. Contact the Division of Labor Statistics & Research at (415) 703-4774 for the new rates after 10 days from the expiration date, if no subsequent determination is issued.

LOCALITY: All localities within the Alpine, Amador, Butte, Calaveras, Colusa, El Dorado, Fresno, Glenn, Humboldt, Imperial, Kern, Kings, Lake, Lassen, Madera, Mariposa, Mendocino, Merced, Modoc, Monterey, Napa, Nevada, Placer, Plumas, Riverside, Sacramento, San Benito, San Joaquin, San Luis Obispo, Santa Cruz, Shasta, Sierra, Siskiyou, Solano, Sonoma, Stanislaus, Sutter, Tehama, Trinity, Tulare, Tuolumne, Ventura, Yolo and Yuba counties.

		Employer Payments				Straight-Time		Overtime Hourly Rate	
Classification (Journeyperson)	Basic Hourly Rate	Health and Welfare	Pension	Vacation and Holidays	Training	Hours	Total Hourly Rate	1 1/2X[a]	Holiday 2 1/2X
Telecommunications Technician	27.18	2.79	0.93	3.13	-	8	34.03	47.62	74.80

[a] Rate applies to work in excess of eight hours daily and for all hours over 40. Rate applies to all hours worked on Sunday.

RECOGNIZED HOLIDAYS: Holidays upon which the general prevailing hourly wage rate for Holiday work shall be paid, shall be all holidays in the collective bargaining agreement, applicable to the particular craft, classification, or type of worker employed on the project, which is on file with the Director of Industrial Relations. If the prevailing rate is not based on a collectively bargained rate, the holidays upon which the prevailing rate shall be paid shall be as provided in Section 6700 of the Government Code. You may obtain the holiday provisions for the current determinations on the Internet at http://www.dir.ca.gov/DLSR/PWD. Holiday provisions for current or superseded determinations may be obtained by contacting the Prevailing Wage Unit at (415) 703-4774.

TRAVEL AND/OR SUBSISTENCE PAYMENT: In accordance with Labor Code Sections 1773.1 and 1773.9, contractors shall make travel and/or subsistence payments to each worker to execute the work. You may obtain the travel and/or subsistence provisions for the current determinations on the Internet at http://www.dir.ca.gov/DLSR/PWD. Travel and/or subsistence requirements for current or superseded determinations may be obtained by contacting the Prevailing Wage Unit at (415) 703-4774.

DocuSign Envelope ID: 894511EA-295B-49EB-A393-D26A6837FDD4

GENERAL PREVAILING WAGE DETERMINATION MADE BY THE DIRECTOR OF INDUSTRIAL RELATIONS PURSUANT TO CALIFORNIA LABOR CODE PART 7, CHAPTER 1, ARTICLE 2, SECTIONS 1770, 1773 AND 1773.1

FOR COMMERCIAL BUILDING, HIGHWAY, HEAVY CONSTRUCTION AND DREDGING PROJECTS

CRAFT: TRAFFIC CONTROL/LANE CLOSURE (LABORER) [h]
AND
PARKING AND HIGHWAY IMPROVEMENT PAINTER (LABORER)

DETERMINATION: NC-23-102-13-2014-2
ISSUE DATE: August 22, 2014
EXPIRATION DATE OF DETERMINATION: June 28, 2015** The rate to be paid for work performed after this date has been determined. If work will extend past this date, the new rate must be paid and should be incorporated in contracts entered into now. Contact the Office of the Director – Research Unit for specific rates at (415) 703-4774.

LOCALITY: All localities within Alameda, Alpine, Amador, Butte, Calaveras, Colusa, Contra Costa, Del Norte, El Dorado, Fresno, Glenn, Humboldt, Kings, Lake, Lassen, Madera, Marin, Mariposa, Mendocino, Merced, Modoc, Monterey, Napa, Nevada, Placer, Plumas, Sacramento, San Benito, San Francisco, San Joaquin, San Mateo, Santa Clara, Santa Cruz, Shasta, Sierra, Siskiyou, Solano, Sonoma, Stanislaus, Sutter, Tehama, Trinity, Tulare, Tuolumne, Yolo, and Yuba Counties.

Classification (Journeyperson)	Basic Hourly Rate	Employer Payments: Health and Welfare [e]	Pension [a]	Vacation and Holiday [b]	Training	Other Payments	Straight-Time Hours	Total Hourly Rate	Overtime Hourly Rate: Daily [f] 1 1/2X	Saturday [c f] 1 1/2X	Sunday And Holiday [g]
TRAFFIC CONTROL AND RELATED CLASSIFICATIONS											
AREA 1 [d]											
Traffic Control Person I	28.44	6.84	10.10	2.63	0.41	0.15	8	48.57	62.79	62.79	77.01
Traffic Control Person II	25.94	6.84	10.10	2.63	0.41	0.15	8	46.07	59.04	59.04	72.01
Flag Person	28.14	6.84	10.10	2.63	0.41	0.15	8	48.27	62.34	62.34	76.41
AREA 2 [d]											
Traffic Control Person I	27.44	6.84	10.10	2.63	0.41	0.15	8	47.57	61.29	61.29	75.01
Traffic Control Person II	24.94	6.84	10.10	2.63	0.41	0.15	8	45.07	57.54	57.54	70.01
Flag Person	27.14	6.84	10.10	2.63	0.41	0.15	8	47.27	60.84	60.84	74.41

DETERMINATION: NC-23-102-13-2014-2A
ISSUE DATE: August 22, 2014
EXPIRATION DATE OF DETERMINATION: June 28, 2015** The rate to be paid for work performed after this date has been determined. If work will extend past this date, the new rate must be paid and should be incorporated in contracts entered into now. Contact the Office of the Director – Research Unit for specific rates at (415) 703-4774.

LOCALITY: All localities within Alameda, Alpine, Amador, Butte, Calaveras, Colusa, Contra Costa, Del Norte, El Dorado, Fresno, Glenn, Humboldt, Kings, Lake, Lassen, Madera, Marin, Mariposa, Mendocino, Merced, Modoc, Monterey, Napa, Nevada, Placer, Plumas, Sacramento, San Benito, San Francisco, San Mateo, Santa Clara, Santa Cruz, Shasta, Sierra, Siskiyou, Solano, Sonoma, Stanislaus, Sutter, Tehama, Trinity, Tulare, and Yuba Counties.

STRIPER AND RELATED CLASSIFICATIONS

Classification (Journeyperson)	Basic Hourly Rate	Employer Payments: Health [d] and Welfare	Pension [a]	Vacation and Holiday [b]	Training	Other Payments	Straight-Time Hours	Total Hourly Rate	Overtime Hourly Rate: Daily [f] 1 1/2X	Saturday [c f] 1 1/2X	Sunday and Holiday [g]
Group 1	31.85	6.84	9.14	2.48	0.39	0.13	8	50.83	66.755	66.755	82.68
Group 2	30.35	6.84	9.14	2.48	0.39	0.13	8	49.33	64.505	64.505	79.68
Group 3	28.60	6.84	9.14	2.48	0.39	0.13	8	47.58	61.88	61.88	76.18
Group 4	26.50	6.84	9.14	2.48	0.39	0.13	8	45.48	58.73	58.73	71.98

Footnotes listed on page 44A.

DocuSign Envelope ID: 894511EA-295B-49EB-A393-D26A6837FDD4

# Indicates an apprenticeable craft. The current apprentice wage rates are available on the Internet at http://www.dir.ca.gov/OPRL/PWAppWage/PWAppWageStart.asp. To obtain any apprentice wage rates as of July 1, 2008 and prior to September 27, 2012, please contact the Division of Apprenticeship Standards or refer to the Division of Apprenticeship Standards' website at http://www.dir.ca.gov/das/das.html.

a Includes an amount for the Annuity Trust Fund.

b Includes an amount for Supplemental Dues

c Saturdays or scheduled sixth (6th) consecutive work day in the same work week may be worked at straight-time if the job is shut down during the normal work week due to inclement weather, major mechanical breakdown or lack of materials beyond the control of the employer.

d **AREA 1** - Alameda, Contra Costa, Marin, San Francisco, San Mateo and Santa Clara Counties.
AREA 2 - Alpine, Amador, Butte, Calaveras, Colusa, Del Norte, El Dorado, Fresno, Glenn, Humboldt, Kings, Lake, Lassen, Madera, Mariposa, Mendocino, Merced, Modoc, Monterey, Napa, Nevada, Placer, Plumas, Sacramento, San Benito, San Joaquin, Santa Cruz, Shasta, Sierra, Siskiyou, Solano, Sonoma, Stanislaus, Sutter, Tehama, Trinity, Tulare, Tuolumne, Yolo and Yuba Counties.

e Includes an amount for Retiree Health & Welfare

f One and one-half (1-1/2) the straight time hourly rate of pay shall be paid for all work performed in excess of forty hours (40) a week or eight hours (8) a day and the sixth (6th) consecutive day worked or Saturdays.

g Two times (2x) the straight time hourly rate of pay shall be paid for all work performed on the seventh (7th) consecutive day worked, or Sundays and holidays.

h The rates of the Laborer classifications for the craft of Traffic Control/Lane Closure (Laborer) do not apply to traffic control work associated with parking and highway improvement projects in San Joaquin, Tuolumne, and Yolo Counties. For traffic control work associated with parking and highway improvement projects in these three counties, the minimum rate of pay is that of the Painter classifications for the craft of Parking and Highway Improvement Painter (Painter).

STRIPER AND RELATED CLASSIFICATIONS:

Group 1	Group 2	Group 3	Group 4
Traffic Striping Applicator	Traffic Delineating Device Applicator Traffic Protective System Installer Pavement Markings Applicator Decorative Asphalt Surfacing Applicator	Traffic Surface Abrasive Blaster Pot Tender	Parking Lots, Game Courts & Playground Striping Applicator Decorative Asphalt Surfacing Laborer

RECOGNIZED HOLIDAYS: Holidays upon which the general prevailing hourly wage rate for Holiday work shall be paid, shall be all holidays in the collective bargaining agreement, applicable to the particular craft, classification, or type of worker employed on the project, which is on file with the Director of Industrial Relations. If the prevailing rate is not based on a collectively bargained rate, the holidays upon which the prevailing rate shall be paid shall be as provided in Section 6700 of the Government Code. You may obtain the holiday provisions for the current determinations on the Internet at http://www.dir.ca.gov/OPRL/PWD. Holiday provisions for current or superseded determinations may be obtained by contacting the Prevailing Wage Unit at (415) 703-4774.

TRAVEL AND/OR SUBSISTENCE PAYMENT: In accordance with Labor Code Sections 1773.1 and 1773.9, contractors shall make travel and/or subsistence payments to each worker to execute the work. You may obtain the travel and/or subsistence provisions for the current determinations on the Internet at http://www.dir.ca.gov/OPRL/PWD. Travel and/or subsistence requirements for current or superseded determinations may be obtained by contacting the Prevailing Wage Unit at (415) 703-4774.

DocuSign Envelope ID: 894511EA-295B-49EB-A393-D26A6837FDD4

STATE OF CALIFORNIA Edmund G. Brown, Jr., *Governor*

DEPARTMENT OF INDUSTRIAL RELATIONS
Office of the Director – Research Unit
455 Golden Gate Avenue, 9th Floor
San Francisco, CA 94102

MAILING ADDRESS:
P. O. Box 420603
San Francisco, CA 94142-0603

PREDETERMINED INCREASE FOR

TRAFFIC CONTROL/LANE CLOSURE (LABORER) (NC-23-102-13-2014-2) AND # PARKING AND HIGHWAY IMPROVEMENT PAINTER (LABORER) (NC-23-102-13-2014-2A)

IN ALL LOCALITIES WITHIN ALAMEDA, ALPINE, AMADOR, BUTTE, CALAVERAS, COLUSA, CONTRA COSTA, DEL NORTE, EL DORADO, FRESNO, GLENN, HUMBOLDT, KINGS, LAKE, LASSEN, MADERA, MARIPOSA, MARIN, MENDOCINO, MERCED, MODOC, MONTEREY, NAPA, NEVADA, PLACER, PLUMAS, SACRAMENTO, SAN BENITO, SAN FRANCISCO, SAN JOAQUIN[1], SAN MATEO, SANTA CLARA, SANTA CRUZ, SHASTA, SIERRA, SISKIYOU, SOLANO, SONOMA, STANISLAUS, SUTTER, TEHAMA, TRINITY, TULARE, TUOLUMNE[1], YOLO[1], AND YUBA COUNTIES.

This predetermined increase for the above named craft applies only to the current determination for work being performed on public works projects with bid advertisement dates on or after **September 1, 2014**, until this determination is superseded by a new determination or a predetermined increase modification notice becomes effective.

When referencing our prevailing wage determinations, please note that if the prevailing wage rate determination which was in effect on the bid advertisement date of a project has a single asterisk (*) after the expiration date, the rate will be good for the life of the project. However, if a prevailing wage rate determination has double asterisks (**) after the expiration date, the rate must be updated on the following date to reflect the predetermined rate change(s).

TRAFFIC CONTROL/LANE CLOSURE (LABORER) and PARKING AND HIGHWAY IMPROVEMENT PAINTER (LABORER)

Determinations NC-23-102-13-2014-2 and NC-23-102-13-2014-2A are currently in effect and expires on June 28, 2015**.

Effective June 29, 2015, there will be an increase of $1.40 to be allocated to wages and/or fringes.

Effective June 27, 2016, there will be an increase of $1.50 to be allocated to wages and/or fringes.

Effective June 26, 2017, there will be an increase of $1.60 to be allocated to wages and/or fringes.

Effective June 25, 2018, there will be an increase of $1.65 to be allocated to wages and/or fringes.

There will be no further increases applicable to this determination.

Issued 8/22/2014, Effective 9/1/2014 until superseded.

[1] County not covered by Parking And Highway Improvement Painter (Laborer) - Striper And Related Classifications.

This page will be updated when wage rate breakdown information becomes available.

Last Updated: September 1, 2014

DocuSign Envelope ID: 894511EA-295B-49EB-A393-D26A6837FDD4

GENERAL PREVAILING WAGE DETERMINATION MADE BY THE DIRECTOR OF INDUSTRIAL RELATIONS

PURSUANT TO CALIFORNIA LABOR CODE PART 7, CHAPTER 1, ARTICLE 2, SECTIONS 1770, 1773 AND 1773.1

FOR COMMERCIAL BUILDING, HIGHWAY, HEAVY CONSTRUCTION AND DREDGING PROJECTS

LOCALITY: ALAMEDA COUNTY

DETERMINATION: ALA-2014-2

		CRAFT (JOURNEY LEVEL)	ISSUE DATE	EXPIRATION DATE	EMPLOYER PAYMENTS: BASIC HOURLY RATE	HEALTH AND WELFARE	PENSION	VACATION/ HOLIDAY	TRAINING	OTHER PAYMENTS	STRAIGHT-TIME: HOURS	TOTAL HOURLY RATE	OVERTIME HOURLY RATE: DAILY	SATURDAY	SUNDAY AND HOLIDAY
#		**BRICKLAYER, BLOCKLAYER:**													
		BRICKLAYER, BLOCKLAYER, STONEMASON	8/22/2013	04/30/2014*	A 37.980	9.690	10.000	B 3.000	0.800	C 1.230	D 8.0	62.700	E 83.190	E 83.190	103.680
		POINTER, CLEANER, CAULKER, WATERPROOFER	8/22/2014	06/30/2015*	A 42.080	9.690	10.520	F -	1.440	0.400	D 8.0	64.130	85.170	G 85.170	106.210
#		**BRICK TENDER**	8/22/2013	04/30/2014*	A 32.130	9.500	9.900	F -	0.340	-	8.0	51.870	H 67.930	H 67.930	84.000
#		**CARPET, LINOLEUM,**													
		SOFT FLOOR LAYER	8/22/2014	06/30/2015*	A 44.820	9.700	8.050	I -	0.530	0.340	8.0	63.440	J 85.850	J 85.850	108.260
		FLOOR COVERING HANDLER AFTER 3 YEARS	8/22/2014	06/30/2015*	A 22.390	9.700	4.030	I -	0.050	0.340	8.0	36.510	J 47.700	J 47.700	58.900
		FLOOR COVERING HANDLER LESS THAN 3 YEARS	8/22/2014	06/30/2015*	A 17.900	9.700	3.220	I -	0.050	0.340	8.0	31.210	J 40.160	J 40.160	49.110
		FLOOR COVERING HANDLER TRAINEE, FIRST 3 MONTHS	8/22/2014	06/30/2015*	A 14.310	9.700	2.580	I -	0.050	0.340	8.0	26.980	J 34.140	J 34.140	41.290
		FLOOR COVERING HANDLER TRAINEE, SECOND 3 MONTHS	8/22/2014	06/30/2015*	A 16.110	9.700	2.900	I -	0.050	0.340	8.0	29.100	J 37.160	J 37.160	45.210
#		**ELECTRICIAN:**													
		COMM & SYSTEM INSTALLER	2/22/2014	11/30/2014*	31.320	9.550	K 4.650	-	1.100	L 0.210	8.0	47.930	M 64.140	M 64.140	80.350
		COMM & SYSTEM TECH.	2/22/2014	11/30/2014*	35.660	9.550	K 4.650	-	1.100	L 0.210	8.0	52.420	M 70.870	M 70.870	89.330
		INSIDE WIREMAN,	8/22/2014	05/31/2015**	49.150	15.410	N 12.620	F -	1.780	O 1.110	8.0	81.540	P 107.120	132.690	132.690
		CABLE SPLICER-WELDER	8/22/2014	05/31/2015**	55.290	15.410	N 12.620	F -	1.780	O 1.180	8.0	87.940	P 116.710	145.480	145.480
#		**FIELD SURVEYOR:**													
	Q	CHIEF OF PARTY	2/22/2014	02/28/2015*	37.290	12.530	R 10.000	S 3.380	0.720	0.160	8.0	64.080	T 82.720	U 82.720	101.370
	Q	INSTRUMENTMAN	2/22/2014	02/28/2015*	34.200	12.530	R 10.000	S 3.380	0.720	0.160	8.0	60.990	T 78.090	U 78.090	95.190
	Q	CHAINMAN/RODMAN	2/22/2014	02/28/2015*	31.320	12.530	R 10.000	S 3.380	0.720	0.160	8.0	58.110	T 73.770	U 73.770	89.430
#		**GLAZIER**	8/22/2014	06/30/2015*	A 41.830	9.700	V 12.140	-	0.500	W 0.380	8.0	64.550	X 85.470	106.380	106.380
#	Y	**MARBLE FINISHER**	8/22/2013	07/31/2014*	Z 28.050	9.690	3.870	I -	0.450	0.530	8.0	42.590	AA 56.610	70.640	70.640
#	Y	**MARBLE MASON**	8/22/2013	07/31/2014*	Z 39.300	9.690	11.990	I -	0.800	0.730	8.0	62.510	AA 82.160	101.810	101.810
#		**PAINTER:**													
		BRUSH AND SPRAY	2/22/2014	06/30/2014*	AB 34.830	9.700	R 10.680	I -	0.410	0.380	D 8.0	56.000	73.420	AC 73.420	90.830
		INDUSTRIAL PAINTER	2/22/2014	06/30/2014*	AB 35.080	9.700	R 10.680	I -	0.410	0.380	D 8.0	56.250	73.790	AC 73.790	91.330
		SANDBLASTER, STEAM CLEANER, WATERBLASTER	2/22/2014	06/30/2014*	AB 35.330	9.700	R 10.680	I -	0.410	0.380	D 8.0	56.500	74.170	AC 74.170	91.830
		EXOTIC MATERIALS	2/22/2014	06/30/2014*	AB 35.580	9.700	R 10.680	I -	0.410	0.380	D 8.0	56.750	74.540	AC 74.540	92.330
		PAPERHANGER/WALLCOVERING	2/22/2014	06/30/2014*	AB 35.830	9.700	R 10.680	I -	0.410	0.380	D 8.0	57.000	74.920	AC 74.920	92.830
		TAPER	8/22/2014	06/30/2015*	AD 40.320	9.700	10.540	AE -	0.360	0.290	8.0	61.210	77.910	D 77.910	AC 94.620
	AF	TAPER CLEAN-UP	8/22/2014	06/30/2015*	AG 16.100	9.700	-	-	-	-	8.0	25.800	33.360	D 33.360	AC 40.920
#		**PLASTERER**	8/22/2014	06/30/2015**	AH 37.480	12.530	10.630	F -	1.050	0.900	D 8.0	62.590	AI 78.760	AI 78.760	94.930
#	AJ	**PLASTER TENDER**	8/22/2014	06/30/2015**	AK 32.400	9.080	12.420	F -	0.340	0.580	8.0	54.820	AL 68.470	AL 68.470	82.120
	AJ	GUN MAN	8/22/2014	06/30/2015**	AK 33.150	9.080	12.420	F -	0.340	0.580	8.0	55.570	AL 69.600	AL 69.600	83.620
#		**PLUMBER:**													
		PLUMBER, PIPEFITTER, STEAMFITTER	8/22/2014	06/30/2015*	A 54.710	AM 16.550	AN 12.840	-	3.700	0.300	8.0	91.100	E 120.210	E 120.210	149.320
		UNDERGROUND UTILITY PIPEFITTER	8/22/2014	06/30/2015**	26.550	5.800	AM 3.000	2.000	0.450	0.600	D 8.0	38.400	51.670	51.670	64.950
		LANDSCAPE PIPEFITTER	8/22/2014	06/30/2015**	26.550	5.800	AM 3.000	2.000	0.450	0.600	D 8.0	38.400	51.670	51.670	64.950
	AO	UNDERGROUND UTILITY ASSISTANT JOURNEYMAN	8/22/2014	06/30/2015**	15.550	5.800	AM 3.000	2.000	0.450	0.600	D 8.0	27.400	35.170	35.170	42.950
	AO	LANDSCAPE ASSISTANT JOURNEYMAN	8/22/2014	06/30/2015**	15.550	5.800	AM 3.000	2.000	0.450	0.600	D 8.0	27.400	35.170	35.170	42.950
	AP	UNDERGROUND UTILITY TRADESMAN	8/22/2014	06/30/2015**	10.850	5.800	AM 3.000	2.000	0.450	0.600	D 8.0	22.700	28.130	28.130	33.550
	AQ	LANDSCAPE TRADESMAN I	8/22/2014	06/30/2015**	10.500	5.800	AM -	2.000	0.450	0.600	D 8.0	19.350	24.600	24.600	29.850
	AQ	LANDSCAPE TRADESMAN II	8/22/2014	06/30/2015**	10.850	5.800	AM 3.000	2.000	0.450	0.600	D 8.0	22.700	28.130	28.130	33.550

DocuSign Envelope ID: 894511EA-295B-49EB-A393-D26A6837FDD4

GENERAL PREVAILING WAGE DETERMINATION MADE BY THE DIRECTOR OF INDUSTRIAL RELATIONS

PURSUANT TO CALIFORNIA LABOR CODE PART 7, CHAPTER 1, ARTICLE 2, SECTIONS 1770, 1773 AND 1773.1

FOR COMMERCIAL BUILDING, HIGHWAY, HEAVY CONSTRUCTION AND DREDGING PROJECTS

LOCALITY: ALAMEDA COUNTY

DETERMINATION: ALA-2014-2

				EMPLOYER PAYMENTS						STRAIGHT-TIME		OVERTIME HOURLY RATE		
CRAFT (JOURNEY LEVEL)	ISSUE DATE	EXPIRATION DATE	BASIC HOURLY RATE	HEALTH AND WELFARE	PENSION	VACATION/ HOLIDAY	TRAINING	OTHER PAYMENTS	HOURS	TOTAL HOURLY RATE	DAILY	SATURDAY	SUNDAY AND HOLIDAY
SPRINKLER FITTER (FIRE PROTECTION AND FIRE CONTROL SYSTEMS)	2/22/2014	07/31/2014*	A 52.420	8.770	15.500	F -	1.100	0.400	8.0	78.190	104.400	104.400	130.610
# **ROOFER**	8/22/2014	07/31/2015*	31.550	8.140	5.230	3.510	0.550	0.440	D 8.0	49.420	J 65.190	J 65.190	80.970
BITUMASTIC, ENAMELER, PIPE WRAPPER, COAL TAR PITCH BUILD-UP	8/22/2014	07/31/2015*	33.550	8.140	5.230	3.510	0.550	0.440	D 8.0	51.420	J 68.190	J 68.190	84.970
MASTIC WORKER, KETTLEMAN	8/22/2014	07/31/2015*	31.800	8.140	5.230	3.510	0.550	0.440	D 8.0	49.670	J 65.570	J 65.570	81.470
# **SHEET METAL WORKER**	8/22/2014	06/30/2015*	AB 54.850	AR 13.110	AM 21.120	F -	1.410	1.150	8.0	91.640	AS 119.060	AS 119.060	146.490
TOTAL SHEET METAL CONTRACT OF $200,000 OR LESS	8/22/2014	06/30/2015*	AB 48.790	AR 13.110	AM 20.500	F -	1.410	1.150	8.0	84.960	AS 109.350	AS 109.350	133.750
SERVICE MECHANIC (TOTAL SHEET METAL CONTRACT OF $200,000 OR LESS)	8/22/2014	06/30/2015*	AB 35.840	AT 12.590	AM 13.060	F -	1.310	1.150	8.0	63.950	AU 81.870	AU 81.870	99.790
SERVICE TECHNICIAN (TOTAL SHEET METAL CONTRACT OF $200,000 OR LESS)	8/22/2014	06/30/2015*	AB 31.550	AT 12.590	AM 8.930	F -	1.310	1.150	8.0	55.530	AU 71.300	AU 71.300	87.080
AIR CONDITIONING SPECIALIST (TOTAL SHEET METAL CONTRACT OF $200,000 OR LESS)	8/22/2014	06/30/2015*	AB 28.320	AT 12.590	AM 3.770	F -	1.290	1.150	8.0	47.120	AS 61.280	AS 61.280	75.440
AIR CONDITIONING JOURNEYMAN (TOTAL SHEET METAL CONTRACT OF $200,000 OR LESS)	8/22/2014	06/30/2015*	AB 33.130	AR 12.610	AM 8.770	F -	1.290	1.150	8.0	56.950	AS 73.510	AS 73.510	90.080
METAL DECK & SIDING	8/22/2014	12/31/2014*	AB 33.860	AM 13.530	18.000	F -	AV 0.300	-	8.0	65.690	AS 82.620	AS 82.620	99.550
# AW **TERRAZZO FINISHER**	8/22/2014	06/30/2015**	AD 33.190	9.690	5.120	F -	0.800	0.490	8.0	49.290	AS 63.780	AS 63.780	78.280
# AW **TERRAZZO WORKER**	8/22/2014	06/30/2015**	AD 40.420	9.690	14.420	F -	0.800	0.670	8.0	66.000	AS 83.540	AS 83.540	101.080
# **TILE FINISHER**	8/22/2014	03/31/2015**	AX 22.060	8.530	3.440	0.700	0.400	1.090	8.0	36.220	47.250	D 47.250	58.280
RED CIRCLED FINISHER	8/22/2014	03/31/2015**	AX 27.750	8.530	3.670	1.300	0.300	1.100	8.0	42.650	56.530	D 56.530	70.400
# **TILE SETTER**	8/22/2014	03/31/2015**	AX 38.240	8.530	4.670	2.350	0.590	1.680	8.0	56.060	75.180	D 75.180	94.300
WATER WELL DRILLER	8/22/1998	12/31/1998*	12.700	3.200	0.780	AY 0.630	-	-	8.0	17.310	AZ 23.660	AZ 23.660	AZ 23.660
PUMP INSTALLER	8/22/1998	12/31/1998*	12.700	3.200	0.780	AY 0.630	-	-	8.0	17.310	AZ 23.660	AZ 23.660	AZ 23.660
HELPER	8/22/1998	12/31/1998*	10.380	3.200	0.780	BA 0.520	-	-	8.0	14.880	AZ 20.070	AZ 20.070	AZ 20.070

FOOTNOTES

DocuSign Envelope ID: 894511EA-295B-49EB-A393-D26A6837FDD4

GENERAL PREVAILING WAGE DETERMINATION MADE BY THE DIRECTOR OF INDUSTRIAL RELATIONS

PURSUANT TO CALIFORNIA LABOR CODE PART 7, CHAPTER 1, ARTICLE 2, SECTIONS 1770, 1773 AND 1773.1

LOCALITY: ALAMEDA COUNTY

DETERMINATION: ALA-2014-2

*	EFFECTIVE UNTIL SUPERSEDED BY A NEW DETERMINATION ISSUED BY THE DIRECTOR OF INDUSTRIAL RELATIONS. CONTACT THE OFFICE OF THE DIRECTOR – RESEARCH UNIT AT (415) 703-4774 FOR NEW RATES AFTER TEN DAYS AFTER THE EXPIRATION DATE IF NO SUBSEQUENT DETERMINATION IS ISSUED.
**	THE RATE TO BE PAID FOR WORK PERFORMED AFTER THIS DATE HAS BEEN DETERMINED. IF WORK WILL EXTEND PAST THIS DATE, THE NEW RATE MUST BE PAID AND SHOULD BE INCORPORATED IN CONTRACTS ENTERED INTO NOW. CONTACT THE OFFICE OF THE DIRECTOR – RESEARCH UNIT FOR SPECIFIC RATES AT (415) 703-4774.
#	INDICATES AN APPRENTICEABLE CRAFT. THE CURRENT APPRENTICE WAGE RATES ARE AVAILABLE ON THE INTERNET @ HTTP://WWW.DIR.CA.GOV/OPRL/PWAPPWAGE/PWAPPWAGESTART.ASP. TO OBTAIN ANY APPRENTICE WAGE RATES AS OF JULY 1, 2008 AND PRIOR TO SEPTEMBER 27, 2012, PLEASE CONTACT THE DIVISION OF APPRENTICESHIP STANDARDS OR REFER TO THE DIVISION OF APPRENTICESHIP STANDARDS' WEBSITE AT HTTP://WWW.DIR.CA.GOV/DAS/DAS.HTML.
&	THE BASIC HOURLY RATE AND EMPLOYER PAYMENTS ARE NOT TAKEN FROM A COLLECTIVE BARGAINING AGREEMENT FOR THIS CRAFT OR CLASSIFICATION.
A	INCLUDES AMOUNT WITHHELD FOR DUES CHECK OFF.
B	AMOUNT INCLUDED IN FACTORING OVERTIME RATES.
C	INCLUDES AMOUNT FOR INDUSTRY PROMOTION FUND, INTERNATIONAL MASONRY INSTITUTE (IMI), AND LABOR MANAGEMENT COOPERATION COMMITTEE (LMCC)
D	SATURDAYS IN THE SAME WORK WEEK MAY BE WORKED AT STRAIGHT-TIME IF JOB IS SHUT DOWN DURING THE NORMAL WORKWEEK DUE TO INCLEMENT WEATHER.
E	RATE APPLIES TO THE FIRST 2 DAILY OVERTIME HOURS AND THE FIRST 10 HOURS ON SATURDAY; ALL OTHER TIME IS PAID AT THE SUNDAY AND HOLIDAY OVERTIME HOURLY RATE.
F	INCLUDED IN STRAIGHT-TIME HOURLY RATE.
G	RATE APPLIES TO THE FIRST 10 HOURS WORKED ON SATURDAY. ALL OTHER HOURS ARE PAID AT THE SUNDAY/HOLIDAY RATE.
H	RATE APPLIES TO THE FIRST 2 DAILY OVERTIME HOURS AND THE FIRST 8 HOURS ON SATURDAY ONLY. ALL OTHER TIME IS PAID AT THE SUNDAY AND HOLIDAY OVERTIME HOURLY RATE. SATURDAYS IN THE SAME WORK WEEK MAY BE WORKED AT STRAIGHT-TIME IF JOB IS SHUT DOWN DURING THE NORMAL WORKWEEK DUE TO INCLEMENT WEATHER.
I	INCLUDED IN BASIC HOURLY RATE.
J	RATE APPLIES TO THE FIRST 4 DAILY OVERTIME HOURS AND THE FIRST 12 HOURS WORKED ON SATURDAY; ALL OTHER TIME IS PAID AT THE SUNDAY AND HOLIDAY OVERTIME HOURLY RATE.
K	IN ADDITION, AN AMOUNT EQUAL TO 3% OF THE BASIC HOURLY RATE IS ADDED TO THE TOTAL HOURLY RATE AND OVERTIME HOURLY RATES FOR THE NATIONAL EMPLOYEES BENEFIT BOARD.
L	IN ADDITION, AN AMOUNT EQUAL TO 0.5% OF THE BASIC HOURLY RATE, WHICH IS FACTORED AT THE APPLICABLE OVERTIME MULTIPLIER, IS ADDED TO THE TOTAL HOURLY RATE AND OVERTIME HOURLY RATES.
M	RATE APPLIES TO THE FIRST 4 DAILY OVERTIME HOURS AND THE FIRST 8 HOURS WORKED ON SATURDAY. ALL OTHER TIME IS PAID AT THE SUNDAY AND HOLIDAY OVERTIME RATE.
N	IN ADDITION, AN AMOUNT EQUAL TO 3% OF THE BASIC HOURLY RATE IS ADDED TO THE TOTAL HOURLY RATE AND OVERTIME HOURLY RATES FOR THE NATIONAL EMPLOYEES BENEFIT BOARD. PURSUANT LABOR CODE SECTIONS 1773.1 AND 1773.8, THE AMOUNT PAID FOR THIS EMPLOYER PAYMENT MAY VARY RESULTING IN A LOWER TAXABLE BASIC HOURLY WAGE RATE, BUT THE TOTAL HOURLY RATES FOR STRAIGHT TIME AND OVERTIME MAY NOT BE LESS THAN THE GENERAL PREVAILING RATE OF PER DIEM WAGES.
O	INCLUDES AN AMOUNT (1.05% OF THE BASIC HOURLY RATE) FOR THE CONTRACT ADMINISTRATION FUND, WHICH IS FACTORED AT THE APPLICABLE OVERTIME MULTIPLIER.
P	THIS APPLIES TO DAILY OVERTIME RATE FOR THE FIRST SHIFT IN A MULTISHIFT OPERATION AND THE FIRST 2 HOURS OF DAILY OVERTIME FOR NON-SHIFT WORK. ALL OTHER NON-SHIFT WORK IS P AT THE SATURDAY, SUNDAY AND HOLIDAY RATE.
Q	ALL CREWS, WITHOUT CONSIDERATION TO THE NUMBER OF INDIVIDUALS IN THE CREW, SHALL INCLUDE A CHIEF OF PARTY. A CREW CONSISTS OF ONE (1) OR MORE EMPLOYEES PERFORMING FIELD AND CONSTRUCTION SURVEY WORK.
R	INCLUDES AN AMOUNT PER HOUR WORKED FOR ANNUITY TRUST FUND.
S	INCLUDES AN AMOUNT PER HOUR WORKED FOR SUPPLEMENTAL DUES.
T	RATE APPLIES TO THE FIRST 4 DAILY OVERTIME HOURS, MONDAY THROUGH FRIDAY. ALL OTHER OVERTIME IS PAID AT THE SUNDAY/HOLIDAY RATE.
U	RATE APPLIES TO THE FIRST 12 OVERTIME HOURS WORKED. ALL OTHER OVERTIME IS PAID AT THE SUNDAY/HOLIDAY RATE. IN THE EVENT IT IS NOT REASONABLY POSSIBLE TO COMPLETE 40 HOURS OF WORK ON AN 8 HOUR DAY, MONDAY THROUGH FRIDAY, THEN THE BALANCE OF THE 40 HOURS, UP TO 8 HOURS, MAY BE WORKED ON SATURDAY AT THE STRAIGHT-TIME RATE.
V	INCLUDES AN AMOUNT PER HOUR WORKED FOR IUPAT, IARP, AND RETIREE PENSION.
W	INCLUDES AMOUNTS FOR INDUSTRY FUND, WORK PRESERVATION FUND, AND LABOR MANAGEMENT COOPERATION INITIATIVE
X	RATE APPLIES TO THE FIRST 2 DAILY OVERTIME HOURS AND FIRST 8 HOURS WORKED ON DESIGNATED DAYS OFF; ALL OTHER TIME IS PAID AT THE SATURDAY, SUNDAY AND HOLIDAY OVERTIME RATE.
Y	EMPLOYEES WORKING ON ANY SUSPENDED PLATFORM/SCAFFOLD SHALL BE PAID AN ADDITIONAL $15.00 PER DAY ABOVE THE WAGE RATE.
Z	INCLUDES AN AMOUNT FOR DUES CHECK-OFF AND VACATION/HOLIDAY WHICH ARE FACTORED INTO OVERTIME RATES.
AA	RATE APPLIES TO FIRST 2 OVERTIME HOURS MONDAY THROUGH FRIDAY; ALL OTHER OVERTIME IS PAID AT THE DOUBLE TIME RATE.
AB	INCLUDES AMOUNT FOR VAC/HOL AND DUES CHECK OFF.
AC	DESIGNATED DAYS OFF SHALL BE PAID AT THE SATURDAY OVERTIME RATE; PLEASE REFER TO THE HOLIDAY PROVISIONS FOR A LIST OF DESIGNATED DAYS OFF.
AD	INCLUDES AN AMOUNT FOR VACATION/DUES CHECK OFF WHICH IS NOT FACTORED IN THE OVERTIME RATES.
AE	INCLUDED IN STRAIGHT-TIME HOURLY RATE WHICH IS NOT FACTORED IN THE OVERTIME RATES.
AF	PLEASE NOTE THAT THE TAPER CLEAN-UP APPLIES ONLY TO THE TAPER CLASSIFICATION.

DocuSign Envelope ID: 894511EA-295B-49EB-A393-D26A6837FDD4

AG INCLUDES AN AMOUNT WITHHELD FOR DUES CHECK OFF WHICH IS NOT FACTORED IN OVERTIME AND HOLIDAY WAGE RATES.

AH INCLUDE AMOUNTS WITHHELD FOR DUES CHECK OFF AND VACATION WHICH IS NOT FACTORED INTO OVERTIME. EMPLOYEES OPERATING AND WORKING BEHIND PLASTER GUNS SHALL RECEIVE AN ADDITIO $5.00 PER DAY ABOVE THE WAGE RATE. EMPLOYEES WORKING ON AN EXTERIOR SUSPENDED SCAFFOLD SHALL BE PAID AN ADDITIONAL $10.00 PER DAY ABOVE THE WAGE RATE.

AI RATE APPLIES TO THE FIRST 4 OVERTIME HOURS MONDAY THROUGH FRIDAY AND THE FIRST 8 HOURS WORKED ON SATURDAYS AND DESIGNATED DAYS OFF. ALL OTHER TIME IS PAID AT THE SUNDAY AND HOLIDAY OVERTIME RATE.

AJ ALL HOD CARRIERS WORKING ON THE HOSE SHALL RECEIVE $5.00 PER DAY OVER SCALE.

AK INCLUDES AN AMOUNT FOR VACATION, DUES CHECK-OFF AND ORGANIZING DUES WHICH ARE NOT FACTORED INTO OVERTIME.

AL RATE APPLIES TO THE FIRST 4 OVERTIME HOURS MONDAY THROUGH FRIDAY AND THE FIRST 8 HOURS WORKED ON SATURDAY. ALL OTHER TIME IS PAID AT THE SUNDAY AND HOLIDAY OVERTIME RATE.

AM PURSUANT TO LABOR CODE SECTIONS 1773.1 AND 1773.8, THE AMOUNT PAID FOR THIS EMPLOYER PAYMENT MAY VARY RESULTING IN A LOWER TAXABLE BASIC HOURLY WAGE RATE, BUT THE TOTAL HOURLY RATES FOR STRAIGHT TIME AND OVERTIME MAY NOT BE LESS THAN THE GENERAL PREVAILING RATE OF PER DIEM WAGES.

AN IN ADDITION, AN AMOUNT OF $3.00 FOR 401A SUPPLEMENTAL PENSION, WHICH IS FACTORED AT THE APPLICABLE OVERTIME MULTIPLIER, IS ADDED TO THE TOTAL HOURLY RATE AND OVERTIME HOU RATE. PURSUANT TO LABOR CODE SECTIONS 1773.1 AND 1773.8, THE AMOUNT PAID FOR THIS EMPLOYER PAYMENT MAY VARY RESULTING IN A LOWER TAXABLE BASIC HOURLY WAGE RATE, BUT THE TO HOURLY RATES FOR STRAIGHT TIME AND OVERTIME MAY NOT BE LESS THAN THE GENERAL PREVAILING RATE OF PER DIEM WAGES.

AO THERE MUST BE AT LEAST ONE JOURNEYMAN PIPEFITTER PER CONTRACTOR ON EACH JOBSITE.

AP THERE SHALL BE NO MORE THAN THREE TRADESMEN TO EVERY TWO JOURNEYMAN PIPEFITTER/ASSISTANT JOURNEYMAN PIPEFITTER COMBINATION EMPLOYED PER CONTRACTOR ON EACH JOBSITE.

AQ THERE SHALL BE NO MORE THAN FOUR TRADESMEN TO EVERY TWO JOURNEYMAN PIPEFITTER/ASSISTANT JOURNEYMAN PIPEFITTER COMBINATION EMPLOYED PER CONTRACTOR ON EACH JOBSITE. MAINTENANCE WORK, BOTH DURING AND AFTER THE PLANT ESTABLISHMENT PERIOD, MAY BE PERFORMED BY LANDSCAPE TRADESMEN WITHOUT THE SUPERVISION OF A JOURNEYMAN PIPEFITTER.

AR INCLUDES SMOHIT AND SHC. EFFECTIVE 1/1/2013, PURSUANT TO LABOR CODE SECTIONS 1773.1 AND 1773.8, THE AMOUNT PAID FOR THIS EMPLOYER PAYMENT MAY VARY RESULTING IN A LOWER TAXABLE BASIC HOURLY WAGE RATE, BUT THE TOTAL HOURLY RATES FOR STRAIGHT TIME AND OVERTIME MAY NOT BE LESS THAN THE GENERAL PREVAILING RATE OF PER DIEM WAGES.

AS RATE APPLIES TO THE FIRST 2 DAILY OVERTIME HOURS AND THE FIRST 8 HOURS ON SATURDAY ONLY; ALL OTHER TIME IS PAID AT THE SUNDAY AND HOLIDAY OVERTIME HOURLY RATE.

AT INCLUDES SHC. EFFECTIVE 1/1/2013, PURSUANT TO LABOR CODE SECTIONS 1773.1 AND 1773.8, THE AMOUNT PAID FOR THIS EMPLOYER PAYMENT MAY VARY RESULTING IN A LOWER TAXABLE BASIC HOURLY WAGE RATE, BUT THE TOTAL HOURLY RATES FOR STRAIGHT TIME AND OVERTIME MAY NOT BE LESS THAN THE GENERAL PREVAILING RATE OF PER DIEM WAGES.

AU RATE APPLIES TO FIRST 4 DAILY OVERTIME HOURS AND THE FIRST 8 HOURS WORKED ON SATURDAY DURING THE EMPLOYEES NORMAL WORKING HOURS. ALL OTHER OVERTIME HOURS SHALL BE PAID AT THE SUNDAY AND HOLIDAY DOUBLE TIME RATE.

AV INCLUDES $0.03 FOR SCHOLAR FUND.

AW THE RATIO OF TERRAZZO FINISHER HOURS TO TERRAZZO WORKER HOURS SHALL NOT EXCEED TWO (2) TO ONE (1).

AX INCLUDES AMOUNT WITHHELD FOR DUES CHECK OFF, WHICH IS FACTORED IN THE OVERTIME RATES. ANY EMPLOYEE WORKING UNDERGROUND SHALL RECEIVE $1.00 PER HOUR IN ADDITION TO REGULAR WAGES.

AY RATE APPLIES TO FIRST YEAR OF EMPLOYMENT ONLY; $0.88 AFTER 2 YEARS OF EMPLOYMENT.

AZ RATE APPLIES TO ALL TIME WORKED IN EXCESS OF 8 HOURS PER DAY OR 40 HOURS PER WEEK AND FOR ALL HOURS ON SUNDAYS AND HOLIDAYS. RATE DOES NOT INCLUDE ANY ADDITIONAL AMOUNT THAT MAY BE REQUIRED FOR VACATION/HOLIDAY PAYMENT.

BA RATE APPLIES TO FIRST YEAR OF EMPLOYMENT ONLY; $0.72 AFTER 2 YEARS OF EMPLOYMENT.

RECOGNIZED HOLIDAYS: HOLIDAYS UPON WHICH THE GENERAL PREVAILING HOURLY WAGE RATE FOR HOLIDAY WORK SHALL BE PAID, SHALL BE ALL HOLIDAYS IN THE COLLECTIVE BARGAINING AGREEME APPLICABLE TO THE PARTICULAR CRAFT, CLASSIFICATION, OR TYPE OF WORKER EMPLOYED ON THE PROJECT, WHICH IS ON FILE WITH THE DIRECTOR OF INDUSTRIAL RELATIONS. IF THE PREVAIL RATE IS NOT BASED ON A COLLECTIVELY BARGAINED RATE, THE HOLIDAYS UPON WHICH THE PREVAILING RATE SHALL BE PAID SHALL BE AS PROVIDED IN SECTION 6700 OF THE GOVERNMENT CODE. YOU MAY OBTAIN THE HOLIDAY PROVISIONS FOR THE CURRENT DETERMINATIONS ON THE INTERNET AT HTTP://WWW.DIR.CA.GOV/OPRL/PWD. HOLIDAY PROVISIONS FOR CURRENT OR SUPERSEDED DETERMINATIONS MAY BE OBTAINED BY CONTACTING THE OFFICE OF THE DIRECTOR - RESEARCH UNIT AT (415) 703-4774.

TRAVEL AND/OR SUBSISTENCE PAYMENT: IN ACCORDANCE WITH LABOR CODE SECTIONS 1773.1 AND 1773.9, CONTRACTORS SHALL MAKE TRAVEL AND/OR SUBSISTENCE PAYMENTS TO EACH WORKER TO EXECUTE THE WORK. YOU MAY OBTAIN THE TRAVEL AND/OR SUBSISTENCE PROVISIONS FOR THE CURRENT DETERMINATIONS ON THE INTERNET @ HTTP://WWW.DIR.CA.GOV/OPRL/PWD. TRAVEL AND/OR SUBSISTENCE REQUIREMENTS FOR CURRENT OR SUPERSEDED DETERMINATIONS MAY BE OBTAINED FROM THE OFFICE OF THE DIRECTOR - RESEARCH UNIT AT (415) 703-4774.

ALA-2014-2-Determination

DocuSign Envelope ID: 894511EA-295B-49EB-A393-D26A6837FDD4

GENERAL PREVAILING WAGE DETERMINATION MADE AY THE DIRECTOR OF INDUSTRIAL RELATIONS

PURSUANT TO CALIFORNIA LAAOR CODE PART 7, CHAPTER 1, ARTICLE 2, SECTIONS 1770, 1773 AND 1773.1

FOR COMMERCIAL AUILDING, HIGHWAY, HEAVY CONSTRUCTION AND DREDGING PROJECTS

LOCALITY: ALAMEDA COUNTY

DETERMINATION: ALA-2014-2

				INCREASE 1		INCREASE 2		INCREASE 3		INCREASE 4		INCREASE 5		INCREASE 6		INCR
	CRAFT (JOURNEY LEVEL)	ISSUE DATE	EXPIRATION DATE	DATE OF NEXT CHANGE	AMOUNT OF INCREASE	DATE OF NEXT CHANGE	AMOUNT OF INCREASE	DATE OF NEXT CHANGE	AMOUNT OF INCREASE	DATE OF NEXT CHANGE	AMOUNT OF INCREASE	DATE OF NEXT CHANGE	AMOUNT OF INCREASE	DATE OF NEXT CHANGE	AMOUNT OF INCREASE	DATE OF NEXT CHANGE
	ELECTRICIAN:															
	INSIDE WIREMAN,	8/22/2014	05/31/2015**	6/1/2015	$3.25 A											
	CABLE SPLICER-WELDER	8/22/2014	05/31/2015**	6/1/2015	$3.25 A											
	PLASTERER	8/22/2014	06/30/2015**	7/1/2015	$1.70 A	7/1/2016	$1.70 A									
B	**PLASTER TENDER**	8/22/2014	06/30/2015**	7/1/2015	$0.60 C											
B	GUN MAN	8/22/2014	06/30/2015**	7/1/2015	$0.60 C											
	PLUMBER:															
	UNDERGROUND UTILITY PIPEFITTER	8/22/2014	06/30/2015**	7/1/2015	$0.85 D	7/1/2016	$0.80 E									
	LANDSCAPE PIPEFITTER	8/22/2014	06/30/2015**	7/1/2015	$0.85 D	7/1/2016	$0.80 E									
F	UNDERGROUND UTILITY ASSISTANT JOURNEYMAN	8/22/2014	06/30/2015**	7/1/2015	$0.85 D	7/1/2016	$0.80 E									
F	LANDSCAPE ASSISTANT JOURNEYMAN	8/22/2014	06/30/2015**	7/1/2015	$0.85 D	7/1/2016	$0.80 E									
G	UNDERGROUND UTILITY TRADESMAN	8/22/2014	06/30/2015**	7/1/2015	$0.85 D	7/1/2016	$0.80 E									
H	LANDSCAPE TRADESMAN I	8/22/2014	06/30/2015**	7/1/2015	$0.85 D	7/1/2016	$0.80 E									
H	LANDSCAPE TRADESMAN II	8/22/2014	06/30/2015**	7/1/2015	$0.85 D	7/1/2016	$0.80 E									
I	**TERRAZZO FINISHER**	8/22/2014	06/30/2015**	7/1/2015	$0.75 A	7/1/2016	$1.00 A	7/1/2017	$1.00 A	7/1/2018	$1.25 A					
I	**TERRAZZO WORKER**	8/22/2014	06/30/2015**	7/1/2015	$1.25 A	7/1/2016	$1.50 A	7/1/2017	$1.75 A	7/1/2018	$2.00 A					
	TILE FINISHER	8/22/2014	03/31/2015**	4/1/2015	$1.14 A											
	RED CIRCLED FINISHER	8/22/2014	03/31/2015**	4/1/2015	$1.14 A											
	TILE SETTER	8/22/2014	03/31/2015**	4/1/2015	$1.75 A											

FOOTNOTES

DocuSign Envelope ID: 894511EA-295B-49EB-A393-D26A6837FDD4

EASE 7
AMOUNT OF INCREASE

DocuSign Envelope ID: 894511EA-295B-49EB-A393-D26A6837FDD4

GENERAL PREVAILING WAGE DETERMINATION MADE BY THE DIRECTOR OF INDUSTRIAL RELATIONS

PURSUANT TO CALIFORNIA LABOR CODE PART 7, CHAPTER 1, ARTICLE 2, SECTIONS 1770, 1773 AND 1773.1

LOCALITY: ALAMEDA COUNTY

DETERMINATION: ALA-2014-2

A THE PREDETERMINED INCREASE SHOWN IS TO BE ALLOCATED TO WAGES AND/OR EMPLOYER PAYMENTS. PLEASE CONTACT THE OFFICE OF THE DIRECTOR - RESEARCH UNIT AT (415) 703-4774 WHEN THE PREDETERMINED INCREASE BECOMES DUE TO CONFIRM THE DISTRIBUTION. PLEASE ALSO EXAMINE THE IMPORTANT NOTICES TO SEE IF ANY MODIFICATIONS HAVE BEEN ISSUED, AS THERE MAY BE REDUCTIONS TO PREDETERMINED INCREASES.

B ALL HOD CARRIERS WORKING ON THE HOSE SHALL RECEIVE $5.00 PER DAY OVER SCALE.

C $0.25 TO HEALTH AND WELFARE AND $0.35 TO PENSION.

D $0.05 TO THE BASIC HOURLY RATE AND $0.80 TO HEALTH AND WELFARE

E $0.10 TO THE BASIC HOURLY RATE, $0.60 TO HEALTH AND WELFARE, AND $0.10 TO VACATION

F THERE MUST BE AT LEAST ONE JOURNEYMAN PIPEFITTER PER CONTRACTOR ON EACH JOBSITE.

G THERE SHALL BE NO MORE THAN THREE TRADESMEN TO EVERY TWO JOURNEYMAN PIPEFITTER/ASSISTANT JOURNEYMAN PIPEFITTER COMBINATION EMPLOYED PER CONTRACTOR ON EACH JOBSITE.

H THERE SHALL BE NO MORE THAN FOUR TRADESMEN TO EVERY TWO JOURNEYMAN PIPEFITTER/ASSISTANT JOURNEYMAN PIPEFITTER COMBINATION EMPLOYED PER CONTRACTOR ON EACH JOBSITE. MAINTENANCE WORK, BOTH DURING AND AFTER THE PLANT ESTABLISHMENT PERIOD, MAY BE PERFORMED BY LANDSCAPE TRADESMEN WITHOUT THE SUPERVISION OF A JOURNEYMAN PIPEFITTER.

I THE RATIO OF TERRAZZO FINISHER HOURS TO TERRAZZO WORKER HOURS SHALL NOT EXCEED TWO (2) TO ONE (1).

ALA-2014-2-INC

DocuSign Envelope ID: 894511EA-295B-49EB-A393-D26A6837FDD4

GENERAL PREVAILING WAGE DETERMINATION MADE BY THE DIRECTOR OF INDUSTRIAL RELATIONS
PURSUANT TO CALIFORNIA LABOR CODE PART 7, CHAPTER 1, ARTICLE 2, SECTIONS 1770, 1773 AND 1773.1
FOR COMMERCIAL BUILDING, HIGHWAY, HEAVY CONSTRUCTION AND DREDGING PROJECTS

LOCALITY: CONTRA COSTA COUNTY
DETERMINATION: CON-2014-2

					EMPLOYER PAYMENTS						STRAIGHT-TIME		OVERTIME HOURLY RATE		
	CRAFT (JOURNEY LEVEL)	ISSUE DATE	EXPIRATION DATE	BASIC HOURLY RATE	HEALTH AND WELFARE	PENSION	VACATION/ HOLIDAY	TRAINING	OTHER PAYMENTS	HOURS	TOTAL HOURLY RATE	DAILY	SATURDAY	SUNDAY AND HOLIDAY
#	**BRICKLAYER, BLOCKLAYER:**													
	BRICKLAYER, BLOCKLAYER, STONEMASON	8/22/2013	04/30/2014*	A 37.980	9.690	10.000	B 3.000	0.800	C 1.230	D 8.0	62.700	E 83.190	E 83.190	103.680
	POINTER, CLEANER, CAULKER, WATERPROOFER	8/22/2014	06/30/2015*	A 42.080	9.690	10.520	F -	1.440	0.400	D 8.0	64.130	85.170	G 85.170	106.210
#	**BRICK TENDER**	8/22/2013	04/30/2014*	A 32.130	9.500	9.900	F -	0.340	-	8.0	51.870	H 67.930	H 67.930	84.000
#	**CARPET, LINOLEUM,**													
	SOFT FLOOR LAYER	8/22/2014	06/30/2015*	A 44.820	9.700	8.050	I -	0.530	0.340	8.0	63.440	J 85.850	J 85.850	108.260
	FLOOR COVERING HANDLER AFTER 3 YEARS	8/22/2014	06/30/2015*	A 22.390	9.700	4.030	I -	0.050	0.340	8.0	36.510	J 47.700	J 47.700	58.900
	FLOOR COVERING HANDLER LESS THAN 3 YEARS	8/22/2014	06/30/2015*	A 17.900	9.700	3.220	I -	0.050	0.340	8.0	31.210	J 40.160	J 40.160	49.110
	FLOOR COVERING HANDLER TRAINEE, FIRST 3 MONTHS	8/22/2014	06/30/2015*	A 14.310	9.700	2.580	I -	0.050	0.340	8.0	26.980	J 34.140	J 34.140	41.290
	FLOOR COVERING HANDLER TRAINEE, SECOND 3 MONTHS	8/22/2014	06/30/2015*	A 16.110	9.700	2.900	I -	0.050	0.340	8.0	29.100	J 37.160	J 37.160	45.210
#	**ELECTRICIAN:**													
	COMM & SYSTEM INSTALLER	2/22/2014	11/30/2014*	31.320	9.550	K 4.650	-	1.100	L 0.210	8.0	47.930	M 64.140	M 64.140	80.350
	COMM & SYSTEM TECH.	2/22/2014	11/30/2014*	35.660	9.550	K 4.650	-	1.100	L 0.210	8.0	52.420	M 70.870	M 70.870	89.330
	INSIDE WIREMAN, TECHNICIAN	8/22/2014	05/31/2015*	A 45.260	13.100	K 10.000	-	0.670	N 0.810	8.0	71.200	O 94.510	O 94.510	117.820
	CABLE SPLICER	8/22/2014	05/31/2015*	A 51.670	13.100	K 10.000	-	0.670	N 0.810	8.0	77.800	O 104.410	O 104.410	131.020
#	**FIELD SURVEYOR:**													
P	CHIEF OF PARTY	2/22/2014	02/28/2015*	37.290	12.530	Q 10.000	R 3.380	0.720	0.160	8.0	64.080	S 82.720	T 82.720	101.370
P	INSTRUMENTMAN	2/22/2014	02/28/2015*	34.200	12.530	Q 10.000	R 3.380	0.720	0.160	8.0	60.990	S 78.090	T 78.090	95.190
P	CHAINMAN/RODMAN	2/22/2014	02/28/2015*	31.320	12.530	Q 10.000	R 3.380	0.720	0.160	8.0	58.110	S 73.770	T 73.770	89.430
#	**GLAZIER**	8/22/2014	06/30/2015*	A 41.830	9.700	U 12.140	-	0.500	V 0.380	8.0	64.550	W 85.470	106.380	106.380
# X	**MARBLE FINISHER**	8/22/2013	07/31/2014*	Y 28.050	9.690	3.870	I -	0.450	0.530	8.0	42.590	Z 56.610	70.640	70.640
# X	**MARBLE MASON**	8/22/2013	07/31/2014*	Y 39.300	9.690	11.990	I -	0.800	0.730	8.0	62.510	Z 82.160	101.810	101.810
#	**PAINTER:**													
	BRUSH AND SPRAY	2/22/2014	06/30/2014*	AA 34.830	9.700	Q 10.680	I -	0.410	0.380	D 8.0	56.000	73.420	AB 73.420	90.830
	INDUSTRIAL PAINTER	2/22/2014	06/30/2014*	AA 35.080	9.700	Q 10.680	I -	0.410	0.380	D 8.0	56.250	73.790	AB 73.790	91.330
	SANDBLASTER, STEAM CLEANER, WATERBLASTER	2/22/2014	06/30/2014*	AA 35.330	9.700	Q 10.680	I -	0.410	0.380	D 8.0	56.500	74.170	AB 74.170	91.830
	EXOTIC MATERIALS	2/22/2014	06/30/2014*	AA 35.580	9.700	Q 10.680	I -	0.410	0.380	D 8.0	56.750	74.540	AB 74.540	92.330
	PAPERHANGER/WALLCOVERING	2/22/2014	06/30/2014*	AA 35.830	9.700	Q 10.680	I -	0.410	0.380	D 8.0	57.000	74.920	AB 74.920	92.830
	TAPER	8/22/2014	06/30/2015*	AC 40.320	9.700	10.540	AD -	0.360	0.290	8.0	61.210	77.910	D 77.910	AB 94.620
AE	TAPER CLEAN-UP	8/22/2014	06/30/2015*	AF 16.100	9.700	-	-	-	-	8.0	25.800	33.360	D 33.360	AB 40.920
#	**PLASTERER**	8/22/2014	06/30/2015**	AG 37.480	12.530	10.630	F -	1.050	0.900	D 8.0	62.590	AH 78.760	AH 78.760	94.930
# AI	**PLASTER TENDER**	8/22/2014	06/30/2015**	AJ 32.400	9.080	12.420	F -	0.340	0.580	8.0	54.820	AK 68.470	AK 68.470	82.120
AI	GUN MAN	8/22/2014	06/30/2015**	AJ 33.150	9.080	12.420	F -	0.340	0.580	8.0	55.570	AK 69.600	AK 69.600	83.620
#	**PLUMBER:**													
	PLUMBER, PIPE FITTER & REFRIGERATION FITTER (HVAC)	8/22/2014	06/30/2015**	A 51.770	17.360	AL 14.530	-	1.750	1.700	8.0	87.110	E 112.990	E 112.990	138.880
	SERVICE TECHNICIAN	8/22/2014	06/30/2015**	A 50.880	17.360	AL 14.530	-	1.750	1.700	8.0	86.220	111.660	AM 111.660	111.660
	STEAMFITTER	8/22/2014	06/30/2015*	A 54.710	AL 16.550	AN 12.840	-	3.700	0.300	8.0	91.100	E 120.210	E 120.210	149.320

DocuSign Envelope ID: 894511EA-295B-49EB-A393-D26A6837FDD4

GENERAL PREVAILING WAGE DETERMINATION MADE BY THE DIRECTOR OF INDUSTRIAL RELATIONS
PURSUANT TO CALIFORNIA LABOR CODE PART 7, CHAPTER 1, ARTICLE 2, SECTIONS 1770, 1773 AND 1773.1
FOR COMMERCIAL BUILDING, HIGHWAY, HEAVY CONSTRUCTION AND DREDGING PROJECTS

LOCALITY: CONTRA COSTA COUNTY
DETERMINATION: CON-2014-2

				EMPLOYER PAYMENTS						STRAIGHT-TIME		OVERTIME HOURLY RATE		
	CRAFT (JOURNEY LEVEL)	ISSUE DATE	EXPIRATION DATE	BASIC HOURLY RATE	HEALTH AND WELFARE	PENSION	VACATION/ HOLIDAY	TRAINING	OTHER PAYMENTS	HOURS	TOTAL HOURLY RATE	DAILY	SATURDAY	SUNDAY AND HOLIDAY
	UNDERGROUND UTILITY PIPEFITTER	8/22/2014	06/30/2015**	26.550	5.800	AL 3.000	2.000	0.450	0.600	D 8.0	38.400	51.670	51.670	64.950
	LANDSCAPE PIPEFITTER	8/22/2014	06/30/2015**	26.550	5.800	AL 3.000	2.000	0.450	0.600	D 8.0	38.400	51.670	51.670	64.950
AO	UNDERGROUND UTILITY ASSISTANT JOURNEYMAN	8/22/2014	06/30/2015**	15.550	5.800	AL 3.000	2.000	0.450	0.600	D 8.0	27.400	35.170	35.170	42.950
AO	LANDSCAPE ASSISTANT JOURNEYMAN	8/22/2014	06/30/2015**	15.550	5.800	AL 3.000	2.000	0.450	0.600	D 8.0	27.400	35.170	35.170	42.950
AP	UNDERGROUND UTILITY TRADESMAN	8/22/2014	06/30/2015**	10.850	5.800	AL 3.000	2.000	0.450	0.600	D 8.0	22.700	28.130	28.130	33.550
AQ	LANDSCAPE TRADESMAN I	8/22/2014	06/30/2015**	10.500	5.800	AL -	2.000	0.450	0.600	D 8.0	19.350	24.600	24.600	29.850
AQ	LANDSCAPE TRADESMAN II	8/22/2014	06/30/2015**	10.850	5.800	AL 3.000	2.000	0.450	0.600	D 8.0	22.700	28.130	28.130	33.550
	SPRINKLER FITTER (FIRE PROTECTION AND FIRE CONTROL SYSTEMS)	2/22/2014	07/31/2014*	A 52.420	8.770	15.500	F -	1.100	0.400	8.0	78.190	104.400	104.400	130.610
#	**ROOFER**	8/22/2014	07/31/2015*	31.550	8.140	5.230	3.510	0.550	0.440	D 8.0	49.420	J 65.190	J 65.190	80.970
	BITUMASTIC, ENAMELER, PIPE WRAPPER, COAL TAR PITCH BUILD-UP	8/22/2014	07/31/2015*	33.550	8.140	5.230	3.510	0.550	0.440	D 8.0	51.420	J 68.190	J 68.190	84.970
	MASTIC WORKER, KETTLEMAN	8/22/2014	07/31/2015*	31.800	8.140	5.230	3.510	0.550	0.440	D 8.0	49.670	J 65.570	J 65.570	81.470
#	**SHEET METAL WORKER**	8/22/2014	06/30/2015*	AA 54.850	AR 13.110	AL 21.120	F -	1.410	1.150	8.0	91.640	O 119.060	O 119.060	146.490
	TOTAL SHEET METAL CONTRACT OF $200,000 OR LESS	8/22/2014	06/30/2015*	AA 48.790	AR 13.110	AL 20.500	F -	1.410	1.150	8.0	84.960	O 109.350	O 109.350	133.750
	SERVICE MECHANIC (TOTAL SHEET METAL CONTRACT OF $200,000 OR LESS)	8/22/2014	06/30/2015*	AA 35.840	AS 12.590	AL 13.060	F -	1.310	1.150	8.0	63.950	AT 81.870	AT 81.870	99.790
	SERVICE TECHNICIAN (TOTAL SHEET METAL CONTRACT OF $200,000 OR LESS)	8/22/2014	06/30/2015*	AA 31.550	AS 12.590	AL 8.930	F -	1.310	1.150	8.0	55.530	AT 71.300	AT 71.300	87.080
	AIR CONDITIONING SPECIALIST (TOTAL SHEET METAL CONTRACT OF $200,000 OR LESS)	8/22/2014	06/30/2015*	AA 28.320	AS 12.590	AL 3.770	F -	1.290	1.150	8.0	47.120	O 61.280	O 61.280	75.440
	AIR CONDITIONING JOURNEYMAN (TOTAL SHEET METAL CONTRACT OF $200,000 OR LESS)	8/22/2014	06/30/2015*	AA 33.130	AR 12.610	AL 8.770	F -	1.290	1.150	8.0	56.950	O 73.510	O 73.510	90.080
	METAL DECK & SIDING	8/22/2014	12/31/2014*	AA 33.860	AL 13.530	18.000	F -	AU 0.300	-	8.0	65.690	O 82.620	O 82.620	99.550
# AV	**TERRAZZO FINISHER**	8/22/2014	06/30/2015**	AC 33.190	9.690	5.120	F -	0.800	0.490	8.0	49.290	O 63.780	O 63.780	78.280
# AV	**TERRAZZO WORKER**	8/22/2014	06/30/2015**	AC 40.420	9.690	14.420	F -	0.800	0.670	8.0	66.000	O 83.540	O 83.540	101.080
#	**TILE FINISHER**	8/22/2014	03/31/2015**	AW 22.060	8.530	3.440	0.700	0.400	1.090	8.0	36.220	47.250	D 47.250	58.280
	RED CIRCLED FINISHER	8/22/2014	03/31/2015**	AW 27.750	8.530	3.670	1.300	0.300	1.100	8.0	42.650	56.530	D 56.530	70.400
#	**TILE SETTER**	8/22/2014	03/31/2015**	AW 38.240	8.530	4.670	2.350	0.590	1.680	8.0	56.060	75.180	D 75.180	94.300
	WATER WELL DRILLER													
	DRILLER, PUMP REPAIRMAN	8/22/2007	01/31/2008*	20.170	8.120	3.690	AX 0.800	-	-	8.0	32.780	AY 42.870	AY 42.870	AY 42.870
	PUMP INSTALLER	8/22/2007	01/31/2008*	17.860	8.120	3.690	AZ 0.720	-	-	8.0	30.390	AY 39.320	AY 39.320	AY 39.320
	HELPER	8/22/2007	01/31/2008*	12.470	8.120	3.690	BA 0.530	-	-	8.0	24.810	AY 31.040	AY 31.040	AY 31.040

FOOTNOTES

DocuSign Envelope ID: 894511EA-295B-49EB-A393-D26A6837FDD4

GENERAL PREVAILING WAGE DETERMINATION MADE BY THE DIRECTOR OF INDUSTRIAL RELATIONS

PURSUANT TO CALIFORNIA LABOR CODE PART 7, CHAPTER 1, ARTICLE 2, SECTIONS 1770, 1773 AND 1773.1

LOCALITY: CONTRA COSTA COUNTY

DETERMINATION: CON-2014-2

*	EFFECTIVE UNTIL SUPERSEDED BY A NEW DETERMINATION ISSUED BY THE DIRECTOR OF INDUSTRIAL RELATIONS. CONTACT THE OFFICE OF THE DIRECTOR – RESEARCH UNIT AT (415) 703-4774 FOR THE NEW RATES AFTER TEN DAYS AFTER THE EXPIRATION DATE IF NO SUBSEQUENT DETERMINATION IS ISSUED.
**	THE RATE TO BE PAID FOR WORK PERFORMED AFTER THIS DATE HAS BEEN DETERMINED. IF WORK WILL EXTEND PAST THIS DATE, THE NEW RATE MUST BE PAID AND SHOULD BE INCORPORATED IN CONTRACTS ENTERED INTO NOW. CONTACT THE OFFICE OF THE DIRECTOR – RESEARCH UNIT FOR SPECIFIC RATES AT (415) 703-4774.
#	INDICATES AN APPRENTICEABLE CRAFT. THE CURRENT APPRENTICE WAGE RATES ARE AVAILABLE ON THE INTERNET @ HTTP://WWW.DIR.CA.GOV/OPRL/PWAPPWAGE/PWAPPWAGESTART.ASP. TO OBTAIN ANY APPRENTICE WAGE RATES AS OF JULY 1, 2008 AND PRIOR TO SEPTEMBER 27, 2012, PLEASE CONTACT THE DIVISION OF APPRENTICESHIP STANDARDS OR REFER TO THE DIVISION OF APPRENTICESHIP STANDARDS' WEBSITE AT HTTP://WWW.DIR.CA.GOV/DAS/DAS.HTML.
&	THE BASIC HOURLY RATE AND EMPLOYER PAYMENTS ARE NOT TAKEN FROM A COLLECTIVE BARGAINING AGREEMENT FOR THIS CRAFT OR CLASSIFICATION.
A	INCLUDES AMOUNT WITHHELD FOR DUES CHECK OFF.
B	AMOUNT INCLUDED IN FACTORING OVERTIME RATES.
C	INCLUDES AMOUNT FOR INDUSTRY PROMOTION FUND, INTERNATIONAL MASONRY INSTITUTE (IMI), AND LABOR MANAGEMENT COOPERATION COMMITTEE (LMCC)
D	SATURDAYS IN THE SAME WORK WEEK MAY BE WORKED AT STRAIGHT-TIME IF JOB IS SHUT DOWN DURING THE NORMAL WORKWEEK DUE TO INCLEMENT WEATHER.
E	RATE APPLIES TO THE FIRST 2 DAILY OVERTIME HOURS AND THE FIRST 10 HOURS ON SATURDAY; ALL OTHER TIME IS PAID AT THE SUNDAY AND HOLIDAY OVERTIME HOURLY RATE.
F	INCLUDED IN STRAIGHT-TIME HOURLY RATE.
G	RATE APPLIES TO THE FIRST 10 HOURS WORKED ON SATURDAY. ALL OTHER HOURS ARE PAID AT THE SUNDAY/HOLIDAY RATE.
H	RATE APPLIES TO THE FIRST 2 DAILY OVERTIME HOURS AND THE FIRST 8 HOURS ON SATURDAY ONLY. ALL OTHER TIME IS PAID AT THE SUNDAY AND HOLIDAY OVERTIME HOURLY RATE. SATURDAYS IN THE SAME WORK WEEK MAY BE WORKED AT STRAIGHT-TIME IF JOB IS SHUT DOWN DURING THE NORMAL WORKWEEK DUE TO INCLEMENT WEATHER.
I	INCLUDED IN BASIC HOURLY RATE.
J	RATE APPLIES TO THE FIRST 4 DAILY OVERTIME HOURS AND THE FIRST 12 HOURS WORKED ON SATURDAY; ALL OTHER TIME IS PAID AT THE SUNDAY AND HOLIDAY OVERTIME HOURLY RATE.
K	IN ADDITION, AN AMOUNT EQUAL TO 3% OF THE BASIC HOURLY RATE IS ADDED TO THE TOTAL HOURLY RATE AND OVERTIME HOURLY RATES FOR THE NATIONAL EMPLOYEES BENEFIT BOARD.
L	IN ADDITION, AN AMOUNT EQUAL TO 0.5% OF THE BASIC HOURLY RATE, WHICH IS FACTORED AT THE APPLICABLE OVERTIME MULTIPLIER, IS ADDED TO THE TOTAL HOURLY RATE AND OVERTIME HOURLY RATES.
M	RATE APPLIES TO THE FIRST 4 DAILY OVERTIME HOURS AND THE FIRST 8 HOURS WORKED ON SATURDAY. ALL OTHER TIME IS PAID AT THE SUNDAY AND HOLIDAY OVERTIME RATE.
N	AMOUNT IS FOR INDUSTRY FUND.
O	RATE APPLIES TO THE FIRST 2 DAILY OVERTIME HOURS AND THE FIRST 8 HOURS ON SATURDAY ONLY; ALL OTHER TIME IS PAID AT THE SUNDAY AND HOLIDAY OVERTIME HOURLY RATE.
P	ALL CREWS, WITHOUT CONSIDERATION TO THE NUMBER OF INDIVIDUALS IN THE CREW, SHALL INCLUDE A CHIEF OF PARTY. A CREW CONSISTS OF ONE (1) OR MORE EMPLOYEES PERFORMING FIELD AND CONSTRUCTION SURVEY WORK.
Q	INCLUDES AN AMOUNT PER HOUR WORKED FOR ANNUITY TRUST FUND.
R	INCLUDES AN AMOUNT PER HOUR WORKED FOR SUPPLEMENTAL DUES.
S	RATE APPLIES TO THE FIRST 4 DAILY OVERTIME HOURS, MONDAY THROUGH FRIDAY. ALL OTHER OVERTIME IS PAID AT THE SUNDAY/HOLIDAY RATE.
T	RATE APPLIES TO THE FIRST 12 OVERTIME HOURS WORKED. ALL OTHER OVERTIME IS PAID AT THE SUNDAY/HOLIDAY RATE. IN THE EVENT IT IS NOT REASONABLY POSSIBLE TO COMPLETE 40 HOURS OF WORK ON AN 8 HOUR DAY, MONDAY THROUGH FRIDAY, THEN THE BALANCE OF THE 40 HOURS, UP TO 8 HOURS, MAY BE WORKED ON SATURDAY AT THE STRAIGHT-TIME RATE.
U	INCLUDES AN AMOUNT PER HOUR WORKED FOR IUPAT, IARP, AND RETIREE PENSION.
V	INCLUDES AMOUNTS FOR INDUSTRY FUND, WORK PRESERVATION FUND, AND LABOR MANAGEMENT COOPERATION INITIATIVE
W	RATE APPLIES TO THE FIRST 2 DAILY OVERTIME HOURS AND FIRST 8 HOURS WORKED ON DESIGNATED DAYS OFF; ALL OTHER TIME IS PAID AT THE SATURDAY, SUNDAY AND HOLIDAY OVERTIME RATE.
X	EMPLOYEES WORKING ON ANY SUSPENDED PLATFORM/SCAFFOLD SHALL BE PAID AN ADDITIONAL $15.00 PER DAY ABOVE THE WAGE RATE.
Y	INCLUDES AN AMOUNT FOR DUES CHECK-OFF AND VACATION/HOLIDAY WHICH ARE FACTORED INTO OVERTIME RATES.
Z	RATE APPLIES TO FIRST 2 OVERTIME HOURS MONDAY THROUGH FRIDAY; ALL OTHER OVERTIME IS PAID AT THE DOUBLE TIME RATE.
AA	INCLUDES AMOUNT FOR VAC/HOL AND DUES CHECK OFF.
AB	DESIGNATED DAYS OFF SHALL BE PAID AT THE SATURDAY OVERTIME RATE; PLEASE REFER TO THE HOLIDAY PROVISIONS FOR A LIST OF DESIGNATED DAYS OFF.
AC	INCLUDES AN AMOUNT FOR VACATION/DUES CHECK OFF WHICH IS NOT FACTORED IN THE OVERTIME RATES.
AD	INCLUDED IN STRAIGHT-TIME HOURLY RATE WHICH IS NOT FACTORED IN THE OVERTIME RATES.
AE	PLEASE NOTE THAT THE TAPER CLEAN-UP APPLIES ONLY TO THE TAPER CLASSIFICATION.
AF	INCLUDES AN AMOUNT WITHHELD FOR DUES CHECK OFF WHICH IS NOT FACTORED IN OVERTIME AND HOLIDAY WAGE RATES.
AG	INCLUDE AMOUNTS WITHHELD FOR DUES CHECK OFF AND VACATION WHICH IS NOT FACTORED INTO OVERTIME. EMPLOYEES OPERATING AND WORKING BEHIND PLASTER GUNS SHALL RECEIVE AN ADDITIONAL $5.00 PER DAY ABOVE THE WAGE RATE. EMPLOYEES WORKING ON AN EXTERIOR SUSPENDED SCAFFOLD SHALL BE PAID AN ADDITIONAL $10.00 PER DAY ABOVE THE WAGE RATE.
AH	RATE APPLIES TO THE FIRST 4 OVERTIME HOURS MONDAY THROUGH FRIDAY AND THE FIRST 8 HOURS WORKED ON SATURDAYS AND DESIGNATED DAYS OFF. ALL OTHER TIME IS PAID AT THE SUNDAY AND HOLIDAY OVERTIME RATE.
AI	ALL HOD CARRIERS WORKING ON THE HOSE SHALL RECEIVE $5.00 PER DAY OVER SCALE.
AJ	INCLUDES AN AMOUNT FOR VACATION, DUES CHECK-OFF AND ORGANIZING DUES WHICH ARE NOT FACTORED INTO OVERTIME.
AK	RATE APPLIES TO THE FIRST 4 OVERTIME HOURS MONDAY THROUGH FRIDAY AND THE FIRST 8 HOURS WORKED ON SATURDAY. ALL OTHER TIME IS PAID AT THE SUNDAY AND HOLIDAY OVERTIME RATE.
AL	PURSUANT TO LABOR CODE SECTIONS 1773.1 AND 1773.8, THE AMOUNT PAID FOR THIS EMPLOYER PAYMENT MAY VARY RESULTING IN A LOWER TAXABLE BASIC HOURLY WAGE RATE, BUT THE TOTAL HOURLY RATES FOR STRAIGHT TIME AND OVERTIME MAY NOT BE LESS THAN THE GENERAL PREVAILING RATE OF PER DIEM WAGES.

DocuSign Envelope ID: 894511EA-295B-49EB-A393-D26A6837FDD4

AM SATURDAY MAY BE PAID AT STRAIGHT TIME IF THE WORK WEEK IS TUESDAY THROUGH SATURDAY.

AN IN ADDITION, AN AMOUNT OF $3.00 FOR 401A SUPPLEMENTAL PENSION, WHICH IS FACTORED AT THE APPLICABLE OVERTIME MULTIPLIER, IS ADDED TO THE TOTAL HOURLY RATE AND OVERTIME HOURLY RATE. PURSUANT TO LABOR CODE SECTIONS 1773.1 AND 1773.8, THE AMOUNT PAID FOR THIS EMPLOYER PAYMENT MAY VARY RESULTING IN A LOWER TAXABLE BASIC HOURLY WAGE RATE, BUT THE TOTAL HOURLY RATES FOR STRAIGHT TIME AND OVERTIME MAY NOT BE LESS THAN THE GENERAL PREVAILING RATE OF PER DIEM WAGES.

AO THERE MUST BE AT LEAST ONE JOURNEYMAN PIPEFITTER PER CONTRACTOR ON EACH JOBSITE.

AP THERE SHALL BE NO MORE THAN THREE TRADESMEN TO EVERY TWO JOURNEYMAN PIPEFITTER/ASSISTANT JOURNEYMAN PIPEFITTER COMBINATION EMPLOYED PER CONTRACTOR ON EACH JOBSITE.

AQ THERE SHALL BE NO MORE THAN FOUR TRADESMEN TO EVERY TWO JOURNEYMAN PIPEFITTER/ASSISTANT JOURNEYMAN PIPEFITTER COMBINATION EMPLOYED PER CONTRACTOR ON EACH JOBSITE. MAINTENANCE WORK, BOTH DURING AND AFTER THE PLANT ESTABLISHMENT PERIOD, MAY BE PERFORMED BY LANDSCAPE TRADESMEN WITHOUT THE SUPERVISION OF A JOURNEYMAN PIPEFITTER.

AR INCLUDES SMOHIT AND SHC. EFFECTIVE 1/1/2013, PURSUANT TO LABOR CODE SECTIONS 1773.1 AND 1773.8, THE AMOUNT PAID FOR THIS EMPLOYER PAYMENT MAY VARY RESULTING IN A LOWER TAXABLE BASIC HOURLY WAGE RATE, BUT THE TOTAL HOURLY RATES FOR STRAIGHT TIME AND OVERTIME MAY NOT BE LESS THAN THE GENERAL PREVAILING RATE OF PER DIEM WAGES.

AS INCLUDES SHC. EFFECTIVE 1/1/2013, PURSUANT TO LABOR CODE SECTIONS 1773.1 AND 1773.8, THE AMOUNT PAID FOR THIS EMPLOYER PAYMENT MAY VARY RESULTING IN A LOWER TAXABLE BASIC HOURLY WAGE RATE, BUT THE TOTAL HOURLY RATES FOR STRAIGHT TIME AND OVERTIME MAY NOT BE LESS THAN THE GENERAL PREVAILING RATE OF PER DIEM WAGES.

AT RATE APPLIES TO FIRST 4 DAILY OVERTIME HOURS AND THE FIRST 8 HOURS WORKED ON SATURDAY DURING THE EMPLOYEES NORMAL WORKING HOURS. ALL OTHER OVERTIME HOURS SHALL BE PAID AT THE SUNDAY AND HOLIDAY DOUBLE TIME RATE.

AU INCLUDES $0.03 FOR SCHOLAR FUND.

AV THE RATIO OF TERRAZZO FINISHER HOURS TO TERRAZZO WORKER HOURS SHALL NOT EXCEED TWO (2) TO ONE (1).

AW INCLUDES AMOUNT WITHHELD FOR DUES CHECK OFF, WHICH IS FACTORED IN THE OVERTIME RATES. ANY EMPLOYEE WORKING UNDERGROUND SHALL RECEIVE $1.00 PER HOUR IN ADDITION TO REGULAR WAGES.

AX RATE APPLIES TO FIRST TWO YEARS OF EMPLOYMENT ONLY; $1.35 AFTER 2 YEARS; $1.45 AFTER 5 YEARS; $1.60 AFTER 10 YEARS

AY COMPUTATION IS BASED ON THE LOWEST VACATION AMOUNT. THESE RATES SHOULD BE INCREASED BY ANY ADDITIONAL VACATION/HOLIDAY PAY THAT IS REQUIRED.

AZ RATE APPLIES TO FIRST TWO YEARS OF EMPLOYMENT ONLY; $1.27 AFTER 2 YEARS; $1.37 AFTER 5 YEARS; $1.52 AFTER 10 YEARS.

BA RATE APPLIES TO FIRST TWO YEARS OF EMPLOYMENT ONLY; $1.08 AFTER 2 YEARS; $1.18 AFTER 5 YEARS; $1.33 AFTER 10 YEARS.

RECOGNIZED HOLIDAYS: HOLIDAYS UPON WHICH THE GENERAL PREVAILING HOURLY WAGE RATE FOR HOLIDAY WORK SHALL BE PAID, SHALL BE ALL HOLIDAYS IN THE COLLECTIVE BARGAINING AGREEMENT, APPLICABLE TO THE PARTICULAR CRAFT, CLASSIFICATION, OR TYPE OF WORKER EMPLOYED ON THE PROJECT, WHICH IS ON FILE WITH THE DIRECTOR OF INDUSTRIAL RELATIONS. IF THE PREVAILING RATE IS NOT BASED ON A COLLECTIVELY BARGAINED RATE, THE HOLIDAYS UPON WHICH THE PREVAILING RATE SHALL BE PAID SHALL BE AS PROVIDED IN SECTION 6700 OF THE GOVERNMENT CODE. YOU MAY OBTAIN THE HOLIDAY PROVISIONS FOR THE CURRENT DETERMINATIONS ON THE INTERNET AT HTTP://WWW.DIR.CA.GOV/OPRL/PWD. HOLIDAY PROVISIONS FOR CURRENT OR SUPERSEDED DETERMINATIONS MAY BE OBTAINED BY CONTACTING THE OFFICE OF THE DIRECTOR - RESEARCH UNIT AT (415) 703-4774.

TRAVEL AND/OR SUBSISTENCE PAYMENT: IN ACCORDANCE WITH LABOR CODE SECTIONS 1773.1 AND 1773.9, CONTRACTORS SHALL MAKE TRAVEL AND/OR SUBSISTENCE PAYMENTS TO EACH WORKER TO EXECUTE THE WORK. YOU MAY OBTAIN THE TRAVEL AND/OR SUBSISTENCE PROVISIONS FOR THE CURRENT DETERMINATIONS ON THE INTERNET @ HTTP://WWW.DIR.CA.GOV/OPRL/PWD. TRAVEL AND/OR SUBSISTENCE REQUIREMENTS FOR CURRENT OR SUPERSEDED DETERMINATIONS MAY BE OBTAINED FROM THE OFFICE OF THE DIRECTOR - RESEARCH UNIT AT (415) 703-4774.

CONTRA-2014-2-Determination

DocuSign Envelope ID: 894511EA-295B-49EB-A393-D26A6837FDD4

GENERAL PREVAILING WAGE DETERMINATION MADE BY THE DIRECTOR OF INDUSTRIAL RELATIONS

PURSUANT TO CALIFORNIA LABOR CODE PART 7, CHAPTER 1, ARTICLE 2, SECTIONS 1770, 1773 AND 1773.1

FOR COMMERCIAL BUILDING, HIGHWAY, HEAVY CONSTRUCTION AND DREDGING PROJECTS

LOCALITY: CONTRA COSTA COUNTY

DETERMINATION: CON-2014-2

				INCREASE 1			INCREASE 2			INCREASE 3			INCREASE 4			INCREASE 5			INCREASE 6			INCREASE 7	
	CRAFT (JOURNEY LEVEL)	ISSUE DATE	EXPIRATION DATE	DATE OF NEXT CHANGE	AMOUNT OF INCREASE		DATE OF NEXT CHANGE	AMOUNT OF INCREASE		DATE OF NEXT CHANGE	AMOUNT OF INCREASE		DATE OF NEXT CHANGE	AMOUNT OF INCREASE		DATE OF NEXT CHANGE	AMOUNT OF INCREASE		DATE OF NEXT CHANGE	AMOUNT OF INCREASE		DATE OF NEXT CHANGE	AMOUNT OF INCREASE	
	PLASTERER	8/22/2014	06/30/2015**	7/1/2015	$1.70	A	7/1/2016	$1.70	A															
B	**PLASTER TENDER**	8/22/2014	06/30/2015**	7/1/2015	$0.60	C																		
B	GUN MAN	8/22/2014	06/30/2015**	7/1/2015	$0.60	C																		
	PLUMBER:																							
	PLUMBER, PIPE FITTER & REFRIGERATION FITTER (HVAC)	8/22/2014	06/30/2015**	7/1/2015	$2.45	A																		
	SERVICE TECHNICIAN	8/22/2014	06/30/2015**	7/1/2015	$2.45	A																		
	UNDERGROUND UTILITY PIPEFITTER	8/22/2014	06/30/2015**	7/1/2015	$0.85	D	7/1/2016	$0.80	E															
	LANDSCAPE PIPEFITTER	8/22/2014	06/30/2015**	7/1/2015	$0.85	D	7/1/2016	$0.80	E															
F	UNDERGROUND UTILITY ASSISTANT JOURNEYMAN	8/22/2014	06/30/2015**	7/1/2015	$0.85	D	7/1/2016	$0.80	E															
F	LANDSCAPE ASSISTANT JOURNEYMAN	8/22/2014	06/30/2015**	7/1/2015	$0.85	D	7/1/2016	$0.80	E															
G	UNDERGROUND UTILITY TRADESMAN	8/22/2014	06/30/2015**	7/1/2015	$0.85	D	7/1/2016	$0.80	E															
H	LANDSCAPE TRADESMAN I	8/22/2014	06/30/2015**	7/1/2015	$0.85	D	7/1/2016	$0.80	E															
H	LANDSCAPE TRADESMAN II	8/22/2014	06/30/2015**	7/1/2015	$0.85	D	7/1/2016	$0.80	E															
I	**TERRAZZO FINISHER**	8/22/2014	06/30/2015**	7/1/2015	$0.75	A	7/1/2016	$1.00	A	7/1/2017	$1.00	A	7/1/2018	$1.25	A									
I	**TERRAZZO WORKER**	8/22/2014	06/30/2015**	7/1/2015	$1.25	A	7/1/2016	$1.50	A	7/1/2017	$1.75	A	7/1/2018	$2.00	A									
	TILE FINISHER	8/22/2014	03/31/2015**	4/1/2015	$1.14	A																		
	RED CIRCLED FINISHER	8/22/2014	03/31/2015**	4/1/2015	$1.14	A																		
	TILE SETTER	8/22/2014	03/31/2015**	4/1/2015	$1.75	A																		

FOOTNOTES

DocuSign Envelope ID: 894511EA-295B-49EB-A393-D26A6837FDD4

GENERAL PREVAILING WAGE DETERMINATION MADE BY THE DIRECTOR OF INDUSTRIAL RELATIONS

PURSUANT TO CALIFORNIA LABOR CODE PART 7, CHAPTER 1, ARTICLE 2, SECTIONS 1770, 1773 AND 1773.1

LOCALITY: CONTRA COSTA COUNTY

DETERMINATION: CON-2014-2

A THE PREDETERMINED INCREASE SHOWN IS TO BE ALLOCATED TO WAGES AND/OR EMPLOYER PAYMENTS. PLEASE CONTACT THE OFFICE OF THE DIRECTOR - RESEARCH UNIT AT (415) 703-4774 WHEN THE PREDETERMINED INCREASE BECOMES DUE TO CONFIRM THE DISTRIBUTION. PLEASE ALSO EXAMINE THE IMPORTANT NOTICES TO SEE IF ANY MODIFICATIONS HAVE BEEN ISSUED, AS THERE MAY BE REDUCTIONS TO PREDETERMINED INCREASES.

B ALL HOD CARRIERS WORKING ON THE HOSE SHALL RECEIVE $5.00 PER DAY OVER SCALE.

C $0.25 TO HEALTH AND WELFARE AND $0.35 TO PENSION.

D $0.05 TO THE BASIC HOURLY RATE AND $0.80 TO HEALTH AND WELFARE

E $0.10 TO THE BASIC HOURLY RATE, $0.60 TO HEALTH AND WELFARE, AND $0.10 TO VACATION

F THERE MUST BE AT LEAST ONE JOURNEYMAN PIPEFITTER PER CONTRACTOR ON EACH JOBSITE.

G THERE SHALL BE NO MORE THAN THREE TRADESMEN TO EVERY TWO JOURNEYMAN PIPEFITTER/ASSISTANT JOURNEYMAN PIPEFITTER COMBINATION EMPLOYED PER CONTRACTOR ON EACH JOBSITE.

H THERE SHALL BE NO MORE THAN FOUR TRADESMEN TO EVERY TWO JOURNEYMAN PIPEFITTER/ASSISTANT JOURNEYMAN PIPEFITTER COMBINATION EMPLOYED PER CONTRACTOR ON EACH JOBSITE. MAINTENANCE WORK, BOTH DURING AND AFTER THE PLANT ESTABLISHMENT PERIOD, MAY BE PERFORMED BY LANDSCAPE TRADESMEN WITHOUT THE SUPERVISION OF A JOURNEYMAN PIPEFITTER.

I THE RATIO OF TERRAZZO FINISHER HOURS TO TERRAZZO WORKER HOURS SHALL NOT EXCEED TWO (2) TO ONE (1).

CONTRA-2014-2-INC

DocuSign Envelope ID: 894511EA-295B-49EB-A393-D26A6837FDD4

GENERAL PREVAILING WAGE DETERMINATION MADE BY THE DIRECTOR OF INDUSTRIAL RELATIONS
PURSUANT TO CALIFORNIA LABOR CODE PART 7, CHAPTER 1, ARTICLE 2, SECTIONS 1770, 1773 AND 1773.1
FOR COMMERCIAL BUILDING, HIGHWAY, HEAVY CONSTRUCTION AND DREDGING PROJECTS

LOCALITY: SAN FRANCISCO COUNTY
DETERMINATION: SFR-2014-2

					EMPLOYER PAYMENTS						STRAIGHT-TIME		OVERTIME HOURLY RATE		
	CRAFT (JOURNEY LEVEL)	ISSUE DATE	EXPIRATION DATE	BASIC HOURLY RATE	HEALTH AND WELFARE	PENSION	VACATION/ HOLIDAY	TRAINING	OTHER PAYMENTS	HOURS	TOTAL HOURLY RATE	DAILY	SATURDAY	SUNDAY AND HOLIDAY
#	**BRICKLAYER, BLOCKLAYER:**													
	BRICKLAYER, BLOCKLAYER, STONEMASON	8/22/2013	04/30/2014*	A 36.560	9.690	13.300	B 3.400	0.800	C 1.250	D 8.0	65.000	E 84.980	E 84.980	104.960
	POINTER, CLEANER, CAULKER, WATERPROOFER	8/22/2014	06/30/2015*	A 42.470	9.690	10.520	F -	1.450	0.400	D 8.0	64.530	85.760	G 85.760	107.000
#	**BRICK TENDER**	8/22/2013	04/30/2014*	A 32.130	9.500	9.900	F -	0.340	-	8.0	51.870	H 67.930	H 67.930	84.000
#	**CARPET, LINOLEUM,**													
	SOFT FLOOR LAYER	8/22/2014	06/30/2015*	A 44.820	9.700	8.050	I -	0.530	0.340	8.0	63.440	J 85.850	J 85.850	108.260
	FLOOR COVERING HANDLER AFTER 3 YEARS	8/22/2014	06/30/2015*	A 22.390	9.700	4.030	I -	0.050	0.340	8.0	36.510	J 47.700	J 47.700	58.900
	FLOOR COVERING HANDLER LESS THAN 3 YEARS	8/22/2014	06/30/2015*	A 17.900	9.700	3.220	I -	0.050	0.340	8.0	31.210	J 40.160	J 40.160	49.110
	FLOOR COVERING HANDLER TRAINEE, FIRST 3 MONTHS	8/22/2014	06/30/2015*	A 14.310	9.700	2.580	I -	0.050	0.340	8.0	26.980	J 34.140	J 34.140	41.290
	FLOOR COVERING HANDLER TRAINEE, SECOND 3 MONTHS	8/22/2014	06/30/2015*	A 16.110	9.700	2.900	I -	0.050	0.340	8.0	29.100	J 37.160	J 37.160	45.210
#	**ELECTRICIAN:**													
	COMM & SYSTEM INSTALLER	2/22/2014	11/30/2014*	31.820	9.550	K 5.150	-	1.100	L 0.210	8.0	48.940	M 65.410	M 65.410	81.880
	COMM & SYSTEM TECH.	2/22/2014	11/30/2014*	36.230	9.550	K 5.150	-	1.100	L 0.210	8.0	53.510	M 72.260	M 72.260	91.000
	INSIDE WIREMAN	8/22/2014	05/31/2015**	58.820	13.230	N 12.770	F -	0.765	0.380	O 7.0	87.730	P 118.020	Q 148.310	148.310
	CABLE SPLICER	8/22/2014	05/31/2015**	66.170	13.230	N 12.770	F -	0.765	0.380	O 7.0	95.300	P 129.380	Q 163.460	163.460
#	**FIELD SURVEYOR:**													
R	CHIEF OF PARTY	2/22/2014	02/28/2015*	37.290	12.530	S 10.000	T 3.380	0.720	0.160	8.0	64.080	U 82.720	V 82.720	101.370
R	INSTRUMENTMAN	2/22/2014	02/28/2015*	34.200	12.530	S 10.000	T 3.380	0.720	0.160	8.0	60.990	U 78.090	V 78.090	95.190
R	CHAINMAN/RODMAN	2/22/2014	02/28/2015*	31.320	12.530	S 10.000	T 3.380	0.720	0.160	8.0	58.110	U 73.770	V 73.770	89.430
#	**GLAZIER**	8/22/2014	06/30/2015*	A 41.830	9.700	W 12.140	-	0.500	X 0.380	8.0	64.550	Y 85.470	106.380	106.380
# Z	**MARBLE FINISHER**	8/22/2013	07/31/2014*	AA 28.050	9.690	3.870	I -	0.450	0.530	8.0	42.590	AB 56.610	70.640	70.640
# Z	**MARBLE MASON**	8/22/2013	07/31/2014*	AA 39.300	9.690	11.990	I -	0.800	0.730	8.0	62.510	AB 82.160	101.810	101.810
#	**PAINTER:**													
	BRUSH AND SPRAY	2/22/2014	06/30/2014*	AC 38.450	9.700	S 10.680	I -	0.410	0.380	D 8.0	59.620	78.850	AD 78.850	98.070
	INDUSTRIAL PAINTER	2/22/2014	06/30/2014*	AC 38.700	9.700	S 10.680	I -	0.410	0.380	D 8.0	59.870	79.220	AD 79.220	98.570
	SANDBLASTER, STEAM CLEANER, WATERBLASTER	2/22/2014	06/30/2014*	AC 38.950	9.700	S 10.680	I -	0.410	0.380	D 8.0	60.120	79.600	AD 79.600	99.070
	EXOTIC MATERIALS	2/22/2014	06/30/2014*	AC 39.200	9.700	S 10.680	I -	0.410	0.380	D 8.0	60.370	79.970	AD 79.970	99.570
	PAPERHANGER/WALLCOVERING	2/22/2014	06/30/2014*	AC 39.450	9.700	S 10.680	I -	0.410	0.380	D 8.0	60.620	80.350	AD 80.350	100.070
	TAPER	8/22/2014	06/30/2015*	AE 40.320	9.700	10.540	AF -	0.360	0.290	8.0	61.210	77.910	D 77.910	AD 94.620
AG	TAPER CLEAN-UP	8/22/2014	06/30/2015*	AH 16.100	9.700	-	-	-	-	8.0	25.800	33.360	D 33.360	AD 40.920
#	**PLASTERER**	8/22/2014	06/30/2015**	AI 37.480	12.530	10.630	F -	1.050	0.900	D 8.0	62.590	AJ 78.760	AJ 78.760	94.930
# AK	**PLASTER TENDER**	8/22/2014	06/30/2015**	AL 32.030	8.970	12.300	F -	0.160	0.450	8.0	53.910	AM 67.930	AM 67.930	81.940
#	**PLUMBER:**													
	PLUMBER, STEAMFITTER, REFRIGERATION FITTER (HVAC)	8/22/2014	06/30/2015**	AN 64.000	16.660	20.480	F -	4.900	AO 2.400	7.0	108.440	AP 140.440	AQ 140.440	172.440
	PLUMBING SERVICE AND REPAIR	8/22/2014	06/30/2015**	AN 54.400	16.340	19.050	F -	4.070	AO 2.450	8.0	96.310	AR 123.510	G 123.510	150.710
	AIR CONDITIONING & REFRIGERATION/HVAC - SERVICE WORK	8/22/2014	06/30/2015**	AN 64.000	16.660	20.480	F -	4.900	AO 2.400	8.0	108.440	AR 140.440	G 140.440	172.440
	LANDSCAPE/IRRIGATION PIPEFITTER	8/22/2014	06/30/2015**	A 54.400	14.000	AS 15.300	F -	1.810	1.290	8.0	86.800	114.000	AT 114.000	141.200

DocuSign Envelope ID: 894511EA-295B-49EB-A393-D26A6837FDD4

GENERAL PREVAILING WAGE DETERMINATION MADE BY THE DIRECTOR OF INDUSTRIAL RELATIONS
PURSUANT TO CALIFORNIA LABOR CODE PART 7, CHAPTER 1, ARTICLE 2, SECTIONS 1770, 1773 AND 1773.1
FOR COMMERCIAL BUILDING, HIGHWAY, HEAVY CONSTRUCTION AND DREDGING PROJECTS

LOCALITY: SAN FRANCISCO COUNTY
DETERMINATION: SFR-2014-2

				EMPLOYER PAYMENTS						STRAIGHT-TIME		OVERTIME HOURLY RATE		
	CRAFT (JOURNEY LEVEL)	ISSUE DATE	EXPIRATION DATE	BASIC HOURLY RATE	HEALTH AND WELFARE	PENSION	VACATION/ HOLIDAY	TRAINING	OTHER PAYMENTS	HOURS	TOTAL HOURLY RATE	DAILY	SATURDAY	SUNDAY AND HOLIDAY
	UNDERGROUND/UTILITY PIPEFITTER	8/22/2014	06/30/2015**	A 54.400	14.000	AS 15.300	F -	1.810	1.290	8.0	86.800	114.000	AT 114.000	141.200
	SPRINKLER FITTER (FIRE PROTECTION AND FIRE CONTROL SYSTEMS)	2/22/2014	07/31/2014*	A 52.420	8.770	15.500	F -	1.100	0.400	8.0	78.190	104.400	104.400	130.610
#	**ROOFER**	8/22/2014	07/31/2015*	31.660	7.800	5.430	3.530	0.550	AU 0.450	8.0	49.420	AV 65.250	AV 65.250	81.080
	BITUMASTIC, ENAMELER, PIPE WRAPPER, COAL TAR PITCH BUILD-UP MASTIC WORKER, KETTLEMAN (2 KETTLES WITHOUT PUMPS)	8/22/2014	07/31/2015*	33.660	7.800	5.430	3.530	0.550	AU 0.450	8.0	51.420	AV 68.250	AV 68.250	85.080
		8/22/2014	07/31/2015*	31.910	7.800	5.430	3.530	0.550	AU 0.450	8.0	49.670	AV 65.630	AV 65.630	81.580
#	**SHEET METAL WORKER**	8/22/2014	06/30/2015*	AC 54.850	AW 13.110	AS 21.120	F -	1.410	1.150	7.0	91.640	AX 119.060	AX 119.060	146.490
	TOTAL SHEET METAL CONTRACT OF $200,000 OR LESS	8/22/2014	06/30/2015*	AC 48.790	AW 13.110	AS 20.500	F -	1.410	1.150	8.0	84.960	AY 109.350	AY 109.350	133.750
	SERVICE MECHANIC (TOTAL SHEET METAL CONTRACT OF $200,000 OR LESS)	8/22/2014	06/30/2015*	AC 35.840	AZ 12.590	AS 13.060	F -	1.310	1.150	8.0	63.950	BA 81.870	BA 81.870	99.790
	SERVICE TECHNICIAN (TOTAL SHEET METAL CONTRACT OF $200,000 OR LESS)	8/22/2014	06/30/2015*	AC 31.550	AZ 12.590	AS 8.930	F -	1.310	1.150	8.0	55.530	BA 71.300	BA 71.300	87.080
	AIR CONDITIONING SPECIALIST (TOTAL SHEET METAL CONTRACT OF $200,000 OR LESS)	8/22/2014	06/30/2015*	AC 28.320	AZ 12.590	AS 3.770	F -	1.290	1.150	8.0	47.120	AY 61.280	AY 61.280	75.440
	AIR CONDITIONING JOURNEYMAN (TOTAL SHEET METAL CONTRACT OF $200,000 OR LESS)	8/22/2014	06/30/2015*	AC 33.130	AW 12.610	AS 8.770	F -	1.290	1.150	8.0	56.950	AY 73.510	AY 73.510	90.080
	METAL DECK & SIDING	8/22/2014	12/31/2014*	AC 33.860	AS 13.530	18.000	F -	BB 0.300	-	8.0	65.690	AY 82.620	AY 82.620	99.550
# BC	**TERRAZZO FINISHER**	8/22/2014	06/30/2015**	AE 33.190	9.690	5.120	F -	0.800	0.490	8.0	49.290	AY 63.780	AY 63.780	78.280
# BC	**TERRAZZO WORKER**	8/22/2014	06/30/2015**	AE 40.420	9.690	14.420	F -	0.800	0.670	8.0	66.000	AY 83.540	AY 83.540	101.080
#	**TILE FINISHER**	8/22/2014	03/31/2015**	BD 22.060	8.530	3.440	0.700	0.400	1.090	8.0	36.220	47.250	D 47.250	58.280
	RED CIRCLED FINISHER	8/22/2014	03/31/2015**	BD 27.750	8.530	3.670	1.300	0.300	1.100	8.0	42.650	56.530	D 56.530	70.400
#	**TILE SETTER**	8/22/2014	03/31/2015**	BD 38.240	8.530	4.670	2.350	0.590	1.680	8.0	56.060	75.180	D 75.180	94.300
	WATER WELL DRILLER	8/22/1998	12/31/1998*	12.700	3.200	0.780	BE 0.630	-	-	8.0	17.310	BF 23.660	BF 23.660	BF 23.660
	PUMP INSTALLER	8/22/1998	12/31/1998*	12.700	3.200	0.780	BE 0.630	-	-	8.0	17.310	BF 23.660	BF 23.660	BF 23.660
	HELPER	8/22/1998	12/31/1998*	10.380	3.200	0.780	BG 0.520	-	-	8.0	14.880	BF 20.070	BF 20.070	BF 20.070

FOOTNOTES

DocuSign Envelope ID: 894511EA-295B-49EB-A393-D26A6837FDD4

GENERAL PREVAILING WAGE DETERMINATION MADE BY THE DIRECTOR OF INDUSTRIAL RELATIONS
PURSUANT TO CALIFORNIA LABOR CODE PART 7, CHAPTER 1, ARTICLE 2, SECTIONS 1770, 1773 AND 1773.1

LOCALITY: SAN FRANCISCO COUNTY

DETERMINATION: SFR-2014-2

*	EFFECTIVE UNTIL SUPERSEDED BY A NEW DETERMINATION ISSUED BY THE DIRECTOR OF INDUSTRIAL RELATIONS. CONTACT THE OFFICE OF THE DIRECTOR – RESEARCH UNIT AT (415) 703-4774 FOR NEW RATES AFTER TEN DAYS AFTER THE EXPIRATION DATE IF NO SUBSEQUENT DETERMINATION IS ISSUED.
**	THE RATE TO BE PAID FOR WORK PERFORMED AFTER THIS DATE HAS BEEN DETERMINED. IF WORK WILL EXTEND PAST THIS DATE, THE NEW RATE MUST BE PAID AND SHOULD BE INCORPORATED IN CONTRACTS ENTERED INTO NOW. CONTACT THE OFFICE OF THE DIRECTOR – RESEARCH UNIT FOR SPECIFIC RATES AT (415) 703-4774.
#	INDICATES AN APPRENTICEABLE CRAFT. THE CURRENT APPRENTICE WAGE RATES ARE AVAILABLE ON THE INTERNET @ HTTP://WWW.DIR.CA.GOV/OPRL/PWAPPWAGE/PWAPPWAGESTART.ASP. TO OBTAIN ANY APPRENTICE WAGE RATES AS OF JULY 1, 2008 AND PRIOR TO SEPTEMBER 27, 2012, PLEASE CONTACT THE DIVISION OF APPRENTICESHIP STANDARDS OR REFER TO THE DIVISION OF APPRENTICESHIP STANDARDS' WEBSITE AT HTTP://WWW.DIR.CA.GOV/DAS/DAS.HTML.
&	THE BASIC HOURLY RATE AND EMPLOYER PAYMENTS ARE NOT TAKEN FROM A COLLECTIVE BARGAINING AGREEMENT FOR THIS CRAFT OR CLASSIFICATION.
A	INCLUDES AMOUNT WITHHELD FOR DUES CHECK OFF.
B	AMOUNT INCLUDED IN FACTORING OVERTIME RATES.
C	INCLUDES AMOUNT FOR INDUSTRY PROMOTION FUND, INTERNATIONAL MASONRY INSTITUTE (IMI), AND LABOR MANAGEMENT COOPERATION COMMITTEE (LMCC)
D	SATURDAYS IN THE SAME WORK WEEK MAY BE WORKED AT STRAIGHT-TIME IF JOB IS SHUT DOWN DURING THE NORMAL WORKWEEK DUE TO INCLEMENT WEATHER.
E	RATE APPLIES TO THE FIRST 2 DAILY OVERTIME HOURS AND THE FIRST 10 HOURS ON SATURDAY; ALL OTHER TIME IS PAID AT THE SUNDAY AND HOLIDAY OVERTIME HOURLY RATE.
F	INCLUDED IN STRAIGHT-TIME HOURLY RATE.
G	RATE APPLIES TO THE FIRST 10 HOURS WORKED ON SATURDAY. ALL OTHER HOURS ARE PAID AT THE SUNDAY/HOLIDAY RATE.
H	RATE APPLIES TO THE FIRST 2 DAILY OVERTIME HOURS AND THE FIRST 8 HOURS ON SATURDAY ONLY. ALL OTHER TIME IS PAID AT THE SUNDAY AND HOLIDAY OVERTIME HOURLY RATE. SATURDAYS IN THE SAME WORK WEEK MAY BE WORKED AT STRAIGHT-TIME IF JOB IS SHUT DOWN DURING THE NORMAL WORKWEEK DUE TO INCLEMENT WEATHER.
I	INCLUDED IN BASIC HOURLY RATE.
J	RATE APPLIES TO THE FIRST 4 DAILY OVERTIME HOURS AND THE FIRST 12 HOURS WORKED ON SATURDAY; ALL OTHER TIME IS PAID AT THE SUNDAY AND HOLIDAY OVERTIME HOURLY RATE.
K	IN ADDITION, AN AMOUNT EQUAL TO 3% OF THE BASIC HOURLY RATE IS ADDED TO THE TOTAL HOURLY RATE AND OVERTIME HOURLY RATES FOR THE NATIONAL EMPLOYEES BENEFIT BOARD.
L	IN ADDITION, AN AMOUNT EQUAL TO 0.5% OF THE BASIC HOURLY RATE, WHICH IS FACTORED AT THE APPLICABLE OVERTIME MULTIPLIER, IS ADDED TO THE TOTAL HOURLY RATE AND OVERTIME HOURLY RATES.
M	RATE APPLIES TO THE FIRST 4 DAILY OVERTIME HOURS AND THE FIRST 8 HOURS WORKED ON SATURDAY. ALL OTHER TIME IS PAID AT THE SUNDAY AND HOLIDAY OVERTIME RATE.
N	IN ADDITION, AN AMOUNT EQUAL TO 3% OF THE BASIC HOURLY RATE IS ADDED TO THE TOTAL HOURLY RATE AND OVERTIME HOURLY RATES FOR THE NATIONAL EMPLOYEES BENEFIT BOARD. PURSUANT LABOR CODE SECTIONS 1773.1 AND 1773.8, THE AMOUNT PAID FOR THIS EMPLOYER PAYMENT MAY VARY RESULTING IN A LOWER TAXABLE BASIC HOURLY WAGE RATE, BUT THE TOTAL HOURLY RATES FOR STRAIGHT TIME AND OVERTIME MAY NOT BE LESS THAN THE GENERAL PREVAILING RATE OF PER DIEM WAGES.
O	8 HOURS OF WORK IF MULTIPLE SHIFT IS WORKED.
P	RATE APPLIES TO THE FIRST 2 OVERTIME HOURS; ALL OTHER TIME IS PAID AT THE SATURDAY OVERTIME HOURLY RATE.
Q	SEVEN HOURS ON SATURDAY MAY BE WORKED AT THE DAILY OVERTIME RATE PROVIDED NO OVERTIME HOUR IS WORKED DURING THE WEEK.
R	ALL CREWS, WITHOUT CONSIDERATION TO THE NUMBER OF INDIVIDUALS IN THE CREW, SHALL INCLUDE A CHIEF OF PARTY. A CREW CONSISTS OF ONE (1) OR MORE EMPLOYEES PERFORMING FIELD AND CONSTRUCTION SURVEY WORK.
S	INCLUDES AN AMOUNT PER HOUR WORKED FOR ANNUITY TRUST FUND.
T	INCLUDES AN AMOUNT PER HOUR WORKED FOR SUPPLEMENTAL DUES.
U	RATE APPLIES TO THE FIRST 4 DAILY OVERTIME HOURS, MONDAY THROUGH FRIDAY. ALL OTHER OVERTIME IS PAID AT THE SUNDAY/HOLIDAY RATE.
V	RATE APPLIES TO THE FIRST 12 OVERTIME HOURS WORKED. ALL OTHER OVERTIME IS PAID AT THE SUNDAY/HOLIDAY RATE. IN THE EVENT IT IS NOT REASONABLY POSSIBLE TO COMPLETE 40 HOURS OF WORK ON AN 8 HOUR DAY, MONDAY THROUGH FRIDAY, THEN THE BALANCE OF THE 40 HOURS, UP TO 8 HOURS, MAY BE WORKED ON SATURDAY AT THE STRAIGHT-TIME RATE.
W	INCLUDES AN AMOUNT PER HOUR WORKED FOR IUPAT, IARP, AND RETIREE PENSION.
X	INCLUDES AMOUNTS FOR INDUSTRY FUND, WORK PRESERVATION FUND, AND LABOR MANAGEMENT COOPERATION INITIATIVE
Y	RATE APPLIES TO THE FIRST 2 DAILY OVERTIME HOURS AND FIRST 8 HOURS WORKED ON DESIGNATED DAYS OFF; ALL OTHER TIME IS PAID AT THE SATURDAY, SUNDAY AND HOLIDAY OVERTIME RATE.
Z	EMPLOYEES WORKING ON ANY SUSPENDED PLATFORM/SCAFFOLD SHALL BE PAID AN ADDITIONAL $15.00 PER DAY ABOVE THE WAGE RATE.
AA	INCLUDES AN AMOUNT FOR DUES CHECK-OFF AND VACATION/HOLIDAY WHICH ARE FACTORED INTO OVERTIME RATES.
AB	RATE APPLIES TO FIRST 2 OVERTIME HOURS MONDAY THROUGH FRIDAY; ALL OTHER OVERTIME IS PAID AT THE DOUBLE TIME RATE.
AC	INCLUDES AMOUNT FOR VAC/HOL AND DUES CHECK OFF.
AD	DESIGNATED DAYS OFF SHALL BE PAID AT THE SATURDAY OVERTIME RATE; PLEASE REFER TO THE HOLIDAY PROVISIONS FOR A LIST OF DESIGNATED DAYS OFF.
AE	INCLUDES AN AMOUNT FOR VACATION/DUES CHECK OFF WHICH IS NOT FACTORED IN THE OVERTIME RATES.
AF	INCLUDED IN STRAIGHT-TIME HOURLY RATE WHICH IS NOT FACTORED IN THE OVERTIME RATES.

DocuSign Envelope ID: 894511EA-295B-49EB-A393-D26A6837FDD4

LOCALITY: SAN FRANCISCO COUNTY

DETERMINATION: SFR-2014-2

AG PLEASE NOTE THAT THE TAPER CLEAN-UP APPLIES ONLY TO THE TAPER CLASSIFICATION.

AH INCLUDES AN AMOUNT WITHHELD FOR DUES CHECK OFF WHICH IS NOT FACTORED IN OVERTIME AND HOLIDAY WAGE RATES.

AI INCLUDE AMOUNTS WITHHELD FOR DUES CHECK OFF AND VACATION WHICH IS NOT FACTORED INTO OVERTIME. EMPLOYEES OPERATING AND WORKING BEHIND PLASTER GUNS SHALL RECEIVE AN ADDITIO $5.00 PER DAY ABOVE THE WAGE RATE. EMPLOYEES WORKING ON AN EXTERIOR SUSPENDED SCAFFOLD SHALL BE PAID AN ADDITIONAL $10.00 PER DAY ABOVE THE WAGE RATE.

AJ RATE APPLIES TO THE FIRST 4 OVERTIME HOURS MONDAY THROUGH FRIDAY AND THE FIRST 8 HOURS WORKED ON SATURDAYS AND DESIGNATED DAYS OFF. ALL OTHER TIME IS PAID AT THE SUNDAY AND HOLIDAY OVERTIME RATE.

AK ALL HOD CARRIERS WORKING ON THE HOSE SHALL RECEIVE $5.00 PER DAY OVER SCALE.

AL INCLUDES AN AMOUNT FOR VACATION, DUES CHECK-OFF AND ORGANIZING DUES WHICH ARE NOT FACTORED INTO OVERTIME.

AM RATE APPLIES TO THE FIRST 4 OVERTIME HOURS MONDAY THROUGH FRIDAY AND THE FIRST 8 HOURS WORKED ON SATURDAY. ALL OTHER TIME IS PAID AT THE SUNDAY AND HOLIDAY OVERTIME RATE.

AN INCLUDES AN AMOUNT FOR VACATION/HOLIDAY.

AO INCLUDES FUNDS FOR SUB/JURY DUTY, CRAFT, CONTRACT ADMINISTRATION/HIRING HALL, JURISDICTIONAL PROTECTION AND SCHOLARSHIP.

AP RATE APPLIES TO THE FIRST 2 DAILY OVERTIME HOURS AND THE FIRST 9 HOURS ON SATURDAY ONLY. ALL OTHER TIME IS PAID AT THE SUNDAY AND HOLIDAY OVERTIME HOURLY RATE.

AQ THE FIRST 9 HOURS WORKED ON SATURDAY SHALL BE PAID AT TIME AND ONE-HALF.

AR RATE APPLIES TO THE FIRST 2 OVERTIME HOURS ONLY; ALL OTHER TIME IS PAID AT THE SUNDAY AND HOLIDAY OVERTIME HOURLY RATE.

AS PURSUANT TO LABOR CODE SECTIONS 1773.1 AND 1773.8, THE AMOUNT PAID FOR THIS EMPLOYER PAYMENT MAY VARY RESULTING IN A LOWER TAXABLE BASIC HOURLY WAGE RATE, BUT THE TOTAL HOURLY RATES FOR STRAIGHT TIME AND OVERTIME MAY NOT BE LESS THAN THE GENERAL PREVAILING RATE OF PER DIEM WAGES.

AT RATE APPLIES TO THE FIRST 8 HOURS WORKED; ALL OTHER TIME IS PAID AT THE SUNDAY AND HOLIDAY OVERTIME HOURLY RATE.

AU INCLUDES AMOUNTS FOR LABOR MANAGEMENT AND PROMOTION FUND

AV RATE APPLIES FOR THE FIRST 4 OVERTIME HOURS MONDAY THROUGH FRIDAY AND THE FIRST 12 HOURS WORKED ON SATURDAY. ALL OTHER TIME IS PAID AT THE SUNDAY/HOLIDAY RATE. SATURDAYS THE SAME WORKWEEK MAY BE WORKED AT STRAIGHT-TIME IF JOB IS SHUT DOWN DURING THE NORMAL WORKWEEK DUE TO INCLEMENT WEATHER.

AW INCLUDES SMOHIT AND SHC. EFFECTIVE 1/1/2013, PURSUANT TO LABOR CODE SECTIONS 1773.1 AND 1773.8, THE AMOUNT PAID FOR THIS EMPLOYER PAYMENT MAY VARY RESULTING IN A LOWER TAXABLE BASIC HOURLY WAGE RATE, BUT THE TOTAL HOURLY RATES FOR STRAIGHT TIME AND OVERTIME MAY NOT BE LESS THAN THE GENERAL PREVAILING RATE OF PER DIEM WAGES.

AX RATE APPLIES TO THE FIRST 2 DAILY OVERTIME HOURS AND THE FIRST 7 HOURS ON SATURDAY ONLY; ALL OTHER TIME IS PAID AT THE SUNDAY AND HOLIDAY OVERTIME HOURLY RATE.

AY RATE APPLIES TO THE FIRST 2 DAILY OVERTIME HOURS AND THE FIRST 8 HOURS ON SATURDAY ONLY; ALL OTHER TIME IS PAID AT THE SUNDAY AND HOLIDAY OVERTIME HOURLY RATE.

AZ INCLUDES SHC. EFFECTIVE 1/1/2013, PURSUANT TO LABOR CODE SECTIONS 1773.1 AND 1773.8, THE AMOUNT PAID FOR THIS EMPLOYER PAYMENT MAY VARY RESULTING IN A LOWER TAXABLE BASIC HOURLY WAGE RATE, BUT THE TOTAL HOURLY RATES FOR STRAIGHT TIME AND OVERTIME MAY NOT BE LESS THAN THE GENERAL PREVAILING RATE OF PER DIEM WAGES.

BA RATE APPLIES TO FIRST 4 DAILY OVERTIME HOURS AND THE FIRST 8 HOURS WORKED ON SATURDAY DURING THE EMPLOYEES NORMAL WORKING HOURS. ALL OTHER OVERTIME HOURS SHALL BE PAID AT THE SUNDAY AND HOLIDAY DOUBLE TIME RATE.

BB INCLUDES $0.03 FOR SCHOLAR FUND.

BC THE RATIO OF TERRAZZO FINISHER HOURS TO TERRAZZO WORKER HOURS SHALL NOT EXCEED TWO (2) TO ONE (1).

BD INCLUDES AMOUNT WITHHELD FOR DUES CHECK OFF, WHICH IS FACTORED IN THE OVERTIME RATES. ANY EMPLOYEE WORKING UNDERGROUND SHALL RECEIVE $1.00 PER HOUR IN ADDITION TO REGULAR WAGES.

BE RATE APPLIES TO FIRST YEAR OF EMPLOYMENT ONLY; $0.88 AFTER 2 YEARS OF EMPLOYMENT.

BF RATE APPLIES TO ALL TIME WORKED IN EXCESS OF 8 HOURS PER DAY OR 40 HOURS PER WEEK AND FOR ALL HOURS ON SUNDAYS AND HOLIDAYS. RATE DOES NOT INCLUDE ANY ADDITIONAL AMOUNT THAT MAY BE REQUIRED FOR VACATION/HOLIDAY PAYMENT.

BG RATE APPLIES TO FIRST YEAR OF EMPLOYMENT ONLY; $0.72 AFTER 2 YEARS OF EMPLOYMENT.

RECOGNIZED HOLIDAYS: HOLIDAYS UPON WHICH THE GENERAL PREVAILING HOURLY WAGE RATE FOR HOLIDAY WORK SHALL BE PAID, SHALL BE ALL HOLIDAYS IN THE COLLECTIVE BARGAINING AGREEMEN APPLICABLE TO THE PARTICULAR CRAFT, CLASSIFICATION, OR TYPE OF WORKER EMPLOYED ON THE PROJECT, WHICH IS ON FILE WITH THE DIRECTOR OF INDUSTRIAL RELATIONS. IF THE PREVAIL RATE IS NOT BASED ON A COLLECTIVELY BARGAINED RATE, THE HOLIDAYS UPON WHICH THE PREVAILING RATE SHALL BE PAID SHALL BE AS PROVIDED IN SECTION 6700 OF THE GOVERNMENT CODE. YOU MAY OBTAIN THE HOLIDAY PROVISIONS FOR THE CURRENT DETERMINATIONS ON THE INTERNET AT HTTP://WWW.DIR.CA.GOV/OPRL/PWD. HOLIDAY PROVISIONS FOR CURRENT OR SUPERSEDED DETERMINATIONS MAY BE OBTAINED BY CONTACTING THE OFFICE OF THE DIRECTOR - RESEARCH UNIT AT (415) 703-4774.

TRAVEL AND/OR SUBSISTENCE PAYMENT: IN ACCORDANCE WITH LABOR CODE SECTIONS 1773.1 AND 1773.9, CONTRACTORS SHALL MAKE TRAVEL AND/OR SUBSISTENCE PAYMENTS TO EACH WORKER TO EXECUTE THE WORK. YOU MAY OBTAIN THE TRAVEL AND/OR SUBSISTENCE PROVISIONS FOR THE CURRENT DETERMINATIONS ON THE INTERNET @ HTTP://WWW.DIR.CA.GOV/OPRL/PWD. TRAVEL AND/OR SUBSISTENCE REQUIREMENTS FOR CURRENT OR SUPERSEDED DETERMINATIONS MAY BE OBTAINED FROM THE OFFICE OF THE DIRECTOR - RESEARCH UNIT AT (415) 703-4774.

DocuSign Envelope ID: 894511EA-295B-49EB-A393-D26A6837FDD4

GENERAL PREVAILING WAGE DETERMINATION MADE BY THE DIRECTOR OF INDUSTRIAL RELATIONS

PURSUANT TO CALIFORNIA LABOR CODE PART 7, CHAPTER 1, ARTICLE 2, SECTIONS 1770, 1773 AND 1773.1

FOR COMMERCIAL BUILDING, HIGHWAY, HEAVY CONSTRUCTION AND DREDGING PROJECTS

LOCALITY: SAN FRANCISCO COUNTY

DETERMINATION: SFR-2014-2

				INCREASE 1		INCREASE 2		INCREASE 3		INCREASE 4		INCREASE 5		INCREASE 6		INCREASE 7	
	CRAFT (JOURNEY LEVEL)	ISSUE DATE	EXPIRATION DATE	DATE OF NEXT CHANGE	AMOUNT OF INCREASE	DATE OF NEXT CHANGE	AMOUNT OF INCREASE	DATE OF NEXT CHANGE	AMOUNT OF INCREASE	DATE OF NEXT CHANGE	AMOUNT OF INCREASE	DATE OF NEXT CHANGE	AMOUNT OF INCREASE	DATE OF NEXT CHANGE	AMOUNT OF INCREAS	DATE OF NEXT CHANGE	AMOUNT OF INCREASE
	ELECTRICIAN:																
	INSIDE WIREMAN	8/22/2014	05/31/2015**	6/1/2015	$3.25 A	6/1/2016	$3.25 A	6/1/2017	$3.75 A								
	CABLE SPLICER	8/22/2014	05/31/2015**	6/1/2015	$3.25 A	6/1/2016	$3.25 A	6/1/2017	$3.75 A								
	PLASTERER	8/22/2014	06/30/2015**	7/1/2015	$1.70 A	7/1/2016	$1.70 A										
B	**PLASTER TENDER**	8/22/2014	06/30/2015**	7/1/2015	$1.25 C												
	PLUMBER:																
	PLUMBER, STEAMFITTER, REFRIGERATION FITTER (HVAC)	8/22/2014	06/30/2015**	7/1/2015	$3.50 A	7/1/2016	$3.50 A										
	PLUMBING SERVICE AND REPAIR	8/22/2014	06/30/2015**	7/1/2015	$2.98 A	7/1/2016	$2.98 A										
	AIR CONDITIONING & REFRIGERATION/HVAC - SERVICE WORK	8/22/2014	06/30/2015**	7/1/2015	$3.50 A	7/1/2016	$3.50 A										
	LANDSCAPE/IRRIGATION PIPEFITTER	8/22/2014	06/30/2015**	7/1/2015	$2.98 A	7/1/2016	$2.98 A										
	UNDERGROUND/UTILITY PIPEFITTER	8/22/2014	06/30/2015**	7/1/2015	$2.98 A	7/1/2016	$2.98 A										
D	**TERRAZZO FINISHER**	8/22/2014	06/30/2015**	7/1/2015	$0.75 A	7/1/2016	$1.00 A	7/1/2017	$1.00 A	7/1/2018	$1.25 A						
D	**TERRAZZO WORKER**	8/22/2014	06/30/2015**	7/1/2015	$1.25 A	7/1/2016	$1.50 A	7/1/2017	$1.75 A	7/1/2018	$2.00 A						
	TILE FINISHER	8/22/2014	03/31/2015**	4/1/2015	$1.14 A												
	RED CIRCLED FINISHER	8/22/2014	03/31/2015**	4/1/2015	$1.14 A												
	TILE SETTER	8/22/2014	03/31/2015**	4/1/2015	$1.75 A												

FOOTNOTES

DocuSign Envelope ID: 894511EA-295B-49EB-A393-D26A6837FDD4

GENERAL PREVAILING WAGE DETERMINATION MADE BY THE DIRECTOR OF INDUSTRIAL RELATIONS

PURSUANT TO CALIFORNIA LABOR CODE PART 7, CHAPTER 1, ARTICLE 2, SECTIONS 1770, 1773 AND 1773.1

LOCALITY: SAN FRANCISCO COUNTY

DETERMINATION: SFR-2014-2

A THE PREDETERMINED INCREASE SHOWN IS TO BE ALLOCATED TO WAGES AND/OR EMPLOYER PAYMENTS. PLEASE CONTACT THE OFFICE OF THE DIRECTOR - RESEARCH UNIT AT (415) 703-4774 WHEN THE PREDETERMINED INCREASE BECOMES DUE TO CONFIRM THE DISTRIBUTION. PLEASE ALSO EXAMINE THE IMPORTANT NOTICES TO SEE IF ANY MODIFICATIONS HAVE BEEN ISSUED, AS THERE MAY BE REDUCTIONS TO PREDETERMINED INCREASES.

B ALL HOD CARRIERS WORKING ON THE HOSE SHALL RECEIVE $5.00 PER DAY OVER SCALE.

C $0.25 TO HEALTH & WELFARE AND $1.00 TO PENSION.

D THE RATIO OF TERRAZZO FINISHER HOURS TO TERRAZZO WORKER HOURS SHALL NOT EXCEED TWO (2) TO ONE (1).

SFR-2014-2-INC

DocuSign Envelope ID: 894511EA-295B-49EB-A393-D26A6837FDD4

GENERAL PREVAILING WAGE DETERMINATION MADE BY THE DIRECTOR OF INDUSTRIAL RELATIONS
PURSUANT TO CALIFORNIA LABOR CODE PART 7, CHAPTER 1, ARTICLE 2, SECTIONS 1770, 1773 AND 1773.1
FOR COMMERCIAL BUILDING, HIGHWAY, HEAVY CONSTRUCTION AND DREDGING PROJECTS

LOCALITY: SAN MATEO COUNTY
DETERMINATION: SMA-2014-2

					EMPLOYER PAYMENTS						STRAIGHT-TIME		OVERTIME HOURLY RATE		
	CRAFT (JOURNEY LEVEL)	ISSUE DATE	EXPIRATION DATE	BASIC HOURLY RATE	HEALTH AND WELFARE	PENSION	VACATION/ HOLIDAY	TRAINING	OTHER PAYMENTS	HOURS	TOTAL HOURLY RATE	DAILY	SATURDAY	SUNDAY AND HOLIDAY
#	**BRICKLAYER, BLOCKLAYER:**													
	BRICKLAYER, BLOCKLAYER, STONEMASON	8/22/2013	04/30/2014*	A 36.560	9.690	13.300	B 3.400	0.800	C 1.250	D 8.0	65.000	E 84.980	E 84.980	104.960
	POINTER, CLEANER, CAULKER, WATERPROOFER	8/22/2014	06/30/2015*	A 42.080	9.690	10.520	F -	1.440	0.400	D 8.0	64.130	85.170	G 85.170	106.210
#	**BRICK TENDER**	8/22/2013	04/30/2014*	A 32.130	9.500	9.900	F -	0.340	-	8.0	51.870	H 67.930	H 67.930	84.000
#	**CARPET, LINOLEUM,**													
	SOFT FLOOR LAYER	8/22/2014	06/30/2015*	A 44.820	9.700	8.050	I -	0.530	0.340	8.0	63.440	J 85.850	J 85.850	108.260
	FLOOR COVERING HANDLER AFTER 3 YEARS	8/22/2014	06/30/2015*	A 22.390	9.700	4.030	I -	0.050	0.340	8.0	36.510	J 47.700	J 47.700	58.900
	FLOOR COVERING HANDLER LESS THAN 3 YEARS	8/22/2014	06/30/2015*	A 17.900	9.700	3.220	I -	0.050	0.340	8.0	31.210	J 40.160	J 40.160	49.110
	FLOOR COVERING HANDLER TRAINEE, FIRST 3 MONTHS	8/22/2014	06/30/2015*	A 14.310	9.700	2.580	I -	0.050	0.340	8.0	26.980	J 34.140	J 34.140	41.290
	FLOOR COVERING HANDLER TRAINEE, SECOND 3 MONTHS	8/22/2014	06/30/2015*	A 16.110	9.700	2.900	I -	0.050	0.340	8.0	29.100	J 37.160	J 37.160	45.210
#	**ELECTRICIAN:**													
	COMM & SYSTEM INSTALLER	2/22/2014	11/30/2014*	31.320	9.550	K 4.650	-	1.100	L 0.210	8.0	47.930	M 64.140	M 64.140	80.350
	COMM & SYSTEM TECH.	2/22/2014	11/30/2014*	35.660	9.550	K 4.650	-	1.100	L 0.210	8.0	52.420	M 70.870	M 70.870	89.330
	INSIDE WIREMAN, TECHNICIAN	8/22/2014	05/31/2015**	A 52.500	15.730	N 10.500	F -	1.460	0.200	8.0	81.960	O 109.000	136.040	136.040
#	**FIELD SURVEYOR:**													
P	CHIEF OF PARTY	2/22/2014	02/28/2015*	37.290	12.530	Q 10.000	R 3.380	0.720	0.160	8.0	64.080	S 82.720	T 82.720	101.370
P	INSTRUMENTMAN	2/22/2014	02/28/2015*	34.200	12.530	Q 10.000	R 3.380	0.720	0.160	8.0	60.990	S 78.090	T 78.090	95.190
P	CHAINMAN/RODMAN	2/22/2014	02/28/2015*	31.320	12.530	Q 10.000	R 3.380	0.720	0.160	8.0	58.110	S 73.770	T 73.770	89.430
#	**GLAZIER**	8/22/2014	06/30/2015*	A 41.830	9.700	U 12.140	-	0.500	V 0.380	8.0	64.550	W 85.470	106.380	106.380
# X	**MARBLE FINISHER**	8/22/2013	07/31/2014*	Y 28.050	9.690	3.870	I -	0.450	0.530	8.0	42.590	Z 56.610	70.640	70.640
# X	**MARBLE MASON**	8/22/2013	07/31/2014*	Y 39.300	9.690	11.990	I -	0.800	0.730	8.0	62.510	Z 82.160	101.810	101.810
#	**PAINTER:**													
	BRUSH AND SPRAY	2/22/2014	06/30/2014*	AA 34.830	9.700	Q 10.680	I -	0.410	0.380	D 8.0	56.000	73.420	AB 73.420	90.830
	INDUSTRIAL PAINTER	2/22/2014	06/30/2014*	AA 35.080	9.700	Q 10.680	I -	0.410	0.380	D 8.0	56.250	73.790	AB 73.790	91.330
	SANDBLASTER, STEAM CLEANER, WATERBLASTER	2/22/2014	06/30/2014*	AA 35.330	9.700	Q 10.680	I -	0.410	0.380	D 8.0	56.500	74.170	AB 74.170	91.830
	EXOTIC MATERIALS	2/22/2014	06/30/2014*	AA 35.580	9.700	Q 10.680	I -	0.410	0.380	D 8.0	56.750	74.540	AB 74.540	92.330
	PAPERHANGER/WALLCOVERING	2/22/2014	06/30/2014*	AA 35.830	9.700	Q 10.680	I -	0.410	0.380	D 8.0	57.000	74.920	AB 74.920	92.830
	TAPER	8/22/2014	06/30/2015*	AC 40.320	9.700	10.540	AD -	0.360	0.290	8.0	61.210	77.910	D 77.910	AB 94.620
AE	TAPER CLEAN-UP	8/22/2014	06/30/2015*	AF 16.100	9.700	-	-	-	-	8.0	25.800	33.360	D 33.360	AB 40.920
#	**PLASTERER**	8/22/2014	06/30/2015**	AG 37.480	12.530	10.630	F -	1.050	0.900	D 8.0	62.590	AH 78.760	AH 78.760	94.930
# AI	**PLASTER TENDER**	8/22/2014	06/30/2015**	AJ 32.030	8.970	12.300	F -	0.160	0.450	8.0	53.910	AK 67.930	AK 67.930	81.940
#	**PLUMBER:**													
	UNDERGROUND UTILITY PIPEFITTER	8/22/2014	06/30/2015**	26.550	5.800	AL 3.000	2.000	0.450	0.600	D 8.0	38.400	51.670	51.670	64.950
	LANDSCAPE PIPEFITTER	8/22/2014	06/30/2015**	26.550	5.800	AL 3.000	2.000	0.450	0.600	D 8.0	38.400	51.670	51.670	64.950
AM	UNDERGROUND UTILITY ASSISTANT JOURNEYMAN	8/22/2014	06/30/2015**	15.550	5.800	AL 3.000	2.000	0.450	0.600	D 8.0	27.400	35.170	35.170	42.950
AM	LANDSCAPE ASSISTANT JOURNEYMAN	8/22/2014	06/30/2015**	15.550	5.800	AL 3.000	2.000	0.450	0.600	D 8.0	27.400	35.170	35.170	42.950
AN	UNDERGROUND UTILITY TRADESMAN	8/22/2014	06/30/2015**	10.850	5.800	AL 3.000	2.000	0.450	0.600	D 8.0	22.700	28.130	28.130	33.550
AO	LANDSCAPE TRADESMAN I	8/22/2014	06/30/2015**	10.500	5.800	AL -	2.000	0.450	0.600	D 8.0	19.350	24.600	24.600	29.850
AO	LANDSCAPE TRADESMAN II	8/22/2014	06/30/2015**	10.850	5.800	AL 3.000	2.000	0.450	0.600	D 8.0	22.700	28.130	28.130	33.550

DocuSign Envelope ID: 894511EA-295B-49EB-A393-D26A6837FDD4

GENERAL PREVAILING WAGE DETERMINATION MADE BY THE DIRECTOR OF INDUSTRIAL RELATIONS
PURSUANT TO CALIFORNIA LABOR CODE PART 7, CHAPTER 1, ARTICLE 2, SECTIONS 1770, 1773 AND 1773.1
FOR COMMERCIAL BUILDING, HIGHWAY, HEAVY CONSTRUCTION AND DREDGING PROJECTS

LOCALITY: SAN MATEO COUNTY
DETERMINATION: SMA-2014-2

			EMPLOYER PAYMENTS						STRAIGHT-TIME		OVERTIME HOURLY RATE		
CRAFT (JOURNEY LEVEL)	ISSUE DATE	EXPIRATION DATE	BASIC HOURLY RATE	HEALTH AND WELFARE	PENSION	VACATION/ HOLIDAY	TRAINING	OTHER PAYMENTS	HOURS	TOTAL HOURLY RATE	DAILY	SATURDAY	SUNDAY AND HOLIDAY
PLUMBER, STEAMFITTER	8/22/2014	06/30/2015*	57.500	12.730	AL 17.470	F -	0.960	0.600	D 8.0	89.260	E 118.010	E 118.010	146.760
REFRIGERATION FITTER (HVAC)	8/22/2014	06/30/2015*	57.500	12.730	AL 17.470	F -	0.960	0.600	D 8.0	89.260	E 118.010	E 118.010	146.760
SPRINKLER FITTER (FIRE PROTECTION AND FIRE CONTROL SYSTEMS)	2/22/2014	07/31/2014*	A 52.420	8.770	15.500	F -	1.100	0.400	8.0	78.190	104.400	104.400	130.610
# **ROOFER**	8/22/2014	07/31/2015*	31.660	7.800	5.430	3.530	0.550	AP 0.450	8.0	49.420	AQ 65.250	AQ 65.250	81.080
BITUMASTIC, ENAMELER, PIPE WRAPPER, COAL TAR PITCH BUILD-UP	8/22/2014	07/31/2015*	33.660	7.800	5.430	3.530	0.550	AP 0.450	8.0	51.420	AQ 68.250	AQ 68.250	85.080
MASTIC WORKER, KETTLEMAN (2 KETTLES WITHOUT PUMPS)	8/22/2014	07/31/2015*	31.910	7.800	5.430	3.530	0.550	AP 0.450	8.0	49.670	AQ 65.630	AQ 65.630	81.580
# **SHEET METAL WORKER**	8/22/2014	06/30/2015*	AA 54.850	AR 13.110	AL 21.120	F -	1.410	1.150	8.0	91.640	AS 119.060	AS 119.060	146.490
TOTAL SHEET METAL CONTRACT OF $200,000 OR LESS	8/22/2014	06/30/2015*	AA 48.790	AR 13.110	AL 20.500	F -	1.410	1.150	8.0	84.960	AS 109.350	AS 109.350	133.750
SERVICE MECHANIC (TOTAL SHEET METAL CONTRACT OF $200,000 OR LESS)	8/22/2014	06/30/2015*	AA 35.840	AT 12.590	AL 13.060	F -	1.310	1.150	8.0	63.950	AU 81.870	AU 81.870	99.790
SERVICE TECHNICIAN (TOTAL SHEET METAL CONTRACT OF $200,000 OR LESS)	8/22/2014	06/30/2015*	AA 31.550	AT 12.590	AL 8.930	F -	1.310	1.150	8.0	55.530	AU 71.300	AU 71.300	87.080
AIR CONDITIONING SPECIALIST (TOTAL SHEET METAL CONTRACT OF $200,000 OR LESS)	8/22/2014	06/30/2015*	AA 28.320	AT 12.590	AL 3.770	F -	1.290	1.150	8.0	47.120	AS 61.280	AS 61.280	75.440
AIR CONDITIONING JOURNEYMAN (TOTAL SHEET METAL CONTRACT OF $200,000 OR LESS)	8/22/2014	06/30/2015*	AA 33.130	AR 12.610	AL 8.770	F -	1.290	1.150	8.0	56.950	AS 73.510	AS 73.510	90.080
METAL DECK & SIDING	8/22/2014	12/31/2014*	AA 33.860	AL 13.530	18.000	F -	AV 0.300	-	8.0	65.690	AS 82.620	AS 82.620	99.550
# AW **TERRAZZO FINISHER**	8/22/2014	06/30/2015**	AC 33.190	9.690	5.120	F -	0.800	0.490	8.0	49.290	AS 63.780	AS 63.780	78.280
# AW **TERRAZZO WORKER**	8/22/2014	06/30/2015**	AC 40.420	9.690	14.420	F -	0.800	0.670	8.0	66.000	AS 83.540	AS 83.540	101.080
# **TILE FINISHER**	8/22/2014	03/31/2015**	AX 22.060	8.530	3.440	0.700	0.400	1.090	8.0	36.220	47.250	D 47.250	58.280
RED CIRCLED FINISHER	8/22/2014	03/31/2015**	AX 27.750	8.530	3.670	1.300	0.300	1.100	8.0	42.650	56.530	D 56.530	70.400
# **TILE SETTER**	8/22/2014	03/31/2015**	AX 38.240	8.530	4.670	2.350	0.590	1.680	8.0	56.060	75.180	D 75.180	94.300
WATER WELL DRILLER	8/22/1998	12/31/1998*	12.700	3.200	0.780	AY 0.630	-	-	8.0	17.310	AZ 23.660	AZ 23.660	AZ 23.660
PUMP INSTALLER	8/22/1998	12/31/1998*	12.700	3.200	0.780	AY 0.630	-	-	8.0	17.310	AZ 23.660	AZ 23.660	AZ 23.660
HELPER	8/22/1998	12/31/1998*	10.380	3.200	0.780	BA 0.520	-	-	8.0	14.880	AZ 20.070	AZ 20.070	AZ 20.070

FOOTNOTES

DocuSign Envelope ID: 894511EA-295B-49EB-A393-D26A6837FDD4

GENERAL PREVAILING WAGE DETERMINATION MADE BY THE DIRECTOR OF INDUSTRIAL RELATIONS
PURSUANT TO CALIFORNIA LABOR CODE PART 7, CHAPTER 1, ARTICLE 2, SECTIONS 1770, 1773 AND 1773.1

LOCALITY: SAN MATEO COUNTY

DETERMINATION: SMA-2014-2

*	EFFECTIVE UNTIL SUPERSEDED BY A NEW DETERMINATION ISSUED BY THE DIRECTOR OF INDUSTRIAL RELATIONS. CONTACT THE OFFICE OF THE DIRECTOR – RESEARCH UNIT AT (415) 703-4774 FOR NEW RATES AFTER TEN DAYS AFTER THE EXPIRATION DATE IF NO SUBSEQUENT DETERMINATION IS ISSUED.
**	THE RATE TO BE PAID FOR WORK PERFORMED AFTER THIS DATE HAS BEEN DETERMINED. IF WORK WILL EXTEND PAST THIS DATE, THE NEW RATE MUST BE PAID AND SHOULD BE INCORPORATED IN CONTRACTS ENTERED INTO NOW. CONTACT THE OFFICE OF THE DIRECTOR – RESEARCH UNIT FOR SPECIFIC RATES AT (415) 703-4774.
#	INDICATES AN APPRENTICEABLE CRAFT. THE CURRENT APPRENTICE WAGE RATES ARE AVAILABLE ON THE INTERNET @ HTTP://WWW.DIR.CA.GOV/OPRL/PWAPPWAGE/PWAPPWAGESTART.ASP. TO OBTAIN ANY APPRENTICE WAGE RATES AS OF JULY 1, 2008 AND PRIOR TO SEPTEMBER 27, 2012, PLEASE CONTACT THE DIVISION OF APPRENTICESHIP STANDARDS OR REFER TO THE DIVISION OF APPRENTICESHIP STANDARDS' WEBSITE AT HTTP://WWW.DIR.CA.GOV/DAS/DAS.HTML.
&	THE BASIC HOURLY RATE AND EMPLOYER PAYMENTS ARE NOT TAKEN FROM A COLLECTIVE BARGAINING AGREEMENT FOR THIS CRAFT OR CLASSIFICATION.
A	INCLUDES AMOUNT WITHHELD FOR DUES CHECK OFF.
B	AMOUNT INCLUDED IN FACTORING OVERTIME RATES.
C	INCLUDES AMOUNT FOR INDUSTRY PROMOTION FUND, INTERNATIONAL MASONRY INSTITUTE (IMI), AND LABOR MANAGEMENT COOPERATION COMMITTEE (LMCC)
D	SATURDAYS IN THE SAME WORK WEEK MAY BE WORKED AT STRAIGHT-TIME IF JOB IS SHUT DOWN DURING THE NORMAL WORKWEEK DUE TO INCLEMENT WEATHER.
E	RATE APPLIES TO THE FIRST 2 DAILY OVERTIME HOURS AND THE FIRST 10 HOURS ON SATURDAY; ALL OTHER TIME IS PAID AT THE SUNDAY AND HOLIDAY OVERTIME HOURLY RATE.
F	INCLUDED IN STRAIGHT-TIME HOURLY RATE.
G	RATE APPLIES TO THE FIRST 10 HOURS WORKED ON SATURDAY. ALL OTHER HOURS ARE PAID AT THE SUNDAY/HOLIDAY RATE.
H	RATE APPLIES TO THE FIRST 2 DAILY OVERTIME HOURS AND THE FIRST 8 HOURS ON SATURDAY ONLY. ALL OTHER TIME IS PAID AT THE SUNDAY AND HOLIDAY OVERTIME HOURLY RATE. SATURDAYS IN THE SAME WORK WEEK MAY BE WORKED AT STRAIGHT-TIME IF JOB IS SHUT DOWN DURING THE NORMAL WORKWEEK DUE TO INCLEMENT WEATHER.
I	INCLUDED IN BASIC HOURLY RATE.
J	RATE APPLIES TO THE FIRST 4 DAILY OVERTIME HOURS AND THE FIRST 12 HOURS WORKED ON SATURDAY; ALL OTHER TIME IS PAID AT THE SUNDAY AND HOLIDAY OVERTIME HOURLY RATE.
K	IN ADDITION, AN AMOUNT EQUAL TO 3% OF THE BASIC HOURLY RATE IS ADDED TO THE TOTAL HOURLY RATE AND OVERTIME HOURLY RATES FOR THE NATIONAL EMPLOYEES BENEFIT BOARD.
L	IN ADDITION, AN AMOUNT EQUAL TO 0.5% OF THE BASIC HOURLY RATE, WHICH IS FACTORED AT THE APPLICABLE OVERTIME MULTIPLIER, IS ADDED TO THE TOTAL HOURLY RATE AND OVERTIME HOURLY RATES.
M	RATE APPLIES TO THE FIRST 4 DAILY OVERTIME HOURS AND THE FIRST 8 HOURS WORKED ON SATURDAY. ALL OTHER TIME IS PAID AT THE SUNDAY AND HOLIDAY OVERTIME RATE.
N	IN ADDITION, AN AMOUNT EQUAL TO 3% OF THE BASIC HOURLY RATE IS ADDED TO THE TOTAL HOURLY RATE AND OVERTIME HOURLY RATES FOR THE NATIONAL EMPLOYEES BENEFIT BOARD. PURSUANT LABOR CODE SECTIONS 1773.1 AND 1773.8, THE AMOUNT PAID FOR THIS EMPLOYER PAYMENT MAY VARY RESULTING IN A LOWER TAXABLE BASIC HOURLY WAGE RATE, BUT THE TOTAL HOURLY RATES FOR STRAIGHT TIME AND OVERTIME MAY NOT BE LESS THAN THE GENERAL PREVAILING RATE OF PER DIEM WAGES.
O	RATE APPLIES TO THE FIRST 2 OVERTIME HOURS; ALL OTHER TIME IS PAID AT THE SATURDAY OVERTIME HOURLY RATE.
P	ALL CREWS, WITHOUT CONSIDERATION TO THE NUMBER OF INDIVIDUALS IN THE CREW, SHALL INCLUDE A CHIEF OF PARTY. A CREW CONSISTS OF ONE (1) OR MORE EMPLOYEES PERFORMING FIELD AND CONSTRUCTION SURVEY WORK.
Q	INCLUDES AN AMOUNT PER HOUR WORKED FOR ANNUITY TRUST FUND.
R	INCLUDES AN AMOUNT PER HOUR WORKED FOR SUPPLEMENTAL DUES.
S	RATE APPLIES TO THE FIRST 4 DAILY OVERTIME HOURS, MONDAY THROUGH FRIDAY. ALL OTHER OVERTIME IS PAID AT THE SUNDAY/HOLIDAY RATE.
T	RATE APPLIES TO THE FIRST 12 OVERTIME HOURS WORKED. ALL OTHER OVERTIME IS PAID AT THE SUNDAY/HOLIDAY RATE. IN THE EVENT IT IS NOT REASONABLY POSSIBLE TO COMPLETE 40 HOURS OF WORK ON AN 8 HOUR DAY, MONDAY THROUGH FRIDAY, THEN THE BALANCE OF THE 40 HOURS, UP TO 8 HOURS, MAY BE WORKED ON SATURDAY AT THE STRAIGHT-TIME RATE.
U	INCLUDES AN AMOUNT PER HOUR WORKED FOR IUPAT, IARP, AND RETIREE PENSION.
V	INCLUDES AMOUNTS FOR INDUSTRY FUND, WORK PRESERVATION FUND, AND LABOR MANAGEMENT COOPERATION INITIATIVE
W	RATE APPLIES TO THE FIRST 2 DAILY OVERTIME HOURS AND FIRST 8 HOURS WORKED ON DESIGNATED DAYS OFF; ALL OTHER TIME IS PAID AT THE SATURDAY, SUNDAY AND HOLIDAY OVERTIME RATE.
X	EMPLOYEES WORKING ON ANY SUSPENDED PLATFORM/SCAFFOLD SHALL BE PAID AN ADDITIONAL $15.00 PER DAY ABOVE THE WAGE RATE.
Y	INCLUDES AN AMOUNT FOR DUES CHECK-OFF AND VACATION/HOLIDAY WHICH ARE FACTORED INTO OVERTIME RATES.
Z	RATE APPLIES TO FIRST 2 OVERTIME HOURS MONDAY THROUGH FRIDAY; ALL OTHER OVERTIME IS PAID AT THE DOUBLE TIME RATE.
AA	INCLUDES AMOUNT FOR VAC/HOL AND DUES CHECK OFF.
AB	DESIGNATED DAYS OFF SHALL BE PAID AT THE SATURDAY OVERTIME RATE; PLEASE REFER TO THE HOLIDAY PROVISIONS FOR A LIST OF DESIGNATED DAYS OFF.
AC	INCLUDES AN AMOUNT FOR VACATION/DUES CHECK OFF WHICH IS NOT FACTORED IN THE OVERTIME RATES.
AD	INCLUDED IN STRAIGHT-TIME HOURLY RATE WHICH IS NOT FACTORED IN THE OVERTIME RATES.
AE	PLEASE NOTE THAT THE TAPER CLEAN-UP APPLIES ONLY TO THE TAPER CLASSIFICATION.
AF	INCLUDES AN AMOUNT WITHHELD FOR DUES CHECK OFF WHICH IS NOT FACTORED IN OVERTIME AND HOLIDAY WAGE RATES.

DocuSign Envelope ID: 894511EA-295B-49EB-A393-D26A6837FDD4

LOCALITY: SAN MATEO COUNTY

DETERMINATION: SMA-2014-2

AG INCLUDE AMOUNTS WITHHELD FOR DUES CHECK OFF AND VACATION WHICH IS NOT FACTORED INTO OVERTIME. EMPLOYEES OPERATING AND WORKING BEHIND PLASTER GUNS SHALL RECEIVE AN ADDITIO $5.00 PER DAY ABOVE THE WAGE RATE. EMPLOYEES WORKING ON AN EXTERIOR SUSPENDED SCAFFOLD SHALL BE PAID AN ADDITIONAL $10.00 PER DAY ABOVE THE WAGE RATE.

AH RATE APPLIES TO THE FIRST 4 OVERTIME HOURS MONDAY THROUGH FRIDAY AND THE FIRST 8 HOURS WORKED ON SATURDAYS AND DESIGNATED DAYS OFF. ALL OTHER TIME IS PAID AT THE SUNDAY AND HOLIDAY OVERTIME RATE.

AI ALL HOD CARRIERS WORKING ON THE HOSE SHALL RECEIVE $5.00 PER DAY OVER SCALE.

AJ INCLUDES AN AMOUNT FOR VACATION, DUES CHECK-OFF AND ORGANIZING DUES WHICH ARE NOT FACTORED INTO OVERTIME.

AK RATE APPLIES TO THE FIRST 4 OVERTIME HOURS MONDAY THROUGH FRIDAY AND THE FIRST 8 HOURS WORKED ON SATURDAY. ALL OTHER TIME IS PAID AT THE SUNDAY AND HOLIDAY OVERTIME RATE.

AL PURSUANT TO LABOR CODE SECTIONS 1773.1 AND 1773.8, THE AMOUNT PAID FOR THIS EMPLOYER PAYMENT MAY VARY RESULTING IN A LOWER TAXABLE BASIC HOURLY WAGE RATE, BUT THE TOTAL HOURLY RATES FOR STRAIGHT TIME AND OVERTIME MAY NOT BE LESS THAN THE GENERAL PREVAILING RATE OF PER DIEM WAGES.

AM THERE MUST BE AT LEAST ONE JOURNEYMAN PIPEFITTER PER CONTRACTOR ON EACH JOBSITE.

AN THERE SHALL BE NO MORE THAN THREE TRADESMEN TO EVERY TWO JOURNEYMAN PIPEFITTER/ASSISTANT JOURNEYMAN PIPEFITTER COMBINATION EMPLOYED PER CONTRACTOR ON EACH JOBSITE.

AO THERE SHALL BE NO MORE THAN FOUR TRADESMEN TO EVERY TWO JOURNEYMAN PIPEFITTER/ASSISTANT JOURNEYMAN PIPEFITTER COMBINATION EMPLOYED PER CONTRACTOR ON EACH JOBSITE. MAINTENANCE WORK, BOTH DURING AND AFTER THE PLANT ESTABLISHMENT PERIOD, MAY BE PERFORMED BY LANDSCAPE TRADESMEN WITHOUT THE SUPERVISION OF A JOURNEYMAN PIPEFITTER.

AP INCLUDES AMOUNTS FOR LABOR MANAGEMENT AND PROMOTION FUND

AQ RATE APPLIES FOR THE FIRST 4 OVERTIME HOURS MONDAY THROUGH FRIDAY AND THE FIRST 12 HOURS WORKED ON SATURDAY. ALL OTHER TIME IS PAID AT THE SUNDAY/HOLIDAY RATE. SATURDAYS THE SAME WORKWEEK MAY BE WORKED AT STRAIGHT-TIME IF JOB IS SHUT DOWN DURING THE NORMAL WORKWEEK DUE TO INCLEMENT WEATHER.

AR INCLUDES SMOHIT AND SHC. EFFECTIVE 1/1/2013, PURSUANT TO LABOR CODE SECTIONS 1773.1 AND 1773.8, THE AMOUNT PAID FOR THIS EMPLOYER PAYMENT MAY VARY RESULTING IN A LOWER TAXABLE BASIC HOURLY WAGE RATE, BUT THE TOTAL HOURLY RATES FOR STRAIGHT TIME AND OVERTIME MAY NOT BE LESS THAN THE GENERAL PREVAILING RATE OF PER DIEM WAGES.

AS RATE APPLIES TO THE FIRST 2 DAILY OVERTIME HOURS AND THE FIRST 8 HOURS ON SATURDAY ONLY; ALL OTHER TIME IS PAID AT THE SUNDAY AND HOLIDAY OVERTIME HOURLY RATE.

AT INCLUDES SHC. EFFECTIVE 1/1/2013, PURSUANT TO LABOR CODE SECTIONS 1773.1 AND 1773.8, THE AMOUNT PAID FOR THIS EMPLOYER PAYMENT MAY VARY RESULTING IN A LOWER TAXABLE BASIC HOURLY WAGE RATE, BUT THE TOTAL HOURLY RATES FOR STRAIGHT TIME AND OVERTIME MAY NOT BE LESS THAN THE GENERAL PREVAILING RATE OF PER DIEM WAGES.

AU RATE APPLIES TO FIRST 4 DAILY OVERTIME HOURS AND THE FIRST 8 HOURS WORKED ON SATURDAY DURING THE EMPLOYEES NORMAL WORKING HOURS. ALL OTHER OVERTIME HOURS SHALL BE PAID AT THE SUNDAY AND HOLIDAY DOUBLE TIME RATE.

AV INCLUDES $0.03 FOR SCHOLAR FUND.

AW THE RATIO OF TERRAZZO FINISHER HOURS TO TERRAZZO WORKER HOURS SHALL NOT EXCEED TWO (2) TO ONE (1).

AX INCLUDES AMOUNT WITHHELD FOR DUES CHECK OFF, WHICH IS FACTORED IN THE OVERTIME RATES. ANY EMPLOYEE WORKING UNDERGROUND SHALL RECEIVE $1.00 PER HOUR IN ADDITION TO REGULAR WAGES.

AY RATE APPLIES TO FIRST YEAR OF EMPLOYMENT ONLY; $0.88 AFTER 2 YEARS OF EMPLOYMENT.

AZ RATE APPLIES TO ALL TIME WORKED IN EXCESS OF 8 HOURS PER DAY OR 40 HOURS PER WEEK AND FOR ALL HOURS ON SUNDAYS AND HOLIDAYS. RATE DOES NOT INCLUDE ANY ADDITIONAL AMOUNT THAT MAY BE REQUIRED FOR VACATION/HOLIDAY PAYMENT.

BA RATE APPLIES TO FIRST YEAR OF EMPLOYMENT ONLY; $0.72 AFTER 2 YEARS OF EMPLOYMENT.

RECOGNIZED HOLIDAYS: HOLIDAYS UPON WHICH THE GENERAL PREVAILING HOURLY WAGE RATE FOR HOLIDAY WORK SHALL BE PAID, SHALL BE ALL HOLIDAYS IN THE COLLECTIVE BARGAINING AGREEMEN APPLICABLE TO THE PARTICULAR CRAFT, CLASSIFICATION, OR TYPE OF WORKER EMPLOYED ON THE PROJECT, WHICH IS ON FILE WITH THE DIRECTOR OF INDUSTRIAL RELATIONS. IF THE PREVAIL RATE IS NOT BASED ON A COLLECTIVELY BARGAINED RATE, THE HOLIDAYS UPON WHICH THE PREVAILING RATE SHALL BE PAID SHALL BE AS PROVIDED IN SECTION 6700 OF THE GOVERNMENT CODE. YOU MAY OBTAIN THE HOLIDAY PROVISIONS FOR THE CURRENT DETERMINATIONS ON THE INTERNET AT HTTP://WWW.DIR.CA.GOV/OPRL/PWD. HOLIDAY PROVISIONS FOR CURRENT OR SUPERSEDED DETERMINATIONS MAY BE OBTAINED BY CONTACTING THE OFFICE OF THE DIRECTOR - RESEARCH UNIT AT (415) 703-4774.

TRAVEL AND/OR SUBSISTENCE PAYMENT: IN ACCORDANCE WITH LABOR CODE SECTIONS 1773.1 AND 1773.9, CONTRACTORS SHALL MAKE TRAVEL AND/OR SUBSISTENCE PAYMENTS TO EACH WORKER TO EXECUTE THE WORK. YOU MAY OBTAIN THE TRAVEL AND/OR SUBSISTENCE PROVISIONS FOR THE CURRENT DETERMINATIONS ON THE INTERNET @ HTTP://WWW.DIR.CA.GOV/OPRL/PWD. TRAVEL AND/OR SUBSISTENCE REQUIREMENTS FOR CURRENT OR SUPERSEDED DETERMINATIONS MAY BE OBTAINED FROM THE OFFICE OF THE DIRECTOR - RESEARCH UNIT AT (415) 703-4774.

SMA-2014-2-Determination

DocuSign Envelope ID: 894511EA-295B-49EB-A393-D26A6837FDD4

GENERAL PREVAILING WAGE DETERMINATION MADE BY THE DIRECTOR OF INDUSTRIAL RELATIONS
PURSUANT TO CALIFORNIA LABOR CODE PART 7, CHAPTER 1, ARTICLE 2, SECTIONS 1770, 1773 AND 1773.1
FOR COMMERCIAL BUILDING, HIGHWAY, HEAVY CONSTRUCTION AND DREDGING PROJECTS

LOCALITY: SAN MATEO COUNTY
DETERMINATION: SMA-2014-2

	CRAFT (JOURNEY LEVEL)	ISSUE DATE	EXPIRATION DATE	INCREASE 1		INCREASE 2		INCREASE 3		INCREASE 4		INCREASE 5		INCREASE 6		INCREASE 7	
				DATE OF NEXT CHANGE	AMOUNT OF INCREASE	DATE OF NEXT CHANGE	AMOUNT OF INCREASE	DATE OF NEXT CHANGE	AMOUNT OF INCREASE	DATE OF NEXT CHANGE	AMOUNT OF INCREASE	DATE OF NEXT CHANGE	AMOUNT OF INCREASE	DATE OF NEXT CHANGE	AMOUNT OF INCREASE	DATE OF NEXT CHANGE	AMOUNT OF INCREASE
	ELECTRICIAN:																
	INSIDE WIREMAN, TECHNICIAN	8/22/2014	05/31/2015**	6/1/2015	$3.05 A	6/1/2016	$3.05 A	6/1/2017	$3.05 A								
	PLASTERER	8/22/2014	06/30/2015**	7/1/2015	$1.70 A	7/1/2016	$1.70 A										
B	**PLASTER TENDER**	8/22/2014	06/30/2015**	7/1/2015	$1.25 C												
	PLUMBER:																
	UNDERGROUND UTILITY PIPEFITTER	8/22/2014	06/30/2015**	7/1/2015	$0.85 D	7/1/2016	$0.80 E										
	LANDSCAPE PIPEFITTER	8/22/2014	06/30/2015**	7/1/2015	$0.85 D	7/1/2016	$0.80 E										
F	UNDERGROUND UTILITY ASSISTANT JOURNEYMAN	8/22/2014	06/30/2015**	7/1/2015	$0.85 D	7/1/2016	$0.80 E										
F	LANDSCAPE ASSISTANT JOURNEYMAN	8/22/2014	06/30/2015**	7/1/2015	$0.85 D	7/1/2016	$0.80 E										
G	UNDERGROUND UTILITY TRADESMAN	8/22/2014	06/30/2015**	7/1/2015	$0.85 D	7/1/2016	$0.80 E										
H	LANDSCAPE TRADESMAN I	8/22/2014	06/30/2015**	7/1/2015	$0.85 D	7/1/2016	$0.80 E										
H	LANDSCAPE TRADESMAN II	8/22/2014	06/30/2015**	7/1/2015	$0.85 D	7/1/2016	$0.80 E										
I	**TERRAZZO FINISHER**	8/22/2014	06/30/2015**	7/1/2015	$0.75 A	7/1/2016	$1.00 A	7/1/2017	$1.00 A	7/1/2018	$1.25 A						
I	**TERRAZZO WORKER**	8/22/2014	06/30/2015**	7/1/2015	$1.25 A	7/1/2016	$1.50 A	7/1/2017	$1.75 A	7/1/2018	$2.00 A						
	TILE FINISHER	8/22/2014	03/31/2015**	4/1/2015	$1.14 A												
	RED CIRCLED FINISHER	8/22/2014	03/31/2015**	4/1/2015	$1.14 A												
	TILE SETTER	8/22/2014	03/31/2015**	4/1/2015	$1.75 A												

FOOTNOTES

DocuSign Envelope ID: 894511EA-295B-49EB-A393-D26A6837FDD4

GENERAL PREVAILING WAGE DETERMINATION MADE BY THE DIRECTOR OF INDUSTRIAL RELATIONS

PURSUANT TO CALIFORNIA LABOR CODE PART 7, CHAPTER 1, ARTICLE 2, SECTIONS 1770, 1773 AND 1773.1

LOCALITY: SAN MATEO COUNTY

DETERMINATION: SMA-2014-2

A THE PREDETERMINED INCREASE SHOWN IS TO BE ALLOCATED TO WAGES AND/OR EMPLOYER PAYMENTS. PLEASE CONTACT THE OFFICE OF THE DIRECTOR - RESEARCH UNIT AT (415) 703-4774 WHEN THE PREDETERMINED INCREASE BECOMES DUE TO CONFIRM THE DISTRIBUTION. PLEASE ALSO EXAMINE THE IMPORTANT NOTICES TO SEE IF ANY MODIFICATIONS HAVE BEEN ISSUED, AS THERE MAY BE REDUCTIONS TO PREDETERMINED INCREASES.

B ALL HOD CARRIERS WORKING ON THE HOSE SHALL RECEIVE $5.00 PER DAY OVER SCALE.

C $0.25 TO HEALTH & WELFARE AND $1.00 TO PENSION.

D $0.05 TO THE BASIC HOURLY RATE AND $0.80 TO HEALTH AND WELFARE

E $0.10 TO THE BASIC HOURLY RATE, $0.60 TO HEALTH AND WELFARE, AND $0.10 TO VACATION

F THERE MUST BE AT LEAST ONE JOURNEYMAN PIPEFITTER PER CONTRACTOR ON EACH JOBSITE.

G THERE SHALL BE NO MORE THAN THREE TRADESMEN TO EVERY TWO JOURNEYMAN PIPEFITTER/ASSISTANT JOURNEYMAN PIPEFITTER COMBINATION EMPLOYED PER CONTRACTOR ON EACH JOBSITE.

H THERE SHALL BE NO MORE THAN FOUR TRADESMEN TO EVERY TWO JOURNEYMAN PIPEFITTER/ASSISTANT JOURNEYMAN PIPEFITTER COMBINATION EMPLOYED PER CONTRACTOR ON EACH JOBSITE. MAINTENANCE WORK, BOTH DURING AND AFTER THE PLANT ESTABLISHMENT PERIOD, MAY BE PERFORMED BY LANDSCAPE TRADESMEN WITHOUT THE SUPERVISION OF A JOURNEYMAN PIPEFITTER.

I THE RATIO OF TERRAZZO FINISHER HOURS TO TERRAZZO WORKER HOURS SHALL NOT EXCEED TWO (2) TO ONE (1).

SMA-2014-2-INC

DocuSign Envelope ID: 894511EA-295B-49EB-A393-D26A6837FDD4

GENERAL PREVAILING WAGE DETERMINATION MADE BY THE DIRECTOR OF INDUSTRIAL RELATIONS
PURSUANT TO CALIFORNIA LABOR CODE PART 7, CHAPTER 1, ARTICLE 2, SECTIONS 1770, 1773 AND 1773.1
FOR COMMERCIAL BUILDING, HIGHWAY, HEAVY CONSTRUCTION AND DREDGING PROJECTS

LOCALITY: SANTA CLARA COUNTY
DETERMINATION: STC-2014-2

				EMPLOYER PAYMENTS						STRAIGHT-TIME		OVERTIME HOURLY RATE		
	CRAFT (JOURNEY LEVEL)	ISSUE DATE	EXPIRATION DATE	BASIC HOURLY RATE	HEALTH AND WELFARE	PENSION	VACATION/ HOLIDAY	TRAINING	OTHER PAYMENTS	HOURS	TOTAL HOURLY RATE	DAILY	SATURDAY	SUNDAY AND HOLIDAY
#	**BRICKLAYER, BLOCKLAYER:**													
	BRICKLAYER, BLOCKLAYER, STONEMASON	8/22/2013	04/30/2014*	A 37.980	9.690	10.000	B 3.000	0.800	C 1.230	D 8.0	62.700	E 83.190	E 83.190	103.680
	POINTER, CLEANER, CAULKER, WATERPROOFER	8/22/2014	06/30/2015*	A 42.080	9.690	10.520	F -	1.440	0.400	D 8.0	64.130	85.170	G 85.170	106.210
#	**BRICK TENDER**	8/22/2013	04/30/2014*	H 31.000	9.280	7.990	F -	0.340	-	I 8.0	48.610	J 64.110	J 64.110	79.610
#	**CARPET, LINOLEUM,**													
	SOFT FLOOR LAYER	8/22/2014	06/30/2015*	A 44.820	9.700	8.050	K -	0.530	0.340	8.0	63.440	L 85.850	L 85.850	108.260
	FLOOR COVERING HANDLER AFTER 3 YEARS	8/22/2014	06/30/2015*	A 22.390	9.700	4.030	K -	0.050	0.340	8.0	36.510	L 47.700	L 47.700	58.900
	FLOOR COVERING HANDLER LESS THAN 3 YEARS	8/22/2014	06/30/2015*	A 17.900	9.700	3.220	K -	0.050	0.340	8.0	31.210	L 40.160	L 40.160	49.110
	FLOOR COVERING HANDLER TRAINEE, FIRST 3 MONTHS	8/22/2014	06/30/2015*	A 14.310	9.700	2.580	K -	0.050	0.340	8.0	26.980	L 34.140	L 34.140	41.290
	FLOOR COVERING HANDLER TRAINEE, SECOND 3 MONTHS	8/22/2014	06/30/2015*	A 16.110	9.700	2.900	K -	0.050	0.340	8.0	29.100	L 37.160	L 37.160	45.210
#	**ELECTRICIAN:**													
	COMM & SYSTEM INSTALLER	2/22/2014	11/30/2014*	31.320	9.550	M 4.650	-	1.100	N 0.210	8.0	47.930	O 64.140	O 64.140	80.350
	COMM & SYSTEM TECH.	2/22/2014	11/30/2014*	35.660	9.550	M 4.650	-	1.100	N 0.210	8.0	52.420	O 70.870	O 70.870	89.330
	INSIDE WIREMAN, TECHNICIAN	8/22/2014	05/31/2015*	P 54.270	12.980	Q 16.400	-	0.850	R 0.510	8.0	86.640	S 114.590	S 114.590	142.540
	CABLE SPLICER	8/22/2014	05/31/2015*	P 62.410	12.980	Q 16.400	-	0.850	R 0.550	8.0	95.060	S 127.200	S 127.200	159.340
T	MATERIAL HANDLER	8/22/2010	07/31/2011*	21.720	7.350	M 2.200	-	-	0.220	8.0	32.140	43.330	43.330	54.510
T	MATERIAL HANDLER - FOURTH SIX MONTHS	8/22/2010	07/31/2011*	18.460	7.350	M 2.200	-	-	0.220	8.0	28.780	38.290	38.290	47.800
T	MATERIAL HANDLER - THIRD SIX MONTHS	8/22/2010	07/31/2011*	16.290	7.350	M 2.200	-	-	0.190	8.0	26.520	34.910	34.910	43.300
T	MATERIAL HANDLER - SECOND SIX MONTHS	8/22/2010	07/31/2011*	14.120	7.350	M 2.200	-	-	0.180	8.0	24.270	31.550	31.550	38.820
T	MATERIAL HANDLER - FIRST SIX MONTHS	8/22/2010	07/31/2011*	13.030	-	M -	-	-	0.180	8.0	13.600	20.310	20.310	27.020
#	**FIELD SURVEYOR:**													
U	CHIEF OF PARTY	2/22/2014	02/28/2015*	37.290	12.530	V 10.000	W 3.380	0.720	0.160	8.0	64.080	X 82.720	Y 82.720	101.370
U	INSTRUMENTMAN	2/22/2014	02/28/2015*	34.200	12.530	V 10.000	W 3.380	0.720	0.160	8.0	60.990	X 78.090	Y 78.090	95.190
U	CHAINMAN/RODMAN	2/22/2014	02/28/2015*	31.320	12.530	V 10.000	W 3.380	0.720	0.160	8.0	58.110	X 73.770	Y 73.770	89.430
#	**GLAZIER**	8/22/2014	06/30/2015*	A 41.830	9.700	Z 12.140	-	0.500	AA 0.380	8.0	64.550	AB 85.470	106.380	106.380
# AC	**MARBLE FINISHER**	8/22/2013	07/31/2014*	AD 28.050	9.690	3.870	K -	0.450	0.530	8.0	42.590	AE 56.610	70.640	70.640
# AC	**MARBLE MASON**	8/22/2013	07/31/2014*	AD 39.300	9.690	11.990	K -	0.800	0.730	8.0	62.510	AE 82.160	101.810	101.810
#	**PAINTER:**													
	BRUSH AND SPRAY	2/22/2014	06/30/2014*	H 34.830	9.700	V 10.680	K -	0.410	0.380	D 8.0	56.000	73.420	AF 73.420	90.830
	INDUSTRIAL PAINTER	2/22/2014	06/30/2014*	H 35.080	9.700	V 10.680	K -	0.410	0.380	D 8.0	56.250	73.790	AF 73.790	91.330
	SANDBLASTER, STEAM CLEANER, WATERBLASTER	2/22/2014	06/30/2014*	H 35.330	9.700	V 10.680	K -	0.410	0.380	D 8.0	56.500	74.170	AF 74.170	91.830
	EXOTIC MATERIALS	2/22/2014	06/30/2014*	H 35.580	9.700	V 10.680	K -	0.410	0.380	D 8.0	56.750	74.540	AF 74.540	92.330
	PAPERHANGER/WALLCOVERING	2/22/2014	06/30/2014*	H 35.830	9.700	V 10.680	K -	0.410	0.380	D 8.0	57.000	74.920	AF 74.920	92.830
	TAPER	8/22/2014	06/30/2015*	AG 40.320	9.700	10.540	AH -	0.360	0.290	8.0	61.210	77.910	D 77.910	AF 94.620
AI	TAPER CLEAN-UP	8/22/2014	06/30/2015*	AJ 16.100	9.700	-	-	-	-	8.0	25.800	33.360	D 33.360	AF 40.920
#	**PLASTERER**	8/22/2014	06/30/2015**	AK 30.270	12.530	8.680	3.000	1.050	1.000	8.0	56.530	70.820	AL 70.820	85.120
# AM	**PLASTER TENDER**	8/22/2014	06/30/2015**	AN 32.600	9.000	10.120	K -	0.250	AO 0.250	8.0	52.220	AP 66.670	AP 66.670	81.120
#	**PLUMBER:**													
	UNDERGROUND UTILITY PIPEFITTER	8/22/2014	06/30/2015**	26.550	5.800	AQ 3.000	2.000	0.450	0.600	D 8.0	38.400	51.670	51.670	64.950
	LANDSCAPE PIPEFITTER	8/22/2014	06/30/2015**	26.550	5.800	AQ 3.000	2.000	0.450	0.600	D 8.0	38.400	51.670	51.670	64.950

DocuSign Envelope ID: 894511EA-295B-49EB-A393-D26A6837FDD4

GENERAL PREVAILING WAGE DETERMINATION MADE BY THE DIRECTOR OF INDUSTRIAL RELATIONS
PURSUANT TO CALIFORNIA LABOR CODE PART 7, CHAPTER 1, ARTICLE 2, SECTIONS 1770, 1773 AND 1773.1
FOR COMMERCIAL BUILDING, HIGHWAY, HEAVY CONSTRUCTION AND DREDGING PROJECTS

LOCALITY: SANTA CLARA COUNTY
DETERMINATION: STC-2014-2

				EMPLOYER PAYMENTS						STRAIGHT-TIME		OVERTIME HOURLY RATE		
	CRAFT (JOURNEY LEVEL)	ISSUE DATE	EXPIRATION DATE	BASIC HOURLY RATE	HEALTH AND WELFARE	PENSION	VACATION/ HOLIDAY	TRAINING	OTHER PAYMENTS	HOURS	TOTAL HOURLY RATE	DAILY	SATURDAY	SUNDAY AND HOLIDAY
AR	UNDERGROUND UTILITY ASSISTANT JOURNEYMAN	8/22/2014	06/30/2015**	15.550	5.800	AQ 3.000	2.000	0.450	0.600	D 8.0	27.400	35.170	35.170	42.950
AR	LANDSCAPE ASSISTANT JOURNEYMAN	8/22/2014	06/30/2015**	15.550	5.800	AQ 3.000	2.000	0.450	0.600	D 8.0	27.400	35.170	35.170	42.950
AS	UNDERGROUND UTILITY TRADESMAN	8/22/2014	06/30/2015**	10.850	5.800	AQ 3.000	2.000	0.450	0.600	D 8.0	22.700	28.130	28.130	33.550
AT	LANDSCAPE TRADESMAN I	8/22/2014	06/30/2015**	10.500	5.800	AQ -	2.000	0.450	0.600	D 8.0	19.350	24.600	24.600	29.850
AT	LANDSCAPE TRADESMAN II	8/22/2014	06/30/2015**	10.850	5.800	AQ 3.000	2.000	0.450	0.600	D 8.0	22.700	28.130	28.130	33.550
	PLUMBER, STEAMFITTER, REFRIGERATION FITTER (HVAC)	8/22/2014	06/30/2015*	A 57.410	AU 14.310	AV 16.320	F -	1.450	AW 1.350	8.0	90.840	E 121.800	E 121.800	AX 152.750
	CONSTRUCTION TRADESMAN (YEAR 2)	8/22/2014	06/30/2015*	A 19.230	AQ 10.700	AQ 0.500	F -	-	AY 0.250	8.0	30.680	E 40.300	E 40.300	49.910
	CONSTRUCTION TRADESMAN (YEAR 3)	8/22/2014	06/30/2015*	A 24.830	AQ 10.700	AQ 0.500	F -	-	AY 0.250	8.0	36.280	E 48.700	E 48.700	61.110
	CONSTRUCTION TRADESMAN (YEAR 4)	8/22/2014	06/30/2015*	A 26.210	AQ 10.700	AQ 0.500	F -	-	AY 0.250	8.0	37.660	E 50.770	E 50.770	63.870
	CONSTRUCTION TRADESMAN (YEAR 5)	8/22/2014	06/30/2015*	A 29.200	AQ 10.700	AQ 2.250	F -	-	AY 0.250	8.0	42.400	E 57.010	E 57.010	71.600
	SERVICE AND REPAIR	8/22/2014	06/30/2015*	A 57.410	AU 14.310	AV 16.320	F -	1.450	AW 1.350	8.0	90.840	121.800	AZ 121.800	121.800
	SPRINKLER FITTER (FIRE PROTECTION AND FIRE CONTROL SYSTEMS)	2/22/2014	07/31/2014*	A 52.420	8.770	15.500	F -	1.100	0.400	8.0	78.190	104.400	104.400	130.610
#	**ROOFER**													
	ROOFER, KETTLEMAN	8/22/2014	07/31/2015*	AJ 34.740	8.860	5.130	2.400	0.550	0.540	8.0	52.220	BA 68.990	BB 68.990	85.750
	HELPER	8/22/2014	07/31/2015*	AJ 31.390	8.860	5.130	2.400	0.550	0.540	8.0	48.870	BA 63.960	BB 63.960	79.050
	KETTLEMAN (2 KETTLES)	8/22/2014	07/31/2015*	AJ 36.740	8.860	5.130	2.400	0.550	0.540	8.0	54.220	BA 71.990	BB 71.990	89.750
	BITUMASTIC, ENAMELER, COAL TAR, PITCH AND MASTIC WORKER	8/22/2014	07/31/2015*	AJ 36.740	8.860	5.130	2.400	0.550	0.540	8.0	54.220	BA 71.990	BB 71.990	89.750
#	**SHEET METAL WORKER**	8/22/2014	06/30/2015*	H 54.850	BC 13.110	AQ 21.120	F -	1.410	1.150	8.0	91.640	J 119.060	J 119.060	146.490
	TOTAL SHEET METAL CONTRACT OF $200,000 OR LESS	8/22/2014	06/30/2015*	H 48.790	BC 13.110	AQ 20.500	F -	1.410	1.150	8.0	84.960	J 109.350	J 109.350	133.750
	SERVICE MECHANIC (TOTAL SHEET METAL CONTRACT OF $200,000 OR LESS)	8/22/2014	06/30/2015*	H 35.840	BD 12.590	AQ 13.060	F -	1.310	1.150	8.0	63.950	BE 81.870	BE 81.870	99.790
	SERVICE TECHNICIAN (TOTAL SHEET METAL CONTRACT OF $200,000 OR LESS)	8/22/2014	06/30/2015*	H 31.550	BD 12.590	AQ 8.930	F -	1.310	1.150	8.0	55.530	BE 71.300	BE 71.300	87.080
	AIR CONDITIONING SPECIALIST (TOTAL SHEET METAL CONTRACT OF $200,000 OR LESS)	8/22/2014	06/30/2015*	H 28.320	BD 12.590	AQ 3.770	F -	1.290	1.150	8.0	47.120	J 61.280	J 61.280	75.440
	AIR CONDITIONING JOURNEYMAN (TOTAL SHEET METAL CONTRACT OF $200,000 OR LESS)	8/22/2014	06/30/2015*	H 33.130	BC 12.610	AQ 8.770	F -	1.290	1.150	8.0	56.950	J 73.510	J 73.510	90.080
	METAL DECK & SIDING	8/22/2014	12/31/2014*	H 33.860	AQ 13.530	18.000	F -	BF 0.300	-	8.0	65.690	J 82.620	J 82.620	99.550
# BG	**TERRAZZO FINISHER**	8/22/2014	06/30/2015**	AG 33.190	9.690	5.120	F -	0.800	0.490	8.0	49.290	J 63.780	J 63.780	78.280
# BG	**TERRAZZO WORKER**	8/22/2014	06/30/2015**	AG 40.420	9.690	14.420	F -	0.800	0.670	8.0	66.000	J 83.540	J 83.540	101.080
#	**TILE FINISHER**	8/22/2014	03/31/2015**	BH 22.060	8.530	3.440	0.700	0.400	1.090	8.0	36.220	47.250	D 47.250	58.280
	RED CIRCLED FINISHER	8/22/2014	03/31/2015**	BH 27.750	8.530	3.670	1.300	0.300	1.100	8.0	42.650	56.530	D 56.530	70.400
#	**TILE SETTER**	8/22/2014	03/31/2015**	BH 38.240	8.530	4.670	2.350	0.590	1.680	8.0	56.060	75.180	D 75.180	94.300
	WATER WELL DRILLER	8/22/1998	12/31/1998*	12.700	3.200	0.780	BI 0.630	-	-	8.0	17.310	BJ 23.660	BJ 23.660	BJ 23.660
	PUMP INSTALLER	8/22/1998	12/31/1998*	12.700	3.200	0.780	BI 0.630	-	-	8.0	17.310	BJ 23.660	BJ 23.660	BJ 23.660
	HELPER	8/22/1998	12/31/1998*	10.380	3.200	0.780	BK 0.520	-	-	8.0	14.880	BJ 20.070	BJ 20.070	BJ 20.070

FOOTNOTES

DocuSign Envelope ID: 894511EA-295B-49EB-A393-D26A6837FDD4

GENERAL PREVAILING WAGE DETERMINATION MADE BY THE DIRECTOR OF INDUSTRIAL RELATIONS
PURSUANT TO CALIFORNIA LABOR CODE PART 7, CHAPTER 1, ARTICLE 2, SECTIONS 1770, 1773 AND 1773.1

LOCALITY: SANTA CLARA COUNTY

DETERMINATION: STC-2014-2

*	EFFECTIVE UNTIL SUPERSEDED BY A NEW DETERMINATION ISSUED BY THE DIRECTOR OF INDUSTRIAL RELATIONS. CONTACT THE OFFICE OF THE DIRECTOR – RESEARCH UNIT AT (415) 703-4774 FOR NEW RATES AFTER TEN DAYS AFTER THE EXPIRATION DATE IF NO SUBSEQUENT DETERMINATION IS ISSUED.
**	THE RATE TO BE PAID FOR WORK PERFORMED AFTER THIS DATE HAS BEEN DETERMINED. IF WORK WILL EXTEND PAST THIS DATE, THE NEW RATE MUST BE PAID AND SHOULD BE INCORPORATED IN CONTRACTS ENTERED INTO NOW. CONTACT THE OFFICE OF THE DIRECTOR – RESEARCH UNIT FOR SPECIFIC RATES AT (415) 703-4774.
#	INDICATES AN APPRENTICEABLE CRAFT. THE CURRENT APPRENTICE WAGE RATES ARE AVAILABLE ON THE INTERNET @ HTTP://WWW.DIR.CA.GOV/OPRL/PWAPPWAGE/PWAPPWAGESTART.ASP. TO OBTAIN ANY APPRENTICE WAGE RATES AS OF JULY 1, 2008 AND PRIOR TO SEPTEMBER 27, 2012, PLEASE CONTACT THE DIVISION OF APPRENTICESHIP STANDARDS OR REFER TO THE DIVISION OF APPRENTICESHIP STANDARDS' WEBSITE AT HTTP://WWW.DIR.CA.GOV/DAS/DAS.HTML.
&	THE BASIC HOURLY RATE AND EMPLOYER PAYMENTS ARE NOT TAKEN FROM A COLLECTIVE BARGAINING AGREEMENT FOR THIS CRAFT OR CLASSIFICATION.
A	INCLUDES AMOUNT WITHHELD FOR DUES CHECK OFF.
B	AMOUNT INCLUDED IN FACTORING OVERTIME RATES.
C	INCLUDES AMOUNT FOR INDUSTRY PROMOTION FUND, INTERNATIONAL MASONRY INSTITUTE (IMI), AND LABOR MANAGEMENT COOPERATION COMMITTEE (LMCC)
D	SATURDAYS IN THE SAME WORK WEEK MAY BE WORKED AT STRAIGHT-TIME IF JOB IS SHUT DOWN DURING THE NORMAL WORKWEEK DUE TO INCLEMENT WEATHER.
E	RATE APPLIES TO THE FIRST 2 DAILY OVERTIME HOURS AND THE FIRST 10 HOURS ON SATURDAY; ALL OTHER TIME IS PAID AT THE SUNDAY AND HOLIDAY OVERTIME HOURLY RATE.
F	INCLUDED IN STRAIGHT-TIME HOURLY RATE.
G	RATE APPLIES TO THE FIRST 10 HOURS WORKED ON SATURDAY. ALL OTHER HOURS ARE PAID AT THE SUNDAY/HOLIDAY RATE.
H	INCLUDES AMOUNT FOR VAC/HOL AND DUES CHECK OFF.
I	IN THE EVENT A CREW ON A PROJECT IS PREVENTED FROM WORKING ON A REGULAR WEEK DAY DUE TO INCLEMENT WEATHER OR ACT OF GOD, THAT CREW WILL BE PERMITTED TO WORK ON THE FOLLOWING SATURDAY AT STRAIGHT TIME ON A VOLUNTARY BASIS.
J	RATE APPLIES TO THE FIRST 2 DAILY OVERTIME HOURS AND THE FIRST 8 HOURS ON SATURDAY ONLY; ALL OTHER TIME IS PAID AT THE SUNDAY AND HOLIDAY OVERTIME HOURLY RATE.
K	INCLUDED IN BASIC HOURLY RATE.
L	RATE APPLIES TO THE FIRST 4 DAILY OVERTIME HOURS AND THE FIRST 12 HOURS WORKED ON SATURDAY; ALL OTHER TIME IS PAID AT THE SUNDAY AND HOLIDAY OVERTIME HOURLY RATE.
M	IN ADDITION, AN AMOUNT EQUAL TO 3% OF THE BASIC HOURLY RATE IS ADDED TO THE TOTAL HOURLY RATE AND OVERTIME HOURLY RATES FOR THE NATIONAL EMPLOYEES BENEFIT BOARD.
N	IN ADDITION, AN AMOUNT EQUAL TO 0.5% OF THE BASIC HOURLY RATE, WHICH IS FACTORED AT THE APPLICABLE OVERTIME MULTIPLIER, IS ADDED TO THE TOTAL HOURLY RATE AND OVERTIME HOURLY RATES.
O	RATE APPLIES TO THE FIRST 4 DAILY OVERTIME HOURS AND THE FIRST 8 HOURS WORKED ON SATURDAY. ALL OTHER TIME IS PAID AT THE SUNDAY AND HOLIDAY OVERTIME RATE.
P	INCLUDES AMOUNT WITHHELD FOR WORKING DUES.
Q	IN ADDITION, AN AMOUNT EQUAL TO 3% OF THE BASIC HOURLY RATE IS ADDED TO THE TOTAL HOURLY RATE AND OVERTIME HOURLY RATES FOR THE NATIONAL EMPLOYEES BENEFIT BOARD. PURSUANT LABOR CODE SECTIONS 1773.1 AND 1773.8, THE AMOUNT PAID FOR THIS EMPLOYER PAYMENT MAY VARY RESULTING IN A LOWER TAXABLE BASIC HOURLY WAGE RATE, BUT THE TOTAL HOURLY RATES FOR STRAIGHT TIME AND OVERTIME MAY NOT BE LESS THAN THE GENERAL PREVAILING RATE OF PER DIEM WAGES.
R	INCLUDES AMOUNT EQUAL TO 0.5% OF THE HOURLY RATE FOR THE ADMINISTRATIVE MAINTENANCE FUND AND THE REMAINING AMOUNT IS FOR THE JOINT ELECTRICAL INDUSTRY FUND.
S	RATE APPLIES TO THE FIRST 2 DAILY OVERTIME HOURS UP TO A MAXIMUM OF 10 HOURS IN ANY ONE WEEK OR THE FIRST 8 HOURS WORKED ON SATURDAY IF NO OVERTIME HAS BEEN WORKED DURING WEEK. IF OVERTIME IS WORKED MONDAY THROUGH FRIDAY, SUBTRACT THAT AMOUNT OF TIME FROM THE TIME ALLOWED AT TIME AND ONE HALF (1 1/2) ON SATURDAY. ALL OTHER TIME IS PAID AT THE SUNDAY/HOLIDAY RATE.
T	THE MATERIAL HANDLER MAY BE UTILIZED IN CONJUNCTION WITH BOTH INSIDE AND LINE PROJECTS. THE RATIO OF MATERIAL HANDLER TO JOURNEYMEN SHALL BE ONE (1) MATERIAL HANDLER TO TH (3) JOURNEYMEN.
U	ALL CREWS, WITHOUT CONSIDERATION TO THE NUMBER OF INDIVIDUALS IN THE CREW, SHALL INCLUDE A CHIEF OF PARTY. A CREW CONSISTS OF ONE (1) OR MORE EMPLOYEES PERFORMING FIELD AND CONSTRUCTION SURVEY WORK.
V	INCLUDES AN AMOUNT PER HOUR WORKED FOR ANNUITY TRUST FUND.
W	INCLUDES AN AMOUNT PER HOUR WORKED FOR SUPPLEMENTAL DUES.
X	RATE APPLIES TO THE FIRST 4 DAILY OVERTIME HOURS, MONDAY THROUGH FRIDAY. ALL OTHER OVERTIME IS PAID AT THE SUNDAY/HOLIDAY RATE.
Y	RATE APPLIES TO THE FIRST 12 OVERTIME HOURS WORKED. ALL OTHER OVERTIME IS PAID AT THE SUNDAY/HOLIDAY RATE. IN THE EVENT IT IS NOT REASONABLY POSSIBLE TO COMPLETE 40 HOURS OF WORK ON AN 8 HOUR DAY, MONDAY THROUGH FRIDAY, THEN THE BALANCE OF THE 40 HOURS, UP TO 8 HOURS, MAY BE WORKED ON SATURDAY AT THE STRAIGHT-TIME RATE.
Z	INCLUDES AN AMOUNT PER HOUR WORKED FOR IUPAT, IARP, AND RETIREE PENSION.
AA	INCLUDES AMOUNTS FOR INDUSTRY FUND, WORK PRESERVATION FUND, AND LABOR MANAGEMENT COOPERATION INITIATIVE
AB	RATE APPLIES TO THE FIRST 2 DAILY OVERTIME HOURS AND FIRST 8 HOURS WORKED ON DESIGNATED DAYS OFF; ALL OTHER TIME IS PAID AT THE SATURDAY, SUNDAY AND HOLIDAY OVERTIME RATE.
AC	EMPLOYEES WORKING ON ANY SUSPENDED PLATFORM/SCAFFOLD SHALL BE PAID AN ADDITIONAL $15.00 PER DAY ABOVE THE WAGE RATE.
AD	INCLUDES AN AMOUNT FOR DUES CHECK-OFF AND VACATION/HOLIDAY WHICH ARE FACTORED INTO OVERTIME RATES.

DocuSign Envelope ID: 894511EA-295B-49EB-A393-D26A6837FDD4

AE RATE APPLIES TO FIRST 2 OVERTIME HOURS MONDAY THROUGH FRIDAY; ALL OTHER OVERTIME IS PAID AT THE DOUBLE TIME RATE.

AF DESIGNATED DAYS OFF SHALL BE PAID AT THE SATURDAY OVERTIME RATE; PLEASE REFER TO THE HOLIDAY PROVISIONS FOR A LIST OF DESIGNATED DAYS OFF.

AG INCLUDES AN AMOUNT FOR VACATION/DUES CHECK OFF WHICH IS NOT FACTORED IN THE OVERTIME RATES.

AH INCLUDED IN STRAIGHT-TIME HOURLY RATE WHICH IS NOT FACTORED IN THE OVERTIME RATES.

AI PLEASE NOTE THAT THE TAPER CLEAN-UP APPLIES ONLY TO THE TAPER CLASSIFICATION.

AJ INCLUDES AN AMOUNT WITHHELD FOR DUES CHECK OFF WHICH IS NOT FACTORED IN OVERTIME AND HOLIDAY WAGE RATES.

AK INCLUDES AN AMOUNT WITHHELD FOR DUES CHECKOFF WHICH IS NOT FACTORED IN OVERTIME AND HOLIDAY WAGE RATES. EMPLOYEES WORKING ON AND BEHIND PLASTER GUNS SHALL RECEIVE AN ADDITIONAL $5.00 PER DAY ABOVE THE WAGE RATE.

AL RATE APPLIES TO THE FIRST 8 HOURS WORKED; ALL OTHER TIME IS PAID AT THE SUNDAY AND HOLIDAY OVERTIME HOURLY RATE.

AM ALL HOD CARRIERS WORKING ON THE HOSE SHALL RECEIVE $5.00 PER DAY OVER SCALE.

AN INCLUDES AN AMOUNT FOR VACATION, DUES CHECK-OFF AND ORGANIZING DUES WHICH ARE NOT FACTORED INTO OVERTIME.

AO AMOUNT IS FOR INDUSTRY PROMOTION FUND.

AP RATE APPLIES TO THE FIRST 4 OVERTIME HOURS MONDAY THROUGH FRIDAY AND THE FIRST 8 HOURS WORKED ON SATURDAY. ALL OTHER TIME IS PAID AT THE SUNDAY AND HOLIDAY OVERTIME RATE.

AQ PURSUANT TO LABOR CODE SECTIONS 1773.1 AND 1773.8, THE AMOUNT PAID FOR THIS EMPLOYER PAYMENT MAY VARY RESULTING IN A LOWER TAXABLE BASIC HOURLY WAGE RATE, BUT THE TOTAL HOURLY RATES FOR STRAIGHT TIME AND OVERTIME MAY NOT BE LESS THAN THE GENERAL PREVAILING RATE OF PER DIEM WAGES.

AR THERE MUST BE AT LEAST ONE JOURNEYMAN PIPEFITTER PER CONTRACTOR ON EACH JOBSITE.

AS THERE SHALL BE NO MORE THAN THREE TRADESMEN TO EVERY TWO JOURNEYMAN PIPEFITTER/ASSISTANT JOURNEYMAN PIPEFITTER COMBINATION EMPLOYED PER CONTRACTOR ON EACH JOBSITE.

AT THERE SHALL BE NO MORE THAN FOUR TRADESMEN TO EVERY TWO JOURNEYMAN PIPEFITTER/ASSISTANT JOURNEYMAN PIPEFITTER COMBINATION EMPLOYED PER CONTRACTOR ON EACH JOBSITE. MAINTENANCE WORK, BOTH DURING AND AFTER THE PLANT ESTABLISHMENT PERIOD, MAY BE PERFORMED BY LANDSCAPE TRADESMEN WITHOUT THE SUPERVISION OF A JOURNEYMAN PIPEFITTER.

AU INCLUDES AN AMOUNT FOR HEALTH AND WELFARE EXTENDED RESERVE WHICH IS FACTORED AT THE APPLICABLE OVERTIME MULTIPLIER. PURSUANT TO LABOR CODE SECTIONS 1773.1 AND 1773.8, THE AMOUNT PAID FOR THIS EMPLOYER PAYMENT MAY VARY RESULTING IN A LOWER TAXABLE BASIC HOURLY WAGE RATE, BUT THE TOTAL HOURLY RATES FOR STRAIGHT TIME AND OVERTIME MAY NOT BE LESS THAN THE GENERAL PREVAILING RATE OF PER DIEM WAGES.

AV INCLUDES AN AMOUNT FOR 401A-PART B PENSION WHICH IS FACTORED AT THE APPLICABLE OVERTIME MULTIPLIER. PURSUANT TO LABOR CODE SECTIONS 1773.1 AND 1773.8, THE AMOUNT PAID FOR THIS EMPLOYER PAYMENT MAY VARY RESULTING IN A LOWER TAXABLE BASIC HOURLY WAGE RATE, BUT THE TOTAL HOURLY RATES FOR STRAIGHT TIME AND OVERTIME MAY NOT BE LESS THAN THE GENE PREVAILING RATE OF PER DIEM WAGES.

AW $0.50 TO SUPPLEMENTAL UNEMPLOYMENT.

AX APPLIES TO THE FOLLOWING HOLIDAYS: NEW YEARS DAY, LABOR DAY, THANKSGIVING DAY, AND CHRISTMAS DAY. ALL OTHER HOLIDAYS USE THE SATURDAY OVERTIME RATE.

AY AMOUNT IS FOR CONTRACT ADMINISTRATION

AZ SATURDAY MAY BE PAID AT STRAIGHT TIME IF THE WORK WEEK IS TUESDAY THROUGH SATURDAY.

BA RATE APPLIES TO THE FIRST 2 OVERTIME HOURS ONLY; ALL OTHER TIME IS PAID AT THE SUNDAY AND HOLIDAY OVERTIME HOURLY RATE.

BB IN THE EVENT THAT CONDITIONS ON ONE OR MORE DAYS DURING THE REGULAR WORK WEEK PREVENT EMPLOYEES FROM WORKING ON SCHEDULED WORK DURING SUCH WEEK, WORK MAY BE PERFORMED ON SATURDAY AT STRAIGHT TIME RATES OF PAY.

BC INCLUDES SMOHIT AND SHC. EFFECTIVE 1/1/2013, PURSUANT TO LABOR CODE SECTIONS 1773.1 AND 1773.8, THE AMOUNT PAID FOR THIS EMPLOYER PAYMENT MAY VARY RESULTING IN A LOWER TAXABLE BASIC HOURLY WAGE RATE, BUT THE TOTAL HOURLY RATES FOR STRAIGHT TIME AND OVERTIME MAY NOT BE LESS THAN THE GENERAL PREVAILING RATE OF PER DIEM WAGES.

BD INCLUDES SHC. EFFECTIVE 1/1/2013, PURSUANT TO LABOR CODE SECTIONS 1773.1 AND 1773.8, THE AMOUNT PAID FOR THIS EMPLOYER PAYMENT MAY VARY RESULTING IN A LOWER TAXABLE BASIC HOURLY WAGE RATE, BUT THE TOTAL HOURLY RATES FOR STRAIGHT TIME AND OVERTIME MAY NOT BE LESS THAN THE GENERAL PREVAILING RATE OF PER DIEM WAGES.

BE RATE APPLIES TO FIRST 4 DAILY OVERTIME HOURS AND THE FIRST 8 HOURS WORKED ON SATURDAY DURING THE EMPLOYEES NORMAL WORKING HOURS. ALL OTHER OVERTIME HOURS SHALL BE PAID AT THE SUNDAY AND HOLIDAY DOUBLE TIME RATE.

BF INCLUDES $0.03 FOR SCHOLAR FUND.

BG THE RATIO OF TERRAZZO FINISHER HOURS TO TERRAZZO WORKER HOURS SHALL NOT EXCEED TWO (2) TO ONE (1).

BH INCLUDES AMOUNT WITHHELD FOR DUES CHECK OFF, WHICH IS FACTORED IN THE OVERTIME RATES. ANY EMPLOYEE WORKING UNDERGROUND SHALL RECEIVE $1.00 PER HOUR IN ADDITION TO REGULAR WAGES.

BI RATE APPLIES TO FIRST YEAR OF EMPLOYMENT ONLY; $0.88 AFTER 2 YEARS OF EMPLOYMENT.

BJ RATE APPLIES TO ALL TIME WORKED IN EXCESS OF 8 HOURS PER DAY OR 40 HOURS PER WEEK AND FOR ALL HOURS ON SUNDAYS AND HOLIDAYS. RATE DOES NOT INCLUDE ANY ADDITIONAL AMOUNT THAT MAY BE REQUIRED FOR VACATION/HOLIDAY PAYMENT.

BK RATE APPLIES TO FIRST YEAR OF EMPLOYMENT ONLY; $0.72 AFTER 2 YEARS OF EMPLOYMENT.

DocuSign Envelope ID: 894511EA-295B-49EB-A393-D26A6837FDD4

GENERAL PREVAILING WAGE DETERMINATION MADE BY THE DIRECTOR OF INDUSTRIAL RELATIONS
PURSUANT TO CALIFORNIA LABOR CODE PART 7, CHAPTER 1, ARTICLE 2, SECTIONS 1770, 1773 AND 1773.1

LOCALITY: SANTA CLARA COUNTY

DETERMINATION: STC-2014-2

RECOGNIZED HOLIDAYS: HOLIDAYS UPON WHICH THE GENERAL PREVAILING HOURLY WAGE RATE FOR HOLIDAY WORK SHALL BE PAID, SHALL BE ALL HOLIDAYS IN THE COLLECTIVE BARGAINING AGREEMEN APPLICABLE TO THE PARTICULAR CRAFT, CLASSIFICATION, OR TYPE OF WORKER EMPLOYED ON THE PROJECT, WHICH IS ON FILE WITH THE DIRECTOR OF INDUSTRIAL RELATIONS. IF THE PREVAIL RATE IS NOT BASED ON A COLLECTIVELY BARGAINED RATE, THE HOLIDAYS UPON WHICH THE PREVAILING RATE SHALL BE PAID SHALL BE AS PROVIDED IN SECTION 6700 OF THE GOVERNMENT CODE. YOU MAY OBTAIN THE HOLIDAY PROVISIONS FOR THE CURRENT DETERMINATIONS ON THE INTERNET AT HTTP://WWW.DIR.CA.GOV/OPRL/PWD. HOLIDAY PROVISIONS FOR CURRENT OR SUPERSEDED DETERMINATIONS MAY BE OBTAINED BY CONTACTING THE OFFICE OF THE DIRECTOR - RESEARCH UNIT AT (415) 703-4774.

DocuSign Envelope ID: 894511EA-295B-49EB-A393-D26A6837FDD4

GENERAL PREVAILING WAGE DETERMINATION MADE BY THE DIRECTOR OF INDUSTRIAL RELATIONS

PURSUANT TO CALIFORNIA LABOR CODE PART 7, CHAPTER 1, ARTICLE 2, SECTIONS 1770, 1773 AND 1773.1

FOR COMMERCIAL BUILDING, HIGHWAY, HEAVY CONSTRUCTION AND DREDGING PROJECTS

LOCALITY: SANTA CLARA COUNTY

DETERMINATION: STC-2014-2

				INCREASE 1		INCREASE 2		INCREASE 3		INCREASE 4		INCREASE 5		INCREASE 6	
	CRAFT (JOURNEY LEVEL)	ISSUE DATE	EXPIRATION DATE	DATE OF NEXT CHANGE	AMOUNT OF INCREASE	DATE OF NEXT CHANGE	AMOUNT OF INCREAS	DATE OF NEXT CHANGE	AMOUNT OF INCREASE	DATE OF NEXT CHANGE	AMOUNT OF INCREASE	DATE OF NEXT CHANGE	AMOUNT OF INCREASE	DATE OF NEXT CHANGE	AMOUNT OF INCREASE
	PLASTERER	8/22/2014	06/30/2015**	7/1/2015	$1.85 A	7/1/2016	$1.90 A								
B	**PLASTER TENDER**	8/22/2014	06/30/2015**	7/1/2015	$1.05 C										
	PLUMBER:														
	UNDERGROUND UTILITY PIPEFITTER	8/22/2014	06/30/2015**	7/1/2015	$0.85 D	7/1/2016	$0.80 E								
	LANDSCAPE PIPEFITTER	8/22/2014	06/30/2015**	7/1/2015	$0.85 D	7/1/2016	$0.80 E								
F	UNDERGROUND UTILITY ASSISTANT JOURNEYMAN	8/22/2014	06/30/2015**	7/1/2015	$0.85 D	7/1/2016	$0.80 E								
F	LANDSCAPE ASSISTANT JOURNEYMAN	8/22/2014	06/30/2015**	7/1/2015	$0.85 D	7/1/2016	$0.80 E								
G	UNDERGROUND UTILITY TRADESMAN	8/22/2014	06/30/2015**	7/1/2015	$0.85 D	7/1/2016	$0.80 E								
H	LANDSCAPE TRADESMAN I	8/22/2014	06/30/2015**	7/1/2015	$0.85 D	7/1/2016	$0.80 E								
H	LANDSCAPE TRADESMAN II	8/22/2014	06/30/2015**	7/1/2015	$0.85 D	7/1/2016	$0.80 E								
I	**TERRAZZO FINISHER**	8/22/2014	06/30/2015**	7/1/2015	$0.75 A	7/1/2016	$1.00 A	7/1/2017	$1.00 A	7/1/2018	$1.25 A				
I	**TERRAZZO WORKER**	8/22/2014	06/30/2015**	7/1/2015	$1.25 A	7/1/2016	$1.50 A	7/1/2017	$1.75 A	7/1/2018	$2.00 A				
	TILE FINISHER	8/22/2014	03/31/2015**	4/1/2015	$1.14 A										
	RED CIRCLED FINISHER	8/22/2014	03/31/2015**	4/1/2015	$1.14 A										
	TILE SETTER	8/22/2014	03/31/2015**	4/1/2015	$1.75 A										

FOOTNOTES

DocuSign Envelope ID: 894511EA-295B-49EB-A393-D26A6837FDD4

INCREASE 7	
DATE OF NEXT CHANGE	AMOUNT OF INCREASE

DocuSign Envelope ID: 894511EA-295B-49EB-A393-D26A6837FDD4

GENERAL PREVAILING WAGE DETERMINATION MADE BY THE DIRECTOR OF INDUSTRIAL RELATIONS

PURSUANT TO CALIFORNIA LABOR CODE PART 7, CHAPTER 1, ARTICLE 2, SECTIONS 1770, 1773 AND 1773.1

LOCALITY: SANTA CLARA COUNTY

DETERMINATION: STC-2014-2

A THE PREDETERMINED INCREASE SHOWN IS TO BE ALLOCATED TO WAGES AND/OR EMPLOYER PAYMENTS. PLEASE CONTACT THE OFFICE OF THE DIRECTOR - RESEARCH UNIT AT (415) 703-4774 WHEN THE PREDETERMINED INCREASE BECOMES DUE TO CONFIRM THE DISTRIBUTION. PLEASE ALSO EXAMINE THE IMPORTANT NOTICES TO SEE IF ANY MODIFICATIONS HAVE BEEN ISSUED, AS THERE MAY BE REDUCTIONS TO PREDETERMINED INCREASES.

B ALL HOD CARRIERS WORKING ON THE HOSE SHALL RECEIVE $5.00 PER DAY OVER SCALE.

C $0.80 TO PENSION AND $0.25 TO HEALTH AND WELFARE

D $0.05 TO THE BASIC HOURLY RATE AND $0.80 TO HEALTH AND WELFARE

E $0.10 TO THE BASIC HOURLY RATE, $0.60 TO HEALTH AND WELFARE, AND $0.10 TO VACATION

F THERE MUST BE AT LEAST ONE JOURNEYMAN PIPEFITTER PER CONTRACTOR ON EACH JOBSITE.

G THERE SHALL BE NO MORE THAN THREE TRADESMEN TO EVERY TWO JOURNEYMAN PIPEFITTER/ASSISTANT JOURNEYMAN PIPEFITTER COMBINATION EMPLOYED PER CONTRACTOR ON EACH JOBSITE.

H THERE SHALL BE NO MORE THAN FOUR TRADESMEN TO EVERY TWO JOURNEYMAN PIPEFITTER/ASSISTANT JOURNEYMAN PIPEFITTER COMBINATION EMPLOYED PER CONTRACTOR ON EACH JOBSITE. MAINTENANCE WORK, BOTH DURING AND AFTER THE PLANT ESTABLISHMENT PERIOD, MAY BE PERFORMED BY LANDSCAPE TRADESMEN WITHOUT THE SUPERVISION OF A JOURNEYMAN PIPEFITTER.

I THE RATIO OF TERRAZZO FINISHER HOURS TO TERRAZZO WORKER HOURS SHALL NOT EXCEED TWO (2) TO ONE (1).

STC-2014-2-INC

DocuSign Envelope ID: 894511EA-295B-49EB-A393-D26A6837FDD4

GENERAL PREVAILING WAGE DETERMINATION MADE BY THE DIRECTOR OF INDUSTRIAL RELATIONS
PURSUANT TO CALIFORNIA LABOR CODE PART 7, CHAPTER 1, ARTICLE 2, SECTIONS 1770, 1773 AND 1773.1
FOR COMMERCIAL BUILDING, HIGHWAY, HEAVY CONSTRUCTION AND DREDGING PROJECTS

LOCALITY: SOLANO COUNTY
DETERMINATION: SOL-2014-2

				EMPLOYER PAYMENTS						STRAIGHT-TIME		OVERTIME HOURLY RATE		
	CRAFT (JOURNEY LEVEL)	ISSUE DATE	EXPIRATION DATE	BASIC HOURLY RATE	HEALTH AND WELFARE	PENSION	VACATION/ HOLIDAY	TRAINING	OTHER PAYMENTS	HOURS	TOTAL HOURLY RATE	DAILY	SATURDAY	SUNDAY AND HOLIDAY
#	**BRICKLAYER, BLOCKLAYER:**													
	BRICKLAYER, BLOCKLAYER, STONEMASON	8/22/2013	04/30/2014*	A 36.560	9.690	13.300	B 3.400	0.800	C 1.250	D 8.0	65.000	E 84.980	E 84.980	104.960
	POINTER, CLEANER, CAULKER, WATERPROOFER	8/22/2014	06/30/2015*	A 42.080	9.690	10.520	F -	1.440	0.400	D 8.0	64.130	85.170	G 85.170	106.210
#	**BRICK TENDER**	8/22/2014	06/30/2015*	H 32.270	6.840	10.130	F -	0.410	-	D 8.0	49.650	E 65.790	E 65.790	81.920
#	**CARPET, LINOLEUM,**													
	SOFT FLOOR LAYER	8/22/2014	06/30/2015*	A 44.820	9.700	8.050	I -	0.530	0.340	8.0	63.440	J 85.850	J 85.850	108.260
	FLOOR COVERING HANDLER AFTER 3 YEARS	8/22/2014	06/30/2015*	A 22.390	9.700	4.030	I -	0.050	0.340	8.0	36.510	J 47.700	J 47.700	58.900
	FLOOR COVERING HANDLER LESS THAN 3 YEARS	8/22/2014	06/30/2015*	A 17.900	9.700	3.220	I -	0.050	0.340	8.0	31.210	J 40.160	J 40.160	49.110
	FLOOR COVERING HANDLER TRAINEE, FIRST 3 MONTHS	8/22/2014	06/30/2015*	A 14.310	9.700	2.580	I -	0.050	0.340	8.0	26.980	J 34.140	J 34.140	41.290
	FLOOR COVERING HANDLER TRAINEE, SECOND 3 MONTHS	8/22/2014	06/30/2015*	A 16.110	9.700	2.900	I -	0.050	0.340	8.0	29.100	J 37.160	J 37.160	45.210
#	**ELECTRICIAN:**													
	COMM & SYSTEM INSTALLER	2/22/2014	11/30/2014*	31.320	9.550	K 4.650	-	1.100	L 0.210	8.0	47.930	M 64.140	M 64.140	80.350
	COMM & SYSTEM TECH.	2/22/2014	11/30/2014*	35.660	9.550	K 4.650	-	1.100	L 0.210	8.0	52.420	M 70.870	M 70.870	89.330
	INSIDE WIREMAN, TECHNICIAN	8/22/2014	05/31/2015*	A 45.260	N 12.950	O 6.300	-	0.880	P 1.050	8.0	67.990	E 91.820	E 91.820	115.660
	CABLE SPLICER	8/22/2014	05/31/2015*	A 50.920	N 12.950	O 6.300	-	0.880	P 1.190	8.0	73.960	E 100.780	E 100.780	127.600
#	**FIELD SURVEYOR:**													
Q	CHIEF OF PARTY	2/22/2014	02/28/2015*	37.290	12.530	R 10.000	S 3.380	0.720	0.160	8.0	64.080	T 82.720	U 82.720	101.370
Q	INSTRUMENTMAN	2/22/2014	02/28/2015*	34.200	12.530	R 10.000	S 3.380	0.720	0.160	8.0	60.990	T 78.090	U 78.090	95.190
Q	CHAINMAN/RODMAN	2/22/2014	02/28/2015*	31.320	12.530	R 10.000	S 3.380	0.720	0.160	8.0	58.110	T 73.770	U 73.770	89.430
# V	**GLAZIER**	8/22/2014	06/30/2015*	A 41.830	9.700	W 12.140	-	0.500	X 0.380	8.0	64.550	Y 85.470	106.380	106.380
# Z	GLAZIER	8/22/2014	06/30/2015*	A 32.190	9.700	AA 10.390	-	0.540	X 0.380	8.0	53.200	Y 69.290	85.390	85.390
# AB	**MARBLE FINISHER**	8/22/2013	07/31/2014*	AC 28.050	9.690	3.870	I -	0.450	0.530	8.0	42.590	AD 56.610	70.640	70.640
# AB	**MARBLE MASON**	8/22/2013	07/31/2014*	AC 39.300	9.690	11.990	I -	0.800	0.730	8.0	62.510	AD 82.160	101.810	101.810
#	**PAINTER:**													
	BRUSH AND SPRAY	2/22/2014	06/30/2014*	H 34.830	9.700	R 10.680	I -	0.410	0.380	D 8.0	56.000	73.420	AE 73.420	90.830
	INDUSTRIAL PAINTER	2/22/2014	06/30/2014*	H 35.080	9.700	R 10.680	I -	0.410	0.380	D 8.0	56.250	73.790	AE 73.790	91.330
	SANDBLASTER, STEAM CLEANER, WATERBLASTER	2/22/2014	06/30/2014*	H 35.330	9.700	R 10.680	I -	0.410	0.380	D 8.0	56.500	74.170	AE 74.170	91.830
	EXOTIC MATERIALS	2/22/2014	06/30/2014*	H 35.580	9.700	R 10.680	I -	0.410	0.380	D 8.0	56.750	74.540	AE 74.540	92.330
	PAPERHANGER/WALLCOVERING	2/22/2014	06/30/2014*	H 35.830	9.700	R 10.680	I -	0.410	0.380	D 8.0	57.000	74.920	AE 74.920	92.830
	TAPER	8/22/2014	06/30/2015*	AF 40.320	9.700	10.540	AG -	0.360	0.290	8.0	61.210	77.910	D 77.910	AE 94.620
AH	TAPER CLEAN-UP	8/22/2014	06/30/2015*	AI 16.100	9.700	-	-	-	-	8.0	25.800	33.360	D 33.360	AE 40.920
#	**PLASTERER**	8/22/2014	06/30/2015**	AJ 30.090	12.530	8.680	3.000	1.050	1.000	8.0	56.350	70.550	AK 70.550	84.760
#	**PLASTER TENDER**	8/22/2014	06/30/2015*	29.620	6.840	9.450	2.630	0.410	AL 0.030	8.0	48.980	J 63.790	J 63.790	78.600
#	**PLUMBER:**													
	PLUMBER, STEAMFITTER, REFRIGERATION FITTER (HVAC)	8/22/2014	06/30/2015**	AM 48.000	15.100	N 13.650	-	1.300	0.740	8.0	78.790	E 102.790	E 102.790	126.790
	PLUMBER LIGHT COMMERCIAL FOR TOTAL PLUMBING BID OF $250,000 OR LESS	8/22/2014	12/31/2014**	AM 30.600	10.700	N 7.800	-	0.900	0.490	D 8.0	50.490	E 65.790	E 65.790	81.090
	UNDERGROUND UTILITY PIPEFITTER	8/22/2014	06/30/2015**	26.550	5.800	N 3.000	2.000	0.450	0.600	D 8.0	38.400	51.670	51.670	64.950
	LANDSCAPE PIPEFITTER	8/22/2014	06/30/2015**	26.550	5.800	N 3.000	2.000	0.450	0.600	D 8.0	38.400	51.670	51.670	64.950
AN	UNDERGROUND UTILITY ASSISTANT JOURNEYMAN	8/22/2014	06/30/2015**	15.550	5.800	N 3.000	2.000	0.450	0.600	D 8.0	27.400	35.170	35.170	42.950
AN	LANDSCAPE ASSISTANT JOURNEYMAN	8/22/2014	06/30/2015**	15.550	5.800	N 3.000	2.000	0.450	0.600	D 8.0	27.400	35.170	35.170	42.950
AO	UNDERGROUND UTILITY TRADESMAN	8/22/2014	06/30/2015**	10.850	5.800	N 3.000	2.000	0.450	0.600	D 8.0	22.700	28.130	28.130	33.550

DocuSign Envelope ID: 894511EA-295B-49EB-A393-D26A6837FDD4

GENERAL PREVAILING WAGE DETERMINATION MADE BY THE DIRECTOR OF INDUSTRIAL RELATIONS
PURSUANT TO CALIFORNIA LABOR CODE PART 7, CHAPTER 1, ARTICLE 2, SECTIONS 1770, 1773 AND 1773.1
FOR COMMERCIAL BUILDING, HIGHWAY, HEAVY CONSTRUCTION AND DREDGING PROJECTS

LOCALITY: SOLANO COUNTY
DETERMINATION: SOL-2014-2

				EMPLOYER PAYMENTS						STRAIGHT-TIME		OVERTIME HOURLY RATE		
	CRAFT (JOURNEY LEVEL)	ISSUE DATE	EXPIRATION DATE	BASIC HOURLY RATE	HEALTH AND WELFARE	PENSION	VACATION/ HOLIDAY	TRAINING	OTHER PAYMENTS	HOURS	TOTAL HOURLY RATE	DAILY	SATURDAY	SUNDAY AND HOLIDAY
AP	LANDSCAPE TRADESMAN I	8/22/2014	06/30/2015**	10.500	5.800	N -	2.000	0.450	0.600	D 8.0	19.350	24.600	24.600	29.850
AP	LANDSCAPE TRADESMAN II	8/22/2014	06/30/2015**	10.850	5.800	N 3.000	2.000	0.450	0.600	D 8.0	22.700	28.130	28.130	33.550
	SPRINKLER FITTER (FIRE PROTECTION AND FIRE CONTROL SYSTEMS)	2/22/2014	07/31/2014*	A 52.420	8.770	15.500	F -	1.100	0.400	8.0	78.190	104.400	104.400	130.610
#	**ROOFER**	8/22/2014	07/31/2015*	31.550	8.140	5.230	3.510	0.550	0.440	D 8.0	49.420	J 65.190	J 65.190	80.970
	BITUMASTIC, ENAMELER, PIPE WRAPPER, COAL TAR PITCH BUILD-UP	8/22/2014	07/31/2015*	33.550	8.140	5.230	3.510	0.550	0.440	D 8.0	51.420	J 68.190	J 68.190	84.970
	MASTIC WORKER, KETTLEMAN	8/22/2014	07/31/2015*	31.800	8.140	5.230	3.510	0.550	0.440	D 8.0	49.670	J 65.570	J 65.570	81.470
#	**SHEET METAL WORKER**	8/22/2014	06/30/2015*	H 54.850	AQ 13.110	N 21.120	F -	1.410	1.150	8.0	91.640	AR 119.060	AR 119.060	146.490
	TOTAL SHEET METAL CONTRACT OF $200,000 OR LESS	8/22/2014	06/30/2015*	H 48.790	AQ 13.110	N 20.500	F -	1.410	1.150	8.0	84.960	AR 109.350	AR 109.350	133.750
	SERVICE MECHANIC (TOTAL SHEET METAL CONTRACT OF $200,000 OR LESS)	8/22/2014	06/30/2015*	H 35.840	AS 12.590	N 13.060	F -	1.310	1.150	8.0	63.950	AT 81.870	AT 81.870	99.790
	SERVICE TECHNICIAN (TOTAL SHEET METAL CONTRACT OF $200,000 OR LESS)	8/22/2014	06/30/2015*	H 31.550	AS 12.590	N 8.930	F -	1.310	1.150	8.0	55.530	AT 71.300	AT 71.300	87.080
	AIR CONDITIONING SPECIALIST (TOTAL SHEET METAL CONTRACT OF $200,000 OR LESS)	8/22/2014	06/30/2015*	H 28.320	AS 12.590	N 3.770	F -	1.290	1.150	8.0	47.120	AR 61.280	AR 61.280	75.440
	AIR CONDITIONING JOURNEYMAN (TOTAL SHEET METAL CONTRACT OF $200,000 OR LESS)	8/22/2014	06/30/2015*	H 33.130	AQ 12.610	N 8.770	F -	1.290	1.150	8.0	56.950	AR 73.510	AR 73.510	90.080
	METAL DECK & SIDING	8/22/2014	12/31/2014*	H 33.860	N 13.530	18.000	F -	AU 0.300	-	8.0	65.690	AR 82.620	AR 82.620	99.550
# AV	**TERRAZZO FINISHER**	8/22/2014	06/30/2015**	AF 33.190	9.690	5.120	F -	0.800	0.490	8.0	49.290	AR 63.780	AR 63.780	78.280
# AV	**TERRAZZO WORKER**	8/22/2014	06/30/2015**	AF 40.420	9.690	14.420	F -	0.800	0.670	8.0	66.000	AR 83.540	AR 83.540	101.080
#	**TILE FINISHER**	8/22/2014	03/31/2015**	AW 22.060	8.530	3.440	0.700	0.400	1.090	8.0	36.220	47.250	D 47.250	58.280
	RED CIRCLED FINISHER	8/22/2014	03/31/2015**	AW 27.750	8.530	3.670	1.300	0.300	1.100	8.0	42.650	56.530	D 56.530	70.400
#	**TILE SETTER**	8/22/2014	03/31/2015**	AW 38.240	8.530	4.670	2.350	0.590	1.680	8.0	56.060	75.180	D 75.180	94.300
	WATER WELL DRILLER													
	DRILLER, PUMP REPAIRMAN	8/22/2007	01/31/2008*	20.170	8.120	3.690	AX 0.800	-	-	8.0	32.780	AY 42.870	AY 42.870	AY 42.870
	PUMP INSTALLER	8/22/2007	01/31/2008*	17.860	8.120	3.690	AZ 0.720	-	-	8.0	30.390	AY 39.320	AY 39.320	AY 39.320
	HELPER	8/22/2007	01/31/2008*	12.470	8.120	3.690	BA 0.530	-	-	8.0	24.810	AY 31.040	AY 31.040	AY 31.040

FOOTNOTES

DocuSign Envelope ID: 894511EA-295B-49EB-A393-D26A6837FDD4

GENERAL PREVAILING WAGE DETERMINATION MADE BY THE DIRECTOR OF INDUSTRIAL RELATIONS
PURSUANT TO CALIFORNIA LABOR CODE PART 7, CHAPTER 1, ARTICLE 2, SECTIONS 1770, 1773 AND 1773.1

LOCALITY: SOLANO COUNTY

DETERMINATION: SOL-2014-2

*	EFFECTIVE UNTIL SUPERSEDED BY A NEW DETERMINATION ISSUED BY THE DIRECTOR OF INDUSTRIAL RELATIONS. CONTACT THE OFFICE OF THE DIRECTOR – RESEARCH UNIT AT (415) 703-4774 FOR THE NEW RATES AFTER TEN DAYS AFTER THE EXPIRATION DATE IF NO SUBSEQUENT DETERMINATION IS ISSUED.
**	THE RATE TO BE PAID FOR WORK PERFORMED AFTER THIS DATE HAS BEEN DETERMINED. IF WORK WILL EXTEND PAST THIS DATE, THE NEW RATE MUST BE PAID AND SHOULD BE INCORPORATED IN CONTRACTS ENTERED INTO NOW. CONTACT THE OFFICE OF THE DIRECTOR – RESEARCH UNIT FOR SPECIFIC RATES AT (415) 703-4774.
#	INDICATES AN APPRENTICEABLE CRAFT. THE CURRENT APPRENTICE WAGE RATES ARE AVAILABLE ON THE INTERNET @ HTTP://WWW.DIR.CA.GOV/OPRL/PWAPPWAGE/PWAPPWAGESTART.ASP. TO OBTAIN ANY APPRENTICE WAGE RATES AS OF JULY 1, 2008 AND PRIOR TO SEPTEMBER 27, 2012, PLEASE CONTACT THE DIVISION OF APPRENTICESHIP STANDARDS OR REFER TO THE DIVISION OF APPRENTICESHIP STANDARDS' WEBSITE AT HTTP://WWW.DIR.CA.GOV/DAS/DAS.HTML.
&	THE BASIC HOURLY RATE AND EMPLOYER PAYMENTS ARE NOT TAKEN FROM A COLLECTIVE BARGAINING AGREEMENT FOR THIS CRAFT OR CLASSIFICATION.
A	INCLUDES AMOUNT WITHHELD FOR DUES CHECK OFF.
B	AMOUNT INCLUDED IN FACTORING OVERTIME RATES.
C	INCLUDES AMOUNT FOR INDUSTRY PROMOTION FUND, INTERNATIONAL MASONRY INSTITUTE (IMI), AND LABOR MANAGEMENT COOPERATION COMMITTEE (LMCC)
D	SATURDAYS IN THE SAME WORK WEEK MAY BE WORKED AT STRAIGHT-TIME IF JOB IS SHUT DOWN DURING THE NORMAL WORKWEEK DUE TO INCLEMENT WEATHER.
E	RATE APPLIES TO THE FIRST 2 DAILY OVERTIME HOURS AND THE FIRST 10 HOURS ON SATURDAY; ALL OTHER TIME IS PAID AT THE SUNDAY AND HOLIDAY OVERTIME HOURLY RATE.
F	INCLUDED IN STRAIGHT-TIME HOURLY RATE.
G	RATE APPLIES TO THE FIRST 10 HOURS WORKED ON SATURDAY. ALL OTHER HOURS ARE PAID AT THE SUNDAY/HOLIDAY RATE.
H	INCLUDES AMOUNT FOR VAC/HOL AND DUES CHECK OFF.
I	INCLUDED IN BASIC HOURLY RATE.
J	RATE APPLIES TO THE FIRST 4 DAILY OVERTIME HOURS AND THE FIRST 12 HOURS WORKED ON SATURDAY; ALL OTHER TIME IS PAID AT THE SUNDAY AND HOLIDAY OVERTIME HOURLY RATE.
K	IN ADDITION, AN AMOUNT EQUAL TO 3% OF THE BASIC HOURLY RATE IS ADDED TO THE TOTAL HOURLY RATE AND OVERTIME HOURLY RATES FOR THE NATIONAL EMPLOYEES BENEFIT BOARD.
L	IN ADDITION, AN AMOUNT EQUAL TO 0.5% OF THE BASIC HOURLY RATE, WHICH IS FACTORED AT THE APPLICABLE OVERTIME MULTIPLIER, IS ADDED TO THE TOTAL HOURLY RATE AND OVERTIME HOURLY RATES.
M	RATE APPLIES TO THE FIRST 4 DAILY OVERTIME HOURS AND THE FIRST 8 HOURS WORKED ON SATURDAY. ALL OTHER TIME IS PAID AT THE SUNDAY AND HOLIDAY OVERTIME RATE.
N	PURSUANT TO LABOR CODE SECTIONS 1773.1 AND 1773.8, THE AMOUNT PAID FOR THIS EMPLOYER PAYMENT MAY VARY RESULTING IN A LOWER TAXABLE BASIC HOURLY WAGE RATE, BUT THE TOTAL HOURLY RATES FOR STRAIGHT TIME AND OVERTIME MAY NOT BE LESS THAN THE GENERAL PREVAILING RATE OF PER DIEM WAGES.
O	IN ADDITION, AN AMOUNT EQUAL TO 3% OF THE BASIC HOURLY RATE IS ADDED TO THE TOTAL HOURLY RATE AND OVERTIME HOURLY RATES FOR THE NATIONAL EMPLOYEES BENEFIT BOARD. PURSUANT TO LABOR CODE SECTIONS 1773.1 AND 1773.8, THE AMOUNT PAID FOR THIS EMPLOYER PAYMENT MAY VARY RESULTING IN A LOWER TAXABLE BASIC HOURLY WAGE RATE, BUT THE TOTAL HOURLY RATES FOR STRAIGHT TIME AND OVERTIME MAY NOT BE LESS THAN THE GENERAL PREVAILING RATE OF PER DIEM WAGES.
P	IN ADDITION TO THE AMOUNT SHOWN, WHICH IS FACTORED AT THE APPLICABLE OVERTIME MULTIPLIER FOR EACH OVERTIME HOUR, $0.19 IS ADDED TO THE TOTAL HOURLY RATE AND OVERTIME HOURLY RATES FOR THE LABOR MANAGEMENT COOPERATION COMMITTEE FUND.
Q	ALL CREWS, WITHOUT CONSIDERATION TO THE NUMBER OF INDIVIDUALS IN THE CREW, SHALL INCLUDE A CHIEF OF PARTY. A CREW CONSISTS OF ONE (1) OR MORE EMPLOYEES PERFORMING FIELD AND CONSTRUCTION SURVEY WORK.
R	INCLUDES AN AMOUNT PER HOUR WORKED FOR ANNUITY TRUST FUND.
S	INCLUDES AN AMOUNT PER HOUR WORKED FOR SUPPLEMENTAL DUES.
T	RATE APPLIES TO THE FIRST 4 DAILY OVERTIME HOURS, MONDAY THROUGH FRIDAY. ALL OTHER OVERTIME IS PAID AT THE SUNDAY/HOLIDAY RATE.
U	RATE APPLIES TO THE FIRST 12 OVERTIME HOURS WORKED. ALL OTHER OVERTIME IS PAID AT THE SUNDAY/HOLIDAY RATE. IN THE EVENT IT IS NOT REASONABLY POSSIBLE TO COMPLETE 40 HOURS OF WORK ON AN 8 HOUR DAY, MONDAY THROUGH FRIDAY, THEN THE BALANCE OF THE 40 HOURS, UP TO 8 HOURS, MAY BE WORKED ON SATURDAY AT THE STRAIGHT-TIME RATE.
V	RATE APPLIES TO REMAINDER OF SOLANO COUNTY, EXCEPT THE FOLLOWING CITIES: DIXON, EL MIRA, RIO VISTA, AND VACAVILLE.
W	INCLUDES AN AMOUNT PER HOUR WORKED FOR IUPAT, IARP, AND RETIREE PENSION.
X	INCLUDES AMOUNTS FOR INDUSTRY FUND, WORK PRESERVATION FUND, AND LABOR MANAGEMENT COOPERATION INITIATIVE
Y	RATE APPLIES TO THE FIRST 2 DAILY OVERTIME HOURS AND FIRST 8 HOURS WORKED ON DESIGNATED DAYS OFF; ALL OTHER TIME IS PAID AT THE SATURDAY, SUNDAY AND HOLIDAY OVERTIME RATE.
Z	RATE APPLIES TO CITIES OF DIXON, ELMIRA, RIO VISTA, AND VACAVILLE.
AA	INCLUDES $2.50 FOR THE INDIVIDUAL ACCOUNT RETIREMENT PLAN.
AB	EMPLOYEES WORKING ON ANY SUSPENDED PLATFORM/SCAFFOLD SHALL BE PAID AN ADDITIONAL $15.00 PER DAY ABOVE THE WAGE RATE.
AC	INCLUDES AN AMOUNT FOR DUES CHECK-OFF AND VACATION/HOLIDAY WHICH ARE FACTORED INTO OVERTIME RATES.
AD	RATE APPLIES TO FIRST 2 OVERTIME HOURS MONDAY THROUGH FRIDAY; ALL OTHER OVERTIME IS PAID AT THE DOUBLE TIME RATE.
AE	DESIGNATED DAYS OFF SHALL BE PAID AT THE SATURDAY OVERTIME RATE; PLEASE REFER TO THE HOLIDAY PROVISIONS FOR A LIST OF DESIGNATED DAYS OFF.
AF	INCLUDES AN AMOUNT FOR VACATION/DUES CHECK OFF WHICH IS NOT FACTORED IN THE OVERTIME RATES.
AG	INCLUDED IN STRAIGHT-TIME HOURLY RATE WHICH IS NOT FACTORED IN THE OVERTIME RATES.
AH	PLEASE NOTE THAT THE TAPER CLEAN-UP APPLIES ONLY TO THE TAPER CLASSIFICATION.
AI	INCLUDES AN AMOUNT WITHHELD FOR DUES CHECK OFF WHICH IS NOT FACTORED IN OVERTIME AND HOLIDAY WAGE RATES.

DocuSign Envelope ID: 894511EA-295B-49EB-A393-D26A6837FDD4

AJ INCLUDES AMOUNT WITHHELD FOR DUES CHECK OFF. PLASTERS OPERATING AND WORKING BEHIND PLASTER GUNS SHALL RECEIVE AN ADDITIONAL $2.00 PER DAY ABOVE THE WAGE RATE.

AK RATE APPLIES TO THE FIRST 8 HOURS WORKED; ALL OTHER TIME IS PAID AT THE SUNDAY AND HOLIDAY OVERTIME HOURLY RATE.

AL AMOUNT IS FOR INDUSTRY STABILIZATION ($0.03)

AM INCLUDES AN AMOUNT FOR DUES CHECK OFF.

AN THERE MUST BE AT LEAST ONE JOURNEYMAN PIPEFITTER PER CONTRACTOR ON EACH JOBSITE.

AO THERE SHALL BE NO MORE THAN THREE TRADESMEN TO EVERY TWO JOURNEYMAN PIPEFITTER/ASSISTANT JOURNEYMAN PIPEFITTER COMBINATION EMPLOYED PER CONTRACTOR ON EACH JOBSITE.

AP THERE SHALL BE NO MORE THAN FOUR TRADESMEN TO EVERY TWO JOURNEYMAN PIPEFITTER/ASSISTANT JOURNEYMAN PIPEFITTER COMBINATION EMPLOYED PER CONTRACTOR ON EACH JOBSITE. MAINTENANCE WORK, BOTH DURING AND AFTER THE PLANT ESTABLISHMENT PERIOD, MAY BE PERFORMED BY LANDSCAPE TRADESMEN WITHOUT THE SUPERVISION OF A JOURNEYMAN PIPEFITTER.

AQ INCLUDES SMOHIT AND SHC. EFFECTIVE 1/1/2013, PURSUANT TO LABOR CODE SECTIONS 1773.1 AND 1773.8, THE AMOUNT PAID FOR THIS EMPLOYER PAYMENT MAY VARY RESULTING IN A LOWER TAXABLE BASIC HOURLY WAGE RATE, BUT THE TOTAL HOURLY RATES FOR STRAIGHT TIME AND OVERTIME MAY NOT BE LESS THAN THE GENERAL PREVAILING RATE OF PER DIEM WAGES.

AR RATE APPLIES TO THE FIRST 2 DAILY OVERTIME HOURS AND THE FIRST 8 HOURS ON SATURDAY ONLY; ALL OTHER TIME IS PAID AT THE SUNDAY AND HOLIDAY OVERTIME HOURLY RATE.

AS INCLUDES SHC. EFFECTIVE 1/1/2013, PURSUANT TO LABOR CODE SECTIONS 1773.1 AND 1773.8, THE AMOUNT PAID FOR THIS EMPLOYER PAYMENT MAY VARY RESULTING IN A LOWER TAXABLE BASIC HOURLY WAGE RATE, BUT THE TOTAL HOURLY RATES FOR STRAIGHT TIME AND OVERTIME MAY NOT BE LESS THAN THE GENERAL PREVAILING RATE OF PER DIEM WAGES.

AT RATE APPLIES TO FIRST 4 DAILY OVERTIME HOURS AND THE FIRST 8 HOURS WORKED ON SATURDAY DURING THE EMPLOYEES NORMAL WORKING HOURS. ALL OTHER OVERTIME HOURS SHALL BE PAID AT THE SUNDAY AND HOLIDAY DOUBLE TIME RATE.

AU INCLUDES $0.03 FOR SCHOLAR FUND.

AV THE RATIO OF TERRAZZO FINISHER HOURS TO TERRAZZO WORKER HOURS SHALL NOT EXCEED TWO (2) TO ONE (1).

AW INCLUDES AMOUNT WITHHELD FOR DUES CHECK OFF, WHICH IS FACTORED IN THE OVERTIME RATES. ANY EMPLOYEE WORKING UNDERGROUND SHALL RECEIVE $1.00 PER HOUR IN ADDITION TO REGULAR WAGES.

AX RATE APPLIES TO FIRST TWO YEARS OF EMPLOYMENT ONLY; $1.35 AFTER 2 YEARS; $1.45 AFTER 5 YEARS; $1.60 AFTER 10 YEARS

AY COMPUTATION IS BASED ON THE LOWEST VACATION AMOUNT. THESE RATES SHOULD BE INCREASED BY ANY ADDITIONAL VACATION/HOLIDAY PAY THAT IS REQUIRED.

AZ RATE APPLIES TO FIRST TWO YEARS OF EMPLOYMENT ONLY; $1.27 AFTER 2 YEARS; $1.37 AFTER 5 YEARS; $1.52 AFTER 10 YEARS.

BA RATE APPLIES TO FIRST TWO YEARS OF EMPLOYMENT ONLY; $1.08 AFTER 2 YEARS; $1.18 AFTER 5 YEARS; $1.33 AFTER 10 YEARS.

RECOGNIZED HOLIDAYS: HOLIDAYS UPON WHICH THE GENERAL PREVAILING HOURLY WAGE RATE FOR HOLIDAY WORK SHALL BE PAID, SHALL BE ALL HOLIDAYS IN THE COLLECTIVE BARGAINING AGREEMENT, APPLICABLE TO THE PARTICULAR CRAFT, CLASSIFICATION, OR TYPE OF WORKER EMPLOYED ON THE PROJECT, WHICH IS ON FILE WITH THE DIRECTOR OF INDUSTRIAL RELATIONS. IF THE PREVAILING RATE IS NOT BASED ON A COLLECTIVELY BARGAINED RATE, THE HOLIDAYS UPON WHICH THE PREVAILING RATE SHALL BE PAID SHALL BE AS PROVIDED IN SECTION 6700 OF THE GOVERNMENT CODE. YOU MAY OBTAIN THE HOLIDAY PROVISIONS FOR THE CURRENT DETERMINATIONS ON THE INTERNET AT HTTP://WWW.DIR.CA.GOV/OPRL/PWD. HOLIDAY PROVISIONS FOR CURRENT OR SUPERSEDED DETERMINATIONS MAY BE OBTAINED BY CONTACTING THE OFFICE OF THE DIRECTOR - RESEARCH UNIT AT (415) 703-4774.

TRAVEL AND/OR SUBSISTENCE PAYMENT: IN ACCORDANCE WITH LABOR CODE SECTIONS 1773.1 AND 1773.9, CONTRACTORS SHALL MAKE TRAVEL AND/OR SUBSISTENCE PAYMENTS TO EACH WORKER TO EXECUTE THE WORK. YOU MAY OBTAIN THE TRAVEL AND/OR SUBSISTENCE PROVISIONS FOR THE CURRENT DETERMINATIONS ON THE INTERNET @ HTTP://WWW.DIR.CA.GOV/OPRL/PWD. TRAVEL AND/OR SUBSISTENCE REQUIREMENTS FOR CURRENT OR SUPERSEDED DETERMINATIONS MAY BE OBTAINED FROM THE OFFICE OF THE DIRECTOR - RESEARCH UNIT AT (415) 703-4774.

SOL-2014-2-Determination

DocuSign Envelope ID: 894511EA-295B-49EB-A393-D26A6837FDD4

GENERAL PREVAILING WAGE DETERMINATION MADE BY THE DIRECTOR OF INDUSTRIAL RELATIONS

PURSUANT TO CALIFORNIA LABOR CODE PART 7, CHAPTER 1, ARTICLE 2, SECTIONS 1770, 1773 AND 1773.1

FOR COMMERCIAL BUILDING, HIGHWAY, HEAVY CONSTRUCTION AND DREDGING PROJECTS

LOCALITY: SOLANO COUNTY

DETERMINATION: SOL-2014-2

	CRAFT (JOURNEY LEVEL)	ISSUE DATE	EXPIRATION DATE	INCREASE 1		INCREASE 2		INCREASE 3		INCREASE 4		INCREASE 5		INCREASE 6		INCREASE 7	
				DATE OF NEXT CHANGE	AMOUNT OF INCREASE	DATE OF NEXT CHANGE	AMOUNT OF INCREASE	DATE OF NEXT CHANGE	AMOUNT OF INCREASE	DATE OF NEXT CHANGE	AMOUNT OF INCREASE	DATE OF NEXT CHANGE	AMOUNT OF INCREASE	DATE OF NEXT CHANGE	AMOUNT OF INCREASE	DATE OF NEXT CHANGE	AMOU OF INCREA
	PLASTERER	8/22/2014	06/30/2015**	7/1/2015	$1.85 A	7/1/2016	$1.90 A										
	PLUMBER:																
	PLUMBER, STEAMFITTER, REFRIGERATION FITTER (HVAC)	8/22/2014	06/30/2015**	7/1/2015	$2.40 A												
	PLUMBER LIGHT COMMERCIAL FOR TOTAL PLUMBING BID OF $250,000 OR LESS	8/22/2014	12/31/2014**	1/1/2015	$0.50 B												
	UNDERGROUND UTILITY PIPEFITTER	8/22/2014	06/30/2015**	7/1/2015	$0.85 C	7/1/2016	$0.80 D										
	LANDSCAPE PIPEFITTER	8/22/2014	06/30/2015**	7/1/2015	$0.85 C	7/1/2016	$0.80 D										
E	UNDERGROUND UTILITY ASSISTANT JOURNEYMAN	8/22/2014	06/30/2015**	7/1/2015	$0.85 C	7/1/2016	$0.80 D										
E	LANDSCAPE ASSISTANT JOURNEYMAN	8/22/2014	06/30/2015**	7/1/2015	$0.85 C	7/1/2016	$0.80 D										
F	UNDERGROUND UTILITY TRADESMAN	8/22/2014	06/30/2015**	7/1/2015	$0.85 C	7/1/2016	$0.80 D										
G	LANDSCAPE TRADESMAN I	8/22/2014	06/30/2015**	7/1/2015	$0.85 C	7/1/2016	$0.80 D										
G	LANDSCAPE TRADESMAN II	8/22/2014	06/30/2015**	7/1/2015	$0.85 C	7/1/2016	$0.80 D										
H	**TERRAZZO FINISHER**	8/22/2014	06/30/2015**	7/1/2015	$0.75 A	7/1/2016	$1.00 A	7/1/2017	$1.00 A	7/1/2018	$1.25 A						
H	**TERRAZZO WORKER**	8/22/2014	06/30/2015**	7/1/2015	$1.25 A	7/1/2016	$1.50 A	7/1/2017	$1.75 A	7/1/2018	$2.00 A						
	TILE FINISHER	8/22/2014	03/31/2015**	4/1/2015	$1.14 A												
	RED CIRCLED FINISHER	8/22/2014	03/31/2015**	4/1/2015	$1.14 A												
	TILE SETTER	8/22/2014	03/31/2015**	4/1/2015	$1.75 A												

FOOTNOTES

DocuSign Envelope ID: 894511EA-295B-49EB-A393-D26A6837FDD4

NT

SE

DocuSign Envelope ID: 894511EA-295B-49EB-A393-D26A6837FDD4

GENERAL PREVAILING WAGE DETERMINATION MADE BY THE DIRECTOR OF INDUSTRIAL RELATIONS

PURSUANT TO CALIFORNIA LABOR CODE PART 7, CHAPTER 1, ARTICLE 2, SECTIONS 1770, 1773 AND 1773.1

LOCALITY: SOLANO COUNTY

DETERMINATION: SOL-2014-2

A THE PREDETERMINED INCREASE SHOWN IS TO BE ALLOCATED TO WAGES AND/OR EMPLOYER PAYMENTS. PLEASE CONTACT THE OFFICE OF THE DIRECTOR - RESEARCH UNIT AT (415) 703-4774 WHEN THE PREDETERMINED INCREASE BECOMES DUE TO CONFIRM THE DISTRIBUTION. PLEASE ALSO EXAMINE THE IMPORTANT NOTICES TO SEE IF ANY MODIFICATIONS HAVE BEEN ISSUED, AS THERE MAY BE REDUCTIONS TO PREDETERMINED INCREASES.

B $0.50 TO HEALTH AND WELFARE

C $0.05 TO THE BASIC HOURLY RATE AND $0.80 TO HEALTH AND WELFARE

D $0.10 TO THE BASIC HOURLY RATE, $0.60 TO HEALTH AND WELFARE, AND $0.10 TO VACATION

E THERE MUST BE AT LEAST ONE JOURNEYMAN PIPEFITTER PER CONTRACTOR ON EACH JOBSITE.

F THERE SHALL BE NO MORE THAN THREE TRADESMEN TO EVERY TWO JOURNEYMAN PIPEFITTER/ASSISTANT JOURNEYMAN PIPEFITTER COMBINATION EMPLOYED PER CONTRACTOR ON EACH JOBSITE.

G THERE SHALL BE NO MORE THAN FOUR TRADESMEN TO EVERY TWO JOURNEYMAN PIPEFITTER/ASSISTANT JOURNEYMAN PIPEFITTER COMBINATION EMPLOYED PER CONTRACTOR ON EACH JOBSITE. MAINTENANCE WORK, BOTH DURING AND AFTER THE PLANT ESTABLISHMENT PERIOD, MAY BE PERFORMED BY LANDSCAPE TRADESMEN WITHOUT THE SUPERVISION OF A JOURNEYMAN PIPEFITTER.

H THE RATIO OF TERRAZZO FINISHER HOURS TO TERRAZZO WORKER HOURS SHALL NOT EXCEED TWO (2) TO ONE (1).

SOL-2014-2-INC