Urban Partnership Program Parking Vendor Information Guide

October 5, 2011

Prepared for:
Metropolitan Transportation Commission

Prepared by:

TELVENT
1390 Piccard Dr.
Suite 200
Rockville, MD 20852

Table of Contents

1 Introduction 6
1.1 Purpose 6
1.2 Objectives 6
1.3 References 6
1.4 Key Stakeholders 6
1.5 Points of Contact 6
2 Information for Parking Vendors 7
Appendix A. Acronyms 10
Appendix B. Parking Vendor Form 11
Appendix C. ATIS Parking XSD Narrative 12
Appendix D. XML Formats For UPP Parking 23
Appendix E. UPP Parking XML Schema File 38

List of Figures

Figure 1. UPP Parking System Components to the Parking Vendors 7
Figure 2. UPP Parking JMS Topic and Queues.....8

List of Tables

Technical Lead Contact Information 6

Disclaimers

The information contained in this document is the proprietary and exclusive property of Telvent Transportation North America and Metropolitan Transportation Commission (MTC) except as otherwise indicated. No part of this document, in whole or in part, may be reproduced, stored, transmitted, or used for design purposes without the prior written permission of MTC.

The information contained in this document is subject to change without notice.

The information in this document is provided for informational purposes only. Telvent specifically disclaims all warranties, express or limited, including, but not limited, to the implied warranties of merchantability and fitness for a particular purpose, except as provided for in a separate software license agreement.

Privacy Information

This document may contain information of a sensitive nature. This information should not be given to persons other than those who are involved in the **UPP** project or who will become involved during the lifecycle.

Revision Tracking

Revision	Description	Author	Date
0	Initial Release	KB	08/27/2010

Document Owner

The primary contact for questions

Author: Karl Barnes

Project Name: UPP Parking

Phone:

Email: Karl.Barnes@telvent.com

MTC contact: Alysha Nachtigall

Email: ANachtigall@mtc.ca.gov

Document Approval

Document Name: UPP Parking Vendor Information Guide

Publication Date:

Contract Number:

Project Number: 150000

Prepared by:

Approval: _____

Concurrence: _____

1 Introduction

The Urban Partnership Program (UPP) 511 Parking Information feature will provide parking space availability, garage location, and pricing information for municipal parking lots in downtown San Francisco on 511 phone and web systems, the MY 511 system, and in the 511 traffic data feed to private and public sector Information Service Providers (ISPs). The system will allow 511 users to set preferences for parking information through the personalized MY 511 service. The parking information will be received from various parking vendors including the San Francisco Municipal Transportation Authority (SFMTA)'s UPP SFpark project for parking lots, garages, and on-street metered spaces.

1.1 Purpose

This document describes the information parking vendors will need to communicate with the MTC UPP parking system.

1.2 Objectives

- This document is intended for use by network administrators and software developers.

1.3 References

- *The SFMTA Parking Management Program Concept of Operations Urban Partnership Program, SFMTA, August 6, 2007*
- *Urban Partnership Program System Requirements for UPP Parking 2.0, Telvent, SAIC August 26, 2010*

1.4 Key Stakeholders

The key stakeholders of the project are:

- MTC

1.5 Points of Contact

The table below lists the points of contact for the different technical aspects of the system:

Technical Lead Contact Information

Responsibility	Name	Telephone	E-mail
Project Manager	Lisa Nelson/ Russ Elovitz		**Lisa.Nelson@telvent.com** **Russ.Elovitz@telvent.com**
Parking System	Reuben Bergman		**Reuben.Bergman@telvent.com**

2 Information for Parking Vendors

The Urban Partnership Program (UPP) 511 Parking Information feature will provide parking space availability, garage location, and pricing information for municipal parking lots in downtown San Francisco on 511 phone and web systems, the MY 511 system, and in the 511 traffic data feed to private and public sector Information Service Providers (ISPs). The system will allow 511 users to set preferences for parking information through the personalized MY 511 service. The parking information will be received from various parking vendors including the San Francisco Municipal Transportation Authority (SFMTA)'s UPP SFpark project for parking lots, garages, and on-street metered spaces.

Parking vendors will provide information in a pre-determined XML format to the parking system via a single or cluster of one or more JMS servers. Static (i.e. facility) information will be provided to the Parking Vendor Interface (PVI) on a request basis through pre-configured queues (one per parking vendor) on the JMS server. Dynamic information (i.e. parking space availability and pricing) will be published by the vendor to the JMS server when status changes are detected.

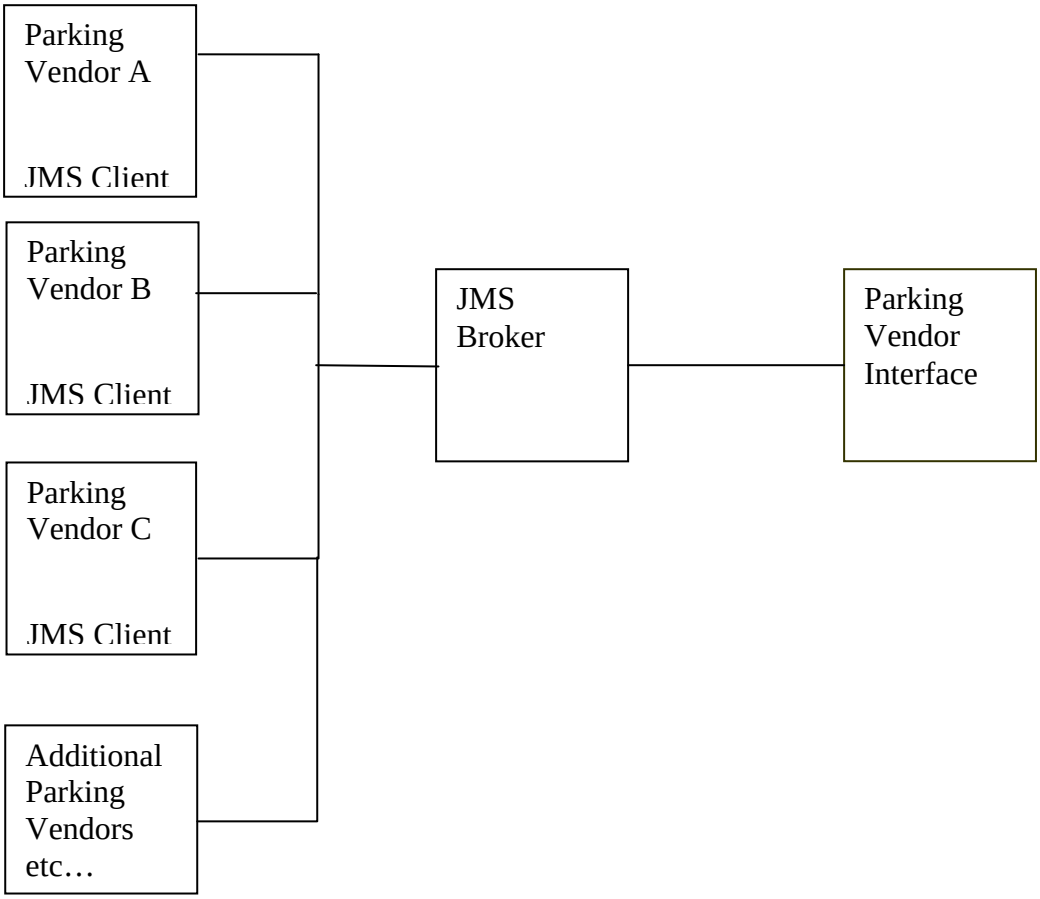

Figure 1. UPP Parking System Components to the Parking Vendors

All parking vendors must develop a JMS client to send and receive JMS messages to/from the PVI. Upon request, the Metropolitan Transportation Commission (MTC) will provide a sample application written in the Java programming language that will connect to an MTC JMS server and periodically, send sample dynamic data

taken from a specified file. The sample application will also respond to requests for static data by sending data from a specified file. Sample files will be provided with the application that conform to the XML schema required by the PVI. Java archive files necessary for establishing connectivity with the JMS server, as well as application build and run scripts for Microsoft Windows compatible operating systems, will also be provided. The schema is included within this document. Upon request, a schema text file will be provided by MTC.

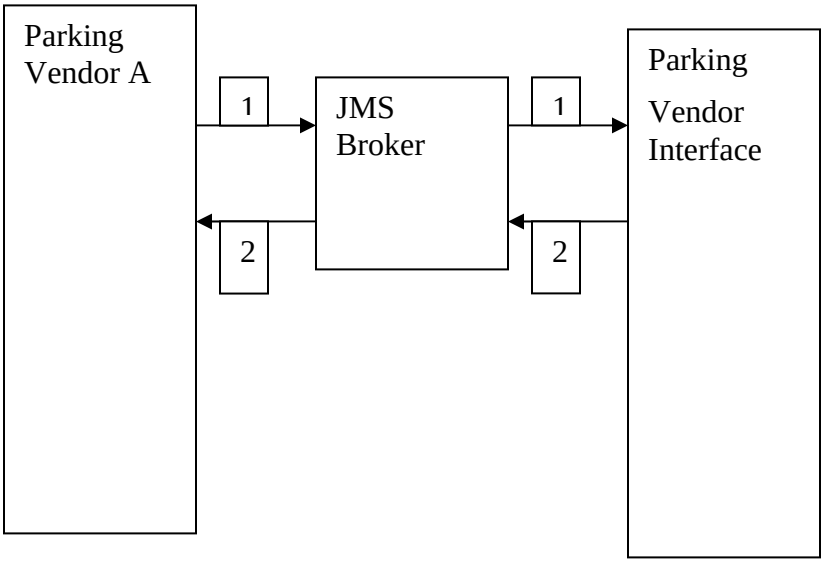

Figure 2. UPP Parking JMS Topic and Queues

All vendors will publish all their data on the same topic. For example,

1. JMS topic Parking Vendor A sending to PVI

Topic name is FROMVENDOR2PVI. All vendors will use this topic to publish messages to the PVI (static and dynamic)

Messages sent on this topic may be either unsolicited or may be a response.

2. JMS Queue PVI sending to Parking Vendor A

Qname is FROMPVI2XXXXX where the XXXXX is a 5 digit VendorID. MTC will assign unique vendorID to each vendor.

For example, if a parking vendor has a vendorID of 01234, that vendor will receive requests on queue FROMPVI201234 and must respond with the requested information.

The vendor response should contain the same JMSCorrelationID in the request. Also, the JMS Time to Live parameter should be set to five (5) minutes for dynamic data and 24 hours for static data.

In addition, prior to connecting to the PVI using JMS participating parking vendors will receive the following information offline:

1. The URL of the JMS broker. including port and protocol (normally port 2506, protocol tcp).

   IMPORTANT NOTE: The specified port number MUST be configured for outbound access from the vendor network.

2. The JMS user name.
3. The JMS password.
4. JMS Queue upon which PVI requests for static data will be sent (see list item #2 above).
5. JMS Topic to use when publishing dynamic data (see list item #1 above).

An XML schema (UPPParking.xsd) will be used to define data exchange between vendors and the PVI. The schema information is included in this document. A schema file that may be used for code generation/validation will be provided by MTC. Vendors may send dynamic data without a request from the PVI by publishing data to a JMS topic. The PVI will subscribe to the same topic to receive dynamic data as it becomes available. Static data will be requested by the PVI.

Appendix A. Acronyms

The acronyms that appear throughout this document are defined in the table below.

Acronym Definitions

ATIS	Advanced Traveller Information System
JMS	Java Message Service
UPP	Urban Partnership Program
MTC	Metropolitan Transportation Commission
XML	Extensible Markup Language
URL	Uniform Resource Locator
PVI	Parking Vendor Interface
MDBI	Master Database Interface

Appendix B. Parking Vendor Form

The following form should be completed and provided to any parking vendor wishing to provide data to the PVI JMS server:

Parking Vendor Name: _____

Parking Vendor ID: _____

Testbed Network Connection Information:

JMS URL: **tcp://jms1.tic.511.org:2506**_____

JMS Username: _____

JMS Password: _____

JMS Receive Queue Name: _____

JMS Publish Topic Name: _____

Production Network Connection Information:

JMS URL: _____

JMS Username: _____

JMS Password: _____

JMS Receive Queue Name: _____

JMS Publish Topic Name: _____

Appendix C. ATIS Parking XSD Narrative

The following schemas are taken from DRAFT SAE J2354 Message Sets for Advanced Traveler Information System (ATIS) Feb 1, 2005.

Data Frame: DF_ParkingLotInformation

Use: Used to describe information about a parking lot.

ASN.1 Representation:

```
ParkingLotInformation ::= SEQUENCE {
      messageHeader     MessageHeader,
      head              Head OPTIONAL,
      location          LRMS.LocationReference,
                        -- location for which this applies
      isForecast        BOOLEAN OPTIONAL,
                        -- forecast or predicted period
      coverageTime      ComplexTime OPTIONAL,
      forecastExpires   DateTimePair OPTIONAL,
      lot-ident         IdentityOrLocation,
      parkingType       TCIP.PI-ParkingType,
      percentFull       Percent OPTIONAL,
      lotDetail         LotInformation,
      prices            PriceSchedule OPTIONAL,
      generalStatus     ITIS.ITIScodesAndText OPTIONAL,
      furtherData       URL-Link OPTIONAL,
      tail              Tail OPTIONAL,
      ...               -- # LOCAL_CONTENT
      }
```

XML Representation:

```
<xs:complexType name="ParkingLotInformation" >
      <xs:sequence>
         <xs:element name="messageHeader" type="MessageHeader" />
         <xs:element name="head" type="Head"  minOccurs="0"/>
         <xs:element name="location" type="lrms:LocationReference" />
         <!-- location for which this applies -->
         <xs:element name="isForecast"  minOccurs="0">
            <xs:simpleType>
               <xs:restriction base="xs:boolean"/>
            </xs:simpleType>
         </xs:element>
         <!-- forecast or predicted period -->
         <xs:element name="coverageTime" type="ComplexTime"  minOccurs="0"/>
         <xs:element name="forecastExpires" type="DateTimePair"  minOccurs="0"/>
         <xs:element name="lot-ident" type="IdentityOrLocation" />
         <xs:element name="parkingType" type="tcip:PI-ParkingType" />
         <xs:element name="percentFull" type="Percent"  minOccurs="0"/>
         <xs:element name="lotDetail" type="LotInformation" />
         <xs:element name="prices" type="PriceSchedule"  minOccurs="0"/>
         <xs:element name="generalStatus" type="itis:ITIScodesAndText"  minOccurs="0"/>
         <xs:element name="furtherData" type="URL-Link"  minOccurs="0"/>
         <xs:element name="tail" type="Tail"  minOccurs="0"/>
         <xs:element name="localParkingLotInformation" type="local:ParkingLotInformation"
minOccurs="0"/>
      </xs:sequence>
</xs:complexType>
```

Used by: This item is used by the one other data structures in this standard, a Data Frame called DF_ResponseGroup [ResponseGroup] <ResponseGroup> . In addition, this item may be used by data structures in other ITS standards.

Remarks: Originally from J2354, Section 5.5 Parking Messages.

Data Frame: DF_Lot Information

Use: A detailed summary of the status of the lot including the number of spaces, when they are expected to fill, and the hours of operation for the lot. The spaces element will provide a more detailed summary of the count of each type of parking space.

ASN.1 Representation:

```
LotInformation ::= SEQUENCE {
     spacesTotal          TCIP.PI-ParkingSpacesTotal      OPTIONAL,
     availability         TCIP.PI-ParkingAvailability     OPTIONAL,
     spaces               ParkingSpaceTypes               OPTIONAL,
     lot-Name             Lot-Name                        OPTIONAL,
     hoursofOperation     TimePair                        OPTIONAL,
     rates                TCIP.PI-ParkingRates            OPTIONAL,
     parkingFillTime      DateTimePair                    OPTIONAL,
     ...
     }
```

XML Representation:

```
<xs:complexType name="LotInformation" >
      <xs:sequence>
         <xs:element name="spacesTotal" type="tcip:PI-ParkingSpacesTotal"  minOccurs="0"/>
         <xs:element name="availability" type="tcip:PI-ParkingAvailability"  minOccurs="0"/>
         <xs:element name="spaces" type="ParkingSpaceTypes"  minOccurs="0"/>
         <xs:element name="lot-Name" type="Lot-Name"  minOccurs="0"/>
         <xs:element name="hoursofOperation" type="TimePair"  minOccurs="0"/>
         <xs:element name="rates" type="tcip:PI-ParkingRates"  minOccurs="0"/>
         <xs:element name="parkingFillTime" type="DateTimePair"  minOccurs="0"/>
      </xs:sequence>
</xs:complexType>
```

Used by: This item is used by the one other data structures in this standard, a Data Frame called DF_ParkingLotInformation `[ParkingLotInformation]` `<ParkingLotInformation>` . In addition, this item may be used by data structures in other ITS standards.

Remarks: Originally from J2354, Section 5.5 Parking Messages. The PI-ParkingVehicleClass is used only as an overall summary of the type of lot this is.

Data Frame: DF_ParkingSpaceTypes

Use: A set of values defining a type of parking space and how many such spaces exist.

ASN.1 Representation:

```
ParkingSpaceTypes ::= SEQUENCE {
     type         ParkingSpaceKind,
     spaces       TCIP.PI-ParkingSpacesTotal,
     vehicleClass TCIP.PI-ParkingVehicleClass OPTIONAL,
     ...
     }
```

XML Representation:

```
<xs:complexType name="ParkingSpaceTypes" >
      <xs:sequence>
         <xs:element name="type" type="ParkingSpaceKind" />
         <xs:element name="spaces" type="tcip:PI-ParkingSpacesTotal" />
         <xs:element name="vehicleClass" type="tcip:PI-ParkingVehicleClass"  minOccurs="0"/>
      </xs:sequence>
</xs:complexType>
```

Used by: This item is used by the one other data structures in this standard, a Data Frame called DF_LotInformation `[LotInformation]` `<LotInformation>` . In addition, this item may be used by data structures in other ITS standards.

Data Element: DE_ParkingSpaceKind

Use: The types of parking spaces. Often used in conjunction with a count of current spaces.

ASN.1 Representation:

```
ParkingSpaceKind ::= ENUMERATED {
   unknown           (0),  -- use for general types when none is known
   auto              (1),  -- regular sized or typical spaces
   compact           (2),
   large             (3),
   handicapped       (4),  -- and all disabled types
   curbside          (5),
   carpool           (6),
   carpoolHours      (7), -- reserved for carpoolers during certain hours
   midDay            (8), -- reserved for mid-day users (may be certain hours)
   electricVehicles  (9), -- electric vehicles (adjacent to charging station)
   motorcycle        (10),
   bicycle           (11),  -- bicycle spaces/lockers/racks
   loadingOnly       (12),
   reserved          (13),
   private           (14),
   valet             (15),
   shortTermOnly     (16), -- use for 15 min parking, atm parking etc...
   truck             (17),
   carAndTrailer     (18),
   semiTrailer       (19),
   bus               (20),
   outside           (21), -- commonly used for parking where
                           -- oversized vehicles can not proceed
   officialVehicles  (22),
   cityCarShare      (23),
   ...               -- # LOCAL_CONTENT
   }
   -- values to 127 reserved for std use
   -- values 128 to 255 reserved for local use
```

XML Representation:

```
<xs:simpleType name="ParkingSpaceKind" >
      <xs:annotation>
         <xs:appinfo>
            unknown (0) -- use for general types when none is known
            auto (1) -- regular sized or typical spaces
            compact (2)
            large (3)
            handicapped (4) -- and all disabled types
            curbside (5)
            carpool (6)
            carpoolHours (7) -- reserved for carpoolers during certain hours
            midDay (8) -- reserved for mid-day users  (may be certain hours)
            electricVehicles (9) -- electric vehicles  (adjacent to charging station)
            motorcycle (10)
            bicycle (11) -- bicycle spaces/lockers/racks
            loadingOnly (12)
            reserved (13)
            private (14)
            valet (15)
            shortTermOnly (16) -- use for 15 min parking ,
            truck (17)
            carAndTrailer (18)
            semiTrailer (19)
            bus (20)
            outside (21) -- commonly used for parking where
             -- oversized vehicles can not proceed
            officialVehicles (22)
            cityCarShare (23) -- LOCAL_CONTENT
         </xs:appinfo>
         <xs:documentation>
            values to 127 reserved for std use
            values 128 to 255 reserved for local use
         </xs:documentation>
      </xs:annotation>
```

```
      <xs:union>
         <xs:simpleType>
            <xs:restriction base="xs:unsignedInt">
               <xs:minInclusive value="0"/>
               <xs:maxInclusive value="23"/>
            </xs:restriction>
         </xs:simpleType>
         <xs:simpleType>
            <xs:restriction base="xs:string">
               <xs:enumeration value="unknown"/>
               <xs:enumeration value="auto"/>
               <xs:enumeration value="compact"/>
               <xs:enumeration value="large"/>
               <xs:enumeration value="handicapped"/>
               <xs:enumeration value="curbside"/>
               <xs:enumeration value="carpool"/>
               <xs:enumeration value="carpoolHours"/>
               <xs:enumeration value="midDay"/>
               <xs:enumeration value="electricVehicles"/>
               <xs:enumeration value="motorcycle"/>
               <xs:enumeration value="bicycle"/>
               <xs:enumeration value="loadingOnly"/>
               <xs:enumeration value="reserved"/>
               <xs:enumeration value="private"/>
               <xs:enumeration value="valet"/>
               <xs:enumeration value="shortTermOnly"/>
               <xs:enumeration value="truck"/>
               <xs:enumeration value="carAndTrailer"/>
               <xs:enumeration value="semiTrailer"/>
               <xs:enumeration value="bus"/>
               <xs:enumeration value="outside"/>
               <xs:enumeration value="officialVehicles"/>
               <xs:enumeration value="cityCarShare"/>
            </xs:restriction>
         </xs:simpleType >
      </xs:union>
</xs:simpleType>
```

Used by: This item is used by the one other data structures in this standard, a Data Frame called DF_ParkingSpaceTypes `[ParkingSpaceTypes]` `<ParkingSpaceTypes>` . In addition, this item may be used by data structures in other ITS standards.

Message: MSG_ParkingSpaceReply

Use: A message to contain information about a parking space.

ASN.1 Representation:

```
ParkingSpaceReply ::= SEQUENCE {
     messageHeader     MessageHeader,
     parkingFacID      TCIP.PI-ParkingFacID,  -- the lot in queston
     parkingRates      TCIP.PI-ParkingRates,  -- the rates for this lot
     confirm           BOOLEAN,
     ...
     }
```

XML Representation:

```
<xs:element name="parkingSpaceReply" type="ParkingSpaceReply"/>
<xs:complexType name="ParkingSpaceReply" >
      <xs:sequence>
         <xs:element name="messageHeader" type="MessageHeader" />
         <xs:element name="parkingFacID" type="tcip:PI-ParkingFacID" />
         <!-- the lot in queston -->
         <xs:element name="parkingRates" type="tcip:PI-ParkingRates" />
         <!-- the rates for this lot -->
         <xs:element name="confirm" >
            <xs:simpleType>
               <xs:restriction base="xs:boolean"/>
            </xs:simpleType>
         </xs:element>
      </xs:sequence>
```

```
</xs:complexType>
```

Remarks: Originally from J2354, Section 5.5 Parking Messages.

Message: MSG_ParkingSpaceRequest

Use: send to request a parking space from a specific lot.

ASN.1 Representation:

```
ParkingSpaceRequest ::= SEQUENCE {
     messageHeader          MessageHeader,
     traveler-Identity      Traveler-Identity,
     vehicleData            VehicleRestrictions OPTIONAL,
     parkingFacID           TCIP.PI-ParkingFacID,
     duration               TimeInterval OPTIONAL,
     requestDateTime        DateTimePair OPTIONAL,
     ...
     }
```

XML Representation:

```
<xs:element name="parkingSpaceRequest" type="ParkingSpaceRequest"/>
<xs:complexType name="ParkingSpaceRequest" >
      <xs:sequence>
         <xs:element name="messageHeader" type="MessageHeader" />
         <xs:element name="traveler-Identity" type="Traveler-Identity" />
         <xs:element name="vehicleData" type="VehicleRestrictions"  minOccurs="0"/>
         <xs:element name="parkingFacID" type="tcip:PI-ParkingFacID" />
         <xs:element name="duration" type="TimeInterval"  minOccurs="0"/>
         <xs:element name="requestDateTime" type="DateTimePair"  minOccurs="0"/>
      </xs:sequence>
</xs:complexType>
```

Remarks: Originally from J2354, Section 5.5 Parking Messages.

Data Element: EXT_PI_ParkingAvailability

Use: External data element taken from TCIP. The real-time availability of parking spaces at a particular parking facility.

ASN.1 Representation:

```
PI-ParkingAvailability ::= INTEGER
```

XML Representation:

```
<xs:simpleType name="PI-ParkingAvailability" >
      <xs:restriction base="xs:int"/>
</xs:simpleType>
```

Used by: This item is used by the one other data structures in this standard, a Data Frame called DF_LotInformation `[LotInformation]` `<LotInformation>` . In addition, this item may be used by data structures in other ITS standards.

Data Element: EXT_PI_ParkingFacID

Use: External data element taken from TCIP. A unique identification number for a parking facility.

ASN.1 Representation:

```
PI-ParkingFacID ::= INTEGER (0..65535)
```

XML Representation:

```
<xs:simpleType name="PI-ParkingFacID" >
      <xs:restriction base="xs:unsignedShort"/>
</xs:simpleType>
```

Used by: This item is used by the following 3 other data structures in this standard (record type, descriptive name, ASN.1, and XML name of each):

Data Frame DF_Parking-Instructions [ParkingInstructions] <ParkingInstructions>, and

Message MSG_ParkingSpaceReply [ParkingSpaceReply] <ParkingSpaceReply>, and

Message MSG_ParkingSpaceRequest [ParkingSpaceRequest] <ParkingSpaceRequest>.

In addition, this item may be used by data structures in other ITS standards.

Data Element: EXT_PI_ParkingProvided

Use: External data element taken from TCIP. An identifier that tells whether or not parking is available at a transit stop.

ASN.1 Representation:

```
PI-ParkingProvided ::= BOOLEAN
```

XML Representation:

```
<xs:simpleType name="PI-ParkingProvided" >
      <xs:restriction base="xs:boolean"/>
</xs:simpleType>
```

Data Element: EXT_PI_ParkingRates

Use: External data element taken from TCIP. The amount of money required to park at a parking facility. This can be expressed hourly, by the day, etc. This text field allows for a short explanation of the way parking cost is calculated.

ASN.1 Representation:

```
PI-ParkingRates ::= UTF8String (SIZE(0..1000))
```

XML Representation:

```
<xs:simpleType name="PI-ParkingRates" >
      <xs:restriction base="xs:string">
         <xs:minLength value="0"/>
         <xs:maxLength value="1000"/>
      </xs:restriction>
</xs:simpleType>
```

Used by: This item is used by the following 2 other data structures in this standard (record type, descriptive name, ASN.1, and XML name of each):

Data Frame DF_LotInformation [LotInformation] <LotInformation>, and

Message MSG_ParkingSpaceReply [ParkingSpaceReply] <ParkingSpaceReply>.

In addition, this item may be used by data structures in other ITS standards.

Remarks: A size limit was added for ATIS use.

Data Element: EXT_PI_ParkingSpacesTotal

Use: External data element taken from TCIP. The total number of parking spaces in a parking facility.

ASN.1 Representation:

```
PI-ParkingSpacesTotal ::= INTEGER (0..65535)
```

XML Representation:

```
<xs:simpleType name="PI-ParkingSpacesTotal" >
      <xs:restriction base="xs:unsignedShort"/>
</xs:simpleType>
```

Used by: This item is used by the following 2 other data structures in this standard (record type, descriptive name, ASN.1, and XML name of each):

Data Frame DF_LotInformation [LotInformation] <LotInformation>, and

Data Frame DF_ParkingSpaceTypes [ParkingSpaceTypes] <ParkingSpaceTypes>.

In addition, this item may be used by data structures in other ITS standards.

Data Element: EXT_PI_ParkingType

Use: External data element taken from TCIP. The physical characteristics of a parking facility.

ASN.1 Representation:

```
PI-ParkingType ::= INTEGER
```

XML Representation:

```
<xs:simpleType name="PI-ParkingType" >
      <xs:restriction base="xs:int"/>
</xs:simpleType>
```

Used by: This item is used by the following 2 other data structures in this standard (record type, descriptive name, ASN.1, and XML name of each):

Data Frame DF_ParkingLotInformation [ParkingLotInformation] <ParkingLotInformation>, and

Data Frame DF_ParkingRequestDetails [ParkingRequestDetails] <ParkingRequestDetails>.

In addition, this item may be used by data structures in other ITS standards.

Remarks: Consult TCIP for suitable codes.

Data Element: EXT_PI_ParkingVehicleClass

Use: External data element taken from TCIP. The vehicle class applicable to parking facility concerns.

ASN.1 Representation:

```
PI-ParkingVehicleClass ::= INTEGER
```

XML Representation:

```
<xs:simpleType name="PI-ParkingVehicleClass" >
      <xs:restriction base="xs:int"/>
</xs:simpleType>
```

Used by: This item is used by the one other data structures in this standard, a Data Frame called DF_ParkingSpaceTypes [ParkingSpaceTypes] <ParkingSpaceTypes> . In addition, this item may be used by data structures in other ITS standards.

Remarks: Consult TCIP for suitable codes.

Data Frame: DF_DateTimePair

Use: A data and time value. In addition, the timeoffset element can be used to convey the local time zone. This is required when merging data sources over multiple time zones.

ASN.1 Representation:

```
DateTimePair ::= SEQUENCE {
     date    Date,
     time    Time,
     offset  TimeOffset OPTIONAL
     }
```

XML Representation:

```
<xs:complexType name="DateTimePair" >
      <xs:sequence>
         <xs:element name="date" type="Date" />
         <xs:element name="time" type="Time" />
```

```
        <xs:element name="offset" type="TimeOffset"  minOccurs="0"/>
      </xs:sequence>
</xs:complexType>
```

Example
"2010-01-10T14:30:42.0000-08:00"

Data Frame: DF_PriceSchedule

Use: A data frame to relate price and cost information.

ASN.1 Representation:

```
PriceSchedule ::= SEQUENCE {
     start           DateTimePair                    OPTIONAL,
     end             DateTimePair                    OPTIONAL,
     entries         SEQUENCE  (SIZE(1..100)) OF PriceScheduleEntry
}
```

XML Representation:

```
<xs:complexType name="PriceSchedule" >
      <xs:sequence>
         <xs:element name="start" type="DateTimePair"  minOccurs="0"/>
         <xs:element name="end" type="DateTimePair"  minOccurs="0"/>
         <xs:element name="entries" >
            <xs:complexType>
               <xs:sequence minOccurs="1" maxOccurs="100">
                  <xs:element name="entry" type="PriceScheduleEntry" />
               </xs:sequence>
            </xs:complexType>
         </xs:element>
      </xs:sequence>
</xs:complexType>
```

Used by: This item is used by the following 2 other data structures in this standard (record type, descriptive name, ASN.1, and XML name of each):

Data Frame DF_Parking-Instructions [ParkingInstructions] <ParkingInstructions>, and

Data Frame DF_ParkingLotInformation [ParkingLotInformation] <ParkingLotInformation>.

In addition, this item may be used by data structures in other ITS standards.

Remarks: Originally from J2354, Section 5.1 Global Messages.

Data Frame: DF_PriceScheduleEntry

Use: A summary of the prices for a lot.

ASN.1 Representation:

```
PriceScheduleEntry ::= SEQUENCE {
     price-DayType            Price-DayType,
     time                     TimePair OPTIONAL,
                              -- a range of times over which the next
                              -- two items are vaild
     priceFirstPayment        Cost OPTIONAL,
                              -- the cost of entry the first time, or min cost
     priceMaximum             Cost OPTIONAL,
                              -- typically the daily max price
     times                    SEQUENCE  (SIZE(1..100)) OF TimePriceInterval OPTIONAL,
                              -- used to convey prices vs time data such as
                              -- discounted parking if entry before 7 AM
     ...
     }
```

XML Representation:

```
<xs:complexType name="PriceScheduleEntry" >
      <xs:sequence>
         <xs:element name="price-DayType" type="Price-DayType" />
         <xs:element name="time" type="TimePair"  minOccurs="0"/>
         <!-- a range of times over which the next
         two items are vaild -->
         <xs:element name="priceFirstPayment" type="Cost"  minOccurs="0"/>
         <!-- the cost of entry the first time,  or min cost -->
         <xs:element name="priceMaximum" type="Cost"  minOccurs="0"/>
         <!-- typically the daily max price -->
         <xs:element name="times"  minOccurs="0">
            <xs:complexType>
               <xs:sequence minOccurs="1" maxOccurs="100">
                  <xs:element name="time" type="TimePriceInterval" />
                  <!-- used to convey prices vs time data such as discounted parking if entry
before 7 AM -->
               </xs:sequence>
            </xs:complexType>
         </xs:element>
      </xs:sequence>
</xs:complexType>
```

Used by: This item is used by the one other data structures in this standard, a Data Frame called DF_PriceSchedule `[PriceSchedule]` `<PriceSchedule>` . In addition, this item may be used by data structures in other ITS standards.

Remarks: Originally from J2354, Section 5.5 Parking Messages. The priceFirstPayment is the first payment where it differs from succeeding payments or the fixed price of a stay.

Data Element: DE_PRICE_DayType_code

Use: Used as part of Sending a Price Schedule - The Days of Week to which the following information pertains - also includes designator "Hol" for Holiday.

ASN.1 Representation:

```
Price-DayType ::= ENUMERATED {
     holiday                          (0),
     sunday                           (1),
     monday                           (2),
     tuesday                          (3),
     wednesday                        (4),
     thursday                         (5),
     friday                           (6),
     saturday                         (7),
     all                              (8),
     mondayToFriday                   (9),
     mondayToFridayExceptHolidays     (10),
     weekend                          (11),
     mondayToThursday                 (12),
     unknown                         (255),
     ... -- # LOCAL_CONTENT
     }
     -- values to 127 reserved for std use
     -- values 128 to 254 reserved for local use
```

XML Representation:

```
<xs:simpleType name="Price-DayType" >
      <xs:annotation>
         <xs:appinfo>
            holiday (0)
            sunday (1)
            monday (2)
            tuesday (3)
            wednesday (4)
            thursday (5)
            friday (6)
```

```
            saturday (7)
            all (8)
            mondayToFriday (9)
            mondayToFridayExceptHolidays (10)
            weekend (11)
            mondayToThursday (12)
            unknown (255) -- LOCAL_CONTENT
         </xs:appinfo>
         <xs:documentation>
            values to 127 reserved for std use
            values 128 to 254 reserved for local use
         </xs:documentation>
      </xs:annotation>
      <xs:union>
         <xs:simpleType>
            <xs:restriction base="xs:unsignedInt">
               <xs:minInclusive value="0"/>
               <xs:maxInclusive value="255"/>
            </xs:restriction>
         </xs:simpleType>
         <xs:simpleType>
            <xs:restriction base="xs:string">
               <xs:enumeration value="holiday"/>
               <xs:enumeration value="sunday"/>
               <xs:enumeration value="monday"/>
               <xs:enumeration value="tuesday"/>
               <xs:enumeration value="wednesday"/>
               <xs:enumeration value="thursday"/>
               <xs:enumeration value="friday"/>
               <xs:enumeration value="saturday"/>
               <xs:enumeration value="all"/>
               <xs:enumeration value="mondayToFriday"/>
               <xs:enumeration value="mondayToFridayExceptHolidays"/>
               <xs:enumeration value="weekend"/>
               <xs:enumeration value="mondayToThursday"/>
               <xs:enumeration value="unknown"/>
            </xs:restriction>
         </xs:simpleType >
      </xs:union>
</xs:simpleType>
```

Used by: This item is used by the one other data structures in this standard, a Data Frame called DF_PriceScheduleEntry `[PriceScheduleEntry]` `<PriceScheduleEntry>` . In addition, this item may be used by data structures in other ITS standards.

XML Representation:

```
<xs:complexType name="IdentityOrLocation" >
      <xs:choice>
         <xs:element name="location" type="lrms:LocationReference" />
         <xs:element name="dbIdentity" type="DatabaseIdentity" />
      </xs:choice>
</xs:complexType
```

XML Representation:

```
<xs:complexType name="LocationReference" >
      <xs:annotation>
         <xs:documentation>
            the ModelProfile has been removed
         </xs:documentation>
      </xs:annotation>
      <xs:choice>
         <xs:element name="geometry" type="GeometryProfile" />
         <xs:element name="geocoordinate" type="GeographicCoordinate" />
         <xs:element name="grid" type="GridProfile" />
         <xs:element name="linearReferencing" type="LinearReferenceProfile" />
         <xs:element name="crossStreets" type="ISP-Vehicle" />
         <!-- was: CrossStreetsProfile -->
         <xs:element name="address" type="AddressProfile" />
```

```
         <xs:element name="pubgrid" type="PublicGridProfile" />
      </xs:choice>
</xs:complexType>
```

XML Representation:

```
<xs:complexType name="DatabaseIdentity" >
      <xs:sequence>
         <xs:element name="identity"  minOccurs="0">
            <xs:simpleType>
               <xs:restriction base="xs:string">
                  <xs:minLength value="1"/>
                  <xs:maxLength value="10"/>
               </xs:restriction>
            </xs:simpleType>
         </xs:element>
         <xs:element name="number" type="DatabaseNumber"  minOccurs="0"/>
         <xs:element name="name" type="Database"  minOccurs="0"/>
         <xs:element name="version" type="DatabaseVersion"  minOccurs="0"/>
      </xs:sequence>
</xs:complexType>
```

Appendix D. XML Formats For UPP Parking

The schema defined for this project should be used by the following entities:

1. Parking Vendors
2. The Parking Vendor Interface (java application)
3. The Master Database Interface (java application)
4. The Multi Modal Trip Planner.

This schema contains a header that has source, destination, request/response, and parking vendor inventory information (see UPPParking.xsd).

From Parking Vendors to PVI

There are two formats:

1. From Vendor sending parking facility configuration static format.
2. From Vendor sending parking facility dynamic. This is sent several times a day to update the availability and pricing.

Below is an example of the static format (not all optional fields are shown):


```
<  <?xml version="1.0" encoding="UTF-8" ?>
- <n:park xmlns:n="http://www.dummy-UPPParking-address">
  <timestamp>2010-11-30T23:59:59</timestamp>
- <header>
  <type>response</type>
  <source>VENDOR</source>
  <dest>PVI</dest>
  <action />
  </header>
  <success>true</success>
  <responsetype>vendorinventorystatic</responsetype>
- <vendorinventorystatic>
  <vendorid>02030</vendorid>
  <vendorname>sf park</vendorname>
- <facilityinfo>
  <parkingFacID>48284</parkingFacID>
- <location>
- <grid>
- <gridArray>
- <gridArray-item>
  <id>253</id>
  <latitude>3930</latitude>
  <longitude>-7695</longitude>
  <zoom>2</zoom>
  </gridArray-item>
- <gridArray-item>
  <id>247</id>
  <latitude>3930</latitude>
  <longitude>-7695</longitude>
  <zoom>2</zoom>
  </gridArray-item>
- <gridArray-item>
  <id>246</id>
  <latitude>3930</latitude>
  <longitude>-7695</longitude>
  <zoom>2</zoom>
```

```
  </gridArray-item>
- <gridArray-item>
  <id>255</id>
  <latitude>3935</latitude>
  <longitude>-7691</longitude>
  <zoom>2</zoom>
  </gridArray-item>
- <gridArray-item>
  <id>254</id>
  <latitude>3830</latitude>
  <longitude>-7691</longitude>
  <zoom>2</zoom>
  </gridArray-item>
  </gridArray>
  </grid>
- <crossStreet>
- <crossStreetsPoint>
- <onStreetInfo>
  <name>main street</name>
  </onStreetInfo>
- <atStreetInfo>
  <name>maple st</name>
  </atStreetInfo>
- <geoLocation>
  <latitude>3804</latitude>
  <longitude>-7702</longitude>
  </geoLocation>
  </crossStreetsPoint>
  </crossStreet>
  </location>
  <parkingType>2</parkingType>
- <lotDetail>
  <city>San Francisco</city>
  <neighborhood>The Haight</neighborhood>
  <spacesTotal>106</spacesTotal>
  <lot-Name>very best parking inc</lot-Name>
- <hoursofOperation>
- <weekly>
- <weekly-item>
  <day>monday</day>
- <times>
  <start>093000</start>
  <end>163001</end>
  </times>
  </weekly-item>
- <weekly-item>
  <day>tuesday</day>
- <times>
  <start>103000</start>
  <end>173030</end>
  </times>
  </weekly-item>
  </weekly>
  </hoursofOperation>
- <parkingFillTime>
  <date>20100105</date>
  <time>120305</time>
  </parkingFillTime>
- <entrance>
  <entranceHeight>220</entranceHeight>
- <entranceLocation>
  <name>122 West 57th St</name>
  </entranceLocation>
  </entrance>
- <entrance>
  <entranceHeight>243</entranceHeight>
- <entranceLocation>
  <name>122 East 57th St</name>
  </entranceLocation>
  </entrance>
  <paymentOptions>personal check</paymentOptions>
```

```
  <maxTimeLimit>600</maxTimeLimit>
  </lotDetail>
- <moreDetail>
  <ownershipAgencyType>public</ownershipAgencyType>
  <structureType>garage</structureType>
  <peakUsageTimes>afternoon peak</peakUsageTimes>
  <onsiteSecurityInfo>yes</onsiteSecurityInfo>
  <contactphone2>202 555 7184</contactphone2>
- <numberofspaces>
  <structureType>electric car spaces</structureType>
  <numspaces>233</numspaces>
  </numberofspaces>
- <numberofspaces>
  <structureType>motorcycle spaces</structureType>
  <numspaces>3</numspaces>
  </numberofspaces>
- <numberofspaces>
  <structureType>standard spaces</structureType>
  <numspaces>203</numspaces>
  </numberofspaces>
- <transitagency>
  <agency>transit agency 1</agency>
  <agency>transit agency two</agency>
  <agency>transit agency three</agency>
  </transitagency>
  <realtimeinfoavailable>no</realtimeinfoavailable>
  <haschargingport>no</haschargingport>
- <parkingaccess>
  <name>main stairwell</name>
  <accesstype>entrance</accesstype>
  <accessfeature>stair</accessfeature>
  <addlInfo>additional info is here</addlInfo>
  </parkingaccess>
- <parkingaccess>
  <name>main stairwell</name>
  <accesstype>exit</accesstype>
  <accessfeature>stair</accessfeature>
  </parkingaccess>
- <paymentdiscountAAA>
  <usDollar>3.98</usDollar>
  </paymentdiscountAAA>
  <paycashieratexit>yes</paycashieratexit>
  <servicetypes>valet</servicetypes>
  <servicetypes>security</servicetypes>
  <reservMethod>at desk in lobby</reservMethod>
  <lockersize>large</lockersize>
- <lockercost>
  <usDollar>3.25</usDollar>
  </lockercost>
  </moreDetail>
- <prices>
- <start>
  <date>20100429</date>
  <time>093000</time>
  </start>
- <end>
  <date>20100430</date>
  <time>173001</time>
  </end>
- <entries>
- <entry>
  <price-DayType>monday</price-DayType>
- <spacetype>
  <type>compact</type>
  </spacetype>
- <time>
  <start>083000</start>
  <end>221000</end>
  </time>
- <priceFirstPayment>
  <usDollar>25.59</usDollar>
```

```
  </priceFirstPayment>
- <priceMaximum>
  <usDollar>35.99</usDollar>
  </priceMaximum>
  </entry>
- <entry>
  <price-DayType>holiday</price-DayType>
- <spacetype>
  <type>compact</type>
  </spacetype>
- <times>
- <time>
  <timeInterval>25</timeInterval>
- <cost>
  <usDollar>27.00</usDollar>
  </cost>
  </time>
  </times>
- <times>
- <time>
  <timeInterval>25</timeInterval>
- <cost>
  <usDollar>3.50</usDollar>
  </cost>
  </time>
  </times>
- <times>
- <time>
  <timeInterval>251</timeInterval>
- <cost>
  <usDollar>3.51</usDollar>
  </cost>
  </time>
  </times>
  </entry>
  </entries>
  </prices>
  </facilityinfo>
- <facilityinfo>
  <parkingFacID>48386</parkingFacID>
- <location>
- <grid>
- <gridArray>
- <gridArray-item>
  <id>253</id>
  <latitude>3930</latitude>
  <longitude>-7695</longitude>
  <zoom>2</zoom>
  </gridArray-item>
- <gridArray-item>
  <id>247</id>
  <latitude>3930</latitude>
  <longitude>-7695</longitude>
  <zoom>2</zoom>
  </gridArray-item>
- <gridArray-item>
  <id>246</id>
  <latitude>3930</latitude>
  <longitude>-7695</longitude>
  <zoom>2</zoom>
  </gridArray-item>
- <gridArray-item>
  <id>255</id>
  <latitude>3935</latitude>
  <longitude>-7691</longitude>
  <zoom>2</zoom>
  </gridArray-item>
- <gridArray-item>
  <id>254</id>
  <latitude>3830</latitude>
  <longitude>-7691</longitude>
```

```
  <zoom>2</zoom>
  </gridArray-item>
  </gridArray>
  </grid>
- <crossStreet>
- <crossStreetsLink>
- <onStreetInfo>
  <name>main street</name>
  </onStreetInfo>
- <fromStreetInfo>
  <name>eggmont st</name>
  </fromStreetInfo>
- <toStreetInfo>
  <name>crownshield way</name>
  </toStreetInfo>
- <startGeoLocation>
  <latitude>3804</latitude>
  <longitude>-7702</longitude>
  </startGeoLocation>
- <endGeoLocation>
  <latitude>3845</latitude>
  <longitude>-7704</longitude>
  </endGeoLocation>
  </crossStreetsLink>
  </crossStreet>
  </location>
  <parkingType>2</parkingType>
- <lotDetail>
  <city>nice city name</city>
  <spacesTotal>105</spacesTotal>
- <hoursofOperation>
- <weekly>
- <weekly-item>
  <day>monday</day>
- <times>
  <start>093000</start>
  <end>163000</end>
  </times>
  </weekly-item>
- <weekly-item>
  <day>tuesday</day>
- <times>
  <start>103000</start>
  <end>173030</end>
  </times>
  </weekly-item>
  </weekly>
  </hoursofOperation>
- <entrance>
  <entranceHeight>220</entranceHeight>
- <entranceLocation>
  <name>122 West 57th St</name>
  </entranceLocation>
  </entrance>
- <entrance>
  <entranceHeight>243</entranceHeight>
- <entranceLocation>
  <name>122 East 57th St</name>
  </entranceLocation>
  </entrance>
  <paymentOptions>personal check</paymentOptions>
  <maxTimeLimit>600</maxTimeLimit>
  </lotDetail>
- <moreDetail>
  <ownershipAgencyType>public</ownershipAgencyType>
  <structureType>garage</structureType>
- <numberofspaces>
  <structureType>electric car spaces</structureType>
  <numspaces>13</numspaces>
  </numberofspaces>
- <numberofspaces>
```

```
  <structureType>motorcycle spaces</structureType>
  <numspaces>3</numspaces>
  </numberofspaces>
  <haschargingport>yes</haschargingport>
  <servicetypes>valet</servicetypes>
  <servicetypes>security</servicetypes>
- <associatedfiles>
  <filename>file3.dat</filename>
  <base64data />
  </associatedfiles>
- <associatedfiles>
  <filename>fpfile.dat</filename>
  <base64data />
  </associatedfiles>
  </moreDetail>
- <prices>
  <priority>1</priority>
- <start>
  <date>20100425</date>
  <time>113000</time>
  </start>
- <end>
  <date>20100425</date>
  <time>143000</time>
  </end>
- <entries>
- <entry>
  <price-DayType>monday</price-DayType>
- <spacetype>
  <type>compact</type>
  </spacetype>
- <times>
- <time>
  <timeInterval>30</timeInterval>
- <cost>
  <usDollar>4.50</usDollar>
  </cost>
  </time>
  <rateDescription>$4.50 per half hour</rateDescription>
  </times>
- <times>
- <time>
  <timeInterval>60</timeInterval>
- <cost>
  <usDollar>8.50</usDollar>
  </cost>
  </time>
  <rateDescription>$8.50 per hour</rateDescription>
  </times>
- <times>
- <time>
  <timeInterval>120</timeInterval>
- <cost>
  <usDollar>16.00</usDollar>
  </cost>
  </time>
  <rateDescription>$16.00 for two hours</rateDescription>
  </times>
  </entry>
- <entry>
  <price-DayType>holiday</price-DayType>
- <spacetype>
  <type>compact</type>
  </spacetype>
- <times>
- <time>
  <timeInterval>26</timeInterval>
- <cost>
  <usDollar>427.00</usDollar>
  </cost>
  </time>
```

```
  </times>
- <times>
- <time>
  <timeInterval>45</timeInterval>
- <cost>
  <usDollar>4.50</usDollar>
  </cost>
  </time>
  </times>
- <times>
- <time>
  <timeInterval>251</timeInterval>
- <cost>
  <usDollar>4.51</usDollar>
  </cost>
  </time>
  </times>
  </entry>
  </entries>
  </prices>
- <prices>
  <priority>2</priority>
- <entries>
- <entry>
  <price-DayType>monday</price-DayType>
- <spacetype>
  <type>compact</type>
  </spacetype>
- <times>
- <time>
  <timeInterval>26</timeInterval>
- <cost>
  <usDollar>45.59</usDollar>
  </cost>
  </time>
  </times>
- <times>
- <time>
  <timeInterval>42</timeInterval>
- <cost>
  <usDollar>4.20</usDollar>
  </cost>
  </time>
  </times>
- <times>
- <time>
  <timeInterval>134</timeInterval>
- <cost>
  <usDollar>4.51</usDollar>
  </cost>
  </time>
  </times>
  </entry>
- <entry>
  <price-DayType>holiday</price-DayType>
- <spacetype>
  <type>compact</type>
  </spacetype>
- <times>
- <time>
  <timeInterval>26</timeInterval>
- <cost>
  <usDollar>427.00</usDollar>
  </cost>
  </time>
  </times>
- <times>
- <time>
  <timeInterval>45</timeInterval>
- <cost>
  <usDollar>4.50</usDollar>
```

```
  </cost>
  </time>
  </times>
- <times>
- <time>
  <timeInterval>251</timeInterval>
- <cost>
  <usDollar>4.51</usDollar>
  </cost>
  </time>
  </times>
  </entry>
  </entries>
  </prices>
- <prices>
- <entries>
- <entry>
  <price-DayType>monday</price-DayType>
- <spacetype>
  <type>compact</type>
  </spacetype>
- <times>
- <time>
  <timeInterval>26</timeInterval>
- <cost>
  <usDollar>45.59</usDollar>
  </cost>
  </time>
  </times>
- <times>
- <time>
  <timeInterval>42</timeInterval>
- <cost>
  <usDollar>4.20</usDollar>
  </cost>
  </time>
  </times>
- <times>
- <time>
  <timeInterval>134</timeInterval>
- <cost>
  <usDollar>4.51</usDollar>
  </cost>
  </time>
  </times>
  </entry>
- <entry>
  <price-DayType>holiday</price-DayType>
- <spacetype>
  <type>compact</type>
  </spacetype>
- <times>
- <time>
  <timeInterval>26</timeInterval>
- <cost>
  <usDollar>427.00</usDollar>
  </cost>
  </time>
  </times>
- <times>
- <time>
  <timeInterval>45</timeInterval>
- <cost>
  <usDollar>4.50</usDollar>
  </cost>
  </time>
  </times>
- <times>
- <time>
  <timeInterval>251</timeInterval>
- <cost>
```

```
<usDollar>4.51</usDollar>
</cost>
</time>
</times>
</entry>
</entries>
</prices>
</facilityinfo>
</vendorinventorystatic>
</n:park>
```


For LocationReference, only the GridProfile and CrossStreetsProfile will be supported.

The GridProfile offers a GridArray which allows up to ten points. Each point consists of a latitude, longitude, ID, and zoom parameter.

Below is an example of the dynamic format:


```
   <?xml version="1.0" encoding="UTF-8" ?>
- <n:park xmlns:n="http://www.dummy-UPPParking-address">
  <timestamp>2010-11-30T23:59:59</timestamp>
- <header>
  <type />
  <source>VENDOR</source>
  <dest>PVI</dest>
  <action />
  </header>
- <vendorinventorydynamic>
  <vendorid>02030</vendorid>
  <vendorname>bestparking inc</vendorname>
- <facilityinfo>
  <parkingFacID>2489084</parkingFacID>
  <percentFull>35</percentFull>
  <spacesTotal>105</spacesTotal>
  <availability>24</availability>
  <occupied>81</occupied>
- <prices>
  <priority>1</priority>
- <start>
  <date>20100425</date>
  <time>113000</time>
  </start>
- <end>
  <date>20100425</date>
  <time>143000</time>
  </end>
- <entries>
- <entry>
  <price-DayType>monday</price-DayType>
- <spacetype>
  <type>compact</type>
  </spacetype>
- <times>
- <time>
  <timeInterval>30</timeInterval>
- <cost>
  <usDollar>4.50</usDollar>
  </cost>
  </time>
  <rateDescription>$4.50 per half hour</rateDescription>
  </times>
- <times>
- <time>
  <timeInterval>60</timeInterval>
- <cost>
  <usDollar>8.50</usDollar>
  </cost>
```

```
  </time>
  <rateDescription>$8.50 per hour</rateDescription>
  </times>
- <times>
- <time>
  <timeInterval>120</timeInterval>
- <cost>
  <usDollar>16.00</usDollar>
  </cost>
  </time>
  <rateDescription>$16.00 for two hours</rateDescription>
  </times>
  </entry>
- <entry>
  <price-DayType>holiday</price-DayType>
- <spacetype>
  <type>compact</type>
  </spacetype>
- <times>
- <time>
  <timeInterval>26</timeInterval>
- <cost>
  <usDollar>427.00</usDollar>
  </cost>
  </time>
  </times>
- <times>
- <time>
  <timeInterval>45</timeInterval>
- <cost>
  <usDollar>4.50</usDollar>
  </cost>
  </time>
  </times>
- <times>
- <time>
  <timeInterval>251</timeInterval>
- <cost>
  <usDollar>4.51</usDollar>
  </cost>
  </time>
  </times>
  </entry>
  </entries>
  </prices>
- <prices>
  <priority>2</priority>
- <entries>
- <entry>
  <price-DayType>monday</price-DayType>
- <spacetype>
  <type>compact</type>
  </spacetype>
- <times>
- <time>
  <timeInterval>26</timeInterval>
- <cost>
  <usDollar>45.59</usDollar>
  </cost>
  </time>
  </times>
- <times>
- <time>
  <timeInterval>42</timeInterval>
- <cost>
  <usDollar>4.20</usDollar>
  </cost>
  </time>
  </times>
- <times>
- <time>
```

```
  <timeInterval>134</timeInterval>
- <cost>
  <usDollar>4.51</usDollar>
  </cost>
  </time>
  </times>
  </entry>
- <entry>
  <price-DayType>holiday</price-DayType>
- <spacetype>
  <type>compact</type>
  </spacetype>
- <times>
- <time>
  <timeInterval>26</timeInterval>
- <cost>
  <usDollar>427.00</usDollar>
  </cost>
  </time>
  </times>
- <times>
- <time>
  <timeInterval>45</timeInterval>
- <cost>
  <usDollar>4.50</usDollar>
  </cost>
  </time>
  </times>
- <times>
- <time>
  <timeInterval>251</timeInterval>
- <cost>
  <usDollar>4.51</usDollar>
  </cost>
  </time>
  </times>
  </entry>
  </entries>
  </prices>
- <prices>
- <entries>
- <entry>
  <price-DayType>monday</price-DayType>
- <spacetype>
  <type>compact</type>
  </spacetype>
- <times>
- <time>
  <timeInterval>26</timeInterval>
- <cost>
  <usDollar>45.59</usDollar>
  </cost>
  </time>
  </times>
- <times>
- <time>
  <timeInterval>42</timeInterval>
- <cost>
  <usDollar>4.20</usDollar>
  </cost>
  </time>
  </times>
- <times>
- <time>
  <timeInterval>134</timeInterval>
- <cost>
  <usDollar>4.51</usDollar>
  </cost>
  </time>
  </times>
  </entry>
```

```
- <entry>
  <price-DayType>holiday</price-DayType>
- <spacetype>
  <type>compact</type>
  </spacetype>
- <times>
- <time>
  <timeInterval>26</timeInterval>
- <cost>
  <usDollar>427.00</usDollar>
  </cost>
  </time>
  </times>
- <times>
- <time>
  <timeInterval>45</timeInterval>
- <cost>
  <usDollar>4.50</usDollar>
  </cost>
  </time>
  </times>
- <times>
- <time>
  <timeInterval>251</timeInterval>
- <cost>
  <usDollar>4.51</usDollar>
  </cost>
  </time>
  </times>
  </entry>
  </entries>
- <discount>
  <discountpct>20.0</discountpct>
  <reason>senior</reason>
  </discount>
  </prices>
  </facilityinfo>
  </vendorinventorydynamic>
  </n:park>
  >

>
  <
```


Requests and Responses

The PVI will issue requests either to parking vendors or to the MDBI. Neither the parking vendors nor the MDBI can issue requests. They only respond to existing requests. The MMTP does not issue requests to the PVI.

All requests and responses have a header containing the following information:

Source of request or response	examples are PVI, Vendor, MDBI, MMTP
Destination of request or response	examples are PVI, Vendor, MDBI, MMTP
Success or failure indicator	true or false
Request	Vendor list Vendor inventory static
Request type	request, response
Action	read or write (write is a store)

If message is not a request or response the Request type should be blank.

The main body of the message appears immediately after the header. For requests it is the required parameters. For responses, it is the response body.

A request for vendors sent to the MDBI returns a list of vendors. A request for Vendor inventory given vendor id returns the inventory of all facilities for that vendor.

The Time To Live should not be infinite. A string property called “SenderIP” should contain the IP address of the sender as a string (e.g. 125.30.35.111).

Below is an example of a response returning all the vendors:


```
<?xml version="1.0" encoding="UTF-8" ?>
- <n:park xmlns:n="http://www.dummy-UPPParking-address">
- <header>
  <type>response</type>
  <source>MDBI</source>
  <dest>PVI</dest>
  <action></action>
  </header>
  <success>true</success>
  <responsetype>vendors</responsetype>
- <vendor>
  <vid>83483</vid>
  <vname>sf park</vname>
  <JMSQPVI2VENDOR>jmsqname</JMSQPVI2VENDOR>
  </vendor>
- <vendor>
  <vid>v834038</vid>
  <vname>another vendor</vname>
  <JMSQPVI2VENDOR>jmsqname2</JMSQPVI2VENDOR>
</vendor>
</n:park>
```


JMS Messages between Data Interface and Parking Vendors

Vendors must receive messages from the PVI. Below is an example of a request sent by the PVI to the Vendors. **Vendorinventorystatic** is the only type of request the PVI sends to the parking vendors.


```
  <?xml version="1.0" encoding="UTF-8" ?>
- <n:park xmlns:n="http://www.dummy-UPPParking-address">
- <header>
  <type>request</type>
  <source>PVI</source>
  <dest>VENDOR</dest>
  <action />
  </header>
  <request>vendorinventorystatic</request>
  </n:park>
```


Receipt of such a message should cause the vendors to reply with an XML vendorinventorystatic. Vendorinventorystatic contains all vendor facilities in the static format message as shown in this document. This should be published through the pFromVendor2PVI topic. A parking zone is considered a type of facility. The JMSCorrelationID should be returned in the response. The vendors should set the JMS Time to Live to 24 hours for static data.

Dynamic format messages should also use the pFromVendor2PVI topic. These messages are not requested but are sent when vendors report changes in pricing or availability. For Dynamic messages the Time to Live should be 5 minutes. A string property called "SenderIP" should contain the IP address of the sender as a string (e.g. 125.30.35.111). An optional statusBlock may be included in the response to indicate an error. This has an Error-NotificationLevel that can be either "information", "warning", or "error"

Differences from the ATIS Standard

ATIS Items Not Supported

Type ParkingLotInformation
Head , MessageHeader, generalStatus, furtherData
Head contains fields that are not applicable to parking such as Pedigree, Language, Charset, Table, Confidence and Urgency.

databaseIdentity is not applicable to the parking application.

The MessageHeader does have some similarities to the header mentioned earlier in this document but uses TMDD Message Number. GeneralStatus is used for referencing ITIS code. furtherData is for an optional URL link.

The following are additional types and fields not in the standard that were added for UPP Parking. These are candidates for inclusion in the ATIS standard.

Type ParkingLotDynamic is a new type as a subset of parking data. This is shorter than ParkingLotInformation which is used for static data.

Type Vendors contains vendor name, id, and the jms queue name toward the vendor.

Type ParkingVendorInventory contains all the parking facilities for a vendor.

Type PaymentOptions and PaymentMethods were added for UPP Parking.

Type AdditionalInfo was added to support the MMTP.
Adds the following elements:
ownershipAgencyType, structureType, peakUsageTimes,
contactphoneOnsite, constactphone2, contactphoneCustSvc, contactFax,
contaactphoneSecurity, contactphoneTTY, contactEmail,
contactWebsite1, contactWebsite2,
numberofspaces (vacancy by structure type),
hastransitagency, realtimeinfoavailable, haschargingport, hasemergencycallbox,
paymentdiscountAAA, paymentdiscountSenior, paymentdiscountCorporate,

paymentdiscountGroup, paymentDiscountHybrid,
paycashieratexit, kioskpaystations, paycahinsertslots,
epay, payonline, servicetypes,
reservAvailable, reservMethod, reservPhone, reservOnline, reservAddInfo,
lockersize, lockercost, lockerqty, maxoccupancy,additionaldesc, associatedfiles

Pricing for special events is handled as a PriceScheduleEntry.

The header that is used differs from the header in the ATIS standard. The header defined here has request type, action type, source, and destination.

Appendix E. UPP Parking XML Schema File

```
<?xml version="1.0" encoding="UTF-8"?>
<!-- UPP Parking-->
<xsd:schema
        xmlns:lrms="http://www.dummy-lrms-address"
        xmlns:pkg= "http://www.dummy-UPPParking-address"
        targetNamespace="http://www.dummy-UPPParking-address"
        xmlns:tmdd="http://www.dummy-tmdd-address"
        xmlns:tcip="http://www.dummy-tcip-address"
        xmlns:xsd="http://www.w3.org/2001/XMLSchema">

        <xsd:import namespace="http://www.dummy-lrms-address"  schemaLocation="LRMS.xsd" />

        <xsd:element name="park" type="pkg:ATISMessage"/>

        <xsd:complexType name="ATISMessage">
                <xsd:sequence>
                        <xsd:element name="timestamp"  type="xsd:dateTime" />
                        <xsd:element name="header" type="pkg:MessageHeader"/>
                        <xsd:choice>
                                <xsd:group ref="pkg:InformationRequest"/>
                                <xsd:group ref="pkg:InformationResponse"/>
                                <xsd:element name="vendorinventorydynamic"  type="pkg:ParkingVendorInventoryDynamic"/>
                        </xsd:choice>
                </xsd:sequence>
        </xsd:complexType>

        <xsd:complexType name="Vendor">
                <xsd:sequence>
                        <xsd:element name="vid"            type="xsd:int"/>
                        <xsd:element name="vname"          type="xsd:string"/>
                        <xsd:element name="JMSQPVI2VENDOR" type="xsd:string"/>
                </xsd:sequence>
        </xsd:complexType>

        <xsd:group name="InformationRequest">
                <xsd:sequence>
                        <xsd:element name="request">
                                <xsd:simpleType>
                                        <xsd:restriction base="xsd:string">
                                                <xsd:enumeration value="vendors"/>
                                                <xsd:enumeration value="vendorinventorystatic"/>
                                        </xsd:restriction>
                                </xsd:simpleType>
                        </xsd:element>
```

```
                <xsd:element name="param1" type="xsd:string" minOccurs="0"/>
                <xsd:element name="subscription" type="pkg:SubscribeForm"  minOccurs="0"/>
        </xsd:sequence>
</xsd:group>

<xsd:group name="InformationResponse">
        <xsd:sequence>
                <xsd:element name="success" type="xsd:boolean" minOccurs="0"/>
                <xsd:element name="responsetype">
                        <xsd:simpleType>
                                <xsd:restriction base="xsd:string">
                                        <xsd:enumeration value="vendors"/>
                                        <xsd:enumeration value="vendorinventorystatic"/>
                                </xsd:restriction>
                        </xsd:simpleType>
                </xsd:element>
                <xsd:element name="statusBlock" type="pkg:StatusBlock" minOccurs="0"/>
                <xsd:sequence>
                        <xsd:choice>
                                <xsd:element name="vendor" type="pkg:Vendor" minOccurs="0" maxOccurs="unbounded"/>
                                <xsd:element name="vendorinventorystatic"  type="pkg:ParkingVendorInventoryStatic"/>
                        </xsd:choice>
                </xsd:sequence>
        </xsd:sequence>
</xsd:group>

<xsd:complexType name="MessageHeader">
        <xsd:sequence>
                <xsd:element name="type">
                        <xsd:simpleType>
                                <xsd:restriction base="xsd:string">
                                        <xsd:enumeration value="request"/>
                                        <xsd:enumeration value="response"/>
                                        <xsd:enumeration value=""/>
                                </xsd:restriction>
                        </xsd:simpleType>
                </xsd:element>

                <xsd:element name = "source"  type="xsd:string" />
                <xsd:element name="dest" type="xsd:string"/>

                <xsd:element name="action"  minOccurs="0">
                        <xsd:simpleType>
                                <xsd:restriction base="xsd:string">
                                        <xsd:enumeration value=""/>
                                        <xsd:enumeration value="store"/>
                                        <xsd:enumeration value="read"/>
                                </xsd:restriction>
                        </xsd:simpleType>
                </xsd:element>
        </xsd:sequence>
```

```
</xsd:complexType>

<xsd:complexType name="ParkingVendorInventoryStatic">
        <xsd:sequence>
                <xsd:element name="vendorid" type="xsd:integer"/>
                <xsd:element name="vendorname" type="xsd:string"/>
                <xsd:element name="facilityinfo"   type="pkg:ParkingLotInformation"  maxOccurs="unbounded"/>
        </xsd:sequence>
</xsd:complexType>

<xsd:complexType name="ParkingVendorInventoryDynamic">
        <xsd:sequence>
                <xsd:element name="vendorid" type="xsd:integer"/>
                <xsd:element name="vendorname" type="xsd:string"/>
                <xsd:element name="facilityinfo"   type="pkg:ParkingLotDynamic"  maxOccurs="unbounded"/>
        </xsd:sequence>
</xsd:complexType>

<xsd:complexType name="StatusBlock">
        <xsd:sequence>
                <xsd:element name="level" type="pkg:Error-NotificationLevel"/>
        </xsd:sequence>
</xsd:complexType>

<xsd:simpleType name="Error-NotificationLevel">
        <xsd:annotation>
                <xsd:appinfo>
                        information (0)
                        warning (1)
                        error (2)
                </xsd:appinfo>
                <xsd:documentation>
                        values to 127 reserved for std use
                        values 128 to 255 reserved for local use
                </xsd:documentation>
        </xsd:annotation>
        <xsd:union>
                <xsd:simpleType>
                        <xsd:restriction base="xsd:unsignedInt">
                                <xsd:minInclusive value="0"/>
                                <xsd:maxInclusive value="2"/>
                        </xsd:restriction>
                </xsd:simpleType>
                <xsd:simpleType>
                        <xsd:restriction base="xsd:string">
                                <xsd:enumeration value="information"/>
                                <xsd:enumeration value="warning"/>
                                <xsd:enumeration value="error"/>
                        </xsd:restriction>
                </xsd:simpleType>
        </xsd:union>
```

```
</xsd:simpleType>

<xsd:complexType name="SubscribeForm">
        <xsd:sequence>
                <xsd:element name="action" type="pkg:SubscribeType"  minOccurs="0"/>
        </xsd:sequence>
</xsd:complexType>

<xsd:simpleType name="SubscribeType">
        <xsd:annotation>
                <xsd:appinfo>
                        new (1)
                        update replace (2)
                        cancel (3)
                        cancelAllPrior (4)
                </xsd:appinfo>
        </xsd:annotation>
        <xsd:union>
                <xsd:simpleType>
                        <xsd:restriction base="xsd:unsignedInt">
                                <xsd:minInclusive value="1"/>
                                <xsd:maxInclusive value="4"/>
                        </xsd:restriction>
                </xsd:simpleType>
                <xsd:simpleType>
                        <xsd:restriction base="xsd:string">
                                <xsd:enumeration value="new"/>
                                <xsd:enumeration value="update replace"/>
                                <xsd:enumeration value="cancel"/>
                                <xsd:enumeration value="cancelAllPrior"/>
                        </xsd:restriction>
                </xsd:simpleType>
        </xsd:union>
</xsd:simpleType>

<xsd:complexType name="Tail">
        <xsd:sequence maxOccurs="32">
                <xsd:element name="entry">
                        <xsd:complexType>
                                <xsd:sequence>
                                        <xsd:element name="tag">
                                                <xsd:simpleType>
                                                        <xsd:restriction base="xsd:string">
                                                                <xsd:minLength value="1"/>
                                                                <xsd:maxLength value="20"/>
                                                        </xsd:restriction>
                                                </xsd:simpleType>
                                        </xsd:element>
                                        <xsd:element name="value">
                                                <xsd:simpleType>
                                                        <xsd:restriction base="xsd:string">
```

```
                                                                        <xsd:minLength value="1"/>
                                                                        <xsd:maxLength value="200"/>
                                                                </xsd:restriction>
                                                        </xsd:simpleType>
                                                </xsd:element>
                                        </xsd:sequence>
                                </xsd:complexType>
                        </xsd:element>
                        <!-- sets of addtional named data values -->
                </xsd:sequence>
        </xsd:complexType>

        <xsd:simpleType name = "Int-latitude32">
                <xsd:restriction base = "xsd:int">
                        <xsd:maxInclusive value = "+90000000"/>
                        <xsd:minInclusive value = "-90000000"/>
                </xsd:restriction>
        </xsd:simpleType>

        <xsd:simpleType name = "Int-loccode16">
                <xsd:restriction base = "xsd:unsignedShort">
                        <xsd:minInclusive value = "1"/>
                </xsd:restriction>
        </xsd:simpleType>

        <xsd:simpleType name = "Int-loctable8">
                <xsd:restriction base = "xsd:unsignedByte">
                        <xsd:maxInclusive value = "63"/>
                        <xsd:minInclusive value = "1"/>
                </xsd:restriction>
        </xsd:simpleType>

        <xsd:simpleType name = "Int-longitude32">
                <xsd:restriction base = "xsd:int">
                        <xsd:maxInclusive value = "+180000000"/>
                        <xsd:minInclusive value = "-180000000"/>
                </xsd:restriction>
        </xsd:simpleType>

        <xsd:simpleType name = "Latitude">
                <xsd:restriction base = "pkg:Int-latitude32"/>
        </xsd:simpleType>

        <xsd:simpleType name = "Longitude">
                <xsd:restriction base = "pkg:Int-longitude32"/>
        </xsd:simpleType>

        <xsd:simpleType name="Percent">
                <xsd:restriction base="xsd:unsignedByte">
                        <xsd:maxInclusive value="100"/>
                </xsd:restriction>
```

```
</xsd:simpleType>

<xsd:simpleType name="Date">
        <xsd:annotation>
                <xsd:documentation>
                        format as: YYYYMMDD where
                        YYYY  the year,  in common era units
                        MM  the month,  range 01 to 12
                        DD the day,  range 01 to 31
                        use zero for MM and DD when not applicable
                </xsd:documentation>
        </xsd:annotation>
        <xsd:restriction base="xsd:string">
                <xsd:length value="8"/>
        </xsd:restriction>
</xsd:simpleType>

<xsd:simpleType name="Time">
        <xsd:annotation>
                <xsd:documentation>
                        Format:  HHMMSSssss
                        Valid times using 24 hour notation.
                        HH=00 through 23; MM=00 through 59;
                        SS=00 through 59; 00 if NA
                        ssss=0000 through 9999.
                        Use SS= 60 or 61 for leap seconds
                        HH represents hours,  MM minutes,  SS seconds,
                        and ssss decimal seconds to whatever number
                        of significant digits is required  (up to four)
                </xsd:documentation>
        </xsd:annotation>
        <xsd:restriction base="xsd:string">
                <xsd:minLength value="6"/>
                <xsd:maxLength value="10"/>
        </xsd:restriction>
</xsd:simpleType>

<xsd:simpleType name="TimeOffset">
        <xsd:annotation>
                <xsd:documentation>
                        Valid time offset using signed 12 hour notation of the form HHMM
                        HH=00 through 23; MM=00 through 59;
                </xsd:documentation>
        </xsd:annotation>
        <xsd:restriction base="xsd:short">
                <xsd:minInclusive value="-1200"/>
                <xsd:maxInclusive value="1200"/>
        </xsd:restriction>
</xsd:simpleType>

<xsd:complexType name="TimePair">
```

```
        <xsd:sequence>
                <xsd:element name="date" type="pkg:Date"  minOccurs="0"/>
                <xsd:element name="start" type="pkg:Time"/>
                <xsd:element name="end" type="pkg:Time"/>
        </xsd:sequence>
</xsd:complexType>

<xsd:complexType name="DateTimePair">
        <xsd:sequence>
                <xsd:element name="date" type="pkg:Date"/>
                <xsd:element name="time" type="pkg:Time"/>
                <xsd:element name="offset" type="pkg:TimeOffset"  minOccurs="0"/>
        </xsd:sequence>
</xsd:complexType>

<xsd:simpleType name="Price-DayType">
        <xsd:annotation>
                <xsd:appinfo>
                        holiday (0)
                        sunday (1)
                        monday (2)
                        tuesday (3)
                        wednesday (4)
                        thursday (5)
                        friday (6)
                        saturday (7)
                        all (8)
                        mondayToFriday (9)
                        mondayToFridayExceptHolidays (10)
                        weekend (11)
                        mondayToThursday (12)
                        unknown (255) -- LOCAL_CONTENT
                </xsd:appinfo>
                <xsd:documentation>
                        values to 127 reserved for std use
                        values 128 to 254 reserved for local use
                </xsd:documentation>
        </xsd:annotation>
        <xsd:union>
                <xsd:simpleType>
                        <xsd:restriction base="xsd:unsignedInt">
                                <xsd:minInclusive value="0"/>
                                <xsd:maxInclusive value="255"/>
                        </xsd:restriction>
                </xsd:simpleType>
                <xsd:simpleType>
                        <xsd:restriction base="xsd:string">
                                <xsd:enumeration value="holiday"/>
                                <xsd:enumeration value="sunday"/>
                                <xsd:enumeration value="monday"/>
                                <xsd:enumeration value="tuesday"/>
```

```
                                <xsd:enumeration value="wednesday"/>
                                <xsd:enumeration value="thursday"/>
                                <xsd:enumeration value="friday"/>
                                <xsd:enumeration value="saturday"/>
                                <xsd:enumeration value="all"/>
                                <xsd:enumeration value="mondayToFriday"/>
                                <xsd:enumeration value="mondayToFridayExceptHolidays"/>
                                <xsd:enumeration value="weekend"/>
                                <xsd:enumeration value="mondayToThursday"/>
                                <xsd:enumeration value="unknown"/>
                        </xsd:restriction>
                </xsd:simpleType>
        </xsd:union>
</xsd:simpleType>

<xsd:simpleType name="PI-ParkingType">
        <xsd:annotation>
                <xsd:documentation>
                        open         (1),   -- Open lot
                        garage       (2),
                        permit       (3),
                        contract     (4),
                        free         (5),
                        pay          (6),
                        other        (7)
                        8-149       reserved
                        150-255     local use
                </xsd:documentation>
        </xsd:annotation>
        <xsd:restriction base="xsd:int">
                <xsd:minInclusive value="0"/>
                <xsd:maxInclusive value="255"/>
        </xsd:restriction>
</xsd:simpleType>

<xsd:simpleType name="PI-ParkingFacID">
        <xsd:restriction base="xsd:unsignedShort">
                <xsd:minInclusive value="1"/>
                <xsd:maxInclusive value="65535"/>
        </xsd:restriction>
</xsd:simpleType>

<xsd:simpleType name="PI-ParkingAvailability">
        <xsd:restriction base="xsd:int"/>
</xsd:simpleType>

<xsd:simpleType name="Day-of-week-item">
        <xsd:annotation>
                <xsd:appinfo>
                        holiday (0)
                        sunday (1)
```

```
                        monday (2)
                        tuesday (3)
                        wednesday (4)
                        thursday (5)
                        friday (6)
                        saturday (7)
                </xsd:appinfo>
        </xsd:annotation>
        <xsd:union>
                <xsd:simpleType>
                        <xsd:restriction base="xsd:int">
                                <xsd:minInclusive value="0"/>
                                <xsd:maxInclusive value="7"/>
                        </xsd:restriction>
                </xsd:simpleType>
                <xsd:simpleType>
                        <xsd:restriction base="xsd:string">
                                <xsd:enumeration value="holiday"/>
                                <xsd:enumeration value="sunday"/>
                                <xsd:enumeration value="monday"/>
                                <xsd:enumeration value="tuesday"/>
                                <xsd:enumeration value="wednesday"/>
                                <xsd:enumeration value="thursday"/>
                                <xsd:enumeration value="friday"/>
                                <xsd:enumeration value="saturday"/>
                        </xsd:restriction>
                </xsd:simpleType>
        </xsd:union>
</xsd:simpleType>

<xsd:simpleType name="Day-of-week">
        <xsd:list itemType="pkg:Day-of-week-item"/>
</xsd:simpleType>

<xsd:complexType name="ComplexTime">
        <xsd:sequence>
                <xsd:element name="start" type="pkg:DateTimePair"  minOccurs="0"/>
                <!-- the time when the entire item begins -->
                <xsd:element name="end" type="pkg:DateTimePair"  minOccurs="0"/>
                <!-- the time when the entire item is over -->
                <xsd:element name="weekly"  minOccurs="0">
                        <xsd:complexType>
                                <xsd:sequence minOccurs="1" maxOccurs="8">
                                        <xsd:element name="weekly-item">
                                                <xsd:complexType>
                                                        <xsd:sequence>
                                                                <xsd:element name="day" type="pkg:Day-of-week"/>
                                                                <xsd:element name="times" type="pkg:TimePair"/>
                                                        </xsd:sequence>
                                                </xsd:complexType>
                                        </xsd:element>
```

```
                        </xsd:sequence>
                    </xsd:complexType>
                </xsd:element>
                <xsd:element name="occurrences"  minOccurs="0">
                    <xsd:complexType>
                        <xsd:sequence minOccurs="1" maxOccurs="32">
                            <xsd:element name="occurrence">
                                <xsd:complexType>
                                    <xsd:sequence>
                                        <xsd:element name="date" type="pkg:Date"/>
                                        <xsd:element name="times" type="pkg:TimePair"  minOccurs="0"/>
                                    </xsd:sequence>
                                </xsd:complexType>
                            </xsd:element>
                        </xsd:sequence>
                    </xsd:complexType>
                </xsd:element>
                <!-- xsd:element name="furtherData" type="URL-Link"  minOccurs="0"/  -->
                <!-- used to convey any schedule graphics -->
        </xsd:sequence>
    </xsd:complexType>

    <xsd:complexType name="Cost">
        <xsd:choice>
                <xsd:element name="usDollar">
                    <xsd:simpleType>
                        <xsd:restriction base="xsd:decimal">
                            <xsd:fractionDigits value="2"/>
                            <xsd:minInclusive value="0"/>
                            <xsd:maxInclusive value="1000000"/>
                        </xsd:restriction>
                    </xsd:simpleType>
                </xsd:element>
                <xsd:element name="usPenny">
                    <xsd:simpleType>
                        <xsd:restriction base="xsd:integer">
                            <xsd:minInclusive value="0"/>
                            <xsd:maxInclusive value="100000000"/>
                        </xsd:restriction>
                    </xsd:simpleType>
                </xsd:element>
                <xsd:element name="canDollar">
                    <xsd:simpleType>
                        <xsd:restriction base="xsd:decimal">
                            <xsd:fractionDigits value="2"/>
                            <xsd:minInclusive value="0"/>
                            <xsd:maxInclusive value="1000000"/>
                        </xsd:restriction>
                    </xsd:simpleType>
                </xsd:element>
                <xsd:element name="canPenny">
```

```
                        <xsd:simpleType>
                                <xsd:restriction base="xsd:integer">
                                        <xsd:minInclusive value="0"/>
                                        <xsd:maxInclusive value="100000000"/>
                                </xsd:restriction>
                        </xsd:simpleType>
                </xsd:element>
                <xsd:element name="mexPeso">
                        <xsd:simpleType>
                                <xsd:restriction base="xsd:integer">
                                        <xsd:minInclusive value="0"/>
                                        <xsd:maxInclusive value="1000000"/>
                                </xsd:restriction>
                        </xsd:simpleType>
                </xsd:element>
        </xsd:choice>
</xsd:complexType>

<xsd:simpleType name="TimeInterval">
        <xsd:annotation>
                <xsd:documentation>
                        Units of minutes
                        use 0 for "unknown"
                        use 65535 for "forever"
                </xsd:documentation>
        </xsd:annotation>
        <xsd:restriction base="xsd:unsignedShort"/>
</xsd:simpleType>

<xsd:complexType name="TransitAgency">
        <xsd:sequence maxOccurs="unbounded">
                <xsd:element name="agency" type="xsd:string"/>
        </xsd:sequence>
</xsd:complexType>

<xsd:complexType name="ParkingAccess">
        <xsd:sequence>
                <xsd:element name="name"  type="xsd:string" />
                <xsd:element name="accesstype">
                        <xsd:simpleType>
                                <xsd:restriction base="xsd:string">
                                        <xsd:enumeration value="entrance"/>
                                        <xsd:enumeration value="exit"/>
                                </xsd:restriction>
                        </xsd:simpleType>
                </xsd:element>
                <xsd:element name="accessfeature">
                        <xsd:simpleType>
                                <xsd:restriction base="xsd:string">
                                        <xsd:enumeration value="stair"/>
                                        <xsd:enumeration value="escalator"/>
```

```
                                        <xsd:enumeration value="elevator"/>
                                </xsd:restriction>
                        </xsd:simpleType>
                </xsd:element>
                <xsd:element name="addlInfo" type="xsd:string" minOccurs="0"/>
        </xsd:sequence>
</xsd:complexType>

<xsd:complexType name="TimePriceInterval">
        <xsd:sequence>
                <xsd:element name="timeInterval" type="pkg:TimeInterval"/>
                <!-- the duration the rate below is valid for -->
                <xsd:element name="cost" type="pkg:Cost"/>
                <!-- the rate for this duration -->
        </xsd:sequence>
</xsd:complexType>

<xsd:complexType name="PriceScheduleEntry">
        <xsd:sequence>
                <xsd:element name="price-DayType" type="pkg:Price-DayType"/>
                <!-- moved here for UPPParking -->
                <xsd:element name="spacetype"    type="pkg:ParkingSpaceTypes"/>
                <xsd:element name="time" type="pkg:TimePair"  minOccurs="0"/>
                <!-- a range of times over which the next
         two items are vaild -->
                <xsd:element name="priceFirstPayment" type="pkg:Cost"  minOccurs="0"/>
                <!-- the cost of entry the first time,  or min cost -->
                <xsd:element name="priceMaximum" type="pkg:Cost"  minOccurs="0"/>
                <!-- typically the daily max price -->
                <xsd:element name="times"  minOccurs="0">
                        <xsd:complexType>
                                <xsd:sequence minOccurs="1" maxOccurs="100">
                                        <xsd:element name="time" type="pkg:TimePriceInterval"/>
                                        <!-- used to convey prices vs time data such as discounted parking if entry before 7 AM -
->
                                </xsd:sequence>
                        </xsd:complexType>
                </xsd:element>
        </xsd:sequence>
</xsd:complexType>

<xsd:complexType name="PriceSchedule">
        <xsd:sequence>
                <xsd:element name="start" type="pkg:DateTimePair"  minOccurs="0"/>
                <xsd:element name="end" type="pkg:DateTimePair"  minOccurs="0"/>
                <xsd:element name="entries">
                        <xsd:complexType>
                                <xsd:sequence minOccurs="1" maxOccurs="100">
                                        <xsd:element name="entry" type="pkg:PriceScheduleEntry"/>
                                </xsd:sequence>
                        </xsd:complexType>
```

```
                </xsd:element>
        </xsd:sequence>
</xsd:complexType>

<xsd:complexType name = "StreetInfo">
        <xsd:choice>
                <xsd:sequence>
                        <xsd:element name = "prefix" type = "xsd:string" minOccurs = "0" maxOccurs = "4"/>
                        <xsd:element name = "name" type = "xsd:string"/>
                        <xsd:element name = "suffix" type = "xsd:string" minOccurs = "0" maxOccurs = "4"/>
                </xsd:sequence>
                <xsd:element name = "streetIndex" type = "xsd:integer"/>
        </xsd:choice>
</xsd:complexType>

<xsd:complexType name="IdentityOrLocation">
        <xsd:sequence>
                <xsd:element name="location" type="lrms:LocationReference"/>
                <!--  The following element is part of the ATIS standard but is not supported:
         <xs:element name="dbIdentity" type="DatabaseIdentity" />
         -->
        </xsd:sequence>
</xsd:complexType>

<!--the following is in ATIS_Rev66.doc .....Instead of this one,
- we are using the LocationReference defined in LRMS.xsd
-
-<xsd:complexType name="LocationReference" >
-       <xsd:annotation>
-          <xsd:documentation>
-             the ModelProfile has been removed
-          </xsd:documentation>
-       </xsd:annotation>
-       <xsd:choice>
-          <xsd:element name="geometry" type="GeometryProfile" />
-          <xsd:element name="geocoordinate" -type="GeographicCoordinate" />
-          <xsd:element name="grid" type="GridProfile" />
-          <xsd:element name="linearReferencing" -type="LinearReferenceProfile" />
-          <xsd:element name="crossStreets" type="ISP-Vehicle" />
-           was: CrossStreetsProfile
-          <xsd:element name="address" type="AddressProfile" />
-          <xsd:element name="pubgrid" type="PublicGridProfile" -/>
-       </xsd:choice>
-</xsd:complexType>
-
-
-->

<xsd:simpleType name="PI-ParkingRates">
        <xsd:restriction base="xsd:string">
                <xsd:minLength value="0"/>
```

```
                <xsd:maxLength value="1000"/>
        </xsd:restriction>
</xsd:simpleType>

<xsd:simpleType name="PI-ParkingSpacesTotal">
        <xsd:restriction base="xsd:unsignedShort"/>
</xsd:simpleType>

<xsd:simpleType name="PI-ParkingVehicleClass">
        <xsd:restriction base="xsd:int"/>
</xsd:simpleType>

<xsd:simpleType name="ParkingSpaceKind">
        <xsd:annotation>
                <xsd:appinfo>
                        unknown (0) -- use for general types when none is known
                        auto (1) -- regular sized or typical spaces
                        compact (2)
                        large (3)
                        handicapped (4) -- and all disabled types
                        curbside (5)
                        carpool (6)
                        carpoolHours (7) -- reserved for carpoolers during certain hours
                        midDay (8) -- reserved for mid-day users  (may be certain hours)
                        electricVehicles (9) -- electric vehicles  (adjacent to charging station)
                        motorcycle (10)
                        bicycle (11) -- bicycle spaces/lockers/racks
                        loadingOnly (12)
                        reserved (13)
                        private (14)
                        valet (15)
                        shortTermOnly (16) -- use for 15 min parking ,
                        truck (17)
                        carAndTrailer (18)
                        semiTrailer (19)
                        bus (20)
                        outside (21) -- commonly used for parking where
                        -- oversized vehicles can not proceed
                        officialVehicles (22)
                        cityCarShare (23) -- LOCAL_CONTENT
                </xsd:appinfo>
                <xsd:documentation>
                        values to 127 reserved for std use
                        values 128 to 255 reserved for local use
                </xsd:documentation>
        </xsd:annotation>
        <xsd:union>
                <xsd:simpleType>
                        <xsd:restriction base="xsd:unsignedInt">
                                <xsd:minInclusive value="0"/>
                                <xsd:maxInclusive value="23"/>
```

```
                        </xsd:restriction>
                </xsd:simpleType>
                <xsd:simpleType>
                        <xsd:restriction base="xsd:string">
                                <xsd:enumeration value="unknown"/>
                                <xsd:enumeration value="auto"/>
                                <xsd:enumeration value="compact"/>
                                <xsd:enumeration value="large"/>
                                <xsd:enumeration value="handicapped"/>
                                <xsd:enumeration value="curbside"/>
                                <xsd:enumeration value="carpool"/>
                                <xsd:enumeration value="carpoolHours"/>
                                <xsd:enumeration value="midDay"/>
                                <xsd:enumeration value="electricVehicles"/>
                                <xsd:enumeration value="motorcycle"/>
                                <xsd:enumeration value="bicycle"/>
                                <xsd:enumeration value="loadingOnly"/>
                                <xsd:enumeration value="reserved"/>
                                <xsd:enumeration value="private"/>
                                <xsd:enumeration value="valet"/>
                                <xsd:enumeration value="shortTermOnly"/>
                                <xsd:enumeration value="truck"/>
                                <xsd:enumeration value="carAndTrailer"/>
                                <xsd:enumeration value="semiTrailer"/>
                                <xsd:enumeration value="bus"/>
                                <xsd:enumeration value="outside"/>
                                <xsd:enumeration value="officialVehicles"/>
                                <xsd:enumeration value="cityCarShare"/>
                        </xsd:restriction>
                </xsd:simpleType>
        </xsd:union>
</xsd:simpleType>

<xsd:complexType name="ParkingSpaceTypes">
        <xsd:sequence>
                <xsd:element name="type" type="pkg:ParkingSpaceKind"/>
                <xsd:element name="vehicleClass" type="pkg:PI-ParkingVehicleClass"  minOccurs="0"/>
        </xsd:sequence>
</xsd:complexType>

<xsd:complexType name="Entrance">
        <xsd:sequence>
                <xsd:element name="entranceHeight"   type="xsd:int"      />
                <xsd:element name="entranceLocation" type="pkg:StreetInfo"  />
        </xsd:sequence>
</xsd:complexType>

<xsd:simpleType name="Lot-Name">
        <xsd:annotation>
                <xsd:documentation>
                        Name of the Parking Lot
```

```
                </xsd:documentation>
        </xsd:annotation>
        <xsd:restriction base="xsd:string">
                <xsd:minLength value="1"/>
                <xsd:maxLength value="30"/>
        </xsd:restriction>
</xsd:simpleType>

<xsd:simpleType name="PaymentOptions">
        <xsd:restriction base="xsd:string">
                <xsd:enumeration value="unknown"/>
                <xsd:enumeration value="cash"/>
                <xsd:enumeration value="personal check"/>
                <xsd:enumeration value="visa"/>
                <xsd:enumeration value="master card"/>
                <xsd:enumeration value="american express"/>
                <xsd:enumeration value="diners club"/>
                <xsd:enumeration value="other"/>
        </xsd:restriction>
</xsd:simpleType>

<xsd:complexType name="LotInformation">
        <xsd:sequence>
                <xsd:element name="spacesTotal"     type="pkg:PI-ParkingSpacesTotal"  minOccurs="0"/>

                <xsd:element name="lot-Name"        type="pkg:Lot-Name"  minOccurs="0"/>
                <xsd:element name="hoursofOperation" type="pkg:ComplexTime"  minOccurs="0"/>
                <!--   <xsd:element name="rates"           type="pkg:PI-ParkingRates"  minOccurs="0"/> -->
                <xsd:element name="parkingFillTime" type="pkg:DateTimePair"  minOccurs="0"/>

                <!-- the following elements are not part of the ATIS standard   -->
                <xsd:element name="entrance"        type="pkg:Entrance"   minOccurs="0"  maxOccurs="unbounded"/>
                <xsd:element name="paymentOptions"  type="pkg:PaymentOptions"   minOccurs="0"/>
                <xsd:element name="maxTimeLimit"    type="pkg:TimeInterval"  minOccurs="0"/>
        </xsd:sequence>
</xsd:complexType>

<xsd:complexType name="AdditionalInfo">
        <xsd:sequence>
                <xsd:element name="ownershipAgencyType" minOccurs="0">
                        <xsd:simpleType>
                                <xsd:restriction base="xsd:string">
                                        <xsd:enumeration value="public"/>
                                        <xsd:enumeration value="private"/>
                                </xsd:restriction>
                        </xsd:simpleType>
                </xsd:element>

                <xsd:element name="structureType"  minOccurs="0">
                        <xsd:simpleType>
                                <xsd:restriction base="xsd:string">
```

```
                        <xsd:enumeration value="garage"/>
                        <xsd:enumeration value="street level lot"/>
                        <xsd:enumeration value="business parking"/>
                        <xsd:enumeration value="on-street"/>
                </xsd:restriction>
        </xsd:simpleType>
</xsd:element>

<xsd:element name="peakUsageTimes"  minOccurs="0">
        <xsd:simpleType>
                <xsd:restriction base="xsd:string">
                        <xsd:enumeration value="morning peak"/>
                        <xsd:enumeration value="afternoon peak"/>
                        <xsd:enumeration value="evening peak"/>
                </xsd:restriction>
        </xsd:simpleType>
</xsd:element>

<xsd:element name="contactphoneOnsite" type="xsd:string"   minOccurs="0" />
<xsd:element name="contactphone2"      type="xsd:string"   minOccurs="0" />
<xsd:element name="contactphoneCustSvc" type="xsd:string"  minOccurs="0" />
<xsd:element name="contactFax"         type="xsd:string"    minOccurs="0" />
<xsd:element name="contactphoneSecurity" type="xsd:string"  minOccurs="0" />
<xsd:element name="contactphoneTTY"     type="xsd:string"  minOccurs="0" />
<xsd:element name="contactEmail"        type="xsd:string"  minOccurs="0" />
<xsd:element name="contactWebsite1"     type="xsd:string"  minOccurs="0" />
<xsd:element name="contactWebsite2"     type="xsd:string"  minOccurs="0" />

<xsd:element name="numberofspaces" minOccurs="0"   maxOccurs="7">
        <xsd:complexType>
                <xsd:sequence>
                        <xsd:element name="structureType"  >
                                <xsd:simpleType>
                                        <xsd:restriction base="xsd:string">
                                                <xsd:enumeration value="standard spaces"/>
                                                <xsd:enumeration value="assigned spaces"/>
                                                <xsd:enumeration value="monthly spaces"/>
                                                <xsd:enumeration value="handicap spaces"/>
                                                <xsd:enumeration value="motorcycle spaces"/>
                                                <xsd:enumeration value="electric car spaces"/>
                                                <xsd:enumeration value="bicycle rack spaces"/>
                                        </xsd:restriction>
                                </xsd:simpleType>
                        </xsd:element>
                        <xsd:element   name="numspaces"  type="xsd:integer"/>
                </xsd:sequence>
        </xsd:complexType>
</xsd:element>

<xsd:element name="transitagency" type="pkg:TransitAgency" minOccurs="0"/>
```

```
<xsd:element name="realtimeinfoavailable"  minOccurs="0">
        <xsd:simpleType>
                <xsd:restriction base="xsd:string">
                        <xsd:enumeration value="yes"/>
                        <xsd:enumeration value="no"/>
                </xsd:restriction>
        </xsd:simpleType>
</xsd:element>

<xsd:element name="haschargingport"  minOccurs="0">
        <xsd:simpleType>
                <xsd:restriction base="xsd:string">
                        <xsd:enumeration value="yes"/>
                        <xsd:enumeration value="no"/>
                </xsd:restriction>
        </xsd:simpleType>
</xsd:element>

<xsd:element name="hasemergencycallbox"  minOccurs="0">
        <xsd:simpleType>
                <xsd:restriction base="xsd:string">
                        <xsd:enumeration value="yes"/>
                        <xsd:enumeration value="no"/>
                </xsd:restriction>
        </xsd:simpleType>
</xsd:element>

<xsd:element name="parkingaccess"            type="pkg:ParkingAccess" minOccurs="0" maxOccurs="unbounded"/>
<xsd:element name="paymentdiscountAAA"       type="pkg:Cost"  minOccurs="0"/>
<xsd:element name="paymentdiscountSenior"    type="pkg:Cost"  minOccurs="0"/>
<xsd:element name="paymentdiscountCorporate" type="pkg:Cost"  minOccurs="0"/>
<xsd:element name="paymentdiscountGroup"     type="pkg:Cost"  minOccurs="0"/>
<xsd:element name="paymentdiscountHybrid"    type="pkg:Cost"  minOccurs="0"/>

<xsd:element name="paycashieratexit"  minOccurs="0">
        <xsd:simpleType>
                <xsd:restriction base="xsd:string">
                        <xsd:enumeration value="yes"/>
                        <xsd:enumeration value="no"/>
                </xsd:restriction>
        </xsd:simpleType>
</xsd:element>

<xsd:element name="kioskpaystations"  minOccurs="0">
        <xsd:simpleType>
                <xsd:restriction base="xsd:string">
                        <xsd:enumeration value="yes"/>
                        <xsd:enumeration value="no"/>
                </xsd:restriction>
        </xsd:simpleType>
</xsd:element>
```

```
<xsd:element name="paycashinsertslots"  minOccurs="0">
        <xsd:simpleType>
                <xsd:restriction base="xsd:string">
                        <xsd:enumeration value="yes"/>
                        <xsd:enumeration value="no"/>
                </xsd:restriction>
        </xsd:simpleType>
</xsd:element>

<xsd:element name="epay"  minOccurs="0">
        <xsd:simpleType>
                <xsd:restriction base="xsd:string">
                        <xsd:enumeration value="yes"/>
                        <xsd:enumeration value="no"/>
                </xsd:restriction>
        </xsd:simpleType>
</xsd:element>

<xsd:element name="payonline"  minOccurs="0">
        <xsd:simpleType>
                <xsd:restriction base="xsd:string">
                        <xsd:enumeration value="yes"/>
                        <xsd:enumeration value="no"/>
                </xsd:restriction>
        </xsd:simpleType>
</xsd:element>

<xsd:element name="servicetypes"  minOccurs="0"  maxOccurs="3">
        <xsd:simpleType>
                <xsd:restriction base="xsd:string">
                        <xsd:enumeration value="valet"/>
                        <xsd:enumeration value="security"/>
                        <xsd:enumeration value="attendant"/>
                </xsd:restriction>
        </xsd:simpleType>
</xsd:element>

<xsd:element name="reservAvailable" type="xsd:string" minOccurs="0"/>
<xsd:element name="reservMethod"  type="xsd:string" minOccurs="0"/>
<xsd:element name="reservPhone"   type="xsd:string" minOccurs="0"/>
<xsd:element name="reservEmail"   type="xsd:string" minOccurs="0"/>
<xsd:element name="reservOnline"  type="xsd:string" minOccurs="0"/>
<xsd:element name="reservAddInfo" type="xsd:string" minOccurs="0"/>
<xsd:element name="lockersize" type="xsd:string"                minOccurs="0"/>
<xsd:element name="lockercost" type="pkg:Cost"                  minOccurs="0"/>
<xsd:element name="lockerqty"  type="xsd:integer"               minOccurs="0"/>
<xsd:element name="maxoccupancy" type="xsd:integer"             minOccurs="0"/>
<xsd:element name="additionaldesc" type="xsd:string"  minOccurs="0"/>

<xsd:element name="associatedfiles" minOccurs="0"  maxOccurs="unbounded">
```

```
                        <xsd:complexType>
                                <xsd:sequence>
                                        <xsd:element name="description" type="xsd:string" minOccurs="0"/>
                                        <xsd:element name="filename" type="xsd:string"/>
                                        <xsd:element name="base64data" type="xsd:base64Binary"/>
                                </xsd:sequence>
                        </xsd:complexType>
                </xsd:element>
        </xsd:sequence>
</xsd:complexType>

<xsd:element name="transitagency" type="pkg:TransitAgency"/>

<xsd:element name="realtimeinfoavailable">
        <xsd:simpleType>
                <xsd:restriction base="xsd:string">
                        <xsd:enumeration value="yes"/>
                        <xsd:enumeration value="no"/>
                </xsd:restriction>
        </xsd:simpleType>
</xsd:element>

<xsd:element name="haschargingport">
        <xsd:simpleType>
                <xsd:restriction base="xsd:string">
                        <xsd:enumeration value="yes"/>
                        <xsd:enumeration value="no"/>
                </xsd:restriction>
        </xsd:simpleType>
</xsd:element>

<xsd:element name="hasemergencycallbox">
        <xsd:simpleType>
                <xsd:restriction base="xsd:string">
                        <xsd:enumeration value="yes"/>
                        <xsd:enumeration value="no"/>
                </xsd:restriction>
        </xsd:simpleType>
</xsd:element>

<xsd:complexType name="ParkingLotInformation">
        <xsd:sequence>
                <xsd:element name="parkingFacID" type="xsd:int"  />
                <xsd:element name="isForecast"  minOccurs="0">
                        <xsd:simpleType>
                                <xsd:restriction base="xsd:boolean"/>
                        </xsd:simpleType>
                </xsd:element>
                <!-- forecast or predicted period -->
                <xsd:element name="coverageTime" type="pkg:ComplexTime"  minOccurs="0"/>
                <xsd:element name="forecastExpires" type="pkg:DateTimePair"  minOccurs="0"/>
```

```
                        <xsd:element name="location" type="lrms:LocationReference"/>

                        <xsd:element name="parkingType" type="pkg:PI-ParkingType"/>

                        <xsd:element name="lotDetail" type="pkg:LotInformation"/>
                        <xsd:element name="moreDetail"  type="pkg:AdditionalInfo" minOccurs="0" />
                        <xsd:element name="prices" type="pkg:PriceSchedule"  minOccurs="0"/>


                        <xsd:element name="tail" type="pkg:Tail"  minOccurs="0"/>

                        <!--  the following are part of the ATIS standard but will not be supported:
                         <xs:element name="messageHeader" type="MessageHeader" />
                         <xs:element name="head" type="Head"  minOccurs="0"/>

                         xs:element name="generalStatus" type="itis:ITIScodesAndText"  minOccurs="0"/>
                         <xs:element name="furtherData" type="URL-Link"  minOccurs="0"/>

                         removed because it is almost duplicate of "location"
                         <xsd:element name="lot-ident" type="pkg:IdentityOrLocation" />
                        -->
                </xsd:sequence>
        </xsd:complexType>

        <!-- ParkingLotDynamic
        -->
        <xsd:complexType name="ParkingLotDynamic">
                <xsd:sequence>
                        <xsd:element name="parkingFacID"         type="xsd:int" />
                        <xsd:element name="percentFull" type="pkg:Percent"  minOccurs="0"/>
                        <xsd:element name="spacesTotal" type="pkg:PI-ParkingSpacesTotal"  minOccurs="0"/>
                        <xsd:element name="availability"    type="pkg:PI-ParkingAvailability"  minOccurs="0"/>
                        <xsd:element name="prices" type="pkg:PriceSchedule"  minOccurs="0"/>
                </xsd:sequence>
        </xsd:complexType>

</xsd:schema>
```