METROPOLITAN
TRANSPORTATION
COMMISSION

Joseph P. Bort MetroCenter
101 Eighth Street
Oakland, CA 94607-4700
TEL 510.817.5700
TTY/TDD 510.817.5769
FAX 510.817.5848
EMAIL info@mtc.ca.gov

Amy Rein Worth, Chair
Cities of Contra Costa County

Dave Cortese, Vice Chair
Santa Clara County

Alicia C. Aguirre
Cities of San Mateo County

Tom Azumbrado
U.S. Department of Housing and Urban Development

Jason Baker
Cities of Santa Clara County

Tom Bates
Cities of Alameda County

David Campos
City and County of San Francisco

Dorene M. Giacopini
U.S. Department of Transportation

Federal D. Glover
Contra Costa County

Scott Haggerty
Alameda County

Anne W. Halsted
San Francisco Bay Conservation and Development Commission

Steve Kinsey
Marin County and Cities

Sam Liccardo
San Jose Mayor's Appointee

Mark Luce
Napa County and Cities

Jake Mackenzie
Sonoma County and Cities

Julie Pierce
Association of Bay Area Governments

Bijan Sartipi
California State Transportation Agency

Libby Schaaf
Oakland Mayor's Appointee

James P. Spering
Solano County and Cities

Adrienne J. Tissier
San Mateo County

Scott Wiener
San Francisco Mayor's Appointee

Steve Heminger
Executive Director

Alix Bockelman
Deputy Executive Director, Policy

Andrew B. Fremier
Deputy Executive Director, Operations

February 26, 2015

INVITATION FOR BID

Letter of Invitation

For Clipper® Site Preparation Services

Dear Bidder:

The Metropolitan Transportation Commission (MTC) invites your firm to respond to this Invitation for Bid (IFB) for:

Clipper® Site Preparation Services

The MTC is soliciting bids for Clipper® site preparation services at various Transit Operator locations which will include the installation of infrastructure to support Clipper® system components.

MTC was created by the California Legislature in 1970 to plan the transportation network for the nine Bay Area counties. MTC functions as both the regional transportation planning agency – a state designation – and, for federal purposes, as the region's Metropolitan Planning Organization. MTC is the Clipper® Program Manager responsible for managing and administering the Clipper® electronic fare collection system on behalf of and in coordination with the participating transit operators. MTC works in close partnership with the transit operators that accept Clipper® for fare payment

This letter, together with the Instructions to Bidders and Bidding Requirements, General Conditions, and Special Conditions, comprise the IFB for this project. Responses to the IFB are to be submitted in accordance with the instructions stated herein.

Bid Submission

Interested Bidders may submit bids on one, all or any combination of site preparation projects. If Bidder intends to bid on two or more projects, a bid form must be submitted for each project. Interested Bidders must submit their bids in sealed envelopes no later than 4:00 p.m. on Wednesday, March 18, 2015.

Bids received after that date and time will not be considered. All bids must be completed and submitted on the enclosed *Appendices B1, B2, B3, B4 and/or B5,* Bid Forms, along with one copy per bidder of *Appendix C*, Reference Form; *Appendix D*, Subcontractors List; *Appendix F*, California Levine Act Statement and *Appendix G*, Insurance Requirements; in order to be considered.

Bidders who do not complete all appendices risk being found non-responsive. A submitted bid shall be considered a firm offer to enter into a contract for the applicable services. Bids shall be considered firm offers to provide the services described for a period of one hundred fifty (150) days from the submittal closing date.

MTC Point of Contact

Bids should be submitted to the MTC Project Manager at the address shown below. All inquiries related to this IFB should be submitted via email to clipperprocurements@mtc.ca.gov.

Michele Gillaspie, Project Manager
Metropolitan Transportation Commission
Joseph P. Bort MetroCenter
101 Eighth Street
Oakland, California 94607-4700

Minimum Qualifications

To be eligible to submit a bid, a Bidder must:

1. Have been regularly engaged in the business of providing similar services for at least one (1) year;
2. Have a sufficient number of qualified employees to guarantee prompt, efficient work;
3. Possess and submit a current and active contractor's license to perform the type of work requested;
4. Have performed successfully, within the last five (5) years, at least five (5) projects of similar nature to the services described herein;
5. Attend the mandatory site walk through; and
6. Register itself and all its subcontractors with the Department of Industrial Relations pursuant to Labor Code section 1725.5 (with limited exceptions from this requirement for bid purposes only under Labor Code section 1771.1(a)) in order to be considered.

Bidders will be required to verify these qualifications prior to the award of contract.

Other Qualifications

In addition to the qualifications and experience of the Bidder, the Bidder must be able to:

1. Perform any mutually agreed upon contractual duties as outlined in the Purchase Order (PO) with MTC within twenty-four (24) calendar days of PO issuance;
2. Clearly communicate problems, observations and suggestions to the MTC Project Manager or designated representative on a regular basis as appropriate;
3. Follow agreed-upon written procedures and the verbal instructions of the MTC Project Manager or designated representative;
4. Comply with all OSHA department requirements, as well as those required by the City of Antioch, the City of Concord, the City of Pinole, the City of Livermore, Contra Costa County and/or any other environmental regulatory agency, as applicable to the project(s) being bid on;

Bidders may be required to verify these qualifications prior to the award of contract.

Notice of Addenda and Requests for Exceptions

Any addenda to this IFB that may be issued by MTC will be posted at http://procurements.mtc.ca.gov/; it is the Bidder's responsibility to check for addenda to this IFB and comply with new or revised requirements that may be stated herein.

Requests for clarification or exception to IFB provisions must be received no later than 4:00 p.m. on March 12, 2015, to guarantee consideration.

Scope of Work and Payment Schedule

Bidder will provide site preparation services at one or more the following project locations:

Bid Form	Transit Operator	Site	Site Address
B-1	Tri Delta Transit	Tri Delta Bus Yard	801 Wilbur Ave Antioch, CA 94509
B-2	The County Connection	County Connection Bus Yard	2477 Arnold Industrial Parkway Concord, CA 94520
B-3	West Cat Site	WestCat Transit Bus Yard	601 Walter Ave Pinole, CA
B-4	Livermore-Amador Valley Transit Authority	Wheels Bus Yard - Rutan Site	1362 Rutan Ct Livermore, CA 94551
		Wheels Bus Yard - Transit Center Site	2500 Railroad Ave Livermore, CA 94551
B-5	Livermore-Amador Valley Transit Authority	Wheels Bus Yard - Atlantis Site	875 Atlantis Ct Livermore, CA 94551

Site preparation services may include, but are not limited to those services detailed in the applicable Scope of Work and Specifications attached as *Appendices A-1, A-2, A-3, A-4, A-5 and A-6*, respectively to this IFB, incorporated herein by this reference. Bidder shall furnish all management, supervision, labor, supplies, materials, equipment, and tools required to perform the required services. Section III of this IFB, Special Conditions, also contains substantive requirements with which you must fully comply in order to guarantee your responsiveness to this IFB.

The contract resulting from this IFB will commence on March 24, 2015 shall be completed by April 17, 2015.

Bidder Selection

Bids will be initially evaluated for responsiveness and adherence to minimum qualifications. In order to ensure superior service, references will be checked, and Bidders may be required to provide additional information verifying their experience.

Each contract, if awarded, will be to the responsible Bidder submitting the lowest responsive bid for each site preparation project as indicated in the "Total Bid Price" space in the applicable Bid Form attached *Appendices B1, B2, B3, B4 and/or B5*, Bid Form. The lowest responsive Bidder will be required to provide certification of insurance within five (5) business days of notice of award. If the lowest responsive Bidder cannot provide the required insurance to MTC within five (5) business days of notice of award, MTC at its sole option may deem that Bidder unresponsive and award to the next lowest responsive and responsible Bidder.

Mandatory Pre-Bid Site Walk-Throughs

A pre-bid site walk-through will be held at each project location at the time and place set out in the Bidder Selection Timetable below. Attendance is mandatory. Bids will not be accepted from Bidders who do not attend the mandatory walk-through for each project location related to their respective bid(s). Note that Bidders intending to submit the Bid Form attached as Appendix B-4 must attend both of the relevant site walk-throughs.

Any unique information offered or arising during the individual site walk-throughs will be compiled and posted to the MTC website in a Q & A format after the Deadline for requests for clarification or exception has passed but at least five (5) working days prior to the Closing date and time for receipt of bids & bid opening.

Bidder Selection Timetable

Mandatory Pre-Bid Site Inspections:		Related Bid Form
9:00 a.m., Wednesday, March 4, 2015	Tri Delta Bus Yard 801 Wilbur Ave., Antioch, CA 94509	B-1
11:00 a.m., Wednesday, March 4, 2015	The County Connection Bus Yard 2477 Arnold Industrial Pkwy., Concord, CA 94520	B-2
1:30 p.m., Wednesday, March 4, 2015	WestCat Bus Yard 601 Walter Ave., Pinole, CA 94564	B-3
9:30 a.m., Thursday, March 5, 2015	LAVTA/Wheels Bus Yard (Rutan Site) 1362 Rutan Ct., Livermore, CA 94551	B-4
11:00 a.m., Thursday, March 5, 2015	LAVTA/Wheels Bus Yard (Transit Ctr. Site) 2500 Railroad Ave., Livermore, CA 94551	B-4
1:30 p.m., Thursday, March 5, 2015	LAVTA/Wheels Bus Yard (Atlantis Site) 875 Atlantis Ct.., Livermore, CA 94551	B-5
4:00 p.m., Thursday, March, 12, 2015	Closing date & time of request for clarifications and exceptions	
4:00 p.m., Wednesday, March 18, 2015	**Closing date & time for receipt of bids & bid opening**	
Tuesday, March 24, 2015	Issuance of Purchase Order	

General Conditions

MTC reserves the right to accept or reject any or all bids submitted, waive minor irregularities in bids and request additional information or revisions to offers.

A signed MTC purchase order mailed or delivered to a particular Bidder shall constitute a binding contract, which incorporates this IFB and its addenda, if any, and all documents

referenced herein, any deviations from the specifications expressly accepted by, and all terms and conditions of the purchase order. General Conditions of the MTC Purchase Order are included in this IFB as *Appendix E.*

If a Bidder wishes to propose a change to any provision of this IFB, the provision and the proposed alternative language must be submitted prior to the closing date for request for clarifications and exceptions listed above. If no such change is requested, the Bidder will be deemed to accept MTC's contract Terms and Conditions as set forth in this IFB. The selected Bidder will be required to maintain insurance coverage, during the term of the contract, at the levels described in *Appendix G.* Bidder agrees to provide the required certificates of insurance providing verification of the minimum insurance requirements listed in *Appendix G*, Insurance Requirements, within five (5) days of MTC's notice to firm that it is the successful Bidder. Requests to change MTC's insurance requirements should be submitted on or prior to the closing date for receipt of requests for clarifications/exceptions listed above. MTC will review the requests and issue an addendum if material changes requested by a prospective Bidder are acceptable. Objections to MTC determinations on requests to change insurance requirements must be brought to MTC's attention no later than the date for protesting IFB provisions. If such objections are not brought to MTC's attention consistent with the protest provisions of this IFB, compliance with all material insurance requirements will be assumed.

Authority to Commit MTC

The Project Manager will recommend the successful Bidder to the Executive Director of MTC, who will commit MTC to the expenditure of funds in connection with this IFB.

Thank you for your participation.

Sincerely,

Steve Heminger
Executive Director

SH: MB
J:\CONTRACT\Procurements\Operations & Support Svcs\IFBs\Clipper Site Prep Services\Clipper Site Prep Services IFB_final.docx

INVITATION FOR BID

by

METROPOLITAN TRANSPORTATION COMMISSION

for

CLIPPER® SITE PREPARATION SERVICES

February 26, 2015

Joseph P. Bort MetroCenter
101 Eighth Street
Oakland, CA 94607-4700

TABLE OF CONTENTS

I. INSTRUCTIONS TO BIDDERS AND BIDDING REQUIREMENTS 1

A. DIRECTIONS 1
B. DEFINITIONS 1
C. PREPARATION OF BID 1
D. AWARD OF CONTRACT 3

II. GENERAL CONDITIONS 4

A. INDEPENDENT CONTRACTOR 4
B. CHANGES TO PURCHASE ORDER 5
C. TERMINATION 5
D. INDEMNITY 5
E. ASSIGNMENT 6
F. CHOICE OF LAW 6
G. PROHIBITED INTERESTS 6
H. COOPERATION BETWEEN CONTRACTORS 6

III. SPECIAL CONDITIONS 8

A. MINIMUM QUALIFICATIONS 8
B. PERIOD OF PERFORMANCE 8
C. SUBCONTRACTORS 8
D. INSPECTION AND ACCEPTANCE BY MTC 8
E. NOTICES 9
F. GUARANTY 9
G. SCHEDULING 10
H. CONTRACT ARRANGEMENTS 10
I. EXAMINATION OF SPECIFICATIONS AND SITES 10
J. UNKNOWN OBSTRUCTIONS 10
K. COST ESTIMATION 10
L. SUPPLIES 11
N. INSURANCE 11
O. INJURY PREVENTION 11
P. PREVAILING WAGE RATES, APPRENTICESHIPS, AND PAYROLL RECORDS 11

APPENDIX A, SCOPE OF WORK 12

APPENDIX A-1, TRI DELTA SITE - SCOPE OF WORK AND SPECIFICATIONS 13

APPENDIX A-1, TRI DELTA SITE - SCOPE OF WORK AND SPECIFICATIONS 14

APPENDIX A-3, WESTCAT SITE - SCOPE OF WORK AND SPECIFICATIONS 15

APPENDIX A-4, LIVERMORE-AMADOR VALLEY TRANSIT AUTHORITY (RUTAN/RAILROAD) - SCOPE OF WORK AND SPECIFICATIONS 16

APPENDIX A-5, LIVERMORE-AMADOR VALLEY TRANSIT AUTHORITY (ATLANTIS) - SCOPE OF WORK AND SPECIFICATIONS 17

APPENDIX A-6, MANUFACTURER DATA SHEETS – ALL PROJECTS 18

APPENDIX B-1, TRI DELTA BID FORM 19

APPENDIX B-2, THE COUNTY CONNECTION BID FORM 21

APPENDIX B-3, WESTCAT BID FORM 23

APPENDIX B-4, LIVERMORE-AMADOR VALLEY TRANSIT AUTHORITY – RUTAN/RAILROAD BID FORM 25

APPENDIX B-5, LIVERMORE-AMADOR VALLEY ATLANTIS BID FORM 28

APPENDIX C, REFERENCE FORM 30

APPENDIX D, SUBCONTRACTORS FORM **30**
APPENDIX E, GENERAL CONDITIONS FOR MTC PURCHASE ORDERS **32**
APPENDIX C, CALIFORNIA LEVINE ACT STATEMENT **37**
APPENDIX G, INSURANCE REQUIREMENTS **37**

I. INSTRUCTIONS TO BIDDERS AND BIDDING REQUIREMENTS

A. Directions

The provisions set forth below specify the standards by which bids will be received and considered by MTC. Bids not complying with these provisions may be considered non-responsive by MTC.

In order to be considered, your bid package shall include the completed forms listed below. Bidders who do not complete all appendices and include in their bid package risk being found non-responsive.

- *Appendices B1, B2, B3, B4, and/or B5*, Bid Form – for each applicable project
- *Appendix C*, Reference Form
- *Appendix D*, Subcontractors Form
- *Appendix F*, California Levine Act Statement
- *Appendix G*, Insurance Requirements

B. Definitions

1. MTC: Metropolitan Transportation Commission.

2. Bidder: An individual, firm, partnership, corporation, or combination thereof, submitting a bid.

4. Contractor: The Bidder to whom a Purchase Order is mailed or otherwise offered.

5. Bid: The forms included in this IFB become a bid when completed properly by a Bidder and submitted to MTC.

6. Contract: A signed MTC Purchase Order (refer to *Appendix E* for General Conditions) mailed or delivered to a particular Bidder, shall constitute a binding contract, which incorporates this IFB, and its addenda, if any, all documents referenced herein, any deviations from the specifications expressed and accepted by MTC, and all terms and conditions of the Purchase Order.

7. Standard Specifications:

C. Preparation of Bid

1. General

All prices and quotations shall be written legibly by computer printer, typewriter or pen and ink. No erasures shall be made. Errors may be crossed out and corrected by typewriter or pen and ink adjacent to the item crossed out. Each correction shall be initialed in ink by the person signing the bid.

2. Bid Price

The Total Bid Price shall include all costs of labor, materials, equipment, tools, machinery, utilities, transportation, license or permit fees, overhead, and profit and all other services necessary for proper execution and completion of the work.

3. Taxes

The total bid price shall include full compensation for all applicable federal, state, and local taxes, as may be appropriate.

4. Irregular Bids

Bids may be rejected if they show such irregularities as: any alteration of form, additions not called for, conditional bids, incomplete bids, indefinite or ambiguous bids, obviously unrealistic or unbalanced prices, or a signature by other than an authorized person.

5. Conditional Bids

No condition included in a bid shall be binding upon MTC if in conflict with, inconsistent with, or in addition to the terms and conditions of this IFB, unless expressly accepted in writing by MTC.

6. Addenda and Interpretations

MTC will not be responsible for any oral interpretation of the meaning of the requirements or specifications in this IFB. Every request for such interpretation shall be in writing addressed to: Attention: Michele Gillaspie MTC, 101 - 8th Street, Oakland, CA 94607-4700 or ClipperProcurements@mtc.ca.gov. Any and all such interpretations and any supplemental instructions will be in the form of written addenda to the specifications which, if issued, will be posted online at http://procurements.mtc.ca.gov/ . All addenda so issued shall become part of the Contract Documents.

7. Deviations

MTC reserves the right to permit deviations from the specifications if an article offered is deemed by MTC to be of as good quality and as satisfactory for its intended use as an article fully meeting specifications. Unless exceptions are noted by Bidder, the article offered will be assumed to be in accordance with specifications indicated.

8. Examination of Plans, Specifications and Sites

The Bidder shall satisfy him/herself as to the character, quality, and quantities of work to be performed, materials to be furnished, and as to the requirements of the proposed contract. The submission of a bid shall be prima facie evidence that the Bidder has made such examination and is satisfied as to the conditions to be encountered in performing the work and as to the requirements of the proposed contract, plans and specifications.

9. Submission

Only bids submitted on the applicable furnished bid form in *Appendices B1, B2, B3, B4, or B5* will be considered. Bids received after the date and time indicated for receipt of bids will not be considered. Bidders will be solely responsible for the delivery of the bid to MTC by the time, on the date, and at the location indicated for receipt of bids.

10. Withdrawal Before Bid Opening

No bids may be modified; however, a bid may be withdrawn by written request, signed by the individual who signed the bid or his authorized representative, and received by MTC prior to the time indicated for receipt of bid.

11. Protest of Specifications

Prospective Bidders may submit written protests of particular specifications of this IFB on the grounds that the specifications are biased, unduly restrictive, discourage competition, or do not comply with state or local law or regulation no later than seven (7) calendar days prior to the date bids are due. Such protests will be reviewed by MTC and responded to prior to bid opening. If appropriate, the time of bid opening will be extended to accommodate any changes in the IFB.

12. Relief of Bidder after Bid Opening

Unless MTC, in its sole discretion, elects otherwise, a Bidder shall not be relieved of his bid nor shall any change be made in his bid because of mistake. If a Bidder requests relief and MTC agrees to consider such request, it will be such Bidder's responsibility to establish that:

(a) A mistake was made;
(b) The Bidder gave MTC written notice of the mistake within five (5) calendar days after the opening of bids, specifying in detail how the mistake occurred;
(c) The mistake made the bid materially different than the Bidder intended it to be; and
(d) The mistake was made in filling out the bid and was not due to error in judgment or to carelessness in reading the IFB or referenced documents.

D. Award of Contract

1. Bid Opening

Bids will be opened publicly and publicly announced at MTC’s offices, at the address, on the date, and at the hour indicated herein for the receipt of bids. Bidders are invited, but are not required to be present.

2. Duration of Offer

A signed bid is deemed to be an offer to enter into a contract for services bid and is firm for the period of time stated in the Letter of Invitation, unless extended by the Bidder.

3. Discretion of MTC

MTC reserves the right to reject any and all bids and to waive informalities and minor irregularities in bids received, other provisions herein notwithstanding.

4. Discrepancies in Unit Prices and Extensions

In the event of a discrepancy between the Bid unit prices and extensions, the Bid unit price shall govern.

5. Selection of Contractor

The award for each project site, if an award is made, will be to the responsible Bidder, whose "Total Bid Price" for the applicable project site on the applicable Bid Form in *Appendix B1, B2, B3, B4, or B5*, conforming in all material respects to the terms and conditions of this IFB, is the lowest in price for the work requested.

6. One Bid

If MTC receives a bid from only one Bidder for a project site and that bid is made on terms differing from those set forth herein, MTC may, at its discretion, accept such terms as responsive.

7. Selection Disputes

A Bidder may protest the selection of a Contractor on the grounds that MTC procedures, the provisions of this IFB, or applicable provisions of state or local law have been violated or inaccurately and/or inappropriately applied by submitting to the MTC Project Manager a written explanation of the basis for protest no later than 4:00 p.m. on the third working day after bid opening.

The Agency's decision to award a contract to a Contractor shall be conditioned upon the expiration of the protest period.

II. GENERAL CONDITIONS

A. Independent Contractor

Contractor is an independent contractor and not an employee or agent of MTC and has no authority to contract or enter into any other agreement in the name of MTC. Contractor has, and hereby retains, full control over the employment, direction, compensation and discharge of all persons employed by Contractor who are assisting in the performance of services under this Agreement. Contractor shall be fully responsible for all matters relating to the payment of its employees, including compliance with social security, withholding tax and all other laws and regulations governing such matters. Contractor shall be responsible for its own acts and those of its agents and employees during the term of this Agreement.

B. Changes to Purchase Order

Any material changes to the terms of the Purchase Order shall require a written amendment to the Contract, signed by the MTC Executive Director or a designated representative and Contractor. No claim for additional compensation shall be recognized unless contained in a duly executed amendment.

C. Termination

1. Termination for Convenience

MTC may, by written notice stating the extent and effective date, terminate its contract with the Contractor for convenience in whole or in part, at any time. MTC shall pay the Contractor as full compensation for performance until such termination: the pro rata price for the period of performance up to the time of termination and reasonable termination costs. In no event shall MTC be liable for any loss of profits on the portion of the contract so terminated.

2. Termination for Default

If Contractor becomes insolvent, assigns or subcontracts the work without MTC approval, does not deliver the work specified in the Contract or fails to perform in the manner called for, or fails to comply with any other material provision of the Contract, MTC may terminate the Contract for default. Termination shall be effected by serving a ten (10) day advance written notice of termination on Contractor, setting forth the manner in which Contractor is in default. If Contractor does not cure the breach or propose a plan and schedule for curing the breach acceptable to MTC within the ten (10) day period, the Contract shall be deemed terminated for default.

MTC shall pay the Contractor as full compensation for performance until such termination the amount which would be payable under the Contract, offset by any costs incurred by MTC to correct or complete work required under the Contract, including the difference between Contractor's price for the contract and any higher price paid to another Contractor retained to complete the work.

Should Contract be deemed terminated for default, Contractor may not submit a bid on the same project that it defaulted on should MTC rerelease the project.

If it is determined by MTC that Contractor’s failure to perform resulted from unforeseeable causes beyond the control of Contractor, such as a strike, fire, flood, earthquake or other event that is not the fault of, or is beyond the control of Contractor, MTC, after setting up a new delivery or performance schedule, may allow Contractor to continue work, or treat the termination as a termination for convenience.

D. Indemnity

Contractor agrees to indemnify, and hold MTC, and its commissioners, officers, employees and agents harmless from all claims, demands, suits, losses, damages, injury, and liability, (including any and all costs and expenses in connection therewith) incurred by reason of any negligent or otherwise wrongful act, or failure to act of Contractor, its officers, agents, employees and

subcontractors or any of them, under or in connection with this IFB; Contractor agrees at its own cost expense and risk to defend any and all claims, demands, suits, or other legal proceedings brought or instituted against MTC and its commissioners, officers, agents, and employees, or any of them arising out of such acts or failure to act, and to pay and satisfy any resulting judgments.

E. Assignment

The Contractor shall not assign any right, duty or responsibility in this Contract without the prior written consent of MTC thereto; provided however, that claims for money due or to become due to Contractor from MTC under this Contract may be assigned without such approval. Notice of any such assignment shall be furnished promptly to MTC, and any such assignment shall be subject to all authorized withholdings in favor of MTC.

F. Choice of Law

All questions pertaining to the validity and interpretation of this Agreement shall be determined in accordance with the laws of the State of California.

G. Prohibited Interests

Contractor covenants that it presently has no interest and shall not acquire any interest, direct or indirect, which would conflict in any manner or degree or have the potential of conflicting with the performance of services required under the Agreement or the impartial rendering of assistance or advice to MTC. Contractor further covenants that in the performance of the Agreement no person having any such interest shall be employed.

No member, officer, employee or agent of MTC, during his/her tenure shall have any prohibited interest as defined by California Government Code Sections 1090, *et seq*. and 87100 *et seq*., direct or indirect, in the Agreement or the proceeds thereof. Prohibited interests include interests of immediate family members, domestic partners, and their employers or prospective employers. Accordingly, Contractor further covenants that it has made a complete disclosure to MTC of all facts of which it is aware upon due inquiry bearing upon any possible interest, direct or indirect, which it believes any member, officer, agent or employee of MTC (or an immediate family member, domestic partner or employer or prospective employer of such member, officer, agent or employee) presently has, or will have in the Agreement, or in the performance thereof, or in any portion of the profits thereunder. Willful failure to make such disclosure, if any, shall constitute grounds for cancellation and termination hereof by MTC.

H. Cooperation Between Contractors

MTC reserves the right for itself or the applicable transit operator that owns the applicable project site to contract for and perform other or additional work on or near the work covered by these specifications. When separate contracts are let within the limits of any one project, each contractor shall conduct his work so as not to interfere with or hinder the progress or completion of the work being performed by other contractors. Contractors working on the same project shall cooperate with each other as directed. Each contractor involved shall assume all liability, financial or otherwise, in connection with his contract and shall protect and save harmless MTC from any and all damages or claims that may arise because of inconvenience, delays, or loss

experienced by him because of the presence and operations of other contractors working within the limits of the same project.

III. SPECIAL CONDITIONS

A. Minimum Qualifications

To be eligible to submit a bid, a Bidder must:

1. Have been regularly engaged in the business of providing similar services for at least one (1) year;
2. Have a sufficient number of qualified employees to guarantee prompt, efficient work;
3. Possess and submit a current and active contractor's license to perform the type of work requested;
4. Have performed successfully, within the last five (5) years, at least five (5) projects of similar nature to the services described herein;
5. Attend the mandatory site walk through; and
6. Register itself and all its subcontractors with the Department of Industrial Relations pursuant to Labor Code section 1725.5 (with limited exceptions from this requirement for bid purposes only under Labor Code section 1771.1(a)) in order to be considered.

Bidders will be required to verify these qualifications prior to the award of contract.

B. Period of Performance

The contract resulting from this IFB will commence on or approximately March 24, 2015 through April 17, 2015.

C. Subcontractors

Bidders shall submit to MTC as part of their bids the names of subcontractors they propose to engage on the project, the work they will be performing, and references (Appendix C). MTC reserves the right to request from any Bidder additional information regarding a proposed subcontractor relevant to its performance of work under this IFB and to request the Bidder to obtain another subcontractor, if the named subcontractor would not, in the judgment of MTC, be able to meet the requirements of the IFB. Bidders shall be held responsible for all work conducted through a subcontractor.

D. Inspection and Acceptance by MTC

1. Inspection

All performance, which includes services, materials, supplies and equipment furnished or utilized in the performance of this contract, and workmanship in the performance of services shall be subject to inspection and test by MTC or its designated inspector at all times during the term of the contract. The Contractor shall provide adequate cooperation to the inspector assigned by MTC to permit the inspector to determine the Contractor's conformity with these specifications and the adequacy of the services being contractually provided.

2. Acceptance

If any services performed hereunder are not in conformity with the specifications and requirements of this contract, MTC shall have the right to require the Contractor to perform the services in conformity with said specifications and requirements at no additional increase in total contract amount, prior to acceptance. When the services to be performed are of such nature that the difference cannot be corrected, MTC shall have the right to (1) require the Contractor immediately to take all necessary steps to ensure future performance of the services in conformity with requirements of the contract, and (2) reduce the price to reflect the reduced value of the services performed.

In the event that Contractor fails to perform the services promptly or take necessary steps to ensure future performances of the service in conformity with the specifications and requirements of the contract, MTC shall have the right (1) to terminate the contract for default as provided above and (2) by contract or otherwise to have the services performed in conformity with the contract specifications and charge to the Contractor any cost occasioned to MTC that is directly related to the performance of such services.

E. Notices

All notices or other communications to either party by the other shall be deemed given when made in writing and delivered or mailed to such party at their respective addresses as follows:

To MTC:	Attention: Michele Gillaspie, Project Manager MTC 101 - 8th Street Oakland, CA 94607-4700 Email: mgillaspie@mtc.ca.gov Fax: (510) 817-5848
To Contractor:	Signator of Bid form Address on Bid Form Address on Bid Form Fax number on Bid Form Email address on Bid Form

F. Guaranty

The Contractor guarantees that the services will be performed in a professional manner by qualified personnel. Upon receiving notification from MTC that a defect is detected, the Contractor shall repair or replace the work performed initially, without cost to MTC, and to MTC's satisfaction. The Contractor's guaranty excludes damage or defect caused by abuse by MTC or modifications not executed by the Contractor. The Contractor guarantees to arrive promptly at the date and time scheduled with the MTC Project Manager prepared to perform the tasks as specified in the applicable Scope(s) of Work in *Appendices A-1, A-2, A-3, A-4, and/or A-5*.

G. Scheduling

Contractor shall not commence any work until a project kick-off meeting between the Contractor and MTC's Project Manager or designated representative is held. The meeting will be held at a time and date to be established by the MTC Project Manager or designated representative. No work will be done unless authorized by the MTC Project Manager or designated representative.

H. Contract Arrangements

MTC shall issue purchase order(s) to the successful Contractor(s) that shall incorporate this IFB, the Contractor's bid(s), and all terms and conditions set forth in the contract. General Conditions of the MTC Contract are included in this IFB as *Appendix E*.

I. Examination of Specifications and Sites

Bidders shall satisfy themselves as to the character, quality, and quantities of work to be performed, materials to be furnished, and as to the requirements of the proposed contract. The submission of a bid shall be prima facie evidence that a Bidder has made such examination and is satisfied as to the conditions to be encountered in performing the work and as to the requirements of the proposed contract, plans and specifications. Failure to do so will be at Bidders' own risk and they cannot secure relief on the plea of error.

J. Unknown Obstructions

Should any unknown obstruction be encountered during the course of this contract the Contractor shall immediately bring it to the attention of the MTC Project Manager or designated representative. The Contractor shall be responsible for the protection of all employees, existing equipment, furniture, or utilities encountered within the work area.

K. Cost Estimation

It is the responsibility of the Bidder to make all estimates (labor hours, materials, etc.) to determine his/her bid price to complete the work specified under this IFB. MTC shall not be held accountable for differences to the estimates provided in the applicable Bid Form(s) in *Appendices B-1, B-2, B-3, B-4*, and/or *B5*.

L. Supplies

Contractor is to provide all necessary supplies and to include the costs of such supplies in its bid.

M. Liquidated Damages

In the event Contractor fails to complete the work by the completion date in the approved work schedule (as modified by any approved change orders), MTC may charge the Contractor liquidated damages of $100 per day, reduced by whatever delays were caused by MTC as determined by the MTC Project Manager.

N. Insurance

Insurance Requirements are included in this IFB, as *Appendix G*, and Contractor must fully comply with the requirements as listed. If the lowest responsive Bidder cannot provide the required insurance to MTC within five (5) business days of notice of award, MTC at its sole option may deem that Bidder unresponsive and move the award to the next lowest responsive responsible Bidder.

O. Injury Prevention

As part of MTC's Injury Prevention Program (IPP) established pursuant to California Labor Code Section 6401.7, Contractor may be required to provide MTC with a description of Contractor's IPP and, specifically, of methods and procedures for identifying and using safe conditions and work practices at the worksite while performing specified work. In addition, the work ordered hereunder is considered a "public work", Contractor shall comply with California Labor Code Sections 1774 and 1775 with respect to prevailing wages.

P. Prevailing Wage Rates, Apprenticeships, and Payroll Records

The Contractor shall comply with Sections 7-1.02K(1), General, Section 7-1.02K(2), Wages, Section 7-1.02K(4), Apprentices, and Section 7-1.02K(5), Working Hours of the Standard Specifications. In the performance of the work specified in this Contract, you and all your subcontractors are responsible for complying with California Labor Code Sections 1776 (Payroll records, retention, inspection, noncompliance penalties, rules and regulations) and 1777.5 (Employment of registered apprentices, wages, standards, number, apprenticeable craft or trade, exemptions, contributions). MTC reserves the right to require you and all your subcontractors to furnish electronic certified payroll records directly to MTC in addition to the reporting requirement stated below. *Attachment H,* Wage Determination, is included in this IFB, and incorporated herein by this reference. For all new projects awarded on or after April 1, 2015, you and all your subcontractors must be registered with the Department of Industrial Relations pursuant to Code section 1725.5 in order to be awarded a contract and must furnish electronic certified payroll records directly to the Labor Commissioner (aka Division of Labor Standards Enforcement).

APPENDIX A
Scope of Work

Contractor will provide site preparation services at the following project locations:

Transit Operator	Site	Site Address	Scope of Work
Tri Delta Transit	Tri Delta Bus Yard	801 Wilbur Ave Antioch, CA 94509	A-1 and A-6
The County Connection	County Connection Bus Yard	2477 Arnold Industrial Parkway Concord, CA 94520	A-2 & A-6
WestCat	WestCat Transit Bus Yard	601 Walter Ave Pinole, CA 94564	A-3 and A-6
Livermore-Amador Valley Transit Authority	Wheels Bus Yard - Rutan Site	1362 Rutan Ct Livermore, CA 94551	A-4 and A-6
	Wheels Bus Yard - Transit Center Site	2500 Railroad Ave Livermore, CA 94551	A-4 and A-6
Livermore-Amador Valley Transit Authority	Wheels Bus Yard - Atlantis Site	875 Atlantis Ct Livermore, CA 94551	A-5 and A-6

Site preparation services may include, but are not limited to those services detailed in the applicable Scope(2) attached as *Appendices A-1, A-2, A-3, A-4, A-5, and A6,* respectively, to this IFB, incorporated herein by this reference.

Contractor shall furnish all management, supervision, labor, supplies, materials, equipment, and tools required to perform the required services.

Appendix A-1

Scope of Work and Specifications

Tri Delta Transit

801 Wilbur Ave., Antioch, CA 94509

See Appendix A-6 for Manufacturer Data Sheets

Tri Delta Site Preparation

DR 64 / CDRL 60

Document Number: 9614-37028

Revision: A.00

Date: 24 Nov 2014

CUBIC™

Intelligent travel made real™

CONTENTS

1. INTRODUCTION 1
1.1 PURPOSE 3

2. RESPONSIBILITIES ..... Error! Bookmark not defined.
2.1 SUCCESSFUL BIDDER ..... **ERROR! BOOKMARK NOT DEFINED.**
2.2 SOLUTIONS FOR TRANSIT ..... **ERROR! BOOKMARK NOT DEFINED.**

3. SITE PREPARATION 4
3.1 SERVER 5
3.1.1 Rack Space 5
3.1.2 Power 5
3.1.3 Network 5
3.2 WIRELESS ACCESS POINTS 5
3.2.1 Network 5
3.2.2 Grounding 6
3.2.3 Physical Mounting 6
3.3 ANTENNAS 6
3.3.1 Physical Mounting 6
3.4 POWER OVER ETHERNET BOX (TRI DELTA ONLY) 7
3.4.1 Power 7
3.4.2 Grounding 8
3.5 TOT 8
3.5.1 Power 8
3.5.2 Network 8
3.5.3 Telephone 8
3.5.4 Physical Mounting 8
3.6 COMPLETION 8

4. OPERATOR FACILITIES 9
4.6 TRI DELTA TRANSIT 9
4.6.1 Server Rack 9
4.6.2 Ticket Office Terminal 9
4.6.3 Bus Communication Wireless 9

Appendix

APPENDIX A **Manufacturer Data Sheets A-1**
A.1 MOXA A-1
A.2 DINSPACE A-1
A.3 DEHN A-1
A.4 PHOENIX CONTACT A-1
A.5 SENTINEL CONNECTOR A-1
A.6 BELDEN A-1

This document contains proprietary and confidential information originated or owned by Cubic. Neither this document nor the information disclosed herein shall be reproduced or transferred to other documents or used or disclosed to others for manufacturing or any other purposes except as specifically authorized in writing by Cubic.

Figures

Figure 1-1: East Bay Operator Group System Diagram 2
Figure 3-1: Typical Flat Panel (left) and Omni Antenna (right) Installations 7
Figure 4-16: Tri Delta Wireless Access Point and Antenna Location #1 10
Figure 4-17: Tri Delta Wireless Access Point and Antenna Location #2 10
Figure 4-18: Tri Delta 2.4 GHz and 5 GHz Radios 10
Figure 4-19: Tri Delta Signal Strength 11

Tables

Table 4-6. Tri Delta Operator Site Preparation Tasks 11

This document contains proprietary and confidential information originated or owned by Cubic. Neither this document nor the information disclosed herein shall be reproduced or transferred to other documents or used or disclosed to others for manufacturing or any other purposes except as specifically authorized in writing by Cubic.

Acronyms and Abbreviations

Cat6	Category 6 Network Cable
CDS	Clipper® Data Server
County Connection	Transit Operator: Central Contra County Transportation Authority
Cubic	Cubic Transportation Systems, Inc.
DIB	Design Information Bulletin
HCR	Handheld Card Reader
MIMO	Multiple-Input Multiple-Output
MPOE	Minimum Point Of Entry (where phone/internet provider will cable to)
MTC	Metropolitan Transportation Commission
OD	Outside Diameter
Operator	Transit Operator
PoE	Power-over-Ethernet
RU	Rack Unit (space in server rack approx.. 2” high)
TOT	Ticket Office Terminal (usually pronounced “tote”)
Tri Delta	Transit Operator: Eastern Contra Costa Transit Authority
UPS	uninterruptible power supply
WAN	Wide Area Network
WDTS	Wireless Data Transmission System (Clipper® Access Point)
WestCAT	Transit operator: Western Contra Costa Transportation Authority
Wheels	Transit Operator: Livermore Amador Valley Transit Authority

This document contains proprietary and confidential information originated or owned by Cubic. Neither this document nor the information disclosed herein shall be reproduced or transferred to other documents or used or disclosed to others for manufacturing or any other purposes except as specifically authorized in writing by Cubic.

1. INTRODUCTION

This design information bulletin (DIB) provides specification of the installation of the Clipper® system components and infrastructure at the transit operators in the East Bay operator group.

At each facility covered by this document Site Preparation requires the Transit Operator provide space and infrastructure for the installation of various components.

The Server/Switch/ uninterruptible power supply (UPS)/Power-over-Ethernet (PoE) components all require rack space in a secure, environmentally controlled space. If a rack does not exist, a new one must be installed. The Ticket Office Terminal (TOT) requires area in a customer service location.

The Successful Bidder will report directly to the Metropolitan Transportation Commission (MTC) or its designees, Solutions for Transit and CH2M Hill, Inc., with questions, guidance, approvals, and acceptance of the completed job. There will be no direct communication with the individual Transit Operators, or Cubic Transportation Systems, Inc. (Cubic). The work will be scheduled in advance, through MTC, Solutions for Transit or CH2M Hill, Inc., and will occur in such a manner as to not affect the business conducted by the individual Transit agencies.

This document is written by Cubic. Cubic has no relationship and is not affiliated in any way with Solutions for Transit or CH2M Hill, Inc. and takes no responsibility or liability for any statements, verbal or written, made by Solutions for Transit, CH2M Hill, Inc., or any of their employees. Any approvals or direction that are given by Solutions for Transit or CH2M Hill, Inc. are not endorsed or accepted by Cubic, and Cubic reserves the right to accept or reject any work done or equipment supplied by Bidder regardless of any statements made by Solutions for Transit or CH2M Hill, Inc..

Figure 1-1 provides an overall system diagram which is described in detail throughout Section 2.2. Detailed equipment lists of the equipment Cubic shall provide are in APPENDIX A. The specifications for what equipment the operator must provide can be extrapolated from the tables in Section 4.

This document contains proprietary and confidential information originated or owned by Cubic. Neither this document nor the information disclosed herein shall be reproduced or transferred to other documents or used or disclosed to others for manufacturing or any other purposes except as specifically authorized in writing by Cubic.

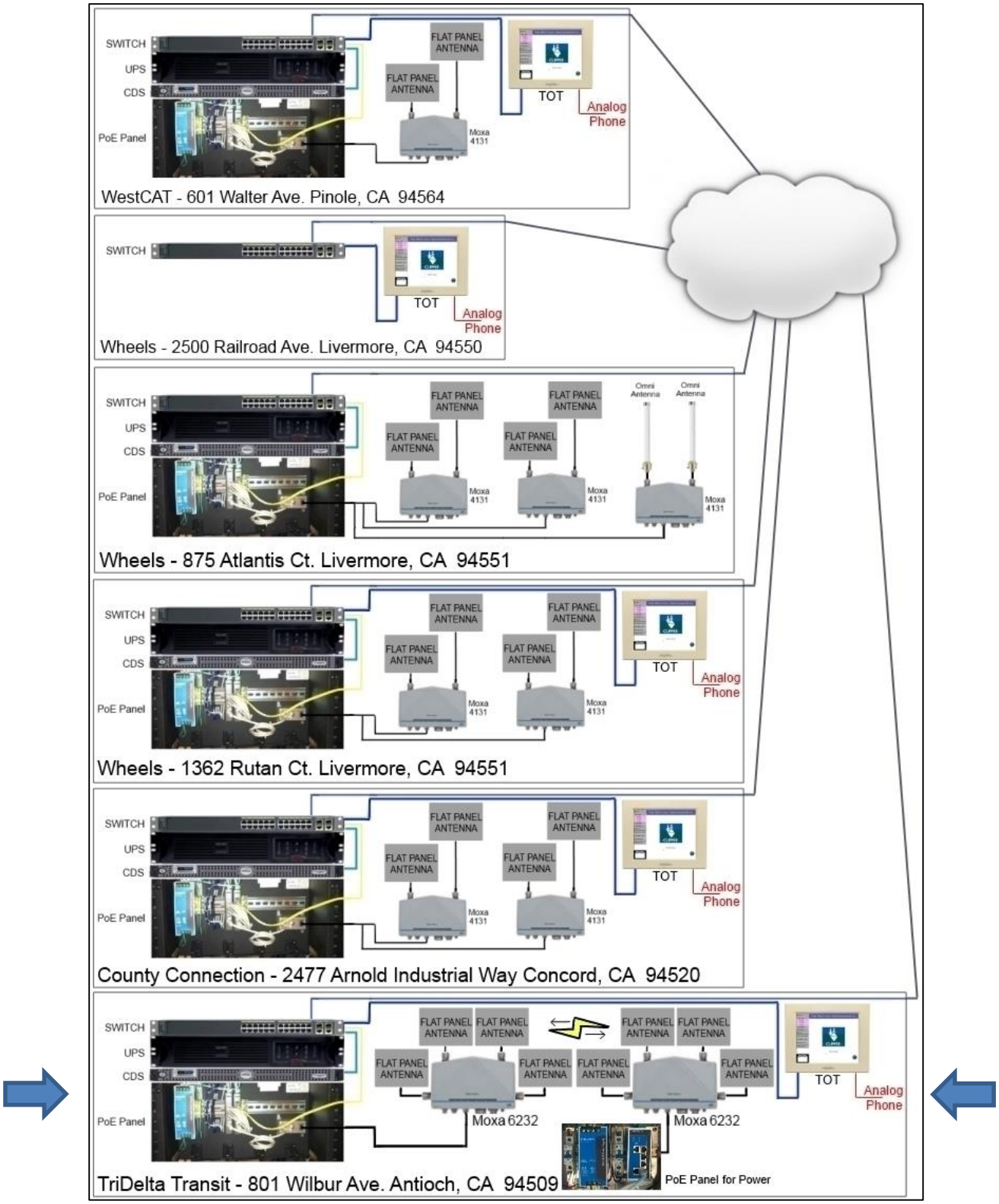

Figure 1-1: East Bay Operator Group System Diagram

This document contains proprietary and confidential information originated or owned by Cubic. Neither this document nor the information disclosed herein shall be reproduced or transferred to other documents or used or disclosed to others for manufacturing or any other purposes except as specifically authorized in writing by Cubic.

1.1 PURPOSE

This document provides the necessary site preparation information for the phase III rollout of the East Bay operator (Tri Delta Transit) bus and customer service sites. This document identifies the responsibilities of the Operators, Cubic, and Metropolitan Transportation Commission (MTC) pursuant to the Contract, Section B4-4.4.2. Responsibilities are outlined in Section 2 of this document.

This document contains information outlining the site preparation requirements for the following facilities:

- Tri Delta Transit
    - Bus Yard – 801 Wilbur Ave. Antioch, CA 94509

This document contains proprietary and confidential information originated or owned by Cubic. Neither this document nor the information disclosed herein shall be reproduced or transferred to other documents or used or disclosed to others for manufacturing or any other purposes except as specifically authorized in writing by Cubic.

2. RESPONSIBILITIES

2.1 SUCCESSFUL BIDDER FOR TRI DELTA

The Successful Bidder are responsible for the preparation of their facilities that will be utilized as part of the Clipper® system. All work should be performed by qualified personnel in accordance with local, state, and federal regulations and codes (e.g., National Electrical Code Article 800 for communication circuits), and industry standard practices. Operator responsibilities include:

- Procuring and installing the following equipment, as necessary, to support installation of fixed Clipper® equipment (servers, access points, switches, antennas, TOTs)
    - Power supplies
    - Circuit breakers
    - Communications cabling, Cat6 and twisted pair
    - Wide Area Network (WAN) Routers
    - Conduit
    - Enclosures or shelving units adequate to hold the equipment for each Operator as listed below.
    - Cisco Extend Air R5005 Bridge to antenna locations (as necessary)
    - Other equipment as necessary
- Requesting site readiness inspection when all site preparation work is completed

2.2 METROPOLITAN TRANSPORTATION COMMISSION (MTC)

MTC or its designee(s) is responsible for acceptance of the Clipper® network, which includes:

- Preparing this document and the specific documents that show site preparation tasks for each Transit Operator.
- Identifying the infrastructure required to be procured and installed.
- Conducting and documenting pre-installation site inspection.
- Working with the Transit Operator so that the schedule and work is performed to specification.

This document contains proprietary and confidential information originated or owned by Cubic. Neither this document nor the information disclosed herein shall be reproduced or transferred to other documents or used or disclosed to others for manufacturing or any other purposes except as specifically authorized in writing by Cubic.

3. SITE PREPARATION

3.1 SERVER

3.1.1 Rack Space

At each bus facility, Tri Delta Transit will provide 6 Rack Unit (RU) spaces, in a 19-inch rack frame for the Clipper® equipment. This space shall be in an enclosure or area that provides a temperature controlled environment between 50° to 95°F. The dust particle count must be within acceptable standards for a business office. The rack space is required for:

- One RU space for the Clipper® Data Server (CDS)
- One RU space for a switch
- Two RU space for a UPS
- Five RU space for PoE panel will be installed on back side of rack behind router/switch and due to its length, above or below the CDS (requiring 6 RU in total)

NOTE

In the event that a two post type open rack is used, the Operator will need to supply 11 RU spaces. The PoE panel will be installed above or below the other components on this type of rack.

3.1.2 Power

Successful Bidder will provide one dedicated circuit breaker, 120 V-ac 20A for the rack mounted components at each location. The Operator will run power from this sub panel to the rack units, terminated at one 120 v-ac quad receptacle power terminal, Leviton 1254 with a 4x4 gang box or equivalent, mounted inside each of the rack frame or to the frame of a two post rack.

3.1.3 Network

Successful Bidder shall provide network connection between the Minimum Point of Entry (MPOE) and rack, terminated in the rack with a male RJ45 with a minimum 6 feet of slack remaining.

3.2 WIRELESS ACCESS POINTS

3.2.1 Network

Successful Bidder shall provide a network connection between the rack and the wireless access point installation location(s).

The rack end of the cable is to be terminated with a shielded RJ45 plug PN 111S08080028L34 (see Appendix A.4) in the rack with a minimum of 6 feet slack remaining.

The end at the access point shall be terminated with a M12 Connector PN 1543236 (see Appendix A.4) with a connector cap - PN 1430873.

The cable between the two should be Belden 7939A. This cable is suited for harsh environments and outdoor installation. Datasheet is in Appendix A.6.

This document contains proprietary and confidential information originated or owned by Cubic. Neither this document nor the information disclosed herein shall be reproduced or transferred to other documents or used or disclosed to others for manufacturing or any other purposes except as specifically authorized in writing by Cubic.

3.2.2 Grounding

Each wireless access point will need a 10ga neutral ground wire run from a suitable grounding point to the installation location, terminated with a #8 stud terminal ring.

3.2.3 Physical Mounting

Clearance around the access point is a minimum of 12in vertically both top and bottom, and 6in from each side of the case. The access point is 8.82” W x 6.64” H x 2.62” D. This creates a window of approx. 30” H x 18” W.

Pole mount(s) shall be the preferred mounting. The pole should be a standard 2-3/8” antenna mast pole, galvanized or stainless steel. Where the device is mounted inside a fuel island only a piece of Unistrut is used.

3.3 ANTENNAS

There are two antenna types that will be used. There is an omni-directional type or a flat panel directional type. Which type used depends on the location and shape of the yard to be covered. As these are 802.11n access points there will be two antennas per access point to utilize MIMO (multiple-input multiple-output). The antennas installed on the coaches also use MIMO.

Each omni-directional antenna weigh 0.63 lbs. (286g) and will be mounted 2’ to 3’ apart on a single cross member mounted to the pole used to mount the a pole.

Each flat panel directional type weighs 2.27 lbs. (1030g) and will be mounted 2’ to 3’ apart using a cross member mounted to a pole.

3.3.1 Physical Mounting

Both the omni-directional and flat panel antennas are to be mounted next to the Wireless Data Transmission System (WDTS) on Unistrut cross members attached to the poles. Figure 3-1 shows a typical directional antenna installation. This image also shows the pole mounted wireless access point. The example shows a different flat panel antenna, the ones Cubic will install will only need one cross member.

This document contains proprietary and confidential information originated or owned by Cubic. Neither this document nor the information disclosed herein shall be reproduced or transferred to other documents or used or disclosed to others for manufacturing or any other purposes except as specifically authorized in writing by Cubic.

Figure 3-1: Typical Flat Panel (left) and Omni Antenna (right) Installations

3.4 POWER OVER ETHERNET BOX (TRI DELTA ONLY)

At the Tri Delta location due to the length of the yard and lack of communications cabling options a wireless extension will be installed. The access point to be used will only need power to allow it to extend coverage.

3.4.1 Power

Power will be needed on a light pole at 5' above ground. The box can be drilled upon installation to accept the wires/conduit through the back, bottom, or side of the box.

The power wires should be wrapped/sealed and left protruding from a sealed connection through the wall of the pole or coming out of conduit that will be attached to the box. If the conduit is used, seal the end of the conduit and wires inside a heavy duty plastic bag. Power will be terminated in the box by installation crew.

WARNING

This power needs to be run to a separate breaker that is locked in the open position and tagged out "DO NOT TURN ON" until the PoE box is installed.

This document contains proprietary and confidential information originated or owned by Cubic. Neither this document nor the information disclosed herein shall be reproduced or transferred to other documents or used or disclosed to others for manufacturing or any other purposes except as specifically authorized in writing by Cubic.

3.4.2 Grounding

The PoE box will need a 10ga neutral ground run to the box location. The termination to a common earth point inside the box will be completed during the PoE box installation.

3.5 TOT

3.5.1 Power

120VAC power will be needed within 3 feet of the TOT. Power will be terminated in a single or double gang box.

3.5.2 Network

Network from the CDS (Server) to the TOT will be needed. The network line is to be terminated with a RJ45 plug and 6 feet of slack, or at a wall plate jack within 3 feet of the TOT.

3.5.3 Telephone

The TOT requires an analog telephone line in order to handle any credit/debit transactions. Phone line is to be terminated in a box or wall plate within 3 feet of the TOT.

3.5.4 Physical Mounting

The TOT sits on a stand and has a keyboard, mouse, card reader, and printer. The system needs an area 2ft. x 2ft.

3.6 COMPLETION

Once the Successful Bidder confirms that the site preparation work is complete, Bidder will notify MTC or its designee(s) that the site is ready for a site inspection. If MTC or its designee(s) determine that the site preparation is not complete, or has been done incorrectly, Bidder will correct the site preparation.

This document contains proprietary and confidential information originated or owned by Cubic. Neither this document nor the information disclosed herein shall be reproduced or transferred to other documents or used or disclosed to others for manufacturing or any other purposes except as specifically authorized in writing by Cubic.

4. OPERATOR FACILITIES

4.1 TRI DELTA TRANSIT

4.1.1 Server Rack

The server, UPS, and PoE components will be installed in a rack in the existing server room (labeled Telephone Room).

4.1.2 Ticket Office Terminal

The TOT will be installed in the lobby.

The TOT will require a 2' x 2' area to install the computer and peripherals.

An analog phone line must be provided for the TOT.

A solution for networking between the server and TOT is to be provided by the operator.

4.1.3 Bus Communication Wireless

Due to the shape and size of the yard(s), covering all the coach parking goes to an area where there is no network infrastructure in the East lot. For this application, a "bridged" wireless connection will be installed. This application will be done with two dual radios. The dual radio will allow one radio in a single access point to be dedicated to one purpose, while the other radio in the same housing will be dedicated to a wireless bridge that connects to another dual radio for additional coverage. There was some traffic in the 2.4 GHz range, but most was low signal strength. The 2.4 provides for more range.

This document contains proprietary and confidential information originated or owned by Cubic. Neither this document nor the information disclosed herein shall be reproduced or transferred to other documents or used or disclosed to others for manufacturing or any other purposes except as specifically authorized in writing by Cubic.

Figure 4-1: Tri Delta Wireless Access Point and Antenna Location #1

Figure 4-2: Tri Delta Wireless Access Point and Antenna Location #2

Figure 4-3: Tri Delta 2.4 GHz and 5 GHz Radios

This document contains proprietary and confidential information originated or owned by Cubic. Neither this document nor the information disclosed herein shall be reproduced or transferred to other documents or used or disclosed to others for manufacturing or any other purposes except as specifically authorized in writing by Cubic.

Figure 4-4: Tri Delta Signal Strength

Table 4-1. Tri Delta Operator Site Preparation Tasks

Task	Location	Description
Provide 5 RU or 10 RU in rack	Server Room (Telephone Room)	• Rack to be 30” deep • 5 RU to house the server, ups, and PoE rack if it can be installed from both sides in a full frame or 4 post rack • If only one side is accessible or available as in a 2 post rack, 10 RU will be required
Provide Power to Rack	Inside cabinet or on frame	• 2 Gang 4 outlet inside of rack cabinet or attached to rack frame • Fed by dedicated 20A circuit
Provide Network to Rack	Between MPOE and Rack	• Provide network connection between MPOE switch location • Terminate with a RJ45 plug with at least 6ft. of slack
Provide Network to Wireless Access Point at Location #1	From rack to mounting location	• Provide network connection between switch and both access point #1 • Cable to be Belden 7929A. Run between locations per codes and best practices • Terminate at rack end with RJ45 plug - Sentinel Connector Systems Inc. P/N 111S08080028L34 – MFG data sheet is in APPENDIX A with at least 6ft. of slack • Terminate at access point location with M12 connector - Phoenix Contact P/N 1543236 with 2 ft. of slack • Install connector cap on M12 connector
Provide Wireless Access Point Mount at Location #1	Above roof line in exact position shown in Figure 4-16	• Provide pipe to mount WDTS and four antennas • Pipe to be 2-3/8” OD • Pipe to be mounted vertically on top of roof with braces • Pipe to protrude at least 3 feet 6 inches above the roof line
Provide antenna mounting frame at Location #1	On pipe above	• Provide and mount a Unistrut P1000T cross member 3 feet long 6” from top of pipe above • Provide and mount another Unistrut P1000T cross member 3 feet long 24” from top of pipe above • Mount center of both sections of Unistrut to pipe so both arms are of equal length

This document contains proprietary and confidential information originated or owned by Cubic. Neither this document nor the information disclosed herein shall be reproduced or transferred to other documents or used or disclosed to others for manufacturing or any other purposes except as specifically authorized in writing by Cubic.

Provide Wireless Access Point Mount at Location #2	On pole as shown in Figure 4-13	• Provide pipe to mount WDTS and four antennas • Pipe to be 2-3/8” OD 3 feet long • Pipe to be mounted vertically with a stand off from light pole • Center of pole to be 21 feet above ground
Provide antenna mounting frames at Location #2	On pipe above	• Provide and mount a Unistrut P1000T cross member 3 feet long 6” from top of pipe above • Provide and mount another Unistrut P1000T cross member 3 feet long 6” from bottom of pipe above • Mount center of both sections of Unistrut to pipe so both arms are of equal length
Provide Power for TOT	Within 2 ft. of TOT location	• An outlet for a power strip for the TOT as there are two power supplies and the computer itself to plug in
Provide Network to TOT	From rack to TOT	• Provide network connection between Rack and TOT • Terminate at rack end with RJ45 plug with at least 6ft. of slack • Terminate at TOT location with RJ45 plug with at least 6ft. of slack
Provide Analog Phone Line for TOT	Within 6ft. of TOT location	• Analog phone line is required for the credit/debit functionality of the TOT • Terminate in a wall plate or box with RJ11 jack

This document contains proprietary and confidential information originated or owned by Cubic. Neither this document nor the information disclosed herein shall be reproduced or transferred to other documents or used or disclosed to others for manufacturing or any other purposes except as specifically authorized in writing by Cubic.

APPENDIX A MANUFACTURER DATA SHEETS

A.1 MOXA

Moxa 4131 Wireless Access Point

Moxa 6232 Wireless Access Point

Moxa PoE Power Supply

Moxa PoE Injector

Moxa Omni Antenna.pdf

Moxa Flat Panel Antenna.pdf

Moxa Pole Mount

A.2 DINSPACE

DIN Rack Adapter

A.3 DEHN

Ethernet DIN Rack Surge Suppressor

A.4 PHOENIX CONTACT

WDTS M12 Ethernet Connector

M12 Connector Cap

A.5 SENTINEL CONNECTOR

WDTS RJ45 Connector in Rack

A.6 BELDEN

Belden 7929A Outdoor Ethernet Cal

This document contains proprietary and confidential information originated or owned by Cubic. Neither this document nor the information disclosed herein shall be reproduced or transferred to other documents or used or disclosed to others for manufacturing or any other purposes except as specifically authorized in writing by Cubic.

Appendix A-2

Scope of Work and Specifications

The County Connection

2477 Arnold Industrial Way, Concord, CA 94520

See Appendix A-6 for Manufacturer Data Sheets

County Connection Site Preparation

DR 64 / CDRL 60

Document Number: 9614-37028

Revision: A.00

Date: 24 Nov 2014

CUBIC™

Intelligent travel made real™

CONTENTS

1. INTRODUCTION 1
1.1 PURPOSE 3

2. RESPONSIBILITIES 4
2.1 SUCCESSFUL BIDDER FOR COUNTY CONNECTION 4
2.2 METROPOLITAN TRANSPORTATION COMMISSION (MTC) 4

3. SITE PREPARATION 5
3.1 SERVER 5
3.1.1 Rack Space 5
3.1.2 Power 5
3.1.3 Network 5
3.2 WIRELESS ACCESS POINTS 5
3.2.1 Network 5
3.2.2 Grounding 6
3.2.3 Physical Mounting 6
3.3 ANTENNAS 6
3.3.1 Physical Mounting 6
3.3.2 Power 7
3.3.3 Grounding 7
3.4 TOT 8
3.4.1 Power 8
3.4.2 Network 8
3.4.3 Telephone 8
3.4.4 Physical Mounting 8
3.5 COMPLETION 8

4. OPERATOR FACILITIES 9
4.1 COUNTY CONNECTION 9
4.1.1 Server Rack 9
4.1.2 Ticket Office Terminal 9
4.1.3 Bus Communication Wireless 9

Appendix

APPENDIX A **Manufacturer Data Sheets 1**
A.1 MOXA 1
A.2 DINSPACE 1
A.3 DEHN 1
A.4 PHOENIX CONTACT 1
A.5 SENTINEL CONNECTOR 1
A.6 BELDEN 1

This document contains proprietary and confidential information originated or owned by Cubic. Neither this document nor the information disclosed herein shall be reproduced or transferred to other documents or used or disclosed to others for manufacturing or any other purposes except as specifically authorized in writing by Cubic.

Figures

Figure 1-1: East Bay Operator Group System Diagram 2
Figure 3-1: Typical Flat Panel (left) and Omni Antenna (right) Installations 7
Figure 4-12: County Connection Wireless Access Point and Antenna Locations #1 10
Figure 4-13: County Connection Wireless Access Point and Antenna Location #2 10
Figure 4-14: County Connection 2.4 GHz and 5 GHz Radios 10
Figure 4-15: County Connection Signal Strength 11

Tables

Table 4-5. County Connection Operator Site Preparation Tasks 11

This document contains proprietary and confidential information originated or owned by Cubic. Neither this document nor the information disclosed herein shall be reproduced or transferred to other documents or used or disclosed to others for manufacturing or any other purposes except as specifically authorized in writing by Cubic.

Acronyms and Abbreviations

Cat6	Category 6 Network Cable
CDS	Clipper® Data Server
County Connection	Transit Operator: Central Contra County Transportation Authority
Cubic	Cubic Transportation Systems, Inc.
DIB	Design Information Bulletin
HCR	Handheld Card Reader
MIMO	Multiple-Input Multiple-Output
MPOE	Minimum Point Of Entry (where phone/internet provider will cable to)
MTC	Metropolitan Transportation Commission
OD	Outside Diameter
Operator	Transit Operator
PoE	Power-over-Ethernet
RU	Rack Unit (space in server rack approx.. 2” high)
TOT	Ticket Office Terminal (usually pronounced “tote”)
Tri Delta	Transit Operator: Eastern Contra Costa Transit Authority
UPS	uninterruptible power supply
WAN	Wide Area Network
WDTS	Wireless Data Transmission System (Clipper® Access Point)
WestCAT	Transit operator: Western Contra Costa Transportation Authority
Wheels	Transit Operator: Livermore Amador Valley Transit Authority

This document contains proprietary and confidential information originated or owned by Cubic. Neither this document nor the information disclosed herein shall be reproduced or transferred to other documents or used or disclosed to others for manufacturing or any other purposes except as specifically authorized in writing by Cubic.

1. INTRODUCTION

This design information bulletin (DIB) provides specification of the installation of the Clipper® system components and infrastructure at the transit operators in the East Bay operator group.

At each facility covered by this document Site Preparation requires the Transit Operator to provide space and infrastructure for the installation of various components.

The Server/Switch/ uninterruptible power supply (UPS)/Power-over-Ethernet (PoE) components all require rack space in a secure, environmentally controlled space. If a rack does not exist, a new one must be installed. The Ticket Office Terminal (TOT) requires area in a customer service location.

The Successful Bidder will report directly to the Metropolitan Transportation Commission (MTC) Project Manager or his/her designated representative with questions, guidance, approvals, and acceptance of the completed job. There will be no direct communication with the individual Transit Operators, or Cubic Transportation Systems, Inc. (Cubic). The work will be scheduled in advance, through the MTC Project Manager or his/her designated representative, and will occur in such a manner as to not affect the business conducted by the individual Transit agencies.

This document is written by Cubic. Cubic has no relationship and is not affiliated in any way with any MTC designated representatives and takes no responsibility or liability for any statements, verbal or written, made by any MTC designated representatives or any of their employees. Any approvals or direction that are given by the MTC Project Manager's designated representative are not endorsed or accepted by Cubic, and Cubic reserves the right to accept or reject any work done or equipment supplied by Bidder regardless of any statements made by MTC designated representatives.

Figure 1-1 provides an overall system diagram which is described in detail throughout Section 2.1. Detailed equipment lists of the equipment Cubic shall provide are in 0. The specifications for what equipment the operator must provide can be extrapolated from the tables in Section 4.

This document contains proprietary and confidential information originated or owned by Cubic. Neither this document nor the information disclosed herein shall be reproduced or transferred to other documents or used or disclosed to others for manufacturing or any other purposes except as specifically authorized in writing by Cubic.

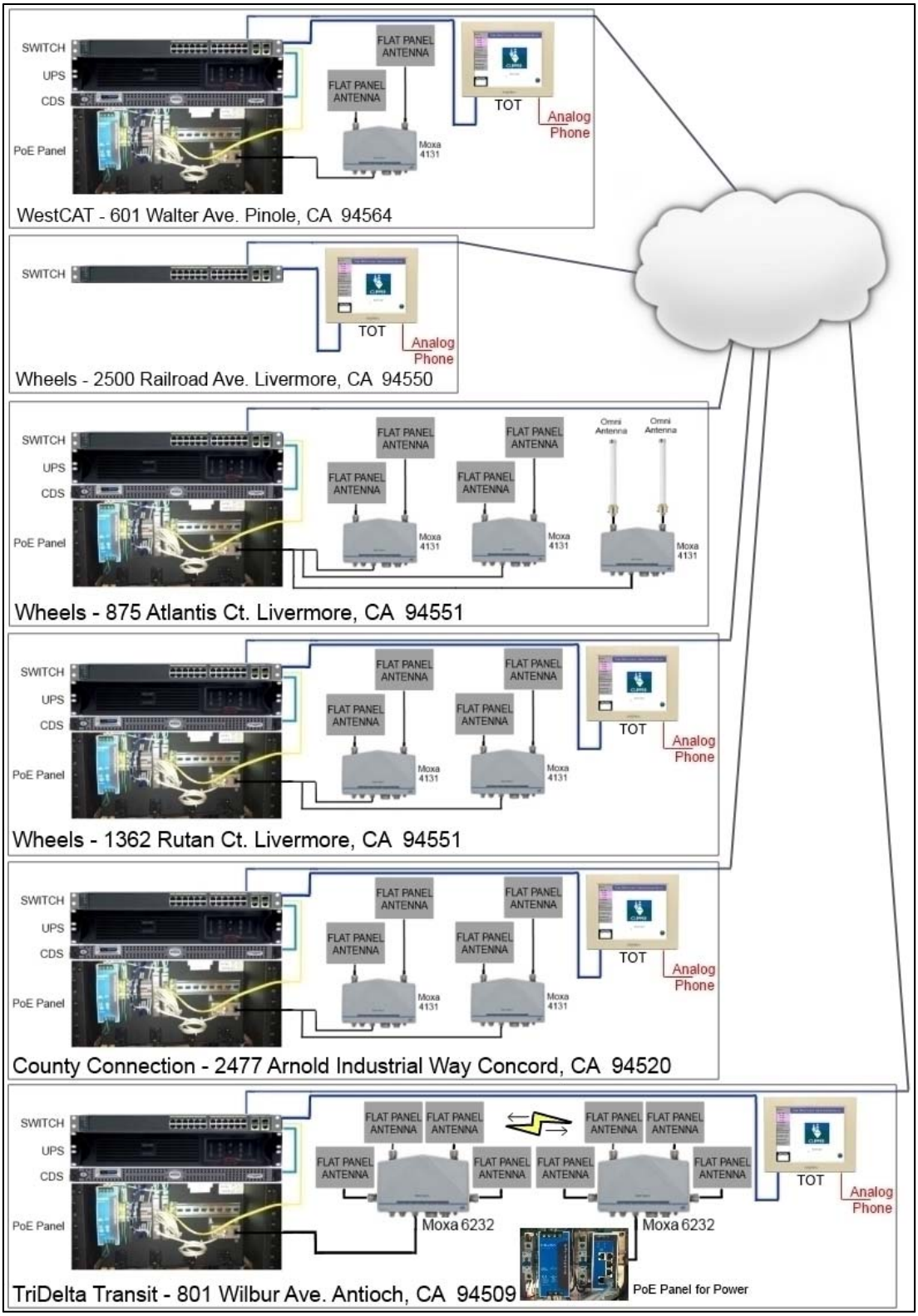

Figure 1-1: East Bay Operator Group System Diagram

This document contains proprietary and confidential information originated or owned by Cubic. Neither this document nor the information disclosed herein shall be reproduced or transferred to other documents or used or disclosed to others for manufacturing or any other purposes except as specifically authorized in writing by Cubic.

1.1 Purpose

This document provides the necessary site preparation information for the phase III rollout of the East Bay operator (County Connection) bus and customer service sites. This document identifies the responsibilities of the Successful Bidder. Responsibilities are outlined in Section 2 of this document.

This document contains information outlining the site preparation requirements for the following facilities:

- County Connection
    - Bus Yard – 2477 Arnold Industrial Way Concord, CA 94520

This document contains proprietary and confidential information originated or owned by Cubic. Neither this document nor the information disclosed herein shall be reproduced or transferred to other documents or used or disclosed to others for manufacturing or any other purposes except as specifically authorized in writing by Cubic.

2. RESPONSIBILITIES

2.1 Successful bidder for county connection

The Successful Bidder is responsible for the preparation of the facilities that will be utilized as part of the Clipper® system. All work should be performed by qualified personnel in accordance with local, state, and federal regulations and codes (e.g., National Electrical Code Article 800 for communication circuits), and industry standard practices. Successful Bidder responsibilities include:

- Procuring and installing the following equipment, as necessary, to support installation of fixed Clipper® equipment (servers, access points, switches, antennas, TOTs)
    - Power supplies to antennas
    - Circuit breakers
    - Communications cabling, Cat6 and twisted pair
    - Wide Area Network (WAN) Routers
    - Conduit
    - Enclosures or shelving units adequate to hold the equipment for each Operator as listed below.
    - Other equipment as necessary
    - Cisco Extend Air R5005 Bridge to antenna locations (as necessary)
- Requesting site readiness inspection when all site preparation work is completed

2.2 Metropolitan transportation commission (mtc)

MTC or its designated representative(s) is responsible for acceptance of the Clipper® network, which includes:

- Preparing this document and the specific documents that show site preparation tasks for each Transit Operator.
- Identifying the infrastructure required to be procured and installed.
- Conducting and documenting pre-installation site inspection.
- Working with the Transit Operator so that the schedule and work is performed to specification.

This document contains proprietary and confidential information originated or owned by Cubic. Neither this document nor the information disclosed herein shall be reproduced or transferred to other documents or used or disclosed to others for manufacturing or any other purposes except as specifically authorized in writing by Cubic.

3. SITE PREPARATION

3.1 SERVER

3.1.1 Rack Space

County Connection Transit will provide the 6 Rack Unit (RU) spaces, in a 19-inch rack frame for the Clipper® equipment. This space shall be in an enclosure or area that provides a temperature controlled environment between 50° to 95°F. The dust particle count must be within acceptable standards for a business office. The rack space is required for:

- One RU space for the Clipper® Data Server (CDS)
- One RU space for a switch
- Two RU space for a UPS
- Five RU space for PoE panel will be installed on back side of rack behind router/switch and due to its length, above or below the CDS (requiring 6 RU in total)

NOTE

In the event that a two post type open rack is used, the Operator will need to supply 11 RU spaces. The PoE panel will be installed above or below the other components on this type of rack.

3.1.2 Power

The Successful Bidder will provide one dedicated circuit breaker, 120 V-ac 20A for the rack mounted components at each location. The Successful Bidder will run power from this sub panel to the rack units, terminated at one 120 v-ac quad receptacle power terminal, Leviton 1254 with a 4x4 gang box or equivalent, mounted inside each of the rack frame or to the frame of a two post rack.

3.1.3 Network

County Connection Transit shall provide network connection between the Minimum Point of Entry (MPOE) and rack, terminated in the rack with a male RJ45 with a minimum 6 feet of slack remaining.

3.2 Wireless Access Points

3.2.1 Network

Successful Bidder shall provide a network connection between the rack and the wireless access point installation location(s).

The rack end of the cable is to be terminated with a shielded RJ45 plug PN 111S08080028L34 (see Appendix A.4) in the rack with a minimum of 6 feet slack remaining.

The end at the access point shall be terminated with a M12 Connector PN 1543236 (see Appendix A.4) with a connector cap - PN 1430873.

The cable between the two should be Belden 7939A. This cable is suited for harsh environments and outdoor installation. Datasheet is in Appendix A.6.

This document contains proprietary and confidential information originated or owned by Cubic. Neither this document nor the information disclosed herein shall be reproduced or transferred to other documents or used or disclosed to others for manufacturing or any other purposes except as specifically authorized in writing by Cubic.

3.2.2 Grounding

Each wireless access point will need a 10ga neutral ground wire run from a suitable grounding point to the installation location, terminated with a #8 stud terminal ring.

3.2.3 Physical Mounting

Clearance around the access point is a minimum of 12in vertically both top and bottom, and 6in from each side of the case. The access point is 8.82” W x 6.64” H x 2.62” D. This creates a window of approx. 30” H x 18” W.

Pole mount(s) shall be the preferred mounting. The pole should be a standard 2-3/8” antenna mast pole, galvanized or stainless steel. Where the device is mounted inside a fuel island only a piece of Unistrut is used.

3.3 Antennas

There are two antenna types that will be used. There is an omni-directional type or a flat panel directional type. Which type used depends on the location and shape of the yard to be covered. As these are 802.11n access points there will be two antennas per access point to utilize MIMO (multiple-input multiple-output). The antennas installed on the coaches also use MIMO.

Each omni-directional antenna weigh 0.63 lbs. (286g) and will be mounted 2’ to 3’ apart on a single cross member mounted to the pole used to mount the a pole.

Each flat panel directional type weighs 2.27 lbs. (1030g) and will be mounted 2’ to 3’ apart using a cross member mounted to a pole.

3.3.1 Physical Mounting

Both the omni-directional and flat panel antennas are to be mounted next to the Wireless Data Transmission System (WDTS) on Unistrut cross members attached to the poles. Figure 3-1 shows a typical directional antenna installation. This image also shows the pole mounted wireless access point. The example shows a different flat panel antenna, the ones Cubic will install will only need one cross member.

This document contains proprietary and confidential information originated or owned by Cubic. Neither this document nor the information disclosed herein shall be reproduced or transferred to other documents or used or disclosed to others for manufacturing or any other purposes except as specifically authorized in writing by Cubic.

Figure 3-1: Typical Flat Panel (left) and Omni Antenna (right) Installations

3.3.2 Power

Power will be needed on a light pole at 5' above ground. The box can be drilled upon installation to accept the wires/conduit through the back, bottom, or side of the box.

The power wires should be wrapped/sealed and left protruding from a sealed connection through the wall of the pole or coming out of conduit that will be attached to the box. If the conduit is used, seal the end of the conduit and wires inside a heavy duty plastic bag. Power will be terminated in the box by installation crew.

WARNING

This power needs to be run to a separate breaker that is locked in the open position and tagged out "DO NOT TURN ON" until the PoE box is installed.

3.3.3 Grounding

The PoE box will need a 10ga neutral ground run to the box location. The termination to a common earth point inside the box will be completed during the PoE box installation.

This document contains proprietary and confidential information originated or owned by Cubic. Neither this document nor the information disclosed herein shall be reproduced or transferred to other documents or used or disclosed to others for manufacturing or any other purposes except as specifically authorized in writing by Cubic.

3.4 TOT

3.4.1 Power

120VAC power will be needed within 3 feet of the TOT. Power will be terminated in a single or double gang box.

3.4.2 Network

Network from the CDS (Server) to the TOT will be needed. The network line is to be terminated with a RJ45 plug and 6 feet of slack, or at a wall plate jack within 3 feet of the TOT.

3.4.3 Telephone

The TOT requires an analog telephone line in order to handle any credit/debit transactions. Phone line is to be terminated in a box or wall plate within 3 feet of the TOT.

3.4.4 Physical Mounting

The TOT sits on a stand and has a keyboard, mouse, card reader, and printer. The system needs an area 2ft. x 2ft.

3.5 Completion

Once the Successful Bidder confirms that the site preparation work is complete, Bidder will notify MTC or its designated representative(s) that the site is ready for a site inspection. If MTC or its designated representative(s) determines that the site preparation is not complete, or has been done incorrectly, Bidder will correct the site preparation.

This document contains proprietary and confidential information originated or owned by Cubic. Neither this document nor the information disclosed herein shall be reproduced or transferred to other documents or used or disclosed to others for manufacturing or any other purposes except as specifically authorized in writing by Cubic.

4. OPERATOR FACILITIES

4.1 County Connection

4.1.1 Server Rack

The server, UPS, and PoE components will be installed in the existing rack in the existing server room on the 2nd floor. County Connection Transit will use their existing rack, and the rack space has already been allocated.

4.1.2 Ticket Office Terminal

The TOT will be installed in a location yet to be determined.

The TOT will require a 2' x 2' area to install the computer and peripherals.

An analog phone line must be provided for the TOT.

A solution for networking between the server and TOT is to be provided by the operator.

4.1.3 Bus Communication Wireless

Testing was done with the access point on the roof of the Administration building at the West end of the yard. As there were no access points in the 5.0 GHz spectrum it was used for the test. Due to the size of the yard, an additional access point shall be installed on the Maintenance Building on the East side of the yard.

This document contains proprietary and confidential information originated or owned by Cubic. Neither this document nor the information disclosed herein shall be reproduced or transferred to other documents or used or disclosed to others for manufacturing or any other purposes except as specifically authorized in writing by Cubic.

Figure 4-1: County Connection Wireless Access Point and Antenna Locations #1

Figure 4-2: County Connection Wireless Access Point and Antenna Location #2

Figure 4-3: County Connection 2.4 GHz and 5 GHz Radios

This document contains proprietary and confidential information originated or owned by Cubic. Neither this document nor the information disclosed herein shall be reproduced or transferred to other documents or used or disclosed to others for manufacturing or any other purposes except as specifically authorized in writing by Cubic.

Figure 4-4: County Connection Signal Strength

Table 4-1. County Connection Operator Site Preparation Tasks

Task	Location	Description
Provide 5 RU or 10 RU in rack (County Connection is using their existing Rack)	Server Room	• Rack to be 30" deep • 5 RU to house the server, ups, and PoE rack if it can be installed from both sides in a full frame or 4 post rack • If only one side is accessible or available as in a 2 post rack, 10 RU will be required
Provide Power to Rack	Inside cabinet or on frame	• 2 Gang 4 outlet inside of rack cabinet or attached to rack frame • Fed by dedicated 20A circuit
Provide Network to Rack (County Connection will be using their existing Network)	Between MPOE and Rack	• Provide network connection between MPOE switch location • Terminate with a RJ45 plug with at least 6ft. of slack • County Connection would like to use their existing network
Provide Network to Wireless Access Point at Location #1 and #2	From rack to mounting locations	• Provide network connection between switch and both access points • Cable to be Belden 7929A. Run between locations per codes and best practices • Terminate at rack end with RJ45 plugs - Sentinel Connector Systems Inc. P/N 111S08080028L34 – MFG data sheet is in 0 with at least 6ft. of slack • Terminate at both access point locations with M12 connector - Phoenix Contact P/N 1543236 with 2 ft. of slack • Install connector cap on M12 connectors
Provide Wireless Access Point Mount at Location #1	Above roof line as shown in Figure 4-1	• Provide pipe to mount WDTS and two antennas • Pipe to be 2-3/8" OD • Pipe to be mounted vertically on top of roof with braces • Pipe to protrude at least 4 feet 6 inches above the roof line

This document contains proprietary and confidential information originated or owned by Cubic. Neither this document nor the information disclosed herein shall be reproduced or transferred to other documents or used or disclosed to others for manufacturing or any other purposes except as specifically authorized in writing by Cubic.

Provide Wireless Access Point Mount at Location #2	Above roof line as shown in Figure 4-2	• Provide pipe to mount WDTS and two antennas • Pipe to be 2-3/8" OD • Pipe to be mounted vertically on top of roof with braces • Pipe to protrude at least 4 feet 6 inches above the roof line
Provide antenna mounting frames at Locations #1 and #2	On each of 2 pipes above	• Provide and mount a Unistrut P1000T cross member 3 feet long 6" from top of each pipe above • Mount center of Unistrut to pipe so both arms are of equal length
Provide Power for TOT	Within 2 ft. of TOT location	• An outlet for a power strip for the TOT as there are two power supplies and the computer itself to plug in
Provide Network to TOT	From rack to TOT	• Provide network connection between Rack and TOT • Terminate at rack end with RJ45 plug with at least 6ft. of slack • Terminate at TOT location with RJ45 plug with at least 6ft. of slack
Provide Analog Phone Line for TOT	Within 6ft. of TOT location	• Analog phone line is required for the credit/debit functionality of the TOT • Terminate in a wall plate or box with RJ11 jack

This document contains proprietary and confidential information originated or owned by Cubic. Neither this document nor the information disclosed herein shall be reproduced or transferred to other documents or used or disclosed to others for manufacturing or any other purposes except as specifically authorized in writing by Cubic.

APPENDIX A MANUFACTURER DATA SHEETS

A.1 MOXA

Moxa 4131 Wireless Access Point

Moxa 6232 Wireless Access Point

Moxa PoE Power Supply

Moxa PoE Injector

Moxa Omni Antenna.pdf

Moxa Flat Panel Antenna.pdf

Moxa Pole Mount

A.2 DINSPACE

DIN Rack Adapter

A.3 DEHN

Ethernet DIN Rack Surge Suppressor

A.4 PHOENIX CONTACT

WDTS M12 Ethernet Connector

M12 Connector Cap

A.5 SENTINEL CONNECTOR

WDTS RJ45 Connector in Rack

A.6 BELDEN

Belden 7929A Outdoor Ethernet Cal

This document contains proprietary and confidential information originated or owned by Cubic. Neither this document nor the information disclosed herein shall be reproduced or transferred to other documents or used or disclosed to others for manufacturing or any other purposes except as specifically authorized in writing by Cubic.

Appendix A-3

Scope of Work and Specifications

WestCat

601 Walter Ave., Pinole, CA 94564

See Appendix A-6 for Manufacturer Data Sheets

West Cat Site Preparation

DR 64 / CDRL 60

Document Number: 9614-37028

Revision: A.00

Date: 24 Nov 2014

CUBIC™

Intelligent travel made real™

CONTENTS

1. INTRODUCTION A-1
1.1 PURPOSE A-3

2. RESPONSIBILITIES A-4
2.1 SUCCESSFUL BIDDER FOR WESTCAT A-4
2.2 METROPOLITAN TRANSPORTATION COMMISSION (MTC) A-4

3. SITE PREPARATION A-5
3.1 SERVER A-5
3.1.1 Rack Space A-5
3.1.2 Power A-5
3.1.3 Network A-5
3.2 WIRELESS ACCESS POINTS A-5
3.2.1 Network A-5
3.2.2 Grounding A-6
3.2.3 Physical Mounting A-6
3.3 ANTENNAS A-6
3.3.1 Physical Mounting A-6
3.3.2 Power A-7
3.3.3 Grounding A-7
3.4 TOT A-8
3.4.1 Power A-8
3.4.2 Network A-8
3.4.3 Telephone A-8
3.4.4 Physical Mounting A-8
3.5 COMPLETION A-8

4. OPERATOR FACILITIES A-9
4.1 WESTCAT A-9
4.1.1 Server Rack A-9
4.1.2 Ticket Office Terminal A-9
4.1.3 Bus Communication Wireless A-9

Appendix

APPENDIX A **Manufacturer Data Sheets A-12**
A.1 MOXA A-12
A.2 DINSPACE A-12
A.3 DEHN A-12
A.4 PHOENIX CONTACT A-12
A.5 SENTINEL CONNECTOR A-12
A.6 BELDEN A-12

This document contains proprietary and confidential information originated or owned by Cubic. Neither this document nor the information disclosed herein shall be reproduced or transferred to other documents or used or disclosed to others for manufacturing or any other purposes except as specifically authorized in writing by Cubic.

Figures

Figure 1-1: East Bay Operator Group System Diagram A-2
Figure 3-1: Typical Flat Panel (left) and Omni Antenna (right) Installations A-7
Figure 4-1: WestCAT WDTS and Antenna Location A-9
Figure 4-2: WestCAT 2.4 GHz and 5 GHz Radios.....A-10
Figure 4-3: WestCAT Signal Strength.....A-10

Tables

Table 4-1. WestCAT Operator Site Preparation Tasks.....A-10

This document contains proprietary and confidential information originated or owned by Cubic. Neither this document nor the information disclosed herein shall be reproduced or transferred to other documents or used or disclosed to others for manufacturing or any other purposes except as specifically authorized in writing by Cubic.

Acronyms and Abbreviations

Cat6	Category 6 Network Cable
CDS	Clipper® Data Server
County Connection	Transit Operator: Central Contra County Transportation Authority
Cubic	Cubic Transportation Systems, Inc.
DIB	Design Information Bulletin
HCR	Handheld Card Reader
MIMO	Multiple-Input Multiple-Output
MPOE	Minimum Point Of Entry (where phone/internet provider will cable to)
MTC	Metropolitan Transportation Commission
OD	Outside Diameter
Operator	Transit Operator
PoE	Power-over-Ethernet
RU	Rack Unit (space in server rack approx.. 2” high)
TOT	Ticket Office Terminal (usually pronounced “tote”)
Tri Delta	Transit Operator: Eastern Contra Costa Transit Authority
UPS	uninterruptible power supply
WAN	Wide Area Network
WDTS	Wireless Data Transmission System (Clipper® Access Point)
WestCAT	Transit operator: Western Contra Costa Transportation Authority
Wheels	Transit Operator: Livermore Amador Valley Transit Authority

This document contains proprietary and confidential information originated or owned by Cubic. Neither this document nor the information disclosed herein shall be reproduced or transferred to other documents or used or disclosed to others for manufacturing or any other purposes except as specifically authorized in writing by Cubic.

1. INTRODUCTION

This design information bulletin (DIB) provides specification of the installation of the Clipper® system components and infrastructure at the transit operators in the East Bay operator group.

At each facility covered by this document Site Preparation requires the Transit Operator to provide space and infrastructure for the installation of various components.

The Server/Switch/ uninterruptible power supply (UPS)/Power-over-Ethernet (PoE) components all require rack space in a secure, environmentally controlled space. If a rack does not exist, a new one must be installed. The Ticket Office Terminal (TOT) requires area in a customer service location. The Handheld Card Reader 4s (HCR4s) should be installed where secure, but accessible to those who will use them.

The Successful Bidder will report directly to the Metropolitan Transportation Commission (MTC) Project Manager or his/her designated representative with questions, guidance, approvals, and acceptance of the completed job. There will be no direct communication with the individual Transit Operators, or Cubic Transportation Systems, Inc. (Cubic). The work will be scheduled in advance, through the MTC Project Manager or his/her designated representative, and will occur in such a manner as to not affect the business conducted by the individual Transit agencies.

This document is written by Cubic. Cubic has no relationship and is not affiliated in any way with any MTC designated representatives and takes no responsibility or liability for any statements, verbal or written, made by any MTC designated representatives or any of their employees. Any approvals or direction that are given by the MTC Project Manager's designated representative are not endorsed or accepted by Cubic, and Cubic reserves the right to accept or reject any work done or equipment supplied by Bidder regardless of any statements made by MTC designated representatives.

Figure 1-1 provides an overall system diagram which is described in detail throughout Section 2.2. Detailed equipment lists of the equipment Cubic shall provide are in APPENDIX A. The specifications for what equipment the operator must provide can be extrapolated from the tables in Section 4.

This document contains proprietary and confidential information originated or owned by Cubic. Neither this document nor the information disclosed herein shall be reproduced or transferred to other documents or used or disclosed to others for manufacturing or any other purposes except as specifically authorized in writing by Cubic.

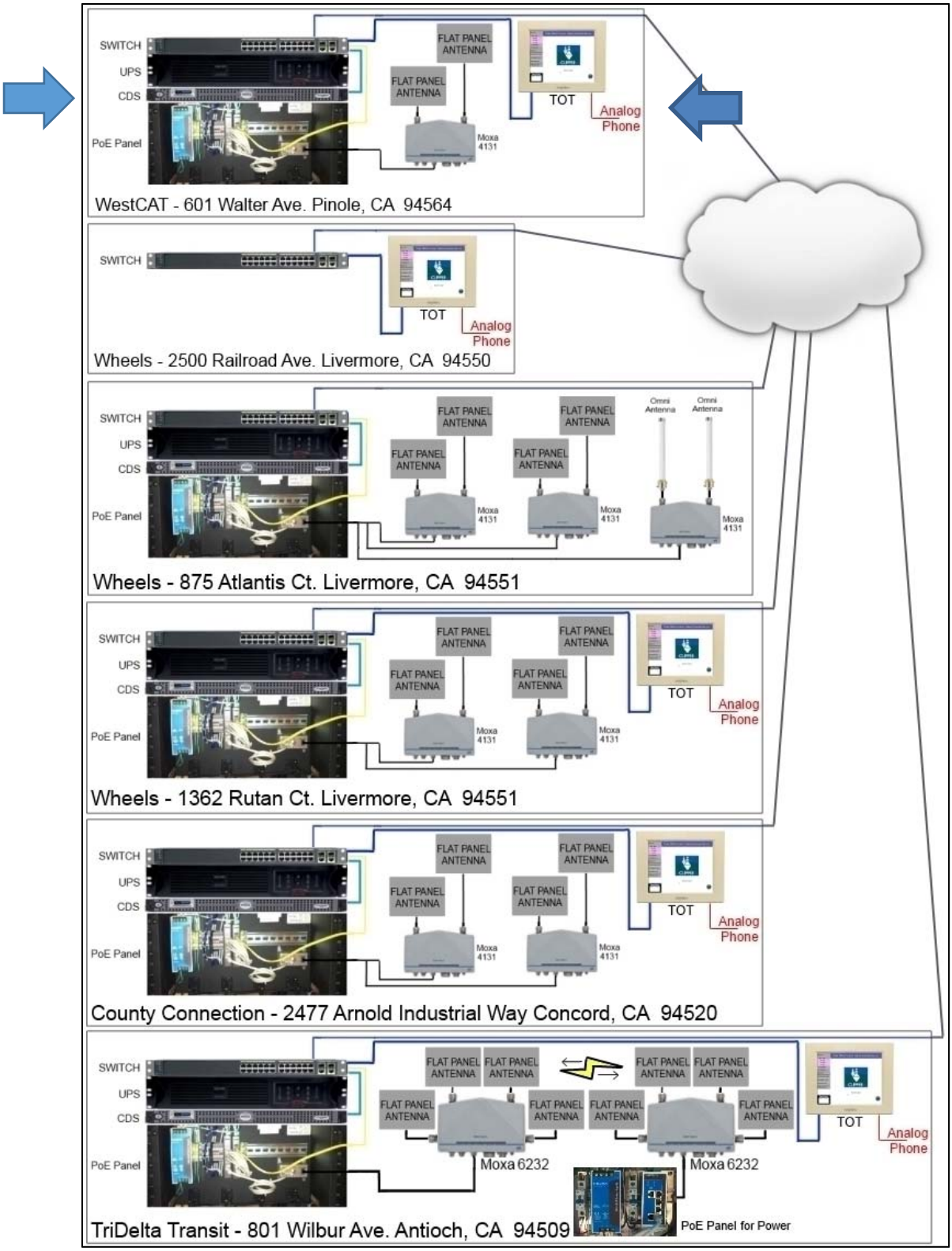

Figure 1-1: East Bay Operator Group System Diagram

This document contains proprietary and confidential information originated or owned by Cubic. Neither this document nor the information disclosed herein shall be reproduced or transferred to other documents or used or disclosed to others for manufacturing or any other purposes except as specifically authorized in writing by Cubic.

1.1 Purpose

This document provides the necessary site preparation information for the phase III rollout of the East Bay operator (WestCAT) bus and customer service sites. This document identifies the responsibilities of the Successful Bidder. Responsibilities are outlined in Section 0 of this document.

This document contains information outlining the site preparation requirements for the following facilities:

- WestCat Transit
    - Bus Yard – 601 Walter Ave., Pinole 94564

This document contains proprietary and confidential information originated or owned by Cubic. Neither this document nor the information disclosed herein shall be reproduced or transferred to other documents or used or disclosed to others for manufacturing or any other purposes except as specifically authorized in writing by Cubic.

2. RESPONSIBILITIES

2.1 Successful Bidder for Westcat

The Successful Bidder is responsible for the preparation of their facilities that will be utilized as part of the Clipper® system. All work should be performed by qualified personnel in accordance with local, state, and federal regulations and codes (e.g., National Electrical Code Article 800 for communication circuits), and industry standard practices. Operator responsibilities include:

- Procuring and installing the following equipment, as necessary, to support installation of fixed Clipper® equipment (servers, access points, switches, antennas, and TOTs.
  - Power supplies
  - Circuit breakers
  - Communications cabling, Cat6 and twisted pair
  - Wide Area Network (WAN) Routers
  - Conduit
  - Enclosures or shelving units adequate to hold the equipment for each Operator as listed below.
  - Cisco Extend Air R5005 Bridge to antenna locations (as necessary)
  - Other equipment as necessary
- Requesting site readiness inspection when all site preparation work is completed

2.2 Metropolitan Transportation Commission (MTC)

MTC or its designated representative(s) is responsible for acceptance of the Clipper® network, which includes:

- Preparing this document and the specific documents that show site preparation tasks for each Transit Operator.
- Identifying the infrastructure required to be procured and installed.
- Conducting and documenting pre-installation site inspection.
- Working with the Transit Operator so that the schedule and work is performed to specification.

This document contains proprietary and confidential information originated or owned by Cubic. Neither this document nor the information disclosed herein shall be reproduced or transferred to other documents or used or disclosed to others for manufacturing or any other purposes except as specifically authorized in writing by Cubic.

3. SITE PREPARATION

3.1 SERVER

3.1.1 Rack Space

At each bus facility, WestCat will provide 6 Rack Unit (RU) spaces, in a 19-inch rack frame for the Clipper® equipment. This space shall be in an enclosure or area that provides a temperature controlled environment between 50° to 95°F. The dust particle count must be within acceptable standards for a business office. The rack space is required for:

- One RU space for the Clipper® Data Server (CDS)
- One RU space for a switch
- Two RU space for a UPS
- Five RU space for PoE panel will be installed on back side of rack behind router/switch and due to its length, above or below the CDS (requiring 6 RU in total)

NOTE

In the event that a two post type open rack is used, the Operator will need to supply 11 RU spaces. The PoE panel will be installed above or below the other components on this type of rack.

3.1.2 Power

WestCat will provide one dedicated circuit breaker, 120 V-ac 20A for the rack mounted components at each location. The Operator will run power from this sub panel to the rack units, terminated at one 120 v-ac quad receptacle power terminal, Leviton 1254 with a 4x4 gang box or equivalent, mounted inside each of the rack frame or to the frame of a two post rack.

3.1.3 Network

WestCat shall provide network connection between the Minimum Point of Entry (MPOE) and rack, terminated in the rack with a male RJ45 with a minimum 6 feet of slack remaining.

3.2 Wireless Access Points

3.2.1 Network

Successful Bidder shall provide a network connection between the rack and the wireless access point installation location(s).

The rack end of the cable is to be terminated with a shielded RJ45 plug PN 111S08080028L34 (see Appendix A.4) in the rack with a minimum of 6 feet slack remaining.

The end at the access point shall be terminated with a M12 Connector PN 1543236 (see Appendix A.4) with a connector cap - PN 1430873.

The cable between the two should be Belden 7939A. This cable is suited for harsh environments and outdoor installation. Datasheet is in Appendix A.6.

This document contains proprietary and confidential information originated or owned by Cubic. Neither this document nor the information disclosed herein shall be reproduced or transferred to other documents or used or disclosed to others for manufacturing or any other purposes except as specifically authorized in writing by Cubic.

3.2.2 Grounding

Each wireless access point will need a 10ga neutral ground wire run from a suitable grounding point to the installation location, terminated with a #8 stud terminal ring.

3.2.3 Physical Mounting

Clearance around the access point is a minimum of 12in vertically both top and bottom, and 6in from each side of the case. The access point is 8.82” W x 6.64” H x 2.62” D. This creates a window of approx. 30” H x 18” W.

Pole mount(s) shall be the preferred mounting. The pole should be a standard 2-3/8” antenna mast pole, galvanized or stainless steel. Where the device is mounted inside a fuel island only a piece of Unistrut is used.

3.3 Antennas

There are two antenna types that will be used. There is an omni-directional type or a flat panel directional type. Which type used depends on the location and shape of the yard to be covered. As these are 802.11n access points there will be two antennas per access point to utilize MIMO (multiple-input multiple-output). The antennas installed on the coaches also use MIMO.

Each omni-directional antenna weigh 0.63 lbs. (286g) and will be mounted 2’ to 3’ apart on a single cross member mounted to the pole used to mount the a pole.

Each flat panel directional type weighs 2.27 lbs. (1030g) and will be mounted 2’ to 3’ apart using a cross member mounted to a pole.

3.3.1 Physical Mounting

Both the omni-directional and flat panel antennas are to be mounted next to the Wireless Data Transmission System (WDTS) on Unistrut cross members attached to the poles. Figure 3-1 shows a typical directional antenna installation. This image also shows the pole mounted wireless access point. The example shows a different flat panel antenna, the ones Cubic will install will only need one cross member.

This document contains proprietary and confidential information originated or owned by Cubic. Neither this document nor the information disclosed herein shall be reproduced or transferred to other documents or used or disclosed to others for manufacturing or any other purposes except as specifically authorized in writing by Cubic.

Figure 3-1: Typical Flat Panel (left) and Omni Antenna (right) Installations

3.3.2 Power

Power will be needed on a light pole at 5' above ground. The box can be drilled upon installation to accept the wires/conduit through the back, bottom, or side of the box.

The power wires should be wrapped/sealed and left protruding from a sealed connection through the wall of the pole or coming out of conduit that will be attached to the box. If the conduit is used, seal the end of the conduit and wires inside a heavy duty plastic bag. Power will be terminated in the box by installation crew.

WARNING

This power needs to be run to a separate breaker that is locked in the open position and tagged out "DO NOT TURN ON" until the PoE box is installed.

3.3.3 Grounding

The PoE box will need a 10ga neutral ground run to the box location. The termination to a common earth point inside the box will be completed during the PoE box installation.

This document contains proprietary and confidential information originated or owned by Cubic. Neither this document nor the information disclosed herein shall be reproduced or transferred to other documents or used or disclosed to others for manufacturing or any other purposes except as specifically authorized in writing by Cubic.

3.4 TOT

3.4.1 Power

120VAC power will be needed within 3 feet of the TOT. Power will be terminated in a single or double gang box.

3.4.2 Network

Network from the CDS (Server) to the TOT will be needed. The network line is to be terminated with a RJ45 plug and 6 feet of slack, or at a wall plate jack within 3 feet of the TOT.

3.4.3 Telephone

The TOT requires an analog telephone line in order to handle any credit/debit transactions. Phone line is to be terminated in a box or wall plate within 3 feet of the TOT.

3.4.4 Physical Mounting

The TOT sits on a stand and has a keyboard, mouse, card reader, and printer. The system needs an area 2ft. x 2ft.

3.5 Completion

Once the Successful Bidder confirms that the site preparation work is complete, Bidder will notify MTC or its designated representative(s) that the site is ready for a site inspection. If MTC or its designated representative(s) determines that the site preparation is not complete, or has been done incorrectly, Bidder will correct the site preparation.

This document contains proprietary and confidential information originated or owned by Cubic. Neither this document nor the information disclosed herein shall be reproduced or transferred to other documents or used or disclosed to others for manufacturing or any other purposes except as specifically authorized in writing by Cubic.

4. OPERATOR FACILITIES

4.1 WestCat

4.1.1 Server Rack

The server and other components will be installed in a rack in the server room in the bus garage.

4.1.2 Ticket Office Terminal

The TOT will be installed in the front office and will require a 2’ x 2’ area to install the computer and peripherals.

An analog phone line must be provided for the TOT.

Network cabling between the server and TOT will be needed.

4.1.3 Bus Communication Wireless

With the access point approximately 6 feet above the roof line on the southeast side of the administration building the site gave a reading of -55 dbi at the first bus location to -84dbi at the furthest point across the yard. This test was performed on the 5GHz channel as the 2.4GHz was too crowded. This location meets the height required for a good line of site to the roof of the buses. One access point will provide the necessary coverage for data transmission to and from the buses.

Figure 4-1: WestCAT WDTS and Antenna Location

The 2.4 GHz spectrum in this yard is oversaturated. The 5 GHz spectrum has only four other access points visible.

This document contains proprietary and confidential information originated or owned by Cubic. Neither this document nor the information disclosed herein shall be reproduced or transferred to other documents or used or disclosed to others for manufacturing or any other purposes except as specifically authorized in writing by Cubic.

Figure 4-2: WestCAT 2.4 GHz and 5 GHz Radios

Figure 4-3: WestCAT Signal Strength

Table 4-1. WestCAT Operator Site Preparation Tasks

Task	Location	Description
Provide 6 RU or 11 RU in rack	Server Room	• Rack to be 30” deep • 6 RU to house the server, switch, ups, and PoE rack if it can be installed from both sides in a full frame or 4 post rack • If only one side is accessible or available as in a 2 post rack, 11 RU will be required
Provide Power to Rack	Inside cabinet or on frame	• 2 Gang 4 outlet inside of rack cabinet or attached to rack frame • Fed by dedicated 20A circuit
Provide Network to Rack	Inside cabinet or on frame	• Provide network connection between MPOE and the rack cabinet or frame • Terminate with a RJ45 plug with at least 6ft. of slack

This document contains proprietary and confidential information originated or owned by Cubic. Neither this document nor the information disclosed herein shall be reproduced or transferred to other documents or used or disclosed to others for manufacturing or any other purposes except as specifically authorized in writing by Cubic.

Provide Network to Wireless Access Point	From rack to mounting location	• Provide network connection between switch and WDTS • Cable to be Belden 7929A. Run between two locations per codes and best practices • Terminate at rack end with RJ45 plug - Sentinel Connector Systems Inc. P/N 111S08080028L34 – MFG data sheet is in APPENDIX A with at least 6ft. of slack • Terminate at WDTS location with M12 connector - Phoenix Contact P/N 1543236 with 2 ft. of slack • Install connector cap on M12 connectors
Provide Wireless Access Point Mounting Location	South-East corner of building	• Provide pipe to mount WDTS and antenna mount • Pipe to be 2-3/8" outside diameter (OD) pipe • Pipe to be long/tall enough to extend 6 feet above roof edge • Pipe to be mounted using braces/brackets as per code and best practice as Operator deems correct
Provide antenna mounting frame	On pipe above	• Provide and mount a Unistrut P1000T cross member 3 feet long • Mount center of Unistrut to pipe so both arms are of equal length
Provide Power for TOT	Within 2 ft. of TOT location	• An outlet for a power strip for the TOT as there are 2 power supplies and the computer itself to plug in
Provide Network to TOT	From rack to TOT	• Provide network connection between switch and TOT • Terminate at rack end with RJ45 plug with at least 6ft. of slack • Terminate at TOT location with RJ45 plug with at least 6ft. of slack
Provide Analog Phone Line for TOT	Within 6ft. of TOT location	• Analog phone line is required for the credit/debit functionality of the TOT • Terminate in a wall plate or box with RJ11 jack

This document contains proprietary and confidential information originated or owned by Cubic. Neither this document nor the information disclosed herein shall be reproduced or transferred to other documents or used or disclosed to others for manufacturing or any other purposes except as specifically authorized in writing by Cubic.

APPENDIX A MANUFACTURER DATA SHEETS

A.1 MOXA

Moxa 4131 Wireless Access Point

Moxa 6232 Wireless Access Point

Moxa PoE Power Supply

Moxa PoE Injector

Moxa Omni Antenna.pdf

Moxa Flat Panel Antenna.pdf

Moxa Pole Mount

A.2 DINSPACE

DIN Rack Adapter

A.3 DEHN

Ethernet DIN Rack Surge Suppressor

A.4 PHOENIX CONTACT

WDTS M12 Ethernet Connector

M12 Connector Cap

A.5 SENTINEL CONNECTOR

WDTS RJ45 Connector in Rack

A.6 BELDEN

Belden 7929A Outdoor Ethernet Cal

This document contains proprietary and confidential information originated or owned by Cubic. Neither this document nor the information disclosed herein shall be reproduced or transferred to other documents or used or disclosed to others for manufacturing or any other purposes except as specifically authorized in writing by Cubic.

Appendix A-4

Scope of Work and Specifications

Livermore –Amador Valley Transit Authority Site Preparation

1) **1362 Rutan Ct., Livermore, CA 94551**
2) **2500 Railroad Ave., Livermore, CA 94550**

See Appendix A-6 for Manufacturer Data Sheets

Livermore (Rutan and Transit Center) Site Preparation

DR 64 / CDRL 60

Document Number: 9614-37028

Revision: A.00

CUBIC

Intelligent travel made real™

CONTENTS

1. INTRODUCTION 1
1.1 PURPOSE 3

2. RESPONSIBILITIES 4
2.1 EAST BAY OPERATOR GROUP 4
2.2 METROPOLITAN TRANSPORTATION COMMISSION (MTC) 4

3. SITE PREPARATION 5
3.1 SERVER 5
3.1.1 Rack Space 5
3.1.2 Power 5
3.1.3 Network 5
3.2 WIRELESS ACCESS POINTS 5
3.2.1 Network 5
3.2.2 Grounding 6
3.2.3 Physical Mounting 6
3.3 ANTENNAS 6
3.3.1 Physical Mounting 6
3.3.2 Power 7
3.3.3 Grounding 7
3.4 TOT 8
3.4.1 Power 8
3.4.2 Network 8
3.4.3 Telephone 8
3.4.4 Physical Mounting 8
3.5 COMPLETION 8

4. OPERATOR FACILITIES 9
4.1 WHEELS – RUTAN CT 9
4.1.1 Server Space 9
4.1.2 Bus Communication Wireless 9
4.2 WHEELS – TRANSIT CENTER 13
4.2.1 Switch 13
4.2.2 Ticket Office Terminal 13
4.1 Wheels – Rutan Ct. 9
4.1.1 Server Space 9
4.1.2 Bus Communication Wireless 9
4.2 Wheels – Transit Center 13
4.2.1 Switch 13
4.2.2 Ticket Office Terminal 13

Appendix

APPENDIX A **Manufacturer Data Sheets 14**

This document contains proprietary and confidential information originated or owned by Cubic. Neither this document nor the information disclosed herein shall be reproduced or transferred to other documents or used or disclosed to others for manufacturing or any other purposes except as specifically authorized in writing by Cubic.

A.1 MOXA 14
A.2 DINSPACE 14
A.3 DEHN 14
A.4 PHOENIX CONTACT 14
A.5 SENTINEL CONNECTOR 14
A.6 BELDEN 14

Figures

Figure 1-1: East Bay Operator Group System Diagram 2
Figure 3-1: Typical Flat Panel (left) and Omni Antenna (right) Installations 7
Figure 4-8: Wheels – Rutan Wireless Access Point and Antenna Locations #1 9
Figure 4-9: Wheels – Rutan Wireless Access Point and Antenna Location #2 10
Figure 4-10: Wheels – Rutan 2.4 GHz and 5 GHz Radios 10
Figure 4-11: Wheels – Rutan Ct. Signal Strength 11

Tables

Table 4-3. Wheels – Rutan Ct. Operator Site Preparation Tasks 11
Table 4-4. Wheels – Transit Center Operator Site Preparation Tasks 13

This document contains proprietary and confidential information originated or owned by Cubic. Neither this document nor the information disclosed herein shall be reproduced or transferred to other documents or used or disclosed to others for manufacturing or any other purposes except as specifically authorized in writing by Cubic.

Acronyms and Abbreviations

Cat6	Category 6 Network Cable
CDS	Clipper® Data Server
County Connection	Transit Operator: Central Contra County Transportation Authority
Cubic	Cubic Transportation Systems, Inc.
DIB	Design Information Bulletin
HCR	Handheld Card Reader
MIMO	Multiple-Input Multiple-Output
MPOE	Minimum Point Of Entry (where phone/internet provider will cable to)
MTC	Metropolitan Transportation Commission
OD	Outside Diameter
Operator	Transit Operator
PoE	Power-over-Ethernet
RU	Rack Unit (space in server rack approx.. 2” high)
TOT	Ticket Office Terminal (usually pronounced “tote”)
Tri Delta	Transit Operator: Eastern Contra Costa Transit Authority
UPS	uninterruptible power supply
WAN	Wide Area Network
WDTS	Wireless Data Transmission System (Clipper® Access Point)
WestCAT	Transit operator: Western Contra Costa Transportation Authority
Wheels	Transit Operator: Livermore Amador Valley Transit Authority

This document contains proprietary and confidential information originated or owned by Cubic. Neither this document nor the information disclosed herein shall be reproduced or transferred to other documents or used or disclosed to others for manufacturing or any other purposes except as specifically authorized in writing by Cubic.

1. INTRODUCTION

This design information bulletin (DIB) provides specification of the installation of the Clipper® system components and infrastructure at the transit operators in the East Bay operator group.

At each facility covered by this document Site Preparation requires the Transit Operator provide space and infrastructure for the installation of various components.

The Server/Switch/ uninterruptible power supply (UPS)/Power-over-Ethernet (PoE) components all require rack space in a secure, environmentally controlled space. If a rack does not exist, a new one must be installed. The Ticket Office Terminal (TOT) requires area in a customer service location.

The Successful Bidder will report directly to the Metropolitan Transportation Commission (MTC) Project Manager or his/her designated representative with questions, guidance, approvals, and acceptance of the completed job. There will be no direct communication with the individual Transit Operators, or Cubic Transportation Systems, Inc. (Cubic). The work will be scheduled in advance, through the MTC Project Manager or his/her designated representative, and will occur in such a manner as to not affect the business conducted by the individual Transit agencies.

This document is written by Cubic. Cubic has no relationship and is not affiliated in any way with any MTC designated representatives and takes no responsibility or liability for any statements, verbal or written, made by any MTC designated representatives or any of their employees. Any approvals or direction that are given by the MTC Project Manager's designated representative are not endorsed or accepted by Cubic, and Cubic reserves the right to accept or reject any work done or equipment supplied by Bidder regardless of any statements made by MTC designated representatives.

Figure 1-1 provides an overall system diagram which is described in detail throughout Section 3. Detailed equipment lists of the equipment Cubic shall provide are in APPENDIX A. The specifications for what equipment the operator must provide can be extrapolated from the tables in Section 4.

This document contains proprietary and confidential information originated or owned by Cubic. Neither this document nor the information disclosed herein shall be reproduced or transferred to other documents or used or disclosed to others for manufacturing or any other purposes except as specifically authorized in writing by Cubic.

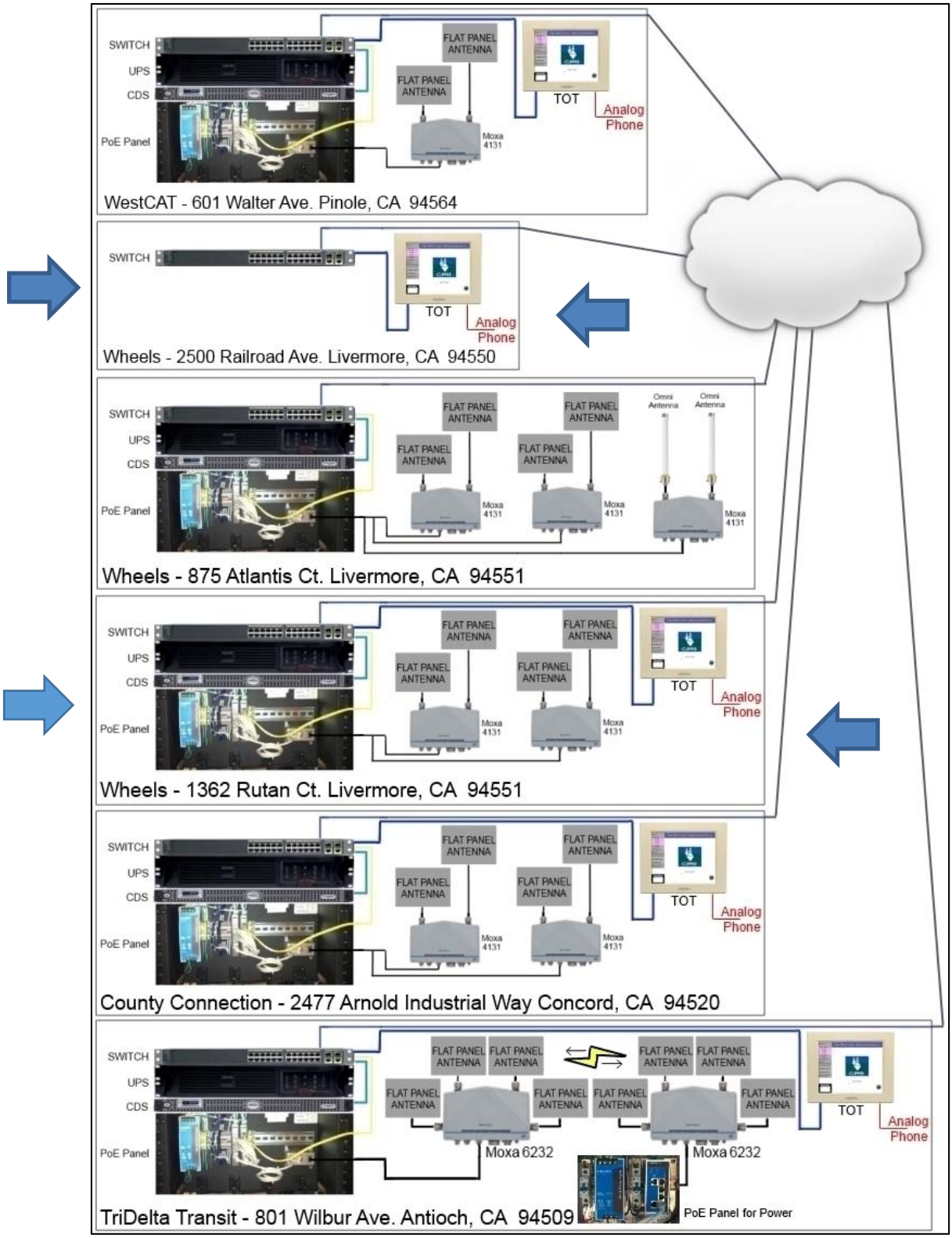

Figure 1-1: East Bay Operator Group System Diagram

This document contains proprietary and confidential information originated or owned by Cubic. Neither this document nor the information disclosed herein shall be reproduced or transferred to other documents or used or disclosed to others for manufacturing or any other purposes except as specifically authorized in writing by Cubic.

1.1 Purpose

This document provides the necessary site preparation information for the phase III rollout of the East Bay operator (Wheels) bus and customer service sites. This document identifies the responsibilities of the Successful Bidder. Responsibilities are outlined in Section 2 of this document.

This document contains information outlining the site preparation requirements for the following facilities:

- Wheels
    - Bus Yard – 1362 Rutan Ct. Livermore, CA 94551
    - Transit Center – 2500 Railroad Ave. Livermore, CA 94550

This document contains proprietary and confidential information originated or owned by Cubic. Neither this document nor the information disclosed herein shall be reproduced or transferred to other documents or used or disclosed to others for manufacturing or any other purposes except as specifically authorized in writing by Cubic.

2. RESPONSIBILITIES

2.1 East Bay Operator Group

The Successful Bidder is responsible for the preparation of their facilities that will be utilized as part of the Clipper® system. All work should be performed by qualified personnel in accordance with local, state, and federal regulations and codes (e.g., National Electrical Code Article 800 for communication circuits), and industry standard practices. Operator responsibilities include:

- Procuring and installing the following equipment, as necessary, to support installation of fixed Clipper® equipment (servers, access points, switches, antennas, TOTs)
  - Power supplies
  - Circuit breakers
  - Communications cabling, Cat6 and twisted pair
  - Wide Area Network (WAN) Routers
  - Conduit
  - Enclosures or shelving units adequate to hold the equipment for each Operator as listed below.
  - Cisco Extend Air R5005 Bridge to antenna locations (as necessary)
  - Other equipment as necessary
- Requesting site readiness inspection when all site preparation work is completed

2.2 Metropolitan Transportation COmmission (MTC)

MTC or its designated representative(s) is responsible for acceptance of the Clipper® network, which includes:

- Preparing this document and the specific documents that show site preparation tasks for each Transit Operator.
- Identifying the infrastructure required to be procured and installed.
- Conducting and documenting pre-installation site inspection.
- Working with the Transit Operator so that the schedule and work is performed to specification.

This document contains proprietary and confidential information originated or owned by Cubic. Neither this document nor the information disclosed herein shall be reproduced or transferred to other documents or used or disclosed to others for manufacturing or any other purposes except as specifically authorized in writing by Cubic.

3. SITE PREPARATION

3.1 SERVER

3.1.1 Rack Space

At each bus facility, the Successful Bidder will provide 6 Rack Unit (RU) spaces, in a 19-inch rack frame for the Clipper® equipment. This space shall be in an enclosure or area that provides a temperature controlled environment between 50° to 95°F. The dust particle count must be within acceptable standards for a business office. The rack space is required for:

- One RU space for the Clipper® Data Server (CDS)
- One RU space for a switch
- Two RU space for a UPS
- Five RU space for PoE panel will be installed on back side of rack behind router/switch and due to its length, above or below the CDS (requiring 6 RU in total)

NOTE

In the event that a two post type open rack is used, the Operator will need to supply 11 RU spaces. The PoE panel will be installed above or below the other components on this type of rack.

3.1.2 Power

Each Successful Bidder will provide one dedicated circuit breaker, 120 V-ac 20A for the rack mounted components at each location. The Operator will run power from this sub panel to the rack units, terminated at one 120 v-ac quad receptacle power terminal, Leviton 1254 with a 4x4 gang box or equivalent, mounted inside each of the rack frame or to the frame of a two post rack.

3.1.3 Network

The Livermore Transit Agency shall provide network connection between the Minimum Point of Entry (MPOE) and rack, terminated in the rack with a male RJ45 with a minimum 6 feet of slack remaining.

3.2 Wireless Access Points

3.2.1 Network

The Successful Bidder shall provide a network connection between the rack and the wireless access point installation location(s).

The rack end of the cable is to be terminated with a shielded RJ45 plug PN 111S08080028L34 (see Appendix A.4) in the rack with a minimum of 6 feet slack remaining.

The end at the access point shall be terminated with a M12 Connector PN 1543236 (see Appendix A.4) with a connector cap - PN 1430873.

The cable between the two should be Belden 7939A. This cable is suited for harsh environments and outdoor installation. Datasheet is in Appendix A.6.

This document contains proprietary and confidential information originated or owned by Cubic. Neither this document nor the information disclosed herein shall be reproduced or transferred to other documents or used or disclosed to others for manufacturing or any other purposes except as specifically authorized in writing by Cubic.

3.2.2 Grounding

Each wireless access point will need a 10ga neutral ground wire run from a suitable grounding point to the installation location, terminated with a #8 stud terminal ring.

3.2.3 Physical Mounting

Clearance around the access point is a minimum of 12in vertically both top and bottom, and 6in from each side of the case. The access point is 8.82” W x 6.64” H x 2.62” D. This creates a window of approx. 30” H x 18” W.

Pole mount(s) shall be the preferred mounting. The pole should be a standard 2-3/8” antenna mast pole, galvanized or stainless steel. Where the device is mounted inside a fuel island only a piece of Unistrut is used.

3.3 Antennas

There are two antenna types that will be used. There is an omni-directional type or a flat panel directional type. Which type used depends on the location and shape of the yard to be covered. As these are 802.11n access points there will be two antennas per access point to utilize MIMO (multiple-input multiple-output). The antennas installed on the coaches also use MIMO.

Each omni-directional antenna weigh 0.63 lbs. (286g) and will be mounted 2’ to 3’ apart on a single cross member mounted to the pole used to mount the a pole.

Each flat panel directional type weighs 2.27 lbs. (1030g) and will be mounted 2’ to 3’ apart using a cross member mounted to a pole.

3.3.1 Physical Mounting

Both the omni-directional and flat panel antennas are to be mounted next to the Wireless Data Transmission System (WDTS) on Unistrut cross members attached to the poles. Figure 3-1 shows a typical directional antenna installation. This image also shows the pole mounted wireless access point. The example shows a different flat panel antenna, the ones Cubic will install will only need one cross member.

This document contains proprietary and confidential information originated or owned by Cubic. Neither this document nor the information disclosed herein shall be reproduced or transferred to other documents or used or disclosed to others for manufacturing or any other purposes except as specifically authorized in writing by Cubic.

Figure 3-1: Typical Flat Panel (left) and Omni Antenna (right) Installations

3.3.2 Power

Power will be needed on a light pole at 5' above ground. The box can be drilled upon installation to accept the wires/conduit through the back, bottom, or side of the box.

The power wires should be wrapped/sealed and left protruding from a sealed connection through the wall of the pole or coming out of conduit that will be attached to the box. If the conduit is used, seal the end of the conduit and wires inside a heavy duty plastic bag. Power will be terminated in the box by installation crew.

WARNING

This power needs to be run to a separate breaker that is locked in the open position and tagged out "DO NOT TURN ON" until the PoE box is installed.

3.3.3 Grounding

The PoE box will need a 10ga neutral ground run to the box location. The termination to a common earth point inside the box will be completed during the PoE box installation.

This document contains proprietary and confidential information originated or owned by Cubic. Neither this document nor the information disclosed herein shall be reproduced or transferred to other documents or used or disclosed to others for manufacturing or any other purposes except as specifically authorized in writing by Cubic.

3.4 TOT

3.4.1 Power

120VAC power will be needed within 3 feet of the TOT. Power will be terminated in a single or double gang box.

3.4.2 Network

Network from the CDS (Server) to the TOT will be needed. The network line is to be terminated with a RJ45 plug and 6 feet of slack, or at a wall plate jack within 3 feet of the TOT.

3.4.3 Telephone

The TOT requires an analog telephone line in order to handle any credit/debit transactions. Phone line is to be terminated in a box or wall plate within 3 feet of the TOT.

3.4.4 Physical Mounting

The TOT sits on a stand and has a keyboard, mouse, card reader, and printer. The system needs an area 2ft. x 2ft.

3.5 Completion

Once the Successful Bidder confirms that the site preparation work is complete, Bidder will notify MTC or its designated representative(s) that the site is ready for a site inspection. If MTC or its designated representative(s) determines that the site preparation is not complete, or has been done incorrectly, Bidder will correct the site preparation.

This document contains proprietary and confidential information originated or owned by Cubic. Neither this document nor the information disclosed herein shall be reproduced or transferred to other documents or used or disclosed to others for manufacturing or any other purposes except as specifically authorized in writing by Cubic.

4. OPERATOR FACILITIES

4.1 Wheels – Rutan Ct.

4.1.1 Server Space

The server, UPS, switch, and PoE components will be installed in a rack in the existing server room. The Successful Bidder will utilize the existing rack and the existing internet connection.

4.1.2 Bus Communication Wireless

The site 2.4 GHz spectrum was crowded while the 5.0 GHz performed well considering the high walls and coaches parked so close together. Another access point in the fuel island will augment the coverage.

Figure 4-1: Wheels – Rutan Wireless Access Point and Antenna Locations #1

This document contains proprietary and confidential information originated or owned by Cubic. Neither this document nor the information disclosed herein shall be reproduced or transferred to other documents or used or disclosed to others for manufacturing or any other purposes except as specifically authorized in writing by Cubic.

Figure 4-2: Wheels – Rutan Wireless Access Point and Antenna Location #2

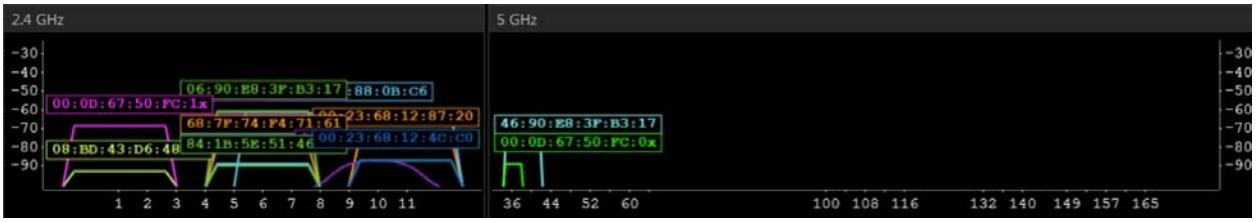

Figure 4-3: Wheels – Rutan 2.4 GHz and 5 GHz Radios

This document contains proprietary and confidential information originated or owned by Cubic. Neither this document nor the information disclosed herein shall be reproduced or transferred to other documents or used or disclosed to others for manufacturing or any other purposes except as specifically authorized in writing by Cubic.

Figure 4-4: Wheels – Rutan Ct. Signal Strength

Table 4-1. Wheels – Rutan Ct. Operator Site Preparation Tasks

Task	Location	Description
Provide 5 RU or 10 RU in rack	Server Room	• Rack to be 30” deep • 5 RU to house the server, ups, and PoE rack if it can be installed from both sides in a full frame or 4 post rack • If only one side is accessible or available as in a 2 post rack, 10 RU will be required
Provide Power to Rack	Inside cabinet or on frame	• 2 Gang 4 outlet inside of rack cabinet or attached to rack frame • Fed by dedicated 20A circuit

This document contains proprietary and confidential information originated or owned by Cubic. Neither this document nor the information disclosed herein shall be reproduced or transferred to other documents or used or disclosed to others for manufacturing or any other purposes except as specifically authorized in writing by Cubic.

Provide Network to Rack	Between MPOE and Rack	• Provide network connection between MPOE switch location • Terminate with a RJ45 plug with at least 6ft. of slack
Provide Network to Wireless Access Point at Location #1 and #2	From rack to mounting locations	• Provide network connection between switch and both access points • Cable to be Belden 7929A. Run between locations per codes and best practices • Terminate at rack end with RJ45 plugs - Sentinel Connector Systems Inc. P/N 111S08080028L34 – MFG data sheet is in APPENDIX A with at least 6ft. of slack • Terminate at both access point locations with M12 connector - Phoenix Contact P/N 1543236 with 2 ft. of slack • Install connector cap on M12 connectors
Provide Wireless Access Point Mount at Location #1	Above roof line as shown in Figure 4-1	• Provide pipe to mount WDTS and two antennas • Pipe to be 2-3/8" OD • Pipe to be mounted vertically on top of roof with braces • Pipe to protrude at least 4 feet 6 inches above the roof line
Provide antenna mounting frames at Location #1	On pipe above	• Provide and mount a Unistrut P1000T cross member 3 feet long 6" from top of the pipe above • Mount center of Unistrut to pipe so both arms are of equal length
Provide Wireless Access Point Mounting Frame at Location #2	At location shown in Figure 4-2	• Provide a 3ft. section of Unistrut P1000T mounted horizontally along the bottom of the metal roof joist • Mount Unistrut so it stands off approx. 1in from joist
Provide Power for TOT	Within 2 ft. of TOT location	• An outlet for a power strip for the TOT as there are 2 power supplies and the computer itself to plug in
Provide Network to TOT	From rack to TOT	• Provide network connection between switch and TOT • Terminate at rack end with RJ45 plug with at least 6ft. of slack • Terminate at TOT location with RJ45 plug with at least 6ft. of slack
Provide Analog Phone Line for TOT	Within 6ft. of TOT location	• Analog phone line is required for the credit/debit functionality of the TOT • Terminate in a wall plate or box with RJ11 jack

This document contains proprietary and confidential information originated or owned by Cubic. Neither this document nor the information disclosed herein shall be reproduced or transferred to other documents or used or disclosed to others for manufacturing or any other purposes except as specifically authorized in writing by Cubic.

4.2 Wheels – Transit Center

4.2.1 Switch

A switch will be installed to support the TOT.

4.2.2 Ticket Office Terminal

The TOT will be installed in a location yet to be determined.

The TOT will require a 2' x 2' area to install the computer and peripherals.

An analog phone line must be provided for the TOT.

A solution for networking between the server and TOT is to be provided by the Successful Bidder.

Table 4-2. Wheels – Transit Center Operator Site Preparation Tasks

Task	Location	Description
Provide Power for TOT	Within 2 ft. of TOT location	• An outlet for a power strip for the TOT as there are 2 power supplies and the computer itself to plug in
Provide Network to TOT	From Switch to TOT if not in close proximity	• Provide network connection between switch and TOT • Terminate at Switch end with RJ45 plug with at least 6ft. of slack • Terminate at TOT location with RJ45 plug with at least 6ft. of slack
Provide Analog Phone Line for TOT	Within 6ft. of TOT location	• Analog phone line is required for the credit/debit functionality of the TOT • Terminate in a wall plate or box with RJ11 jack
Provide Power for Switch	Within 2 ft. of Switch Location	• 120VAC 15A Circuit can be shared with TOT. • Single Gang 2 outlet

This document contains proprietary and confidential information originated or owned by Cubic. Neither this document nor the information disclosed herein shall be reproduced or transferred to other documents or used or disclosed to others for manufacturing or any other purposes except as specifically authorized in writing by Cubic.

APPENDIX A MANUFACTURER DATA SHEETS

A.1 MOXA

Moxa 4131 Wireless Access Point

Moxa 6232 Wireless Access Point

Moxa PoE Power Supply

Moxa PoE Injector

Moxa Omni Antenna.pdf

Moxa Flat Panel Antenna.pdf

Moxa Pole Mount

A.2 DINSPACE

DIN Rack Adapter

A.3 DEHN

Ethernet DIN Rack Surge Suppressor

A.4 PHOENIX CONTACT

WDTS M12 Ethernet Connector

M12 Connector Cap

A.5 SENTINEL CONNECTOR

WDTS RJ45 Connector in Rack

A.6 BELDEN

Belden 7929A Outdoor Ethernet Cal

This document contains proprietary and confidential information originated or owned by Cubic. Neither this document nor the information disclosed herein shall be reproduced or transferred to other documents or used or disclosed to others for manufacturing or any other purposes except as specifically authorized in writing by Cubic.

Appendix A-5

Scope of Work and Specifications

Livermore-Amador Valley Transit Authority Site Preparation – Atlantis Site

875 Atlantis Ct., Livermore, CA 94551

See Appendix A-6 for Manufacturer Data Sheets

Livermore (Atlantis) Site Preparation

DR 64 / CDRL 60

Document Number: 9614-37028

Revision: A.00

Date: 24 Nov 2014

CUBIC™

Intelligent travel made real™

CONTENTS

1. INTRODUCTION 1
1.1 PURPOSE 3

2. RESPONSIBILITIES 4
2.1 EAST BAY OPERATOR GROUP 4
2.2 METROPOLITAN TRANSPORTATION COMMISSION (MTC) 4

3. SITE PREPARATION 5
3.1 SERVER 5
3.1.1 Rack Space 5
3.1.2 Power 5
3.1.3 Network 5
3.2 WIRELESS ACCESS POINTS 5
3.2.1 Network 5
3.2.2 Grounding 6
3.2.3 Physical Mounting 6
3.3 ANTENNAS 6
3.3.1 Physical Mounting 6
3.3.2 Power 7
3.3.3 Grounding 7
3.4 TOT 8
3.4.1 Power 8
3.4.2 Network 8
3.4.3 Telephone 8
3.4.4 Physical Mounting 8
3.5 COMPLETION 8

4. OPERATOR FACILITIES 9
4.1 WHEELS – ATLANTIS CT 9
4.1.1 Server Space 9
4.1.2 Bus Communication Wireless 9

Appendix

APPENDIX A **Manufacturer Data Sheets 13**
A.1 MOXA 13
A.2 DINSPACE 13
A.3 DEHN 13
A.4 PHOENIX CONTACT 13
A.5 SENTINEL CONNECTOR 13
A.6 BELDEN 13

This document contains proprietary and confidential information originated or owned by Cubic. Neither this document nor the information disclosed herein shall be reproduced or transferred to other documents or used or disclosed to others for manufacturing or any other purposes except as specifically authorized in writing by Cubic.

Figures

Figure 1-1: East Bay Operator Group System Diagram 2
Figure 3-1: Typical Flat Panel (left) and Omni Antenna (right) Installations 7
Figure 4-4: Wheels Atlantis Wireless Access Point and Antenna Locations #1 and #2 9
Figure 4-5: Wheels Atlantis Wireless Access Point and Antenna Location #3 10
Figure 4-6: Wheels - Atlantis 2.4 GHz and 5 GHz Radios 10
Figure 4-7: Wheels – Atlantis Ct. Signal Strength 11

Tables

Table 4-2. Wheels – Atlantis Ct. Operator Site Preparation Tasks 11

This document contains proprietary and confidential information originated or owned by Cubic. Neither this document nor the information disclosed herein shall be reproduced or transferred to other documents or used or disclosed to others for manufacturing or any other purposes except as specifically authorized in writing by Cubic.

Acronyms and Abbreviations

Cat6	Category 6 Network Cable
CDS	Clipper® Data Server
County Connection	Transit Operator: Central Contra County Transportation Authority
Cubic	Cubic Transportation Systems, Inc.
DIB	Design Information Bulletin
HCR	Handheld Card Reader
MIMO	Multiple-Input Multiple-Output
MPOE	Minimum Point Of Entry (where phone/internet provider will cable to)
MTC	Metropolitan Transportation Commission
OD	Outside Diameter
Operator	Transit Operator
PoE	Power-over-Ethernet
RU	Rack Unit (space in server rack approx.. 2” high)
TOT	Ticket Office Terminal (usually pronounced “tote”)
Tri Delta	Transit Operator: Eastern Contra Costa Transit Authority
UPS	uninterruptible power supply
WAN	Wide Area Network
WDTS	Wireless Data Transmission System (Clipper® Access Point)
WestCAT	Transit operator: Western Contra Costa Transportation Authority
Wheels	Transit Operator: Livermore Amador Valley Transit Authority

This document contains proprietary and confidential information originated or owned by Cubic. Neither this document nor the information disclosed herein shall be reproduced or transferred to other documents or used or disclosed to others for manufacturing or any other purposes except as specifically authorized in writing by Cubic.

1. INTRODUCTION

This design information bulletin (DIB) provides specification of the installation of the Clipper® system components and infrastructure at the transit operators in the East Bay operator group.

At each facility covered by this document Site Preparation requires the Transit Operator provide space and infrastructure for the installation of various components.

The Server/Switch/ uninterruptible power supply (UPS)/Power-over-Ethernet (PoE) components all require rack space in a secure, environmentally controlled space. If a rack does not exist, a new one must be installed. The Ticket Office Terminal (TOT) requires area in a customer service location.

The Successful Bidder will report directly to the Metropolitan Transportation Commission (MTC) Project Manager or his/her designated representative with questions, guidance, approvals, and acceptance of the completed job. There will be no direct communication with the individual Transit Operators, or Cubic Transportation Systems, Inc. (Cubic). The work will be scheduled in advance, through the MTC Project Manager or his/her designated representative, and will occur in such a manner as to not affect the business conducted by the individual Transit agencies.

This document is written by Cubic. Cubic has no relationship and is not affiliated in any way with any MTC designated representatives and takes no responsibility or liability for any statements, verbal or written, made by any MTC designated representatives or any of their employees. Any approvals or direction that are given by the MTC Project Manager's designated representative are not endorsed or accepted by Cubic, and Cubic reserves the right to accept or reject any work done or equipment supplied by Bidder regardless of any statements made by MTC designated representatives.

Figure 1-1 provides an overall system diagram which is described in detail throughout Section 3. Detailed equipment lists of the equipment Cubic shall provide are in APPENDIX A. The specifications for what equipment the operator must provide can be extrapolated from the tables in Section 4.

This document contains proprietary and confidential information originated or owned by Cubic. Neither this document nor the information disclosed herein shall be reproduced or transferred to other documents or used or disclosed to others for manufacturing or any other purposes except as specifically authorized in writing by Cubic.

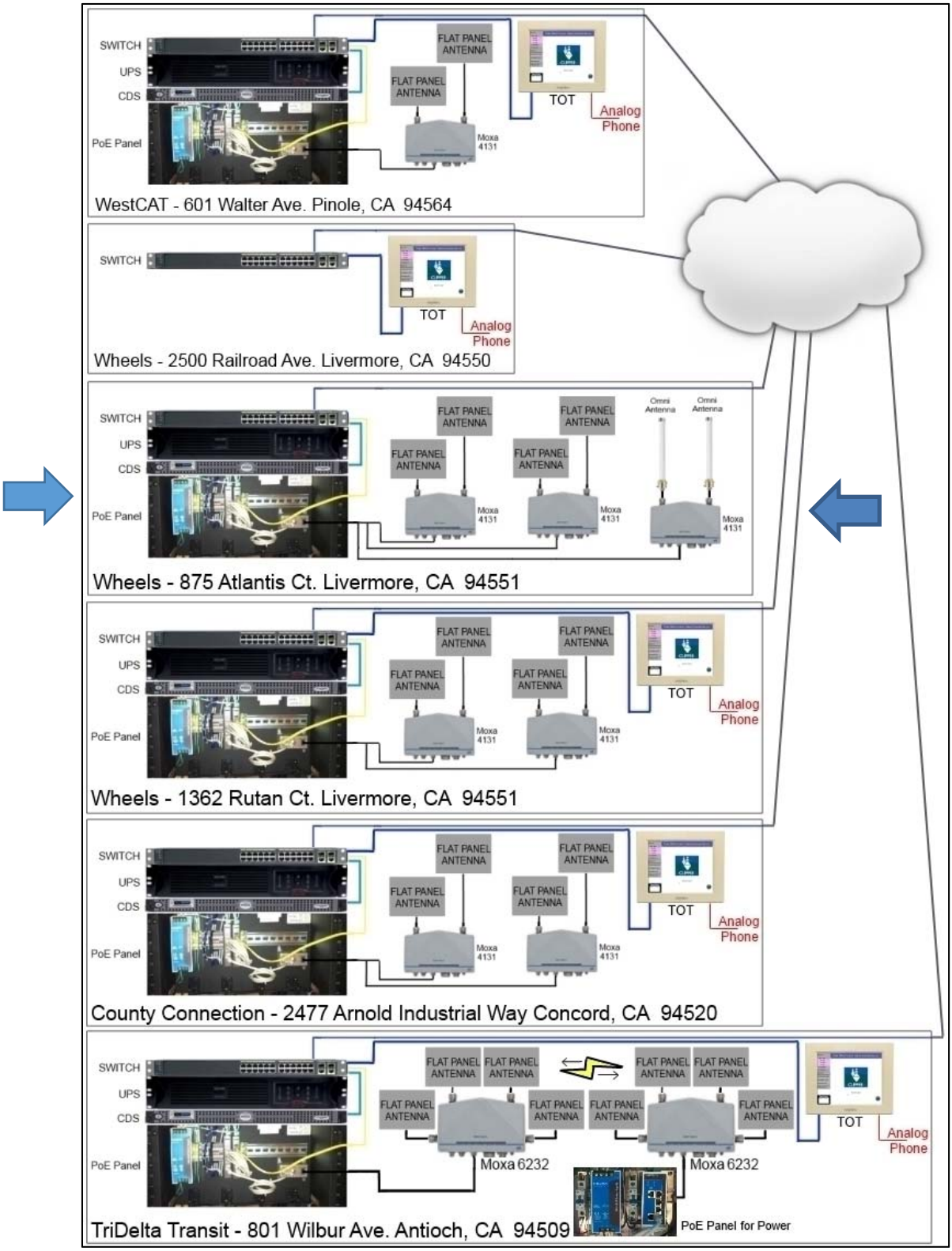

Figure 1-1: East Bay Operator Group System Diagram

This document contains proprietary and confidential information originated or owned by Cubic. Neither this document nor the information disclosed herein shall be reproduced or transferred to other documents or used or disclosed to others for manufacturing or any other purposes except as specifically authorized in writing by Cubic.

1.1 Purpose

This document provides the necessary site preparation information for the phase III rollout of the East Bay operator (Wheels) bus and customer service sites. This document identifies the responsibilities of the Successful Bidder. Responsibilities are outlined in Section 2 of this document.

This document contains information outlining the site preparation requirements for the following facilities:

- Wheels
    - Bus Yard – 875 Atlantis Ct. Livermore, CA 94551

This document contains proprietary and confidential information originated or owned by Cubic. Neither this document nor the information disclosed herein shall be reproduced or transferred to other documents or used or disclosed to others for manufacturing or any other purposes except as specifically authorized in writing by Cubic.

2. RESPONSIBILITIES

2.1 East Bay Operator Group

The Successful Bidder are responsible for the preparation of their facilities that will be utilized as part of the Clipper® system. All work should be performed by qualified personnel in accordance with local, state, and federal regulations and codes (e.g., National Electrical Code Article 800 for communication circuits), and industry standard practices. Operator responsibilities include:

- Procuring and installing the following equipment, as necessary, to support installation of fixed Clipper® equipment (servers, access points, switches, antennas, TOTs)
    - Power supplies
    - Circuit breakers
    - Communications cabling, Cat6 and twisted pair
    - Wide Area Network (WAN) Routers
    - Conduit
    - Enclosures or shelving units adequate to hold the equipment for each Operator as listed below.
    - Cisco Extend Air R5005 Bridge to antenna locations (as necessary)
    - Other equipment as necessary
- Requesting site readiness inspection when all site preparation work is completed

2.2 Metropolitan Transportation Commission (MTC)

MTC or its designated representative(s) is responsible for acceptance of the Clipper® network, which includes:

- Preparing this document and the specific documents that show site preparation tasks for each Transit Operator.
- Identifying the infrastructure required to be procured and installed.
- Conducting and documenting pre-installation site inspection.
- Working with the Transit Operator so that the schedule and work is performed to specification.

This document contains proprietary and confidential information originated or owned by Cubic. Neither this document nor the information disclosed herein shall be reproduced or transferred to other documents or used or disclosed to others for manufacturing or any other purposes except as specifically authorized in writing by Cubic.

3. SITE PREPARATION

3.1 SERVER

3.1.1 Rack Space

At the bus facility, the Livermore Transit Agency will provide a Rack Unit with adequate (RU) spaces, and a 19-inch rack frame for the Clipper® equipment. This space shall be in an enclosure or area that provides a temperature controlled environment between 50° to 95°F. The dust particle count must be within acceptable standards for a business office. The rack space is required for:

- One RU space for the Clipper® Data Server (CDS)
- One RU space for a switch
- Two RU space for a UPS
- Five RU space for PoE panel will be installed on back side of rack behind router/switch and due to its length, above or below the CDS (requiring 6 RU in total)

NOTE

In the event that a two post type open rack is used, the Operator will need to supply 11 RU spaces. The PoE panel will be installed above or below the other components on this type of rack.

3.1.2 Power

Each Successful Bidder will provide one dedicated circuit breaker, 120 V-ac 20A for the rack mounted components at each location. The Operator will run power from this sub panel to the rack units, terminated at one 120 v-ac quad receptacle power terminal, Leviton 1254 with a 4x4 gang box or equivalent, mounted inside each of the rack frame or to the frame of a two post rack.

3.1.3 Network

The Livermore Transit Agency shall provide network connection between the Minimum Point of Entry (MPOE) and rack, terminated in the rack with a male RJ45 with a minimum 6 feet of slack remaining.

3.2 Wireless Access Points

3.2.1 Network

The Successful Bidder shall provide a network connection between the rack and the wireless access point installation location(s).

The rack end of the cable is to be terminated with a shielded RJ45 plug PN 111S08080028L34 (see Appendix A.4) in the rack with a minimum of 6 feet slack remaining.

The end at the access point shall be terminated with a M12 Connector PN 1543236 (see Appendix A.4) with a connector cap - PN 1430873.

The cable between the two should be Belden 7939A. This cable is suited for harsh environments and outdoor installation. Datasheet is in Appendix A.6.

This document contains proprietary and confidential information originated or owned by Cubic. Neither this document nor the information disclosed herein shall be reproduced or transferred to other documents or used or disclosed to others for manufacturing or any other purposes except as specifically authorized in writing by Cubic.

3.2.2 Grounding

Each wireless access point will need a 10ga neutral ground wire run from a suitable grounding point to the installation location, terminated with a #8 stud terminal ring.

3.2.3 Physical Mounting

Clearance around the access point is a minimum of 12in vertically both top and bottom, and 6in from each side of the case. The access point is 8.82” W x 6.64” H x 2.62” D. This creates a window of approx. 30” H x 18” W.

Pole mount(s) shall be the preferred mounting. The pole should be a standard 2-3/8” antenna mast pole, galvanized or stainless steel. Where the device is mounted inside a fuel island only a piece of Unistrut is used.

3.3 Antennas

There are two antenna types that will be used. There is an omni-directional type or a flat panel directional type. Which type used depends on the location and shape of the yard to be covered. As these are 802.11n access points there will be two antennas per access point to utilize MIMO (multiple-input multiple-output). The antennas installed on the coaches also use MIMO.

Each omni-directional antenna weigh 0.63 lbs. (286g) and will be mounted 2’ to 3’ apart on a single cross member mounted to the pole used to mount the a pole.

Each flat panel directional type weighs 2.27 lbs. (1030g) and will be mounted 2’ to 3’ apart using a cross member mounted to a pole.

3.3.1 Physical Mounting

Both the omni-directional and flat panel antennas are to be mounted next to the Wireless Data Transmission System (WDTS) on Unistrut cross members attached to the poles. Figure 3-1 shows a typical directional antenna installation. This image also shows the pole mounted wireless access point. The example shows a different flat panel antenna, the ones Cubic will install will only need one cross member.

This document contains proprietary and confidential information originated or owned by Cubic. Neither this document nor the information disclosed herein shall be reproduced or transferred to other documents or used or disclosed to others for manufacturing or any other purposes except as specifically authorized in writing by Cubic.

Figure 3-1: Typical Flat Panel (left) and Omni Antenna (right) Installations

3.3.2 Power

Power will be needed on a light pole at 5' above ground. The box can be drilled upon installation to accept the wires/conduit through the back, bottom, or side of the box.

The power wires should be wrapped/sealed and left protruding from a sealed connection through the wall of the pole or coming out of conduit that will be attached to the box. If the conduit is used, seal the end of the conduit and wires inside a heavy duty plastic bag. Power will be terminated in the box by installation crew.

WARNING

This power needs to be run to a separate breaker that is locked in the open position and tagged out "DO NOT TURN ON" until the PoE box is installed.

3.3.3 Grounding

The PoE box will need a 10ga neutral ground run to the box location. The termination to a common earth point inside the box will be completed during the PoE box installation.

This document contains proprietary and confidential information originated or owned by Cubic. Neither this document nor the information disclosed herein shall be reproduced or transferred to other documents or used or disclosed to others for manufacturing or any other purposes except as specifically authorized in writing by Cubic.

3.4 TOT

3.4.1 Power

120VAC power will be needed within 3 feet of the TOT. Power will be terminated in a single or double gang box.

3.4.2 Network

Network from the CDS (Server) to the TOT will be needed. The network line is to be terminated with a RJ45 plug and 6 feet of slack, or at a wall plate jack within 3 feet of the TOT.

3.4.3 Telephone

The TOT requires an analog telephone line in order to handle any credit/debit transactions. Phone line is to be terminated in a box or wall plate within 3 feet of the TOT.

3.4.4 Physical Mounting

The TOT sits on a stand and has a keyboard, mouse, card reader, and printer. The system needs an area 2ft. x 2ft.

3.5 Completion

Once the Successful Bidder confirms that the site preparation work is complete, Bidder will notify MTC or its designated representative(s) that the site is ready for a site inspection. If MTC or its designated representative(s) determines that the site preparation is not complete, or has been done incorrectly, Bidder will correct the site preparation.

This document contains proprietary and confidential information originated or owned by Cubic. Neither this document nor the information disclosed herein shall be reproduced or transferred to other documents or used or disclosed to others for manufacturing or any other purposes except as specifically authorized in writing by Cubic.

4. OPERATOR FACILITIES

4.1 Wheels – Atlantis Ct.

4.1.1 Server Space

The server, UPS, switch, and PoE components will be installed in a rack in the bus garage. The Rack will be provided by the Successful Bidder. The existing internet connection will be used for the Clipper project.

4.1.2 Bus Communication Wireless

This site showed very few access points so it was tested at 2.4 GHz. Because of the larger site two access points to cover the yard and an additional access point for the fuel station are to be installed. Locations #1 and #2 will cover the yard; location #3 will cover inside the fuel island.

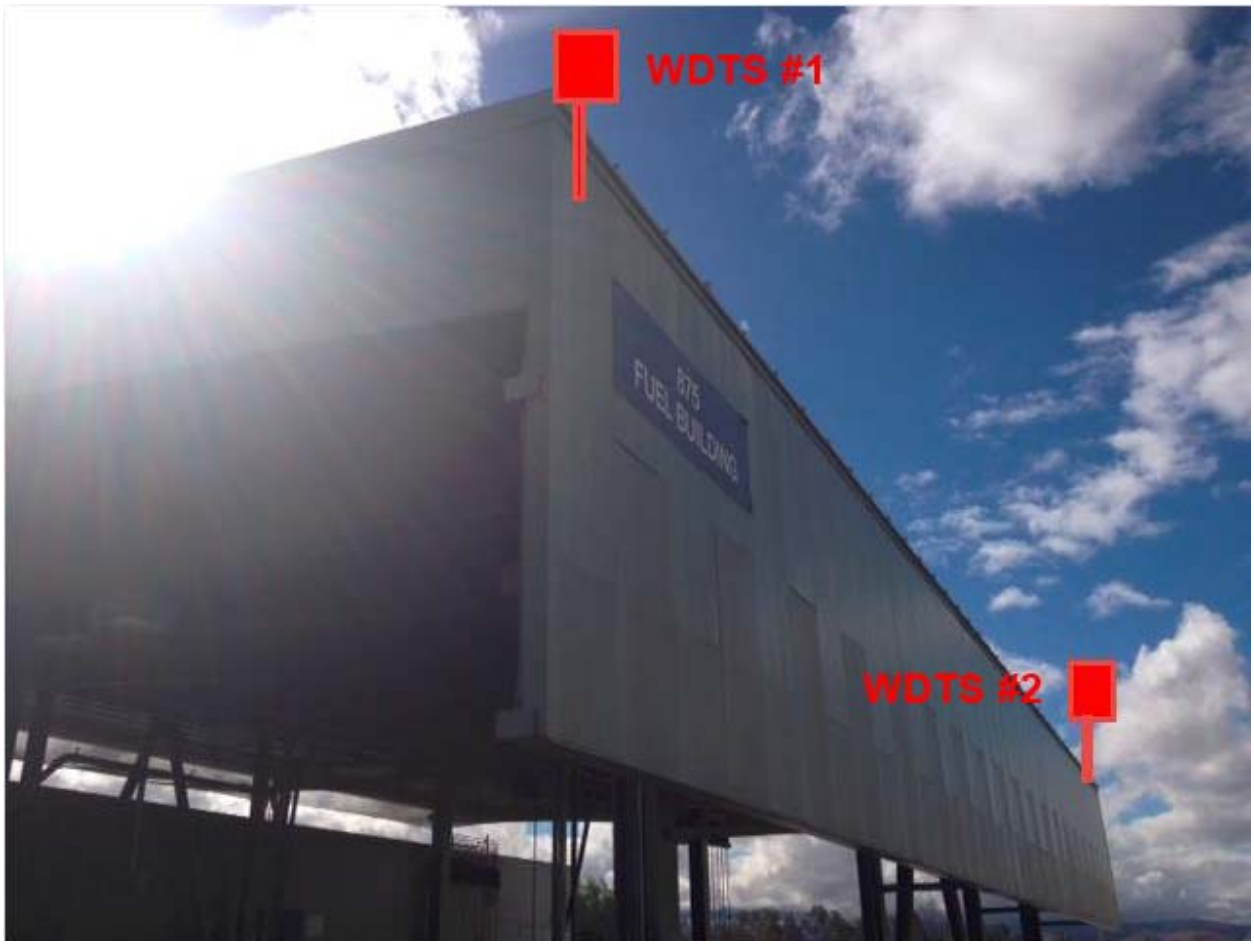

Figure 4-1: Wheels Atlantis Wireless Access Point and Antenna Locations #1 and #2

This document contains proprietary and confidential information originated or owned by Cubic. Neither this document nor the information disclosed herein shall be reproduced or transferred to other documents or used or disclosed to others for manufacturing or any other purposes except as specifically authorized in writing by Cubic.

Figure 4-2: Wheels Atlantis Wireless Access Point and Antenna Location #3

Figure 4-3: Wheels - Atlantis 2.4 GHz and 5 GHz Radios

This document contains proprietary and confidential information originated or owned by Cubic. Neither this document nor the information disclosed herein shall be reproduced or transferred to other documents or used or disclosed to others for manufacturing or any other purposes except as specifically authorized in writing by Cubic.

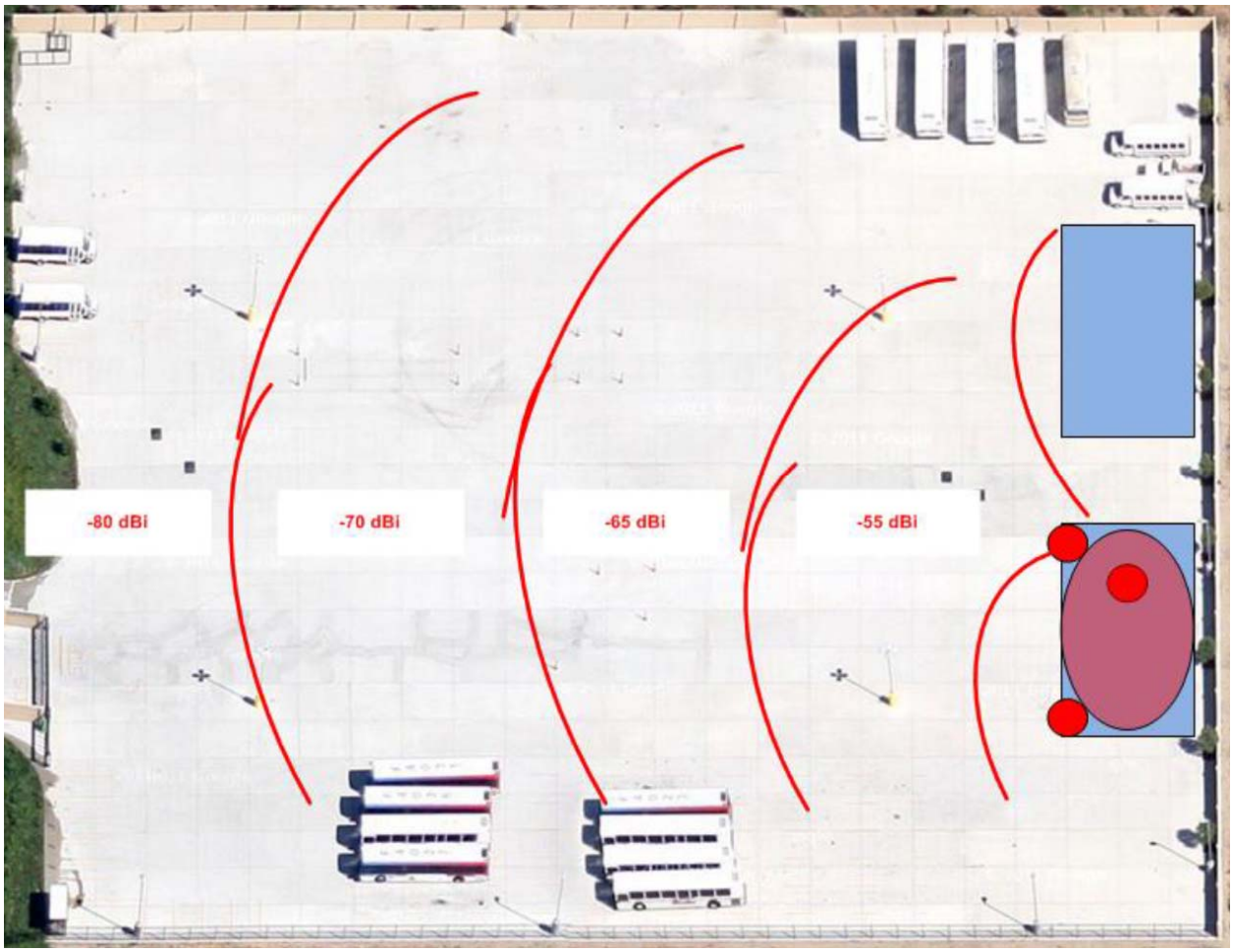

Figure 4-4: Wheels – Atlantis Ct. Signal Strength

Table 4-1. Wheels – Atlantis Ct. Operator Site Preparation Tasks

Task	Location	Description
Provide 5 RU or 10 RU in rack	Electrical Room	• Rack to be 30" deep • 5 RU to house the server, ups, and PoE rack if it can be installed from both sides in a full frame or 4 post rack • If only one side is accessible or available as in a 2 post rack, 10 RU will be required
Provide Power to Rack	Inside cabinet or on frame	• 2 Gang 4 outlet inside of rack cabinet or attached to rack frame • Fed by dedicated 20A circuit
Provide Network to Rack	Between MPOE and Rack	• Provide network connection between MPOE switch location • Terminate with a RJ45 plug with at least 6ft. of slack
Provide Network to Wireless Access Point at Location #1, #2, and #3	From rack to mounting locations	• Provide network connection between switch and both access points • Cable to be Belden 7929A. Run between locations per codes and best practices

This document contains proprietary and confidential information originated or owned by Cubic. Neither this document nor the information disclosed herein shall be reproduced or transferred to other documents or used or disclosed to others for manufacturing or any other purposes except as specifically authorized in writing by Cubic.

		• Terminate at rack end with RJ45 plugs - Sentinel Connector Systems Inc. P/N 111S08080028L34 – MFG data sheet is in APPENDIX A with at least 6ft. of slack • Terminate at both access point locations with M12 connector - Phoenix Contact P/N 1543236 with 2 ft. of slack • Install connector cap on M12 connectors
Provide Wireless Access Point Mount at Locations #1 and #2	On each end of West side of fuel island	• Provide pipe to mount WDTS and two antennas • Pipe to be 2-3/8" OD • Pipe to be mounted vertically via a standoff on each end of wall or on top of roof with braces. • Pipe to protrude at least 18" above the roof line.
Provide antenna mounting frames at Locations #1 and #2	On pipes above	• Provide and mount a Unistrut P1000T cross member 3 feet long 6" from top of each pipe above • Mount center of Unistrut to pipe so both arms are of equal length
Provide Wireless Access Point Mounting Frame at Location #3	At location shown in Figure 4-2	• Provide a 3ft. section of Unistrut P1000T mounted horizontally along the bottom of the metal roof joist. • Mount Unistrut so it stands off approx. 1in from joist.

This document contains proprietary and confidential information originated or owned by Cubic. Neither this document nor the information disclosed herein shall be reproduced or transferred to other documents or used or disclosed to others for manufacturing or any other purposes except as specifically authorized in writing by Cubic.

APPENDIX A MANUFACTURER DATA SHEETS

A.1 MOXA

Moxa 4131 Wireless Access Point

Moxa 6232 Wireless Access Point

Moxa PoE Power Supply

Moxa PoE Injector

Moxa Omni Antenna.pdf

Moxa Flat Panel Antenna.pdf

Moxa Pole Mount

A.2 DINSPACE

DIN Rack Adapter

A.3 DEHN

Ethernet DIN Rack Surge Suppressor

A.4 PHOENIX CONTACT

WDTS M12 Ethernet Connector

M12 Connector Cap

A.5 SENTINEL CONNECTOR

WDTS RJ45 Connector in Rack

A.6 BELDEN

Belden 7929A Outdoor Ethernet Cal

This document contains proprietary and confidential information originated or owned by Cubic. Neither this document nor the information disclosed herein shall be reproduced or transferred to other documents or used or disclosed to others for manufacturing or any other purposes except as specifically authorized in writing by Cubic.

Appendix A-6

Manufacturer Data Sheets – All Projects

AWK-4131 Series

Industrial IEEE 802.11a/b/g/n IP68 wireless AP/bridge/client

- IEEE 802.11a/b/g/n compliant
- One M12/SFP Gigabit combo port
- Up to 300 Mbps data rate
- Supports 100 ms Turbo Roaming
- MIMO technology increases data throughput and range
- Rugged IP68-rated housing and -40 to 75°C operating temperature
- Shock Resisting M-12 Ethernet connector

Introduction

Moxa's new AWK-4131 is a 3-in-1 industrial wireless AP/bridge/client that meets the growing need for faster data transmission speeds and wider coverage by supporting IEEE 802.11n technology with a net data rate of up to 300 Mbps. The AWK-4131 combines two adjacent 20 MHz channels into a single 40 MHz channel to deliver a potent combination of greater reliability and more bandwidth. With a wide -40 to 75°C operating temperature and dust-tight/weatherproof IP68-rated design, the AWK-4131 allows you to extend existing wired networks to outdoor locations. The AWK-4131 can operate on either the 2.4 or 5 GHz bands and is backwards-compatible with existing 802.11a/b/g deployments to future-proof your wireless investments.

Higher Data Rate and Greater Bandwidth

- High-speed wireless connectivity with up to 150 Mbps data throughput
- MIMO technology to improve the capacity of multiple data stream transmits and receives
- Increased channel width with channel bonding technology

Industrial and Outdoor Features for Critical Environments

- Industrial-grade QoS and VLAN for efficient data traffic management
- IP68-rated metal housing and -40 to 75°C wide operating temperature
- PoE and dual DC power inputs
- Integrated DI/DO for on-site monitoring and warnings
- Long-distance wireless transmission over 10 km

Specifications

WLAN Interface

Standards:
IEEE 802.11a/b/g/n for Wireless LAN
IEEE 802.11i for Wireless Security
IEEE 802.3 for 10BaseT
IEEE 802.3u for 100BaseTX
IEEE 802.3ab for 1000BaseT
IEEE 802.3af for Power-over-Ethernet
IEEE 802.1D for Spanning Tree Protocol
IEEE 802.1w for Rapid STP
IEEE 802.1Q for VLAN

Spread Spectrum and Modulation (typical):
- DSSS with DBPSK, DQPSK, CCK
- OFDM with BPSK, QPSK, 16QAM, 64QAM
- 802.11b: CCK @ 11/5.5 Mbps, DQPSK @ 2 Mbps, DBPSK @ 11 Mbps
- 802.11a/g: 64QAM @ 54/48 Mbps, 16QAM @ 36/24 Mbps, QPSK @ 18/12 Mbps, BPSK @ 9/6 Mbps
- 802.11n: 64QAM @ 300 bps to BPSK @ 6.5 Mbps (multiple rates supported)

Operating Channels (central frequency):
US:
2.412 to 2.462 GHz (11 channels)
5.18 to 5.24 GHz (4 channels)
EU:
2.412 to 2.472 GHz (13 channels)
5.18 to 5.24 GHz (4 channels)
JP:
2.412 to 2.472 GHz (13 channels, OFDM)
2.412 to 2.484 GHz (14 channels, DSSS)
5.18 to 5.24 GHz (4 channels for W52)

Security:
- SSID broadcast enable/disable
- Firewall for MAC/IP/Protocol/Port-based filtering
- 64-bit and 128-bit WEP encryption, WPA/WPA2-Personal and Enterprise (IEEE 802.1X/RADIUS, TKIP and AES)

Transmission Rates:
802.11b: 1, 2, 5.5, 11 Mbps
802.11a/g: 6, 9, 12, 18, 24, 36, 48, 54 Mbps
802.11n: 6.5 to 300 Mbps (multiple rates supported)

TX Transmit Power:
802.11b:
1 to 11 Mbps: Typ. 18 dBm (± 1.5 dBm)
802.11g:
6 to 24 Mbps: Typ. 18 dBm (± 1.5 dBm)
36 to 48 Mbps: Typ. 17 dBm (± 1.5 dBm)
54 Mbps: Typ. 15 dBm (± 1.5 dBm)
802.11a:
6 to 24 Mbps: Typ. 17 dBm (± 1.5 dBm)
36 to 48 Mbps: Typ. 16 dBm (± 1.5 dBm)
54 Mbps: Typ. 14 dBm (± 1.5 dBm)

TX Transmit Power MIMO:
802.11a/n (20/40 MHz):
MCS15 20 MHz: Typ. 13 dBm (± 1.5 dBm)
MCS15 40 MHz: Typ. 12 dBm (± 1.5 dBm)

802.11g/n (20/40 MHz):
MCS15 20 MHz: Typ. 14 dBm (± 1.5 dBm)
MCS15 40 MHz: Typ. 13 dBm (± -1.5 dBm)
RX Sensitivity:
802.11b:
-92 dBm @ 1 Mbps, -90 dBm @ 2 Mbps, -88 dBm @ 5.5 Mbps, -84 dBm @ 11 Mbps
802.11g:
-87 dBm @ 6 Mbps, -86 dBm @ 9 Mbps, -85 dBm @ 12 Mbps, -82 dBm @ 18 Mbps, -80 dBm @ 24 Mbps, -76 dBm @ 36 Mbps, -72 dBm @ 48 Mbps, -70 dBm @ 54 Mbps
802.11a:
-87 dBm @ 6 Mbps, -86 dBm @ 9 Mbps, -85 dBm @ 12 Mbps, -82 dBm @ 18 Mbps,
-80 dBm @ 24 Mbps, -76 dBm @ 36 Mbps, -72 dBm @ 48 Mbps, -70 dBm @ 54 Mbps
RX Sensitivity MIMO:
802.11a/n:
-68 dBm @ MCS15 40 MHz, -70 dBm @ MCS7 40 MHz, -69 dBm @ MCS15 20 MHz, -71 dBm @ MCS7 20 MHz
802.11g/n:
-68 dBm @ MCS15 40 MHz, -70 dBm @ MCS7 40 MHz, -69 dBm @ MCS15 20 MHz,
-71 dBm @ MCS7 20 MHz

Protocol Support

General Protocols: Proxy ARP, DNS, HTTP, HTTPS, IP, ICMP, SNTP, TCP, UDP, RADIUS, SNMP, PPPoE, DHCP
AP-only Protocols: ARP, BOOTP, DHCP, dynamic VLAN-Tags for 802.1X-Clients, STP/RSTP (IEEE 802.1D/w)

Interface

Default Antennas: 2 dual-band omni-directional antennas, 5 dBi at 2.4 GHz, 2 dBi at 5 GHz, N-type (male)
Connector for External Antennas: N-type (female)
LAN Ports: 1, 10/100/1000BaseT(X), auto negotiation speed (M12 female type)
Fiber Ports: 1, 1000BaseSFP slot
Console Port: RS-232 (waterproof RJ45-type)
LED Indicators: PWR, FAULT, STATE, WLAN, LAN
Alarm Contact (digital output, M12 male connector): 1 relay output with current carrying capacity of 1 A @ 24 VDC
Digital Inputs (M12 connector): 2 electrically isolated inputs
- +13 to +30 V for state "1"
- +3 to -30 V for state "0"
- Max. input current: 8 mA

Physical Characteristics

Housing: Metal, IP68 protection
Weight: 1.8 kg
Dimensions: 224 x 147.7 x 64.5 mm (8.82 x 5.82 x 2.54 in)
Installation: Wall mounting (standard), DIN-Rail mounting (optional), pole mounting (optional)

Environmental Limits

Operating Temperature: -40 to 75°C (-40 to 167°F)
Storage Temperature: -40 to 85°C (-40 to 185°F)
Ambient Relative Humidity: 5% to 100% (non-condensing)

Power Requirements

Input Voltage: 12 to 48 VDC, redundant dual DC power inputs or 48 VDC Power-over-Ethernet (IEEE 802.3af compliant)
Connector: M12 connector with A-coding
Power Consumption: 12 to 48 VDC, 890mA (max.)
Reverse Polarity Protection: Present

Standards and Certifications

Safety: UL 60950-1, EN 60950-1
EMC: EN 301 489-1/17, FCC Part 15 Subpart B Class B, EN 55022/55024
Radio: EN 300 328, EN 301 893, DSPR (Japan)
Rail Traffic: EN 50155, EN 50121-1/4
Note: Please check Moxa's website for the most up-to-date certification status.

Warranty

Dimensions

Unit: mm (inch)

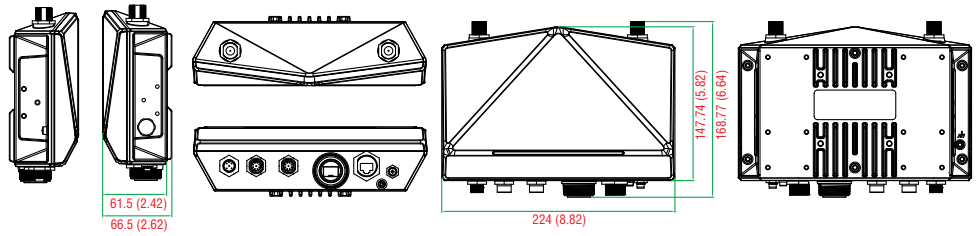

side view top & bottom view front & rear view

Ordering Information

Available Models

AWK-4131-M12-US-T: IEEE 802.11a/b/g/n IP68 wireless AP/bridge/client, M12 Connector, US band, -40 to 75°C operating temperature
AWK-4131-M12-EU-T: IEEE 802.11a/b/g/n IP68 wireless AP/bridge/client, M12 Connector, EU band, -40 to 75°C operating temperature
AWK-4131-M12-JP-T: IEEE 802.11a/b/g/n IP68 wireless AP/bridge/client, M12 Connector, JP band, -40 to 75°C operating temperature
Note: Please visit Moxa's website for a complete list of optional wireless accessories and antennas available for Moxa's wireless products.

Package Checklist

- AWK-4131-M12 wireless AP/bridge/client
- 2 dual-band omni-directional antennas (5/2 dBi, N-type male, 2.4/5 GHz)
- Wall mounting kit (includes 2 supports)
- Field-installable power plug
- Field-installable Ethernet plug
- Metal cap to cover M12 male DI/O connector
- Metal caps to cover RJ45 connectors
- Metal cap to cover SFP connector
- Documentation and software CD
- Quick installation guide (printed)
- Warranty card

© Moxa Inc. All Rights Reserved. Updated 08/08/11. Specifications subject to change without notice. Please visit our website for the most up-to-date product information.

AWK-6232 Series

Preliminary

Industrial IEEE 802.11a/b/g/n IP68 dual-RF wireless AP/bridge/client

- IEEE 802.11a/b/g/n compliant
- Dual-RF design: 2.4 GHz and/or 5 GHz RF bands
- M12 anti-vibration connectors
- Industrial grade QoS (WMM) and VLAN supported
- Compliant with essential sections of EN 50155
- Rugged IP68-rated housing and -40 to 75°C operating temperature

802.11 Dual RF Turbo Roaming EN 50155 EN 50121 c UL us LISTED CE FC

Introduction

Moxa's AWK-6232 3-in-1 outdoor wireless AP/bridge/client meets the growing need for faster data transmission speeds and wider coverage by supporting IEEE 802.11n technology with a net data rate of up to 300 Mbps. The AWK-6232 avoids interruptions in WLAN transmissions with its dual 2.4/5 GHz RF modules, which allow two independent wireless connections over different frequencies. The AWK-6232 is compliant with the essential sections of EN 50155, covering operating temperature, power input voltage, surge, ESD and vibration. In addition, the AWK-6232 is housed in an IP68 metal casing with M12 connectors for total protection against dust, water, vibration, and other environmental effects.

Improved Higher Data Rate and Bandwidth

- High-speed wireless connectivity with up to 300 Mbps data rate
- MIMO technology to improve the capacity of multiple data stream transmits and receives
- Increased channel width with channel bonding technology

Industrial and Outdoor Rated Features for Critical Environments

- IP68-rated metal housing and -40 to 75°C wide operating temperature
- Anti-vibration M12 design and waterproof/dust-tight RJ45 connectors
- Wall, DIN-Rail, and pole mounting options for versatile outdoor installation

Specifications

WLAN Interface

Standards:
IEEE 802.11a/b/g/n for Wireless LAN
IEEE 802.11i for Wireless Security
IEEE 802.3 for 10BaseT
IEEE 802.3u for 100BaseTX
IEEE 802.3ab for 1000BaseT
IEEE 802.3at for Power-over-Ethernet Plus
IEEE 802.1D for Spanning Tree Protocol
IEEE 802.1w for Rapid STP
IEEE 802.1Q VLAN

Spread Spectrum and Modulation (typical):
• DSSS with DBPSK, DQPSK, CCK
• OFDM with BPSK, QPSK, 16QAM, 64QAM
• 802.11b: CCK @ 11/5.5 Mbps, DQPSK @ 2 Mbps, DBPSK @ 11 Mbps
• 802.11a/g: 64QAM @ 54/48 Mbps, 16QAM @ 36/24 Mbps, QPSK @ 18/12 Mbps, BPSK @ 9/6 Mbps
• 802.11n: 64QAM @ 300 Mbps to BPSK @ 6.5 Mbps (multiple rates supported)

Operating Channels (central frequency):
US:
2.412 to 2.462 GHz (11 channels)
5.18 to 5.24 GHz (4 channels)
EU:
2.412 to 2.472 GHz (13 channels)
5.18 to 5.24 GHz (4 channels)
JP:
2.412 to 2.472 GHz (13 channels, OFDM)
2.412 to 2.484 GHz (14 channels, DSSS)
5.18 to 5.24 GHz (4 channels for W52)

Security:
• SSID broadcast enable/disable
• Firewall for MAC/IP/Protocol/Port-based filtering
• 64-bit and 128-bit WEP encryption, WPA /WPA2-Personal and Enterprise (IEEE 802.1X/RADIUS, TKIP and AES)

Transmission Rates:
802.11b: 1, 2, 5.5, 11 Mbps
802.11a/g: 6, 9, 12, 18, 24, 36, 48, 54 Mbps
802.11n: 6.5 to 300 Mbps (multiple rates supported)

TX Transmit Power:
802.11b:
1 to 11 Mbps: Typ. 18 dBm (± 1.5 dBm)
802.11g:
6 to 24 Mbps: Typ. 18 dBm (± 1.5 dBm)
36 to 48 Mbps: Typ. 17 dBm (± 1.5 dBm)
54 Mbps: Typ. 15 dBm (± 1.5 dBm)
802.11a:
6 to 24 Mbps: Typ. 17 dBm (± 1.5 dBm)
36 to 48 Mbps: Typ. 16 dBm (± 1.5 dBm)
54 Mbps: Typ. 14 dBm (± 1.5 dBm)

TX Transmit Power MIMO:
802.11a/n (20/40 MHz):
MCS15 20 MHz: Typ. 13 dBm (± 1.5 dBm)

MCS15 40 MHz: Typ. 12 dBm (± 1.5 dBm)
802.11g/n (20 MHz):
MCS15 20 MHz: Typ. 14 dBm (± 1.5 dBm)
RX Sensitivity:
802.11b:
-92 dBm @ 1 Mbps, -90 dBm @ 2 Mbps, -88 dBm @ 5.5 Mbps, -84 dBm @ 11 Mbps
802.11g:
-87 dBm @ 6 Mbps, -86 dBm @ 9 Mbps, -85 dBm @ 12 Mbps, -82 dBm @ 18 Mbps, -80 dBm @ 24 Mbps, -76 dBm @ 36 Mbps, -72 dBm @ 48 Mbps, -70 dBm @ 54 Mbps
802.11a:
-87 dBm @ 6 Mbps, -86 dBm @ 9 Mbps, -85 dBm @ 12 Mbps, -82 dBm @ 18 Mbps, -80 dBm @ 24 Mbps, -76 dBm @ 36 Mbps, -72 dBm @ 48 Mbps, -70 dBm @ 54 Mbps
RX Sensitivity MIMO:
802.11a/n:
-68 dBm @ MCS15 40 MHz, -70 dBm @ MCS7 40 MHz, -69 dBm @ MCS15 20 MHz, -71 dBm @ MCS7 20 MHz
802.11g/n:
-69 dBm @ MCS15 20 MHz, -71 dBm @ MCS7 20 MHz

Protocol Support

General Protocols: Proxy ARP, DNS, HTTP, HTTPS, IP, ICMP, SNTP, TCP, UDP, RADIUS, SNMP, PPPoE, DHCP
AP-only Protocols: ARP, BOOTP, DHCP, STP/RSTP (IEEE 802.1D/w)

Interface

Default Antennas: 4 dual-band omni-directional antennas, 5 dBi at 2.4 GHz, 2 dBi at 5 GHz, N-type (male)
Connector for External Antennas: N-type (female)
M12 Ports: 2, 10/100/1000BaseT(X), auto negotiation speed, F/H duplex mode, and auto MDI/MDI-X connection (female)
Console Port: RS-232 (waterproof RJ45-type)
LED Indicators: PWR, FAULT, STATE, WLAN1, WLAN2, LAN1, LAN2
Alarm Contact (digital output, M12 connector): 1 relay output with current carrying capacity of 1 A @ 24 VDC
Digital Inputs (M12 connector, male): 2 electrically isolated inputs
- +13 to +30 V for state "1"
- +3 to -30 V for state "0"
- Max. input current: 8 mA

Physical Characteristics

Housing: Metal, IP68 protection
Weight: 1.8 kg
Dimensions: 224 x 147.7 x 64.5 mm (8.82 x 5.82 x 2.54 in)
Installation: Wall mounting (standard), DIN-Rail mounting (optional), pole mounting (optional)

Environmental Limits

Operating Temperature: -40 to 75°C (-40 to 167°F)
Storage Temperature: -40 to 85°C (-40 to 185°F)
Ambient Relative Humidity: 5% to 100% (non-condensing)

Power Requirements

Input Voltage: 12 to 48 VDC, redundant dual DC power inputs or 48 VDC Power-over-Ethernet plus (IEEE 802.3at compliant)
*Compliant with EN 50155 on 24 VDC
Connector: M12 male connector with A-coding
Power Consumption: 12 to 48 VDC, 1.5 A (max.)
Reverse Polarity Protection: Present

Standards and Certifications

Safety: UL 60950-1, EN 60950-1
EMC: EN 301 489-1/17, FCC Part 15 Subpart B, EN 55022/55024
Radio: EN 300 328, EN 301 893, DSPR (Japan)
Rail Traffic: EN 50155, EN 50121-1/4
Note: Please check Moxa's website for the most up-to-date certification status.

Warranty

Warranty Period: 5 years
Details: See www.moxa.com/warranty

Dimensions

Unit: mm (inch)

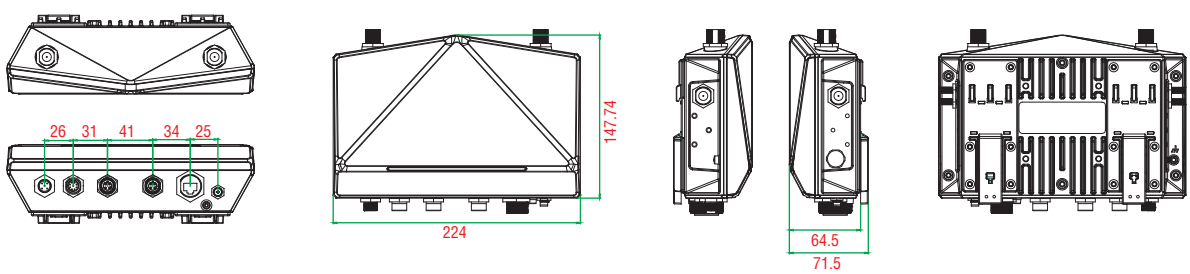

Top & Bottom Views | Front View | Side Views | Rear View

Ordering Information

Available Models

AWK-6232-M12-US-T: IEEE 802.11a/b/g/n IP68 dual-RF wireless AP/bridge/client, US band, -40 to 75°C operating temperature
AWK-6232-M12-EU-T: IEEE 802.11a/b/g/n IP68 dual-RF wireless AP/bridge/client, EU band, -40 to 75°C operating temperature
AWK-6232-M12-JP-T: IEEE 802.11a/b/g/n IP68 dual-RF wireless AP/bridge/client, JP band, -40 to 75°C operating temperature
Note: Please visit Moxa's website for a complete list of optional wireless accessories and antennas available for Moxa's wireless products.

Package Checklist

- AWK-6232 wireless AP/bridge/client
- 4 dual-band omni-directional antennas (5/2 dBi, N-type male, 2.4/5 GHz)
- Wall mounting kit (includes 2 supports)
- Field-installable power plug
- Field-installable Ethernet plug
- 1 metal cap to cover M12-male DI/O connector
- 1 metal cap to cover RJ45 connector
- 1 metal cap to cover M12-female LAN connector
- 2 transparent plastic sticks for field-installable plugs
- Documentation and software CD
- Quick installation guide (printed)
- Warranty card

Wireless Antenna Selection Guide

	IEEE 802.11b/g 2.4 GHz Wireless Antennas				IEEE 802.11a 5 GHz Wireless Antennas	
				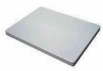		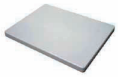
	ANT-WSB-AHRM-05-1.5m	ANT-WSB-ANF-09	ANT-WSB-PNF-12	ANT-WSB-PNF-18	ANT-WSB5-ANF-12	ANT-WSB5-PNF-18
Frequency Range	2.4 to 2.5 GHz				5.1 to 5.9 GHz	
Antenna Type	λ/4 Dipole	Omni-directional	Directional, Panel	Directional, Panel	Omni-directional	Directional, Panel
Typical Antenna Gain	5 dBi	9 dBi	12 dBi	18 dBi	12 dBi	18 dBi
Description	2.4 GHz, omni-directional/ dipole antenna, 5 dBi	2.4GHz, omni-directional antenna, 9 dBi, N-type (female)	2.4 GHz, panel antenna, 12 dBi, N-type (female)	2.4 GHz, panel antenna, 18 dBi, N-type (female)	5 GHz, omni-directional antenna, 12 dBi, N-type (female)	5 GHz, panel antenna, 18 dBi, N-type (female)
Impedance	50 ± 5 ohms	50 ± 5 ohms	50 ± 5 ohms	50 ± 5 ohms	50 ± 5 ohms	50 ± 5 ohms
Polarization	Vertical	Linear	Linear	Linear	Linear	Linear
HPBW/Horizontal	360°	360°	50°	30°	360°	10°
HPBW/Vertical	–	10°	30°	20°	6°	10°
V.S.W.R.	2.0	1 : 1.3 Max.	1 : 1.5 Max.	1 : 1.5 Max.	1 : 1.3 Max.	1 : 1.5 Max.
Power Handling	–	15 W Max.	10 W Max.	15 W Max.	10 W Max.	10 W Max.
Connector(s)	RP-SMA (male)	N-type (female)	N-type (female)	N-type (female)	N-type (female)	N-type (female)
Operating Temperature	-40 to 80°C	-40 to 80°C	-40 to 80°C	-40 to 80°C	-40 to 80°C	-40 to 80°C
IP rating	–	IP65	IP65	IP65	IP65	IP65
Antenna Profile	–	420 mm length	215 x 90 x 30 mm	270 x 205 x 15 mm	420 mm length	270 x 205 x 15 mm
Weight	300 g	430 g	560 g	310 g	430 g	990 g
Related Products	AWK-1121/1127, AWK-3121, AWK-3121-SSC, AWK-3131, AWK-5222, AWK-5232, NPort W2150/2250 Plus, NPort W2004	AWK-1121/1127, AWK-3121, AWK-3131, AWK-4121, AWK-4131, AWK-5222, AWK-5232, AWK-6222, AWK-6232, NPort W2150/2250 Plus, NPort W2004				

	IEEE 802.11a/b/g 2.4/5 GHz Dual-band Antennas					
						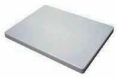
	ANT-WDB-ANM-0502	ANT-WDB-ANM-0407	ANT-WDB-ANF-0407	ANT-WDB-ANM-0609	ANT-WDB-ANF-0609	ANT-WDB-PNF-1518
Frequency Range	2.4 to 2.5 / 5.1 to 5.9 GHz					
Antenna Type	Omni-directional	Omni-directional	Omni-directional	Omni-directional	Omni-directional	Directional, Panel
Typical Antenna Gain	2/5 dBi	4/7 dBi	4/7 dBi	6/9 dBi	6/9 dBi	15/18 dBi
Description	2.4/5 GHz, dual-band omni-directional antenna, 2/5 dBi, N-type (male)	2.4/5 GHz, dual-band omni-directional antenna, 4/7 dBi, N-type (male)	2.4/5 GHz, dual-band omni-directional antenna, 4/7 dBi, N-type (female)	2.4/5 GHz, dual-band omni-directional antenna, 6/9 dBi, N-type (male)	2.4/5 GHz, dual-band omni-directional antenna, 6/9 dBi, N-type (female)	2.4/5 GHz, dual-band panel antenna, 15/18 dBi, N-type (female)
Impedance	50 ± 5 ohms	50 ± 5 ohms	50 ± 5 ohms	50 ± 5 ohms	50 ± 5 ohms	50 ± 5 ohms
Polarization	Linear	Linear	Linear	Linear	Linear	Linear
HPBW/Horizontal	360°	360°	360°	360°	360°	50/10°
HPBW/Vertical	65°	10/8°	10/8°	10/8°	10/8°	30/10°
V.S.W.R.	1 : 2.0 Max.	1 : 1.5 Max.	1 : 1.5 Max.	1 : 1.5 Max.	1 : 1.5 Max.	1 : 1.5 Max.
Power Handling	2 W Max.	10 W Max.	10 W Max.	10 W Max.	10 W Max.	20 W Max.
Connector(s)	N-type (male)	N-type (male)	N-type (female)	N-type (male)	N-type (female)	N-type (female)
Operating Temperature	-40 to 80°C	-40 to 80°C	-40 to 80°C	-40 to 80°C	-40 to 80°C	-40 to 80°C
IP rating	IP67	IP65	IP65	IP65	IP65	IP65
Antenna Profile	220 mm length	220 mm length	260 mm length	632 mm length	660 mm length	270 x 205 x 15 mm
Weight	72 g	115g	155 g	238 g	286 g	1020±10 g
Related Products	AWK-4121, AWK-4131, AWK-6222, AWK-6232		AWK-1121/1127, AWK-3121, AWK-3131, AWK-4121, AWK-4131, AWK-5222, AWK-5232, AWK-6222, AWK-6232, NPort W2150/2250 Plus, NPort W2004	AWK-4121, AWK-4131, AWK-6222, AWK-6232	AWK-1121/1127, AWK-3121, AWK-3131, AWK-4121, AWK-4131, AWK-5222, AWK-5232, AWK-6222, AWK-6232, NPort W2150/2250 Plus, NPort W2004	

Wireless Accessories Selection Guide

Cables

	CRF-N0117SA-3M	CRF-N0429N-3M	A-CRF-NMNM-LL4-300	A-CRF-NMNM-LL4-600	A-CRF-NMNM-LL4-900	A-CRF-RMNM-L1-300	A-CRF-RMNM-L1-600	A-CRF-RMNM-L1-900	A-CRF-RFRM-S1-060	A-CRF-QMAMNM-R2-50	A-CRF-RFQMAM-R2-50
	CFD200 cable, N-type (male) to RP SMA (male), 3 m	CFD400 cable, N-type (male) to N-type (male), 3 m	LMR-400 Lite cable, N-type (male) to N-type (male), 3 m	LMR-400 LITE cable, N-type (male) to N-type (male), 6 m	LMR-400 LITE cable, N-type (male) to N-type (male), 9 m	LMR-195 Lite cable, N-type (male) to RP SMA (male), 3 m	LMR-195 Lite cable, N-type (male) to RP SMA (male), 6 m	LMR-195 Lite cable, N-type (male) to RP SMA (male), 9 m	S141 cable, RP-SMA (male) to RP-SMA (female), 0.6 m	RG316 cable, QMA (male) to N-type (male)	RG316 cable, QMA (male) to RP-SMA (female)
Cable Type	CFD200	CFD400	LMR-400Lite	LMR-400 Lite	LMR-400 Lite	LMR-195 Lite	LMR-195 Lite	LMR-195 Lite	S141	RG316	RG316
Connector Type	N-type male to RP SMA male	N-type male to N-type male	N-type male to N-type male	N-type male to N-type male	N-type male to N-type male	N-type male to RP SMA male	N-type male to RP SMA male	N-type male to RP SMA male	RP-SMA male to RP-SMA female	QMA male to N-type male	QMA male to RP-SMA female
Cable Length	3 m	3 m	3 m	6 m	9 m	3 m	6 m	9 m	0.6 m	0.5 m	0.5 m
Outer Dimension	5 mm	10.3 mm	10.29 mm	10.29 mm	10.29 mm	4.95 mm	4.95 mm	4.95 mm	5 mm	2.54 mm	2.54 mm
Min. Bend Radius	12.7 mm	24.5 mm	25.4 mm	25.4 mm	25.4 mm	12.7 mm	12.7 mm	12.7 mm	12.7 mm	15 mm	15 mm
	55.4@2.5 GHz 86.5@5.8 GHz	22.2@2.5 GHz 35.5@5.8 GHz		22.2@2.5 GHz 35.5@5.8 GHz	22.2@2.5 GHz 35.5@5.8 GHz	62.4@2.5 GHz 98.1@5.8 GHz	62.4@2.5 GHz 98.1@5.8 GHz	62.4@2.5 GHz 98.1@5.8 GHz	75.4@3 GHz 98.4@5 GHz	206@2.4 GHz 345@6 GHz	206@2.4 GHz 345@6 GHz
Related Products	AWK-	AWK-4121, AWK-4131, AWK-6222, AWK-6232-M12				AWK-1121/1127, AWK-3121, AWK-3121-SSC, AWK-3131, AWK-5222, AWK-5232				AWK-3121-M12, AWK-3131-M12, AWK-5222-M12, AWK-5232-M12	

Termination Resistors

	A-TRM-50-NM	A-TRM-50-RM
Description	Termination resistor, 50 ohms, N-type (male)	Termination resistor, 50 ohms, RP-SMA (male)
Related Products	AWK-4121, AWK-4131, AWK-6222, AWK-6232	AWK-1121/1127, AWK-3121, AWK-3121-SSC, AWK-3131, AWK-5222, AWK-5232

Power Amplifiers

	A-WPA-2410gM-IDU	A-WPA-5410aM-IDU
Description	Wireless power amplifier	Wireless power amplifier
Signal Type	2.4 GHz band antenna (included)	5 GHz band antenna (included)
Connector Type	RP-SMA connector	RP-SMA connector
Power Output	1 W	1 W
Power Consumption	12 VDC	12 VDC
Power Cable	Power plug to power jack cable (included)	Power plug to power jack cable (included)
Dimensions	92 x 60 x 31 mm	92 x 60 x 31 mm
Related Accessories	• N-type male to RP-SMA male cable • RP-SMA male to RP-SMA female cable	• N-type male to RP-SMA male cable • RP-SMA male to RP-SMA female cable
Related Products	AWK-1121/1127, AWK-3121, AWK-3121-SSC, AWK-3131, AWK-5222, AWK-5232	AWK-1121/1127, AWK-3121, AWK-3121-SSC, AWK-3131, AWK-5222, AWK-5232

Arrestors

	A-SA-NMNF-01
Frequency	0-6 GHz
Connector Type	N-type female to N-type male
Related Products	AWK-1121/1127, AWK-3121, AWK-3131, AWK-4121, AWK-4131, AWK-5222, AWK-6222

Adaptors

	A-ADP-RJ458P-DB9F-ABC01	A-ADP-QMAM-RF
Description	RJ45-to-DB9 adaptor for the ABC-01	QMA(male) to RP-SMA (female) adaptor for antenna
Related Products	All AWK series	AWK-3121-M12, AWK-3131-M12, AWK-5222-M12, AWK-5232-M12

Note: The actual product may vary in physical appearance, but the functionality will be the same.

© Moxa Inc. All Rights Reserved. Updated Mar. 1, 2012. Specifications subject to change without notice. Please visit our website for the most up-to-date product information.

Power Supplies

24/48 VDC power supplies for installation on a DIN-Rail

	24 VDC DIN-Rail Power Supplies					48 VDC DIN-Rail Power Supplies	
	DR-4524	DR-75-24	DR-120-24	MDR-40-24	MDR-60-24	DR-75-48	DR-120-48
		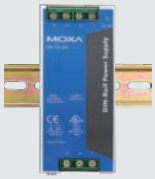				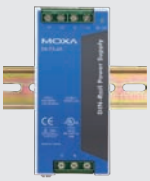	
Dimensions (mm)	78 x 67 x 93	55.5 x 100 x 125.2	65.5 x 100 x 125.2	40 x 90 x 100	40 x 90 x 100	55.5 x 100 x 125.2	65.5 x 100 x 125.2
Power	45 W	75 W	120 W	40 W	60 W	75 W	120 W
Input	85-264 VAC (47-63 Hz) or 120-370 VDC		88-132 VAC or 176-264 VAC (47-63 Hz) by switch, or 248-370 VDC	85-264 VAC (47-63 Hz) or 120-370 VDC		85-264 VAC (27-63 Hz) or 120-370 VDC	88-132 VAC or 176-264 VAC (47-63 Hz) by switch, or 248-370 VDC
Output	48 W, 24 VDC, 0-2 A	76.8 W, 24 VDC, 0-3.2 A	120 W, 24 VDC, 0-5 A	40 W, 24 VDC, 0-1.7 A	60 W, 24 VDC, 0-2.5 A	76.8 W, 48 VDC, 0-1.6 A	120 W, 48 VDC, 0-2.5 A
Over-voltage Protection	27.6-32.4 V	29-33 V		31.2-36 V		58-65 V	
Overload Protection	105-150%						
Type	Constant Current Limiting						
Reset	Auto Recovery						
Inrush Current	30 A and 115 V, or 60 A and 230 V						
Weight	400 g	550 g	650 g	260 g	280 g	550 g	650 g
Operating Temperature and Relative Humidity	-10 to 50°C (14 to 122°F) at 20 to 90% RH	-10 to 60°C (14 to 140°F) at 20 to 90% RH		-20 to 70°C (-4 to 158°F) at 20 to 90% RH		-10 to 60°C (14 to 140°F) at 20 to 90% RH	
Warranty	3 years						
Safety Standards	TÜV EN60950-1, UL508 Approved						
EMC Standards	CISPR22 (EN55022) Class B, EN61000-4-2/3/4/5/6/8/11, ENV50204, EN61000-3-2, EN50082-2						

Ordering Information

24 VDC DIN-Rail Power Supplies

DR-4524: 45W/2A DIN-Rail 24 VDC power supply with universal 85 to 264 VAC input, -10 to 50°C operating temperature

DR-75-24: 75W/3.2A DIN-Rail 24 VDC power supply with universal 85 to 264 VAC input, -10 to 60°C operating temperature

DR-120-24: 120W/5A DIN-Rail 24 VDC power supply with universal 88 to 132 VAC or 176 to 264 VAC input by switch, -10 to 60°C operating temperature

MDR-40-24: 40W/1.7A DIN-Rail 24 VDC power supply with universal 85 to 264 VAC input, -20 to 70°C operating temperature

MDR-60-24: 60W/2.5A DIN-Rail 24 VDC power supply with universal 85 to 264 VAC input, -20 to 70°C operating temperature

48 VDC DIN-Rail Power Supplies

DR-75-48: 75W/1.6A DIN-Rail 48 VDC power supply with universal 85 to 264 VAC input, -10 to 60°C operating temperature

DR-120-48: 120W/2.5A DIN-Rail 48 VDC power supply with universal 88 to132 VAC or 176 to 264 VAC input by switch, -10 to 60°C operating temperature

Power Supplies

24/48 VDC power supplies for installation on a DIN-Rail

	24 VDC DIN-Rail Power Supplies					48 VDC DIN-Rail Power Supplies	
	DR-4524	DR-75-24	DR-120-24	MDR-40-24	MDR-60-24	DR-75-48	DR-120-48
		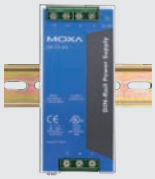				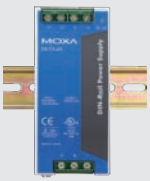	
Dimensions (mm)	78 x 67 x 93	55.5 x 100 x 125.2	65.5 x 100 x 125.2	40 x 90 x 100	40 x 90 x 100	55.5 x 100 x 125.2	65.5 x 100 x 125.2
Power	45 W	75 W	120 W	40 W	60 W	75 W	120 W
Input	85-264 VAC (47-63 Hz) or 120-370 VDC		88-132 VAC or 176-264 VAC (47-63 Hz) by switch, or 248-370 VDC	85-264 VAC (47-63 Hz) or 120-370 VDC		85-264 VAC (27-63 Hz) or 120-370 VDC	88-132 VAC or 176-264 VAC (47-63 Hz) by switch, or 248-370 VDC
Output	48 W, 24 VDC, 0-2 A	76.8 W, 24 VDC, 0-3.2 A	120 W, 24 VDC, 0-5 A	40 W, 24 VDC, 0-1.7 A	60 W, 24 VDC, 0-2.5 A	76.8 W, 48 VDC, 0-1.6 A	120 W, 48 VDC, 0-2.5 A
Over-voltage Protection	27.6-32.4 V	29-33 V		31.2-36 V		58-65 V	
Overload Protection	105-150%						
Type	Constant Current Limiting						
Reset	Auto Recovery						
Inrush Current	30 A and 115 V, or 60 A and 230 V						
Weight	400 g	550 g	650 g	260 g	280 g	550 g	650 g
Operating Temperature and Relative Humidity	-10 to 50°C (14 to 122°F) at 20 to 90% RH	-10 to 60°C (14 to 140°F) at 20 to 90% RH		-20 to 70°C (-4 to 158°F) at 20 to 90% RH		-10 to 60°C (14 to 140°F) at 20 to 90% RH	
Warranty	3 years						
Safety Standards	TÜV EN60950-1, UL508 Approved						
EMC Standards	CISPR22 (EN55022) Class B, EN61000-4-2/3/4/5/6/8/11, ENV50204, EN61000-3-2, EN50082-2						

Ordering Information

24 VDC DIN-Rail Power Supplies

DR-4524: 45W/2A DIN-Rail 24 VDC power supply with universal 85 to 264 VAC input, -10 to 50°C operating temperature

DR-75-24: 75W/3.2A DIN-Rail 24 VDC power supply with universal 85 to 264 VAC input, -10 to 60°C operating temperature

DR-120-24: 120W/5A DIN-Rail 24 VDC power supply with universal 88 to 132 VAC or 176 to 264 VAC input by switch, -10 to 60°C operating temperature

MDR-40-24: 40W/1.7A DIN-Rail 24 VDC power supply with universal 85 to 264 VAC input, -20 to 70°C operating temperature

MDR-60-24: 60W/2.5A DIN-Rail 24 VDC power supply with universal 85 to 264 VAC input, -20 to 70°C operating temperature

48 VDC DIN-Rail Power Supplies

DR-75-48: 75W/1.6A DIN-Rail 48 VDC power supply with universal 85 to 264 VAC input, -10 to 60°C operating temperature

DR-120-48: 120W/2.5A DIN-Rail 48 VDC power supply with universal 88 to132 VAC or 176 to 264 VAC input by switch, -10 to 60°C operating temperature

INJ-24A Series

Gigabit High Power PoE+ Injectors

- High power mode provides up to 60 W
- DIP switch configurator and LED indicator for PoE management
- 3KV surge resistance for harsh environments
- Mode A and Mode B selectable for flexible installation
- Built-in 24/48 VDC booster for redundant dual power inputs
- -40 to 75°C operating temperature range (T model)

Specifications

Technology

Standards:
IEEE 802.3af/at for Power-over-Ethernet
IEEE 802.3 for 10BaseT
IEEE 802.3u for 100BaseT(X)
IEEE 802.3ab for 1000BaseT(X)

Interface

RJ45 Ports: 10/100/1000BaseT(X) for PoE OUT and DATA IN
PoE Pinout:
Default: V+, V+, V-, V- for pin 4, 5, 7, 8 (Midspan, MDI, Mode B)
Custom DIP switch setting: V+, V+, V-, V- for pin 1, 2, 3, 6 (Endspan, MDI, Mode A)
LED Indicators: P1, P2, 802.3af/at, 4-pair

Power Requirements

Input Voltage: 24/48 (20 to 60 V) VDC, redundant inputs
Input Current: Max. 3.72A @ 24 VDC (high power 4-pair mode)
Overload Current Protection: Present
Connection: 1 removable 4-contact terminal block
Reverse Polarity Protection: Present

Physical Characteristics

Housing: Plastic, IP30 protection
Dimensions: 115 × 30.3 × 78.8 mm (H x W x D)
Weight: 245 g
Installation: DIN-Rail mounting, Wall mounting optional

Environmental Limits

Operating Temperature:
Standard Models: 0 to 60°C (32 to 140°F)
Wide Temp. Models: -40 to 75°C (-40 to 167°F)
Storage Temperature: -40 to 85°C (-40 to 185°F)
Ambient Relative Humidity: 5 to 95% (non-condensing)

Standards and Certifications

Safety: UL 508 (pending)
EMI: FCC Part 15 Subpart B Class A, EN 55022 Class A
EMS:
EN 61000-4-2 (ESD) Level 3, EN 61000-4-3 (RS) Level 3,
EN 61000-4-4 (EFT) Level 3, EN 61000-4-5 (Surge) Level 3,
EN 61000-4-6 (CS) Level 3, EN 61000-4-8
Shock: IEC 60068-2-27
Freefall: IEC 60068-2-32
Vibration: IEC 60068-2-6
Note: Please check Moxa's website for the most up-to-date certification status.

MTBF (mean time between failures)

Time: N/A
Database: Telcordia (Bellcore), GB

Warranty

Warranty Period: 5 years
Details: See www.moxa.com/warranty

Dimensions

Unit: mm (inch)

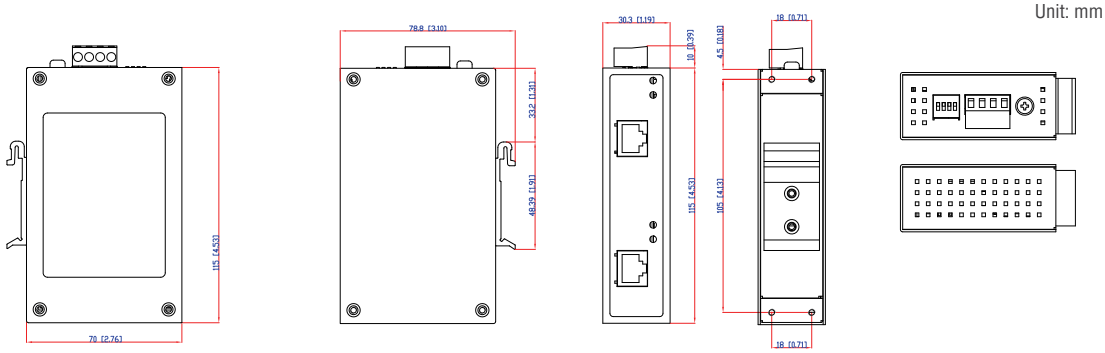

Side View | Side View | Front View | Rear View | Top and Bottom Views

Ordering Information

Available Models

INJ-24A: Gigabit high-power PoE+ injector, max. output of 60 W at 24/48 VDC, 0 to 60°C operating temperature
INJ-24A-T: Gigabit high power PoE+ injector, max. output of 60 W at 24/48 VDC, -40 to 75°C operating temperature

Package Checklist

- INJ-24A high power PoE+ injector
- Hardware installation guide (printed)
- Warranty card

© Moxa Inc. All Rights Reserved. Updated Oct. 15, 2012. Specifications subject to change without notice. Please visit our website for the most up-to-date product information.

ANT-WDB-ANF-0609

Dual-band omni-directional antenna: 6 dBi at 2.4 GHz or 9 dBi at 5 GHz

- High-gain antenna to enhance performance
- Waterproof N-type connector
- Lightweight
- Compact form factor
- Pole-mounting support
- Housing provides IP65 protection
- -40 to 80˚C operating temperature range

Specifications

Antenna Characteristics

Frequency: 2.4 to 2.5 or 5.1 to 5.9 GHz
Antenna Type: Omni-directional
Typical Antenna Gain: 6/9 dBi
Connector: N-type (female)
Impedance: 50±5 ohms
Polarization: Linear
HPBW/horizontal: 360°
HPBW/vertical: 8/10°
V.S.W.R.: 1:1.5 max.
Power Handling: 10 W max.

Physical Characteristics

Weight: 286 g
Dimensions:
Diameter: 35 mm
Length: 660 mm
IP Rating: IP65
Radome Color: White
Radome Material: Glass fiber

Environmental Limits

Operating Temperature: -40 to 80°C (-40 to 176°F)
Storage Temperature: -40 to 80°C (-40 to 176°F)
Ambient Relative Humidity: 5 to 95% (30°C, non-condensing)

Field Patterns

H-Plane for 2.4 GHz

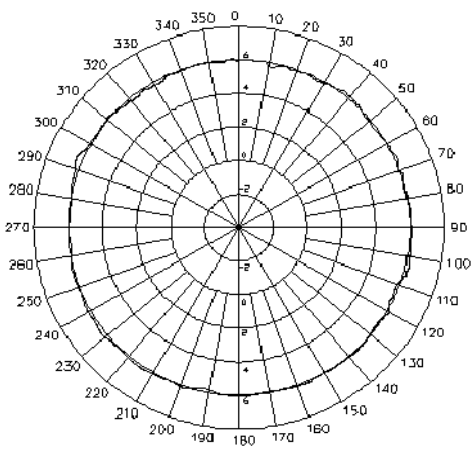

E-Plane for 2.4 GHz

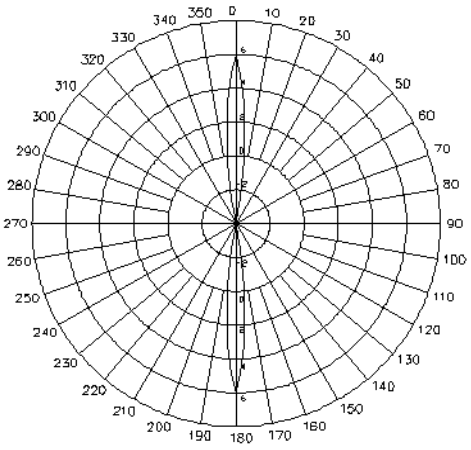

H-Plane for 5 GHz

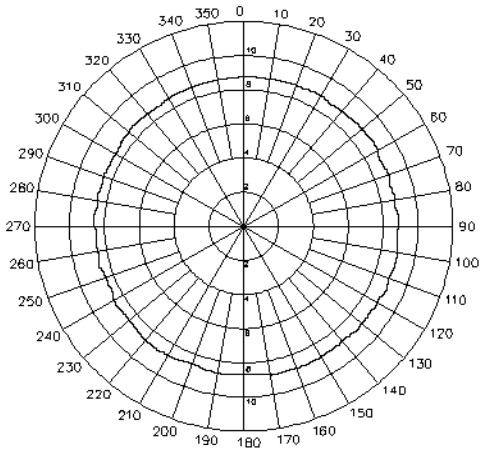

E-Plane for 5 GHz

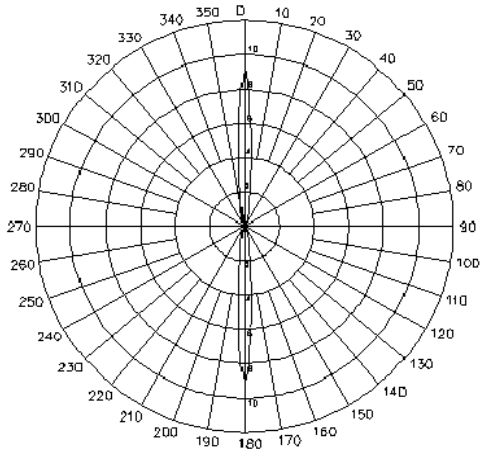

Dimensions

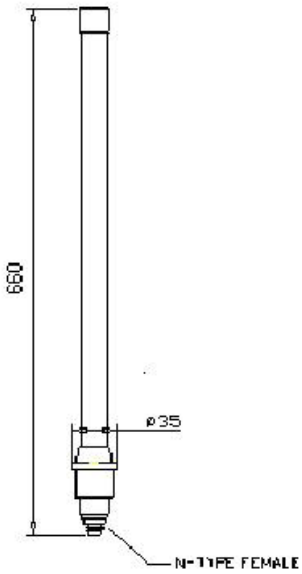

Mounting

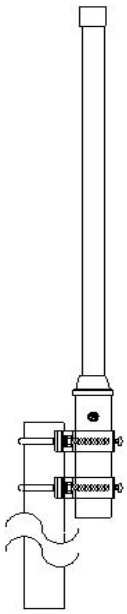

Ordering Information

Available Models

ANT-WDB-ANF-0609: 2.4/5 GHz, dual-band omni-directional antenna, 6/9 dBi, N-type (female)

Optional Accessories (can be purchased separately)

A-CRF-NMNM-LL4-300: LMR-400 LITE cable, N-type (male) to N-type (male), 3 meters
A-CRF-NMNM-LL4-600: LMR-400 LITE cable, N-type (male) to N-type (male), 6 meters
A-CRF-NMNM-LL4-900: LMR-400 LITE cable, N-type (male) to N-type (male), 9 meters
CRF-N0429N-3M: CFD400 cable, N-type (male) to N-type (male), 3 meters
CRF-N0117SA-3M: CFD200 cable, N-type (male) to RP SMA (male), 3 meters
A-CRF-RMNM-L1-300: LMR-195 LITE cable, N-type (male) to RP SMA (male), 3 meters
A-CRF-RMNM-L1-600: LMR-195 LITE cable, N-type (male) to RP SMA (male), 6 meters
A-CRF-RMNM-L1-900: LMR-195 LITE cable, N-type (male) to RP SMA (male), 9 meters

Can be used with the following products

AWK Series: AWK-3121, AWK-4121, AWK-5222, AWK-6222
NPort W2000 Series: NPort W2150 Plus, NPort W2250 Plus, NPort W2004

© Moxa Inc. All Rights Reserved. Updated Jul. 5, 2010. Specifications subject to change without notice. Please visit our website for the most up-to-date product information.

ANT-WDB-PNF-1518

Dual-band panel antenna: 15 dBi at 2.4 GHz or 18 dBi at 5 GHz

- High-gain antenna to enhance performance
- Waterproof N-type connector
- Lightweight
- Compact form factor
- Pole-mounting support
- Housing provides IP65 protection
- -40 to 80˚C operating temperature range

Specifications

Antenna Characteristics

Frequency: 2.4 to 2.5 or 5.1 to 5.9 GHz
Antenna Type: Directional panel type
Typical Antenna Gain: 15/18 dBi
Connector: N-type (female)
Impedance: 50±5 ohms
Polarization: Linear
HPBW/horizontal: 10/50°
HPBW/vertical: 10/30°
V.S.W.R.: 1:1.5 max.
Power Handling: 20 W max.

Physical Characteristics

Weight: 1020±10 g
Dimensions: 270 x 205 x 15 mm
IP Rating: IP65
Radome Color: White
Radome Material: PC and ABS

Environmental Limits

Operating Temperature: -40 to 80°C (-40 to 176°F)
Storage Temperature: -40 to 80°C (-40 to 176°F)
Ambient Relative Humidity: 5 to 95% (30°C, non-condensing)

Field Patterns

H-Plane for 2.4 GHz

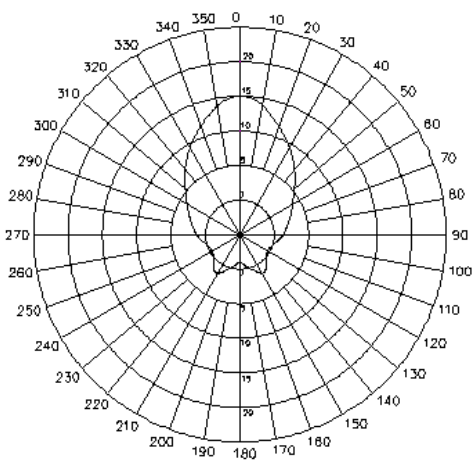

E-Plane for 2.4 GHz

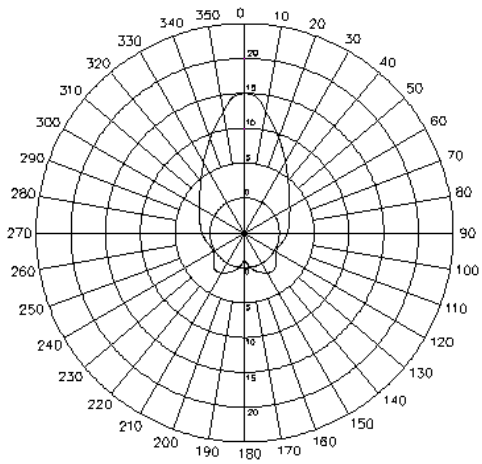

H-Plane for 5 GHz

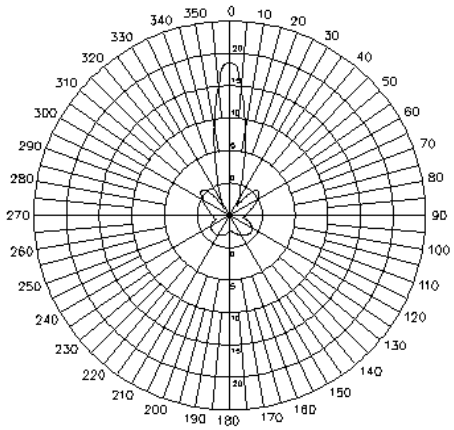

E-Plane for 5 GHz

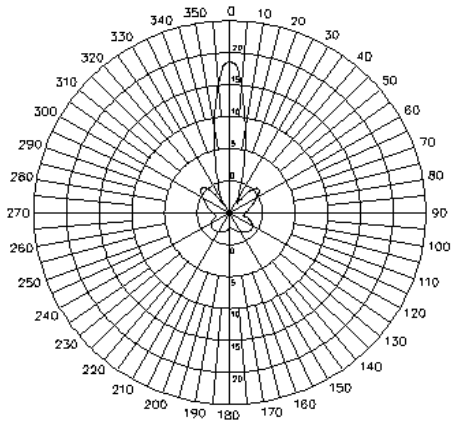

Dimensions

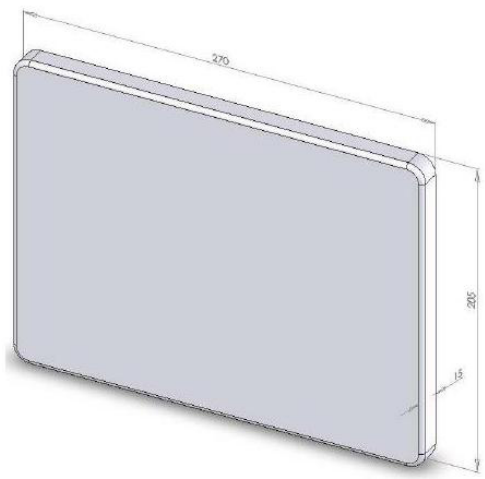

Mounting

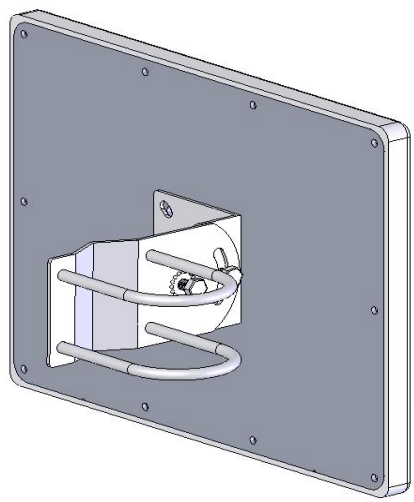

Ordering Information

Available Models

ANT-WSB-PNF-1518: 2.4/5 GHz, dual-band panel antenna, 15/18 dBi, N-type (female)

Optional Accessories (can be purchased separately)

A-CRF-NMNM-LL4-300: LMR-400 LITE cable, N-type (male) to N-type (male), 3 meters
A-CRF-NMNM-LL4-600: LMR-400 LITE cable, N-type (male) to N-type (male), 6 meters
A-CRF-NMNM-LL4-900: LMR-400 LITE cable, N-type (male) to N-type (male), 9 meters
CRF-N0429N-3M: CFD400 cable, N-type (male) to N-type (male), 3 meters
CRF-N0117SA-3M: CFD200 cable, N-type (male) to RP SMA (male), 3 meters
A-CRF-RMNM-L1-300: LMR-195 LITE cable, N-type (male) to RP SMA (male), 3 meters
A-CRF-RMNM-L1-600: LMR-195 LITE cable, N-type (male) to RP SMA (male), 6 meters
A-CRF-RMNM-L1-900: LMR-195 LITE cable, N-type (male) to RP SMA (male), 9 meters

Can be used with the following products

AWK Series: AWK-3121, AWK-4121, AWK-5222, AWK-6222
NPort W2000 Series: NPort W2150 Plus, NPort W2250 Plus, NPort W2004

© Moxa Inc. All Rights Reserved. Updated Jul. 5, 2010. Specifications subject to change without notice. Please visit our website for the most up-to-date product information.

PK-DC2DOF

Pole-mounting kit

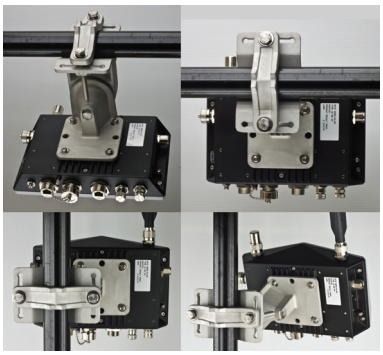

Specifications

Physical Characteristics

Material: Aluminum Alloy ADC12
Color: Silver White

Warranty

Warranty Period: 1 year
Details: See www.moxa.com/warranty

Dimensions

Unit: mm (inch)

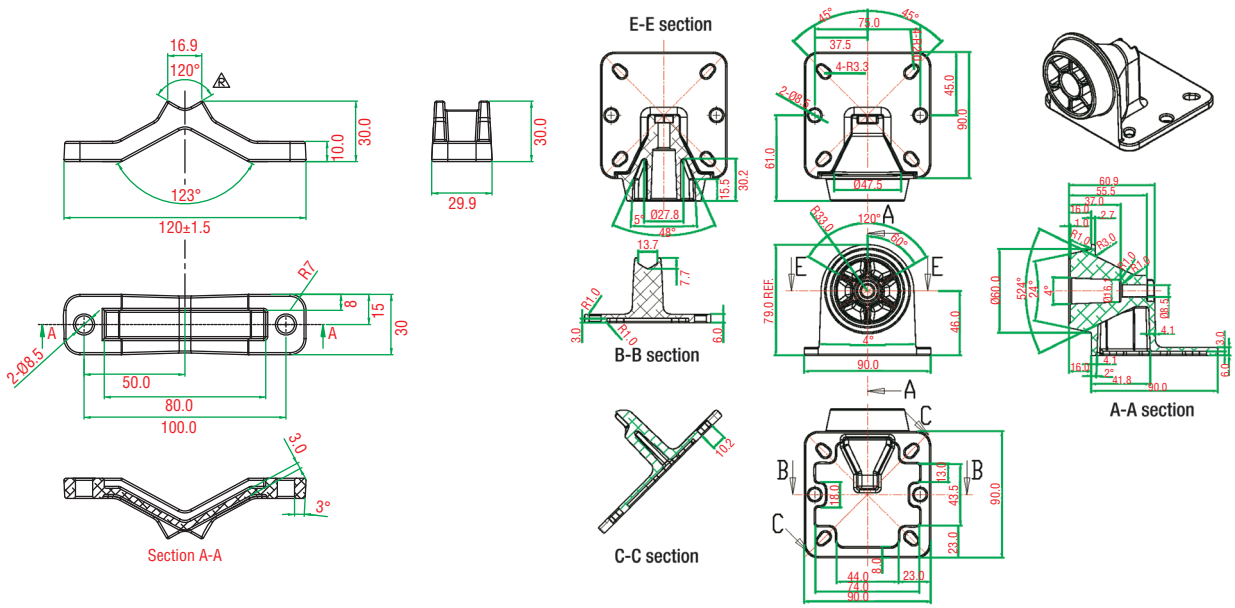

Dimensions

Unit: mm (inch)

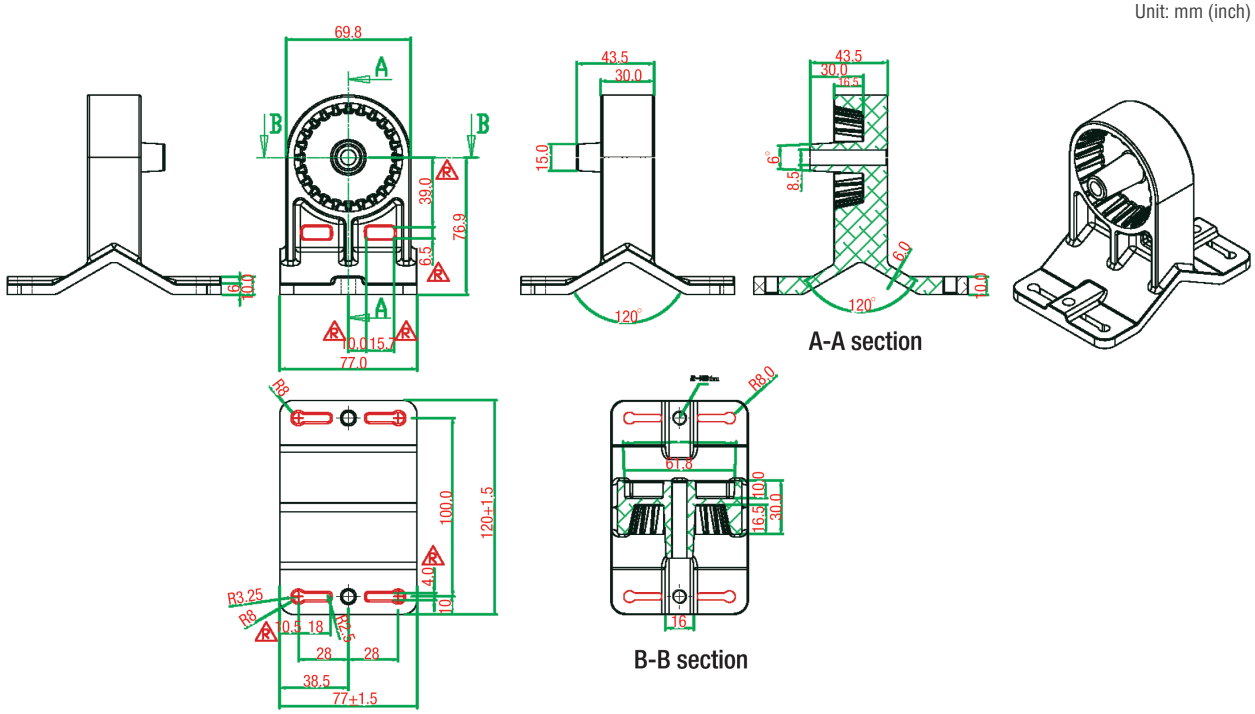

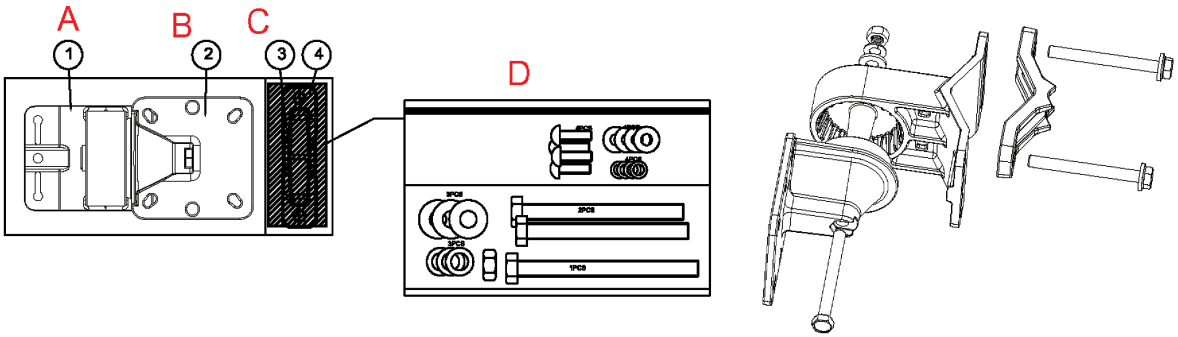

Ordering Information

Available Models

PK-DC2DOF: Pole-mounting kit

Can be used with the following products

AWK-4121 Series, AWK-4131-M12, AWK-6222 Series, AWK-6232-M12

Package Checklist

- 3 pcs PK-DC2DOF parts
- 2 pcs M8 Screws, L=80mm
- 1 pcs M8 Screws, L=90mm
- 1 pcs M8 Nuts
- 3 pcs M8 Washers

© Moxa Inc. All Rights Reserved. Updated Dec. 15, 2011. Specifications subject to change without notice. Please visit our website for the most up-to-date product information.

SNAP 19” Rackmount DIN-Rail Adapter Brackets

BRKT-19DR-4U

BRKT-19DR-5U-CM

Features & Benefits

- One-piece construction with no assembly required
- Keeps cabinet tidy with optional cable management
- Rugged steel construction with lifetime warranty
- Supports up to 50lbs of DIN-Rail equipment

Product description

SNAP 19” rackmount DIN-Rail adapter brackets allow you to mount standard 35mm DIN-Rail devices within your 19” rack or cabinet. Constructed of heavy-duty powder-coated 16-gauge steel, the adapter brackets each support up to 50 pounds of weight. Available in two configurations, the 5U version features a built-in cable management system to help keep your cables organized, while the slender 4U design allows you to optimize your cabinet storage capacity.

Product Variants

Part Number	Rackspace Requirements	Cable Management
BRKT-19DR-4U	4U	None
BRKT-19DR-5U-CM	5U	Included

Ambient Conditions

Operating temperature: -40°C - 80°C
Storage/transport temperature: -40°C - 80°C

Mechanical Construction

Rack Dimensions

BRKT-19DR-4U: (H x D x W) 6.75” x 6.75” x 19”
BRKT-19DR-5U-CM: (H x D x W) 8.65” x 6.75” x 19”

Mounting: 19” rackmount via four mounting holes
Weight: 5lbs.
Protection class: IP20
DIN-Rail Depth - 7.5mm

Materials of Construction

Body: 16-gauge powder-coat painted steel
DIN-Rail: Steel
Optional Cable Management: Thermoplastic

Warranty

Lifetime warranty on materials and workmanship

BRKT-19DR-5U-CM Rackmount Adapter Bracket with Cable Management

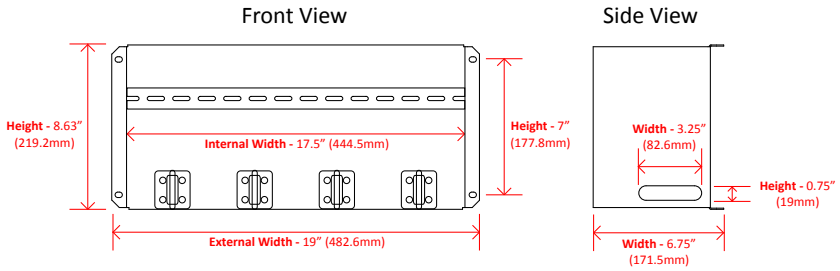

BRKT-19DR-4U Rackmount Adapter Bracket

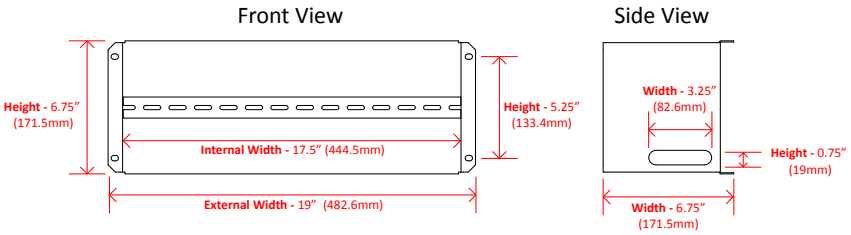

Scope of Delivery

BRKT-19DR-4U: Rackmount adapter
BRKT-19DR-5U-CM: Rackmount adapter, 4ea. pre-mounted cable management guides

Phone: 214-613-0349 | Fax: 866-622-4068 | www.dinspace.com

© DINSpace. All Rights Reserved. Specifications subject to change without notice.

DEHNpatch
DPA M CLE RJ45B 48

DEHN + SÖHNE

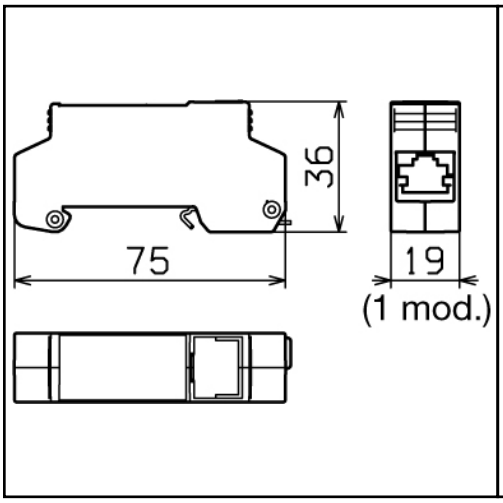

Dimension drawing DPA CLE

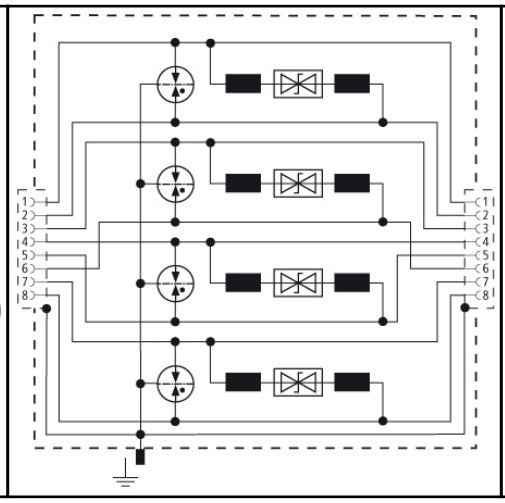

Protection for all pairs due to powerful gas discharge tubes and a filter matrix adapted to each pair.

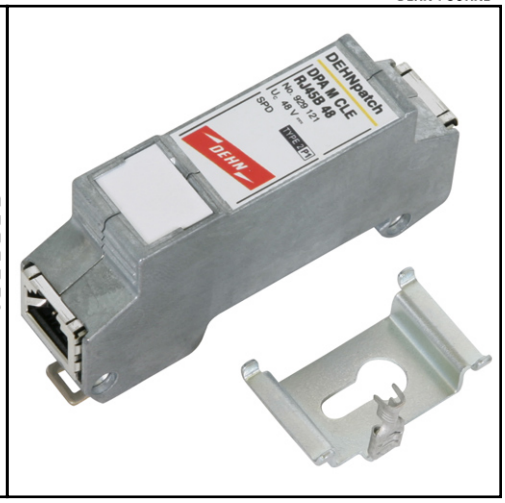

Universal SPD for Industrial Ethernet and similar applications in structured cabling systems according to class E up to 250 Hz. Fully shielded adapter with sockets for DIN rail mounting

- **Ideal for retrofitting, with protection for all lines**
- **Cat. 6 in channel (class E)**
- **For use according to the lightning protection zones concept at boundaries 0_B 2 and higher**

	DPA M CLE RJ45B 48
SPD class	TYPE 2 P1
Nominal voltage [U_N]	48 V
Max. continuous operating d.c. voltage [U_C]	48 V
Max. continuous operating a.c. voltage [U_C]	34 V
Nominal current [I_L]	1 A
C2 Nominal discharge current (8/20 µs) line-line [I_n]	150 A
C2 Total nominal discharge current (8/20 µs) line-PG [I_n]	10 kA
Voltage protection level line-line for I_n C2 [U_P]	≤ V
Voltage protection level line-line for 1 kV/µs C3 [U_P]	≤ 180 V
Voltage protection level line-PG for 1 kV/µs C3 [U_P]	≤ 500 V
Capacitance line-line [C]	≤ 30 pF
Capacitance line-PG [C]	≤ 25 pF
Operating temperature range	-40°C ...+80°C
Degree of protection	IP 10
For mounting on	35 mm DIN rail acc. to EN 60715
Connection input/output	RJ45 socket / RJ45 socket
Pinning	1/2, 3/6, 4/5, 7/8
Earthing by	35 mm DIN rail acc. to EN 60715
Enclosure material	zinc die casting
Colour	bare
Test standards	IEC 61643-21
Accessories	fixing material

Ordering information	
Type	DPA M CLE RJ45B 48
Part No.	**929 121**
Packing unit	1pcs.

We reserve the right to modify design, technology, dimensions, weights and materials according to technical progress. Illustrations are non-binding. Pictures may differ from the modules described.

Bus system connector - SACC-M12MS-8Q SH - 1543236

Please be informed that the data shown in this PDF Document is generated from our Online Catalog. Please find the complete data in the user's documentation. Our General Terms of Use for Downloads are valid
(http://phoenixcontact.com/download)

Bus system connector, Ethernet CAT5, Ethernet CAT5e, 8-position, shielded, Plug straight M12, A-coded, Insulation displacement connection, Knurl material: Zinc die-cast, nickel-plated, External cable diameter 4 mm ... 8 mm

Product Features

- Safe use in the field, thanks to a high degree of protection
- Flexible: connectors for on-site assembly
- Insulation displacement connection: innovative and time-saving assembly without stripping the single wire
- Reliable signal transmission - 360° shielding in environments with electromagnetic interference

Ethernet

Key commercial data

Packing unit	1 pc
Weight per Piece (excluding packing)	46.0 GRM
Custom tariff number	85366990
Country of origin	Germany

Classifications

eCl@ss

eCl@ss 4.0	27140815
eCl@ss 4.1	27260701
eCl@ss 5.0	27143423
eCl@ss 5.1	27143423
eCl@ss 6.0	27143423
eCl@ss 7.0	27449001
eCl@ss 8.0	27449001

ETIM

ETIM 3.0	EC002062
ETIM 4.0	EC002062

Bus system connector - SACC-M12MS-8Q SH - 1543236

Classifications

ETIM

ETIM 5.0	EC002062

UNSPSC

UNSPSC 6.01	31251501
UNSPSC 7.0901	31251501
UNSPSC 11	31251501
UNSPSC 12.01	31251501
UNSPSC 13.2	31251501

Drawings

Schematic diagram

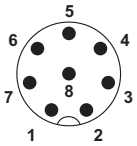

Pin assignment M12 plug, 8-pos., view plug side

Dimensioned drawing

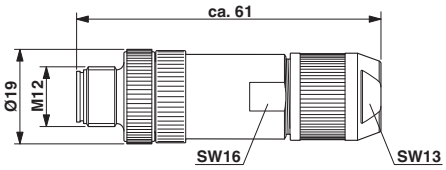

Plug, M12 x 1, straight, shielded

Phoenix Contact 2014 © - all rights reserved
http://www.phoenixcontact.com

Sealing cap - PROT-M12 FS-PA-CHAIN - 1430873

Please be informed that the data shown in this PDF Document is generated from our Online Catalog. Please find the complete data in the user's documentation. Our General Terms of Use for Downloads are valid
(http://phoenixcontact.com/download)

M12 sealing cap made of plastic with fixing band, for sensor cables, for free M12 sockets

Key commercial data

Packing unit	1 pc
Minimum order quantity	5 pc
Weight per Piece (excluding packing)	5.01 GRM
Custom tariff number	39269097
Country of origin	Germany

Technical data

Ambient conditions

Degree of protection	IP65
	IP67

Material

Inflammability class according to UL 94	V0
Material	PA 66 GF
Sealing material	NBR
Additional material specifications	PUR (Holding band)

Classifications

eCl@ss

eCl@ss 4.0	272607xx
eCl@ss 4.1	27260701
eCl@ss 5.0	27149110

Sealing cap - PROT-M12 FS-PA-CHAIN - 1430873

Classifications

eCl@ss

eCl@ss 5.1	27149110
eCl@ss 6.0	27149112
eCl@ss 7.0	27149112
eCl@ss 8.0	27149112

ETIM

ETIM 3.0	EC002040
ETIM 4.0	EC002040
ETIM 5.0	EC002040

UNSPSC

UNSPSC 6.01	31251501
UNSPSC 7.0901	31251501
UNSPSC 11	31251501
UNSPSC 12.01	31251501
UNSPSC 13.2	31251501

Drawings

Dimensioned drawing

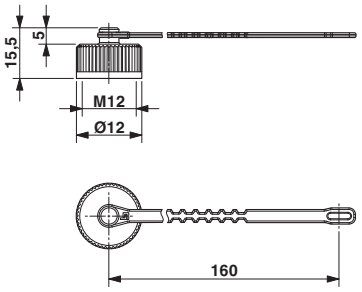

Dimensional drawing

Phoenix Contact 2014 © - all rights reserved
http://www.phoenixcontact.com

Sentinel® Connector Systems Inc.

1953 Stanton Street

York, Pa. 17404

PART NO.: 111S08080028L34

* EIGHT CONDUCTOR MODULAR PLUG
* FOR HIGH SPEED APPLICATION
* FOR CONDUCTORS WITH AN O.D. RANGE OF .037/.042
* USE FOR SOLID OR STRANDED CONDUCTORS
* PRODUCT REQUIRES A CONDUCTIVE LOAD BAR
* SHIELDED VERSION MODULAR PLUG

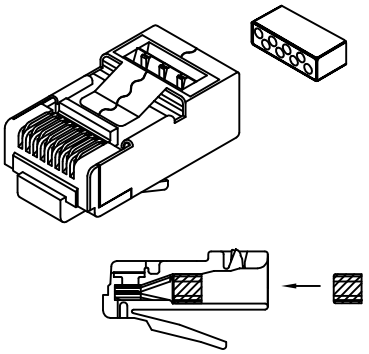

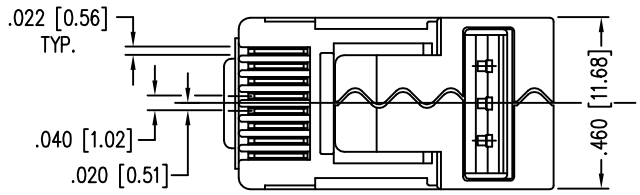

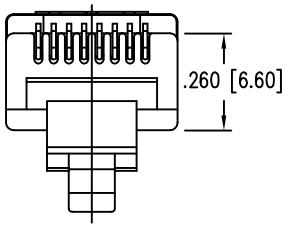

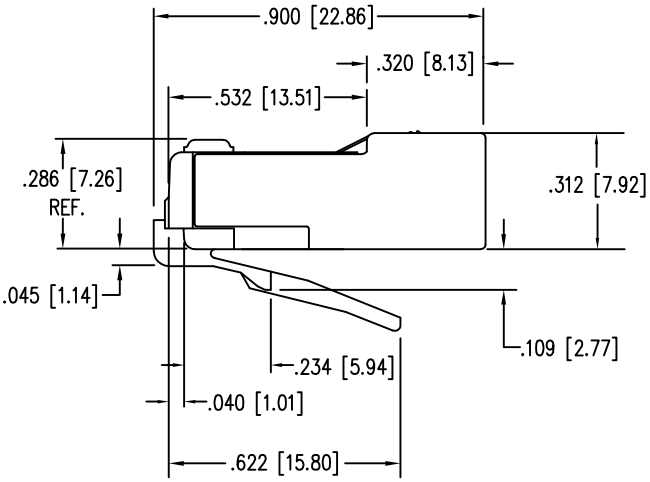

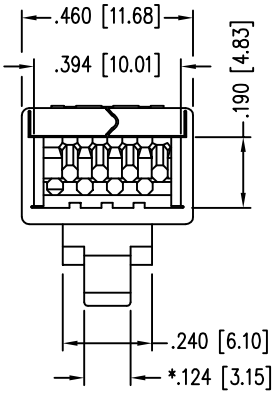

SPECIFICATIONS :

PERFORMANCE:	MEETS OR EXCEEDS CATEGORY 6 ANSI/EIA 568-C.2 PERFORMANCE TUNED TO CABLES MEETING CATEGORY 6 SPECIFICATIONS.
CONTACT MATERIAL:	PHOSPHOR BRONZE - .012 THK
CONTACT PLATING:	50 MICRO-INCH : OTHER PLATING OPTIONS AVAILABLE SELECTIVE 24 CARAT HARD GOLD PLATE IN CONTACT AREA OVER 100 MICRO-INCH MINIMUM NICKEL PLATE PER CURRENT SELECTIVE GOLD PLATING REQUIREMENTS.
PLUG MATERIAL:	POLYCARBONATE
SHIELD MATERIAL:	.012 THK CDA-260 1/4 HARD BRASS
SHIELD PLATING:	100% TIN, 100-150 MICRO-INCH TIN PLATED
PLUG TOLERANCES AND DIMENSIONS:	* COMPLIES WITH ANSI/TIA-1096-A REQUIREMENTS
FLAME AUTO EXTINGUISH	94-V0 - File# E188111
OPERATION TEMPERATURE:	-40°C TO +85°C
INSERTION/EXTRACTION LIFE:	1000 CYCLES
CONTACT RESISTANCE:	10 MILLOHMS MAX.
CURRENT/VOLTAGE:	30 VAC/42 VDC AT 1.5 AMPS
(RoHS COMPLIANT)	* FORMER COMPLIANCE, FCC PART 68.500

PART NO. = 111S08080028L34

- PRODUCT LINE: 111
- SERIES: 111
- SHIELD DESIGNATION: S
- SIZE: 08
- # CONTACTS: 08
- OPENING: 0
- KEY: 0
- SPECIAL: 28
- LOAD BAR INCLUDED: L
- CONTACT/PLATING: 34

SD300047 RECOMMENDED HAND TOOL FROM SENTINEL = (900000/900208-1) OR (900005/900216-1)

4/17/12 C3
6/29/10 C2
1/13/10 C1

Detailed Specifications & Technical Data

METRIC MEASUREMENT VERSION

7929A Multi-Conductor - Category 5e DataTuff® Twisted Pair Cable

For more Information please call

1-800-Belden1

General Description:

24 AWG Bonded-Pairs solid bare copper conductors, polyolefin insulation, overall Beldfoil® shield (100% coverage), industrial grade sunlight- and oil-resistant PVC jacket, drain wire, rip cord. Sequential marking at two foot intervals

Usage (Overall)

Suitable Applications: Industrial Ethernet Cable, Harsh Environments, 200MHz Category 5e, Industrial Ethernet, Gigabit Ethernet, 100BaseTX, 100BaseVG ANYLAN, 155ATM, 622ATM, NTSC/PAL Component or Composite Video, AES/EBU Digital Audio, AES51, RS-422, Noisy Environments, CMX - Outdoor, RJ-45 Compatible*

Physical Characteristics (Overall)

Conductor

AWG:

# Pairs	AWG	Stranding	Conductor Material
4	24	Solid	BC - Bare Copper

Total Number of Conductors: 8

Insulation

Insulation Material:

Insulation Material	Wall Thickness (mm)	Dia. (mm)
PO - Polyolefin	0.254	1.118

Outer Shield

Outer Shield Material:

Outer Shield Trade Name	Type	Outer Shield Material	Coverage (%)
Beldfoil®	Tape	Aluminum Foil-Polyester Tape	100

Outer Shield Drain Wire AWG:

AWG	Stranding	Drain Wire Conductor Material
24	7x32	TC - Tinned Copper

Outer Jacket

Outer Jacket Material:

Outer Jacket Material	Nom. Wall Thickness (mm)
Industrial Grade PVC - Polyvinyl Chloride	0.762

Outer Jacket Ripcord: No

Overall Cable

Overall Nominal Diameter: 6.731 mm

Pair

Pair Color Code Chart:

Number	Color
1	White/Blue Stripe & Blue
2	White/Orange Stripe & Orange
3	White/Green Stripe & Green
4	White/Brown Stripe & Brown

Mechanical Characteristics (Overall)

Storage Temperature Range:	-40°C To +80°C
Installation Temperature Range:	-25°C To +75°C
Operating Temperature Range:	-40°C To +75°C
Bulk Cable Weight:	47.622 Kg/Km
Max. Recommended Pulling Tension:	177.928 N
Min. Bend Radius/Minor Axis:	12.700 mm

7929A Multi-Conductor - Category 5e DataTuff® Twisted Pair Cable

Applicable Specifications and Agency Compliance (Overall)

Applicable Standards & Environmental Programs

NEC/(UL) Specification:	CMR, CMX-Outdoor
CEC/C(UL) Specification:	CMR
EU Directive 2011/65/EU (ROHS II):	Yes
EU Directive 2000/53/EC (ELV):	Yes
EU Directive 2002/95/EC (RoHS):	Yes
EU RoHS Compliance Date (mm/dd/yyyy):	01/01/2004
EU Directive 2002/96/EC (WEEE):	Yes
EU Directive 2003/11/EC (BFR):	Yes
CA Prop 65 (CJ for Wire & Cable):	Yes
MII Order #39 (China RoHS):	Yes
PMSHA Specification:	P-07-KA060003
Telecommunications Standards:	Category 5e - TIA 568.C.2
Other Specification:	NEMA WC-63.1 Category 5e, UL verified to Category 5e

Applicable Patents:

Country
www.belden.com/p

Flame Test

UL Flame Test:	UL1666 Vertical Riser
CSA Flame Test:	FT4
IEEE Flame Test:	1202

Suitability

Suitability - Outdoor:	Yes
Sunlight Resistance:	Yes
Oil Resistance:	Yes

Plenum/Non-Plenum

Plenum (Y/N):	No

Electrical Characteristics (Overall)

Nom. Mutual Capacitance:

Capacitance (pF/m)
49.215

Maximum Capacitance Unbalance (pF/100 m):	330

Nominal Velocity of Propagation:

VP (%)
70

Maximum Delay:

Delay (ns/100 m)
538 @ 100MHz

Max. Delay Skew:

Delay Skew (ns/100 m)
45

Maximum Conductor DC Resistance:

DCR @ 20°C (Ohm/100 m)
9.38

Max. Operating Voltage - UL:

Voltage
300 V RMS

Maximum DCR Unbalanced:

DCR Unbalance @ 20°C (%)
3

Electrical Characteristics-Premise (Overall)

Premise Cable Electrical Table 1:

Freq. (MHz)	Max. Attenuation (dB/100 m)	Min. NEXT (dB)	Min. PSNEXT (dB)	Min. ACR (dB)	Min. PSACR (dB)	Min RL (dB)	Min. SRL (dB)

1	2.0	65.3	62.3	63.0	60.0	20.0	23
4	4.1	56.3	53.3	51.0	49.0	23.0	23.0
8	5.8	51.8	48.8	46.0	43.0	24.5	24.5
10	6.5	50.3	47.3	43.0	41.0	25.0	25.0
16	8.2	47.3	44.3	39.0	36.0	25.0	25.0
20	9.3	45.8	42.8	36.5	33.5	25.0	25.0
25	10.4	44.3	41.3	33.9	30.9	24.3	24.3
31.25	11.7	42.9	39.9	31.0	28.0	23.6	23.6
62.5	17.0	38.4	35.4	22.0	19.0	21.5	21.5
100	22.0	35.3	32.3	14.0	11.0	20.1	20.1
200	32.4		27.8		1.0		15.0

Premise Cable Electrical Table 2:

Freq. (MHz)	Input (Unfitted) Imp. (Ohms)	Fitted Impedance	Min. ELFEXT (dB)	Min. PSELFEXT (dB)
1	100 ± 15	100 ± 15	63.8	60.8
4	100 ± 15	100 ± 15	51.7	48.7
8	100 ± 15	100 ± 15	45.7	42.7
10	100 ± 15	100 ± 15	43.8	40.8
16	100 ± 15	100 ± 15	39.7	36.7
20	100 ± 15	100 ± 15	37.7	34.7
25	100 ± 15	100 ± 15	35.8	32.8
31.25	100 ± 15	100 ± 15	33.9	30.9
62.5	100 ± 15	100 ± 15	27.8	24.8
100	100 ± 15	100 ± 15	23.8	20.8
200	100 ± 25			14.7

Notes (Overall)

Notes: Operating temperatures are subject to length de-rating. Cable passes -40C Cold Bend per UL 1581. *Special RJ45 plug required. See WWW. BELDEN.COM - Tools - Connector Cross Reference.

Put Ups and Colors:

Item #	Putup	Ship Weight	Color	Notes	Item Desc
7929A 0021000	305 MT	16.783 KG	RED	C	4 PR #24 PP FS PVC
7929A 0061000	305 MT	16.783 KG	BLUE, LIGHT	C	4 PR #24 PP FS PVC
7929A 0081000	305 MT	16.783 KG	GRAY	C	4 PR #24 PP FS PVC
7929A 0101000	305 MT	16.783 KG	BLACK	C	4 PR #24 PP FS PVC
7929A 0102000	610 MT	31.752 KG	BLACK	C	4 PR #24 PP FS PVC
7929A 0105000	1,524 MT	77.111 KG	BLACK	C	4 PR #24 PP FS PVC
7929A 1NH1000	305 MT	16.783 KG	TEAL 1NH	C	4 PR #24 PP FS PVC

Notes:
C = CRATE REEL PUT-UP.

Revision Number: 9 Revision Date: 05-30-2014

© 2014 Belden, Inc
All Rights Reserved.

Although Belden makes every reasonable effort to ensure their accuracy at the time of this publication, information and specifications described herein are subject to error or omission and to change without notice, and the listing of such information and specifications does not ensure product availability.
Belden provides the information and specifications herein on an "AS IS" basis, with no representations or warranties, whether express, statutory or implied. In no event will Belden be liable for any damages (including consequential, indirect, incidental, special, punitive, or exemplary damages) whatsoever, even if Belden has been advised of the possibility of such damages, whether in an action under contract, negligence or any other theory, arising out of or in connection with the use, or inability to use, the information or specifications described herein.
All sales of Belden products are subject to Belden's standard terms and conditions of sale.
Belden believes this product to be in compliance with EU RoHS (Directive 2002/95/EC, 27-Jan-2003). Material manufactured prior to the compliance date may be in stock at Belden facilities and in our Distributor's inventory. The information provided in this Product Disclosure, and the identification of materials listed as reportable or restricted within the Product Disclosure, is correct to the best of Belden's knowledge, information, and belief at the date of its publication. The information provided in this Product Disclosure is designed only as a general guide for the safe handling, storage, and any other operation of the product itself or the one that it becomes a part of. This Product Disclosure is not to be considered a warranty or quality specification. Regulatory information is for guidance purposes only. Product users are responsible for determining the applicability of legislation and regulations based on their individual usage of the product.

APPENDIX B-1
Bid Form
Tri Delta Transit Site Preparation

The undersigned Bidder agrees they will contract with MTC to provide all necessary labor, supervision, machinery, tools, apparatus and other means to do all the work and furnish all the materials specified in the contract in the manner and time therein prescribed, and that they will take in full payment the amount set forth hereon.

The cost of all labor and equipment necessary for the completion of the work, even though not shown or specified, shall be included in the price shown hereon.

The award, if an award is made, will be to the responsible Bidder submitting the lowest responsive bid for all bid items combined, as indicated on Line #11 below.

Bid Detail

Line #	Task	Location	Responsible Party	Description Summary	Pricing
1.	Provide 5 or 10 RU in rack	Server Room (Labeled Telephone Room)	Tri Delta Transit	Appendix A-1, Section 3.1	N/A
2.	Provide Power to Rack	Inside cabinet or on frame	BIDDER	Appendix A-1, Section 3.1.2	$_____
3.	Provide Network to Rack	Between MPOE and Rack	Tri Delta Transit	Appendix A-1, Section 3.1.3	N/A
4.	Provide Network to Wireless Access Point at Location #1 and #2	From rack to mounting locations	BIDDER	Appendix A-1, Section 3.2.1	$_____
5.	Provide Wireless Access Point Mount at Location #1	As shown in master	BIDDER	Appendix A-1, Section 3.2.3	$_____
6.	Provide Wireless Access Point Mount at Location #2	As shown in master document	BIDDER	Appendix A-1, Section 3.2.3	$_____
7.	Provide antenna mounting frames at Locations #1 and #2	On each of 2 pipes above	BIDDER	Appendix A-1, Section 3.3.1	$_____
8.	Provide Power for TOT	Within 2 ft. of TOT location	BIDDER	Appendix A-1, Section 3.5.1	$_____
9.	Provide Network to TOT	From rack to TOT	BIDDER	Appendix A-1, Section 3.5.2	$_____
10.	Provide Analog Phone Line for TOT	Within 6ft. of TOT location	BIDDER	Appendix A-1, Section 3.5.3	$_____

Total Price

11.	Provide all work to perform Bus Yard Site Preparation Services at Tri Delta Transit, located at 801 Wilbur Ave, Antioch, CA 94509 as per this IFB, dated February 26, 2015, and any subsequent Addenda.	$_____*

*Includes all costs (to provide services listed in Appendix A-1, Scope of Work and Specifications (Tri Delta Transit, and all labor, materials, equipment, shipping, disposal fees and all applicable surcharges such as taxes, shipping, permit/license, other disposal, travel, insurance, overhead and profit, indirect and direct fees, etc. in accordance with the IFB.)

Materials and parts shall be reimbursed at cost.

MINIMUM QUALIFICATIONS:	**Yes**		**No**
Has your company been regularly engaged in the business of providing similar services for at least one (1) year?			
Does your company have a sufficient number of qualified employees to guarantee prompt, efficient work?			
Does your company possess a current and active contractor's license to perform the type of work requested? If yes, list license #_____.			
Has your company performed successfully, within the last five (5) years, at least five (5) projects of similar nature to the services described herein?			
Did a representative of your firm attend the mandatory, pre-bid site walk through?			
Has your company and any subcontractors registered with the Department of Industrial Relations pursuant to Section 1725.5 of the Labor Code? If not, describe exception here: _____ _____			

AFFIDAVIT & SIGNATURE OF AUTHORIZING OFFICIAL

Name of Proposing Company	
Address	
City, State, Zip	
Phone Number	
Email Address	
By signing below you acknowledge and agree to provide the required services, and comply with all the terms and conditions (including all applicable insurance and bonding requirements) listed in this IFB.	
Name of Authorizing Official	
Signature	
Date	

APPENDIX B-2
Bid Form
The County Connection
2477 Arnold Industrial Way, Concord, CA 94520

The undersigned Bidder agrees they will contract with MTC to provide all necessary labor, supervision, machinery, tools, apparatus and other means to do all the work and furnish all the materials specified in the contract in the manner and time therein prescribed, and that they will take in full payment the amount set forth hereon.

The cost of all labor and equipment necessary for the completion of the work, even though not shown or specified, shall be included in the price shown hereon.

The award, if an award is made, will be to the responsible Bidder submitting the lowest responsive bid for all bid items combined, as indicated on Line #11 below.

Bid Total

Line #	Task	Location	Responsible Party	Description Summary	Bid Pricing
1.	Provide 5 or 10 RU in rack	Server Room	County Connection	Appendix A-2, Section 3.1	N/A
2.	Provide Power to Rack	Inside cabinet or on frame	BIDDER	Appendix A-2, Section 3.1.2	$_____
3.	Provide Network to Rack	Between MPOE and Rack	County Connection	Appendix A-2, Section 3.1.3	N/A
4.	Provide Network to Wireless Access Point at Location #1 and #2	From rack to mounting locations	BIDDER	Appendix A-2, Section 3.2.1	$_____
5.	Provide Wireless Access Point Mount at Location #1	As shown in master document	BIDDER	Appendix A-2, Section 3.2.3	$_____
6.	Provide Wireless Access Point Mount at Location #2	As shown in master document	BIDDER	Appendix A-2, Section 3.2.3	$_____
7.	Provide antenna mounting frames at Locations #1 and #2	On each of 2 pipes above	BIDDER	Appendix A-2, Section 3.3.1	$_____
8.	Provide Power for TOT	Within 2 ft. of TOT location	BIDDER	Appendix A-2, Section 3.4.1	$_____
9.	Provide Network to TOT	From rack to TOT	BIDDER	Appendix A-2, Section 3.4.2	$_____
10.	Provide Analog Phone Line for TOT	Within 6ft. of TOT location	BIDDER	Appendix A-2, Section 3.4.3	$_____

Total Price

11.	Provide all work to perform Bus Yard Site Preparation Services at County Connection, located at 2477 Arnold Industrial Way, Concord, CA 94520 as per this IFB, dated February 26, 2015, and any subsequent Addenda.	$_____*

*Includes all costs (to provide services listed in Appendix A-2, Scope of Work and Specifications (The County Connection), and all labor, materials, equipment, shipping, disposal fees and all applicable surcharges such as taxes, shipping, permit/license, other disposal, travel, insurance, overhead and profit, indirect and direct fees, etc. in accordance with the IFB.)

Materials and parts shall be reimbursed at cost.

	MINIMUM QUALIFICATIONS:	**Yes**		**No**
	Has your company been regularly engaged in the business of providing similar services for at least one (1) year?			
	Does your company have a sufficient number of qualified employees to guarantee prompt, efficient work?			
	Does your company possess a current and active contractor's license to perform the type of work requested? If yes, list license #_____.			
	Has your company performed successfully, within the last five (5) years, at least five (5) projects of similar nature to the services described herein?			
	Did a representative of your firm attend the mandatory, pre-bid site walk through?			
	Has your company and any subcontractors registered with the Department of Industrial Relations pursuant to Section 1725.5 of the Labor Code? If not, describe exception here: _____ _____			

AFFIDAVIT & SIGNATURE OF AUTHORIZING OFFICIAL

Name of Proposing Company	
Address	
City, State, Zip	
Phone Number	
Email Address	
By signing below you acknowledge and agree to provide the required services, and comply with all the terms and conditions (including all applicable insurance and bonding requirements) listed in this IFB.	
Name of Authorizing Official	
Signature	
Date	

APPENDIX B-3
Bid Form
WestCat Site Preparation
601 Walter Ave., Pinole, CA 94564

The undersigned Bidder agrees they will contract with MTC to provide all necessary labor, supervision, machinery, tools, apparatus and other means to do all the work and furnish all the materials specified in the contract in the manner and time therein prescribed, and that they will take in full payment the amount set forth hereon.

The cost of all labor and equipment necessary for the completion of the work, even though not shown or specified, shall be included in the price shown hereon.

The award, if an award is made, will be to the responsible Bidder submitting the lowest responsive bid for all bid items combined, as indicated on Line #10 below.

Bid Detail

Line #	**Task**	**Location**	**Responsible Party**	**Description Summary**	**Pricing**
1.	Provide 6 or 11 RU in rack	Server Room	WestCat	Appendix A-3, Section 3.1	N/A
2.	Provide Power to Rack	Inside cabinet or on frame	WestCat	Appendix A-3, Section 3.1.2	N/A
3.	Provide Network to Rack	Inside cabinet or on frame	WestCat	Appendix A-3, Section 3.1.3	N/A
4.	Provide Network to Wireless Access Point	From rack to mounting locations	BIDDER	Appendix A-3, Section 3.2.1	$_____
5.	Provide Wireless Access Point Mounting	South-East corner of building	BIDDER	Appendix A-3, Section 3.2.3	$_____
6.	Provide antenna mounting frames at Locations #1 and #2	On pipe above	BIDDER	Appendix A-3, Section 3.3.1	$_____
7.	Provide Power for TOT	Within 2 ft. of TOT location	BIDDER	Appendix A-3, Section 3.4.1	$_____
8.	Provide Network to TOT	From rack to TOT	BIDDER	Appendix A-3, Section 3.4.2	$_____
9.	Provide Analog Phone Line for TOT	Within 6ft. of TOT location	BIDDER	Appendix A-3, Section 3.4.3	$_____

Total Price

10.	Provide all work to perform Bus Yard Site Preparation Services at WestCat Transit, located at 601 Walter Ave, Pinole, CA 94564 as per this IFB, dated February 26, 2015, and any subsequent Addenda.	$_____*

*Includes all costs (to provide services listed in Appendix A-3, Scope of Work and Specifications (WestCat), and all labor, materials, equipment, shipping, disposal fees and all applicable surcharges such as taxes, shipping, permit/license, other disposal, travel, insurance, overhead and profit, indirect and direct fees, etc. in accordance with the IFB.)

Materials and parts shall be reimbursed at cost.

MINIMUM QUALIFICATIONS:	**Yes**		**No**
Has your company been regularly engaged in the business of providing similar services for at least one (1) year?			
Does your company have a sufficient number of qualified employees to guarantee prompt, efficient work?			
Does your company possess a current and active contractor's license to perform the type of work requested? If yes, list license #_____.			
Has your company performed successfully, within the last five (5) years, at least five (5) projects of similar nature to the services described herein?			
Did a representative of your firm attend the mandatory, pre-bid site walk through?			
Has your company and any subcontractors registered with the Department of Industrial Relations pursuant to Section 1725.5 of the Labor Code? If not, describe exception here: _____ _____			

AFFIDAVIT & SIGNATURE OF AUTHORIZING OFFICIAL

Name of Proposing Company	
Address	
City, State, Zip	
Phone Number	
Email Address	
By signing below you acknowledge and agree to provide the required services, and comply with all the terms and conditions (including all applicable insurance and bonding requirements) listed in this IFB.	
Name of Authorizing Official	
Signature	
Date	

APPENDIX B-4

Bid Form
Livermore-Amador Valley Transit Authority Site Preparation
1) 1362 Rutan Ct., Livermore, CA 94551
2) 2500 Railroad Ave., Livermore, CA 94550

The undersigned Bidder agrees they will contract with MTC to provide all necessary labor, supervision, machinery, tools, apparatus and other means to do all the work and furnish all the materials specified in the contract in the manner and time therein prescribed, and that they will take in full payment the amount set forth hereon.

The cost of all labor and equipment necessary for the completion of the work, even though not shown or specified, shall be included in the price shown hereon. The award, if an award is made, will be to the responsible Bidder submitting the lowest responsive bid for all bid items combined, as indicated on Line #15 below.

Bid Detail

Line #	Task	Location	Responsible Party	Description Summary	Pricing
1.	Provide 5 or 10 RU in rack	Rutan - Server Room	Livermore Transit	Appendix A-4, Section 3.1	N/A
2.	Provide Power to Rack	Rutan - Inside cabinet or on frame	BIDDER	Appendix A-4, Section 3.1.2	$_____
3.	Provide Network to Rack	Rutan - Between MPOE and Rack	Livermore Transit	Appendix A-4, Section 3.1.3	N/A
4.	Provide Network to Wireless Access Point at Location #1 and #2	Rutan - From rack to mounting locations	BIDDER	Appendix A-4, Section 3.2.1	$_____
5.	Provide Wireless Access Point Mount at Location #1	Rutan - As shown in master document	BIDDER	Appendix A-4, Section 3.2.3	$_____
6.	Provide Wireless Access Point Mounting Frame at Location #2	Rutan - As shown in master document	BIDDER	Appendix A-4, Section 3.2.3	$_____
7.	Provide antenna mounting frames at Location.	Rutan - On pipe above	BIDDER	Appendix A-4, Section 3.3.1	$_____
8.	Provide Power for TOT	Rutan - Within 2 ft. of TOT location	BIDDER	Appendix A-4, Section 3.4.1	$_____
9.	Provide Network to TOT	Rutan - From rack to TOT	BIDDER	Appendix A-4, Section 3.4.2	$_____
10.	Provide Analog Phone Line for TOT	Rutan - Within 6ft. of TOT location	BIDDER	Appendix A-4, Section 3.4.3	$_____

11.	Provide Power for TOT	Transit Center - Within 2 ft. of TOT location	BIDDER	Appendix A-4, Section 4.2.2	$_____
12.	Provide Network to TOT	Transit Center - From Switch to TOT if not in close proximity	BIDDER	Appendix A-4, Section 4.2.2	$_____
13.	Provide Analog Phone Line for TOT	Transit Center - Within 6ft. of TOT location	BIDDER	Appendix A-4, Section 4.2.2	$_____
14.	Provide Power for Switch	Transit Center - Within 2 ft. of Switch Location	BIDDER	Appendix A-4, Section 4.2.2	$_____

Total Price

15.	Provide all work to perform Site Preparation Services at the Wheels Bus Yard, located at 1362 Rutan Ct., Livermore, CA 94551 and at the Wheels Transit Center, located at 2500 Railroad Ave, Livermore, CA 94550, as per this IFB, dated February 26, 2015, and any subsequent Addenda.	$_____*

*Includes all costs (to provide services listed in Appendix A-4, Scope of Work and Specifications (LAVTA), and all labor, materials, equipment, shipping, disposal fees and all applicable surcharges such as taxes, shipping, permit/license, other disposal, travel, insurance, overhead and profit, indirect and direct fees, etc. in accordance with the IFB.)

Materials and parts shall be reimbursed at cost.

MINIMUM QUALIFICATIONS:	**Yes**		**No**
Has your company been regularly engaged in the business of providing similar services for at least one (1) year?			
Does your company have a sufficient number of qualified employees to guarantee prompt, efficient work?			
Does your company possess a current and active contractor's license to perform the type of work requested? If yes, list license #_____.			
Has your company performed successfully, within the last five (5) years, at least five (5) projects of similar nature to the services described herein?			
Did a representative of your firm attend the mandatory, pre-bid site walk through?			
Has your company and any subcontractors registered with the Department of Industrial Relations pursuant to Section 1725.5 of the Labor Code? If not, describe exception here: _____ _____			

AFFIDAVIT & SIGNATURE OF AUTHORIZING OFFICIAL

Name of Proposing Company	
Address	
City, State, Zip	
Phone Number	
Email Address	
By signing below you acknowledge and agree to provide the required services, and comply with all the terms and conditions (including all applicable insurance and bonding requirements) listed in this IFB.	
Name of Authorizing Official	
Signature	
Date	

APPENDIX B-5
Bid Form
Livermore-Amador Valley Transit Authority Site Preparation
875 Atlantis Ct., Livermore, CA 94551

The undersigned Bidder agrees they will contract with MTC to provide all necessary labor, supervision, machinery, tools, apparatus and other means to do all the work and furnish all the materials specified in the contract in the manner and time therein prescribed, and that they will take in full payment the amount set forth hereon.

The cost of all labor and equipment necessary for the completion of the work, even though not shown or specified, shall be included in the price shown hereon.

The award, if an award is made, will be to the responsible Bidder submitting the lowest responsive bid for all bid items combined, as indicated on Line #9 below.

Bid Detail

Line #	Task	Location	Responsible Party	Description Summary	Pricing
1.	Provide 5 RU or 10 RU in Rack	Server Room	Livermore Transit	Appendix A-5, Section 3.1	N/A
2.	Provide Power to Rack	Inside cabinet or on frame	Bidder	Appendix A-5, Section 3.1.2	$_____
3.	Provide Network to Rack	Between MPOE and Rack	Livermore Transit	Appendix A-5, Section 3.1.3	N/A
4.	Provide Network to Wireless Access Point at Location #1, #2, and #3.	From rack to mounting locations	Bidder	Appendix A-5, Section 3.2.1	$_____
5.	Provide Wireless Access Point Mount at Location #1	As shown in master document	Bidder	Appendix A-5, Section 3.2.3	$_____
6.	Provide Wireless Access Point Mount at Location #2	As shown in master document	Bidder	Appendix A-5, Section 3.2.3	$_____
7.	Provide antenna mounting frames at Locations #1 and #2	On each of 2 pipes above	Bidder	Appendix A-5, Section 3.3.1	$_____
8.	Provide Wireless Access Point Mounting Frame at Location #3	As shown in master document	Bidder	Appendix A-5, Section 3.4.1	$_____

Total Price

9.	Provide all work to perform Bus Yard Site Preparation Services at the Wheels Bus Yard, located at 875 Atlantis Ct., Livermore, CA 94551 as per this IFB, dated February 26, 2015, and any subsequent Addenda.	$_____*

*Includes all costs (to provide services listed in Appendix A-5, Scope of Work and Specifications (LAVTA Atlantis), and all labor, materials, equipment, shipping, disposal fees and all applicable surcharges such as taxes, shipping, permit/license, other disposal, travel, insurance, overhead and profit, indirect and direct fees, etc. in accordance with this IFB.)

Materials and parts shall be reimbursed at cost.

MINIMUM QUALIFICATIONS:	**Yes**		**No**
Has your company been regularly engaged in the business of providing similar services for at least one (1) year?			
Does your company have a sufficient number of qualified employees to guarantee prompt, efficient work?			
Does your company possess a current and active contractor's license to perform the type of work requested? If yes, list license #_____.			
Has your company performed successfully, within the last five (5) years, at least five (5) projects of similar nature to the services described herein?			
Did a representative of your firm attend the mandatory, pre-bid site walk through?			
Has your company and any subcontractors registered with the Department of Industrial Relations pursuant to Section 1725.5 of the Labor Code? If not, describe exception here: _____ _____			

AFFIDAVIT & SIGNATURE OF AUTHORIZING OFFICIAL

Name of Proposing Company	
Address	
City, State, Zip	
Phone Number	
Email Address	
By signing below you acknowledge and agree to provide the required services, and comply with all the terms and conditions (including all applicable insurance and bonding requirements) listed in this IFB.	
Name of Authorizing Official	
Signature	
Date	

APPENDIX C
REFERENCE FORM

Name of Bidding Company _____

Representative Name & Title _____

Phone Number _____

References must not be relatives of the Bidder's representatives or owners. References must not be a relative of the Contractor's representative or owners. The references given must be for clients with projects completed within the last five (5) years that are similar in nature to the applicable Project described in *Appendices A-1, A-2, A-3, A-4, and/or A-5*, Scope of Work and Specifications, as applicable. Only those references listed below shall be contacted. It is the Bidder's sole responsibility to list reliable and responsive references.

Contractor's References (Provide 3 clients)

1. Client's Name _____
Service Provided _____
Contact Person/Title _____
Address _____
City & Zip Code _____
Phone Number & Email _____

2. Client's Name _____
Service Provided _____
Contact Person/Title _____
Address _____
City & Zip Code _____
Phone Number & Email _____

3. Client's Name _____
Services Provided _____
Contact Person/Title _____
Address _____
City & Zip Code _____
Phone Number & Email _____

APPENDIX D
SUBCONTRACTORS FORM

List ALL Subcontractors who Bidder expects to perform work on this project in excess of ½ of 1% of the total bid price or $10,000, whichever is greater.

1. Name of Subcontractor _____

   Representative Name & Title_____

   Phone No. _____

   Work to Be Performed_____

   _____

   _____

2. Name of Subcontractor _____

   Representative Name & Title_____

   Phone No. _____

   Work to Be Performed_____

   _____

   _____

3. Name of Subcontractor _____

   Representative Name & Title_____

   Phone No. _____

   Work to Be Performed_____

   _____

   _____

APPENDIX E
GENERAL CONDITIONS FOR PURCHASE ORDERS

1. DEFINITIONS

a. MTC. Includes the Metropolitan Transportation Commission, the Metropolitan Transportation Commission Service Authority for Freeways and Expressways, or the Bay Area Toll Authority.

b. Supplier. The individual, firm, partnership, corporation or combination thereof to whom a Purchase Order is mailed or otherwise furnished by MTC.

c. Contract. The legal agreement between MTC and the Supplier, which includes the terms of any written solicitation of Bids or Proposals and any deviation from the written specifications expressly accepted by MTC; the Supplier's bid, proposal, or offer; and all terms and conditions set forth in or attached to this Purchase Order. In the event of a conflict between one or more provisions of the Contract, the more specific or stringent provision with respect to Supplier's performance of the work shall apply.

2. ACCEPTANCE OF OFFER

This purchase order constitutes MTC's acceptance of Supplier's offer and becomes a binding contract, as defined above, when it is signed by MTC and mailed to Supplier. No revisions to or assignments of this order shall be valid unless in writing and signed by an authorized representative of MTC.

3. PERFORMANCE OF WORK

Supplier shall accomplish all the work and furnish all materials necessary for the completion of the work in a good, workmanlike and thorough manner and to the satisfaction of MTC, in accordance with the Contract.

4. CONTRACT PRICE

The firm fixed price(s) or other maximum payment set out in this purchase order, which includes full compensation to Supplier for performing all work required by the Contract, including all applicable federal, state and local taxes.

5. VARIATION IN QUANTITY, QUALITY OR PERFORMANCE

Any variation in the quantity, quality or performance of any item or service called for by this order shall be grounds for termination by default by MTC, as provided in 8a, unless approved by MTC in writing.

6. PACKAGING AND CRATING

All items shall be packed by Supplier in suitable containers for protection in shipment and storage. Prices set forth in this order include all charges for Supplier's packing, crating and marking for transportation to f.o.b. point.

7 INSPECTION AND ACCEPTANCE

Inspection and acceptance will be at destination, unless otherwise provided. Until delivery and acceptance, and after any rejections, risk of loss will be on the Supplier.

8. TERMINATION

a. If Supplier fails to comply with any of the provisions of the Contract, or in the event Supplier becomes the subject of a proceeding under state or federal law for relief of creditors, or if Supplier makes an assignment for the benefit of creditors, MTC shall have the right to hold Supplier in default and cancel this order in whole or in part. In each event, MTC may obtain the items covered by the cancelled order from another Supplier and, if Supplier was selected as a result of a competitive procurement process, Supplier shall reimburse MTC for the excess cost to MTC, if any.

b. Without affecting its right to cancel this order under paragraph (a) above, MTC may terminate this order in whole or in part prior to shipment of goods or provision of services at no cost by providing written notice to the Supplier. In such event, MTC shall reimburse Supplier for non-recoverable costs incurred to date, not to exceed the Contract Price.

9. SCHEDULE

Unless otherwise agreed, material commitments and production arrangements should not be made by Supplier in excess of the amount or in advance of the time necessary to meet the specified delivery schedule. Time is of the essence in filling this order, and it is Supplier's responsibility to comply with MTC's delivery directions and/or schedule. Failure to deliver any item or provide any service called for by the contract within the time called for shall be grounds for termination for default as provided in 8.a.

10. INDEMNIFICATION

Supplier shall indemnify, defend and hold harmless MTC and its commissioners, directors, officers, agents, and employees from and against all claims, demands, suits, loss, damage, injury and liability (including any and all costs and expenses incurred in connection therewith) incurred by reason of any negligent or otherwise wrongful act or omission of Supplier in connection with Supplier's performance of the Contract, including delivery of materials or equipment to MTC at the time and point of delivery indicated when delivery is an obligation of Supplier under the Contract.

11. INDEPENDENT CONTRACTOR

Supplier is an independent contractor and not an employee or agent of MTC.

12. PAYMENT

Supplier shall submit an invoice to MTC within thirty days after completion of work, unless otherwise specified in purchase order. MTC will pay invoices no later than thirty (30) days after their receipt conditioned upon approval of work done and amount billed. Electronic copies of invoices shall be sent to MTC to the following e-mail address: acctpay@mtc.ca.gov. Invoices in writing shall be delivered or mailed to MTC as follows:
Accounts Payable, MTC
Joseph P. Bort MetroCenter
101 8th Street
Oakland, CA 94607-4700.

SUPPLEMENTAL GENERAL CONDITIONS FOR PURCHASE ORDERS

Additional Requirements for MTC Suppliers, Contractors

13. Insurance Requirement: Supplier agrees to obtain and maintain at its own expense for the duration of the Agreement the following types of insurance against claims, damages or losses arising in connection with the performance of the Agreement, placed with insurers with a Best's rating of A-VIII or better:

(1) Worker's Compensation Insurance with Statutory limits, and Employer's Liability insurance with a limit of not less than $1,000,000 per employee and $1,000,000 per accident, and any and all other coverage of CONTRACTOR's employees as may be required by applicable law. Such policy shall contain a Waiver of Subrogation in favor of MTC. Such Workers Compensation & Employers Liability may be waived, if and only for as long as CONTRACTOR is a sole proprietor or a corporation with stock 100% owned by officers with no employees.

;

(2) Commercial General Liability Insurance for Bodily Injury and Property Damage liability, covering the operations of CONTRACTOR and CONTRACTOR's officers, agents, and employees and with limits of liability which shall not be less than $1,000,000 combined single limit per occurrence with a general aggregate liability of not less than $2,000,000, and Personal & Advertising Injury liability with a limit of not less than $1,000,000. Such policy shall contain a Waiver of Subrogation in favor of MTC.

MTC and those entities listed in Section I of this Appendix G, and their commissioners, directors, officers, representatives, agents and employees are to be named as additional insureds. Such insurance shall be primary and contain a Separation of Insureds Clause as respects any claims, losses or liability arising directly or indirectly from CONTRACTOR's operations.

(3) Business Automobile Liability Insurance for all automobiles owned (if any), used or maintained by CONTRACTOR and CONTRACTOR's officers, agents and employees, including but not limited to owned (if any), leased (if any), non-owned and hired automobiles, with limits of liability which shall not be less than $1,000,000 combined single limit per accident.

(4) Umbrella insurance in the amount of $1,000,000 providing excess limits over Employers Liability, Automobile Liability, and Commercial General Liability Insurance. Such umbrella coverage shall be following form to underlying coverage including all endorsements and additional insured requirements; and

(5) Property Insurance covering CONTRACTOR's own business personal property and equipment to be used in performance of this Agreement, materials or property to be purchased and/or installed on behalf of MTC (if any). Coverage shall be written on a "Special Form" policy that includes theft, but excludes earthquake, with limits at least equal to the replacement cost of the property. Such policy shall contain a Waiver of Subrogation in favor of MTC.

Self-Insurance: CONTRACTOR's obligation hereunder may be satisfied in whole or in part by adequately funded self-insurance, upon evidence of financial capacity satisfactory to MTC.

Deductibles and Retentions: CONTRACTOR shall be responsible for payment of any deductible or retention on CONTRACTOR's policies without right of contribution from MTC. Deductible and retention provisions shall not contain any restrictions as to how or by whom the deductible or retention is paid. Any deductible or retention provision limiting payment to the Named Insured is unacceptable.

In the event that MTC seeks coverage as an additional insured under any CONTRACTOR insurance policy that contains a deductible or self-insured retention, CONTRACTOR shall satisfy such deductible or self-insured retention to the extent of loss covered by such policy, for any lawsuit arising from or connected with any alleged act of CONTRACTOR, subconsultant, subcontractor, or any of their employees, officers or directors, even if CONTRACTOR or subconsultant is not a named defendant in the lawsuit.

Claims Made Coverage: If any insurance specified above is written on a "Claims-Made" (rather than an "occurrence") basis, then in addition to the coverage requirements above, CONTRACTOR shall:

(1) Ensure that the Retroactive Date is shown on the policy, and such date must be before the date of this Agreement or the beginning of any work under this Agreement;
(2) Maintain and provide evidence of similar insurance for at least three (3) years following project completion, including the requirement of adding all additional insureds; and
(3) If insurance is cancelled or non-renewed, and not replaced with another claims-made policy form with a Retroactive Date prior to the Agreement effective date, CONTRACTOR shall purchase "extended reporting" coverage for a minimum of three (3) years after completion of the work.

Failure to Maintain Insurance: All insurance specified above shall remain in force until all work or services to be performed are satisfactorily completed, all of CONTRACTOR's personnel, subcontractors, and equipment have been removed from MTC's property, and the work or services have been formally accepted. CONTRACTOR must notify MTC if any of the above required coverages are non-renewed or cancelled. The failure to procure or maintain required insurance and/or an adequately funded self-insurance program will constitute a material breach of this Agreement.

Certificates of Insurance: Prior to commencement of any work hereunder, CONTRACTOR shall deliver to MTC Certificates of Insurance verifying the aforementioned coverages. Such certificates shall make reference to all provisions and endorsements referred to above and shall be signed on behalf of the insurer by an authorized representative thereof.

Disclaimer: The foregoing requirements as to the types and limits of insurance coverage to be maintained by CONTRACTOR are not intended to and shall not in any manner limit or qualify the liabilities and obligations otherwise assumed by CONTRACTOR pursuant hereto, including, but not limited to, liability assumed pursuant to Indemnification of the Agreement.

Additional Insureds: The following entities are to be named as Additional Insureds, as applicable by project, under applicable sections of insurance and as MTC Indemnified Parties, pursuant to Indemnification of the Agreement.

- Metropolitan Transportation Commission
- For Appendix B-1: Tri Delta Transit
- For Appendix B-2: The County Connection
- For Appendix B-3: WestCat
- For Appendix B-4: Livermore Amador Valley Transportation Authority
- For Appendix B-5: Livermore Amador Valley Transportation Authority

14. Injury Protection As part of the MTC's Injury Prevention Program (IPP) established pursuant to California Labor Code Section 6401.7, you may be required to provide the contracting agency with a description of your IPP and, specifically, of your methods and procedures for identifying and using safe conditions and work practices at the worksite while performing specified work.

15. Responsibility of Suppliers and Contractors: You shall be solely responsible for any and all of the work done by your subcontractors or employees, and all orders or instruction from MTC shall be through you to them. You shall ensure that subcontractor and employees commence their work promptly at the agreed-upon time and carry it on with due diligence; and that any and all damage caused by them is promptly repaired or corrected by them or you at no cost to MTC. You are solely responsible for payment of subcontracts. In no event shall MTC have any responsibility or obligation to such subcontractors.

The Contractor shall comply with Sections 7-1.02K(1), General, Section 7-1.02K(2), Wages, Section 7-1.02K(4), Apprentices, and Section 7-1.02K(5), Working Hours of the Standard Specifications. In the performance of the work specified in this Contract, you and all your subcontractors are responsible for complying with California Labor Code Sections 1776 (Payroll records, retention, inspection, noncompliance penalties, rules and regulations) and 1777.5 (Employment of registered apprentices, wages, standards, number, apprenticeable craft or trade, exemptions, contributions). MTC reserves the right to require you and all your subcontractors to furnish electronic certified payroll records directly to MTC in addition to the reporting requirement stated below. *Attachment H*, Wage Determination, is included in this IFB, and incorporated herein by this reference. For all new projects awarded on or after April 1, 2015, you and all your subcontractors must be registered with the Department of Industrial Relations pursuant to Code section 1725.5 in order to be awarded a contract and must furnish electronic certified payroll records directly to the Labor Commissioner (aka Division of Labor Standards Enforcement).

APPENDIX F
CALIFORNIA LEVINE ACT STATEMENT

California Government Code § 84308, commonly referred to as the "Levine Act," precludes an officer of a local government agency from participating in the award of a contract if he or she receives any political contributions totaling more than $250 in the 12 months preceding the pendency of the contract award, and for three months following the final decision, from the person or company awarded the contract. This prohibition applies to contributions to the officer, or received by the officer on behalf of any other officer, or on behalf of any candidate for office or on behalf of any committee.

MTC's commissioners include:

Alicia C. Aguirre	Federal D. Glover	Julie Pierce
Tom Azumbrado	Scott Haggerty	Libby Schaaf
Jason Baker	Anne W. Halsted	Bijan Sartipi
Tom Bates	Steve Kinsey	James P. Spering
David Campos	Sam Liccardo	Adrienne J. Tissier
Dave Cortese	Mark Luce	Scott Wiener
Dorene M. Giacopini	Jake Mackenzie	Amy Rein Worth

1. Have you or your company, or any agent on behalf of you or your company, made any political contributions of more than $250 to any MTC commissioner in the 12 months preceding the date of the issuance of this request for qualifications?

___ YES ___ NO

_____ If yes, please identify the commissioner:

_____

2. Do you or your company, or any agency on behalf of you or your company, anticipate or plan to make any political contributions of more than $250 to any MTC commissioners in the three months following the award of the contract?

___ YES ___ NO

_____ If yes, please identify the commissioner:

_____

Answering yes to either of the two questions above does not preclude MTC from awarding a contract to your firm. It does, however, preclude the identified commissioner(s) from participating in the contract award process for this contract.

_____ _____

DATE (SIGNATURE OF AUTHORIZED OFFICIAL)

_____

(TYPE OR WRITE APPROPRIATE NAME, TITLE)

_____

(TYPE OR WRITE NAME OF COMPANY)

APPENDIX G
INSURANCE REQUIREMENTS

Minimum Coverages. The insurance requirements specified in this section shall cover CONTRACTOR's own liability and the liability arising out of work or services performed under this Agreement by any subconsultants, subcontractors, suppliers, temporary workers, independent contractors, leased employees, or any other persons, firms or corporations that CONTRACTOR authorizes to work under this Contract (hereinafter referred to as "Agents.") CONTRACTOR shall, at its own expense, obtain and maintain in effect at all times during the life of the Contract as a result of this IFB, the following types of insurance against claims, damages and losses due to injuries to persons or damage to property or other losses that may arise in connection with the performance of work under the Contract as a result of this IFB.

CONTRACTOR is also required to assess the risks associated with work to be performed by Agents under subcontract and to include in every subcontract the requirement that the Agent maintain adequate insurance coverage with appropriate limits and endorsements to cover such risks. To the extent that an Agent does not procure and maintain such insurance coverage, CONTRACTOR shall be responsible for said coverage and assume any and all costs and expenses that may be incurred in securing said coverage or in fulfilling CONTRACTOR's indemnity obligation as to itself or any of its Agents in the absence of coverage.

In the event CONTRACTOR or its Agents procure excess or umbrella coverage to maintain certain requirements outlined below, these policies shall also satisfy all specified endorsements and stipulations, including provisions that CONTRACTOR's insurance be primary without right of contribution from MTC. Prior to beginning work under this contract as a result of this IFB, CONTRACTOR shall provide MTC with satisfactory evidence of compliance with the insurance requirements of this section.

Yes (√)	**Please certify by checking the boxes at left that required coverages will be provided within five (5) days of MTC's notice to firm that it has been selected.**
___	Workers' Compensation Insurance with Statutory limits, and Employer's Liability insurance with a limit of not less than $1,000,000 per employee and $1,000,000 per accident, and any and all other coverage of CONTRACTOR's employees as may be required by applicable law. Such policy shall contain a Waiver of Subrogation in favor of MTC. Such Workers Compensation & Employers Liability may be waived, if and only for as long as CONTRACTOR is a sole proprietor or a corporation with stock 100% owned by officers with no employees.
___	Commercial General Liability Insurance for Bodily Injury and Property Damage liability, covering the operations of CONTRACTOR and CONTRACTOR's officers, agents, and employees and with limits of liability which shall not be less than $1,000,000 combined single limit per occurrence with a general aggregate liability of not less than $2,000,000, and Personal & Advertising Injury liability with a limit of not less than $1,000,000. Such policy shall contain a Waiver of Subrogation in favor of MTC.

	MTC and those entities listed in Section I of this Appendix G, and their commissioners, directors, officers, representatives, agents and employees are to be named as additional insureds. Such insurance shall be primary and contain a Separation of Insureds Clause as respects any claims, losses or liability arising directly or indirectly from CONTRACTOR's operations.
___	Business Automobile Insurance for all automobiles owned (if any), used or maintained by CONTRACTOR and CONTRACTOR's officers, agents and employees, including but not limited to owned (if any), leased (if any), non-owned and hired automobiles, with limits of liability which shall not be less than $1,000,000 combined single limit per accident.
___	Umbrella Insurance in the amount of $1,000,000 providing excess limits over Employer's Liability, Automobile Liability, and Commercial General Liability Insurance. Such umbrella coverage shall be following form to underlying coverage including all endorsements and additional insured requirements.
___	Property Insurance covering CONTRACTOR's own business personal property and equipment to be used in performance of this Agreement, materials or property to be purchased and/or installed on behalf of MTC (if any). Coverage shall be written on a "Special Form" policy that includes theft, but excludes earthquake, with limits at least equal to the replacement cost of the property. Such policy shall contain a Waiver of Subrogation in favor of MTC.

B. Acceptable Insurers

All policies will be issued by insurers acceptable to MTC, generally with a Best's Rating of A-VIII or better.

C. Self-Insurance

CONTRACTOR's obligation hereunder may be satisfied in whole or in part by adequately funded self-insurance, upon evidence of financial capacity satisfactory to MTC.

D. Deductibles and Retentions

CONTRACTOR shall be responsible for payment of any deductible or retention on CONTRACTOR's policies without right of contribution from MTC. Deductible and retention provisions shall not contain any restrictions as to how or by whom the deductible or retention is paid. Any deductible or retention provision limiting payment to the Named Insured is unacceptable.

In the event that MTC seeks coverage as an additional insured under any CONTRACTOR insurance policy that contains a deductible or self-insured retention, CONTRACTOR shall satisfy such deductible or self-insured retention to the extent of loss covered by such policy, for any lawsuit arising from or connected with any alleged act of CONTRACTOR, subconsultant, subcontractor, or any of their employees, officers or directors, even if CONTRACTOR or subconsultant is not a named defendant in the lawsuit.

E. Claims Made Coverage

If any insurance specified above is written on a "Claims-Made" (rather than an "occurrence") basis, then in addition to the coverage requirements above, CONTRACTOR shall:

(4) Ensure that the Retroactive Date is shown on the policy, and such date must be before the date of this Agreement or the beginning of any work under this Agreement;
(5) Maintain and provide evidence of similar insurance for at least three (3) years following project completion, including the requirement of adding all additional insureds; and
(6) If insurance is cancelled or non-renewed, and not replaced with another claims-made policy form with a Retroactive Date prior to the Agreement effective date, CONTRACTOR shall purchase "extended reporting" coverage for a minimum of three (3) years after completion of the work.

F. Failure to Maintain Insurance

All insurance specified above shall remain in force until all work or services to be performed are satisfactorily completed, all of CONTRACTOR's personnel, subcontractors, and equipment have been removed from MTC's property, and the work or services have been formally accepted. CONTRACTOR must notify MTC if any of the above required coverages are non-renewed or cancelled. The failure to procure or maintain required insurance and/or an adequately funded self-insurance program will constitute a material breach of this Agreement.

G. Certificates of Insurance

Prior to commencement of any work hereunder, CONTRACTOR shall deliver to MTC Certificates of Insurance verifying the aforementioned coverages. Such certificates shall make reference to all provisions and endorsements referred to above and shall be signed on behalf of the insurer by an authorized representative thereof.

H. Disclaimer

The foregoing requirements as to the types and limits of insurance coverage to be maintained by CONTRACTOR are not intended to and shall not in any manner limit or qualify the liabilities and obligations otherwise assumed by CONTRACTOR pursuant hereto, including, but not limited to, liability assumed pursuant to Indemnification of the Agreement.

I. Additional Insureds

The following entities are to be named as Additional Insureds under applicable sections of insurance and as MTC Indemnified Parties, pursuant to Indemnification of the Agreement.

- Metropolitan Transportation Commission
- For Appendix B-1: Tri Delta Transit
- For Appendix B-2: The County Connection
- For Appendix B-3: WestCat
- For Appendix B-4: Livermore Amador Valley Transportation Authority

For Appendix B-5: Livermore Amador Valley Transportation Authority

By signing below, you acknowledge and agree to provide the required certificate of insurance providing verification of the minimum insurance requirements listed above within five (5) days of MTC's notice to firm that it is the successful Bidder.	
Representative Name and Title	
Name of Authorizing Official	
Authorized Signature	
Date	
NOTE: If you were unable to check "Yes" for any of the required minimum insurance coverages listed above, a request for exception to the appropriate insurance requirement(s) must be brought to MTC's attention no later than the date for protesting IFB provisions. If such objections are not brought to MTC's attention consistent with the protest provisions of this IFB, compliance with the insurance requirements will be assumed.	

APPENDIX H
WAGE DETERMINATION

GENERAL PREVAILING WAGE DETERMINATION MADE BY THE DIRECTOR OF INDUSTRIAL RELATIONS PURSUANT TO CALIFORNIA LABOR CODE PART 7, CHAPTER 1, ARTICLE 2, SECTIONS 1770, 1773, AND 1773.1

FOR COMMERCIAL BUILDING, HIGHWAY, HEAVY CONSTRUCTION AND DREDGING PROJECTS

CRAFT: TELECOMMUNICATIONS TECHNICIAN

DETERMINATION: C-422-X-1-2003-2
ISSUE DATE: August 22, 2003
EXPIRATION DATE OF DETERMINATION: June 1, 2004* Effective until superseded by a new determination issued by the Director of Industrial Relations. Contact the Division of Labor Statistics & Research at (415) 703-4774 for the new rates after 10 days from the expiration date, if no subsequent determination is issued.

LOCALITY: All localities within Alameda, Los Angeles, San Francisco, San Mateo, and Santa Clara Counties.

		Employer Payments				Straight-Time		Overtime Hourly Rate	
Classification (Journeyperson)	Basic Hourly Rate	Health and Welfare	Pension	Vacation and Holidays	Training	Hours	Total Hourly Rate	1 1/2X[a]	Holiday 2 1/2X
Telecommunications Technician	28.50	2.79	0.93	3.28	-	8	35.50	49.75	78.25

[a] Rate applies to work in excess of eight hours daily and for all hours over 40. Rate applies to all hours worked on Sunday.

RECOGNIZED HOLIDAYS: Holidays upon which the general prevailing hourly wage rate for Holiday work shall be paid, shall be all holidays in the collective bargaining agreement, applicable to the particular craft, classification, or type of worker employed on the project, which is on file with the Director of Industrial Relations. If the prevailing rate is not based on a collectively bargained rate, the holidays upon which the prevailing rate shall be paid shall be as provided in Section 6700 of the Government Code. You may obtain the holiday provisions for the current determinations on the Internet at http://www.dir.ca.gov/DLSR/PWD. Holiday provisions for current or superseded determinations may be obtained by contacting the Prevailing Wage Unit at (415) 703-4774.

TRAVEL AND/OR SUBSISTENCE PAYMENT: In accordance with Labor Code Sections 1773.1 and 1773.9, contractors shall make travel and/or subsistence payments to each worker to execute the work. You may obtain the travel and/or subsistence provisions for the current determinations on the Internet at http://www.dir.ca.gov/DLSR/PWD. Travel and/or subsistence requirements for current or superseded determinations may be obtained by contacting the Prevailing Wage Unit at (415) 703-4774.

GENERAL PREVAILING WAGE DETERMINATION MADE BY THE DIRECTOR OF INDUSTRIAL RELATIONS PURSUANT TO CALIFORNIA LABOR CODE PART 7, CHAPTER 1, ARTICLE 2, SECTIONS 1770, 1773, AND 1773.1

FOR COMMERCIAL BUILDING, HIGHWAY, HEAVY CONSTRUCTION AND DREDGING PROJECTS

CRAFT: TELECOMMUNICATIONS TECHNICIAN

DETERMINATION: C-422-X-1-2003-2A
ISSUE DATE: August 22, 2003
EXPIRATION DATE OF DETERMINATION: June 1, 2004* Effective until superseded by a new determination issued by the Director of Industrial Relations. Contact the Division of Labor Statistics & Research at (415) 703-4774 for the new rates after 10 days from the expiration date, if no subsequent determination is issued.

LOCALITY: All localities within Contra Costa, Marin, Orange, and San Diego counties.

		Employer Payments				Straight-Time		Overtime Hourly Rate	
Classification (Journeyperson)	Basic Hourly Rate	Health and Welfare	Pension	Vacation and Holidays	Training	Hours	Total Hourly Rate	1 1/2X[a]	Holiday 2 1/2X
Telecommunications Technician	27.93	2.79	0.93	3.21	-	8	34.86	48.825	76.755

[a] Rate applies to work in excess of eight hours daily and for all hours over 40. Rate applies to all hours worked on Sunday .

RECOGNIZED HOLIDAYS: Holidays upon which the general prevailing hourly wage rate for Holiday work shall be paid, shall be all holidays in the collective bargaining agreement, applicable to the particular craft, classification, or type of worker employed on the project, which is on file with the Director of Industrial Relations. If the prevailing rate is not based on a collectively bargained rate, the holidays upon which the prevailing rate shall be paid shall be as provided in Section 6700 of the Government Code. You may obtain the holiday provisions for the current determinations on the Internet at http://www.dir.ca.gov/DLSR/PWD. Holiday provisions for current or superseded determinations may be obtained by contacting the Prevailing Wage Unit at (415) 703-4774.

TRAVEL AND/OR SUBSISTENCE PAYMENT: In accordance with Labor Code Sections 1773.1 and 1773.9, contractors shall make travel and/or subsistence payments to each worker to execute the work. You may obtain the travel and/or subsistence provisions for the current determinations on the Internet at http://www.dir.ca.gov/DLSR/PWD. Travel and/or subsistence requirements for current or superseded determinations may be obtained by contacting the Prevailing Wage Unit at (415) 703-4774.

GENERAL PREVAILING WAGE DETERMINATION MADE BY THE DIRECTOR OF INDUSTRIAL RELATIONS PURSUANT TO CALIFORNIA LABOR CODE PART 7, CHAPTER 1, ARTICLE 2, SECTIONS 1770, 1773, AND 1773.1

FOR COMMERCIAL BUILDING, HIGHWAY, HEAVY CONSTRUCTION AND DREDGING PROJECTS

CRAFT: TELECOMMUNICATIONS TECHNICIAN

DETERMINATION: C-422-X-1-2003-2B
ISSUE DATE: August 22, 2003
EXPIRATION DATE OF DETERMINATION: June 1, 2004* Effective until superseded by a new determination issued by the Director of Industrial Relations. Contact the Division of Labor Statistics & Research at (415) 703-4774 for the new rates after 10 days from the expiration date, if no subsequent determination is issued.

LOCALITY: All localities within the Alpine, Amador, Butte, Calaveras, Colusa, El Dorado, Fresno, Glenn, Humboldt, Imperial, Kern, Kings, Lake, Lassen, Madera, Mariposa, Mendocino, Merced, Modoc, Monterey, Napa, Nevada, Placer, Plumas, Riverside, Sacramento, San Benito, San Joaquin, San Luis Obispo, Santa Cruz, Shasta, Sierra, Siskiyou, Solano, Sonoma, Stanislaus, Sutter, Tehama, Trinity, Tulare, Tuolumne, Ventura, Yolo and Yuba counties.

		Employer Payments				Straight-Time		Overtime Hourly Rate	
Classification (Journeyperson)	Basic Hourly Rate	Health and Welfare	Pension	Vacation and Holidays	Training	Hours	Total Hourly Rate	1 1/2X[a]	Holiday 2 1/2X
Telecommunications Technician	27.18	2.79	0.93	3.13	-	8	34.03	47.62	74.80

[a] Rate applies to work in excess of eight hours daily and for all hours over 40. Rate applies to all hours worked on Sunday.

RECOGNIZED HOLIDAYS: Holidays upon which the general prevailing hourly wage rate for Holiday work shall be paid, shall be all holidays in the collective bargaining agreement, applicable to the particular craft, classification, or type of worker employed on the project, which is on file with the Director of Industrial Relations. If the prevailing rate is not based on a collectively bargained rate, the holidays upon which the prevailing rate shall be paid shall be as provided in Section 6700 of the Government Code. You may obtain the holiday provisions for the current determinations on the Internet at http://www.dir.ca.gov/DLSR/PWD. Holiday provisions for current or superseded determinations may be obtained by contacting the Prevailing Wage Unit at (415) 703-4774.

TRAVEL AND/OR SUBSISTENCE PAYMENT: In accordance with Labor Code Sections 1773.1 and 1773.9, contractors shall make travel and/or subsistence payments to each worker to execute the work. You may obtain the travel and/or subsistence provisions for the current determinations on the Internet at http://www.dir.ca.gov/DLSR/PWD. Travel and/or subsistence requirements for current or superseded determinations may be obtained by contacting the Prevailing Wage Unit at (415) 703-4774.

GENERAL PREVAILING WAGE DETERMINATION MADE BY THE DIRECTOR OF INDUSTRIAL RELATIONS

PURSUANT TO CALIFORNIA LABOR CODE PART 7, CHAPTER 1, ARTICLE 2, SECTIONS 1770, 1773 AND 1773.1

FOR COMMERCIAL BUILDING, HIGHWAY, HEAVY CONSTRUCTION AND DREDGING PROJECTS

LOCALITY: ALAMEDA COUNTY

DETERMINATION: ALA-2014-2

				EMPLOYER PAYMENTS						STRAIGHT-TIME		OVERTIME HOURLY RATE			CONTRACT PROVISIONS			
	CRAFT (JOURNEY LEVEL)	ISSUE DATE	EXPIRATION DATE	BASIC HOURLY RATE	HEALTH AND WELFARE	PENSION	VACATION/ HOLIDAY	TRAINING	OTHER PAYMENTS	HOURS	TOTAL HOURLY RATE	DAILY	SATURDAY	SUNDAY AND HOLIDAY	HOLIDAYS	SCOPE OF WORK	TRAVEL & SUBSISTENCE	PREDETERMINED INCREASE
#	**BRICKLAYER, BLOCKLAYER:**																	
	BRICKLAYER, BLOCKLAYER, STONEMASON	8/22/2013	04/30/2014*	A 37.980	9.690	10.000	B 3.000	0.800	C 1.230	D 8.0	62.700	E 83.190	E 83.190	103.680	HOLIDAYS	SCOPE	TRAVEL	**NO INCREASE**
	POINTER, CLEANER, CAULKER, WATERPROOFER	8/22/2014	06/30/2015*	A 42.080	9.690	10.520	F -	1.440	0.400	D 8.0	64.130	85.170	G 85.170	106.210	HOLIDAYS	SCOPE	TRAVEL	**NO INCREASE**
#	**BRICK TENDER**	8/22/2013	04/30/2014*	A 32.130	9.500	9.900	F -	0.340	-	8.0	51.870	H 67.930	H 67.930	84.000	HOLIDAYS	SCOPE	TRAVEL	**NO INCREASE**
#	**CARPET, LINOLEUM,**																	
	SOFT FLOOR LAYER	8/22/2014	06/30/2015*	A 44.820	9.700	8.050	I -	0.530	0.340	8.0	63.440	J 85.850	J 85.850	108.260	HOLIDAYS	SCOPE	TRAVEL	**NO INCREASE**
	FLOOR COVERING HANDLER AFTER 3 YEARS	8/22/2014	06/30/2015*	A 22.390	9.700	4.030	I -	0.050	0.340	8.0	36.510	J 47.700	J 47.700	58.900	HOLIDAYS	SCOPE	TRAVEL	**NO INCREASE**
	FLOOR COVERING HANDLER LESS THAN 3 YEARS	8/22/2014	06/30/2015*	A 17.900	9.700	3.220	I -	0.050	0.340	8.0	31.210	J 40.160	J 40.160	49.110	HOLIDAYS	SCOPE	TRAVEL	**NO INCREASE**
	FLOOR COVERING HANDLER TRAINEE, FIRST 3 MONTHS	8/22/2014	06/30/2015*	A 14.310	9.700	2.580	I -	0.050	0.340	8.0	26.980	J 34.140	J 34.140	41.290	HOLIDAYS	SCOPE	TRAVEL	**NO INCREASE**
	FLOOR COVERING HANDLER TRAINEE, SECOND 3 MONTHS	8/22/2014	06/30/2015*	A 16.110	9.700	2.900	I -	0.050	0.340	8.0	29.100	J 37.160	J 37.160	45.210	HOLIDAYS	SCOPE	TRAVEL	**NO INCREASE**
#	**ELECTRICIAN:**																	
	COMM & SYSTEM INSTALLER	2/22/2014	11/30/2014*	31.320	9.550	K 4.650	-	1.100	L 0.210	8.0	47.930	M 64.140	M 64.140	80.350	HOLIDAYS	SCOPE	TRAVEL	**NO INCREASE**
	COMM & SYSTEM TECH.	2/22/2014	11/30/2014*	35.660	9.550	K 4.650	-	1.100	L 0.210	8.0	52.420	M 70.870	M 70.870	89.330	HOLIDAYS	SCOPE	TRAVEL	**NO INCREASE**
	INSIDE WIREMAN,	8/22/2014	05/31/2015**	49.150	15.410	N 12.620	F -	1.780	O 1.110	8.0	81.540	P 107.120	132.690	132.690	HOLIDAYS	SCOPE	TRAVEL	INCREASE
	CABLE SPLICER-WELDER	8/22/2014	05/31/2015**	55.290	15.410	N 12.620	F -	1.780	O 1.180	8.0	87.940	P 116.710	145.480	145.480	HOLIDAYS	SCOPE	TRAVEL	INCREASE
#	**FIELD SURVEYOR:**																	
Q	CHIEF OF PARTY	2/22/2014	02/28/2015*	37.290	12.530	R 10.000	S 3.380	0.720	0.160	8.0	64.080	T 82.720	U 82.720	101.370	HOLIDAYS	SCOPE	TRAVEL	**NO INCREASE**
Q	INSTRUMENTMAN	2/22/2014	02/28/2015*	34.200	12.530	R 10.000	S 3.380	0.720	0.160	8.0	60.990	T 78.090	U 78.090	95.190	HOLIDAYS	SCOPE	TRAVEL	**NO INCREASE**
Q	CHAINMAN/RODMAN	2/22/2014	02/28/2015*	31.320	12.530	R 10.000	S 3.380	0.720	0.160	8.0	58.110	T 73.770	U 73.770	89.430	HOLIDAYS	SCOPE	TRAVEL	**NO INCREASE**
#	**GLAZIER**	8/22/2014	06/30/2015*	A 41.830	9.700	V 12.140	-	0.500	W 0.380	8.0	64.550	X 85.470	106.380	106.380	HOLIDAYS	SCOPE	TRAVEL	**NO INCREASE**
# Y	**MARBLE FINISHER**	8/22/2013	07/31/2014*	Z 28.050	9.690	3.870	I -	0.450	0.530	8.0	42.590	AA 56.610	70.640	70.640	HOLIDAYS	SCOPE	TRAVEL	**NO INCREASE**
# Y	**MARBLE MASON**	8/22/2013	07/31/2014*	Z 39.300	9.690	11.990	I -	0.800	0.730	8.0	62.510	AA 82.160	101.810	101.810	HOLIDAYS	SCOPE	TRAVEL	**NO INCREASE**
#	**PAINTER:**																	
	BRUSH AND SPRAY	2/22/2014	06/30/2014*	AB 34.830	9.700	R 10.680	I -	0.410	0.380	D 8.0	56.000	73.420	AC 73.420	90.830	HOLIDAYS	SCOPE	TRAVEL	**NO INCREASE**
	INDUSTRIAL PAINTER	2/22/2014	06/30/2014*	AB 35.080	9.700	R 10.680	I -	0.410	0.380	D 8.0	56.250	73.790	AC 73.790	91.330	HOLIDAYS	SCOPE	TRAVEL	**NO INCREASE**
	SANDBLASTER, STEAM CLEANER, WATERBLASTER	2/22/2014	06/30/2014*	AB 35.330	9.700	R 10.680	I -	0.410	0.380	D 8.0	56.500	74.170	AC 74.170	91.830	HOLIDAYS	SCOPE	TRAVEL	**NO INCREASE**
	EXOTIC MATERIALS	2/22/2014	06/30/2014*	AB 35.580	9.700	R 10.680	I -	0.410	0.380	D 8.0	56.750	74.540	AC 74.540	92.330	HOLIDAYS	SCOPE	TRAVEL	**NO INCREASE**
	PAPERHANGER/WALLCOVERING	2/22/2014	06/30/2014*	AB 35.830	9.700	R 10.680	I -	0.410	0.380	D 8.0	57.000	74.920	AC 74.920	92.830	HOLIDAYS	SCOPE	TRAVEL	**NO INCREASE**
	TAPER	8/22/2014	06/30/2015*	AD 40.320	9.700	10.540	AE -	0.360	0.290	8.0	61.210	77.910	D 77.910	AC 94.620	HOLIDAYS	SCOPE	TRAVEL	**NO INCREASE**
AF	TAPER CLEAN-UP	8/22/2014	06/30/2015*	AG 16.100	9.700	-	-	-	-	8.0	25.800	33.360	D 33.360	AC 40.920	HOLIDAYS	SCOPE	TRAVEL	**NO INCREASE**
#	**PLASTERER**	8/22/2014	06/30/2015**	AH 37.480	12.530	10.630	F -	1.050	0.900	D 8.0	62.590	AI 78.760	AI 78.760	94.930	HOLIDAYS	SCOPE	TRAVEL	INCREASE
# AJ	**PLASTER TENDER**	8/22/2014	06/30/2015**	AK 32.400	9.080	12.420	F -	0.340	0.580	8.0	54.820	AL 68.470	AL 68.470	82.120	HOLIDAYS	SCOPE	TRAVEL	INCREASE
AJ	GUN MAN	8/22/2014	06/30/2015**	AK 33.150	9.080	12.420	F -	0.340	0.580	8.0	55.570	AL 69.600	AL 69.600	83.620	HOLIDAYS	SCOPE	TRAVEL	INCREASE
#	**PLUMBER:**																	
	PLUMBER, PIPEFITTER, STEAMFITTER	8/22/2014	06/30/2015*	A 54.710	AM 16.550	AN 12.840	-	3.700	0.300	8.0	91.100	E 120.210	E 120.210	149.320	HOLIDAYS	SCOPE	TRAVEL	**NO INCREASE**
	UNDERGROUND UTILITY PIPEFITTER	8/22/2014	06/30/2015**	26.550	5.800	AM 3.000	2.000	0.450	0.600	D 8.0	38.400	51.670	51.670	64.950	HOLIDAYS	SCOPE	TRAVEL	INCREASE
	LANDSCAPE PIPEFITTER	8/22/2014	06/30/2015**	26.550	5.800	AM 3.000	2.000	0.450	0.600	D 8.0	38.400	51.670	51.670	64.950	HOLIDAYS	SCOPE	TRAVEL	INCREASE
AO	UNDERGROUND UTILITY ASSISTANT JOURNEYMAN	8/22/2014	06/30/2015**	15.550	5.800	AM 3.000	2.000	0.450	0.600	D 8.0	27.400	35.170	35.170	42.950	HOLIDAYS	SCOPE	TRAVEL	INCREASE
AO	LANDSCAPE ASSISTANT JOURNEYMAN	8/22/2014	06/30/2015**	15.550	5.800	AM 3.000	2.000	0.450	0.600	D 8.0	27.400	35.170	35.170	42.950	HOLIDAYS	SCOPE	TRAVEL	INCREASE
AP	UNDERGROUND UTILITY TRADESMAN	8/22/2014	06/30/2015**	10.850	5.800	AM 3.000	2.000	0.450	0.600	D 8.0	22.700	28.130	28.130	33.550	HOLIDAYS	SCOPE	TRAVEL	INCREASE
AQ	LANDSCAPE TRADESMAN I	8/22/2014	06/30/2015**	10.500	5.800	AM -	2.000	0.450	0.600	D 8.0	19.350	24.600	24.600	29.850	HOLIDAYS	SCOPE	TRAVEL	INCREASE
AQ	LANDSCAPE TRADESMAN II	8/22/2014	06/30/2015**	10.850	5.800	AM 3.000	2.000	0.450	0.600	D 8.0	22.700	28.130	28.130	33.550	HOLIDAYS	SCOPE	TRAVEL	INCREASE
	SPRINKLER FITTER (FIRE PROTECTION AND FIRE CONTROL SYSTEMS)	2/22/2014	07/31/2014*	A 52.420	8.770	15.500	F -	1.100	0.400	8.0	78.190	104.400	104.400	130.610	HOLIDAYS	SCOPE	TRAVEL	**NO INCREASE**
#	**ROOFER**	8/22/2014	07/31/2015*	31.550	8.140	5.230	3.510	0.550	0.440	D 8.0	49.420	J 65.190	J 65.190	80.970	HOLIDAYS	SCOPE	TRAVEL	**NO INCREASE**
	BITUMASTIC, ENAMELER, PIPE WRAPPER, COAL TAR PITCH BUILD-UP	8/22/2014	07/31/2015*	33.550	8.140	5.230	3.510	0.550	0.440	D 8.0	51.420	J 68.190	J 68.190	84.970	HOLIDAYS	SCOPE	TRAVEL	**NO INCREASE**
	MASTIC WORKER, KETTLEMAN	8/22/2014	07/31/2015*	31.800	8.140	5.230	3.510	0.550	0.440	D 8.0	49.670	J 65.570	J 65.570	81.470	HOLIDAYS	SCOPE	TRAVEL	**NO INCREASE**
#	**SHEET METAL WORKER**	8/22/2014	06/30/2015*	AB 54.850	AR 13.110	AM 21.120	F -	1.410	1.150	8.0	91.640	AS 119.060	AS 119.060	146.490	HOLIDAYS	SCOPE	TRAVEL	**NO INCREASE**
	TOTAL SHEET METAL CONTRACT OF $200,000 OR LESS	8/22/2014	06/30/2015*	AB 48.790	AR 13.110	AM 20.500	F -	1.410	1.150	8.0	84.960	AS 109.350	AS 109.350	133.750	HOLIDAYS	SCOPE	TRAVEL	**NO INCREASE**
	SERVICE MECHANIC (TOTAL SHEET METAL CONTRACT OF $200,000 OR LESS)	8/22/2014	06/30/2015*	AB 35.840	AT 12.590	AM 13.060	F -	1.310	1.150	8.0	63.950	AU 81.870	AU 81.870	99.790	HOLIDAYS	SCOPE	TRAVEL	**NO INCREASE**
	SERVICE TECHNICIAN (TOTAL SHEET METAL CONTRACT OF $200,000 OR LESS)	8/22/2014	06/30/2015*	AB 31.550	AT 12.590	AM 8.930	F -	1.310	1.150	8.0	55.530	AU 71.300	AU 71.300	87.080	HOLIDAYS	SCOPE	TRAVEL	**NO INCREASE**
	AIR CONDITIONING SPECIALIST (TOTAL SHEET METAL CONTRACT OF $200,000 OR LESS)	8/22/2014	06/30/2015*	AB 28.320	AT 12.590	AM 3.770	F -	1.290	1.150	8.0	47.120	AS 61.280	AS 61.280	75.440	HOLIDAYS	SCOPE	TRAVEL	**NO INCREASE**
	AIR CONDITIONING JOURNEYMAN (TOTAL SHEET METAL CONTRACT OF $200,000 OR LESS)	8/22/2014	06/30/2015*	AB 33.130	AR 12.610	AM 8.770	F -	1.290	1.150	8.0	56.950	AS 73.510	AS 73.510	90.080	HOLIDAYS	SCOPE	TRAVEL	**NO INCREASE**
	METAL DECK & SIDING	8/22/2014	12/31/2014*	AB 33.860	AM 13.530	18.000	F -	AV 0.300	-	8.0	65.690	AS 82.620	AS 82.620	99.550	HOLIDAYS	SCOPE	TRAVEL	**NO INCREASE**
# AW	**TERRAZZO FINISHER**	8/22/2014	06/30/2015**	AD 33.190	9.690	5.120	F -	0.800	0.490	8.0	49.290	AS 63.780	AS 63.780	78.280	HOLIDAYS	SCOPE	TRAVEL	INCREASE
# AW	**TERRAZZO WORKER**	8/22/2014	06/30/2015**	AD 40.420	9.690	14.420	F -	0.800	0.670	8.0	66.000	AS 83.540	AS 83.540	101.080	HOLIDAYS	SCOPE	TRAVEL	INCREASE
#	**TILE FINISHER**	8/22/2014	03/31/2015**	AX 22.060	8.530	3.440	0.700	0.400	1.090	8.0	36.220	47.250	D 47.250	58.280	HOLIDAYS	SCOPE	TRAVEL	INCREASE

GENERAL PREVAILING WAGE DETERMINATION MADE BY THE DIRECTOR OF INDUSTRIAL RELATIONS

PURSUANT TO CALIFORNIA LABOR CODE PART 7, CHAPTER 1, ARTICLE 2, SECTIONS 1770, 1773 AND 1773.1

FOR COMMERCIAL BUILDING, HIGHWAY, HEAVY CONSTRUCTION AND DREDGING PROJECTS

LOCALITY: ALAMEDA COUNTY

DETERMINATION: ALA-2014-2

			EMPLOYER PAYMENTS						STRAIGHT-TIME		OVERTIME HOURLY RATE			CONTRACT PROVISIONS			
CRAFT (JOURNEY LEVEL)	ISSUE DATE	EXPIRATION DATE	BASIC HOURLY RATE	HEALTH AND WELFARE	PENSION	VACATION/ HOLIDAY	TRAINING	OTHER PAYMENTS	HOURS	TOTAL HOURLY RATE	DAILY	SATURDAY	SUNDAY AND HOLIDAY	HOLIDAYS	SCOPE OF WORK	TRAVEL & SUBSISTENCE	PREDETERMINED INCREASE
RED CIRCLED FINISHER	8/22/2014	03/31/2015**	AX 27.750	8.530	3.670	1.300	0.300	1.100	8.0	42.650	56.530	D 56.530	70.400	HOLIDAYS	SCOPE	TRAVEL	INCREASE
# **TILE SETTER**	8/22/2014	03/31/2015**	AX 38.240	8.530	4.670	2.350	0.590	1.680	8.0	56.060	75.180	D 75.180	94.300	HOLIDAYS	SCOPE	TRAVEL	INCREASE
WATER WELL DRILLER	8/22/1998	12/31/1998*	12.700	3.200	0.780	AY 0.630	-	-	8.0	17.310	AZ 23.660	AZ 23.660	AZ 23.660	HOLIDAYS	SCOPE	TRAVEL	**NO INCREASE**
PUMP INSTALLER	8/22/1998	12/31/1998*	12.700	3.200	0.780	AY 0.630	-	-	8.0	17.310	AZ 23.660	AZ 23.660	AZ 23.660	HOLIDAYS	SCOPE	TRAVEL	**NO INCREASE**
HELPER	8/22/1998	12/31/1998*	10.380	3.200	0.780	BA 0.520	-	-	8.0	14.880	AZ 20.070	AZ 20.070	AZ 20.070	HOLIDAYS	SCOPE	TRAVEL	**NO INCREASE**

FOOTNOTES

GENERAL PREVAILING WAGE DETERMINATION MADE BY THE DIRECTOR OF INDUSTRIAL RELATIONS

PURSUANT TO CALIFORNIA LABOR CODE PART 7, CHAPTER 1, ARTICLE 2, SECTIONS 1770, 1773 AND 1773.1

LOCALITY: ALAMEDA COUNTY

DETERMINATION: ALA-2014-2

* EFFECTIVE UNTIL SUPERSEDED BY A NEW DETERMINATION ISSUED BY THE DIRECTOR OF INDUSTRIAL RELATIONS. CONTACT THE OFFICE OF THE DIRECTOR - RESEARCH UNIT AT (415) 703-4774 FOR THE NEW RATES AFTER TEN DAYS AFTER THE EXPIRATION DATE IF NO SUBSEQUENT DETERMINATION IS ISSUED.

** THE RATE TO BE PAID FOR WORK PERFORMED AFTER THIS DATE HAS BEEN DETERMINED. IF WORK WILL EXTEND PAST THIS DATE, THE NEW RATE MUST BE PAID AND SHOULD BE INCORPORATED IN CONTRACTS ENTERED INTO NOW. CONTACT THE OFFICE OF THE DIRECTOR - RESEARCH UNIT FOR SPECIFIC RATES AT (415) 703-4774.

\# INDICATES AN APPRENTICEABLE CRAFT. THE CURRENT APPRENTICE WAGE RATES ARE AVAILABLE ON THE INTERNET @ HTTP://WWW.DIR.CA.GOV/OPRL/PWAPPWAGE/PWAPPWAGESTART.ASP. TO OBTAIN ANY APPRENTICE WAGE RATES AS OF JULY 1, 2008 AND PRIOR TO SEPTEMBER 27, 2012, PLEASE CONTACT THE DIVISION OF APPRENTICESHIP STANDARDS OR REFER TO THE DIVISION OF APPRENTICESHIP STANDARDS' WEBSITE AT HTTP://WWW.DIR.CA.GOV/DAS/DAS.HTML.

& THE BASIC HOURLY RATE AND EMPLOYER PAYMENTS ARE NOT TAKEN FROM A COLLECTIVE BARGAINING AGREEMENT FOR THIS CRAFT OR CLASSIFICATION.

A INCLUDES AMOUNT WITHHELD FOR DUES CHECK OFF.

B AMOUNT INCLUDED IN FACTORING OVERTIME RATES.

C INCLUDES AMOUNT FOR INDUSTRY PROMOTION FUND, INTERNATIONAL MASONRY INSTITUTE (IMI), AND LABOR MANAGEMENT COOPERATION COMMITTEE (LMCC)

D SATURDAYS IN THE SAME WORK WEEK MAY BE WORKED AT STRAIGHT-TIME IF JOB IS SHUT DOWN DURING THE NORMAL WORKWEEK DUE TO INCLEMENT WEATHER.

E RATE APPLIES TO THE FIRST 2 DAILY OVERTIME HOURS AND THE FIRST 10 HOURS ON SATURDAY; ALL OTHER TIME IS PAID AT THE SUNDAY AND HOLIDAY OVERTIME HOURLY RATE.

F INCLUDED IN STRAIGHT-TIME HOURLY RATE.

G RATE APPLIES TO THE FIRST 10 HOURS WORKED ON SATURDAY. ALL OTHER HOURS ARE PAID AT THE SUNDAY/HOLIDAY RATE.

H RATE APPLIES TO THE FIRST 2 DAILY OVERTIME HOURS AND THE FIRST 8 HOURS ON SATURDAY ONLY. ALL OTHER TIME IS PAID AT THE SUNDAY AND HOLIDAY OVERTIME HOURLY RATE. SATURDAYS IN THE SAME WORK WEEK MAY BE WORKED AT STRAIGHT-TIME IF JOB IS SHUT DOWN DURING THE NORMAL WORKWEEK DUE TO INCLEMENT WEATHER.

I INCLUDED IN BASIC HOURLY RATE.

J RATE APPLIES TO THE FIRST 4 DAILY OVERTIME HOURS AND THE FIRST 12 HOURS WORKED ON SATURDAY; ALL OTHER TIME IS PAID AT THE SUNDAY AND HOLIDAY OVERTIME HOURLY RATE.

K IN ADDITION, AN AMOUNT EQUAL TO 3% OF THE BASIC HOURLY RATE IS ADDED TO THE TOTAL HOURLY RATE AND OVERTIME HOURLY RATES FOR THE NATIONAL EMPLOYEES BENEFIT BOARD.

L IN ADDITION, AN AMOUNT EQUAL TO 0.5% OF THE BASIC HOURLY RATE, WHICH IS FACTORED AT THE APPLICABLE OVERTIME MULTIPLIER, IS ADDED TO THE TOTAL HOURLY RATE AND OVERTIME HOURLY RATES.

M RATE APPLIES TO THE FIRST 4 DAILY OVERTIME HOURS AND THE FIRST 8 HOURS WORKED ON SATURDAY. ALL OTHER TIME IS PAID AT THE SUNDAY AND HOLIDAY OVERTIME RATE. IN ADDITION, AN AMOUNT EQUAL TO 3% OF THE BASIC HOURLY RATE IS ADDED TO THE TOTAL HOURLY RATE AND OVERTIME HOURLY RATES FOR THE NATIONAL EMPLOYEES BENEFIT BOARD.

N PURSUANT TO LABOR CODE SECTIONS 1773.1 AND 1773.8, THE AMOUNT PAID FOR THIS EMPLOYER PAYMENT MAY VARY RESULTING IN A LOWER TAXABLE BASIC HOURLY WAGE RATE, BUT THE TOTAL HOURLY RATES FOR STRAIGHT TIME AND OVERTIME MAY NOT BE LESS THAN THE GENERAL PREVAILING RATE OF PER DIEM WAGES.

O INCLUDES AN AMOUNT (1.05% OF THE BASIC HOURLY RATE) FOR THE CONTRACT ADMINISTRATION FUND, WHICH IS FACTORED AT THE APPLICABLE OVERTIME MULTIPLIER.

P THIS APPLIES TO DAILY OVERTIME RATE FOR THE FIRST SHIFT IN A MULTISHIFT OPERATION AND THE FIRST 2 HOURS OF DAILY OVERTIME FOR NON-SHIFT WORK. ALL OTHER NON-SHIFT WORK IS PAID AT THE SATURDAY, SUNDAY AND HOLIDAY RATE.

Q ALL CREWS, WITHOUT CONSIDERATION TO THE NUMBER OF INDIVIDUALS IN THE CREW, SHALL INCLUDE A CHIEF OF PARTY. A CREW CONSISTS OF ONE (1) OR MORE EMPLOYEES PERFORMING FIELD AND CONSTRUCTION SURVEY WORK.

R INCLUDES AN AMOUNT PER HOUR WORKED FOR ANNUITY TRUST FUND.

S INCLUDES AN AMOUNT PER HOUR WORKED FOR SUPPLEMENTAL DUES.

T RATE APPLIES TO THE FIRST 4 DAILY OVERTIME HOURS, MONDAY THROUGH FRIDAY. ALL OTHER OVERTIME IS PAID AT THE SUNDAY/HOLIDAY RATE.

U RATE APPLIES TO THE FIRST 12 OVERTIME HOURS WORKED. ALL OTHER OVERTIME IS PAID AT THE SUNDAY/HOLIDAY RATE. IN THE EVENT IT IS NOT REASONABLY POSSIBLE TO COMPLETE 40 HOURS OF WORK ON AN 8 HOUR DAY, MONDAY THROUGH FRIDAY, THEN THE BALANCE OF THE 40 HOURS, UP TO 8 HOURS, MAY BE WORKED ON SATURDAY AT THE STRAIGHT-TIME RATE.

V INCLUDES AN AMOUNT PER HOUR WORKED FOR IUPAT, IARP, AND RETIREE PENSION.

W INCLUDES AMOUNTS FOR INDUSTRY FUND, WORK PRESERVATION FUND, AND LABOR MANAGEMENT COOPERATION INITIATIVE

X RATE APPLIES TO THE FIRST 2 DAILY OVERTIME HOURS AND FIRST 8 HOURS WORKED ON DESIGNATED DAYS OFF; ALL OTHER TIME IS PAID AT THE SATURDAY, SUNDAY AND HOLIDAY OVERTIME RATE.

Y EMPLOYEES WORKING ON ANY SUSPENDED PLATFORM/SCAFFOLD SHALL BE PAID AN ADDITIONAL $15.00 PER DAY ABOVE THE WAGE RATE.

Z INCLUDES AN AMOUNT FOR DUES CHECK-OFF AND VACATION/HOLIDAY WHICH ARE FACTORED INTO OVERTIME RATES.

AA RATE APPLIES TO FIRST 2 OVERTIME HOURS MONDAY THROUGH FRIDAY; ALL OTHER OVERTIME IS PAID AT THE DOUBLE TIME RATE.

AB INCLUDES AMOUNT FOR VAC/HOL AND DUES CHECK OFF.

AC DESIGNATED DAYS OFF SHALL BE PAID AT THE SATURDAY OVERTIME RATE; PLEASE REFER TO THE HOLIDAY PROVISIONS FOR A LIST OF DESIGNATED DAYS OFF.

AD INCLUDES AN AMOUNT FOR VACATION/DUES CHECK OFF WHICH IS NOT FACTORED IN THE OVERTIME RATES.

AE INCLUDED IN STRAIGHT-TIME HOURLY RATE WHICH IS NOT FACTORED IN THE OVERTIME RATES.

AF PLEASE NOTE THAT THE TAPER CLEAN-UP APPLIES ONLY TO THE TAPER CLASSIFICATION.

AG INCLUDES AN AMOUNT WITHHELD FOR DUES CHECK OFF WHICH IS NOT FACTORED IN OVERTIME AND HOLIDAY WAGE RATES.

AH INCLUDE AMOUNTS WITHHELD FOR DUES CHECK OFF AND VACATION WHICH IS NOT FACTORED INTO OVERTIME. EMPLOYEES OPERATING AND WORKING BEHIND PLASTER GUNS SHALL RECEIVE AN ADDITIONAL $5.00 PER DAY ABOVE THE WAGE RATE. EMPLOYEES WORKING ON AN EXTERIOR SUSPENDED SCAFFOLD SHALL BE PAID AN ADDITIONAL $10.00 PER DAY ABOVE THE WAGE RATE.

AI RATE APPLIES TO THE FIRST 4 OVERTIME HOURS MONDAY THROUGH FRIDAY AND THE FIRST 8 HOURS WORKED ON SATURDAYS AND DESIGNATED DAYS OFF. ALL OTHER TIME IS PAID AT THE SUNDAY AND HOLIDAY OVERTIME RATE.

AJ ALL HOD CARRIERS WORKING ON THE HOSE SHALL RECEIVE $5.00 PER DAY OVER SCALE.

AK INCLUDES AN AMOUNT FOR VACATION, DUES CHECK-OFF AND ORGANIZING DUES WHICH ARE NOT FACTORED INTO OVERTIME.

AL RATE APPLIES TO THE FIRST 4 OVERTIME HOURS MONDAY THROUGH FRIDAY AND THE FIRST 8 HOURS WORKED ON SATURDAY. ALL OTHER TIME IS PAID AT THE SUNDAY AND HOLIDAY OVERTIME RATE.

AM PURSUANT TO LABOR CODE SECTIONS 1773.1 AND 1773.8, THE AMOUNT PAID FOR THIS EMPLOYER PAYMENT MAY VARY RESULTING IN A LOWER TAXABLE BASIC HOURLY WAGE RATE, BUT THE TOTAL HOURLY RATES FOR STRAIGHT TIME AND OVERTIME MAY NOT BE LESS THAN THE GENERAL PREVAILING RATE OF PER DIEM WAGES.

AN IN ADDITION, AN AMOUNT OF $3.00 FOR 401A SUPPLEMENTAL PENSION, WHICH IS FACTORED AT THE APPLICABLE OVERTIME MULTIPLIER, IS ADDED TO THE TOTAL HOURLY RATE AND OVERTIME HOURLY RATE. PURSUANT TO LABOR CODE SECTIONS 1773.1 AND 1773.8, THE AMOUNT PAID FOR THIS EMPLOYER PAYMENT MAY VARY RESULTING IN A LOWER TAXABLE BASIC HOURLY WAGE RATE, BUT THE TOTAL HOURLY RATES FOR STRAIGHT TIME AND OVERTIME MAY NOT BE LESS THAN THE GENERAL PREVAILING RATE OF PER DIEM WAGES.

AO THERE MUST BE AT LEAST ONE JOURNEYMAN PIPEFITTER PER CONTRACTOR ON EACH JOBSITE.

AP THERE SHALL BE NO MORE THAN THREE TRADESMEN TO EVERY TWO JOURNEYMAN PIPEFITTER/ASSISTANT JOURNEYMAN PIPEFITTER COMBINATION EMPLOYED PER CONTRACTOR ON EACH JOBSITE.

AQ THERE SHALL BE NO MORE THAN FOUR TRADESMEN TO EVERY TWO JOURNEYMAN PIPEFITTER/ASSISTANT JOURNEYMAN PIPEFITTER COMBINATION EMPLOYED PER CONTRACTOR ON EACH JOBSITE. MAINTENANCE WORK, BOTH DURING AND AFTER THE PLANT ESTABLISHMENT PERIOD, MAY BE PERFORMED BY LANDSCAPE TRADESMEN WITHOUT THE SUPERVISION OF A JOURNEYMAN PIPEFITTER.

AR INCLUDES SMOHIT AND SHC. EFFECTIVE 1/1/2013, PURSUANT TO LABOR CODE SECTIONS 1773.1 AND 1773.8, THE AMOUNT PAID FOR THIS EMPLOYER PAYMENT MAY VARY RESULTING IN A LOWER TAXABLE BASIC HOURLY WAGE RATE, BUT THE TOTAL HOURLY RATES FOR STRAIGHT TIME AND OVERTIME MAY NOT BE LESS THAN THE GENERAL PREVAILING RATE OF PER DIEM WAGES.

AS RATE APPLIES TO THE FIRST 2 DAILY OVERTIME HOURS AND THE FIRST 8 HOURS ON SATURDAY ONLY; ALL OTHER TIME IS PAID AT THE SUNDAY AND HOLIDAY OVERTIME HOURLY RATE.

AT INCLUDES SHC. EFFECTIVE 1/1/2013, PURSUANT TO LABOR CODE SECTIONS 1773.1 AND 1773.8, THE AMOUNT PAID FOR THIS EMPLOYER PAYMENT MAY VARY RESULTING IN A LOWER TAXABLE BASIC HOURLY WAGE RATE, BUT THE TOTAL HOURLY RATES FOR STRAIGHT TIME AND OVERTIME MAY NOT BE LESS THAN THE GENERAL PREVAILING RATE OF PER DIEM WAGES.

AU RATE APPLIES TO FIRST 4 DAILY OVERTIME HOURS AND THE FIRST 8 HOURS WORKED ON SATURDAY DURING THE EMPLOYEES NORMAL WORKING HOURS. ALL OTHER OVERTIME HOURS SHALL BE PAID AT THE SUNDAY AND HOLIDAY DOUBLE TIME RATE.

AV INCLUDES $0.03 FOR SCHOLAR FUND.

AW THE RATIO OF TERRAZZO FINISHER HOURS TO TERRAZZO WORKER HOURS SHALL NOT EXCEED TWO (2) TO ONE (1).

AX INCLUDES AMOUNT WITHHELD FOR DUES CHECK OFF, WHICH IS FACTORED IN THE OVERTIME RATES. ANY EMPLOYEE WORKING UNDERGROUND SHALL RECEIVE $1.00 PER HOUR IN ADDITION TO REGULAR WAGES.

AY RATE APPLIES TO FIRST YEAR OF EMPLOYMENT ONLY; $0.88 AFTER 2 YEARS OF EMPLOYMENT.

AZ RATE APPLIES TO ALL TIME WORKED IN EXCESS OF 8 HOURS PER DAY OR 40 HOURS PER WEEK AND FOR ALL HOURS ON SUNDAYS AND HOLIDAYS. RATE DOES NOT INCLUDE ANY ADDITIONAL AMOUNT THAT MAY BE REQUIRED FOR VACATION/HOLIDAY PAYMENT.

BA RATE APPLIES TO FIRST YEAR OF EMPLOYMENT ONLY; $0.72 AFTER 2 YEARS OF EMPLOYMENT.

RECOGNIZED HOLIDAYS: HOLIDAYS UPON WHICH THE GENERAL PREVAILING HOURLY WAGE RATE FOR HOLIDAY WORK SHALL BE PAID, SHALL BE ALL HOLIDAYS IN THE COLLECTIVE BARGAINING AGREEMENT, APPLICABLE TO THE PARTICULAR CRAFT, CLASSIFICATION, OR TYPE OF WORKER EMPLOYED ON THE PROJECT, WHICH IS ON FILE WITH THE DIRECTOR OF INDUSTRIAL RELATIONS. IF THE PREVAILING RATE IS NOT BASED ON A COLLECTIVELY BARGAINED RATE, THE HOLIDAYS UPON WHICH THE PREVAILING RATE SHALL BE PAID SHALL BE AS PROVIDED IN SECTION 6700 OF THE GOVERNMENT CODE. YOU MAY OBTAIN THE HOLIDAY PROVISIONS FOR THE CURRENT DETERMINATIONS ON THE INTERNET AT HTTP://WWW.DIR.CA.GOV/OPRL/PWD. HOLIDAY PROVISIONS FOR CURRENT OR SUPERSEDED DETERMINATIONS MAY BE OBTAINED BY CONTACTING THE OFFICE OF THE DIRECTOR - RESEARCH UNIT AT (415) 703-4774.

TRAVEL AND/OR SUBSISTENCE PAYMENT: IN ACCORDANCE WITH LABOR CODE SECTIONS 1773.1 AND 1773.9, CONTRACTORS SHALL MAKE TRAVEL AND/OR SUBSISTENCE PAYMENTS TO EACH WORKER TO EXECUTE THE WORK. YOU MAY OBTAIN THE TRAVEL AND/OR SUBSISTENCE PROVISIONS FOR THE CURRENT DETERMINATIONS ON THE INTERNET @ HTTP://WWW.DIR.CA.GOV/OPRL/PWD. TRAVEL AND/OR SUBSISTENCE REQUIREMENTS FOR CURRENT OR SUPERSEDED DETERMINATIONS MAY BE OBTAINED FROM THE OFFICE OF THE DIRECTOR - RESEARCH UNIT AT (415) 703-4774.

ALA-2014-2-Determination

GENERAL PREVAILING WAGE DETERMINATION MADE AY THE DIRECTOR OF INDUSTRIAL RELATIONS

PURSUANT TO CALIFORNIA LAAOR CODE PART 7, CHAPTER 1, ARTICLE 2, SECTIONS 1770, 1773 AND 1773.1

FOR COMMERCIAL AUILDING, HIGHWAY, HEAVY CONSTRUCTION AND DREDGING PROJECTS

LOCALITY: ALAMEDA COUNTY

DETERMINATION: ALA-2014-2

				INCREASE 1		INCREASE 2		INCREASE 3		INCREASE 4		INCREASE 5		INCREASE 6		INCREASE 7	
	CRAFT (JOURNEY LEVEL)	ISSUE DATE	EXPIRATION DATE	DATE OF NEXT CHANGE	AMOUNT OF INCREASE	DATE OF NEXT CHANGE	AMOUNT OF INCREASE	DATE OF NEXT CHANGE	AMOUNT OF INCREASE	DATE OF NEXT CHANGE	AMOUNT OF INCREASE	DATE OF NEXT CHANGE	AMOUNT OF INCREASE	DATE OF NEXT CHANGE	AMOUNT OF INCREASE	DATE OF NEXT CHANGE	AMOUNT OF INCREASE
	ELECTRICIAN:																
	INSIDE WIREMAN,	8/22/2014	05/31/2015**	6/1/2015	$3.25 A												
	CABLE SPLICER-WELDER	8/22/2014	05/31/2015**	6/1/2015	$3.25 A												
	PLASTERER	8/22/2014	06/30/2015**	7/1/2015	$1.70 A	7/1/2016	$1.70 A										
B	**PLASTER TENDER**	8/22/2014	06/30/2015**	7/1/2015	$0.60 C												
B	GUN MAN	8/22/2014	06/30/2015**	7/1/2015	$0.60 C												
	PLUMBER:																
	UNDERGROUND UTILITY PIPEFITTER	8/22/2014	06/30/2015**	7/1/2015	$0.85 D	7/1/2016	$0.80 E										
	LANDSCAPE PIPEFITTER	8/22/2014	06/30/2015**	7/1/2015	$0.85 D	7/1/2016	$0.80 E										
F	UNDERGROUND UTILITY ASSISTANT JOURNEYMAN	8/22/2014	06/30/2015**	7/1/2015	$0.85 D	7/1/2016	$0.80 E										
F	LANDSCAPE ASSISTANT JOURNEYMAN	8/22/2014	06/30/2015**	7/1/2015	$0.85 D	7/1/2016	$0.80 E										
G	UNDERGROUND UTILITY TRADESMAN	8/22/2014	06/30/2015**	7/1/2015	$0.85 D	7/1/2016	$0.80 E										
H	LANDSCAPE TRADESMAN I	8/22/2014	06/30/2015**	7/1/2015	$0.85 D	7/1/2016	$0.80 E										
H	LANDSCAPE TRADESMAN II	8/22/2014	06/30/2015**	7/1/2015	$0.85 D	7/1/2016	$0.80 E										
I	**TERRAZZO FINISHER**	8/22/2014	06/30/2015**	7/1/2015	$0.75 A	7/1/2016	$1.00 A	7/1/2017	$1.00 A	7/1/2018	$1.25 A						
I	**TERRAZZO WORKER**	8/22/2014	06/30/2015**	7/1/2015	$1.25 A	7/1/2016	$1.50 A	7/1/2017	$1.75 A	7/1/2018	$2.00 A						
	TILE FINISHER	8/22/2014	03/31/2015**	4/1/2015	$1.14 A												
	RED CIRCLED FINISHER	8/22/2014	03/31/2015**	4/1/2015	$1.14 A												
	TILE SETTER	8/22/2014	03/31/2015**	4/1/2015	$1.75 A												

FOOTNOTES

GENERAL PREVAILING WAGE DETERMINATION MADE BY THE DIRECTOR OF INDUSTRIAL RELATIONS

PURSUANT TO CALIFORNIA LABOR CODE PART 7, CHAPTER 1, ARTICLE 2, SECTIONS 1770, 1773 AND 1773.1

LOCALITY: ALAMEDA COUNTY

DETERMINATION: ALA-2014-2

A THE PREDETERMINED INCREASE SHOWN IS TO BE ALLOCATED TO WAGES AND/OR EMPLOYER PAYMENTS. PLEASE CONTACT THE OFFICE OF THE DIRECTOR - RESEARCH UNIT AT (415) 703-4774 WHEN THE PREDETERMINED INCREASE BECOMES DUE TO CONFIRM THE DISTRIBUTION. PLEASE ALSO EXAMINE THE IMPORTANT NOTICES TO SEE IF ANY MODIFICATIONS HAVE BEEN ISSUED, AS THERE MAY BE REDUCTIONS TO PREDETERMINED INCREASES.

B ALL HOD CARRIERS WORKING ON THE HOSE SHALL RECEIVE $5.00 PER DAY OVER SCALE.

C $0.25 TO HEALTH AND WELFARE AND $0.35 TO PENSION.

D $0.05 TO THE BASIC HOURLY RATE AND $0.80 TO HEALTH AND WELFARE

E $0.10 TO THE BASIC HOURLY RATE, $0.60 TO HEALTH AND WELFARE, AND $0.10 TO VACATION

F THERE MUST BE AT LEAST ONE JOURNEYMAN PIPEFITTER PER CONTRACTOR ON EACH JOBSITE.

G THERE SHALL BE NO MORE THAN THREE TRADESMEN TO EVERY TWO JOURNEYMAN PIPEFITTER/ASSISTANT JOURNEYMAN PIPEFITTER COMBINATION EMPLOYED PER CONTRACTOR ON EACH JOBSITE.

H THERE SHALL BE NO MORE THAN FOUR TRADESMEN TO EVERY TWO JOURNEYMAN PIPEFITTER/ASSISTANT JOURNEYMAN PIPEFITTER COMBINATION EMPLOYED PER CONTRACTOR ON EACH JOBSITE. MAINTENANCE WORK, BOTH DURING AND AFTER THE PLANT ESTABLISHMENT PERIOD, MAY BE PERFORMED BY LANDSCAPE TRADESMEN WITHOUT THE SUPERVISION OF A JOURNEYMAN PIPEFITTER.

I THE RATIO OF TERRAZZO FINISHER HOURS TO TERRAZZO WORKER HOURS SHALL NOT EXCEED TWO (2) TO ONE (1).

ALA-2014-2-INC

GENERAL PREVAILING WAGE DETERMINATION MADE BY THE DIRECTOR OF INDUSTRIAL RELATIONS
PURSUANT TO CALIFORNIA LABOR CODE PART 7, CHAPTER 1, ARTICLE 2, SECTIONS 1770, 1773 AND 1773.1
FOR COMMERCIAL BUILDING, HIGHWAY, HEAVY CONSTRUCTION AND DREDGING PROJECTS

LOCALITY: ALAMEDA COUNTY
DETERMINATION: ALA-2014-2

				EMPLOYER PAYMENTS						STRAIGHT-TIME		OVERTIME HOURLY RATE			CONTRACT PROVISIONS				
	CRAFT (JOURNEY LEVEL)	ISSUE DATE	EXPIRATION DATE	BASIC HOURLY RATE	HEALTH AND WELFARE	PENSION	VACATION/ HOLIDAY	TRAINING	OTHER PAYMENTS	HOURS	TOTAL HOURLY RATE	DAILY	SATURDAY	SUNDAY AND HOLIDAY	HOLIDAYS	SCOPE OF WORK	TRAVEL & SUBSISTENCE	SHIFT DIFFERENTIAL	PREDETERMINED INCREASE
#	**BRICKLAYER, BLOCKLAYER,**																		
	POINTER, CLEANER, CAULKER, WATERPROOFER (2ND SHIFT)	8/22/2014	06/30/2015*	A 48.390	9.690	10.520	B -	1.440	0.400	C 8.0	70.440	94.640	D 94.640	118.830	HOLIDAYS	SCOPE	TRAVEL	SHIFT	**NO INCREASE**
	POINTER, CLEANNER, CAULKER, WATERPROOFER (3RD SHIFT)	8/22/2014	06/30/2015*	A 50.500	9.690	10.520	B -	1.440	0.400	C 8.0	72.550	97.800	D 97.800	123.050	HOLIDAYS	SCOPE	TRAVEL	SHIFT	**NO INCREASE**
#	**BRICKLAYER, BLOCKLAYER:**																		
	BRICKLAYER, BLOCKLAYER, STONEMASON (2ND SHIFT)	8/22/2013	04/30/2014*	A 42.080	9.690	10.000	E 3.000	0.800	F 1.230	C 8.0	66.800	G 89.340	G 89.340	111.880	HOLIDAYS	SCOPE	TRAVEL	SHIFT	**NO INCREASE**
	BRICKLAYER, BLOCKLAYER, STONEMASON (3RD SHIFT)	8/22/2013	04/30/2014*	A 44.130	9.690	10.000	E 3.000	0.800	F 1.230	C 8.0	68.850	G 92.420	G 92.420	115.980	HOLIDAYS	SCOPE	TRAVEL	SHIFT	**NO INCREASE**
#	**ELECTRICIAN:**																		
	COMM & SYSTEM INSTALLER, SECOND SHIFT	2/22/2014	11/30/2014*	32.070	9.550	H 4.650	-	1.100	I 0.210	8.0	48.700	J 65.300	J 65.300	K 81.890	HOLIDAYS	SCOPE	TRAVEL	SHIFT	**NO INCREASE**
	COMM & SYSTEM INSTALLER, THIRD SHIFT	2/22/2014	11/30/2014*	32.320	9.550	H 4.650	-	1.100	I 0.210	8.0	48.960	J 65.680	J 65.680	K 82.410	HOLIDAYS	SCOPE	TRAVEL	SHIFT	**NO INCREASE**
	COMM & SYSTEM TECH., SECOND SHIFT	2/22/2014	11/30/2014*	36.410	9.550	H 4.650	-	1.100	I 0.210	8.0	53.190	J 72.030	J 72.030	K 90.870	HOLIDAYS	SCOPE	TRAVEL	SHIFT	**NO INCREASE**
	COMM & SYSTEM TECH., THIRD SHIFT	2/22/2014	11/30/2014*	36.660	9.550	H 4.650	-	1.100	I 0.210	8.0	53.450	J 72.420	J 72.420	K 91.390	HOLIDAYS	SCOPE	TRAVEL	SHIFT	**NO INCREASE**
	INSIDE WIREMAN, 2ND SHIFT	8/22/2014	05/31/2015**	57.670	16.440	L 13.460	B -	1.900	M 1.200	N 7.5	92.400	122.410	O 152.410	K 152.410	HOLIDAYS	SCOPE	TRAVEL	SHIFT	INCREASE
	INSIDE WIREMAN, 3RD SHIFT	8/22/2014	05/31/2015**	64.600	17.610	L 14.420	B -	2.040	M 1.270	P 7.0	101.880	135.490	O 169.100	K 169.100	HOLIDAYS	SCOPE	TRAVEL	SHIFT	INCREASE
	CABLE SPLICER-WELDER, 2ND SHIFT	8/22/2014	05/31/2015**	64.870	16.440	L 13.460	B -	1.900	M 1.280	N 7.5	99.900	133.650	O 167.400	K 167.400	HOLIDAYS	SCOPE	TRAVEL	SHIFT	INCREASE
	CABLE SPLICER-WELDER, 3RD SHIFT	8/22/2014	05/31/2015**	72.670	17.610	L 14.420	B -	2.040	M 1.360	P 7.0	110.280	148.090	O 185.900	K 185.900	HOLIDAYS	SCOPE	TRAVEL	SHIFT	INCREASE
#	**MARBLE FINISHER**																		
Q	MARBLE FINISHER (2ND SHIFT)	8/22/2013	07/31/2014*	R 33.050	9.690	3.870	S -	0.450	0.530	8.0	47.590	T 64.110	80.640	80.640	HOLIDAYS	SCOPE	TRAVEL	SHIFT	**NO INCREASE**
#	**MARBLE MASON**																		
Q	MARBLE MASON (2ND SHIFT)	8/22/2013	07/31/2014*	R 45.300	9.690	11.990	S -	0.800	0.730	8.0	68.510	T 91.160	113.810	113.810	HOLIDAYS	SCOPE	TRAVEL	SHIFT	**NO INCREASE**
#	**PLASTERER**																		
	PLASTERER: 2ND SHIFT	8/22/2014	06/30/2015**	U 38.480	12.530	10.630	B -	1.050	0.900	V 7.0	63.590	W 80.260	W 80.260	96.930	HOLIDAYS	SCOPE	TRAVEL	SHIFT	INCREASE
	PLASTERER: 3RD SHIFT	8/22/2014	06/30/2015**	U 39.480	12.530	10.630	B -	1.050	0.900	V 7.0	64.590	W 81.760	W 81.760	98.930	HOLIDAYS	SCOPE	TRAVEL	SHIFT	INCREASE
#	**TERRAZZO FINISHER**																		
X	TERRAZZO FINISHER, 2ND SHIFT	8/22/2014	06/30/2015**	Y 38.190	9.690	5.120	B -	0.800	0.490	8.0	54.290	Z 71.280	Z 71.280	88.280	HOLIDAYS	SCOPE	TRAVEL	SHIFT	INCREASE
X	TERRAZZO FINISHER, 3RD SHIFT	8/22/2014	06/30/2015**	Y 38.190	9.690	5.120	B -	0.800	0.490	8.0	54.290	Z 71.280	Z 71.280	88.280	HOLIDAYS	SCOPE	TRAVEL	SHIFT	INCREASE
#	**TERRAZZO WORKER**																		
X	TERRAZZO WORKER, 2ND SHIFT	8/22/2014	06/30/2015**	Y 48.420	9.690	14.420	B -	0.800	0.670	8.0	74.000	Z 95.540	Z 95.540	117.080	HOLIDAYS	SCOPE	TRAVEL	SHIFT	INCREASE
X	TERRAZZO WORKER, 3RD SHIFT	8/22/2014	06/30/2015**	Y 48.420	9.690	14.420	B -	0.800	0.670	8.0	74.000	Z 95.540	Z 95.540	117.080	HOLIDAYS	SCOPE	TRAVEL	SHIFT	INCREASE
#	**TILE FINISHER**																		
	TILE FINISHER, 2ND SHIFT	8/22/2014	03/31/2015**	AA 26.060	8.530	3.440	0.700	0.400	1.090	8.0	40.220	51.250	C 51.250	62.280	HOLIDAYS	SCOPE	TRAVEL	SHIFT	INCREASE
	TILE FINISHER - RED CIRCLED FINISHER, 2ND SHIFT	8/22/2014	03/31/2015**	AA 31.750	8.530	3.670	1.300	0.300	1.100	8.0	46.650	60.530	C 60.530	74.400	HOLIDAYS	SCOPE	TRAVEL	SHIFT	INCREASE
#	**TILE SETTER**																		
	TILE SETTER, 2ND SHIFT	8/22/2014	03/31/2015**	AA 43.240	8.530	4.670	2.350	0.590	1.680	8.0	61.060	80.180	C 80.180	99.300	HOLIDAYS	SCOPE	TRAVEL	SHIFT	INCREASE

FOOTNOTES

GENERAL PREVAILING WAGE DETERMINATION MADE BY THE DIRECTOR OF INDUSTRIAL RELATIONS
PURSUANT TO CALIFORNIA LABOR CODE PART 7, CHAPTER 1, ARTICLE 2, SECTIONS 1770, 1773 AND 1773.1

LOCALITY: ALAMEDA COUNTY

DETERMINATION: ALA-2014-2

* EFFECTIVE UNTIL SUPERSEDED BY A NEW DETERMINATION ISSUED BY THE DIRECTOR OF INDUSTRIAL RELATIONS. CONTACT THE OFFICE OF THE DIRECTOR - RESEARCH UNIT AT (415) 703-4774 FOR THE NEW RATES AFTER TEN DAYS AFTER THE EXPIRATION DATE IF NO SUBSEQUENT DETERMINATION IS ISSUED.

** THE RATE TO BE PAID FOR WORK PERFORMED AFTER THIS DATE HAS BEEN DETERMINED. IF WORK WILL EXTEND PAST THIS DATE, THE NEW RATE MUST BE PAID AND SHOULD BE INCORPORATED IN CONTRACTS ENTERED INTO NOW. CONTACT THE OFFICE OF THE DIRECTOR - RESEARCH UNIT FOR SPECIFIC RATES AT (415) 703-4774.

\# INDICATES AN APPRENTICEABLE CRAFT. THE CURRENT APPRENTICE WAGE RATES ARE AVAILABLE ON THE INTERNET @ HTTP://WWW.DIR.CA.GOV/OPRL/PWAPPWAGE/PWAPPWAGESTART.ASP. TO OBTAIN ANY APPRENTICE WAGE RATES AS OF JULY 1, 2008 AND PRIOR TO SEPTEMBER 27, 2012, PLEASE CONTACT THE DIVISION OF APPRENTICESHIP STANDARDS OR REFER TO THE DIVISION OF APPRENTICESHIP STANDARDS' WEBSITE AT HTTP://WWW.DIR.CA.GOV/DAS/DAS.HTML.

& THE BASIC HOURLY RATE AND EMPLOYER PAYMENTS ARE NOT TAKEN FROM A COLLECTIVE BARGAINING AGREEMENT FOR THIS CRAFT OR CLASSIFICATION.

A INCLUDES AMOUNT WITHHELD FOR DUES CHECK OFF.

B INCLUDED IN STRAIGHT-TIME HOURLY RATE.

C SATURDAYS IN THE SAME WORK WEEK MAY BE WORKED AT STRAIGHT-TIME IF JOB IS SHUT DOWN DURING THE NORMAL WORKWEEK DUE TO INCLEMENT WEATHER.

D RATE APPLIES TO THE FIRST 10 HOURS WORKED ON SATURDAY. ALL OTHER HOURS ARE PAID AT THE SUNDAY/HOLIDAY RATE.

E AMOUNT INCLUDED IN FACTORING OVERTIME RATES.

F INCLUDES AMOUNT FOR INDUSTRY PROMOTION FUND, INTERNATIONAL MASONRY INSTITUTE (IMI), AND LABOR MANAGEMENT COOPERATION COMMITTEE (LMCC)

G RATE APPLIES TO THE FIRST 2 DAILY OVERTIME HOURS AND THE FIRST 10 HOURS ON SATURDAY; ALL OTHER TIME IS PAID AT THE SUNDAY AND HOLIDAY OVERTIME HOURLY RATE.

H IN ADDITION, AN AMOUNT EQUAL TO 3% OF THE BASIC HOURLY RATE IS ADDED TO THE TOTAL HOURLY RATE AND OVERTIME HOURLY RATES FOR THE NATIONAL EMPLOYEES BENEFIT BOARD.

I IN ADDITION, AN AMOUNT EQUAL TO 0.5% OF THE BASIC HOURLY RATE, WHICH IS FACTORED AT THE APPLICABLE OVERTIME MULTIPLIER, IS ADDED TO THE TOTAL HOURLY RATE AND OVERTIME HOURLY RATES.

J RATE APPLIES TO THE FIRST 4 DAILY OVERTIME HOURS AND THE FIRST 8 HOURS WORKED ON SATURDAY. ALL OTHER TIME IS PAID AT THE SUNDAY AND HOLIDAY OVERTIME RATE.

K DISREGARD THIS RATE. USE THE SUNDAY AND HOLIDAY NON-SHIFT DIFFERENTIAL RATE FOR THIS CLASSIFICATION AS PUBLISHED IN THE DIRECTOR'S GENERAL PREVAILING WAGE DETERMINATIONS.

L IN ADDITION, AN AMOUNT EQUAL TO 3% OF THE BASIC HOURLY RATE IS ADDED TO THE TOTAL HOURLY RATE AND OVERTIME HOURLY RATES FOR THE NATIONAL EMPLOYEES BENEFIT BOARD. PURSUANT TO LABOR CODE SECTIONS 1773.1 AND 1773.8, THE AMOUNT PAID FOR THIS EMPLOYER PAYMENT MAY VARY RESULTING IN A LOWER TAXABLE BASIC HOURLY WAGE RATE, BUT THE TOTAL HOURLY RATES FOR STRAIGHT TIME AND OVERTIME MAY NOT BE LESS THAN THE GENERAL PREVAILING RATE OF PER DIEM WAGES.

M INCLUDES AN AMOUNT (1.05% OF THE BASIC HOURLY RATE) FOR THE CONTRACT ADMINISTRATION FUND, WHICH IS FACTORED AT THE APPLICABLE OVERTIME MULTIPLIER.

N 8 HOURS PAY FOR 7.5 HOURS WORKED AT THE STRAIGHT TIME BASIC HOURLY RATE

O DISREGARD THIS RATE. USE THE SATURDAY NON-SHIFT DIFFERENTIAL RATE FOR THIS CLASSIFICATION AS PUBLISHED IN THE DIRECTOR'S GENERAL PREVAILING WAGE DETERMINATIONS.

P 8 HOURS PAY FOR 7 HOURS WORKED AT THE STRAIGHT TIME BASIC HOURLY RATE.

Q EMPLOYEES WORKING ON ANY SUSPENDED PLATFORM/SCAFFOLD SHALL BE PAID AN ADDITIONAL $15.00 PER DAY ABOVE THE WAGE RATE.

R INCLUDES AN AMOUNT FOR DUES CHECK-OFF AND VACATION/HOLIDAY WHICH ARE FACTORED INTO OVERTIME RATES.

S INCLUDED IN BASIC HOURLY RATE.

T RATE APPLIES TO FIRST 2 OVERTIME HOURS MONDAY THROUGH FRIDAY; ALL OTHER OVERTIME IS PAID AT THE DOUBLE TIME RATE.

U INCLUDE AMOUNTS WITHHELD FOR DUES CHECK OFF AND VACATION WHICH IS NOT FACTORED INTO OVERTIME. EMPLOYEES OPERATING AND WORKING BEHIND PLASTER GUNS SHALL RECEIVE AN ADDITIONAL $5.00 PER DAY ABOVE THE WAGE RATE. EMPLOYEES WORKING ON AN EXTERIOR SUSPENDED SCAFFOLD SHALL BE PAID AN ADDITIONAL $10.00 PER DAY ABOVE THE WAGE RATE.

V 8 HOURS PAY FOR 7 HOURS WORKED AT STRAIGHT-TIME BASIC HOURLY RATE. SATURDAYS IN THE SAME WORK WEEK MAY BE WORKED AT STRAIGHT-TIME IF THE JOB IS SHUT DOWN DURING THE NORMAL WORK WEEK DUE TO INCLEMENT WEATHER.

W RATE APPLIES TO THE FIRST 2 OVERTIME HOURS MONDAY THROUGH FRIDAY AND THE FIRST 7 HOURS ON SATURDAYS AND DESIGNATED DAYS OFF. ALL OTHER TIME IS PAID AT THE SUNDAY AND HOLIDAY OVERTIME RATE.

X THE RATIO OF TERRAZZO FINISHER HOURS TO TERRAZZO WORKER HOURS SHALL NOT EXCEED TWO (2) TO ONE (1).

Y INCLUDES AN AMOUNT FOR VACATION/DUES CHECK OFF WHICH IS NOT FACTORED IN THE OVERTIME RATES.

Z RATE APPLIES TO THE FIRST 2 DAILY OVERTIME HOURS AND THE FIRST 8 HOURS ON SATURDAY ONLY; ALL OTHER TIME IS PAID AT THE SUNDAY AND HOLIDAY OVERTIME HOURLY RATE.

AA INCLUDES AMOUNT WITHHELD FOR DUES CHECK OFF, WHICH IS FACTORED IN THE OVERTIME RATES. INCLUDES AN AMOUNT OF PREMIUM RATE PER HOUR ABOVE THE REGULAR STRAIGHT-TIME RATE, WHICH IS NOT FACTORED IN THE OVERTIME RATES. ANY EMPLOYEE WORKING UNDERGROUND SHALL RECEIVE $1.00 PER HOUR IN ADDITION TO REGULAR WAGES.

RECOGNIZED HOLIDAYS: HOLIDAYS UPON WHICH THE GENERAL PREVAILING HOURLY WAGE RATE FOR HOLIDAY WORK SHALL BE PAID, SHALL BE ALL HOLIDAYS IN THE COLLECTIVE BARGAINING AGREEMENT, APPLICABLE TO THE PARTICULAR CRAFT, CLASSIFICATION, OR TYPE OF WORKER EMPLOYED ON THE PROJECT, WHICH IS ON FILE WITH THE DIRECTOR OF INDUSTRIAL RELATIONS. IF THE PREVAILING RATE IS NOT BASED ON A COLLECTIVELY BARGAINED RATE, THE HOLIDAYS UPON WHICH THE PREVAILING RATE SHALL BE PAID SHALL BE AS PROVIDED IN SECTION 6700 OF THE GOVERNMENT CODE. YOU MAY OBTAIN THE HOLIDAY PROVISIONS FOR THE CURRENT DETERMINATIONS ON THE INTERNET AT HTTP://WWW.DIR.CA.GOV/OPRL/PWD. HOLIDAY PROVISIONS FOR CURRENT OR SUPERSEDED DETERMINATIONS MAY BE OBTAINED BY CONTACTING THE OFFICE OF THE DIRECTOR - RESEARCH UNIT AT (415) 703-4774.

GENERAL PREVAILING WAGE DETERMINATION MADE BY THE DIRECTOR OF INDUSTRIAL RELATIONS
PURSUANT TO CALIFORNIA LABOR CODE PART 7, CHAPTER 1, ARTICLE 2, SECTIONS 1770, 1773 AND 1773.1

LOCALITY: ALAMEDA COUNTY

DETERMINATION: ALA-2014-2

TRAVEL AND/OR SUBSISTENCE PAYMENT: IN ACCORDANCE WITH LABOR CODE SECTIONS 1773.1 AND 1773.9, CONTRACTORS SHALL MAKE TRAVEL AND/OR SUBSISTENCE PAYMENTS TO EACH WORKER TO EXECUTE THE WORK. YOU MAY OBTAIN THE TRAVEL AND/OR SUBSISTENCE PROVISIONS FOR THE CURRENT DETERMINATIONS ON THE INTERNET @ HTTP://WWW.DIR.CA.GOV/OPRL/PWD. TRAVEL AND/OR SUBSISTENCE REQUIREMENTS FOR CURRENT OR SUPERSEDED DETERMINATIONS MAY BE OBTAINED FROM THE OFFICE OF THE DIRECTOR - RESEARCH UNIT AT (415) 703-4774.

ALA-2014-2-Determination

GENERAL PREVAILING WAGE DETERMINATION MADE AY THE DIRECTOR OF INDUSTRIAL RELATIONS

PURSUANT TO CALIFORNIA LAAOR CODE PART 7, CHAPTER 1, ARTICLE 2, SECTIONS 1770, 1773 AND 1773.1

FOR COMMERCIAL AUILDING, HIGHWAY, HEAVY CONSTRUCTION AND DREDGING PROJECTS

LOCALITY: ALAMEDA COUNTY

DETERMINATION: ALA-2014-2

				INCREASE 1		INCREASE 2		INCREASE 3		INCREASE 4		INCREASE 5		INCREASE 6		INCREASE 7	
	CRAFT (JOURNEY LEVEL)	ISSUE DATE	EXPIRATION DATE	DATE OF NEXT CHANGE	AMOUNT OF INCREASE	DATE OF NEXT CHANGE	AMOUNT OF INCREASE	DATE OF NEXT CHANGE	AMOUNT OF INCREASE	DATE OF NEXT CHANGE	AMOUNT OF INCREASE	DATE OF NEXT CHANGE	AMOUNT OF INCREASE	DATE OF NEXT CHANGE	AMOUNT OF INCREASE	DATE OF NEXT CHANGE	AMOUNT OF INCREASE
	ELECTRICIAN:																
	INSIDE WIREMAN, 2ND SHIFT	8/22/2014	05/31/2015**	6/1/2015	$3.25 A												
	INSIDE WIREMAN, 3RD SHIFT	8/22/2014	05/31/2015**	6/1/2015	$3.25 A												
	CABLE SPLICER-WELDER, 2ND SHIFT	8/22/2014	05/31/2015**	6/1/2015	$3.25 A												
	CABLE SPLICER-WELDER, 3RD SHIFT	8/22/2014	05/31/2015**	6/1/2015	$3.25 A												
	PLASTERER																
	PLASTERER: 2ND SHIFT	8/22/2014	06/30/2015**	7/1/2015	$1.70 A	7/1/2016	$1.70 A										
	PLASTERER: 3RD SHIFT	8/22/2014	06/30/2015**	7/1/2015	$1.70 A	7/1/2016	$1.70 A										
	TERRAZZO FINISHER																
B	TERRAZZO FINISHER, 2ND SHIFT	8/22/2014	06/30/2015**	7/1/2015	$0.75 A	7/1/2016	$1.00 A	7/1/2017	$1.00 A	7/1/2018	$1.25 A						
B	TERRAZZO FINISHER, 3RD SHIFT	8/22/2014	06/30/2015**	7/1/2015	$0.75 A	7/1/2016	$1.00 A	7/1/2017	$1.00 A	7/1/2018	$1.25 A						
	TERRAZZO WORKER																
B	TERRAZZO WORKER, 2ND SHIFT	8/22/2014	06/30/2015**	7/1/2015	$1.25 A	7/1/2016	$1.50 A	7/1/2017	$1.75 A	7/1/2018	$2.00 A						
B	TERRAZZO WORKER, 3RD SHIFT	8/22/2014	06/30/2015**	7/1/2015	$1.25 A	7/1/2016	$1.50 A	7/1/2017	$1.75 A	7/1/2018	$2.00 A						
	TILE FINISHER																
	TILE FINISHER, 2ND SHIFT	8/22/2014	03/31/2015**	4/1/2015	$1.14 A												
	TILE FINISHER - RED CIRCLED FINISHER, 2ND SHIFT	8/22/2014	03/31/2015**	4/1/2015	$1.14 A												
	TILE SETTER																
	TILE SETTER, 2ND SHIFT	8/22/2014	03/31/2015**	4/1/2015	$1.75 A												

FOOTNOTES

GENERAL PREVAILING WAGE DETERMINATION MADE BY THE DIRECTOR OF INDUSTRIAL RELATIONS

PURSUANT TO CALIFORNIA LABOR CODE PART 7, CHAPTER 1, ARTICLE 2, SECTIONS 1770, 1773 AND 1773.1

LOCALITY: ALAMEDA COUNTY

DETERMINATION: ALA-2014-2

A THE PREDETERMINED INCREASE SHOWN IS TO BE ALLOCATED TO WAGES AND/OR EMPLOYER PAYMENTS. PLEASE CONTACT THE OFFICE OF THE DIRECTOR - RESEARCH UNIT AT (415) 703-4774 WHEN THE PREDETERMINED INCREASE BECOMES DUE TO CONFIRM THE DISTRIBUTION. PLEASE ALSO EXAMINE THE IMPORTANT NOTICES TO SEE IF ANY MODIFICATIONS HAVE BEEN ISSUED, AS THERE MAY BE REDUCTIONS TO PREDETERMINED INCREASES.

B THE RATIO OF TERRAZZO FINISHER HOURS TO TERRAZZO WORKER HOURS SHALL NOT EXCEED TWO (2) TO ONE (1).

ALA-2014-2-INC

GENERAL PREVAILING WAGE DETERMINATION MADE BY THE DIRECTOR OF INDUSTRIAL RELATIONS
PURSUANT TO CALIFORNIA LABOR CODE PART 7, CHAPTER 1, ARTICLE 2, SECTIONS 1770, 1773 AND 1773.1
FOR COMMERCIAL BUILDING, HIGHWAY, HEAVY CONSTRUCTION AND DREDGING PROJECTS

LOCALITY: CONTRA COSTA COUNTY
DETERMINATION: CON-2014-2

				EMPLOYER PAYMENTS						STRAIGHT-TIME		OVERTIME HOURLY RATE			CONTRACT PROVISIONS			
	CRAFT (JOURNEY LEVEL)	ISSUE DATE	EXPIRATION DATE	BASIC HOURLY RATE	HEALTH AND WELFARE	PENSION	VACATION/ HOLIDAY	TRAINING	OTHER PAYMENTS	HOURS	TOTAL HOURLY RATE	DAILY	SATURDAY	SUNDAY AND HOLIDAY	HOLIDAYS	SCOPE OF WORK	TRAVEL & SUBSISTENCE	PREDETERMINED INCREASE
#	**BRICKLAYER, BLOCKLAYER:**																	
	BRICKLAYER, BLOCKLAYER, STONEMASON	8/22/2013	04/30/2014*	A 37.980	9.690	10.000	B 3.000	0.800	C 1.230	D 8.0	62.700	E 83.190	E 83.190	103.680	HOLIDAYS	SCOPE	TRAVEL	**NO INCREASE**
	POINTER, CLEANER, CAULKER, WATERPROOFER	8/22/2014	06/30/2015*	A 42.080	9.690	10.520	F -	1.440	0.400	D 8.0	64.130	85.170	G 85.170	106.210	HOLIDAYS	SCOPE	TRAVEL	**NO INCREASE**
#	**BRICK TENDER**	8/22/2013	04/30/2014*	A 32.130	9.500	9.900	F -	0.340	-	8.0	51.870	H 67.930	H 67.930	84.000	HOLIDAYS	SCOPE	TRAVEL	**NO INCREASE**
#	**CARPET, LINOLEUM,**																	
	SOFT FLOOR LAYER	8/22/2014	06/30/2015*	A 44.820	9.700	8.050	I -	0.530	0.340	8.0	63.440	J 85.850	J 85.850	108.260	HOLIDAYS	SCOPE	TRAVEL	**NO INCREASE**
	FLOOR COVERING HANDLER AFTER 3 YEARS	8/22/2014	06/30/2015*	A 22.390	9.700	4.030	I -	0.050	0.340	8.0	36.510	J 47.700	J 47.700	58.900	HOLIDAYS	SCOPE	TRAVEL	**NO INCREASE**
	FLOOR COVERING HANDLER LESS THAN 3 YEARS	8/22/2014	06/30/2015*	A 17.900	9.700	3.220	I -	0.050	0.340	8.0	31.210	J 40.160	J 40.160	49.110	HOLIDAYS	SCOPE	TRAVEL	**NO INCREASE**
	FLOOR COVERING HANDLER TRAINEE, FIRST 3 MONTHS	8/22/2014	06/30/2015*	A 14.310	9.700	2.580	I -	0.050	0.340	8.0	26.980	J 34.140	J 34.140	41.290	HOLIDAYS	SCOPE	TRAVEL	**NO INCREASE**
	FLOOR COVERING HANDLER TRAINEE, SECOND 3 MONTHS	8/22/2014	06/30/2015*	A 16.110	9.700	2.900	I -	0.050	0.340	8.0	29.100	J 37.160	J 37.160	45.210	HOLIDAYS	SCOPE	TRAVEL	**NO INCREASE**
#	**ELECTRICIAN:**																	
	COMM & SYSTEM INSTALLER	2/22/2014	11/30/2014*	31.320	9.550	K 4.650	-	1.100	L 0.210	8.0	47.930	M 64.140	M 64.140	80.350	HOLIDAYS	SCOPE	TRAVEL	**NO INCREASE**
	COMM & SYSTEM TECH.	2/22/2014	11/30/2014*	35.660	9.550	K 4.650	-	1.100	L 0.210	8.0	52.420	M 70.870	M 70.870	89.330	HOLIDAYS	SCOPE	TRAVEL	**NO INCREASE**
	INSIDE WIREMAN, TECHNICIAN	8/22/2014	05/31/2015*	A 45.260	13.100	K 10.000	-	0.670	N 0.810	8.0	71.200	O 94.510	O 94.510	117.820	HOLIDAYS	SCOPE	TRAVEL	**NO INCREASE**
	CABLE SPLICER	8/22/2014	05/31/2015*	A 51.670	13.100	K 10.000	-	0.670	N 0.810	8.0	77.800	O 104.410	O 104.410	131.020	HOLIDAYS	SCOPE	TRAVEL	**NO INCREASE**
#	**FIELD SURVEYOR:**																	
P	CHIEF OF PARTY	2/22/2014	02/28/2015*	37.290	12.530	Q 10.000	R 3.380	0.720	0.160	8.0	64.080	S 82.720	T 82.720	101.370	HOLIDAYS	SCOPE	TRAVEL	**NO INCREASE**
P	INSTRUMENTMAN	2/22/2014	02/28/2015*	34.200	12.530	Q 10.000	R 3.380	0.720	0.160	8.0	60.990	S 78.090	T 78.090	95.190	HOLIDAYS	SCOPE	TRAVEL	**NO INCREASE**
P	CHAINMAN/RODMAN	2/22/2014	02/28/2015*	31.320	12.530	Q 10.000	R 3.380	0.720	0.160	8.0	58.110	S 73.770	T 73.770	89.430	HOLIDAYS	SCOPE	TRAVEL	**NO INCREASE**
#	**GLAZIER**	8/22/2014	06/30/2015*	A 41.830	9.700	U 12.140	-	0.500	V 0.380	8.0	64.550	W 85.470	106.380	106.380	HOLIDAYS	SCOPE	TRAVEL	**NO INCREASE**
# X	**MARBLE FINISHER**	8/22/2013	07/31/2014*	Y 28.050	9.690	3.870	I -	0.450	0.530	8.0	42.590	Z 56.610	70.640	70.640	HOLIDAYS	SCOPE	TRAVEL	**NO INCREASE**
# X	**MARBLE MASON**	8/22/2013	07/31/2014*	Y 39.300	9.690	11.990	I -	0.800	0.730	8.0	62.510	Z 82.160	101.810	101.810	HOLIDAYS	SCOPE	TRAVEL	**NO INCREASE**
#	**PAINTER:**																	
	BRUSH AND SPRAY	2/22/2014	06/30/2014*	AA 34.830	9.700	Q 10.680	I -	0.410	0.380	D 8.0	56.000	73.420	AB 73.420	90.830	HOLIDAYS	SCOPE	TRAVEL	**NO INCREASE**
	INDUSTRIAL PAINTER	2/22/2014	06/30/2014*	AA 35.080	9.700	Q 10.680	I -	0.410	0.380	D 8.0	56.250	73.790	AB 73.790	91.330	HOLIDAYS	SCOPE	TRAVEL	**NO INCREASE**
	SANDBLASTER, STEAM CLEANER, WATERBLASTER	2/22/2014	06/30/2014*	AA 35.330	9.700	Q 10.680	I -	0.410	0.380	D 8.0	56.500	74.170	AB 74.170	91.830	HOLIDAYS	SCOPE	TRAVEL	**NO INCREASE**
	EXOTIC MATERIALS	2/22/2014	06/30/2014*	AA 35.580	9.700	Q 10.680	I -	0.410	0.380	D 8.0	56.750	74.540	AB 74.540	92.330	HOLIDAYS	SCOPE	TRAVEL	**NO INCREASE**
	PAPERHANGER/WALLCOVERING	2/22/2014	06/30/2014*	AA 35.830	9.700	Q 10.680	I -	0.410	0.380	D 8.0	57.000	74.920	AB 74.920	92.830	HOLIDAYS	SCOPE	TRAVEL	**NO INCREASE**
	TAPER	8/22/2014	06/30/2015*	AC 40.320	9.700	10.540	AD -	0.360	0.290	8.0	61.210	77.910	D 77.910	AB 94.620	HOLIDAYS	SCOPE	TRAVEL	**NO INCREASE**
AE	TAPER CLEAN-UP	8/22/2014	06/30/2015*	AF 16.100	9.700	-	-	-	-	8.0	25.800	33.360	D 33.360	AB 40.920	HOLIDAYS	SCOPE	TRAVEL	**NO INCREASE**
#	**PLASTERER**	8/22/2014	06/30/2015**	AG 37.480	12.530	10.630	F -	1.050	0.900	D 8.0	62.590	AH 78.760	AH 78.760	94.930	HOLIDAYS	SCOPE	TRAVEL	INCREASE
# AI	**PLASTER TENDER**	8/22/2014	06/30/2015**	AJ 32.400	9.080	12.420	F -	0.340	0.580	8.0	54.820	AK 68.470	AK 68.470	82.120	HOLIDAYS	SCOPE	TRAVEL	INCREASE
AI	GUN MAN	8/22/2014	06/30/2015**	AJ 33.150	9.080	12.420	F -	0.340	0.580	8.0	55.570	AK 69.600	AK 69.600	83.620	HOLIDAYS	SCOPE	TRAVEL	INCREASE
#	**PLUMBER:**																	
	PLUMBER, PIPE FITTER & REFRIGERATION FITTER (HVAC)	8/22/2014	06/30/2015**	A 51.770	17.360	AL 14.530	-	1.750	1.700	8.0	87.110	E 112.990	E 112.990	138.880	HOLIDAYS	SCOPE	TRAVEL	INCREASE
	SERVICE TECHNICIAN	8/22/2014	06/30/2015**	A 50.880	17.360	AL 14.530	-	1.750	1.700	8.0	86.220	111.660	AM 111.660	111.660	HOLIDAYS	SCOPE	TRAVEL	INCREASE
	STEAMFITTER	8/22/2014	06/30/2015*	A 54.710	AL 16.550	AN 12.840	-	3.700	0.300	8.0	91.100	E 120.210	E 120.210	149.320	HOLIDAYS	SCOPE	TRAVEL	**NO INCREASE**
	UNDERGROUND UTILITY PIPEFITTER	8/22/2014	06/30/2015**	26.550	5.800	AL 3.000	2.000	0.450	0.600	D 8.0	38.400	51.670	51.670	64.950	HOLIDAYS	SCOPE	TRAVEL	INCREASE
	LANDSCAPE PIPEFITTER	8/22/2014	06/30/2015**	26.550	5.800	AL 3.000	2.000	0.450	0.600	D 8.0	38.400	51.670	51.670	64.950	HOLIDAYS	SCOPE	TRAVEL	INCREASE
AO	UNDERGROUND UTILITY ASSISTANT JOURNEYMAN	8/22/2014	06/30/2015**	15.550	5.800	AL 3.000	2.000	0.450	0.600	D 8.0	27.400	35.170	35.170	42.950	HOLIDAYS	SCOPE	TRAVEL	INCREASE
AO	LANDSCAPE ASSISTANT JOURNEYMAN	8/22/2014	06/30/2015**	15.550	5.800	AL 3.000	2.000	0.450	0.600	D 8.0	27.400	35.170	35.170	42.950	HOLIDAYS	SCOPE	TRAVEL	INCREASE
AP	UNDERGROUND UTILITY TRADESMAN	8/22/2014	06/30/2015**	10.850	5.800	AL 3.000	2.000	0.450	0.600	D 8.0	22.700	28.130	28.130	33.550	HOLIDAYS	SCOPE	TRAVEL	INCREASE
AQ	LANDSCAPE TRADESMAN I	8/22/2014	06/30/2015**	10.500	5.800	AL -	2.000	0.450	0.600	D 8.0	19.350	24.600	24.600	29.850	HOLIDAYS	SCOPE	TRAVEL	INCREASE
AQ	LANDSCAPE TRADESMAN II	8/22/2014	06/30/2015**	10.850	5.800	AL 3.000	2.000	0.450	0.600	D 8.0	22.700	28.130	28.130	33.550	HOLIDAYS	SCOPE	TRAVEL	INCREASE
	SPRINKLER FITTER (FIRE PROTECTION AND FIRE CONTROL SYSTEMS)	2/22/2014	07/31/2014*	A 52.420	8.770	15.500	F -	1.100	0.400	8.0	78.190	104.400	104.400	130.610	HOLIDAYS	SCOPE	TRAVEL	**NO INCREASE**
#	**ROOFER**	8/22/2014	07/31/2015*	31.550	8.140	5.230	3.510	0.550	0.440	D 8.0	49.420	J 65.190	J 65.190	80.970	HOLIDAYS	SCOPE	TRAVEL	**NO INCREASE**
	BITUMASTIC, ENAMELER, PIPE WRAPPER, COAL TAR PITCH BUILD-UP	8/22/2014	07/31/2015*	33.550	8.140	5.230	3.510	0.550	0.440	D 8.0	51.420	J 68.190	J 68.190	84.970	HOLIDAYS	SCOPE	TRAVEL	**NO INCREASE**
	MASTIC WORKER, KETTLEMAN	8/22/2014	07/31/2015*	31.800	8.140	5.230	3.510	0.550	0.440	D 8.0	49.670	J 65.570	J 65.570	81.470	HOLIDAYS	SCOPE	TRAVEL	**NO INCREASE**
#	**SHEET METAL WORKER**	8/22/2014	06/30/2015*	AA 54.850	AR 13.110	AL 21.120	F -	1.410	1.150	8.0	91.640	O 119.060	O 119.060	146.490	HOLIDAYS	SCOPE	TRAVEL	**NO INCREASE**
	TOTAL SHEET METAL CONTRACT OF $200,000 OR LESS	8/22/2014	06/30/2015*	AA 48.790	AR 13.110	AL 20.500	F -	1.410	1.150	8.0	84.960	O 109.350	O 109.350	133.750	HOLIDAYS	SCOPE	TRAVEL	**NO INCREASE**

GENERAL PREVAILING WAGE DETERMINATION MADE BY THE DIRECTOR OF INDUSTRIAL RELATIONS
PURSUANT TO CALIFORNIA LABOR CODE PART 7, CHAPTER 1, ARTICLE 2, SECTIONS 1770, 1773 AND 1773.1
FOR COMMERCIAL BUILDING, HIGHWAY, HEAVY CONSTRUCTION AND DREDGING PROJECTS

LOCALITY: CONTRA COSTA COUNTY
DETERMINATION: CON-2014-2

				EMPLOYER PAYMENTS						STRAIGHT-TIME		OVERTIME HOURLY RATE			CONTRACT PROVISIONS			
	CRAFT (JOURNEY LEVEL)	ISSUE DATE	EXPIRATION DATE	BASIC HOURLY RATE	HEALTH AND WELFARE	PENSION	VACATION/ HOLIDAY	TRAINING	OTHER PAYMENTS	HOURS	TOTAL HOURLY RATE	DAILY	SATURDAY	SUNDAY AND HOLIDAY	HOLIDAYS	SCOPE OF WORK	TRAVEL & SUBSISTENCE	PREDETERMINED INCREASE
	SERVICE MECHANIC (TOTAL SHEET METAL CONTRACT OF $200,000 OR LESS)	8/22/2014	06/30/2015*	AA 35.840	AS 12.590	AL 13.060	F -	1.310	1.150	8.0	63.950	AT 81.870	AT 81.870	99.790	HOLIDAYS	SCOPE	TRAVEL	NO INCREASE
	SERVICE TECHNICIAN (TOTAL SHEET METAL CONTRACT OF $200,000 OR LESS)	8/22/2014	06/30/2015*	AA 31.550	AS 12.590	AL 8.930	F -	1.310	1.150	8.0	55.530	AT 71.300	AT 71.300	87.080	HOLIDAYS	SCOPE	TRAVEL	NO INCREASE
	AIR CONDITIONING SPECIALIST (TOTAL SHEET METAL CONTRACT OF $200,000 OR LESS)	8/22/2014	06/30/2015*	AA 28.320	AS 12.590	AL 3.770	F -	1.290	1.150	8.0	47.120	O 61.280	O 61.280	75.440	HOLIDAYS	SCOPE	TRAVEL	NO INCREASE
	AIR CONDITIONING JOURNEYMAN (TOTAL SHEET METAL CONTRACT OF $200,000 OR LESS)	8/22/2014	06/30/2015*	AA 33.130	AR 12.610	AL 8.770	F -	1.290	1.150	8.0	56.950	O 73.510	O 73.510	90.080	HOLIDAYS	SCOPE	TRAVEL	NO INCREASE
	METAL DECK & SIDING	8/22/2014	12/31/2014*	AA 33.860	AL 13.530	18.000	F -	AU 0.300	-	8.0	65.690	O 82.620	O 82.620	99.550	HOLIDAYS	SCOPE	TRAVEL	NO INCREASE
# AV	**TERRAZZO FINISHER**	8/22/2014	06/30/2015**	AC 33.190	9.690	5.120	F -	0.800	0.490	8.0	49.290	O 63.780	O 63.780	78.280	HOLIDAYS	SCOPE	TRAVEL	INCREASE
# AV	**TERRAZZO WORKER**	8/22/2014	06/30/2015**	AC 40.420	9.690	14.420	F -	0.800	0.670	8.0	66.000	O 83.540	O 83.540	101.080	HOLIDAYS	SCOPE	TRAVEL	INCREASE
#	**TILE FINISHER**	8/22/2014	03/31/2015**	AW 22.060	8.530	3.440	0.700	0.400	1.090	8.0	36.220	47.250	D 47.250	58.280	HOLIDAYS	SCOPE	TRAVEL	INCREASE
	RED CIRCLED FINISHER	8/22/2014	03/31/2015**	AW 27.750	8.530	3.670	1.300	0.300	1.100	8.0	42.650	56.530	D 56.530	70.400	HOLIDAYS	SCOPE	TRAVEL	INCREASE
#	**TILE SETTER**	8/22/2014	03/31/2015**	AW 38.240	8.530	4.670	2.350	0.590	1.680	8.0	56.060	75.180	D 75.180	94.300	HOLIDAYS	SCOPE	TRAVEL	INCREASE
	WATER WELL DRILLER																	
	DRILLER, PUMP REPAIRMAN	8/22/2007	01/31/2008*	20.170	8.120	3.690	AX 0.800	-	-	8.0	32.780	AY 42.870	AY 42.870	AY 42.870	HOLIDAYS	SCOPE	TRAVEL	NO INCREASE
	PUMP INSTALLER	8/22/2007	01/31/2008*	17.860	8.120	3.690	AZ 0.720	-	-	8.0	30.390	AY 39.320	AY 39.320	AY 39.320	HOLIDAYS	SCOPE	TRAVEL	NO INCREASE
	HELPER	8/22/2007	01/31/2008*	12.470	8.120	3.690	BA 0.530	-	-	8.0	24.810	AY 31.040	AY 31.040	AY 31.040	HOLIDAYS	SCOPE	TRAVEL	NO INCREASE

FOOTNOTES

GENERAL PREVAILING WAGE DETERMINATION MADE BY THE DIRECTOR OF INDUSTRIAL RELATIONS

PURSUANT TO CALIFORNIA LABOR CODE PART 7, CHAPTER 1, ARTICLE 2, SECTIONS 1770, 1773 AND 1773.1

LOCALITY: CONTRA COSTA COUNTY

DETERMINATION: CON-2014-2

*	EFFECTIVE UNTIL SUPERSEDED BY A NEW DETERMINATION ISSUED BY THE DIRECTOR OF INDUSTRIAL RELATIONS. CONTACT THE OFFICE OF THE DIRECTOR - RESEARCH UNIT AT (415) 703-4774 FOR THE NEW RATES AFTER TEN DAYS AFTER THE EXPIRATION DATE IF NO SUBSEQUENT DETERMINATION IS ISSUED.
**	THE RATE TO BE PAID FOR WORK PERFORMED AFTER THIS DATE HAS BEEN DETERMINED. IF WORK WILL EXTEND PAST THIS DATE, THE NEW RATE MUST BE PAID AND SHOULD BE INCORPORATED IN CONTRACTS ENTERED INTO NOW. CONTACT THE OFFICE OF THE DIRECTOR - RESEARCH UNIT FOR SPECIFIC RATES AT (415) 703-4774.
#	INDICATES AN APPRENTICEABLE CRAFT. THE CURRENT APPRENTICE WAGE RATES ARE AVAILABLE ON THE INTERNET @ HTTP://WWW.DIR.CA.GOV/OPRL/PWAPPWAGE/PWAPPWAGESTART.ASP. TO OBTAIN ANY APPRENTICE WAGE RATES AS OF JULY 1, 2008 AND PRIOR TO SEPTEMBER 27, 2012, PLEASE CONTACT THE DIVISION OF APPRENTICESHIP STANDARDS OR REFER TO THE DIVISION OF APPRENTICESHIP STANDARDS' WEBSITE AT HTTP://WWW.DIR.CA.GOV/DAS/DAS.HTML.
&	THE BASIC HOURLY RATE AND EMPLOYER PAYMENTS ARE NOT TAKEN FROM A COLLECTIVE BARGAINING AGREEMENT FOR THIS CRAFT OR CLASSIFICATION.
A	INCLUDES AMOUNT WITHHELD FOR DUES CHECK OFF.
B	AMOUNT INCLUDED IN FACTORING OVERTIME RATES.
C	INCLUDES AMOUNT FOR INDUSTRY PROMOTION FUND, INTERNATIONAL MASONRY INSTITUTE (IMI), AND LABOR MANAGEMENT COOPERATION COMMITTEE (LMCC)
D	SATURDAYS IN THE SAME WORK WEEK MAY BE WORKED AT STRAIGHT-TIME IF JOB IS SHUT DOWN DURING THE NORMAL WORKWEEK DUE TO INCLEMENT WEATHER.
E	RATE APPLIES TO THE FIRST 2 DAILY OVERTIME HOURS AND THE FIRST 10 HOURS ON SATURDAY; ALL OTHER TIME IS PAID AT THE SUNDAY AND HOLIDAY OVERTIME HOURLY RATE.
F	INCLUDED IN STRAIGHT-TIME HOURLY RATE.
G	RATE APPLIES TO THE FIRST 10 HOURS WORKED ON SATURDAY. ALL OTHER HOURS ARE PAID AT THE SUNDAY/HOLIDAY RATE.
H	RATE APPLIES TO THE FIRST 2 DAILY OVERTIME HOURS AND THE FIRST 8 HOURS ON SATURDAY ONLY. ALL OTHER TIME IS PAID AT THE SUNDAY AND HOLIDAY OVERTIME HOURLY RATE. SATURDAYS IN THE SAME WORK WEEK MAY BE WORKED AT STRAIGHT-TIME IF JOB IS SHUT DOWN DURING THE NORMAL WORKWEEK DUE TO INCLEMENT WEATHER.
I	INCLUDED IN BASIC HOURLY RATE.
J	RATE APPLIES TO THE FIRST 4 DAILY OVERTIME HOURS AND THE FIRST 12 HOURS WORKED ON SATURDAY; ALL OTHER TIME IS PAID AT THE SUNDAY AND HOLIDAY OVERTIME HOURLY RATE.
K	IN ADDITION, AN AMOUNT EQUAL TO 3% OF THE BASIC HOURLY RATE IS ADDED TO THE TOTAL HOURLY RATE AND OVERTIME HOURLY RATES FOR THE NATIONAL EMPLOYEES BENEFIT BOARD.
L	IN ADDITION, AN AMOUNT EQUAL TO 0.5% OF THE BASIC HOURLY RATE, WHICH IS FACTORED AT THE APPLICABLE OVERTIME MULTIPLIER, IS ADDED TO THE TOTAL HOURLY RATE AND OVERTIME HOURLY RATES.
M	RATE APPLIES TO THE FIRST 4 DAILY OVERTIME HOURS AND THE FIRST 8 HOURS WORKED ON SATURDAY. ALL OTHER TIME IS PAID AT THE SUNDAY AND HOLIDAY OVERTIME RATE.
N	AMOUNT IS FOR INDUSTRY FUND.
O	RATE APPLIES TO THE FIRST 2 DAILY OVERTIME HOURS AND THE FIRST 8 HOURS ON SATURDAY ONLY; ALL OTHER TIME IS PAID AT THE SUNDAY AND HOLIDAY OVERTIME HOURLY RATE.
P	ALL CREWS, WITHOUT CONSIDERATION TO THE NUMBER OF INDIVIDUALS IN THE CREW, SHALL INCLUDE A CHIEF OF PARTY. A CREW CONSISTS OF ONE (1) OR MORE EMPLOYEES PERFORMING FIELD AND CONSTRUCTION SURVEY WORK.
Q	INCLUDES AN AMOUNT PER HOUR WORKED FOR ANNUITY TRUST FUND.
R	INCLUDES AN AMOUNT PER HOUR WORKED FOR SUPPLEMENTAL DUES.
S	RATE APPLIES TO THE FIRST 4 DAILY OVERTIME HOURS, MONDAY THROUGH FRIDAY. ALL OTHER OVERTIME IS PAID AT THE SUNDAY/HOLIDAY RATE.
T	RATE APPLIES TO THE FIRST 12 OVERTIME HOURS WORKED. ALL OTHER OVERTIME IS PAID AT THE SUNDAY/HOLIDAY RATE. IN THE EVENT IT IS NOT REASONABLY POSSIBLE TO COMPLETE 40 HOURS OF WORK ON AN 8 HOUR DAY, MONDAY THROUGH FRIDAY, THEN THE BALANCE OF THE 40 HOURS, UP TO 8 HOURS, MAY BE WORKED ON SATURDAY AT THE STRAIGHT-TIME RATE.
U	INCLUDES AN AMOUNT PER HOUR WORKED FOR IUPAT, IARP, AND RETIREE PENSION.
V	INCLUDES AMOUNTS FOR INDUSTRY FUND, WORK PRESERVATION FUND, AND LABOR MANAGEMENT COOPERATION INITIATIVE
W	RATE APPLIES TO THE FIRST 2 DAILY OVERTIME HOURS AND FIRST 8 HOURS WORKED ON DESIGNATED DAYS OFF; ALL OTHER TIME IS PAID AT THE SATURDAY, SUNDAY AND HOLIDAY OVERTIME RATE.
X	EMPLOYEES WORKING ON ANY SUSPENDED PLATFORM/SCAFFOLD SHALL BE PAID AN ADDITIONAL $15.00 PER DAY ABOVE THE WAGE RATE.
Y	INCLUDES AN AMOUNT FOR DUES CHECK-OFF AND VACATION/HOLIDAY WHICH ARE FACTORED INTO OVERTIME RATES.
Z	RATE APPLIES TO FIRST 2 OVERTIME HOURS MONDAY THROUGH FRIDAY; ALL OTHER OVERTIME IS PAID AT THE DOUBLE TIME RATE.
AA	INCLUDES AMOUNT FOR VAC/HOL AND DUES CHECK OFF.
AB	DESIGNATED DAYS OFF SHALL BE PAID AT THE SATURDAY OVERTIME RATE; PLEASE REFER TO THE HOLIDAY PROVISIONS FOR A LIST OF DESIGNATED DAYS OFF.
AC	INCLUDES AN AMOUNT FOR VACATION/DUES CHECK OFF WHICH IS NOT FACTORED IN THE OVERTIME RATES.
AD	INCLUDED IN STRAIGHT-TIME HOURLY RATE WHICH IS NOT FACTORED IN THE OVERTIME RATES.
AE	PLEASE NOTE THAT THE TAPER CLEAN-UP APPLIES ONLY TO THE TAPER CLASSIFICATION.
AF	INCLUDES AN AMOUNT WITHHELD FOR DUES CHECK OFF WHICH IS NOT FACTORED IN OVERTIME AND HOLIDAY WAGE RATES.
AG	INCLUDE AMOUNTS WITHHELD FOR DUES CHECK OFF AND VACATION WHICH IS NOT FACTORED INTO OVERTIME. EMPLOYEES OPERATING AND WORKING BEHIND PLASTER GUNS SHALL RECEIVE AN ADDITIONAL $5.00 PER DAY ABOVE THE WAGE RATE. EMPLOYEES WORKING ON AN EXTERIOR SUSPENDED SCAFFOLD SHALL BE PAID AN ADDITIONAL $10.00 PER DAY ABOVE THE WAGE RATE.
AH	RATE APPLIES TO THE FIRST 4 OVERTIME HOURS MONDAY THROUGH FRIDAY AND THE FIRST 8 HOURS WORKED ON SATURDAYS AND DESIGNATED DAYS OFF. ALL OTHER TIME IS PAID AT THE SUNDAY AND HOLIDAY OVERTIME RATE.
AI	ALL HOD CARRIERS WORKING ON THE HOSE SHALL RECEIVE $5.00 PER DAY OVER SCALE.
AJ	INCLUDES AN AMOUNT FOR VACATION, DUES CHECK-OFF AND ORGANIZING DUES WHICH ARE NOT FACTORED INTO OVERTIME.
AK	RATE APPLIES TO THE FIRST 4 OVERTIME HOURS MONDAY THROUGH FRIDAY AND THE FIRST 8 HOURS WORKED ON SATURDAY. ALL OTHER TIME IS PAID AT THE SUNDAY AND HOLIDAY OVERTIME RATE.
AL	PURSUANT TO LABOR CODE SECTIONS 1773.1 AND 1773.8, THE AMOUNT PAID FOR THIS EMPLOYER PAYMENT MAY VARY RESULTING IN A LOWER TAXABLE BASIC HOURLY WAGE RATE, BUT THE TOTAL HOURLY RATES FOR STRAIGHT TIME AND OVERTIME MAY NOT BE LESS THAN THE GENERAL PREVAILING RATE OF PER DIEM WAGES.
AM	SATURDAY MAY BE PAID AT STRAIGHT TIME IF THE WORK WEEK IS TUESDAY THROUGH SATURDAY.
AN	IN ADDITION, AN AMOUNT OF $3.00 FOR 401A SUPPLEMENTAL PENSION, WHICH IS FACTORED AT THE APPLICABLE OVERTIME MULTIPLIER, IS ADDED TO THE TOTAL HOURLY RATE AND OVERTIME HOURLY RATE. PURSUANT TO LABOR CODE SECTIONS 1773.1 AND 1773.8, THE AMOUNT PAID FOR THIS EMPLOYER PAYMENT MAY VARY RESULTING IN A LOWER TAXABLE BASIC HOURLY WAGE RATE, BUT THE TOTAL HOURLY RATES FOR STRAIGHT TIME AND OVERTIME MAY NOT BE LESS THAN THE GENERAL PREVAILING RATE OF PER DIEM WAGES.

AO THERE MUST BE AT LEAST ONE JOURNEYMAN PIPEFITTER PER CONTRACTOR ON EACH JOBSITE.

AP THERE SHALL BE NO MORE THAN THREE TRADESMEN TO EVERY TWO JOURNEYMAN PIPEFITTER/ASSISTANT JOURNEYMAN PIPEFITTER COMBINATION EMPLOYED PER CONTRACTOR ON EACH JOBSITE.

AQ THERE SHALL BE NO MORE THAN FOUR TRADESMEN TO EVERY TWO JOURNEYMAN PIPEFITTER/ASSISTANT JOURNEYMAN PIPEFITTER COMBINATION EMPLOYED PER CONTRACTOR ON EACH JOBSITE. MAINTENANCE WORK, BOTH DURING AND AFTER THE PLANT ESTABLISHMENT PERIOD, MAY BE PERFORMED BY LANDSCAPE TRADESMEN WITHOUT THE SUPERVISION OF A JOURNEYMAN PIPEFITTER.

AR INCLUDES SMOHIT AND SHC. EFFECTIVE 1/1/2013, PURSUANT TO LABOR CODE SECTIONS 1773.1 AND 1773.8, THE AMOUNT PAID FOR THIS EMPLOYER PAYMENT MAY VARY RESULTING IN A LOWER TAXABLE BASIC HOURLY WAGE RATE, BUT THE TOTAL HOURLY RATES FOR STRAIGHT TIME AND OVERTIME MAY NOT BE LESS THAN THE GENERAL PREVAILING RATE OF PER DIEM WAGES.

AS INCLUDES SHC. EFFECTIVE 1/1/2013, PURSUANT TO LABOR CODE SECTIONS 1773.1 AND 1773.8, THE AMOUNT PAID FOR THIS EMPLOYER PAYMENT MAY VARY RESULTING IN A LOWER TAXABLE BASIC HOURLY WAGE RATE, BUT THE TOTAL HOURLY RATES FOR STRAIGHT TIME AND OVERTIME MAY NOT BE LESS THAN THE GENERAL PREVAILING RATE OF PER DIEM WAGES.

AT RATE APPLIES TO FIRST 4 DAILY OVERTIME HOURS AND THE FIRST 8 HOURS WORKED ON SATURDAY DURING THE EMPLOYEES NORMAL WORKING HOURS. ALL OTHER OVERTIME HOURS SHALL BE PAID AT THE SUNDAY AND HOLIDAY DOUBLE TIME RATE.

AU INCLUDES $0.03 FOR SCHOLAR FUND.

AV THE RATIO OF TERRAZZO FINISHER HOURS TO TERRAZZO WORKER HOURS SHALL NOT EXCEED TWO (2) TO ONE (1).

AW INCLUDES AMOUNT WITHHELD FOR DUES CHECK OFF, WHICH IS FACTORED IN THE OVERTIME RATES. ANY EMPLOYEE WORKING UNDERGROUND SHALL RECEIVE $1.00 PER HOUR IN ADDITION TO REGULAR WAGES.

AX RATE APPLIES TO FIRST TWO YEARS OF EMPLOYMENT ONLY; $1.35 AFTER 2 YEARS; $1.45 AFTER 5 YEARS; $1.60 AFTER 10 YEARS

AY COMPUTATION IS BASED ON THE LOWEST VACATION AMOUNT. THESE RATES SHOULD BE INCREASED BY ANY ADDITIONAL VACATION/HOLIDAY PAY THAT IS REQUIRED.

AZ RATE APPLIES TO FIRST TWO YEARS OF EMPLOYMENT ONLY; $1.27 AFTER 2 YEARS; $1.37 AFTER 5 YEARS; $1.52 AFTER 10 YEARS.

BA RATE APPLIES TO FIRST TWO YEARS OF EMPLOYMENT ONLY; $1.08 AFTER 2 YEARS; $1.18 AFTER 5 YEARS; $1.33 AFTER 10 YEARS.

RECOGNIZED HOLIDAYS: HOLIDAYS UPON WHICH THE GENERAL PREVAILING HOURLY WAGE RATE FOR HOLIDAY WORK SHALL BE PAID, SHALL BE ALL HOLIDAYS IN THE COLLECTIVE BARGAINING AGREEMENT, APPLICABLE TO THE PARTICULAR CRAFT, CLASSIFICATION, OR TYPE OF WORKER EMPLOYED ON THE PROJECT, WHICH IS ON FILE WITH THE DIRECTOR OF INDUSTRIAL RELATIONS. IF THE PREVAILING RATE IS NOT BASED ON A COLLECTIVELY BARGAINED RATE, THE HOLIDAYS UPON WHICH THE PREVAILING RATE SHALL BE PAID SHALL BE AS PROVIDED IN SECTION 6700 OF THE GOVERNMENT CODE. YOU MAY OBTAIN THE HOLIDAY PROVISIONS FOR THE CURRENT DETERMINATIONS ON THE INTERNET AT HTTP://WWW.DIR.CA.GOV/OPRL/PWD. HOLIDAY PROVISIONS FOR CURRENT OR SUPERSEDED DETERMINATIONS MAY BE OBTAINED BY CONTACTING THE OFFICE OF THE DIRECTOR - RESEARCH UNIT AT (415) 703-4774.

TRAVEL AND/OR SUBSISTENCE PAYMENT: IN ACCORDANCE WITH LABOR CODE SECTIONS 1773.1 AND 1773.9, CONTRACTORS SHALL MAKE TRAVEL AND/OR SUBSISTENCE PAYMENTS TO EACH WORKER TO EXECUTE THE WORK. YOU MAY OBTAIN THE TRAVEL AND/OR SUBSISTENCE PROVISIONS FOR THE CURRENT DETERMINATIONS ON THE INTERNET @ HTTP://WWW.DIR.CA.GOV/OPRL/PWD. TRAVEL AND/OR SUBSISTENCE REQUIREMENTS FOR CURRENT OR SUPERSEDED DETERMINATIONS MAY BE OBTAINED FROM THE OFFICE OF THE DIRECTOR - RESEARCH UNIT AT (415) 703-4774.

CONTRA-2014-2-Determination

GENERAL PREVAILING WAGE DETERMINATION MADE BY THE DIRECTOR OF INDUSTRIAL RELATIONS

PURSUANT TO CALIFORNIA LABOR CODE PART 7, CHAPTER 1, ARTICLE 2, SECTIONS 1770, 1773 AND 1773.1

FOR COMMERCIAL BUILDING, HIGHWAY, HEAVY CONSTRUCTION AND DREDGING PROJECTS

LOCALITY: CONTRA COSTA COUNTY

DETERMINATION: CON-2014-2

				INCREASE 1		INCREASE 2		INCREASE 3		INCREASE 4		INCREASE 5		INCREASE 6		INCREASE 7	
	CRAFT (JOURNEY LEVEL)	ISSUE DATE	EXPIRATION DATE	DATE OF NEXT CHANGE	AMOUNT OF INCREASE	DATE OF NEXT CHANGE	AMOUNT OF INCREASE	DATE OF NEXT CHANGE	AMOUNT OF INCREASE	DATE OF NEXT CHANGE	AMOUNT OF INCREASE	DATE OF NEXT CHANGE	AMOUNT OF INCREASE	DATE OF NEXT CHANGE	AMOUNT OF INCREASE	DATE OF NEXT CHANGE	AMOUNT OF INCREASE
	PLASTERER	8/22/2014	06/30/2015**	7/1/2015	$1.70 A	7/1/2016	$1.70 A										
B	**PLASTER TENDER**	8/22/2014	06/30/2015**	7/1/2015	$0.60 C												
B	GUN MAN	8/22/2014	06/30/2015**	7/1/2015	$0.60 C												
	PLUMBER:																
	PLUMBER, PIPE FITTER & REFRIGERATION FITTER (HVAC)	8/22/2014	06/30/2015**	7/1/2015	$2.45 A												
	SERVICE TECHNICIAN	8/22/2014	06/30/2015**	7/1/2015	$2.45 A												
	UNDERGROUND UTILITY PIPEFITTER	8/22/2014	06/30/2015**	7/1/2015	$0.85 D	7/1/2016	$0.80 E										
	LANDSCAPE PIPEFITTER	8/22/2014	06/30/2015**	7/1/2015	$0.85 D	7/1/2016	$0.80 E										
F	UNDERGROUND UTILITY ASSISTANT JOURNEYMAN	8/22/2014	06/30/2015**	7/1/2015	$0.85 D	7/1/2016	$0.80 E										
F	LANDSCAPE ASSISTANT JOURNEYMAN	8/22/2014	06/30/2015**	7/1/2015	$0.85 D	7/1/2016	$0.80 E										
G	UNDERGROUND UTILITY TRADESMAN	8/22/2014	06/30/2015**	7/1/2015	$0.85 D	7/1/2016	$0.80 E										
H	LANDSCAPE TRADESMAN I	8/22/2014	06/30/2015**	7/1/2015	$0.85 D	7/1/2016	$0.80 E										
H	LANDSCAPE TRADESMAN II	8/22/2014	06/30/2015**	7/1/2015	$0.85 D	7/1/2016	$0.80 E										
I	**TERRAZZO FINISHER**	8/22/2014	06/30/2015**	7/1/2015	$0.75 A	7/1/2016	$1.00 A	7/1/2017	$1.00 A	7/1/2018	$1.25 A						
I	**TERRAZZO WORKER**	8/22/2014	06/30/2015**	7/1/2015	$1.25 A	7/1/2016	$1.50 A	7/1/2017	$1.75 A	7/1/2018	$2.00 A						
	TILE FINISHER	8/22/2014	03/31/2015**	4/1/2015	$1.14 A												
	RED CIRCLED FINISHER	8/22/2014	03/31/2015**	4/1/2015	$1.14 A												
	TILE SETTER	8/22/2014	03/31/2015**	4/1/2015	$1.75 A												

FOOTNOTES

GENERAL PREVAILING WAGE DETERMINATION MADE BY THE DIRECTOR OF INDUSTRIAL RELATIONS

PURSUANT TO CALIFORNIA LABOR CODE PART 7, CHAPTER 1, ARTICLE 2, SECTIONS 1770, 1773 AND 1773.1

LOCALITY: CONTRA COSTA COUNTY

DETERMINATION: CON-2014-2

A THE PREDETERMINED INCREASE SHOWN IS TO BE ALLOCATED TO WAGES AND/OR EMPLOYER PAYMENTS. PLEASE CONTACT THE OFFICE OF THE DIRECTOR - RESEARCH UNIT AT (415) 703-4774 WHEN THE PREDETERMINED INCREASE BECOMES DUE TO CONFIRM THE DISTRIBUTION. PLEASE ALSO EXAMINE THE IMPORTANT NOTICES TO SEE IF ANY MODIFICATIONS HAVE BEEN ISSUED, AS THERE MAY BE REDUCTIONS TO PREDETERMINED INCREASES.

B ALL HOD CARRIERS WORKING ON THE HOSE SHALL RECEIVE $5.00 PER DAY OVER SCALE.

C $0.25 TO HEALTH AND WELFARE AND $0.35 TO PENSION.

D $0.05 TO THE BASIC HOURLY RATE AND $0.80 TO HEALTH AND WELFARE

E $0.10 TO THE BASIC HOURLY RATE, $0.60 TO HEALTH AND WELFARE, AND $0.10 TO VACATION

F THERE MUST BE AT LEAST ONE JOURNEYMAN PIPEFITTER PER CONTRACTOR ON EACH JOBSITE.

G THERE SHALL BE NO MORE THAN THREE TRADESMEN TO EVERY TWO JOURNEYMAN PIPEFITTER/ASSISTANT JOURNEYMAN PIPEFITTER COMBINATION EMPLOYED PER CONTRACTOR ON EACH JOBSITE.

H THERE SHALL BE NO MORE THAN FOUR TRADESMEN TO EVERY TWO JOURNEYMAN PIPEFITTER/ASSISTANT JOURNEYMAN PIPEFITTER COMBINATION EMPLOYED PER CONTRACTOR ON EACH JOBSITE. MAINTENANCE WORK, BOTH DURING AND AFTER THE PLANT ESTABLISHMENT PERIOD, MAY BE PERFORMED BY LANDSCAPE TRADESMEN WITHOUT THE SUPERVISION OF A JOURNEYMAN PIPEFITTER.

I THE RATIO OF TERRAZZO FINISHER HOURS TO TERRAZZO WORKER HOURS SHALL NOT EXCEED TWO (2) TO ONE (1).

CONTRA-2014-2-INC

GENERAL PREVAILING WAGE DETERMINATION MADE BY THE DIRECTOR OF INDUSTRIAL RELATIONS
PURSUANT TO CALIFORNIA LABOR CODE PART 7, CHAPTER 1, ARTICLE 2, SECTIONS 1770, 1773 AND 1773.1
FOR COMMERCIAL BUILDING, HIGHWAY, HEAVY CONSTRUCTION AND DREDGING PROJECTS

LOCALITY: CONTRA COSTA COUNTY
DETERMINATION: CON-2014-2

				EMPLOYER PAYMENTS						STRAIGHT-TIME		OVERTIME HOURLY RATE			CONTRACT PROVISIONS				
	CRAFT (JOURNEY LEVEL)	ISSUE DATE	EXPIRATION DATE	BASIC HOURLY RATE	HEALTH AND WELFARE	PENSION	VACATION/ HOLIDAY	TRAINING	OTHER PAYMENTS	HOURS	TOTAL HOURLY RATE	DAILY	SATURDAY	SUNDAY AND HOLIDAY	HOLIDAYS	SCOPE OF WORK	TRAVEL & SUBSISTENCE	SHIFT DIFFERENTIAL	PREDETERMINED INCREASES
#	**BRICKLAYER, BLOCKLAYER,**																		
	POINTER, CLEANER, CAULKER, WATERPROOFER (2ND SHIFT)	8/22/2014	06/30/2015*	A 48.390	9.690	10.520	B -	1.440	0.400	C 8.0	70.440	94.640	D 94.640	118.830	HOLIDAYS	SCOPE	TRAVEL	SHIFT	**NO INCREASE**
	POINTER, CLEANNER, CAULKER, WATERPROOFER (3RD SHIFT)	8/22/2014	06/30/2015*	A 50.500	9.690	10.520	B -	1.440	0.400	C 8.0	72.550	97.800	D 97.800	123.050	HOLIDAYS	SCOPE	TRAVEL	SHIFT	**NO INCREASE**
#	**BRICKLAYER, BLOCKLAYER:**																		
	BRICKLAYER, BLOCKLAYER, STONEMASON (2ND SHIFT)	8/22/2013	04/30/2014*	A 42.080	9.690	10.000	E 3.000	0.800	F 1.230	C 8.0	66.800	G 89.340	G 89.340	111.880	HOLIDAYS	SCOPE	TRAVEL	SHIFT	**NO INCREASE**
	BRICKLAYER, BLOCKLAYER, STONEMASON (3RD SHIFT)	8/22/2013	04/30/2014*	A 44.130	9.690	10.000	E 3.000	0.800	F 1.230	C 8.0	68.850	G 92.420	G 92.420	115.980	HOLIDAYS	SCOPE	TRAVEL	SHIFT	**NO INCREASE**
#	**ELECTRICIAN:**																		
	COMM & SYSTEM INSTALLER, SECOND SHIFT	2/22/2014	11/30/2014*	32.070	9.550	H 4.650	-	1.100	I 0.210	8.0	48.700	J 65.300	J 65.300	K 81.890	HOLIDAYS	SCOPE	TRAVEL	SHIFT	**NO INCREASE**
	COMM & SYSTEM INSTALLER, THIRD SHIFT	2/22/2014	11/30/2014*	32.320	9.550	H 4.650	-	1.100	I 0.210	8.0	48.960	J 65.680	J 65.680	K 82.410	HOLIDAYS	SCOPE	TRAVEL	SHIFT	**NO INCREASE**
	COMM & SYSTEM TECH., SECOND SHIFT	2/22/2014	11/30/2014*	36.410	9.550	H 4.650	-	1.100	I 0.210	8.0	53.190	J 72.030	J 72.030	K 90.870	HOLIDAYS	SCOPE	TRAVEL	SHIFT	**NO INCREASE**
	COMM & SYSTEM TECH., THIRD SHIFT	2/22/2014	11/30/2014*	36.660	9.550	H 4.650	-	1.100	I 0.210	8.0	53.450	J 72.420	J 72.420	K 91.390	HOLIDAYS	SCOPE	TRAVEL	SHIFT	**NO INCREASE**
	INSIDE WIREMAN, TECHNICIAN SECOND SHIFT	8/22/2014	05/31/2015*	A 53.090	13.100	H 10.000	-	0.670	L 0.810	8.0	79.260	M 106.600	N 106.600	O 133.950	HOLIDAYS	SCOPE	TRAVEL	SHIFT	**NO INCREASE**
	INSIDE WIREMAN, TECHNICIAN THIRD SHIFT	8/22/2014	05/31/2015*	A 59.470	13.100	H 10.000	-	0.670	L 0.810	8.0	85.830	M 116.460	N 116.460	O 147.090	HOLIDAYS	SCOPE	TRAVEL	SHIFT	**NO INCREASE**
	CABLE SPLICER, 2ND SHIFT	8/22/2014	05/31/2015*	A 60.610	13.100	H 10.000	-	0.670	L 0.810	8.0	87.010	M 118.220	N 118.220	O 149.440	HOLIDAYS	SCOPE	TRAVEL	SHIFT	**NO INCREASE**
	CABLE SPLICER, 3RD SHIFT	8/22/2014	05/31/2015*	A 67.890	13.100	H 10.000	-	0.670	L 0.810	8.0	94.510	M 129.470	N 129.470	O 164.430	HOLIDAYS	SCOPE	TRAVEL	SHIFT	**NO INCREASE**
#	**MARBLE FINISHER**																		
P	MARBLE FINISHER (2ND SHIFT)	8/22/2013	07/31/2014*	Q 33.050	9.690	3.870	R -	0.450	0.530	8.0	47.590	S 64.110	80.640	80.640	HOLIDAYS	SCOPE	TRAVEL	SHIFT	**NO INCREASE**
#	**MARBLE MASON**																		
P	MARBLE MASON (2ND SHIFT)	8/22/2013	07/31/2014*	Q 45.300	9.690	11.990	R -	0.800	0.730	8.0	68.510	S 91.160	113.810	113.810	HOLIDAYS	SCOPE	TRAVEL	SHIFT	**NO INCREASE**
#	**PLASTERER**																		
	PLASTERER: 2ND SHIFT	8/22/2014	06/30/2015**	T 38.480	12.530	10.630	B -	1.050	0.900	U 7.0	63.590	V 80.260	V 80.260	96.930	HOLIDAYS	SCOPE	TRAVEL	SHIFT	INCREASE
	PLASTERER: 3RD SHIFT	8/22/2014	06/30/2015**	T 39.480	12.530	10.630	B -	1.050	0.900	U 7.0	64.590	V 81.760	V 81.760	98.930	HOLIDAYS	SCOPE	TRAVEL	SHIFT	INCREASE
#	**TERRAZZO FINISHER**																		
W	TERRAZZO FINISHER, 2ND SHIFT	8/22/2014	06/30/2015**	X 38.190	9.690	5.120	B -	0.800	0.490	8.0	54.290	Y 71.280	Y 71.280	88.280	HOLIDAYS	SCOPE	TRAVEL	SHIFT	INCREASE
W	TERRAZZO FINISHER, 3RD SHIFT	8/22/2014	06/30/2015**	X 38.190	9.690	5.120	B -	0.800	0.490	8.0	54.290	Y 71.280	Y 71.280	88.280	HOLIDAYS	SCOPE	TRAVEL	SHIFT	INCREASE
#	**TERRAZZO WORKER**																		
W	TERRAZZO WORKER, 2ND SHIFT	8/22/2014	06/30/2015**	X 48.420	9.690	14.420	B -	0.800	0.670	8.0	74.000	Y 95.540	Y 95.540	117.080	HOLIDAYS	SCOPE	TRAVEL	SHIFT	INCREASE
W	TERRAZZO WORKER, 3RD SHIFT	8/22/2014	06/30/2015**	X 48.420	9.690	14.420	B -	0.800	0.670	8.0	74.000	Y 95.540	Y 95.540	117.080	HOLIDAYS	SCOPE	TRAVEL	SHIFT	INCREASE
#	**TILE FINISHER**																		
	TILE FINISHER, 2ND SHIFT	8/22/2014	03/31/2015**	Z 26.060	8.530	3.440	0.700	0.400	1.090	8.0	40.220	51.250	C 51.250	62.280	HOLIDAYS	SCOPE	TRAVEL	SHIFT	INCREASE
	TILE FINISHER - RED CIRCLED FINISHER, 2ND SHIFT	8/22/2014	03/31/2015**	Z 31.750	8.530	3.670	1.300	0.300	1.100	8.0	46.650	60.530	C 60.530	74.400	HOLIDAYS	SCOPE	TRAVEL	SHIFT	INCREASE
#	**TILE SETTER**																		
	TILE SETTER, 2ND SHIFT	8/22/2014	03/31/2015**	Z 43.240	8.530	4.670	2.350	0.590	1.680	8.0	61.060	80.180	C 80.180	99.300	HOLIDAYS	SCOPE	TRAVEL	SHIFT	INCREASE

FOOTNOTES

GENERAL PREVAILING WAGE DETERMINATION MADE BY THE DIRECTOR OF INDUSTRIAL RELATIONS
PURSUANT TO CALIFORNIA LABOR CODE PART 7, CHAPTER 1, ARTICLE 2, SECTIONS 1770, 1773 AND 1773.1

LOCALITY: CONTRA COSTA COUNTY

DETERMINATION: CON-2014-2

* EFFECTIVE UNTIL SUPERSEDED BY A NEW DETERMINATION ISSUED BY THE DIRECTOR OF INDUSTRIAL RELATIONS. CONTACT THE OFFICE OF THE DIRECTOR - RESEARCH UNIT AT (415) 703-4774 FOR THE NEW RATES AFTER TEN DAYS AFTER THE EXPIRATION DATE IF NO SUBSEQUENT DETERMINATION IS ISSUED.

** THE RATE TO BE PAID FOR WORK PERFORMED AFTER THIS DATE HAS BEEN DETERMINED. IF WORK WILL EXTEND PAST THIS DATE, THE NEW RATE MUST BE PAID AND SHOULD BE INCORPORATED IN CONTRACTS ENTERED INTO NOW. CONTACT THE OFFICE OF THE DIRECTOR - RESEARCH UNIT FOR SPECIFIC RATES AT (415) 703-4774.

\# INDICATES AN APPRENTICEABLE CRAFT. THE CURRENT APPRENTICE WAGE RATES ARE AVAILABLE ON THE INTERNET @ HTTP://WWW.DIR.CA.GOV/OPRL/PWAPPWAGE/PWAPPWAGESTART.ASP. TO OBTAIN ANY APPRENTICE WAGE RATES AS OF JULY 1, 2008 AND PRIOR TO SEPTEMBER 27, 2012, PLEASE CONTACT THE DIVISION OF APPRENTICESHIP STANDARDS OR REFER TO THE DIVISION OF APPRENTICESHIP STANDARDS' WEBSITE AT HTTP://WWW.DIR.CA.GOV/DAS/DAS.HTML.

& THE BASIC HOURLY RATE AND EMPLOYER PAYMENTS ARE NOT TAKEN FROM A COLLECTIVE BARGAINING AGREEMENT FOR THIS CRAFT OR CLASSIFICATION.

A INCLUDES AMOUNT WITHHELD FOR DUES CHECK OFF.

B INCLUDED IN STRAIGHT-TIME HOURLY RATE.

C SATURDAYS IN THE SAME WORK WEEK MAY BE WORKED AT STRAIGHT-TIME IF JOB IS SHUT DOWN DURING THE NORMAL WORKWEEK DUE TO INCLEMENT WEATHER.

D RATE APPLIES TO THE FIRST 10 HOURS WORKED ON SATURDAY. ALL OTHER HOURS ARE PAID AT THE SUNDAY/HOLIDAY RATE.

E AMOUNT INCLUDED IN FACTORING OVERTIME RATES.

F INCLUDES AMOUNT FOR INDUSTRY PROMOTION FUND, INTERNATIONAL MASONRY INSTITUTE (IMI), AND LABOR MANAGEMENT COOPERATION COMMITTEE (LMCC)

G RATE APPLIES TO THE FIRST 2 DAILY OVERTIME HOURS AND THE FIRST 10 HOURS ON SATURDAY; ALL OTHER TIME IS PAID AT THE SUNDAY AND HOLIDAY OVERTIME HOURLY RATE.

H IN ADDITION, AN AMOUNT EQUAL TO 3% OF THE BASIC HOURLY RATE IS ADDED TO THE TOTAL HOURLY RATE AND OVERTIME HOURLY RATES FOR THE NATIONAL EMPLOYEES BENEFIT BOARD.

I IN ADDITION, AN AMOUNT EQUAL TO 0.5% OF THE BASIC HOURLY RATE, WHICH IS FACTORED AT THE APPLICABLE OVERTIME MULTIPLIER, IS ADDED TO THE TOTAL HOURLY RATE AND OVERTIME HOURLY RATES.

J RATE APPLIES TO THE FIRST 4 DAILY OVERTIME HOURS AND THE FIRST 8 HOURS WORKED ON SATURDAY. ALL OTHER TIME IS PAID AT THE SUNDAY AND HOLIDAY OVERTIME RATE.

K DISREGARD THIS RATE. USE THE SUNDAY AND HOLIDAY NON-SHIFT DIFFERENTIAL RATE FOR THIS CLASSIFICATION AS PUBLISHED IN THE DIRECTOR'S GENERAL PREVAILING WAGE DETERMINATIONS.

L AMOUNT IS FOR INDUSTRY FUND.

M RATE APPLIES TO ALL HOURS WORKED IN EXCESS OF 8 HOURS MONDAY THROUGH FRIDAY.

N DISREGARD THIS RATE. FOR THE FIRST EIGHT HOURS OF WORK PERFORMED ON SATURDAY, USE THE SATURDAY NON-SHIFT DIFFERENTIAL RATE FOR THIS CLASSIFICATION AS PUBLISHED IN THE DIRECTOR'S GENERAL PREVAILING WAGE DETERMINATIONS.

O DISREGARD THIS RATE. FOR ALL HOURS IN EXCESS OF THE FIRST EIGHT HOURS OF WORK PERFORMED ON SATURDAY AND FOR ALL HOURS WORKED ON SUNDAYS AND HOLIDAYS, USE THE SUNDAY AND HOLIDAY NON-SHIFT DIFFERENTIAL RATE FOR THIS CLASSIFICATION AS PUBLISHED IN THE DIRECTOR'S GENERAL PREVAILING WAGE DETERMINATIONS.

P EMPLOYEES WORKING ON ANY SUSPENDED PLATFORM/SCAFFOLD SHALL BE PAID AN ADDITIONAL $15.00 PER DAY ABOVE THE WAGE RATE.

Q INCLUDES AN AMOUNT FOR DUES CHECK-OFF AND VACATION/HOLIDAY WHICH ARE FACTORED INTO OVERTIME RATES.

R INCLUDED IN BASIC HOURLY RATE.

S RATE APPLIES TO FIRST 2 OVERTIME HOURS MONDAY THROUGH FRIDAY; ALL OTHER OVERTIME IS PAID AT THE DOUBLE TIME RATE.

T INCLUDE AMOUNTS WITHHELD FOR DUES CHECK OFF AND VACATION WHICH IS NOT FACTORED INTO OVERTIME. EMPLOYEES OPERATING AND WORKING BEHIND PLASTER GUNS SHALL RECEIVE AN ADDITIONAL $5.00 PER DAY ABOVE THE WAGE RATE. EMPLOYEES WORKING ON AN EXTERIOR SUSPENDED SCAFFOLD SHALL BE PAID AN ADDITIONAL $10.00 PER DAY ABOVE THE WAGE RATE.

U 8 HOURS PAY FOR 7 HOURS WORKED AT STRAIGHT-TIME BASIC HOURLY RATE. SATURDAYS IN THE SAME WORK WEEK MAY BE WORKED AT STRAIGHT-TIME IF THE JOB IS SHUT DOWN DURING THE NORMAL WORK WEEK DUE TO INCLEMENT WEATHER.

V RATE APPLIES TO THE FIRST 2 OVERTIME HOURS MONDAY THROUGH FRIDAY AND THE FIRST 7 HOURS ON SATURDAYS AND DESIGNATED DAYS OFF. ALL OTHER TIME IS PAID AT THE SUNDAY AND HOLIDAY OVERTIME RATE.

W THE RATIO OF TERRAZZO FINISHER HOURS TO TERRAZZO WORKER HOURS SHALL NOT EXCEED TWO (2) TO ONE (1).

X INCLUDES AN AMOUNT FOR VACATION/DUES CHECK OFF WHICH IS NOT FACTORED IN THE OVERTIME RATES.

Y RATE APPLIES TO THE FIRST 2 DAILY OVERTIME HOURS AND THE FIRST 8 HOURS ON SATURDAY ONLY; ALL OTHER TIME IS PAID AT THE SUNDAY AND HOLIDAY OVERTIME HOURLY RATE.

Z INCLUDES AMOUNT WITHHELD FOR DUES CHECK OFF, WHICH IS FACTORED IN THE OVERTIME RATES. INCLUDES AN AMOUNT OF PREMIUM RATE PER HOUR ABOVE THE REGULAR STRAIGHT-TIME RATE, WHICH IS NOT FACTORED IN THE OVERTIME RATES. ANY EMPLOYEE WORKING UNDERGROUND SHALL RECEIVE $1.00 PER HOUR IN ADDITION TO REGULAR WAGES.

RECOGNIZED HOLIDAYS: HOLIDAYS UPON WHICH THE GENERAL PREVAILING HOURLY WAGE RATE FOR HOLIDAY WORK SHALL BE PAID, SHALL BE ALL HOLIDAYS IN THE COLLECTIVE BARGAINING AGREEMENT, APPLICABLE TO THE PARTICULAR CRAFT, CLASSIFICATION, OR TYPE OF WORKER EMPLOYED ON THE PROJECT, WHICH IS ON FILE WITH THE DIRECTOR OF INDUSTRIAL RELATIONS. IF THE PREVAILING RATE IS NOT BASED ON A COLLECTIVELY BARGAINED RATE, THE HOLIDAYS UPON WHICH THE PREVAILING RATE SHALL BE PAID SHALL BE AS PROVIDED IN SECTION 6700 OF THE GOVERNMENT CODE. YOU MAY OBTAIN THE HOLIDAY PROVISIONS FOR THE CURRENT DETERMINATIONS ON THE INTERNET AT HTTP://WWW.DIR.CA.GOV/OPRL/PWD. HOLIDAY PROVISIONS FOR CURRENT OR SUPERSEDED DETERMINATIONS MAY BE OBTAINED BY CONTACTING THE OFFICE OF THE DIRECTOR - RESEARCH UNIT AT (415) 703-4774.

TRAVEL AND/OR SUBSISTENCE PAYMENT: IN ACCORDANCE WITH LABOR CODE SECTIONS 1773.1 AND 1773.9, CONTRACTORS SHALL MAKE TRAVEL AND/OR SUBSISTENCE PAYMENTS TO EACH WORKER TO EXECUTE THE WORK. YOU MAY OBTAIN THE TRAVEL AND/OR SUBSISTENCE PROVISIONS FOR THE CURRENT DETERMINATIONS ON THE INTERNET @ HTTP://WWW.DIR.CA.GOV/OPRL/PWD. TRAVEL AND/OR SUBSISTENCE REQUIREMENTS FOR CURRENT OR SUPERSEDED DETERMINATIONS MAY BE OBTAINED FROM THE OFFICE OF THE DIRECTOR - RESEARCH UNIT AT (415) 703-4774.

CONTRA-2014-2-Determination

GENERAL PREVAILING WAGE DETERMINATION MADE AY THE DIRECTOR OF INDUSTRIAL RELATIONS

PURSUANT TO CALIFORNIA LAAOR CODE PART 7, CHAPTER 1, ARTICLE 2, SECTIONS 1770, 1773 AND 1773.1

FOR COMMERCIAL AUILDING, HIGHWAY, HEAVY CONSTRUCTION AND DREDGING PROJECTS

LOCALITY: CONTRA COSTA COUNTY

DETERMINATION: CON-2014-2

				INCREASE 1		INCREASE 2		INCREASE 3		INCREASE 4		INCREASE 5		INCREASE 6		INCREASE 7	
	CRAFT (JOURNEY LEVEL)	ISSUE DATE	EXPIRATION DATE	DATE OF NEXT CHANGE	AMOUNT OF INCREASE	DATE OF NEXT CHANGE	AMOUNT OF INCREASE	DATE OF NEXT CHANGE	AMOUNT OF INCREASE	DATE OF NEXT CHANGE	AMOUNT OF INCREASE	DATE OF NEXT CHANGE	AMOUNT OF INCREASE	DATE OF NEXT CHANGE	AMOUNT OF INCREASE	DATE OF NEXT CHANGE	AMOUNT OF INCREASE
	PLASTERER																
	PLASTERER: 2ND SHIFT	8/22/2014	06/30/2015**	7/1/2015	$1.70 A	7/1/2016	$1.70 A										
	PLASTERER: 3RD SHIFT	8/22/2014	06/30/2015**	7/1/2015	$1.70 A	7/1/2016	$1.70 A										
	TERRAZZO FINISHER																
B	TERRAZZO FINISHER, 2ND SHIFT	8/22/2014	06/30/2015**	7/1/2015	$0.75 A	7/1/2016	$1.00 A	7/1/2017	$1.00 A	7/1/2018	$1.25 A						
B	TERRAZZO FINISHER, 3RD SHIFT	8/22/2014	06/30/2015**	7/1/2015	$0.75 A	7/1/2016	$1.00 A	7/1/2017	$1.00 A	7/1/2018	$1.25 A						
	TERRAZZO WORKER																
B	TERRAZZO WORKER, 2ND SHIFT	8/22/2014	06/30/2015**	7/1/2015	$1.25 A	7/1/2016	$1.50 A	7/1/2017	$1.75 A	7/1/2018	$2.00 A						
B	TERRAZZO WORKER, 3RD SHIFT	8/22/2014	06/30/2015**	7/1/2015	$1.25 A	7/1/2016	$1.50 A	7/1/2017	$1.75 A	7/1/2018	$2.00 A						
	TILE FINISHER																
	TILE FINISHER, 2ND SHIFT	8/22/2014	03/31/2015**	4/1/2015	$1.14 A												
	TILE FINISHER - RED CIRCLED FINISHER, 2ND SHIFT	8/22/2014	03/31/2015**	4/1/2015	$1.14 A												
	TILE SETTER																
	TILE SETTER, 2ND SHIFT	8/22/2014	03/31/2015**	4/1/2015	$1.75 A												

FOOTNOTES

GENERAL PREVAILING WAGE DETERMINATION MADE BY THE DIRECTOR OF INDUSTRIAL RELATIONS

PURSUANT TO CALIFORNIA LABOR CODE PART 7, CHAPTER 1, ARTICLE 2, SECTIONS 1770, 1773 AND 1773.1

LOCALITY: CONTRA COSTA COUNTY

DETERMINATION: CON-2014-2

A THE PREDETERMINED INCREASE SHOWN IS TO BE ALLOCATED TO WAGES AND/OR EMPLOYER PAYMENTS. PLEASE CONTACT THE OFFICE OF THE DIRECTOR - RESEARCH UNIT AT (415) 703-4774 WHEN THE PREDETERMINED INCREASE BECOMES DUE TO CONFIRM THE DISTRIBUTION. PLEASE ALSO EXAMINE THE IMPORTANT NOTICES TO SEE IF ANY MODIFICATIONS HAVE BEEN ISSUED, AS THERE MAY BE REDUCTIONS TO PREDETERMINED INCREASES.

B THE RATIO OF TERRAZZO FINISHER HOURS TO TERRAZZO WORKER HOURS SHALL NOT EXCEED TWO (2) TO ONE (1).

CONTRA-2014-2-INC