Standard Plans List

The Standard Plan sheets applicable to this contract include, but are not limited to those indicated below. Applicable Revised Standard Plans (RSP) and New Standard Plans (NSP) indicated below are included in the project plans as Standard Plan sheets.

	ELECTRICAL SYSTEMS – SYMBOLS AND ABBREVIATIONS
RSP ES-1A	**Electrical Systems (Symbols and Abbreviations)**
RSP ES-1B	**Electrical Systems (Symbols and Abbreviations)**
RSP ES-1C	**Electrical Systems (Symbols and Abbreviations)**
	ELECTRICAL SYSTEMS – SERVICE EQUIPMENT AND WIRING DIAGRAMS
RSP ES-2C	**Electrical Systems (Service Equipment Notes, Type III Series)**
RSP ES-2D	**Electrical Systems (Service Equipment and Typical Wiring Diagram, Type III – A Series)**
	ELECTRICAL SYSTEMS – CONTROLLER CABINETS
ES-3C	**Electrical Systems (Controller Cabinet Details)**
	ELECTRICAL SYSTEMS – SIGNAL HEADS, SIGNAL FACES AND MOUNTINGS
ES-4A	**Electrical Systems (Signal Heads and Mountings)**
ES-4B	**Electrical Systems (Signal Heads and Mountings)**
RSP ES-4C	**Electrical Systems (Signal Heads and Mountings)**
RSP ES-4D	**Electrical Systems (Signal Heads and Mountings)**
ES-4E	**Electrical Systems (Signal Faces and Mountings)**
	ELECTRICAL SYSTEMS – SIGNAL AND LIGHTING STANDARDS
RSP ES-7B	**Electrical Systems (Signal and Lighting Standard – Type 1 Standards and Equipment Numbering)**
	ELECTRICAL SYSTEMS – SIGNAL AND LIGHTING STANDARD DETAILS
ES-7N	**Electrical Systems (Signal and Lighting Standards – Details No. 2)**
	ELECTRICAL SYSTEMS – ISOFOOTCANDLE DIAGRAMS AND FOUNDATION DETAILS
ES-11	**Electrical Systems (Foundation Installations)**
	ELECTRICAL SYSTEMS – SPLICING, WIRING DETAILS AND FUSE RATINGS
ES-13A	**Electrical Systems (Splicing Details)**

The first order of work shall be to place the order for the electrical equipment. The Engineer shall be furnished a statement from the vendor that the order for the electrical equipment has been received and accepted by the vendor.

The uppermost layer of new pavement shall not be placed until all underlying conduits and loop detectors have been installed.

8-1.__ STATE-FURNISHED MATERIALS

The State furnishes you with:

- Model 2070 controller assembly, including controller unit, completely wired controller cabinet, and detector sensor units

The State furnishes you with completely wired controller cabinets with auxiliary equipment but without controller unit at Caltrans Maintenance Station, 30 Rickard Street, San Francisco, CA 94134. At least 48 hours before you pick up the materials, inform the Engineer what you will pick up and when you will pick it up.

SECTION 10-2. (BLANK)

SECTION 10-3. ELECTRICAL SYSTEMS

10-3.01 DESCRIPTION

Ramp metering systems and maintaining existing traffic management system elements during construction shall conform to the provisions in Section 86, "Electrical Systems," of the Standard Specifications and these special provisions.

10-3.__ COST BREAK-DOWN

Cost break-downs shall conform to the provisions in Section 86-1.03, "Cost Break-Down," of the Standard Specifications and these special provisions.

The Engineer shall be furnished a cost break-down for each contract lump sum item of work described in this Section 10-3.

The cost break-down shall be submitted to the Engineer for approval within 15 days after the contract has been approved. The cost break-down shall be approved, in writing, by the Engineer before any partial payment for the items of electrical work will be made.

10-3.__ MAINTAINING EXISTING TRAFFIC MANAGEMENT SYSTEM ELEMENTS DURING CONSTRUCTION

Traffic Management System (TMS) elements include, but are not limited to ramp metering (RM) system, communication system, traffic monitoring stations, video image vehicle detection system (VIVDS), microwave vehicle detection system (MVDS), loop detection system, changeable message sign (CMS) system, extinguishable message sign (EMS) system, highway advisory radio (HAR) system, closed circuit television (CCTV) camera system, roadway weather information system (RWIS), visibility sensor, and fiber optic system.

Existing TMS elements, including detection systems, identified on the plans and located within the project limits shall remain in place and be protected from damage. If the construction activities require existing TMS elements to be nonoperational or off line, and if temporary or portable TMS elements are not shown on the plans, the Contractor shall provide for temporary or portable TMS elements. The Contractor shall receive the Engineer's approval on the type of temporary or portable TMS elements and installation method.

Before work is performed, the Engineer, the Contractor, and the Department's Traffic Operations Electrical representatives shall jointly conduct a pre-construction operational status check of all existing TMS elements and each element's communication status with the Traffic Management Center (TMC), including existing TMS elements that are not shown on the plans and elements that may not be impacted by the Contractor's activities. The Department's Traffic Operations Electrical representatives will certify the TMS elements' location and status, and provide a copy of the certified list of the existing TMS elements within the project limits to the Contractor. The status list will include the operational, defined as having full functionality, and the nonoperational components.

The Contractor shall obtain written approval from the Engineer at least 72 hours before interrupting existing TMS elements' communication with the TMC that will result in the elements being nonoperational or off line. The Contractor shall notify the Engineer at least 72 hours before starting excavation activities.

Traffic monitoring stations and their associated communication systems, which were verified to be operational during the pre-construction operational status check, shall remain operational on freeway/highway mainline at all times, except:

1. For a duration of up to 15 days on any continuous segment of the freeway/highway longer than 3 miles
2. For a duration of up to 60 days on any continuous segment of the freeway/highway shorter than 3 miles

If the construction activities require existing detection systems to be nonoperational or off line for a longer time period or the spacing between traffic monitoring stations is more than the specified criteria above, and temporary or portable detection operations are not shown on the plans, the Contractor shall provide provisions for temporary or portable detection operations. The Contractor shall receive the Engineer's approval on the type of detection and installation before installing the temporary or portable detection.

If existing TMS elements shown on the plans or identified during the pre-construction operational status check, except traffic monitoring stations, are damaged or fail due to the Contractor's activity, where the elements are not fully functional, the Engineer shall be notified immediately. If the Contractor is notified by the Engineer that existing TMS elements have been damaged, have failed or are not fully functional due to the Contractor's activity, the damaged or failed TMS elements, excluding structure-related elements, shall be repaired or replaced, at the

Contractor's expense, within 24 hours. For a structure-related elements, the Contractor shall install temporary or portable TMS elements within 24 hours. For nonstructure-related TMS elements, the Engineer may approve temporary or portable TMS elements for use during the construction activities.

The Contractor shall demonstrate that repaired or replaced elements operate in a manner equal to or better than the replaced equipment or as directed by the Engineer. If the Contractor fails to perform required repairs or replacement work, as determined by the Engineer, the State may perform the repair or replacement work and the cost will be deducted from monies due to the Contractor.

A TMS element shall be considered nonoperational or off line for the duration of time that active communications with the TMC is disrupted, resulting in messages and commands not transmitted from or to the TMS element.

The Contractor shall provide provisions for replacing existing TMS elements within the project limits, including detection systems, that were not identified on the plans or during the pre-construction operational status check that became damaged due to the Contractor's activities.

If the pre-construction operational status check identified existing TMS elements, then the Contractor, the Engineer, and the Department's Traffic Operations Electrical representatives shall jointly conduct a post construction operational status check of all existing TMS elements and each element's communication status with the TMC. The Department's Traffic Operations Electrical representatives will certify the TMS elements' status and provide a copy of the certified list of the existing TMS elements within the project limits to the Contractor. The status list will include the operational, defined as having full functionality, and the nonoperational components. TMS elements that cease to be functional between pre and post construction status checks shall be repaired at the Contractor's expense and as directed by the Engineer.

The Engineer will approve, in writing, the schedule for final replacement, the replacement methods and the replacement elements, including element types and installation methods before repair or replacement work is performed. The final TMS elements shall be new and of equal or better quality than the existing TMS elements.

PAYMENT

The contract lump sum price paid for maintaining existing traffic management system elements during construction shall include full compensation for furnishing all labor, materials, tools, equipment and incidentals, and for doing all the work involved in maintaining existing traffic management system elements as shown on the plans, specified in the Standard Specifications and these special provisions, and as directed by the Engineer.

If no electrical work exists on the project and no TMS elements are identified within the project limits, the pre-construction operational status check will be paid for as extra work as provided in Section 4-1.03D, "Extra Work," of the Standard Specifications.

Furnishing and installing temporary or portable TMS elements that are not shown on the plans, but are required when an existing TMS element becomes nonoperational or off line due to construction activities, will be paid for as extra work as provided in Section 4-1.03D, "Extra Work," of the Standard Specifications.

Furnishing and installing temporary or portable TMS elements and replacing TMS elements that are not shown on the plans nor identified during the pre-construction operational status check and were damaged by construction activities will be paid for as extra work as provided in Section 4-1.03D, "Extra Work," of the Standard Specifications.

If the Contractor is required to submit provisions for the replacement of TMS elements that were not identified, the provisions will be paid for as extra work as provided in Section 4-1.03D, "Extra Work," of the Standard Specifications.

10-3.__ CAST-IN-DRILLED-HOLE CONCRETE PILE FOUNDATIONS

GENERAL

Summary

This work includes constructing cast-in-drilled-hole concrete pile foundations for traffic signal and lighting standards.

Comply with Section 86-2.03, "Foundations," of the Standard Specifications.

MATERIALS

Concrete must contain not less than 590 pounds of cementitious material per cubic yard.

CONSTRUCTION

For standards located in sidewalk areas, the pile foundation must be:

1. Placed to final sidewalk grade before the sidewalk is placed
2. Square for the top 4 inches

Use sleeve nuts on Type 1-B standards. The bottom of the base plate must be flush with finished grade.

PAYMENT

Payment for cast-in-drilled-hole concrete pile foundations shall conform to the provisions in Section 86-8, "Payment," of the Standard Specifications.

10-3.__ STANDARDS, STEEL PEDESTALS, AND POSTS

Standards, steel pedestals, and posts for traffic signal and lighting standards shall conform to the provisions in Section 86-2.04, "Standards, Steel Pedestals and Posts," of the Standard Specifications, "Steel Structures" of these special provisions, and the following requirements.

Steel bolts not designated on the plans as high-strength (HS) or stainless steel shall be for general applications and shall conform to the requirements in ASTM Designation: A 307.

Anchor bolts shall conform to the requirements in ASTM Designation: F 1554, Grade 36. High-strength (HS) anchor bolts shall conform to the requirements in ASTM Designation: F 1554, Grade 105.

Handhole reinforcement rings for standards, steel pedestals, and posts shall be continuous around the handholes.

Type 1 standards shall be assembled and set with the handhole on the downstream side of the pole in relation to traffic or as shown on the plans.

10-3.__ CONDUIT

Conduit to be installed underground shall be Type 1 or Type 3 unless otherwise specified.

The conduit in a foundation and between a foundation and the nearest pull box shall be Type 1.

When Type 3 conduit is placed in a trench (not in pavement or under portland cement concrete sidewalk), after the bedding material is placed and the conduit is installed, the trench shall be backfilled to not less than 4 inches above the conduit with minor concrete conforming to the provisions in Section 90-10, "Minor Concrete," of the Standard Specifications, except the concrete shall contain not less than 421 pounds of cementitious material per cubic yard. The remaining trench shall be backfilled to finished grade with backfill material.

Conduit runs shown on the plans to be located behind curbs may be installed in the street, within 3 feet of, and parallel with the face of the curb, by the trenching in pavement method in conformance with the provisions in Section 86-2.05C, "Installation," of the Standard Specifications. Pull boxes shall be located behind the curb or at the locations shown on the plans.

After conductors have been installed, the ends of conduits terminating in pull boxes, service equipment enclosures, and controller cabinets shall be sealed with an approved type of sealing compound.

At those locations where conduit is required to be installed under pavement and underground facilities designated as high priority subsurface installation under Govt Code § 4216 et seq. exist, conduit shall be placed by the trenching in pavement method in conformance with the provisions in Section 86-2.05C, "Installation," of the Standard Specifications.

At other locations where conduit is required to be installed under pavement and if a delay to vehicles will not exceed 5 minutes, conduit may be installed by the "Trenching in Pavement Method."

10-3.__ PULL BOX

GENERAL

Summary

This work includes installing a non-traffic-rated pull box as shown on the plans and as specified in these special provisions. Comply with Section 86-2.06, "Pull Boxes," of the Standard Specifications.

Submittals

Before shipping pull boxes to the jobsite, submit a list of materials, Contract number, pull box manufacturer, manufacturer's instructions for pull box installation, and your contact information to the Transportation Laboratory.

Submit reports for pull box from an NRTL-accredited lab to the Engineer.

Quality Control and Assurance

Pull boxes may be tested by the Department. Deliver pull boxes and covers to the Transportation Laboratory and allow 30 days for testing. When testing is complete, you will be notified. You must pick up the boxes and covers from the test site and deliver it to the job site.

Any failure of the pull box or the cover that renders the unit noncompliant with these specifications will be a cause for rejection. If the unit is rejected, you must allow 30 days for retesting. Retesting period starts when the replacement pull box is delivered to the test site. You

must pay for all retesting costs. Delays resulting from submittal of noncompliant materials does not relieve you from executing the contract within the allotted time.

If the pull box submitted for testing does not comply with the specifications, remove the unit from the test site within 5 business days after notification that it is rejected. If the unit is not removed within that period, it may be shipped to you at your expense.

You must pay for all shipping, handling, and transportation costs related to the testing and retesting.

Functional Testing

The pull box and cover must be tested under ANSI/SCTE 77, "Specifications for Underground Enclosure Integrity."

Warranty

Provide a 2-year manufacturer replacement warranty for pull box and cover from the date of installation of the pull box and cover. All warranty documentation must be submitted to the Engineer before installation.

Replacement parts must be provided within 5 business days after receipt of failed pull box, cover, or both at no cost to the Department and must be delivered to the Department's Maintenance Electrical Shop at Caltrans Maintenance Electrical Shop at 30 Rickard Street, San Francisco, CA 94134, phone (415) 330-6500.

MATERIALS

The pull box and cover must comply with ANSI/SCTE 77, "Specifications for Underground Enclosure Integrity," for Tier 22 load rating and must be gray or brown in color.

Each pull box cover must have an electronic marker cast inside.

Extension for the pull box must be of the same material as the pull box and attached to the pull box to maintain the minimum combined depths as shown.

Include recesses for a hanger if a transformer or other device must be placed in a pull box.

The bolts, nuts, and washers must be a captive bolt design.

The captive bolt design must be capable of withstanding a torque range of 55 to 60 ft-lb and a minimum pull out strength of 750 lb. Perform the test with the cover in place and the bolts torqued. The pull box and cover must not be damaged while performing the test to the minimum pull out strength.

Stainless steel hardware must have an 18 percent chromium content and an 8 percent nickel content.

Galvanize ferrous metal parts under Section 75-1.05, "Galvanizing."

Manufacturer's instructions must provide guidance on:

1. Quantity and size of entries that can be made without degrading the strength of the pull box below Tier 22 load rating
2. Where side entries cannot be made
3. Acceptable method to be used to create the entry

Tier 22 load rating must be labeled or stenciled by the manufacturer on the inside and outside of the pull box and on the underside of the cover.

CONSTRUCTION

Do not place grout in the bottom of the pull box.

Do not install pull box in curb ramps or driveways.

A pull box for a post or a pole standard must be located within 5 feet of the standard. Place a pull box adjacent to the back of the curb or edge of the shoulder. If this is impractical, place the pull box in a suitable, protected, and accessible location.

Bury pull box in soil 6 inches to 8 inches below grade. Cover the pull box with a plastic sheet before burying it.

Plastic sheets must be 20 mil thick and made of HDPE or PVC virgin compounds.

10-3.__ CONDUCTORS, CABLES, AND WIRING

Splices shall be insulated by "Method B".

Conductors shall be wrapped around projecting end of conduit in pull boxes, as shown on the plans. Cables shall be secured to the projecting end of conduit in pull boxes to prevent pulling of cables without removing the securing device.

Telephone Cable

The telephone cable (TC) shall consist of 6 pairs of No. 19 solid copper conductors. Conductors shall be twisted in pairs. Each conductor shall be insulated with a high molecular weight, heat stabilized, color coded polyethylene material. The insulation shall be 18-mils nominal.

Color code for TC cable shall be as follows:

1. White/Blue
2. White/Orange
3. White/Green
4. White/Brown
5. White/Gray
6. Red/Blue

The core shall be protected by a non-hygroscopic polyester film with a single longitudinally applied 5-mils thick corrugated copper shield 8-mils thick plastic coated aluminum shield). A moisture barrier of petrolatum-polyethylene compound shall be applied over the core tape and over and under the cable shield to fill all cable interstices.

The cable shall be provided with an outer jacket of extruded, black, high molecular weight, heat stabilized polyethylene material. The outer jacket shall have a thickness of 60-mils nominal. The outer diameter of the cable shall be 0.60-inch maximum.

All conductors shall be terminated inside the telephone demarcation cabinet and the controller cabinet as shown on the plans. All connections from the terminal block TB0 to the 8-position connecting block shall be via a cable consisting of 2 pairs of No. 22 solid conductors and shall meet the same specifications as the TC cable.

10-3.__ SERVICE

Service equipment enclosures shall be the aluminum type.

Circuit breakers shall be the cable-in/cable-out type, mounted on non-energized clips. All circuit breakers shall be mounted vertically with the up position of the handle being the "ON" position.

Each service shall be provided with up to 2 main circuit breakers which shall disconnect ungrounded service entrance conductors. Where the "Main" circuit breaker consists of 2 circuit

breakers as shown on the plans or required in the special provisions, each of the circuit breakers shall have a minimum interrupting capacity of 10,000 A, rms.

10-3.__ STATE-FURNISHED CONTROLLER ASSEMBLIES

The Model 2070 controller assemblies, excluding anchor bolts, will be State-furnished as provided under "Materials" of these special provisions.

The Contractor shall construct each controller cabinet foundation as shown on the plans for Model 332 and 334 cabinets (including furnishing and installing anchor bolts), shall install the controller cabinet on the foundation, and shall make field wiring connections to the terminal blocks in the controller cabinet.

A listing of field conductor terminations, in each State-furnished controller cabinet, will be furnished free of charge to the Contractor at the site of the work.

State forces will maintain controller assemblies. The Contractor's responsibility for controller assemblies shall be limited to conforming to the provisions in Section 6-1.02, "State-Furnished Materials," of the Standard Specifications.

10-3.__ LIGHT EMITTING DIODE SIGNAL MODULE

GENERAL

Summary

This work includes installing LED signal module. Comply with Section 86, "Electrical Systems," of the Standard Specifications.

Use LED signal module as the light source for the following traffic signal faces:

1. 12-inch section
2. 8-inch section

Submittals

Before shipping LED signal modules to job site, submit the following to the Transportation Laboratory:

1. Delivery form including district number, EA, and contact information
2. List containing all LED signal module serial numbers anticipated for use
3. LED signal modules

Quality Control and Assurance

Module must be one listed on the Pre-Qualified Products List for LED traffic signals at:

http://www.dot.ca.gov/hq/esc/approved_products_list

The State will test LED signal module shipments as specified in ANSI/ASQ Z1.4.. Testing will be completed within 30 days of delivery to the Transportation Laboratory. LED signal modules tested or submitted for testing must be representative of typical production units. LED and circular LED signal modules will be tested as specified in California Test 604. Arrow, U-turn, and bicycle LED signal modules will be tested as specified in California Test 3001. All parameters of the specification may be tested on the modules. LEDs must be spread evenly across the module. LED arrow indication must provide the minimum initial luminous intensity listed. Measurements will be performed at the rated operating voltage of 120 V(ac).

Delays resulting from submittal of non-compliant materials do not relieve you from executing the contract within the allotted time. Non-compliant materials will be rejected. You must resubmit new LED for retesting and pick up the failed units within 7 days of notification. You must provide new LED signal modules and allow a minimum of 30 days for the retest. You must pay for all shipping and handling costs related to testing and retesting. Delays resulting from resubmittal and retesting are your responsibility and no extra time will be allowed.

After testing, you must pick up the tested LED signal modules from the Transportation Laboratory and deliver to the job site.

Warranty

The manufacturer must provide a written warranty against defects in materials and workmanship for LED signal modules for a minimum period of 48 months after installation of LED signal modules. Replacement LED signal modules must be provided within 15 days after receipt of failed LED modules at your expense. The State pays for shipping the failed modules to you. All warranty documentation must be submitted to the Engineer before installation. Replacement LED signal modules must be delivered to State Maintenance Electrical Shop at

Caltrans Maintenance Electrical Shop at 30 Rickard Street, San Francisco, CA 94134, phone (415) 330-6500.

MATERIALS

Minimum power consumption for LED signal module must be 5 W.

LED signal module must have an operational lifecycle rating of 48 months. During the operational lifecycle, LED signal module must meet all parameters of this specification.

LED signal module must be designed for installation in the door frame of standard traffic signal housing.

LED signal module must:

1. Be 4 pounds maximum weight
2. Be manufactured for 12-inch circular, 8-inch circular3. Be from the same manufacturer
4. Be the same model for each size
5. Be sealed units with:

    5.1. 2 color-coded conductors for power connection, except for lane control LED signal modules use 3 color-coded conductors.
    5.2. Printed circuit board and power supply contained inside and complying with Chapter 1, Section 6 of TEES published by the Department.
    5.3. Lens that is:

        5.3.1. Integral to the units
        5.3.2. Convex or flat with a smooth outer surface
        5.3.3. Made of UV stabilized plastic or glass, and withstands UV exposure from direct sunlight for 48 months without exhibiting evidence of deterioration

    5.4. 1-piece EPDM gasket

6. Include 3-foot long conductors with quick disconnect terminals attached
7. Be sealed in door frames
8. Fit into existing traffic signal section housing and comply with ITE publication, Equipment and Material Standards, Chapter 2, "Vehicle Traffic Control Signal Heads"

Individual LEDs must be wired so catastrophic loss or failure of 1 LED will not result in loss of more than 5 percent of the signal module light output. Failure of an individual LED in a string must not result in loss of entire string or other indication.

No special tools for installation are allowed.

LED signal module must:

1. Be weather tight and connect directly to electrical wiring.
2. Be capable of optical unit replacement.
3. Be a single, self-contained device, ready for installation into traffic signal housing.
4. Have manufacturer's name, trademark, model number, serial number, lot number, month and year of manufacture, and required operating characteristics, including rated voltage, power consumption, and volt-ampere, permanently marked on the back of the module.

5. Have a symbol of module type and color. Symbol must be an inch in diameter. Color must be written out in 0.50 inch high letters next to the symbol.
6. Be AlInGaP technology for red and yellow indications and gallium nitride technology for green indications.
7. Be ultra bright type rated for 100,000 hours of continuous operation from -40 °C to +74 °C.
8. Have a maximum power consumption as follows:

Power Consumption Requirements

LED Signal Module Type	Power Consumption (Watts)					
	Red		Yellow		Green	
	25 °C	74 °C	25 °C	74 °C	25 °C	74 °C
12-inch circular	11	17	22	25	15	15
8-inch circular	8	13	13	16	12	12
12-inch arrow	9	12	10	12	11	11
12-inch U-turn	9	12	10	12	11	11
Bicycle	11	17	22	25	15	15
Programmed Visibility	11	17	22	25	15	15
Lane Control (X)	9	12	--	--	--	--
Lane Control (Arrow)	--	--	--	--	11	11

Lens may be tinted, or may use transparent film or materials with similar characteristics to enhance "ON/OFF" contrasts. Tinting or other materials to enhance "ON/OFF" contrast must not affect chromaticity and must be uniform across the face of the lens.

If polymeric lens is used, surface coating or chemical surface treatment must be applied for front surface abrasion resistance.

Power supply must be integral to the module.

Internal components must be adequately supported to withstand mechanical shock and vibration from high winds and other sources.

Lens and LED signal module material must comply with the ASTM specifications for that material.

Enclosures containing either the power supply or electronic components of LED signal module, except lenses, must be made of UL94VO flame-retardant material.

If a specific mounting orientation is required, the LED signal module must have prominent and permanent vertical markings for accurate indexing and orientation within the signal housing. Markings must include an up arrow, or the word "UP" or "TOP."

LED signal module must meet or exceed the following values when operating at 25 °C:

Minimum Initial Intensities for Circular Indications (cd)

Angle (v,h)	8-inch			12-inch		
	Red	Yellow	Green	Red	Yellow	Green
2.5, ±2.5	157	314	314	399	798	798
2.5, ±7.5	114	228	228	295	589	589
2.5, ±12.5	67	133	133	166	333	333
2.5, ±17.5	29	57	57	90	181	181
7.5, ±2.5	119	238	238	266	532	532
7.5, ±7.5	105	209	209	238	475	475
7.5, ±12.5	76	152	152	171	342	342
7.5, ±17.5	48	95	95	105	209	209
7.5, ±22.5	21	43	43	45	90	90
7.5, ±27.5	12	24	24	19	38	38
12.5, ±2.5	43	86	86	59	119	119
12.5, ±7.5	38	76	76	57	114	114
12.5, ±12.5	33	67	67	52	105	105
12.5, ±17.5	24	48	48	40	81	81
12.5, ±22.5	14	29	29	26	52	52
12.5, ±27.5	10	19	19	19	38	38
17.5, ±2.5	19	38	38	26	52	52
17.5, ±7.5	17	33	33	26	52	52
17.5, ±12.5	12	24	24	26	52	52
17.5, ±17.5	10	19	19	26	52	52
17.5, ±22.5	7	14	14	24	48	48
17.5, ±27.5	5	10	10	19	38	38

LED signal module must meet or exceed the following illumination values for 48 months when operating over a temperature range of -40 °C to + 74 °C. Yellow LED signal module must meet or exceed the following illumination values for 48 months, when operating at 25 °C:

Minimum Maintained Intensities for Circular Indications (cd)

	8-inch			12-inch		
Angle (v,h)	Red	Yellow	Green	Red	Yellow	Green
2.5, ±2.5	133	267	267	339	678	678
2.5, ±7.5	97	194	194	251	501	501
2.5, ±12.5	57	113	113	141	283	283
2.5, ±17.5	25	48	48	77	154	154
7.5, ±2.5	101	202	202	226	452	452
7.5, ±7.5	89	178	178	202	404	404
7.5, ±12.5	65	129	129	145	291	291
7.5, ±17.5	41	81	81	89	178	178
7.5, ±22.5	18	37	37	38	77	77
7.5, ±27.5	10	20	20	16	32	32
12.5, ±2.5	37	73	73	50	101	101
12.5, ±7.5	32	65	65	48	97	97
12.5, ±12.5	28	57	57	44	89	89
12.5, ±17.5	20	41	41	34	69	69
12.5, ±22.5	12	25	25	22	44	44
12.5, ±27.5	9	16	16	16	32	32
17.5, ±2.5	16	32	32	22	44	44
17.5, ±7.5	14	28	28	22	44	44
17.5, ±12.5	10	20	20	22	44	44
17.5, ±17.5	9	16	16	22	44	44
17.5, ±22.5	6	12	12	20	41	41
17.5, ±27.5	4	9	9	16	32	32

LED signal module must comply with the following chromaticity requirements for 48 months when operating over a temperature range of -40 °C to +74 °C.

Chromaticity Standards (CIE Chart)

Red	Y: not greater than 0.308, or less than 0.998 -x
Yellow	Y: not less than 0.411, nor less than 0.995 - x, nor greater than 0.452
Green	Y: not less than 0.506 - 0.519x, nor less than 0.150 + 1.068x, nor more than 0.730 - x

LED signal module must operate:

1. At a frequency of 60 Hz ± 3 Hz, over a voltage range from 95 V(ac) to 135 V(ac), without perceptible flicker to the unaided eye. Fluctuations of line voltage must have no visible effect on luminous intensity of the indications. Rated voltage for measurements must be 120 V(ac).
2. Compatible with currently used controller assemblies, including solid state load switches, flashers, and conflict monitors. Comply with TEES Chapters 3 and 6. If a 20 mA alternating current or less is applied to the unit, the voltage read across the 2 leads must be 15 V(ac) or less.

Wiring and terminal block must comply with Section 13.02 of ITE publication, Equipment and Material Standards, Chapter 2, "Vehicle Traffic Control Signal Heads." Electrical connection for each Type 1 LED signal module must be 2 secured, color-coded, 3-foot long, 600

V(ac), 20 AWG minimum stranded jacketed copper wires. Wires must comply with NEC, rated for service at +105 °C.

LED signal module on-board circuitry must:

1. Include voltage surge protection to withstand high-repetition noise transients. The voltage surge protection must comply with NEMA Standard TS2, Section 2.1.6.
2. Comply with FCC, Title 47, SubPart B, Section 15 regulations for Class A emission limits for electronic noise.

LED signal module must provide a power factor of 0.90 or greater.

Total harmonic distortion from current and voltage induced into an alternating current power line by LED signal module must not exceed 20 percent at an operating temperature of 25 °C.

When power is applied to LED signal module, light emission must occur within 90 ms.

10-3.__ INTERNALLY ILLUMINATED SIGNS

The "METER ON" sign shall be a Type A pedestrian signal modified so that the reflector shall be a single chamber with 2 incandescent lamps.

The message shall be white "METER ON" as shown on the plans. White color shall be in conformance with the provisions in Section 86-4.06, "Pedestrian Signal Faces," of the Standard Specifications.

Lenses shall be 3/16 inch, minimum thickness, clear acrylic or polycarbonate plastic or 1/8 inch nominal thickness glass fiber reinforced plastic, with molded, one piece, neoprene gasket. Message lettering for "METER" shall be "Series C," 4-1/2 inches high, with uniform 1/2 inch stroke, and for "ON" shall be "Series C," 6 inches high, with uniform one inch stroke. Letters shall be clear, transparent or translucent, with black opaque background silk screened on to the second surface of the lens.

10-3.19 GENERAL PACKET RADIO SYSTEM WIRELESS MODEM ASSEMBLY

GENERAL

The Contractor shall furnish and install the general packet radio system (GPRS) wireless modem assembly at the ramp metering controller cabinets as shown on the plans.

The GPRS wireless modem assembly shall be configured with the following major components:

1. Modem
2. Power supply
3. Modem mounting bracket and hardware
4. Serial communication cable – Type D
5. Antenna

ACRONYMS

APN -Access Point Name
IMEI -International Mobile Equipment Identification
IP - Internet Protocol
PCCA -Portable Computer and Communications Association
PDP - Packet Data Protocol
PPP - Point to Point Protocol
SIM - Subscriber Identity Module

TCP - Transmission Control Protocol
UDP - User Datagram Protocol

CERTIFICATE OF COMPLIANCE

The Contractor shall provide the Engineer with a Certificate of Compliance from the manufacturer in accordance with the provisions of Section 6-1.07, "Certificates of Compliance" of the Standard Specifications for all of the modems and power supplies furnished for the project.

WARRANTY

The Contractor must provide from the manufacturer a written warranty against defects in materials and workmanship for modems and power supplies for a period of 12 months after installation. Replacement modems and power supplies must be provided within 5 days after receipt of failed modem and power supply. The State pays for shipping the failed modem and power supply. All warranty documentation must be provided to the Engineer prior to installation. Replacement modem and power supplies must be delivered to Caltrans Maintenance Electrical Shop at 30 Rickard Street, San Francisco, CA 94134, phone (415) 330-6500.

MODEM

All modems shall be configurable remotely through the wireless network and through the modem serial port. The Contractor shall configure all modems prior to acceptance. The Contractor shall provide the Engineer with the modem serial, SIM and IMEI numbers 30 days prior to requiring the PDP context. The Engineer will make available the PDP context comprising the IP (assigned) and APN (obtained from service provider). All modems shall be complete with all cables, conductors, hardware, antenna and other equipment as required to make the system completely operational. Location and mounting of the equipment shall be as shown on the plans and as directed by the Engineer. The modems shall be fully compliant with PCCA STD-101.

Environmental Requirements

The operating temperature of the modem shall range from -30 to +70 °C, with humidity from 5 to 95 percent (non-condensing) and have transmissions at 10 percent duty cycle above 60 °C.

Physical Characteristics

The modem shall weigh less than 2 lbs and have overall dimensions of less than 7 1/8 inches × 3-1/2 inches × 1-1/8 inches. The housing shall be constructed of anodized aluminum.

The modem shall have the following status indicators:

1. Power (on).
2. Channel acquired.
3. Link status.
4. Network registration.
5. Received signal strength indicator.
6. Transmit and receive data.
7. Block errors.

Operational Parameters

The modem shall operate in a dynamic IP addressing environment of GPRS networks at 1900/850 MHz and meet the following operational parameters:

Receiver sensitivity	-107 dBm (2.439 percent bit error rate)
Input voltage	From 10 to 28 V(dc)
Input current	From 40 mA to 200 mA

Application Interfaces

The modem shall have the following standard interfaces:

1. The AT command serial character stream uses TCP/IP.
2. Host communicates with modem using either UDP or TCP packet modes.
3. Computer terminal platform using Windows 2000/XP and Dial-Up Networking communicates with the modem using PPP.

Features

The modem shall have the following features:

1. 53.6 kbps raw data transfer rate minimum.
2. Full duplex transceiver.
3. 1900/850 MHz dual band networking.
4. Integrated TCP/IP protocol stack with UDP.
5. User settable password to prevent unauthorized access.
6. Includes a DC power cable at least 40 inches in length with a connector compatible with the modem power connector.
7. Packet buffering and forwarding feature that provides discipline to the output of the serial port. The packet forwarding time interval shall be configurable from a rate of 0 (undisciplined) to 400 ms in increments of 100 ms or less.
8. Choice of "Friends Only" access mode.

System Compliance

The modem and associated firmware, software, hardware, protocol, and other features shall be fully and completely compatible with the existing GPRS network currently in use. The existing GPRS network utilizes the AT&T wireless cellular system (band compatible with this modem), the AirLink Raven GPRS modem, and the AirLink Gateway. The Contractor shall demonstrate the compatibility to the Engineer by actual installation demonstration or by other means approved by the Engineer.

Installation

The installation of the modem shall be according to the plans, the manufacturer's instructions, and adjusted per field conditions with the Engineers approval.

POWER SUPPLY

The power supply shall be vertically mountable on a 19-inch standard rack rail using two machine screws and two wing nuts. The power supply shall have provisions to attach the modem power cable securely without the need for modifying the modem power cable.

The power supply shall meet the following requirements:

Power Cord	Standard 120 V(ac), 3 prong cord, at least 40 inches in length (may be added by Contractor)
Type	Switching mode type
Power Rated	40 W minimum with no minimum load required
Operating Temperature Range	From -30 to +70 °C
Operating Humidity Range	From 5 to 95 percent non-condensing
Input Voltage	From 85 to 264 V(ac) or 120 to 370 V(dc)
Input Frequency	From 47 to 63 Hz
Inrush Current	Cold start, 25 A at 115 V
Output Voltage	12 V(dc), adjustable over a ±10 percent range
Overload Protection	From 105 to 150 percent in output pulsing mode
Over Voltage Protection	From 115 to 135 percent of output voltage
Setup, Rise, Hold Up Time	800 ms, 50 ms,15 ms at 115 V(ac)
Withstand Voltage	I/P-0/P:3 kV, I/P-FG:1.5 kV, for 60 seconds
Working Temperature*	70 °C at 30 percent
Safety Standards	UL 1012, UL60950

Note: A substitute may be proposed by the Contractor which meets the 70 °C environmental rating at a lower load percentage as long as the temperature rating is maintained at the maximum modem load and all other electrical specifications are met.

MODEM MOUNTING BRACKET AND HARDWARE

The mounting bracket and hardware shall be stainless steel. The mounting bracket shall securely hold the modem in a vertical position with all cables and conductors installed. The mounting bracket shall contain the modem using a method that allows the removal of the modem without tools or without removing the bracket from its attachment to the cabinet frame.

SERIAL COMMUNICATION CABLE – TYPE D

Where the modem is designed to interface with a State-furnished Model 170E controller, the Contractor shall provide a communication cable known as the C2 cable. The C2 cable shall interface the State-furnished Model 170E controller C2 connector and the GPRS modem and include all conductors and connectors required for that purpose. The GPRS modem connector shall meet TIA-232 standard using a 9 pin Type D connector. The State-furnished Model 170E controller end connector shall comply with AMP 201360-2-ND or equivalent. All pins in both connectors shall be gold plated. The cable shall have four No. 20 AWG conductors with (UL) Type CM shielded or AWM 2464 80C 300 Volts – C (UL) CMG. The cable shall be at least 3 feet long. The cable wiring shall comply with the following:

1. AMP 201360-2-ND -L to DB9-P - 2
2. AMP 201360-2-ND -K to DB9-P - 3
3. AMP 201360-2-ND -N to DB9-P - 5
4. AMP 201360-2-ND -D to AMP 201360-2-ND - H
5. AMP 201360-2-ND -J to AMP 201360-2-ND - M

ANTENNA

The antenna shall be the low profile disc type and adhere to the cabinet using a factory installed double-sided waterproof acrylic foam adhesive. The coax cable shall be at least 40 inches in length and shall have a 50 Ω TNC connector on the modem end. In addition, the antenna shall meet the following requirements:

VSWR (at resonant point)	2:1 or less
Frequency	From 1850 to 1990 MHz and from 824 to 894 MHz
Nominal Impedance	50 Ω
Gain	2 dB
Radiation Pattern	Omni-directional
Polarization	Vertical
Ground Plane Required	Yes, see note below

Ground plane requirements: The antenna shall require a reflective ground plane to function properly. The required ground plane shall extend beyond the antenna at least 8 inches in all directions.

Dist	COUNTY	ROUTE	POST MILES TOTAL PROJECT	SHEET No.	TOTAL SHEETS
04	CC	4,242	R13.9/23.2 0.0/3.4	1	40

INDEX OF PLANS

SHEET No.	DESCRIPTION
1	TITLE SHEET
2	LOCATIONS OF CONSTRUCTION
3-25	RAMP METERING SYSTEM
26-40	REVISED AND NEW STANDARD PLANS

THE STANDARD PLANS LIST APPLICABLE TO THIS CONTRACT IS INCLUDED IN THE NOTICE TO BIDDERS AND SPECIAL PROVISIONS BOOK.

FEDERAL ID No. STP-6160(022)
METROPOLITAN TRANSPORTATION COMMISSION

PROJECT PLANS FOR CONSTRUCTION ON
STATE HIGHWAY
IN CONTRA COSTA COUNTY
AT VARIOUS LOCATIONS

TO BE SUPPLEMENTED BY STANDARD PLANS DATED 2010

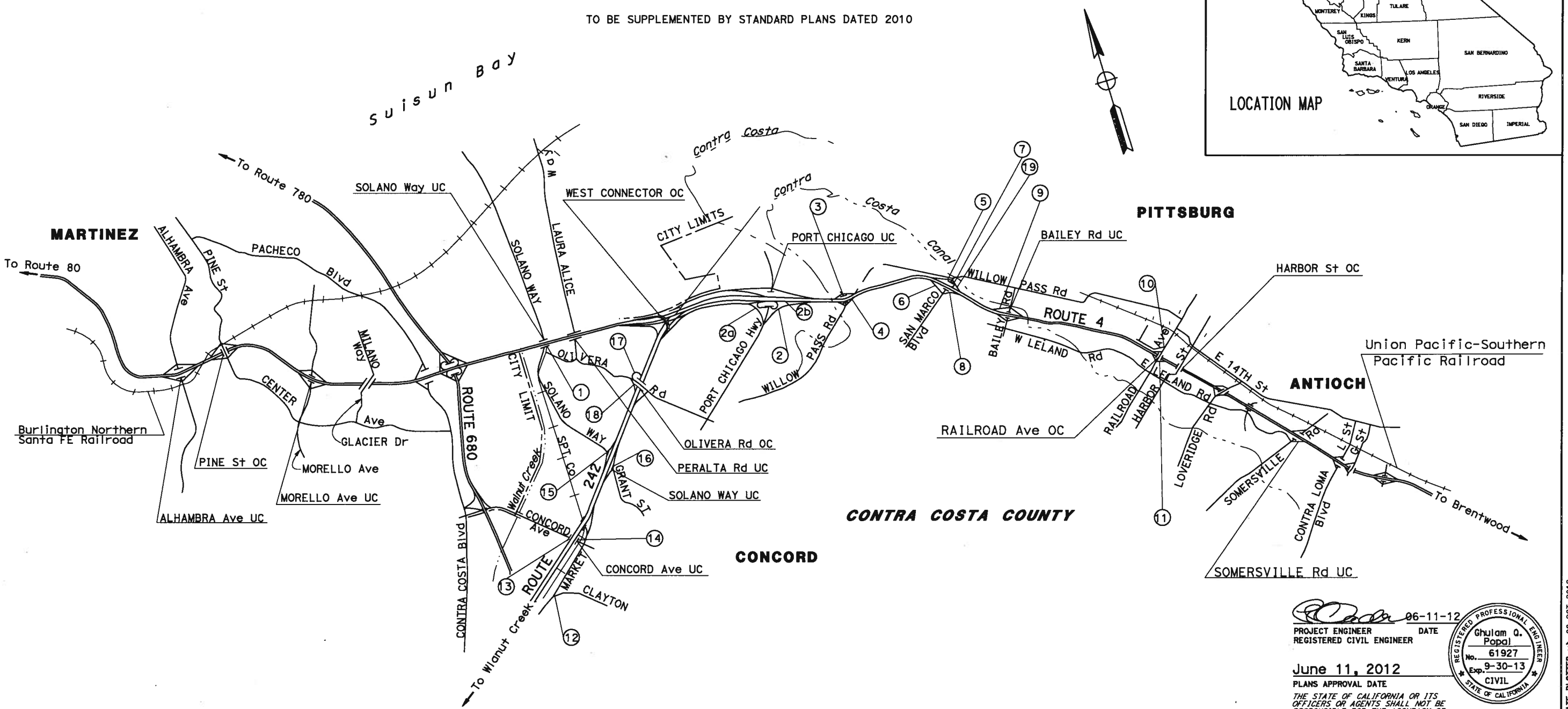

NOTE:
THE TABLE OF LOCATIONS OF CONSTRUCTION IS SHOWN ON THE LOCATIONS OF CONSTRUCTION SHEET.

THE CONTRACTOR SHALL POSSESS THE CLASS (OR CLASSES) OF LICENSE AS SPECIFIED IN THE "NOTICE TO BIDDERS."

06-11-12
PROJECT ENGINEER DATE
REGISTERED CIVIL ENGINEER

June 11, 2012
PLANS APPROVAL DATE

THE STATE OF CALIFORNIA OR ITS OFFICERS OR AGENTS SHALL NOT BE RESPONSIBLE FOR THE ACCURACY OR COMPLETENESS OF SCANNED COPIES OF THIS PLAN SHEET.

REGISTERED PROFESSIONAL ENGINEER
Ghulam Q. Popal
No. 61927
Exp. 9-30-13
CIVIL
STATE OF CALIFORNIA

CONTRACT No.	04-152714
PROJECT ID	0412000629

PROJECT MANAGER: LAURIE LAU
DESIGN ENGINEER: ZIAD ABUBEKR

LAST REVISION 10-05-12
DATE PLOTTED => 08-OCT-2012
TIME PLOTTED => 06:51

Dist	COUNTY	ROUTE	POST MILES TOTAL PROJECT	SHEET No.	TOTAL SHEETS
04	CC	4,242	R13.9/23.2, 0.0/3.4	2	40

REGISTERED CIVIL ENGINEER 06-11-12 DATE

June 11, 2012
PLANS APPROVAL DATE

REGISTERED PROFESSIONAL ENGINEER
Ghulam Q. Popal
No. 61927
Exp 9-30-13
CIVIL
STATE OF CALIFORNIA

THE STATE OF CALIFORNIA OR ITS OFFICERS OR AGENTS SHALL NOT BE RESPONSIBLE FOR THE ACCURACY OR COMPLETENESS OF SCANNED COPIES OF THIS PLAN SHEET.

STATE OF CALIFORNIA
DEPARTMENT OF TRANSPORTATION
111 GRAND AVE
OAKLAND, CA. 94623

METROPOLITAN
TRANSPORTATION
COMMISSION
101 EIGHTH STREET
OAKLAND, CA. 94607

LOCATION No.	COUNTY	ROUTE	PM	DIRECTION	RAMP LOCATIONS
1	CC	4	R13.936	EB	EB ON FREEWAY RAMP SOLANO WAY
2	CC	4	R15.603	EB	SEGMENT EB ON FREEWAY RAMP SB CHICAGO (LOOP RAMP)
2a	CC	4	R15.604	EB	SEGMENT EB ON FROM NB CHICAGO (Diag)
2b	CC	4	R15.753	EB	EB ON-RAMP FROM PORT CHICAGO
3	CC	4	R16.688	WB	WB ON FREEWAY RAMP WILLOW PASS ROAD
4	CC	4	R17.181	EB	EB ON FREEWAY RAMP WILLOW PASS ROAD
5	CC	4	R18.571	WB	WB ON FREEWAY RAMP SB WILLOW PASS/ SAN MARCO ROAD (Diag)
6	CC	4	R18.727	EB	EB ON FREEWAY RAMP SB WILLOW PASS/ SAN MARCO ROAD (LOOP)
7	CC	4	R18.810	WB	WB ON FREEWAY RAMP NB WILLOW PASS/ SAN MARCO ROAD (LOOP)
8	CC	4	R18.964	EB	EB ON FREEWAY RAMP NB WILLOW PASS/ SAN MARCO ROAD (Diag)
9	CC	4	R19.950	WB	WB ON FREEWAY RAMP BAILEY ROAD
10	CC	4	22.824	WB	WB ON FREEWAY RAMP RAILROAD AVENUE
11	CC	4	23.161	EB	EB ON FREEWAY RAMP RAILROAD AVENUE
12	CC	242	R0.663	SB	CLAYTON / MARKET St. (Diag)
13	CC	242	R1.457	SB	CONCORD AVENUE (LOOP)
14	CC	242	R1.499	NB	CONCORD AVENUE (LOOP)
15	CC	242	R2.046	SB	SOLANO WAY (Diag)
16	CC	242	R2.274	NB	SOLANO WAY (Diag)
17	CC	242	R2.733	SB	OLIVERA ROAD (Diag)
18	CC	242	R2.732	SB	OLIVERA ROAD (LOOP)
19	CC	4	R19.001	WB	WB OFF-RAMP TO WILLOW PASS/SAN MARCO Blvd

LOCATIONS OF CONSTRUCTION

LC-1

STATE OF CALIFORNIA - DEPARTMENT OF TRANSPORTATION
Caltrans DESIGN

FUNCTIONAL SUPERVISOR: ZIAD ABUBEKR
CALCULATED-DESIGNED BY: KATIE CHOUNRAMANY
CHECKED BY: GHULAM POPAL
REVISED BY: K.C.
DATE REVISED: 06/11/12

LAST REVISION DATE PLOTTED => 17-OCT-2012
TIME PLOTTED => 13:19
10-17-12

Dist	COUNTY	ROUTE	POST MILES TOTAL PROJECT	SHEET No.	TOTAL SHEETS
04	CC	4,242	R13.9/23.2, 0.0/3.4	3	40

REGISTERED ELECTRICAL ENGINEER — DATE: 06-07-12

PLANS APPROVAL DATE: June 11, 2012

REGISTERED PROFESSIONAL ENGINEER — Mahmood Noii — No. 13717 — Exp. 6-30-13 — ELECT — STATE OF CALIFORNIA

THE STATE OF CALIFORNIA OR ITS OFFICERS OR AGENTS SHALL NOT BE RESPONSIBLE FOR THE ACCURACY OR COMPLETENESS OF SCANNED COPIES OF THIS PLAN SHEET.

STATE OF CALIFORNIA
DEPARTMENT OF TRANSPORTATION
111 GRAND AVE
OAKLAND, CA. 94623

METROPOLITAN TRANSPORTATION COMMISSION
101 EIGHTH STREET
OAKLAND, CA. 94607

NOTE:

FOR ACCURATE RIGHT OF WAY DATA, CONTACT RIGHT OF WAY ENGINEERING AT THE DISTRICT OFFICE.

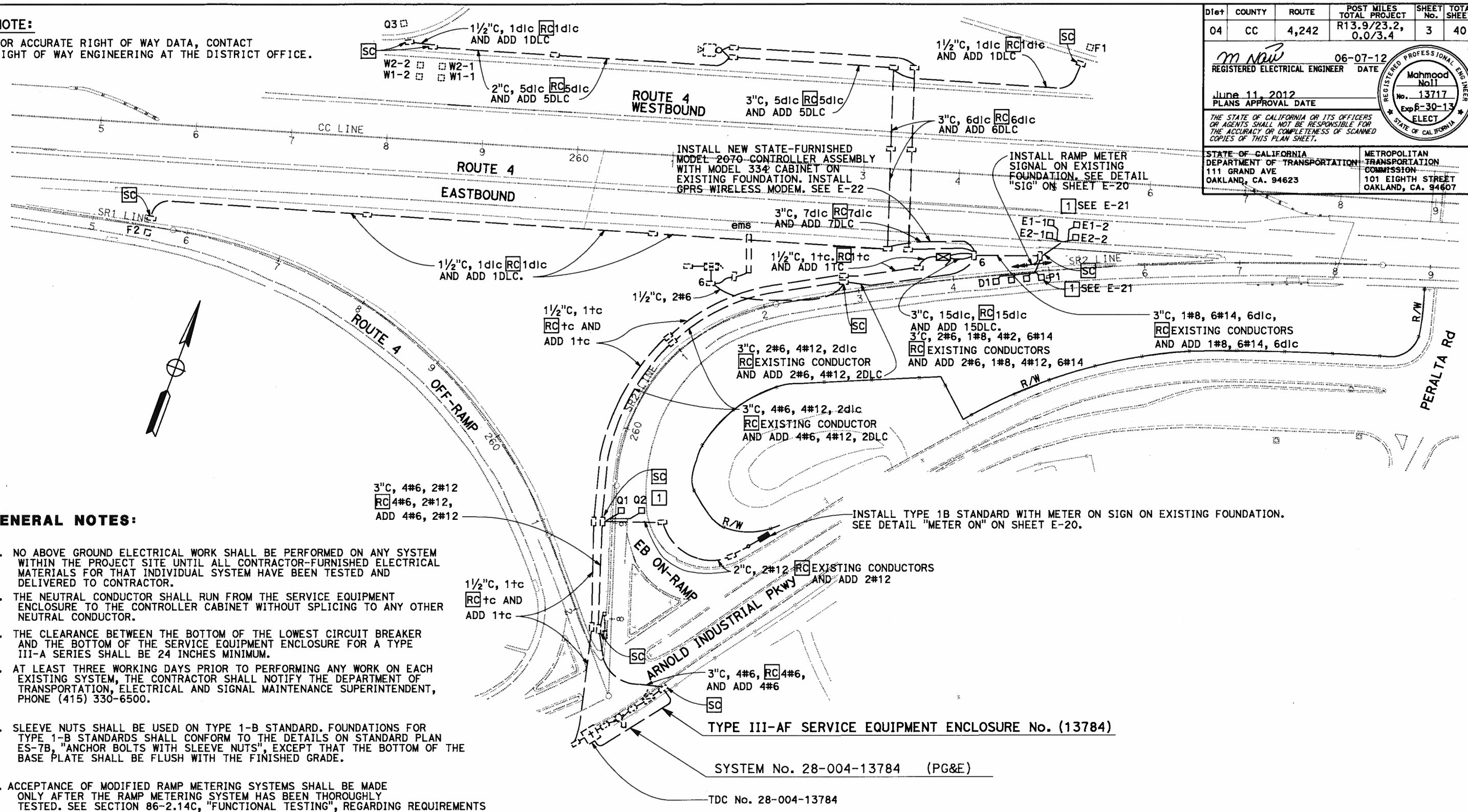

GENERAL NOTES:

1. NO ABOVE GROUND ELECTRICAL WORK SHALL BE PERFORMED ON ANY SYSTEM WITHIN THE PROJECT SITE UNTIL ALL CONTRACTOR-FURNISHED ELECTRICAL MATERIALS FOR THAT INDIVIDUAL SYSTEM HAVE BEEN TESTED AND DELIVERED TO CONTRACTOR.
2. THE NEUTRAL CONDUCTOR SHALL RUN FROM THE SERVICE EQUIPMENT ENCLOSURE TO THE CONTROLLER CABINET WITHOUT SPLICING TO ANY OTHER NEUTRAL CONDUCTOR.
3. THE CLEARANCE BETWEEN THE BOTTOM OF THE LOWEST CIRCUIT BREAKER AND THE BOTTOM OF THE SERVICE EQUIPMENT ENCLOSURE FOR A TYPE III-A SERIES SHALL BE 24 INCHES MINIMUM.
4. AT LEAST THREE WORKING DAYS PRIOR TO PERFORMING ANY WORK ON EACH EXISTING SYSTEM, THE CONTRACTOR SHALL NOTIFY THE DEPARTMENT OF TRANSPORTATION, ELECTRICAL AND SIGNAL MAINTENANCE SUPERINTENDENT, PHONE (415) 330-6500.
5. SLEEVE NUTS SHALL BE USED ON TYPE 1-B STANDARD. FOUNDATIONS FOR TYPE 1-B STANDARDS SHALL CONFORM TO THE DETAILS ON STANDARD PLAN ES-7B, "ANCHOR BOLTS WITH SLEEVE NUTS", EXCEPT THAT THE BOTTOM OF THE BASE PLATE SHALL BE FLUSH WITH THE FINISHED GRADE.
6. ACCEPTANCE OF MODIFIED RAMP METERING SYSTEMS SHALL BE MADE ONLY AFTER THE RAMP METERING SYSTEM HAS BEEN THOROUGHLY TESTED. SEE SECTION 86-2.14C, "FUNCTIONAL TESTING", REGARDING REQUIREMENTS FOR FUNCTIONAL TESTING OF THE RAMP METERING SYSTEMS.

PROJECT NOTES:

1 AB EXISTING DETECTORS AND INSTALL NEW DETECTORS AS SHOWN. INSTALL NEW LOOP CONDUCTORS THROUGH EXISTING DETECTOR TERMINATION CONDUIT.

2 RC EXISTING PULL BOX. INSTALL NEW PULL BOX AS SHOWN.

3 3"C, 1tc. 3"C, 1mt, 3"C, 19dlc, 6#14, 1#8
RC EXISTING CONDUCTORS AND INSTALL PULL ROPE.

RAMP METERING SYSTEM
(LOCATION 1, ROUTE 4)

SCALE: 1" = 50'

APPROVED FOR ELECTRICAL WORK ONLY

E-1

CALCULATED-DESIGNED BY	PIERRE LASSALLE	P.L.
CHECKED BY	MAHMOOD NOII	06/07/12
FUNCTIONAL SUPERVISOR	MAHMOOD NOII	REVISED BY / DATE REVISED

STATE OF CALIFORNIA - DEPARTMENT OF TRANSPORTATION — ELECTRICAL

LAST REVISION 10-05-12 — DATE PLOTTED => 05-OCT-2012 — TIME PLOTTED => 13:40

Dist	COUNTY	ROUTE	POST MILES TOTAL PROJECT	SHEET No.	TOTAL SHEETS
04	CC	4,242	R13.9/23.2, 0.0/3.4	4	40

REGISTERED ELECTRICAL ENGINEER — DATE: 06-07-12

PLANS APPROVAL DATE: June 11, 2012

REGISTERED PROFESSIONAL ENGINEER — Mahmood Noii — No. 13717 — Exp. 6-30-13 — ELECT — STATE OF CALIFORNIA

THE STATE OF CALIFORNIA OR ITS OFFICERS OR AGENTS SHALL NOT BE RESPONSIBLE FOR THE ACCURACY OR COMPLETENESS OF SCANNED COPIES OF THIS PLAN SHEET.

STATE OF CALIFORNIA
DEPARTMENT OF TRANSPORTATION
111 GRAND AVE
OAKLAND, CA. 94623

METROPOLITAN TRANSPORTATION COMMISSION
101 EIGHTH STREET
OAKLAND, CA. 94607

NOTE:

FOR ACCURATE RIGHT OF WAY DATA, CONTACT RIGHT OF WAY ENGINEERING AT THE DISTRICT OFFICE.

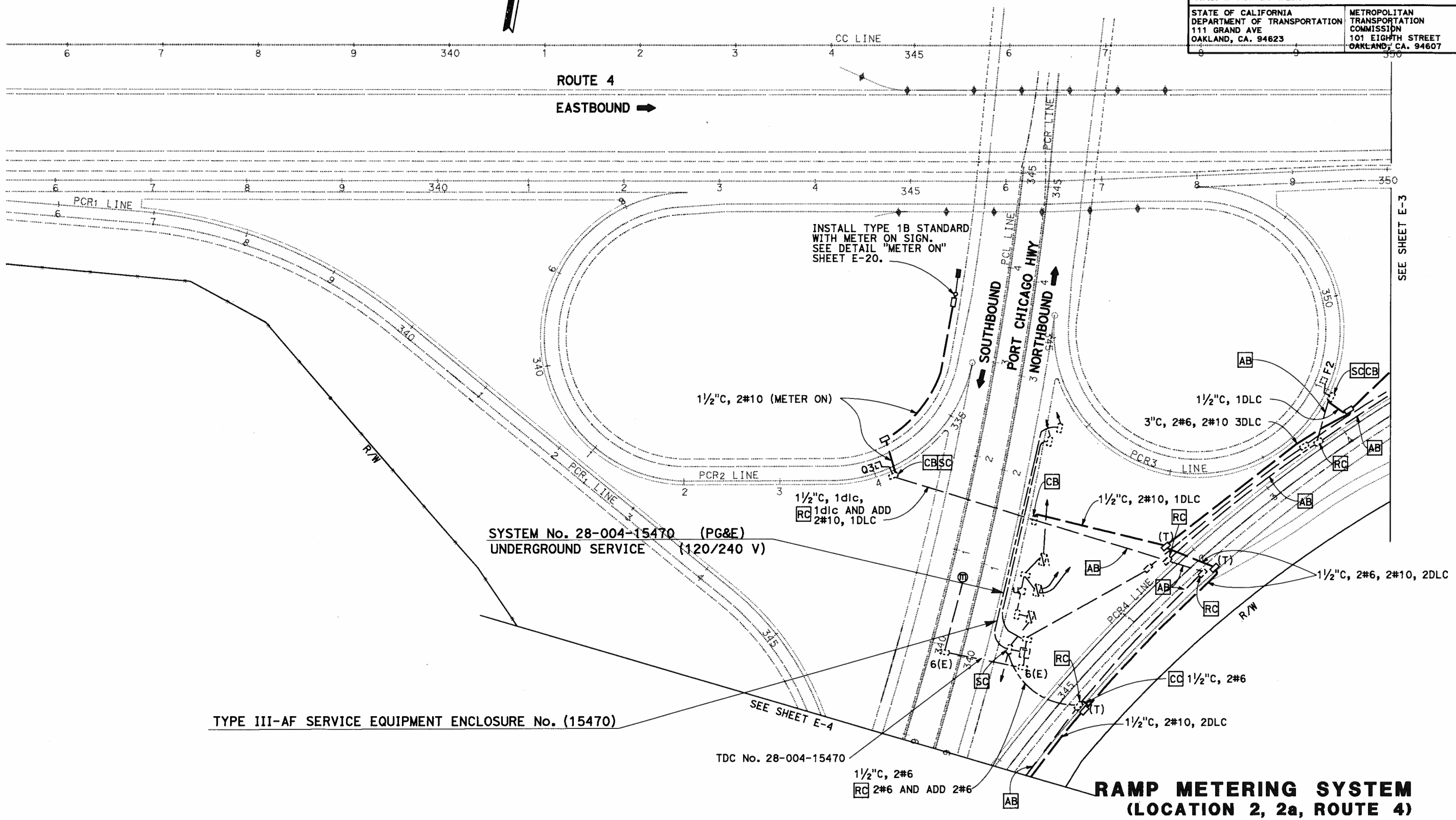

RAMP METERING SYSTEM
(LOCATION 2, 2a, ROUTE 4)

SCALE: 1" = 50'

APPROVED FOR ELECTRICAL WORK ONLY

E-2

REVISED BY	DATE REVISED
P.L.	06/07/12

CALCULATED-DESIGNED BY: PIERRE LASSALLE
CHECKED BY: MAHMOOD NOII
FUNCTIONAL SUPERVISOR: MAHMOOD NOII

STATE OF CALIFORNIA - DEPARTMENT OF TRANSPORTATION
ELECTRICAL

LAST REVISION 10-05-12 — DATE PLOTTED => 08-OCT-2012 — TIME PLOTTED => 07:12

Dist	COUNTY	ROUTE	POST MILES TOTAL PROJECT	SHEET No.	TOTAL SHEETS
04	CC	4,242	R13.9/23.2, 0.0/3.4	5	40

REGISTERED ELECTRICAL ENGINEER — DATE: 06-07-12

June 11, 2012
PLANS APPROVAL DATE

REGISTERED PROFESSIONAL ENGINEER — Mahmood Noii — No. 13717 — Exp. 6-30-13 — ELECT — STATE OF CALIFORNIA

THE STATE OF CALIFORNIA OR ITS OFFICERS OR AGENTS SHALL NOT BE RESPONSIBLE FOR THE ACCURACY OR COMPLETENESS OF SCANNED COPIES OF THIS PLAN SHEET.

STATE OF CALIFORNIA
DEPARTMENT OF TRANSPORTATION
111 GRAND AVE
OAKLAND, CA. 94623

METROPOLITAN TRANSPORTATION COMMISSION
101 EIGHTH STREET
OAKLAND, CA. 94607

NOTE:

FOR ACCURATE RIGHT OF WAY DATA, CONTACT RIGHT OF WAY ENGINEERING AT THE DISTRICT OFFICE.

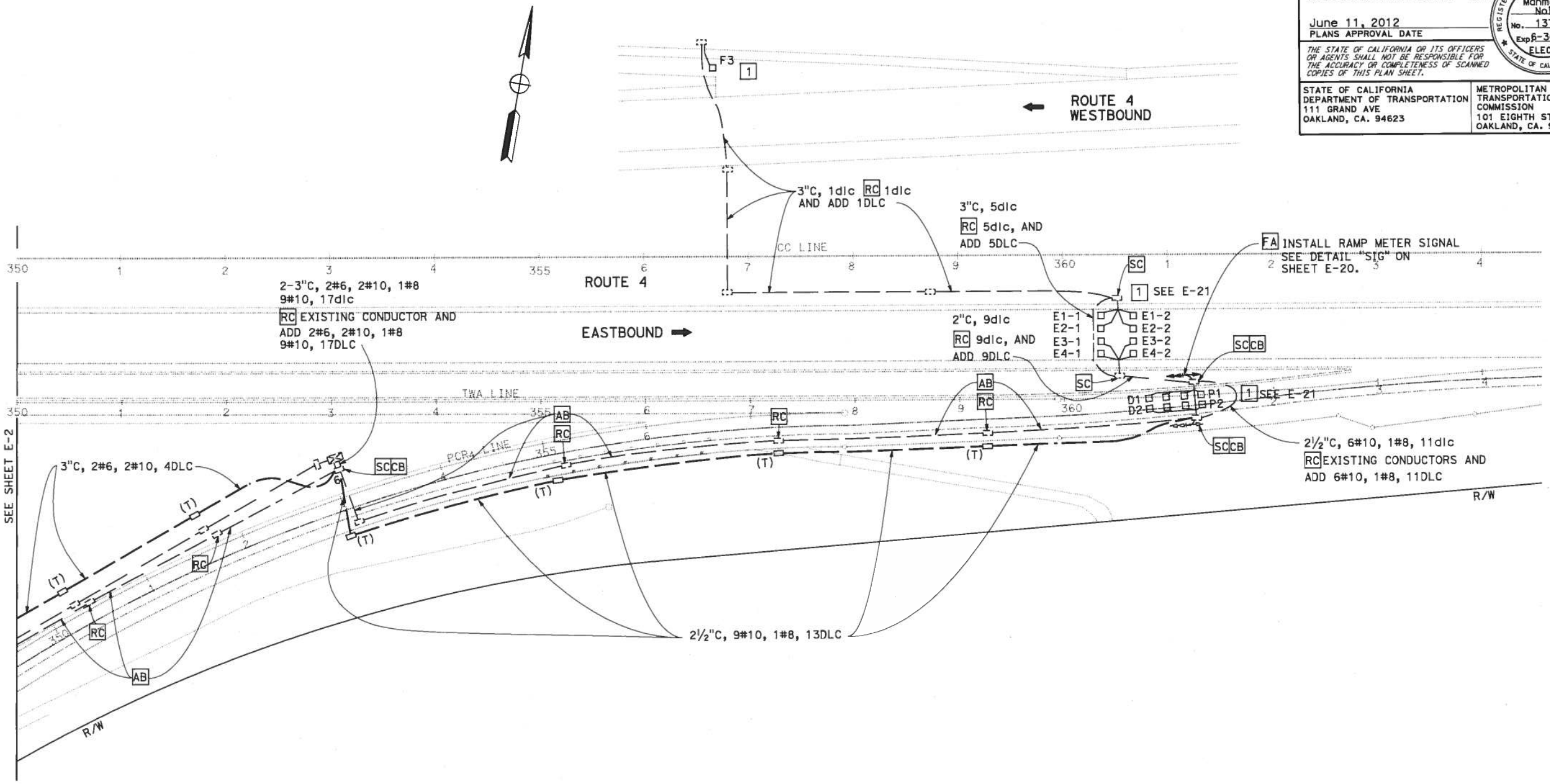

RAMP METERING SYSTEM
(LOCATION 2b, ROUTE 4)

SCALE: 1" = 50'

APPROVED FOR ELECTRICAL WORK ONLY

E-3

STATE OF CALIFORNIA - DEPARTMENT OF TRANSPORTATION	Caltrans ELECTRICAL	FUNCTIONAL SUPERVISOR: MAHMOOD NOII	CALCULATED-DESIGNED BY: PIERRE LASSALLE
CHECKED BY: MAHMOOD NOII	REVISED BY: P.L.	DATE REVISED: 06/07/12	

LAST REVISION 10-05-12 | DATE PLOTTED => 15-OCT-2012 | TIME PLOTTED => 15:20

Dist	COUNTY	ROUTE	POST MILES TOTAL PROJECT	SHEET No.	TOTAL SHEETS
04	CC	4,242	R13.9/23.2, 0.0/3.4	6	40

REGISTERED ELECTRICAL ENGINEER — DATE: 06-07-12

PLANS APPROVAL DATE: June 11, 2012

REGISTERED PROFESSIONAL ENGINEER — Mahmood Noii — No. 13717 — Exp 6-30-13 — ELECT — STATE OF CALIFORNIA

THE STATE OF CALIFORNIA OR ITS OFFICERS OR AGENTS SHALL NOT BE RESPONSIBLE FOR THE ACCURACY OR COMPLETENESS OF SCANNED COPIES OF THIS PLAN SHEET.

STATE OF CALIFORNIA
DEPARTMENT OF TRANSPORTATION
111 GRAND AVE
OAKLAND, CA. 94623

METROPOLITAN
TRANSPORTATION
COMMISSION
101 EIGHTH STREET
OAKLAND, CA. 94607

NOTE:

FOR ACCURATE RIGHT OF WAY DATA, CONTACT
RIGHT OF WAY ENGINEERING AT THE DISTRICT OFFICE.

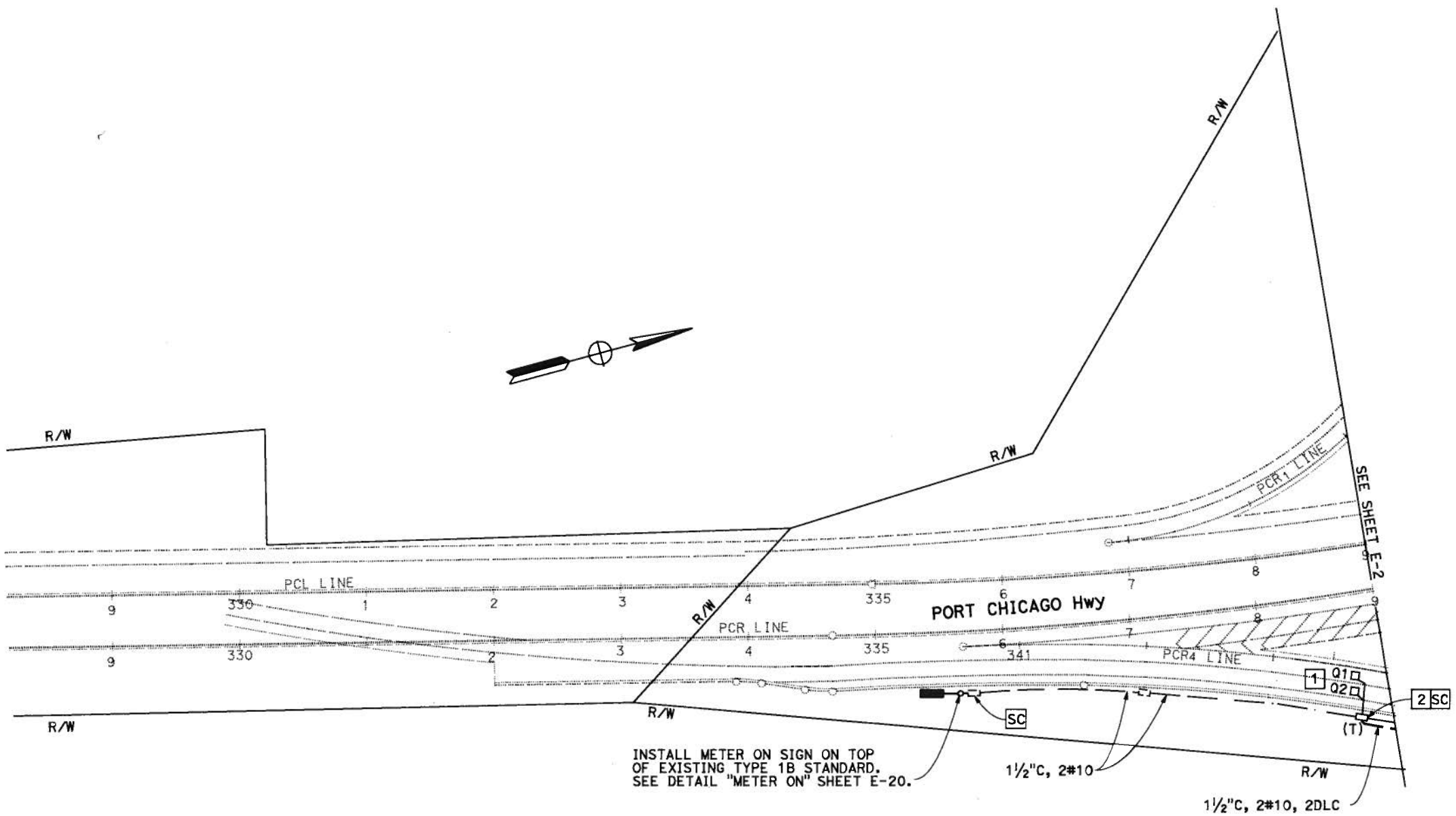

RAMP METERING SYSTEM

SCALE: 1" = 50'

APPROVED FOR ELECTRICAL WORK ONLY

E-4

STATE OF CALIFORNIA - DEPARTMENT OF TRANSPORTATION
Caltrans
ELECTRICAL

FUNCTIONAL SUPERVISOR: MAHMOOD NOII

CALCULATED-DESIGNED BY: PIERRE LASSALLE
CHECKED BY: MAHMOOD NOII

REVISED BY: P.L.
DATE REVISED: 06/07/12

LAST REVISION 07-10-12
DATE PLOTTED => 08-OCT-2012
TIME PLOTTED => 14:52

Dist	COUNTY	ROUTE	POST MILES TOTAL PROJECT	SHEET No.	TOTAL SHEETS
04	CC	4,242	R13.9/23.2, 0.0/3.4	7	40

M Naw 06-07-12
REGISTERED ELECTRICAL ENGINEER DATE

June 11, 2012
PLANS APPROVAL DATE

REGISTERED PROFESSIONAL ENGINEER Mahmood Noii No. 13717 Exp. 6-30-13 ELECT STATE OF CALIFORNIA

THE STATE OF CALIFORNIA OR ITS OFFICERS OR AGENTS SHALL NOT BE RESPONSIBLE FOR THE ACCURACY OR COMPLETENESS OF SCANNED COPIES OF THIS PLAN SHEET.

STATE OF CALIFORNIA
DEPARTMENT OF TRANSPORTATION
111 GRAND AVE
OAKLAND, CA. 94623

METROPOLITAN TRANSPORTATION COMMISSION
101 EIGHTH STREET
OAKLAND, CA. 94607

NOTE:

FOR ACCURATE RIGHT OF WAY DATA, CONTACT RIGHT OF WAY ENGINEERING AT THE DISTRICT OFFICE.

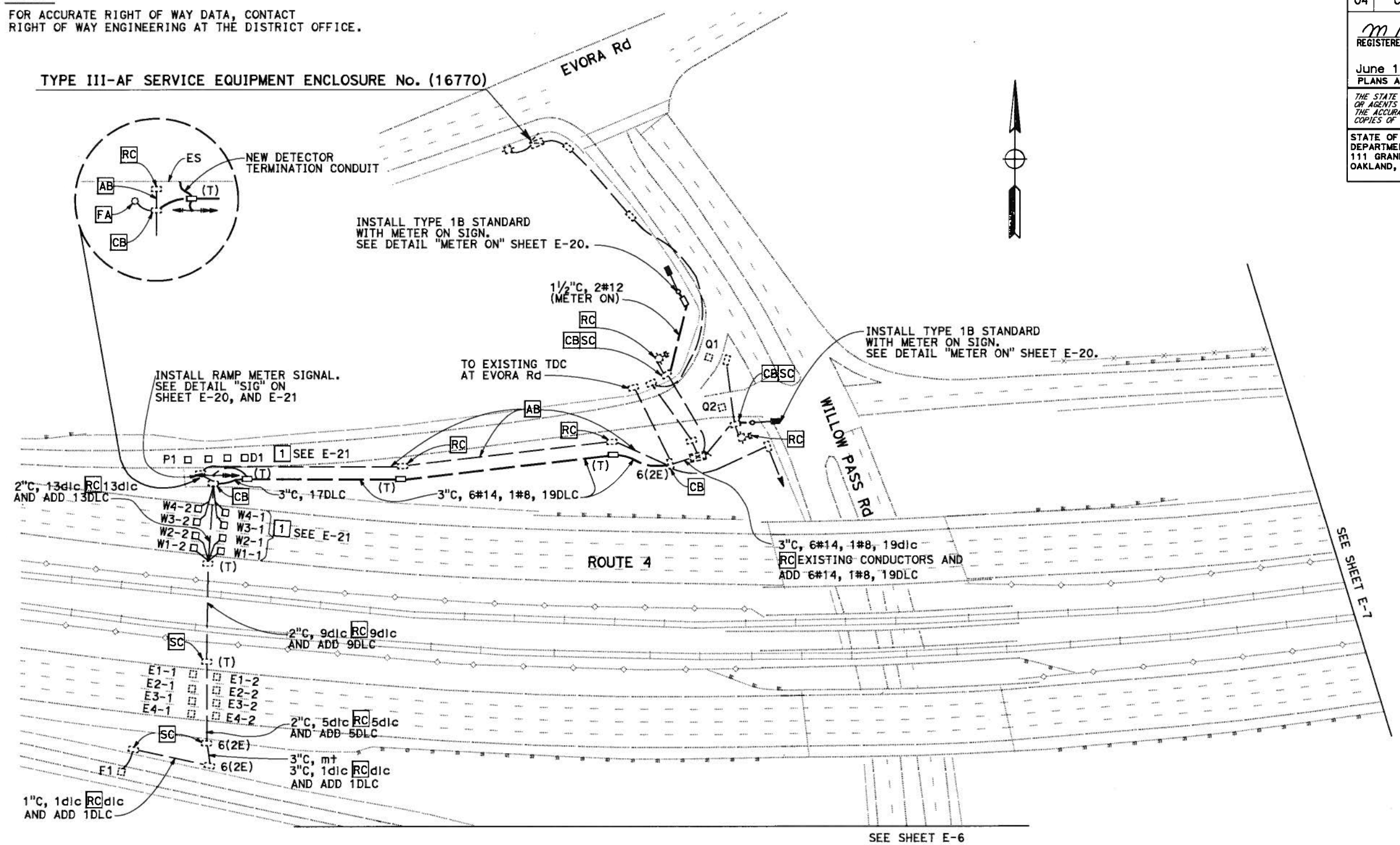

RAMP METERING SYSTEM
(LOCATIONS 3, ROUTE 4)

SCALE: 1" = 50'

APPROVED FOR ELECTRICAL WORK ONLY

E-5

STATE OF CALIFORNIA - DEPARTMENT OF TRANSPORTATION
Caltrans
ELECTRICAL

FUNCTIONAL SUPERVISOR: MAHMOOD NOII
CALCULATED-DESIGNED BY: PIERRE LASSALLE
CHECKED BY: MAHMOOD NOII
REVISED BY: P.L.
DATE REVISED: 06/07/12

LAST REVISION 10-08-12
DATE PLOTTED => 08-OCT-2012
TIME PLOTTED => 07:13

Dist	COUNTY	ROUTE	POST MILES TOTAL PROJECT	SHEET No.	TOTAL SHEETS
04	CC	4,242	R13.9/23.2, 0.0/3.4	8	40

REGISTERED ELECTRICAL ENGINEER — DATE: 06-07-12

PLANS APPROVAL DATE: June 11, 2012

REGISTERED PROFESSIONAL ENGINEER — Mahmood Noii — No. 13717 — Exp 6-30-13 — ELECT — STATE OF CALIFORNIA

THE STATE OF CALIFORNIA OR ITS OFFICERS OR AGENTS SHALL NOT BE RESPONSIBLE FOR THE ACCURACY OR COMPLETENESS OF SCANNED COPIES OF THIS PLAN SHEET.

STATE OF CALIFORNIA
DEPARTMENT OF TRANSPORTATION
111 GRAND AVE
OAKLAND, CA. 94623

METROPOLITAN
TRANSPORTATION
COMMISSION
101 EIGHTH STREET
OAKLAND, CA. 94607

NOTE:

FOR ACCURATE RIGHT OF WAY DATA, CONTACT RIGHT OF WAY ENGINEERING AT THE DISTRICT OFFICE.

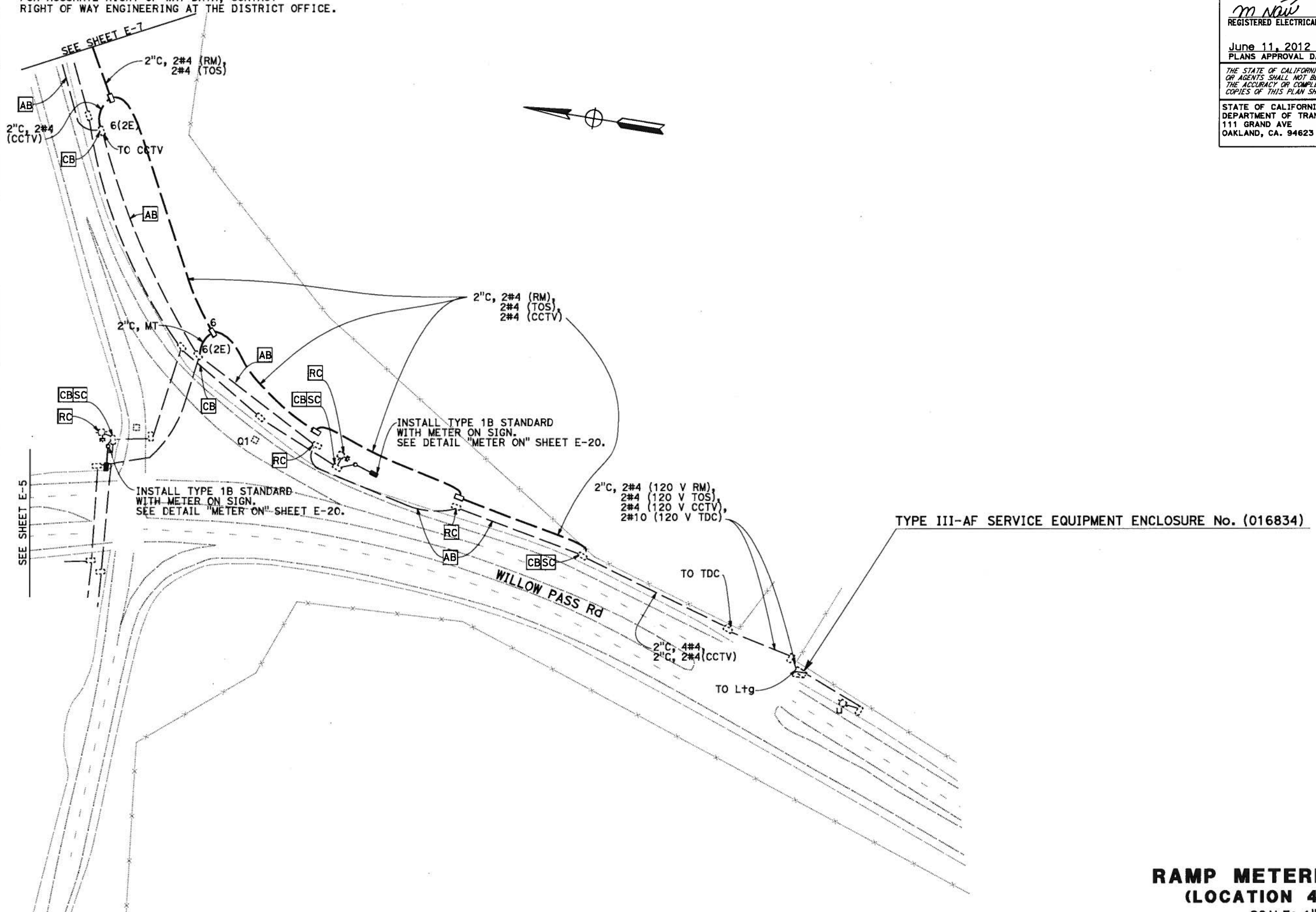

RAMP METERING SYSTEM
(LOCATION 4, ROUTE 4)

SCALE: 1" = 50'

APPROVED FOR ELECTRICAL WORK ONLY

E-6

STATE OF CALIFORNIA - DEPARTMENT OF TRANSPORTATION	FUNCTIONAL SUPERVISOR	CALCULATED-DESIGNED BY	REVISED BY
Caltrans	MAHMOOD NOII	PIERRE LASSALLE	P.L.
ELECTRICAL		MAHMOOD NOII	DATE REVISED 06/07/12
		CHECKED BY	

LAST REVISION 10-08-12 — DATE PLOTTED => 08-OCT-2012 — TIME PLOTTED => 13:33

Dist	COUNTY	ROUTE	POST MILES TOTAL PROJECT	SHEET No.	TOTAL SHEETS
04	CC	4,242	R13.9/23.2, 0.0/3.4	9	40

REGISTERED ELECTRICAL ENGINEER — DATE: 06-07-12

June 11, 2012
PLANS APPROVAL DATE

REGISTERED PROFESSIONAL ENGINEER — Mahmood Noii — No. 13717 — Exp. 6-30-13 — ELECT — STATE OF CALIFORNIA

THE STATE OF CALIFORNIA OR ITS OFFICERS OR AGENTS SHALL NOT BE RESPONSIBLE FOR THE ACCURACY OR COMPLETENESS OF SCANNED COPIES OF THIS PLAN SHEET.

STATE OF CALIFORNIA
DEPARTMENT OF TRANSPORTATION
111 GRAND AVE
OAKLAND, CA. 94623

METROPOLITAN
TRANSPORTATION
COMMISSION
101 EIGHTH STREET
OAKLAND, CA. 94607

NOTE:

FOR ACCURATE RIGHT OF WAY DATA, CONTACT
RIGHT OF WAY ENGINEERING AT THE DISTRICT OFFICE.

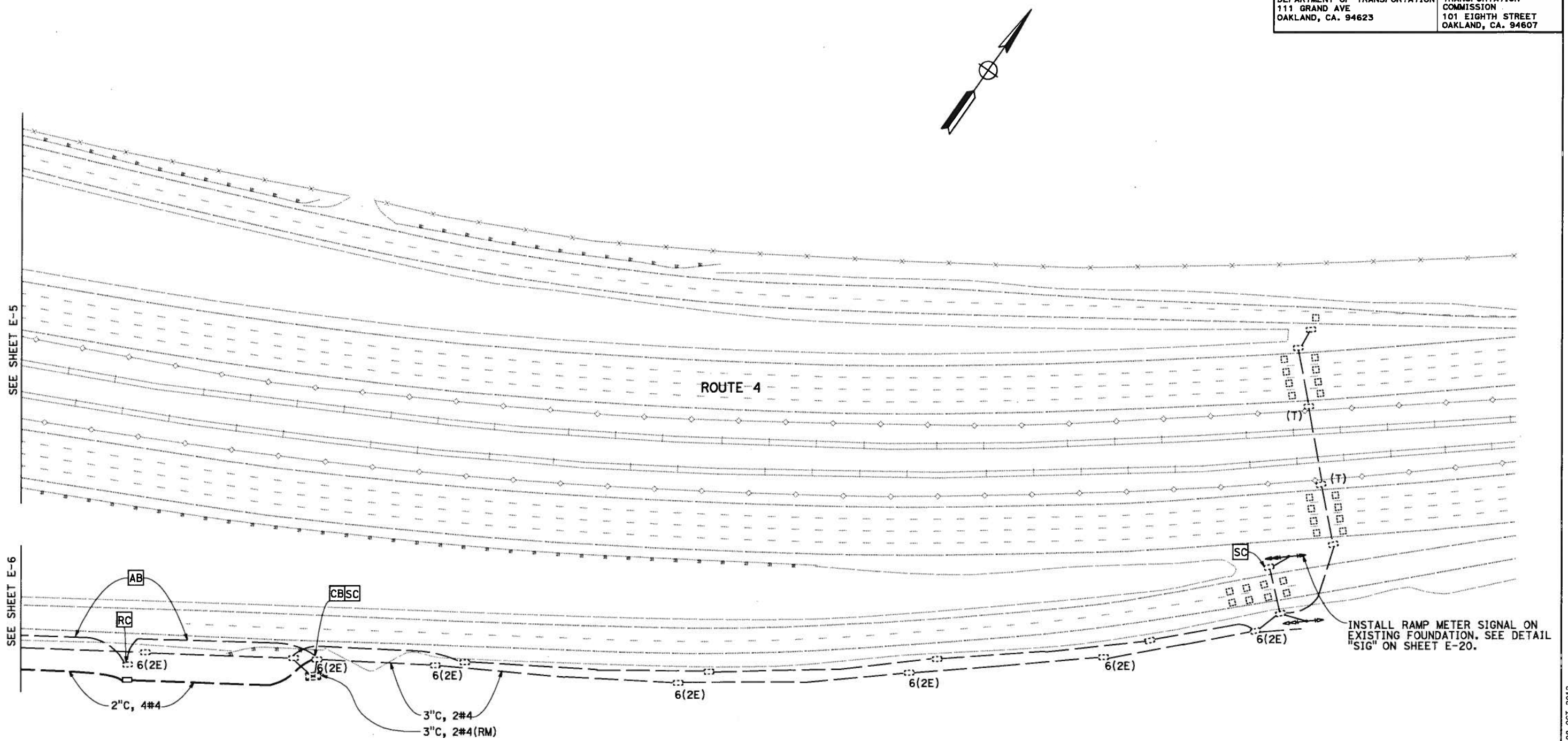

RAMP METERING
(LOCATION 4, ROUTE 4)
SCALE: 1" = 50'

APPROVED FOR ELECTRICAL WORK ONLY

E-7

REVISED BY	P.L.
DATE REVISED	06/07/12
CALCULATED-DESIGNED BY	PIERRE LASSALLE
CHECKED BY	MAHMOOD NOII
FUNCTIONAL SUPERVISOR	MAHMOOD NOII

STATE OF CALIFORNIA - DEPARTMENT OF TRANSPORTATION
Caltrans
ELECTRICAL

LAST REVISION 10-08-12 | DATE PLOTTED => 08-OCT-2012 | TIME PLOTTED => 07:33

NOTE:

FOR ACCURATE RIGHT OF WAY DATA, CONTACT RIGHT OF WAY ENGINEERING AT THE DISTRICT OFFICE.

Dist	COUNTY	ROUTE	POST MILES TOTAL PROJECT	SHEET No.	TOTAL SHEETS
04	CC	4,242	R13.9/23.2, 0.0/3.4	10	40

M Naw 06-07-12
REGISTERED ELECTRICAL ENGINEER DATE

June 11, 2012
PLANS APPROVAL DATE

REGISTERED PROFESSIONAL ENGINEER Mahmood Noii No. 13717 Exp. 6-30-13 ELECT STATE OF CALIFORNIA

THE STATE OF CALIFORNIA OR ITS OFFICERS OR AGENTS SHALL NOT BE RESPONSIBLE FOR THE ACCURACY OR COMPLETENESS OF SCANNED COPIES OF THIS PLAN SHEET.

STATE OF CALIFORNIA
DEPARTMENT OF TRANSPORTATION
111 GRAND AVE
OAKLAND, CA. 94623

METROPOLITAN TRANSPORTATION COMMISSION
101 EIGHTH STREET
OAKLAND, CA. 94607

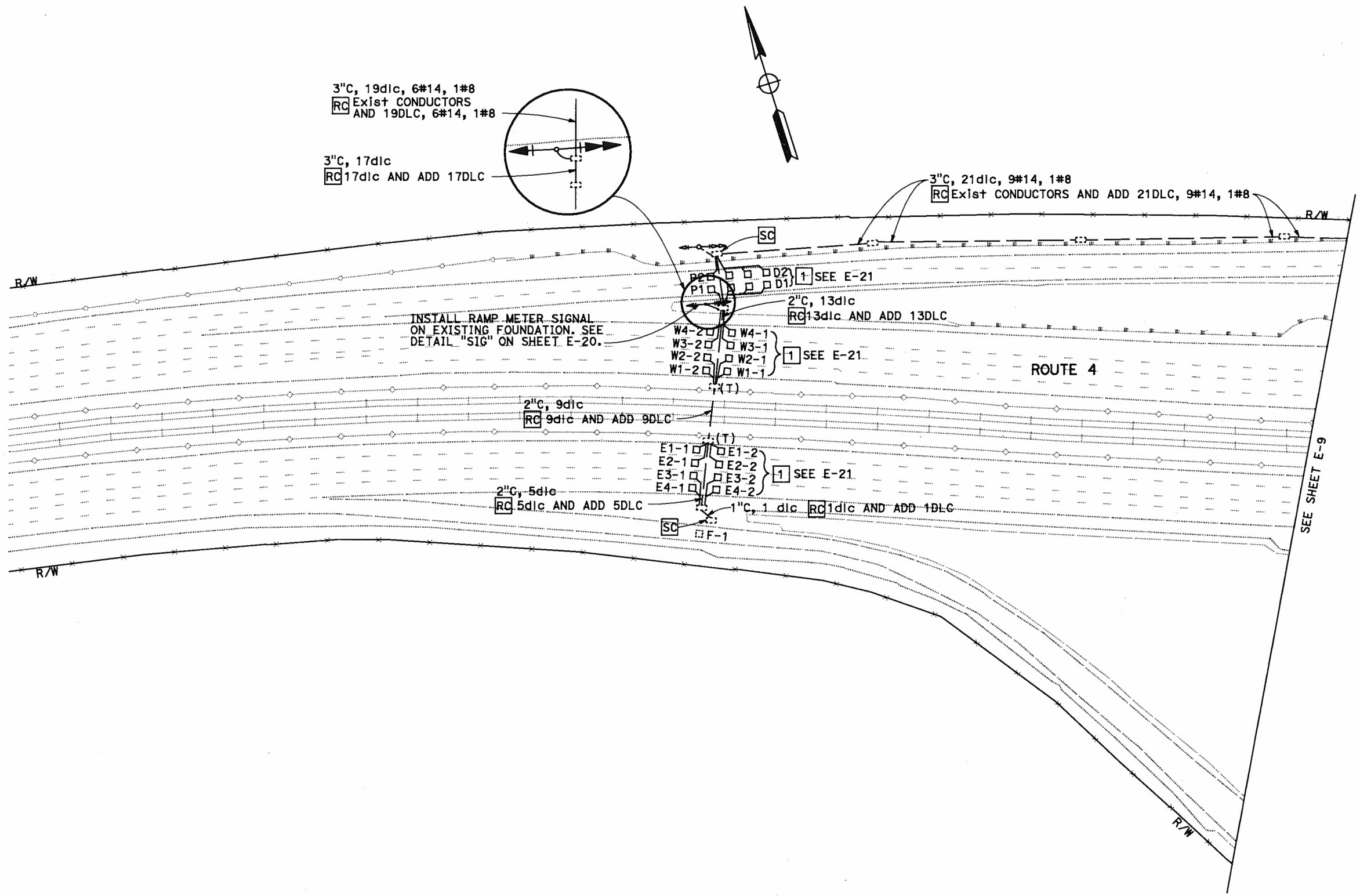

RAMP METERING SYSTEM
(LOCATION 5, ROUTE 4)
SCALE: 1" = 50'

APPROVED FOR ELECTRICAL WORK ONLY

E-8

STATE OF CALIFORNIA - DEPARTMENT OF TRANSPORTATION
Caltrans
ELECTRICAL

FUNCTIONAL SUPERVISOR: MAHMOOD NOII
CALCULATED-DESIGNED BY: PIERRE LASSALLE
CHECKED BY: MAHMOOD NOII
REVISED BY: P.L.
DATE REVISED: 06/07/12

LAST REVISION 10-08-12
DATE PLOTTED => 08-OCT-2012
TIME PLOTTED => 08:11

Dist	COUNTY	ROUTE	POST MILES TOTAL PROJECT	SHEET No.	TOTAL SHEETS
04	CC	4,242	R13.9/23.2, 0.0/3.4	11	40

REGISTERED ELECTRICAL ENGINEER — DATE: 06-07-12

June 11, 2012
PLANS APPROVAL DATE

THE STATE OF CALIFORNIA OR ITS OFFICERS OR AGENTS SHALL NOT BE RESPONSIBLE FOR THE ACCURACY OR COMPLETENESS OF SCANNED COPIES OF THIS PLAN SHEET.

REGISTERED PROFESSIONAL ENGINEER — Mahmood Noii — No. 13717 — Exp. 6-30-13 — ELECT — STATE OF CALIFORNIA

STATE OF CALIFORNIA
DEPARTMENT OF TRANSPORTATION
111 GRAND AVE
OAKLAND, CA. 94623

METROPOLITAN TRANSPORTATION COMMISSION
101 EIGHTH STREET
OAKLAND, CA. 94607

NOTE:
FOR ACCURATE RIGHT OF WAY DATA, CONTACT RIGHT OF WAY ENGINEERING AT THE DISTRICT OFFICE.

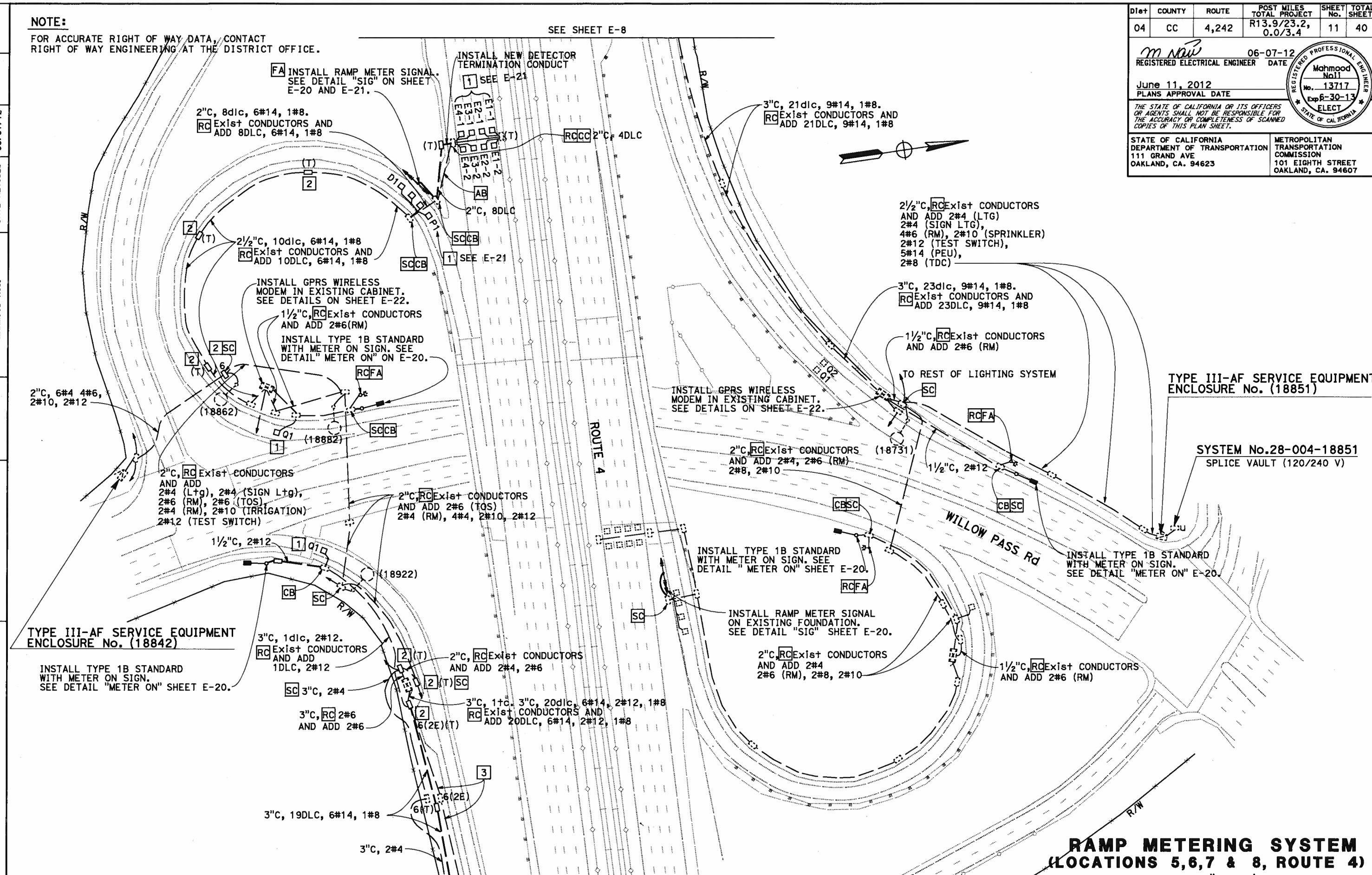

APPROVED FOR ELECTRICAL WORK ONLY

RAMP METERING SYSTEM (LOCATIONS 5,6,7 & 8, ROUTE 4)

SCALE: 1" = 50'

E-9

PIERRE LASSALLE	P.L.
REVISED BY	06/07/12
DATE REVISED	
CALCULATED-DESIGNED BY	MAHMOOD NOII
CHECKED BY	
FUNCTIONAL SUPERVISOR	MAHMOOD NOII

STATE OF CALIFORNIA - DEPARTMENT OF TRANSPORTATION — Caltrans — ELECTRICAL

LAST REVISION 10-08-12 — DATE PLOTTED => 08-OCT-2012 — TIME PLOTTED => 08:49

Dist	COUNTY	ROUTE	POST MILES TOTAL PROJECT	SHEET No.	TOTAL SHEETS
04	CC	4,242	R13.9/23.2, 0.0/3.4	12	40

M Naw 06-07-12
REGISTERED ELECTRICAL ENGINEER DATE

June 11, 2012
PLANS APPROVAL DATE

REGISTERED PROFESSIONAL ENGINEER Mahmood Noii No. 13717 Exp 6-30-13 ELECT STATE OF CALIFORNIA

THE STATE OF CALIFORNIA OR ITS OFFICERS OR AGENTS SHALL NOT BE RESPONSIBLE FOR THE ACCURACY OR COMPLETENESS OF SCANNED COPIES OF THIS PLAN SHEET.

STATE OF CALIFORNIA
DEPARTMENT OF TRANSPORTATION
111 GRAND AVE
OAKLAND, CA. 94623

METROPOLITAN TRANSPORTATION COMMISSION
101 EIGHTH STREET
OAKLAND, CA. 94607

NOTE:
FOR ACCURATE RIGHT OF WAY DATA, CONTACT RIGHT OF WAY ENGINEERING AT THE DISTRICT OFFICE.

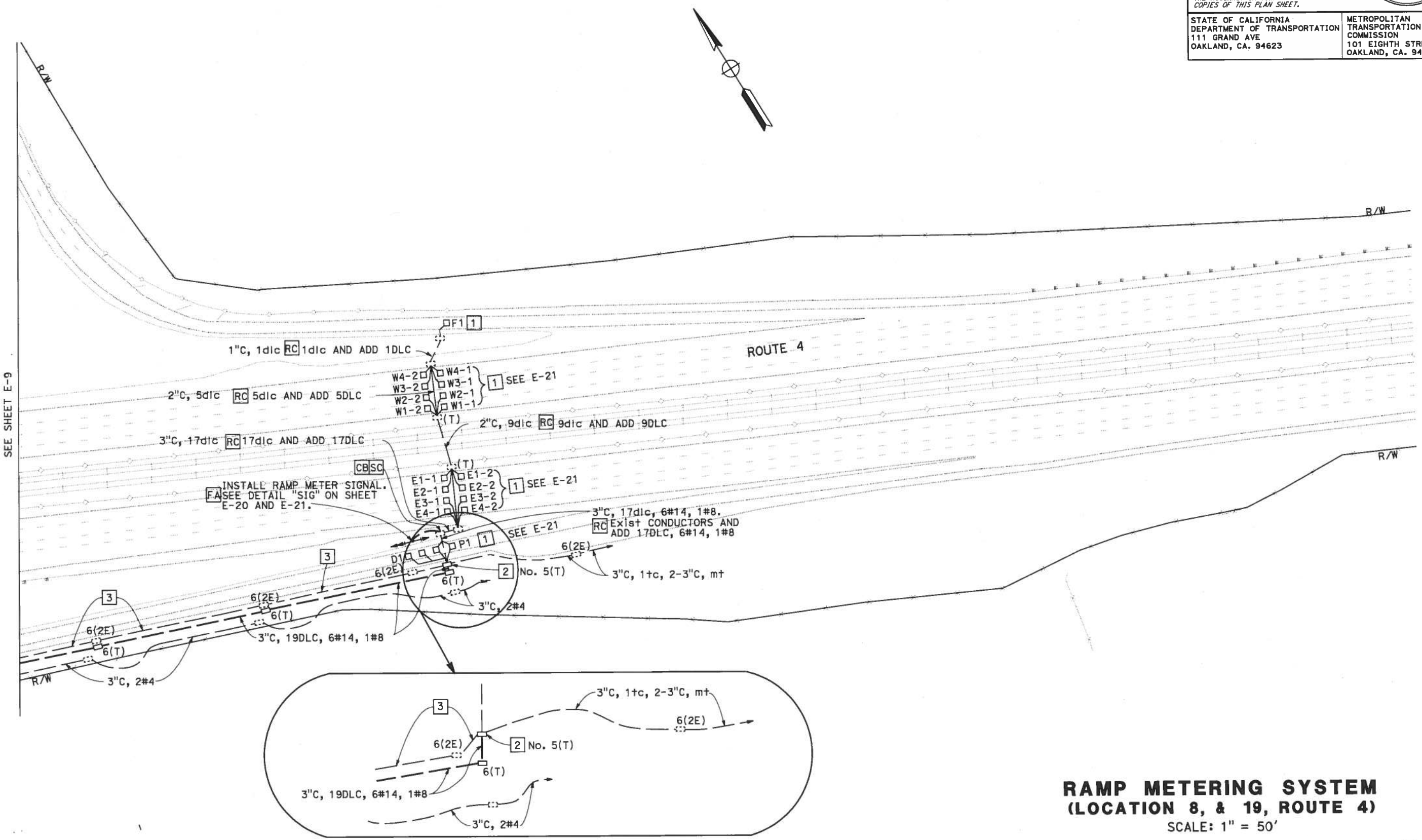

RAMP METERING SYSTEM
(LOCATION 8, & 19, ROUTE 4)
SCALE: 1" = 50'

APPROVED FOR ELECTRICAL WORK ONLY

E-10

STATE OF CALIFORNIA - DEPARTMENT OF TRANSPORTATION
Caltrans ELECTRICAL

FUNCTIONAL SUPERVISOR: MAHMOOD NOII
CALCULATED-DESIGNED BY: PIERRE LASSALLE
CHECKED BY: MAHMOOD NOII
REVISED BY: P.L.
DATE REVISED: 06/07/12

LAST REVISION 10-08-12 DATE PLOTTED => 15-OCT-2012 TIME PLOTTED => 14:56

BORDER LAST REVISED 7/2/2010 USERNAME => s114360 RELATIVE BORDER SCALE 0 1 2 3 UNIT 0213 PROJECT NUMBER & PHASE 04120002691

Dist	COUNTY	ROUTE	POST MILES TOTAL PROJECT	SHEET No.	TOTAL SHEETS
04	CC	4,242	R13.9/23.2, 0.0/3.4	13	40

REGISTERED ELECTRICAL ENGINEER — DATE 06-07-12

June 11, 2012
PLANS APPROVAL DATE

REGISTERED PROFESSIONAL ENGINEER — Mahmood Noii — No. 13717 — Exp. 6-30-13 — ELECT — STATE OF CALIFORNIA

THE STATE OF CALIFORNIA OR ITS OFFICERS OR AGENTS SHALL NOT BE RESPONSIBLE FOR THE ACCURACY OR COMPLETENESS OF SCANNED COPIES OF THIS PLAN SHEET.

STATE OF CALIFORNIA
DEPARTMENT OF TRANSPORTATION
111 GRAND AVE
OAKLAND, CA. 94623

METROPOLITAN
TRANSPORTATION
COMMISSION
101 EIGHTH STREET
OAKLAND, CA. 94607

NOTE:

FOR ACCURATE RIGHT OF WAY DATA, CONTACT
RIGHT OF WAY ENGINEERING AT THE DISTRICT OFFICE.

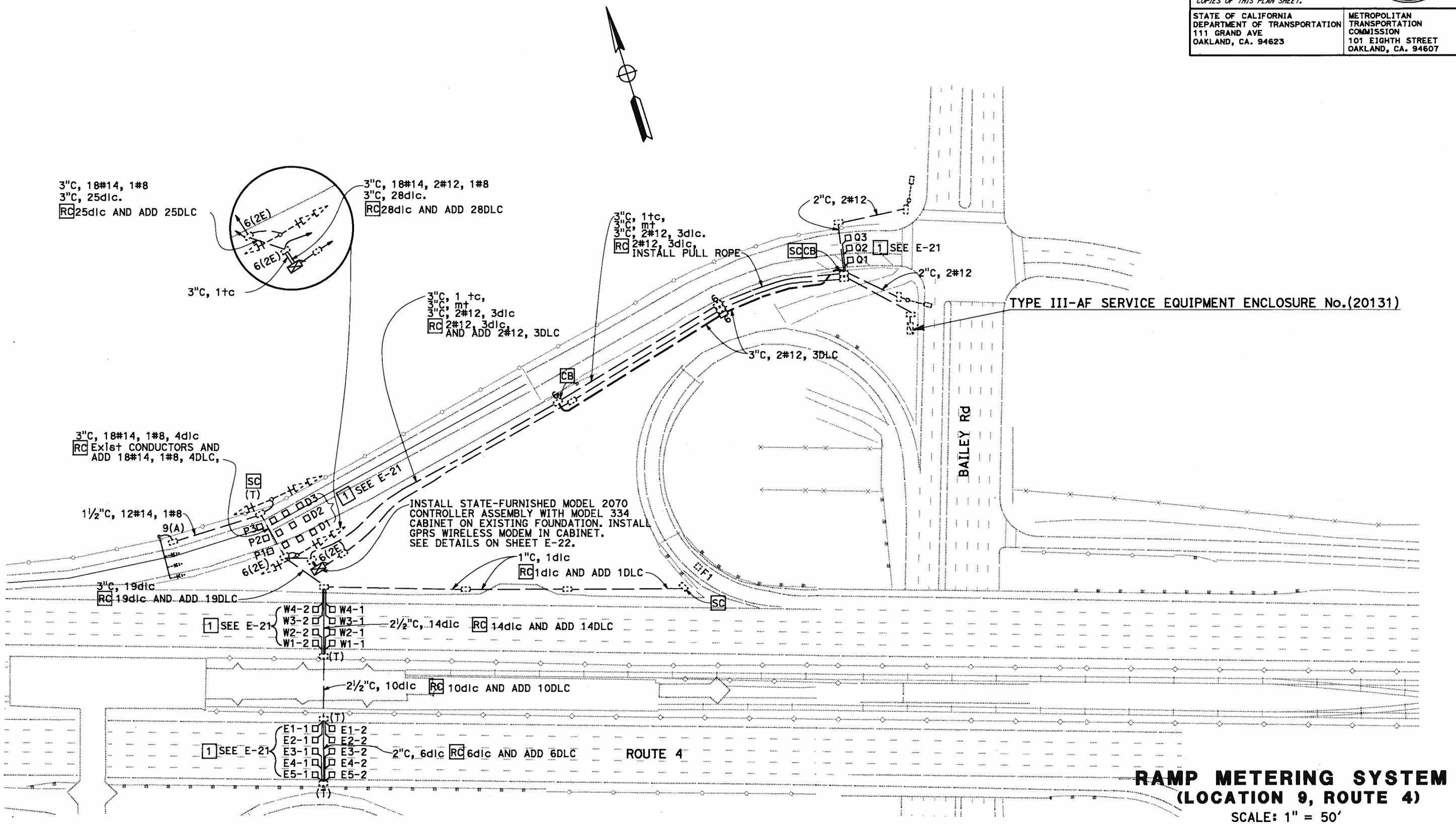

RAMP METERING SYSTEM
(LOCATION 9, ROUTE 4)

SCALE: 1" = 50'

APPROVED FOR ELECTRICAL WORK ONLY

E-11

CALCULATED-DESIGNED BY	PIERRE LASSALLE
CHECKED BY	MAHMOOD NOII
REVISED BY	P.L.
DATE REVISED	06/07/12
FUNCTIONAL SUPERVISOR	MAHMOOD NOII

STATE OF CALIFORNIA - DEPARTMENT OF TRANSPORTATION
Caltrans
ELECTRICAL

LAST REVISION 10-08-12 — DATE PLOTTED => 08-OCT-2012 — TIME PLOTTED => 08:56

Dist	COUNTY	ROUTE	POST MILES TOTAL PROJECT	SHEET No.	TOTAL SHEETS
04	CC	4,242	R13.9/23.2, 0.0/3.4	14	40

REGISTERED ELECTRICAL ENGINEER — DATE: 06-07-12

June 11,2012
PLANS APPROVAL DATE

REGISTERED PROFESSIONAL ENGINEER — Mahmood Noii — No. 13717 — Exp. 6-30-13 — ELECT — STATE OF CALIFORNIA

THE STATE OF CALIFORNIA OR ITS OFFICERS OR AGENTS SHALL NOT BE RESPONSIBLE FOR THE ACCURACY OR COMPLETENESS OF SCANNED COPIES OF THIS PLAN SHEET.

STATE OF CALIFORNIA
DEPARTMENT OF TRANSPORTATION
111 GRAND AVE
OAKLAND, CA. 94623

METROPOLITAN
TRANSPORTATION
COMMISSION
101 EIGHTH STREET
OAKLAND, CA. 94607

NOTE:

FOR ACCURATE RIGHT OF WAY DATA, CONTACT
RIGHT OF WAY ENGINEERING AT THE DISTRICT OFFICE.

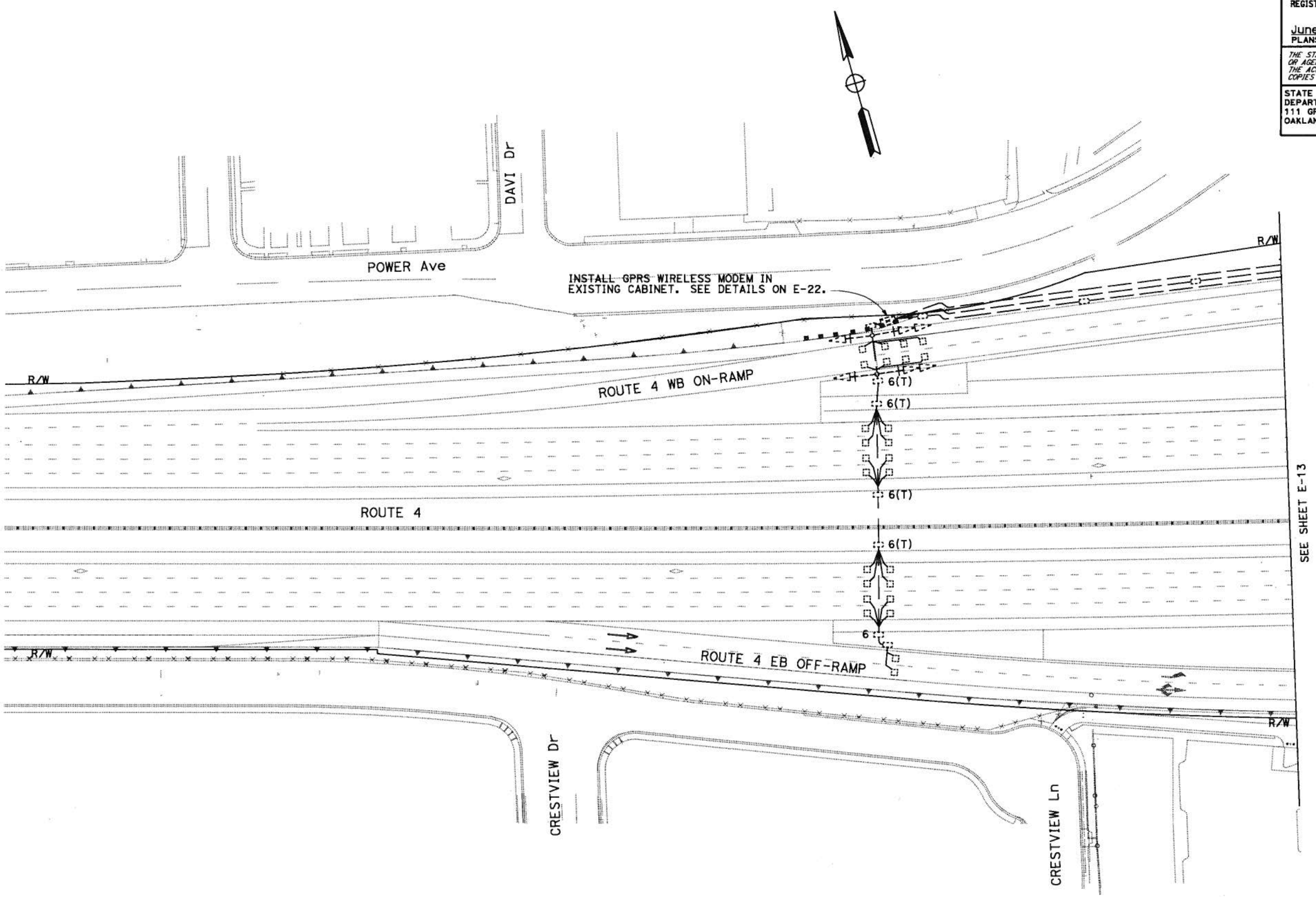

RAMP METERING SYSTEM
(LOCATION 10, ROUTE 4)
SCALE: 1" = 50'

APPROVED FOR ELECTRICAL WORK ONLY

E-12

REVISED BY	P.L.
DATE REVISED	06/07/12
CALCULATED-DESIGNED BY	PIERRE LASSALLE
CHECKED BY	MAHMOOD NOII
FUNCTIONAL SUPERVISOR	MAHMOOD NOII

STATE OF CALIFORNIA - DEPARTMENT OF TRANSPORTATION
Caltrans
ELECTRICAL

LAST REVISION 10-08-12 — DATE PLOTTED => 08-OCT-2012 — TIME PLOTTED => 08:58

Dist	COUNTY	ROUTE	POST MILES TOTAL PROJECT	SHEET No.	TOTAL SHEETS
04	CC	4,242	R13.9/23.2, 0.0/3.4	15	40

REGISTERED ELECTRICAL ENGINEER — DATE 06-07-12

June 11, 2012
PLANS APPROVAL DATE

REGISTERED PROFESSIONAL ENGINEER — Mahmood Noii — No. 13717 — Exp 6-30-13 — ELECT — STATE OF CALIFORNIA

THE STATE OF CALIFORNIA OR ITS OFFICERS OR AGENTS SHALL NOT BE RESPONSIBLE FOR THE ACCURACY OR COMPLETENESS OF SCANNED COPIES OF THIS PLAN SHEET.

STATE OF CALIFORNIA
DEPARTMENT OF TRANSPORTATION
111 GRAND AVE
OAKLAND, CA. 94623

METROPOLITAN
TRANSPORTATION
COMMISSION
101 EIGHTH STREET
OAKLAND, CA. 94607

NOTE:

FOR ACCURATE RIGHT OF WAY DATA, CONTACT
RIGHT OF WAY ENGINEERING AT THE DISTRICT OFFICE.

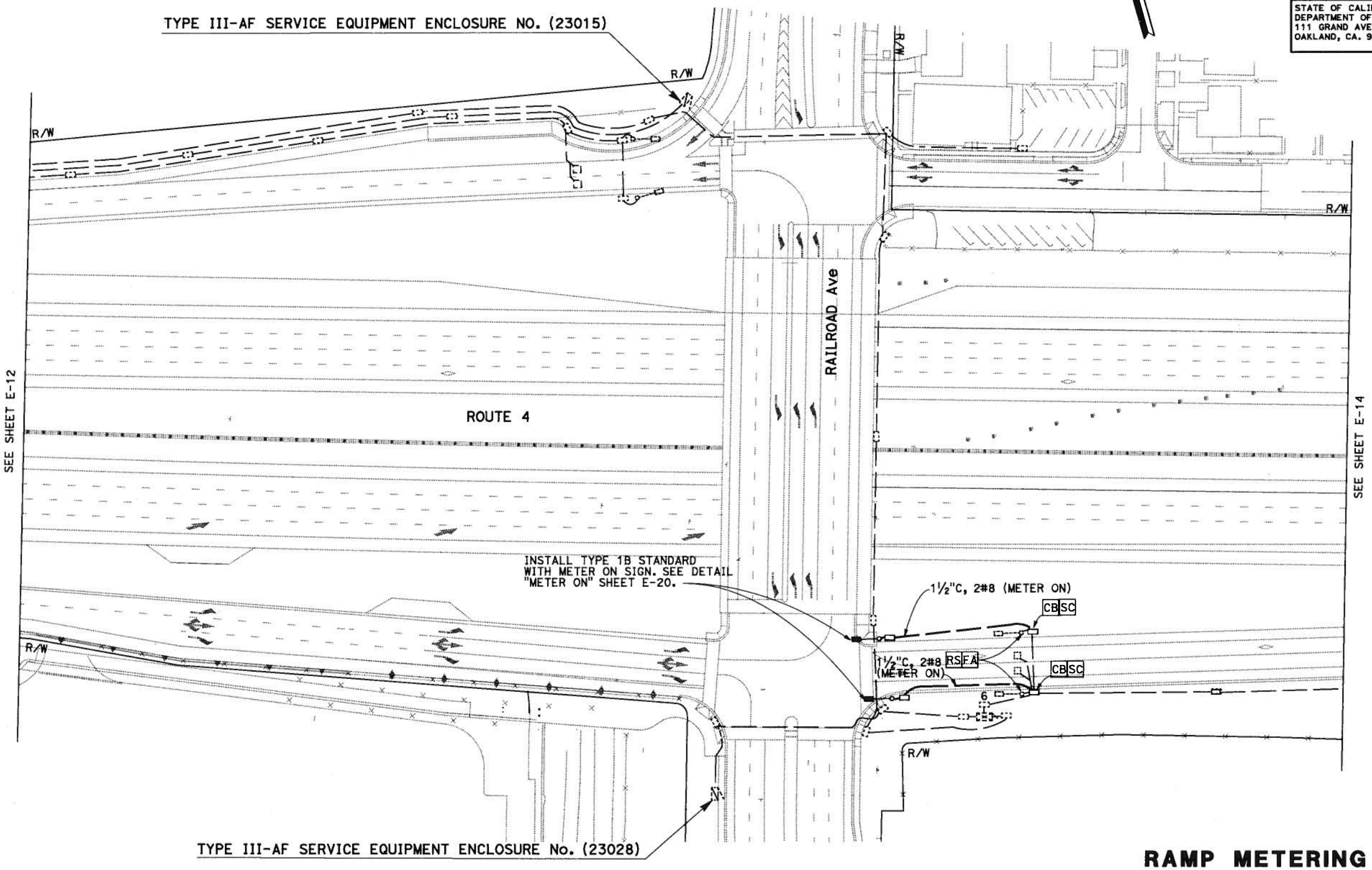

RAMP METERING SYSTEM
(LOCATIONS 10, & 11, ROUTE 4)

SCALE: 1" = 50'

APPROVED FOR ELECTRICAL WORK ONLY

E-13

REVISED BY	P.L.
DATE REVISED	06/07/12
CALCULATED-DESIGNED BY	PIERRE LASSALLE
CHECKED BY	MAHMOOD NOII
FUNCTIONAL SUPERVISOR	MAHMOOD NOII

STATE OF CALIFORNIA - DEPARTMENT OF TRANSPORTATION
Caltrans
ELECTRICAL

LAST REVISION 10-08-12 | DATE PLOTTED => 08-OCT-2012 | TIME PLOTTED => 09:00

Dist	COUNTY	ROUTE	POST MILES TOTAL PROJECT	SHEET No.	TOTAL SHEETS
04	CC	4,242	R13.9/23.2, 0.0/3.4	16	40

REGISTERED ELECTRICAL ENGINEER — DATE: 06-07-12

June 11,2012
PLANS APPROVAL DATE

REGISTERED PROFESSIONAL ENGINEER — Mahmood Noii — No. 13717 — Exp. 6-30-13 — ELECT — STATE OF CALIFORNIA

THE STATE OF CALIFORNIA OR ITS OFFICERS OR AGENTS SHALL NOT BE RESPONSIBLE FOR THE ACCURACY OR COMPLETENESS OF SCANNED COPIES OF THIS PLAN SHEET.

STATE OF CALIFORNIA
DEPARTMENT OF TRANSPORTATION
111 GRAND AVE
OAKLAND, CA. 94623

METROPOLITAN
TRANSPORTATION
COMMISSION
101 EIGHTH STREET
OAKLAND, CA. 94607

NOTE:

FOR ACCURATE RIGHT OF WAY DATA, CONTACT
RIGHT OF WAY ENGINEERING AT THE DISTRICT OFFICE.

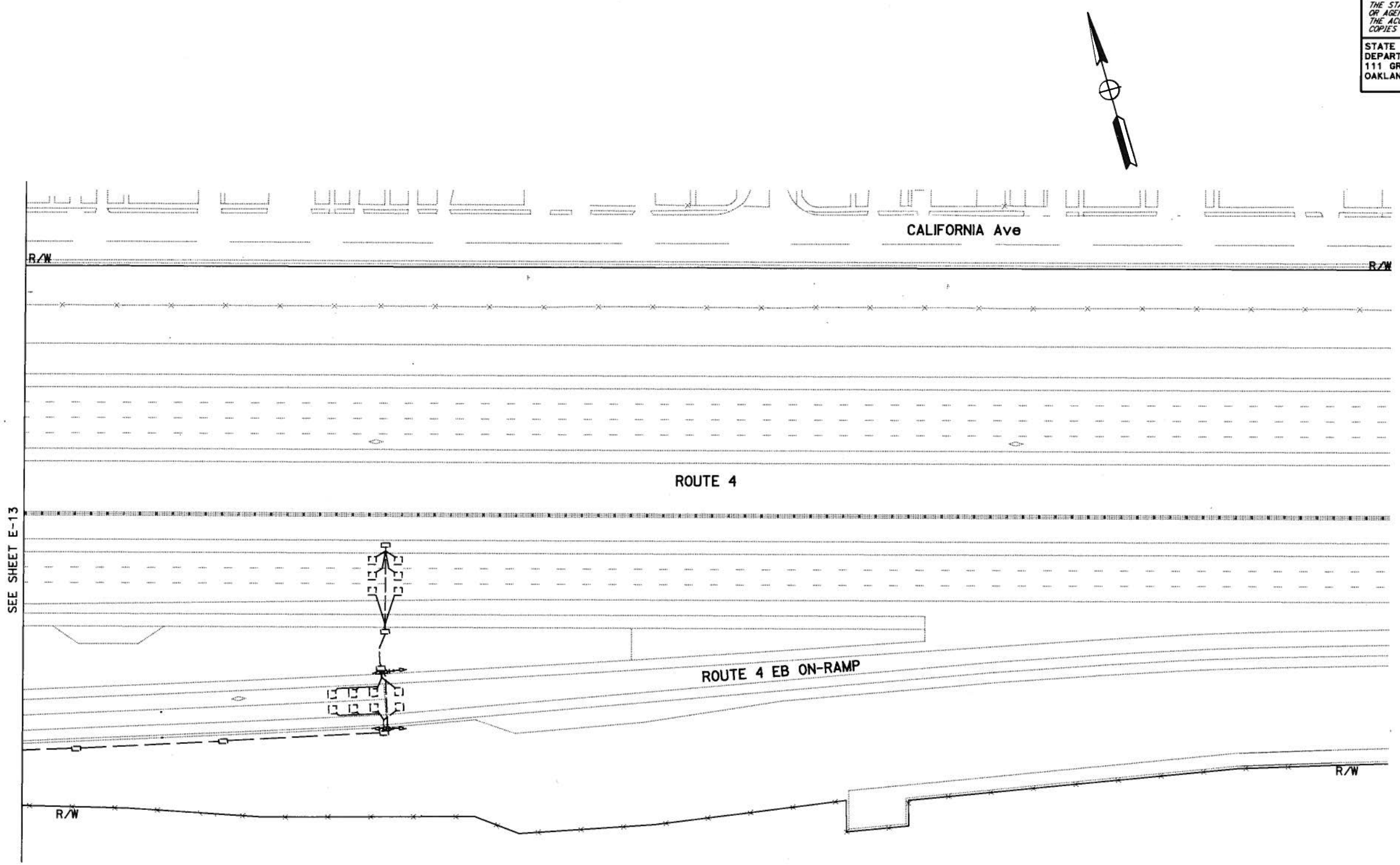

RAMP METERING SYSTEM
(LOCATION 11, ROUTE 4)
SCALE: 1" = 50'

APPROVED FOR ELECTRICAL WORK ONLY

E-14

P.L.	06/07/12
REVISED BY	DATE REVISED
PIERRE LASSALLE	MAHMOOD NOII
CALCULATED-DESIGNED BY	CHECKED BY
FUNCTIONAL SUPERVISOR	MAHMOOD NOII

STATE OF CALIFORNIA - DEPARTMENT OF TRANSPORTATION
Caltrans
ELECTRICAL

LAST REVISION 10-08-12 | DATE PLOTTED => 08-OCT-2012 | TIME PLOTTED => 09:07

Dist	COUNTY	ROUTE	POST MILES TOTAL PROJECT	SHEET No.	TOTAL SHEETS
04	CC	4,242	R13.9/23.2, 0.0/3.4	17	40

REGISTERED ELECTRICAL ENGINEER — DATE: 06-07-12

PLANS APPROVAL DATE: June 11, 2012

REGISTERED PROFESSIONAL ENGINEER — Mahmood Noii — No. 13717 — Exp. 6-30-13 — ELECT — STATE OF CALIFORNIA

THE STATE OF CALIFORNIA OR ITS OFFICERS OR AGENTS SHALL NOT BE RESPONSIBLE FOR THE ACCURACY OR COMPLETENESS OF SCANNED COPIES OF THIS PLAN SHEET.

STATE OF CALIFORNIA
DEPARTMENT OF TRANSPORTATION
111 GRAND AVE
OAKLAND, CA. 94623

METROPOLITAN
TRANSPORTATION
COMMISSION
101 EIGHTH STREET
OAKLAND, CA. 94607

NOTE:

FOR ACCURATE RIGHT OF WAY DATA, CONTACT RIGHT OF WAY ENGINEERING AT THE DISTRICT OFFICE.

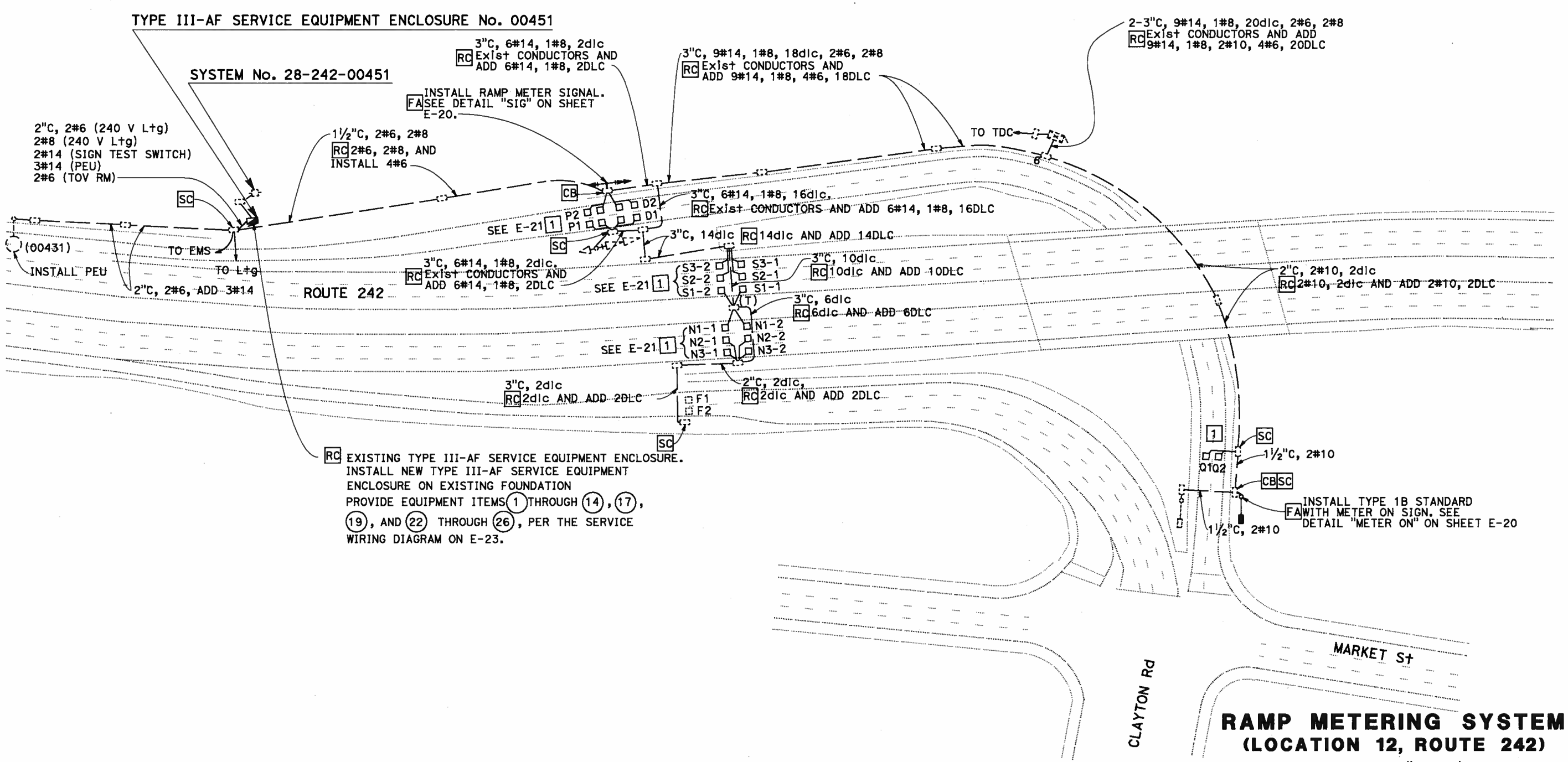

RC EXISTING TYPE III-AF SERVICE EQUIPMENT ENCLOSURE. INSTALL NEW TYPE III-AF SERVICE EQUIPMENT ENCLOSURE ON EXISTING FOUNDATION PROVIDE EQUIPMENT ITEMS (1) THROUGH (14), (17), (19), AND (22) THROUGH (26), PER THE SERVICE WIRING DIAGRAM ON E-23.

RAMP METERING SYSTEM
(LOCATION 12, ROUTE 242)

SCALE: 1" = 50'

APPROVED FOR ELECTRICAL WORK ONLY

E-15

REVISED BY	DATE REVISED
P.L.	06/07/12

CALCULATED-DESIGNED BY: PIERRE LASSALLE
CHECKED BY: MAHMOOD NOII
FUNCTIONAL SUPERVISOR: MAHMOOD NOII

STATE OF CALIFORNIA - DEPARTMENT OF TRANSPORTATION
Caltrans
ELECTRICAL

LAST REVISION 10-08-12
DATE PLOTTED => 08-OCT-2012
TIME PLOTTED => 09:26

Dist	COUNTY	ROUTE	POST MILES TOTAL PROJECT	SHEET No.	TOTAL SHEETS
04	CC	4,242	R13.9/23.2, 0.0/3.4	18	40

REGISTERED ELECTRICAL ENGINEER 06-07-12 DATE

June 11,2012
PLANS APPROVAL DATE

REGISTERED PROFESSIONAL ENGINEER Mahmood Noii No. 13717 Exp. 6-30-13 ELECT STATE OF CALIFORNIA

THE STATE OF CALIFORNIA OR ITS OFFICERS OR AGENTS SHALL NOT BE RESPONSIBLE FOR THE ACCURACY OR COMPLETENESS OF SCANNED COPIES OF THIS PLAN SHEET.

STATE OF CALIFORNIA
DEPARTMENT OF TRANSPORTATION
111 GRAND AVE
OAKLAND, CA. 94623

METROPOLITAN TRANSPORTATION COMMISSION
101 EIGHTH STREET
OAKLAND, CA. 94607

NOTE:
FOR ACCURATE RIGHT OF WAY DATA, CONTACT RIGHT OF WAY ENGINEERING AT THE DISTRICT OFFICE.

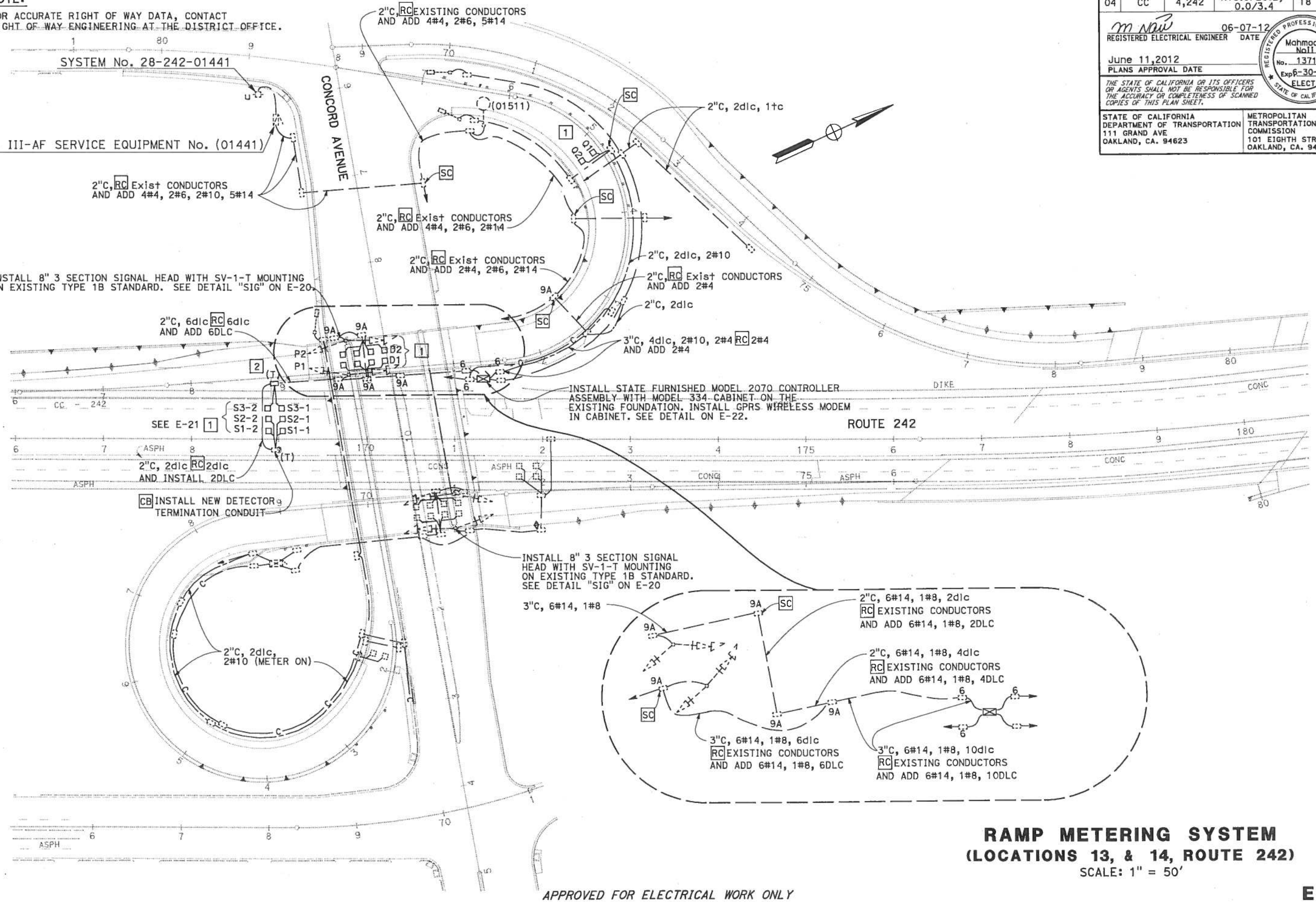

RAMP METERING SYSTEM
(LOCATIONS 13, & 14, ROUTE 242)
SCALE: 1" = 50'

APPROVED FOR ELECTRICAL WORK ONLY

E-16

STATE OF CALIFORNIA - DEPARTMENT OF TRANSPORTATION
Caltrans
ELECTRICAL

FUNCTIONAL SUPERVISOR: MAHMOOD NOII
CALCULATED-DESIGNED BY: PIERRE LASSALLE
CHECKED BY: MAHMOOD NOII
REVISED BY: P.L.
DATE REVISED: 06/07/12

LAST REVISION 10-16-12
DATE PLOTTED => 16-OCT-2012
TIME PLOTTED => 09:52

BORDER LAST REVISED 7/2/2010 | USERNAME => s114360 | RELATIVE BORDER SCALE 0 1 2 3 | UNIT 0213 | PROJECT NUMBER & PHASE 04120002691

Dist	COUNTY	ROUTE	POST MILES TOTAL PROJECT	SHEET No.	TOTAL SHEETS
04	CC	4,242	R13.9/23.2, 0.0/3.4	19	40

M Naw 06-07-12
REGISTERED ELECTRICAL ENGINEER DATE

June 11, 2012
PLANS APPROVAL DATE

REGISTERED PROFESSIONAL ENGINEER Mahmood Noii No. 13717 Exp. 6-30-13 ELECT STATE OF CALIFORNIA

THE STATE OF CALIFORNIA OR ITS OFFICERS OR AGENTS SHALL NOT BE RESPONSIBLE FOR THE ACCURACY OR COMPLETENESS OF SCANNED COPIES OF THIS PLAN SHEET.

STATE OF CALIFORNIA
DEPARTMENT OF TRANSPORTATION
111 GRAND AVE
OAKLAND, CA. 94623

METROPOLITAN TRANSPORTATION COMMISSION
101 EIGHTH STREET
OAKLAND, CA. 94607

NOTE:

FOR ACCURATE RIGHT OF WAY DATA, CONTACT RIGHT OF WAY ENGINEERING AT THE DISTRICT OFFICE.

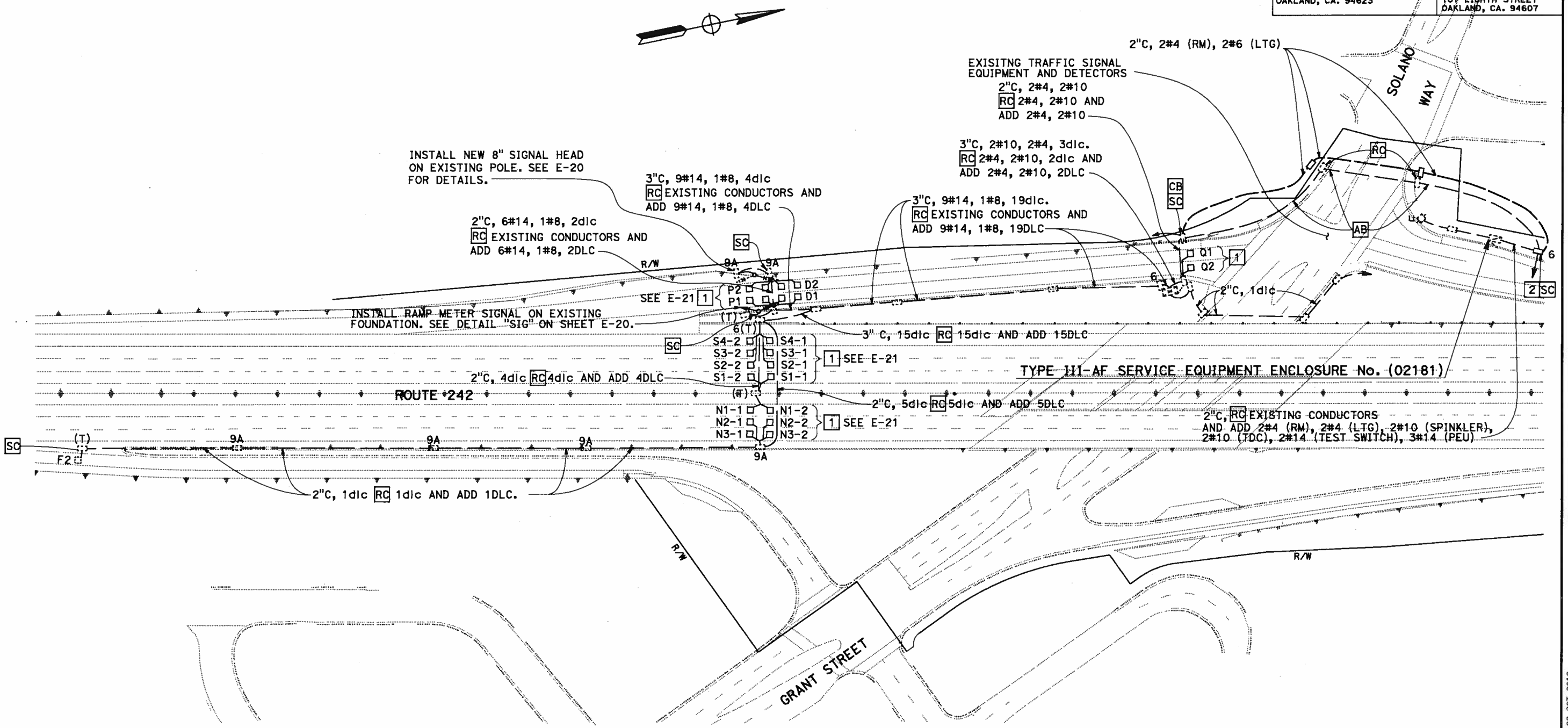

RAMP METERING SYSTEM
(LOCATION 15, ROUTE 242)

SCALE: 1" = 50'

APPROVED FOR ELECTRICAL WORK ONLY

E-17

STATE OF CALIFORNIA - DEPARTMENT OF TRANSPORTATION
Caltrans ELECTRICAL

FUNCTIONAL SUPERVISOR: MAHMOOD NOII
CALCULATED-DESIGNED BY: PIERRE LASSALLE
CHECKED BY: MAHMOOD NOII
REVISED BY: P.L.
DATE REVISED: 06/07/12

LAST REVISION 10-08-12
DATE PLOTTED => 08-OCT-2012
TIME PLOTTED => 13:30

BORDER LAST REVISED 7/2/2010
USERNAME => s114360
DGN FILE => 0412000629ua017.dgn
RELATIVE BORDER SCALE IS IN INCHES 0 1 2 3
UNIT 0213
PROJECT NUMBER & PHASE 04120002691

Dist	COUNTY	ROUTE	POST MILES TOTAL PROJECT	SHEET No.	TOTAL SHEETS
04	CC	4,242	R13.9/23.2, 0.0/3.4	20	40

M Naw 06-07-12
REGISTERED ELECTRICAL ENGINEER DATE

June 11, 2012
PLANS APPROVAL DATE

REGISTERED PROFESSIONAL ENGINEER Mahmood Noii No. 13717 Exp 6-30-13 ELECT STATE OF CALIFORNIA

THE STATE OF CALIFORNIA OR ITS OFFICERS OR AGENTS SHALL NOT BE RESPONSIBLE FOR THE ACCURACY OR COMPLETENESS OF SCANNED COPIES OF THIS PLAN SHEET.

STATE OF CALIFORNIA
DEPARTMENT OF TRANSPORTATION
111 GRAND AVE
OAKLAND, CA. 94623

METROPOLITAN
TRANSPORTATION
COMMISSION
101 EIGHTH STREET
OAKLAND, CA. 94607

NOTE:

FOR ACCURATE RIGHT OF WAY DATA, CONTACT RIGHT OF WAY ENGINEERING AT THE DISTRICT OFFICE.

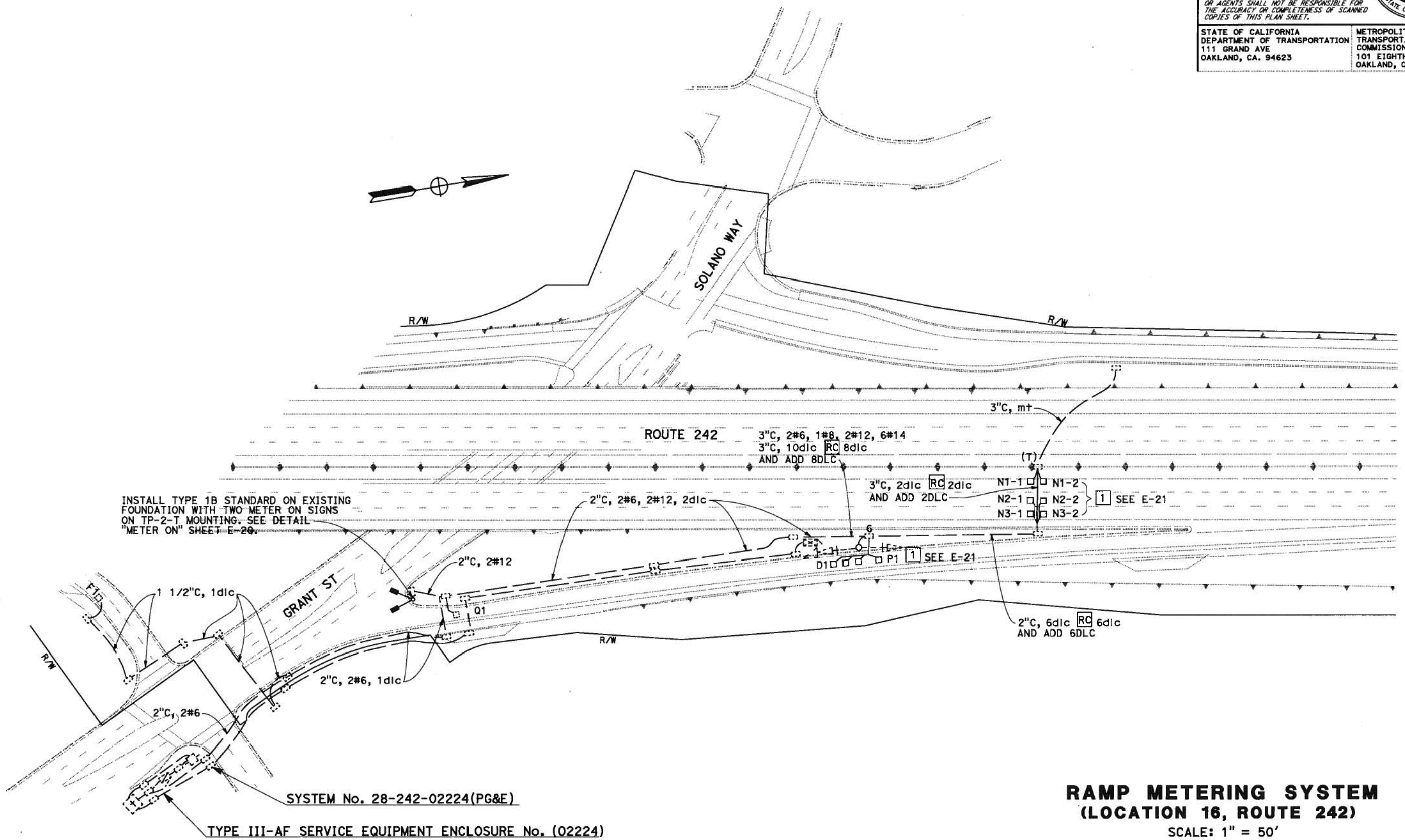

RAMP METERING SYSTEM
(LOCATION 16, ROUTE 242)

SCALE: 1" = 50'

APPROVED FOR ELECTRICAL WORK ONLY

E-18

STATE OF CALIFORNIA - DEPARTMENT OF TRANSPORTATION
Caltrans ELECTRICAL

FUNCTIONAL SUPERVISOR: MAHMOOD NOII
CALCULATED-DESIGNED BY: PIERRE LASSALLE
CHECKED BY: MAHMOOD NOII
REVISED BY: P.L.
DATE REVISED: 06/07/12

LAST REVISION 10-08-12
DATE PLOTTED => 08-OCT-2012
TIME PLOTTED => 14:11

NOTE:
FOR ACCURATE RIGHT OF WAY DATA, CONTACT RIGHT OF WAY ENGINEERING AT THE DISTRICT OFFICE.

Dist	COUNTY	ROUTE	POST MILES TOTAL PROJECT	SHEET No.	TOTAL SHEETS
04	CC	4,242	R13.9/23.2, 0.0/3.4	21	40

M Naw 06-07-12
REGISTERED ELECTRICAL ENGINEER DATE

June 11, 2012
PLANS APPROVAL DATE

REGISTERED PROFESSIONAL ENGINEER Mahmood Noii No. 13717 Exp. 6-30-13 ELECT STATE OF CALIFORNIA

THE STATE OF CALIFORNIA OR ITS OFFICERS OR AGENTS SHALL NOT BE RESPONSIBLE FOR THE ACCURACY OR COMPLETENESS OF SCANNED COPIES OF THIS PLAN SHEET.

STATE OF CALIFORNIA
DEPARTMENT OF TRANSPORTATION
111 GRAND AVE
OAKLAND, CA. 94623

METROPOLITAN TRANSPORTATION COMMISSION
101 EIGHTH STREET
OAKLAND, CA. 94607

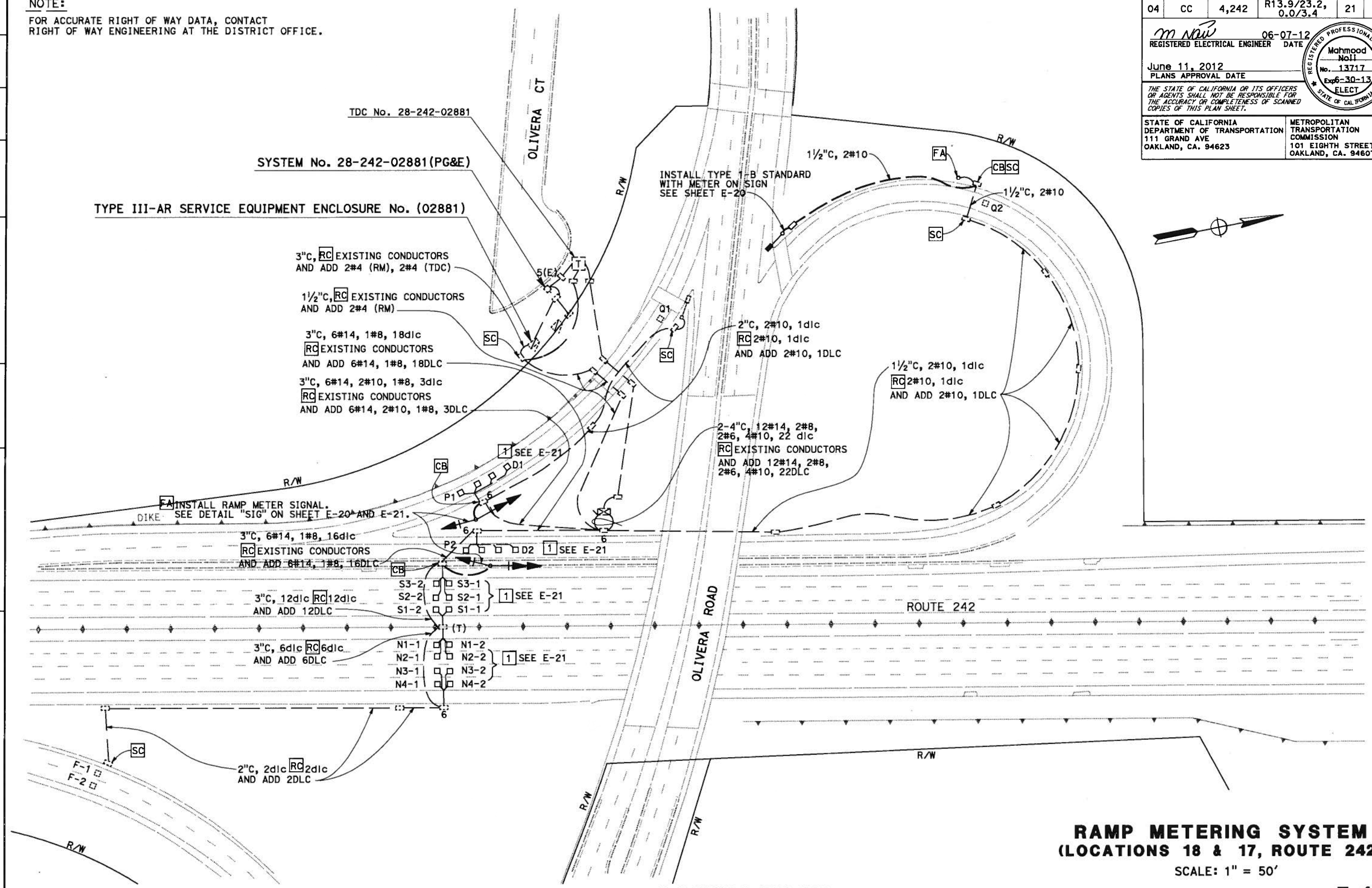

RAMP METERING SYSTEM
(LOCATIONS 18 & 17, ROUTE 242)

SCALE: 1" = 50'

APPROVED FOR ELECTRICAL WORK ONLY

E-19

STATE OF CALIFORNIA - DEPARTMENT OF TRANSPORTATION
Caltrans
ELECTRICAL

FUNCTIONAL SUPERVISOR: MAHMOOD NOII
CALCULATED-DESIGNED BY: PIERRE LASSALLE
CHECKED BY: MAHMOOD NOII
REVISED BY: P.L.
DATE REVISED: 06/07/12

LAST REVISION 10-08-12
DATE PLOTTED => 08-OCT-2012
TIME PLOTTED => 14:42

Dist	COUNTY	ROUTE	POST MILES TOTAL PROJECT	SHEET No.	TOTAL SHEETS
04	CC	4,242	R13.9/23.2, 0.0/3.4	22	40

REGISTERED ELECTRICAL ENGINEER 06-08-12 DATE

June 11, 2012
PLANS APPROVAL DATE

REGISTERED PROFESSIONAL ENGINEER Ray C. Duschane No. 14758 Exp. 6-30-13 ELECT STATE OF CALIFORNIA

THE STATE OF CALIFORNIA OR ITS OFFICERS OR AGENTS SHALL NOT BE RESPONSIBLE FOR THE ACCURACY OR COMPLETENESS OF SCANNED COPIES OF THIS PLAN SHEET.

STATE OF CALIFORNIA
DEPARTMENT OF TRANSPORTATION
111 GRAND AVE
OAKLAND, CA. 94623

METROPOLITAN TRANSPORTATION COMMISSION
101 EIGHTH STREET
OAKLAND, CA. 94607

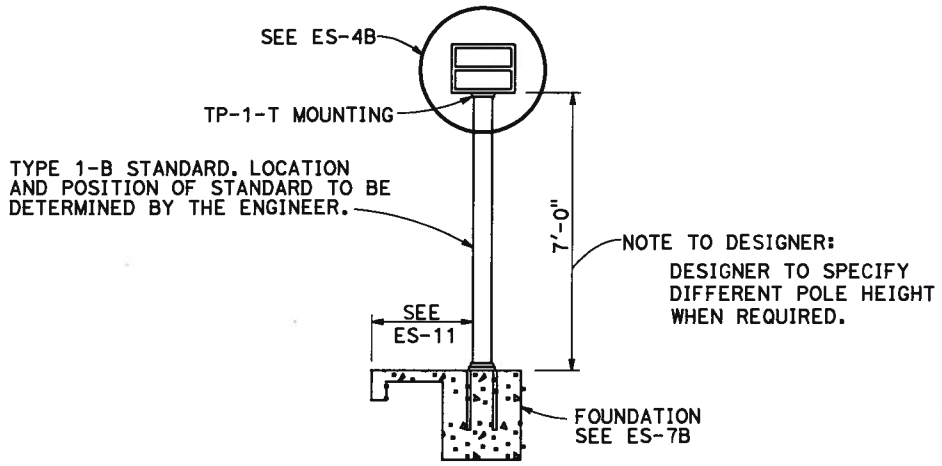

METER ON SIGN DETAIL

SIGNAL CONDUCTORS FOR RAMP METERS SHALL BE COLOR CODED AS FOLLOWS:

PHASE	BASE	STRIPE	BAND SYMBOLS
1	RE, YE, BRN	NONE	1
2	RE, YE, BRN	BLACK	2
3	RE, YE, BRN	PURPLE	3
4	RE, YE, BRN	ORANGE	4

DETAIL "CONDUCTOR COLOR CODING"

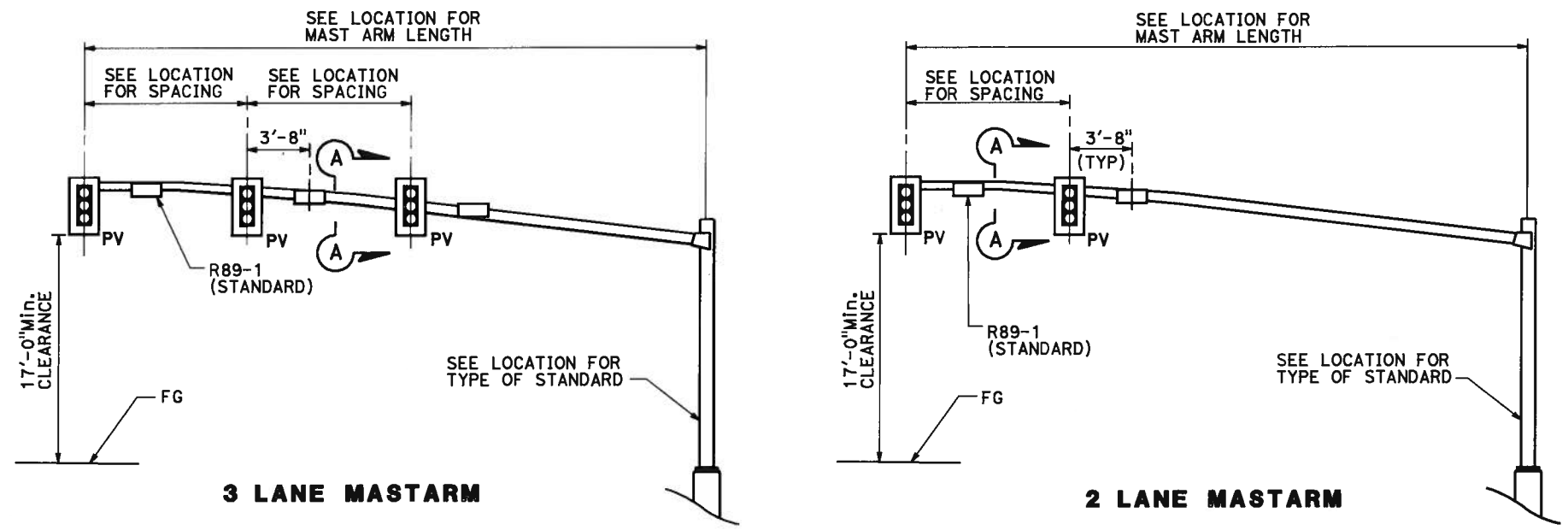

3 LANE MASTARM **2 LANE MASTARM**

DETAIL "MA"
RAMP METER SIGNAL, MAST ARM MOUNTED

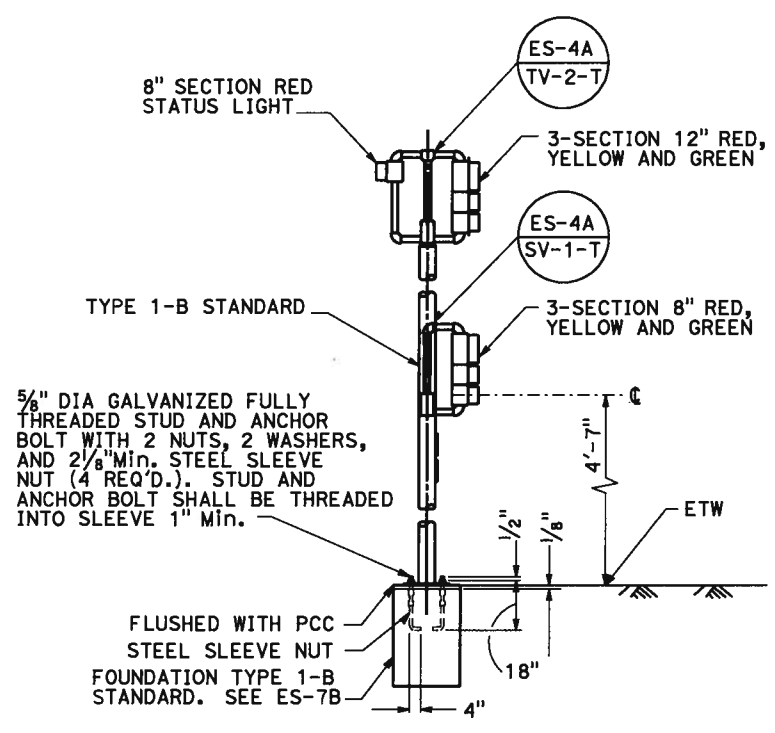

DETAIL "SIG"
RAMP METER SIGNAL, POLE MOUNTED

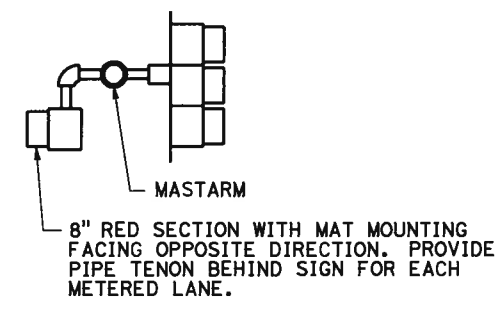

SECTION A-A

ELECTRICAL DETAILS
("METER-ON" SIGN RAMP METERING 1-B STANDARD, 2-LANE MASTARM, 3-LANE MASTARM, CONDUCTOR COLOR CODING)

NO SCALE

APPROVED FOR ELECTRICAL WORK ONLY

E-20

STATE OF CALIFORNIA - DEPARTMENT OF TRANSPORTATION
Caltrans
ELECTRICAL
FUNCTIONAL SUPERVISOR: CHARLES PRICE
CALCULATED-DESIGNED BY: RAY DUSCHANE
CHECKED BY: RAY DUSCHANE
REVISED BY: R.D.
DATE REVISED: 06/08/12

LAST REVISION 10-08-12
DATE PLOTTED => 08-OCT-2012
TIME PLOTTED => 14:43

Dist	COUNTY	ROUTE	POST MILES TOTAL PROJECT	SHEET No.	TOTAL SHEETS
04	CC	4,242	R13.9/23.2, 0.0/3.4	23	40

REGISTERED ELECTRICAL ENGINEER 06-08-12 DATE

June 11, 2012
PLANS APPROVAL DATE

REGISTERED PROFESSIONAL ENGINEER Ray C. Duschane No. 14758 Exp. 6-30-13 ELECT STATE OF CALIFORNIA

THE STATE OF CALIFORNIA OR ITS OFFICERS OR AGENTS SHALL NOT BE RESPONSIBLE FOR THE ACCURACY OR COMPLETENESS OF SCANNED COPIES OF THIS PLAN SHEET.

STATE OF CALIFORNIA
DEPARTMENT OF TRANSPORTATION
111 GRAND AVE
OAKLAND, CA. 94623

METROPOLITAN TRANSPORTATION COMMISSION
101 EIGHTH STREET
OAKLAND, CA. 94607

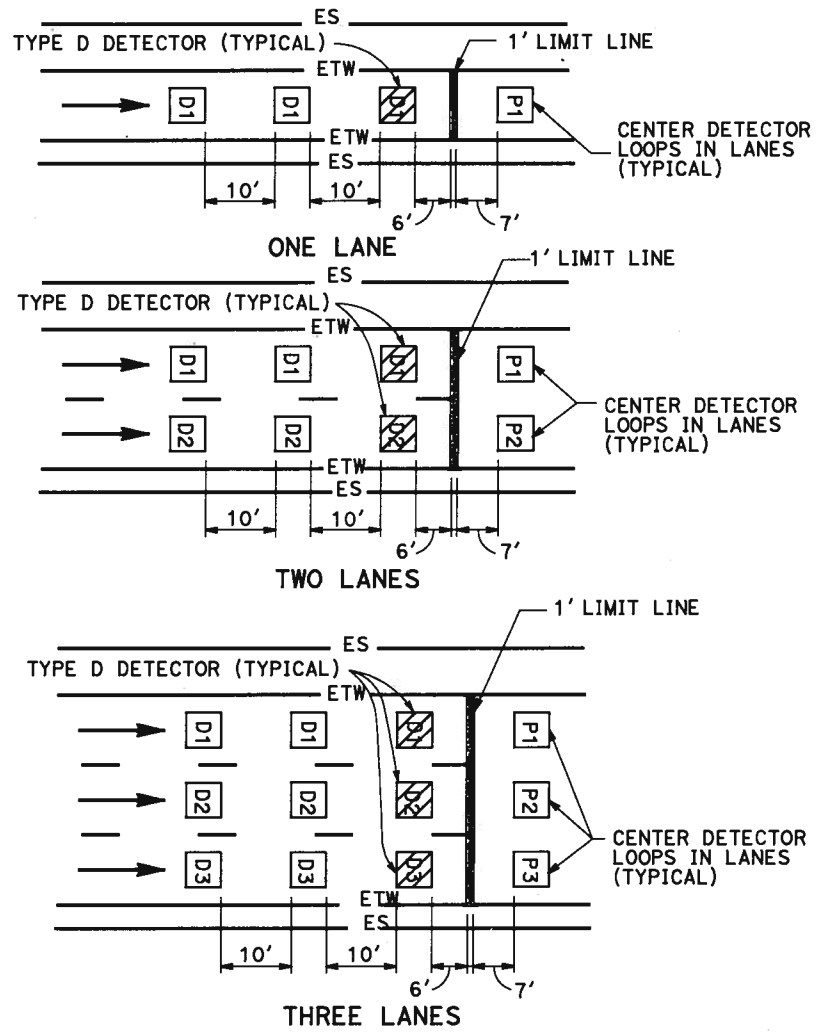

ONE LANE

TWO LANES

THREE LANES

DETAIL "RM"
RAMP METERING STATION

RAMP METERING STATION NOTES

1. SEE ES-5A, ES-5B, AND ES-13A FOR ADDITIONAL DETAILS.
2. DLC CONDUCTORS SHALL BE SPLICED TO THE LOOP CONDUCTORS IN THE NEAREST PULLBOX.
3. ALL SPLICES SHALL BE TYPE "S" OR TYPE "ST" AS REQUIRED.

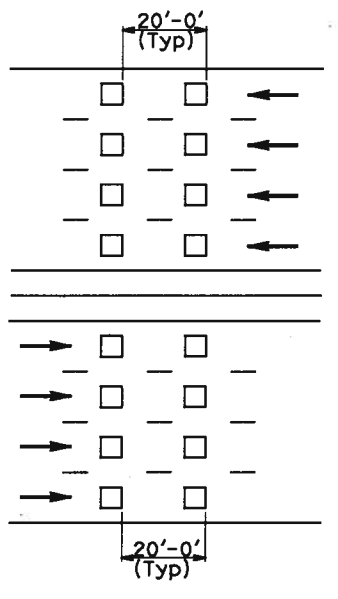

TRAFFIC MONITORING STATION NOTES

FREEWAY MAINLINE DETECTOR DESIGNATION:

N=NORTHBOUND LANES (NB)
S=SOUTHBOUND LANES (SB)
E=EASTBOUND LANES (EB)
W=WESTBOUND LANES (WB)

NUMBER OF LANES FROM LEFT WITH RESPECT TO DIRECTION OF TRAFFIC:

1=FIRST LANE FROM LEFT
2=SECOND LANE FROM LEFT
3=THIRD LANE FROM LEFT
4=FOURTH LANE FROM LEFT

NUMBER OF DETECTOR IN THE SAME LANE:

1=ENTERING DETECTOR
2=LEAVING DETECTOR

N 3-2

DETAIL "TM"
TRAFFIC MONITORING STATION

RAMP DETECTOR DESIGNATION:

D=DEMAND DETECTOR
P=PASSAGE DETECTOR
Q=QUEUE DETECTOR
F=OFFRAMP DETECTOR

1=FIRST LANE FROM LEFT
2=SECOND LANE FROM LEFT

D-2

ELECTRICAL DETAILS
(RAMP METERING AND TRAFFIC MONITORING DETECTOR SPACING AND DESIGNATION)

NO SCALE

APPROVED FOR ELECTRICAL WORK ONLY

E-21

STATE OF CALIFORNIA - DEPARTMENT OF TRANSPORTATION
Caltrans
ELECTRICAL

FUNCTIONAL SUPERVISOR: CHARLES PRICE
CALCULATED-DESIGNED BY: RAY DUSCHANE
CHECKED BY: RAY DUSCHANE
REVISED BY: R.D.
DATE REVISED: 06/08/12

LAST REVISION 10-08-12
DATE PLOTTED => 08-OCT-2012
TIME PLOTTED => 14:43

Dist	COUNTY	ROUTE	POST MILES TOTAL PROJECT	SHEET No.	TOTAL SHEETS
04	CC	4,242	R13.9/23.2, 0.0/3.4	24	40

R C Duschane 06-08-12
REGISTERED ELECTRICAL ENGINEER DATE

June 11, 2012
PLANS APPROVAL DATE

REGISTERED PROFESSIONAL ENGINEER Ray C. Duschane No. 14758 Exp. 6-30-13 ELECT STATE OF CALIFORNIA

THE STATE OF CALIFORNIA OR ITS OFFICERS OR AGENTS SHALL NOT BE RESPONSIBLE FOR THE ACCURACY OR COMPLETENESS OF SCANNED COPIES OF THIS PLAN SHEET.

STATE OF CALIFORNIA
DEPARTMENT OF TRANSPORTATION
111 GRAND AVE
OAKLAND, CA. 94623

METROPOLITAN
TRANSPORTATION
COMMISSION
101 EIGHTH STREET
OAKLAND, CA. 94607

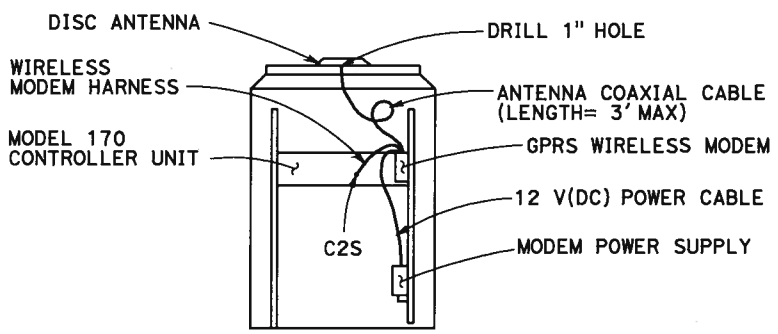

REAR VIEW OF THE MODEL 334 CONTROLLER CABINET

GPRS WIRELESS MODEM AND ANTENNA INSTALLATION DETAIL

CONTRACTOR'S WORK IN THE CONTROLLER CABINET

1. PROVIDE THE GPRS MODEM AND WIRELESS MODEM HARNESS TO THE ENGINEER 30 WORKING DAYS BEFORE INSTALLATION. THE ENGINEER WILL RETURN THE PROGRAMMED MODEM, WITH PDP CONTEXT AND APN AND HARNESS WITHIN 15 WORKING DAYS.
2. DRILL 1" HOLE THROUGH THE TOP OF THE CABINET. ATTACH THE ANTENNA ON THE CABINET AS DIRECTED BY THE MANUFACTURER.
3. MOUNT THE MODEM UNIT ON THE CABINET REAR MOUNTING RAIL WITH MOUNTING BRACKET PROVIDED BY THE MANUFACTURER.
4. MOUNT THE MODEM 12 V DC POWER SUPPLY DIRECTLY TO CABINET.
5. CONNECT POWER CABLE TO 12 V(DC) POWER ADAPTER.
6. CONNECT THE ANTENNA COAXIAL CABLE TO THE MODEM.
7. CONNECT MODEM HARNESS BETWEEN THE MODEM AND THE MODEL 170 CONTROLLER UNIT AS SHOWN.
8. RECORD THE SERIAL NUMBER OF THE MODEM ON THE CHECK LIST SHEET.

ABBREVIATIONS

APN = ACCESS POINT NUMBER
PDP = PACKET DATA PROTOCOL

COMMUNICATION SERIAL CABLE TYPE D

1. CABLE PIN OUT DIAGRAM
   AMP 201360-2-ND

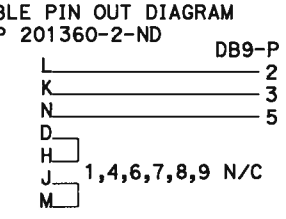

2. CONSTRUCT AND INSTALL COMMUNICATION CABLE. SEE SPECIAL PROVISIONS FOR CABLE TYPE AND OTHER INFORMATION.

ELECTRICAL DETAILS
(GENERAL PACKET RADIO SYSTEM WIRELESS MODEM INSTALLATION DETAILS)
NO SCALE

APPROVED FOR ELECTRICAL WORK ONLY

E-22

STATE OF CALIFORNIA - DEPARTMENT OF TRANSPORTATION
Caltrans ELECTRICAL

FUNCTIONAL SUPERVISOR: CHARLES PRICE
CALCULATED-DESIGNED BY: RAY DUSCHANE
CHECKED BY: RAY DUSCHANE
REVISED BY: R.D.
DATE REVISED: 06/08/12

LAST REVISION 07-10-12
DATE PLOTTED => 08-OCT-2012
TIME PLOTTED => 14:44

Dist	COUNTY	ROUTE	POST MILES TOTAL PROJECT	SHEET No.	TOTAL SHEETS
04	CC	4,242	R13.9/23.2, 0.0/3.4	25	40

REGISTERED ELECTRICAL ENGINEER 06-07-12 DATE

June 11, 2012
PLANS APPROVAL DATE

REGISTERED PROFESSIONAL ENGINEER Mahmood Noii No. 13717 Exp 6-30-13 ELECT STATE OF CALIFORNIA

THE STATE OF CALIFORNIA OR ITS OFFICERS OR AGENTS SHALL NOT BE RESPONSIBLE FOR THE ACCURACY OR COMPLETENESS OF SCANNED COPIES OF THIS PLAN SHEET.

STATE OF CALIFORNIA
DEPARTMENT OF TRANSPORTATION
111 GRAND AVE
OAKLAND, CA. 94623

METROPOLITAN
TRANSPORTATION
COMMISSION
101 EIGHTH STREET
OAKLAND, CA. 94607

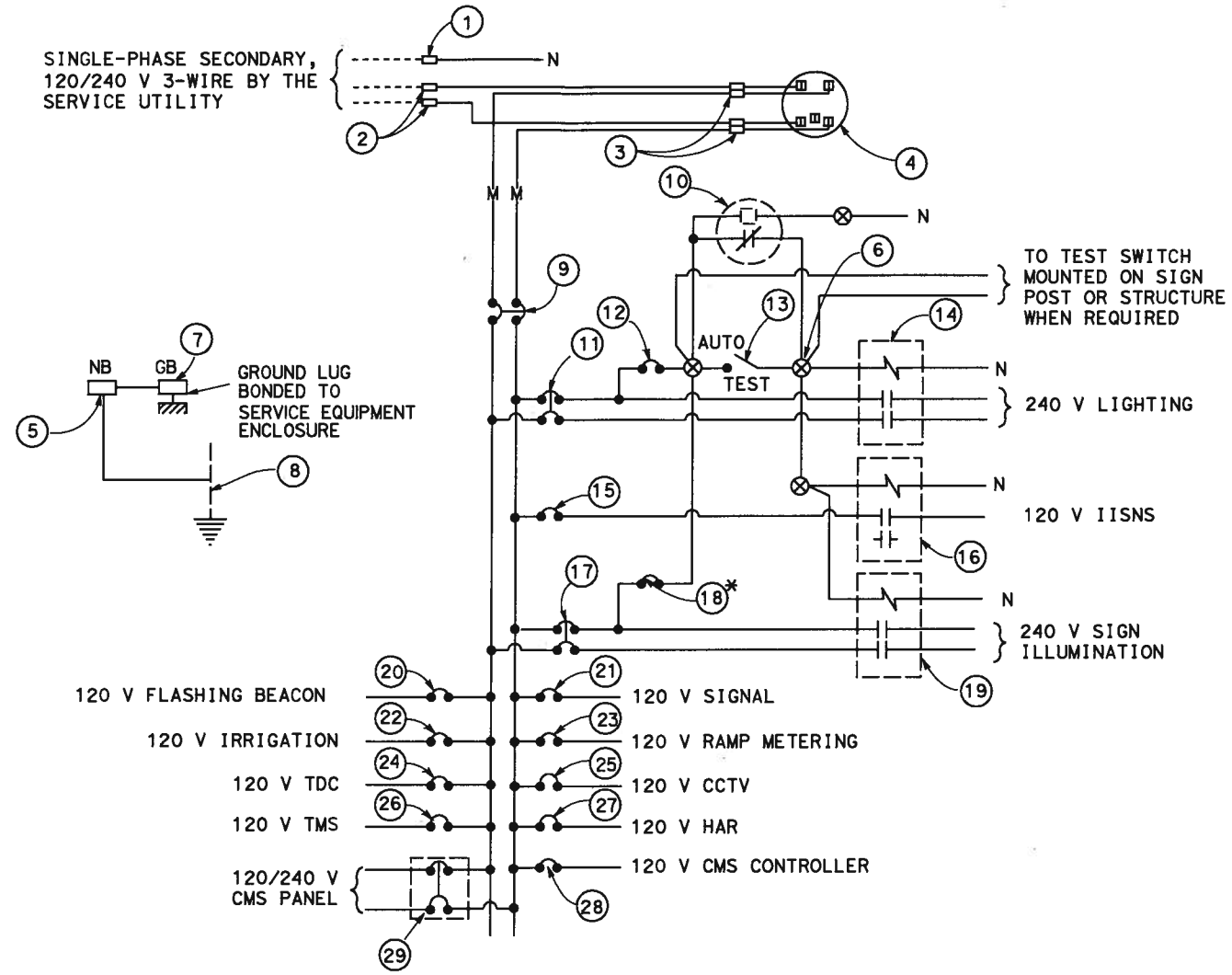

120/240 V SERVICE WIRING DIAGRAM (TYPICAL)

TYPE III-A SERVICE (120/240 V) EQUIPMENT LEGEND

ITEM No.	COMPONENT	NAMEPLATE DESCRIPTION
1	NEUTRAL LUG	
2	LANDING LUG	
3	TEST BYPASS FACILITY	
4	METER SOCKET AND SUPPORT	
5	NEUTRAL BUS	
6	TERMINAL BLOCK	
7	GROUND BUS	
8	GROUNDING ELECTRODE	
9	100 A, 240 V, 2P, CB	MAIN BREAKER
10	PHOTOELECTRIC UNIT (NOTE 7)	
11	30 A, 240 V, 2P, CB	LIGHTING
12	15 A, 120 V, 1P, CB	LIGHTING CONTROL
13	15 A, 1P, TEST SWITCH	TEST SWITCH
14	30 A, 2PNO, CONTACTOR	
15	15 A, 120 V, 1P, CB	IISNS
16	30 A, 2PNO, CONTACTOR	

ITEM No.	COMPONENT	NAMEPLATE DESCRIPTION
17	30 A, 240 V, 2P, CB	SIGN ILLUMINATION
18*	15 A, 120 V, 1P, CB	SIGN ILLUMINATION CONTROL
19	30 A, 2PNO, CONTACTOR	
20	15 A, 120 V, 1P, CB	FLASHING BEACON
21	50 A, 120 V, 1P, CB	SIGNALS
22	20 A, 120 V, 1P, CB	IRRIGATION
23	30 A, 120 V, 1P, CB	RAMP METERING
24	15 A, 120 V, 1P, CB	TELEPHONE DEMARCATION CABINET
25	30 A, 120 V, 1P, CB	CCTV
26	30 A, 120 V, 1P, CB	TMS
27	30 A, 120 V, 1P, CB	HAR
28	30 A, 120 V, 1P, CB	CMS CONTROLLER
29	30 A, 240 V, 2P, CB	CMS PANEL

* PROVIDE ITEM 12 WHEN BOTH CIRCUITS OF SIGN ILLUMINATION AND LIGHTING ARE USED. ITEM 18 IS NOT REQUIRED.

LEGEND:
(SEE ES-1A & ES-1C)

NOTES: (FOR SERVICE EQUIPMENT)

1. VOLTAGE RATINGS OF SERVICE EQUIPMENT SHALL CONFORM TO THE SERVICE VOLTAGES INDICATED ON THE PLANS.
2. UNLESS OTHERWISE INDICATED ON THE PLANS, ALL SERVICE EQUIPMENT ITEMS SHALL BE PROVIDED FOR EACH SERVICE EQUIPMENT ENCLOSURE AS SHOWN.
3. ITEM NO. 1 AND 5 SHALL BE ISOLATED FROM THE CABINET.
4. METER SOCKETS SHALL BE 5 CLIP TYPE.
5. SERVICE UTILITY WILL INSTALL THE TIME-OF-USE METER IF APPLICABLE.
6. UNLESS OTHERWISE NOTED, THE MAXIMUM NUMBER OF SINGLE-POLE CB SPACES IN THE ENCLOSURE IS FOURTEEN.
7. PHOTOELECTRIC CONTROL SHALL BE TYPE II.

ELECTRICAL DETAILS
(SERVICE EQUIPMENT AND TYPICAL WIRING DIAGRAM TYPE III-A SERIES)

NO SCALE

APPROVED FOR ELECTRICAL WORK ONLY

E-23

P.L.	06/07/12		
REVISED BY	DATE REVISED		
PIERRE LASSALLE	MAHMOOD NOII		
CALCULATED-DESIGNED BY	CHECKED BY		
FUNCTIONAL SUPERVISOR	MAHMOOD NOII		

STATE OF CALIFORNIA - DEPARTMENT OF TRANSPORTATION
ELECTRICAL

LAST REVISION 08-08-12 DATE PLOTTED => 08-OCT-2012 TIME PLOTTED => 14:44

DIST	COUNTY	ROUTE	POST MILES TOTAL PROJECT	SHEET NO.	TOTAL SHEETS
04	CC	4,242	R13.9/23.2, 0.0/3.4	26	40

REGISTERED ELECTRICAL ENGINEER

October 5, 2007
PLANS APPROVAL DATE

REGISTERED PROFESSIONAL ENGINEER Jeffery G. McRae No. E14512 Exp. 6-30-08 ELECTRICAL STATE OF CALIFORNIA

The State of California or its officers or agents shall not be responsible for the accuracy or completeness of electronic copies of this plan sheet.

To accompany plans dated 6-11-12

ELECTROLIERS

STANDARD TYPES
15, 15D
15 STRUCTURE
21, 21D STRUCTURE
30
31
32
35
36-20A

High mast light pole

Double Arm lighting standard

Existing electrolier

Electrolier foundation (Future installation)

NOTES:

1. Luminaires shall be 310 W HPS when installed on Type 21, 21D, 30, 31, 32, 35 and 36-20A Standards, unless otherwise specified. Luminaires shall be 200 W HPS when installed on other type standards or poles, unless otherwise specified.
2. Luminaires shall be the cutoff type, ANSI Type III medium cutoff lighting distribution, unless otherwise specified.
3. Variations noted adjacent to symbol on project plans.

Electrolier (see project notes or project plans)

Luminaire on wood pole

STANDARD NOTES:

- AB Abandon. If applied to conduit, remove conductors.
- BC Install pull box in existing conduit run.
- BP Pedestrian barricade, type as indicated on plan.
- CB Install conduit into existing pull box.
- CC Connect new and existing conduit. Remove existing conductors and install conductors as indicated.
- CF Conduit to remain for future use. Remove conductors. Install pull wire or rope.
- DH Detector handhole.
- FA Foundation to be abandoned.
- IS Install sign on signal mast arm.
- NS No slip base on standard.
- PEC Photoelectric control.
- PEU Photoelectric unit.
- RC Equipment or material to be removed and become the property of the Contractor.
- RE Remove electrolier, fuses and ballast. Tape ends of conductors.
- RL Relocate equipment.
- RR Remove and reuse equipment.
- RS Remove and salvage equipment.
- SC Splice new to existing conductors.
- SD Service disconnect.
- SF Standard to remain for future use. Remove luminaire, pole conductors, fuses and ballast.
- TSP Telephone service point.

ABBREVIATIONS AND EQUIPMENT DESIGNATIONS

PROPOSED	EXISTING	
BBS	bbs	Battery backup system
BC	bc	Bolt circle
C	C	Conduit
CCTV	cctv	Closed circuit television
CKT	ckt	Circuit
CMS	cms	Changeable message sign
DLC	dlc	Loop detector lead-in cable
EMS	ems	Extinguishable message sign
EVC	evc	Emergency vehicle cable
EVD	evd	Emergency vehicle detector
FB	fb	Flashing beacon
FBCA	fbca	Flashing beacon control assembly
FBS	fbs	Flashing beacon with slip base
FO	fo	Fiber optic
G	G	Ground (Equipment Grounding Conductor)
GFCI	GFCI	Ground fault circuit interrupt
HAR	har	Highway advisory radio
HEX	hex	Hexagonal
HPS	hps	High pressure sodium
IISNS	iisns	Internally illuminated street name sign
ISL	isl	Induction sign lighting
LED	led	Light emitting diode
LMA	lma	Luminaire mast arm
LPS	lps	Low pressure sodium
LTG	ltg	Lighting
LUM	lum	Luminaire
MAT	mat	Mast arm mounting vehicle signal faces, top attachment
MAS	mas	Mast arm mounting vehicle signal faces, side attachment
MAS-4A	mas-4A	Mast arm mounting vehicle signal faces, side attachment - 4 signal section
MAS-4B	mas-4B	
MAS-4C	mas-4C	
MAS-5A	mas-5A	Mast arm mounting vehicle signal faces, side attachment - 5 signal section
MAS-5B	mas-5B	
MC	mc	Mercury contactor
M/M	m/m	Multiple to multiple transformer
MT	mt	Conduit with pull wire or rope only
MTG	mtg	Mounting
	mv	Mercury vapor lighting fixture
N	N	Neutral (Grounded Conductor)
NC	NC	Normally closed
NO	NO	Normally open
PB	pb	Pull box
PEC	pec	Photoelectric control (Type I, II, III, IV or V as shown)
PED	ped	Pedestrian
PEU	peu	Photoelectric unit
PPB	ppb	Pedestrian push button
RL		Relocated equipment
RM	rm	Ramp metering
SB	sb	Slip base
SIC	sic	Signal interconnect cable
SIG	sig	Signal
SMA	sma	Signal mast arm
SNS	sns	Street name sign
SP	sp	Service point
TDC	tdc	Telephone demarcation cabinet
TMS	tms	Traffic monitoring station
TOS	tos	Traffic Operations System
VEH	veh	Vehicle
XFMR	xfmr	Transformer
COMM	comm	Communication
RWIS	rwis	Roadway weather information system

SOFFIT AND WALL MOUNTED LUMINAIRES

Pendant, 70 W HPS unless otherwise specified.

Flush, 70 W HPS unless otherwise specified.

Wall surface, 70 W HPS unless otherwise specified.

Existing soffit or wall luminaire to remain unmodified.

Existing soffit or wall luminaire to be modified as specified.

NOTE:

Arrow indicates "street side" of luminaire.

STATE OF CALIFORNIA
DEPARTMENT OF TRANSPORTATION

ELECTRICAL SYSTEMS (SYMBOLS AND ABBREVIATIONS)

NO SCALE

RSP ES-1A DATED OCTOBER 5, 2007 SUPERSEDES STANDARD PLAN ES-1A DATED MAY 1, 2006 - PAGE 400 OF THE STANDARD PLANS BOOK DATED MAY 2006.

REVISED STANDARD PLAN RSP ES-1A

2006 REVISED STANDARD PLAN RSP ES-1A

7-10-07

DIST	COUNTY	ROUTE	POST MILES TOTAL PROJECT	SHEET NO.	TOTAL SHEETS
04	CC	4,242	R13.9/23.2, 0.0/3.4	27	40

REGISTERED ELECTRICAL ENGINEER

October 5, 2007
PLANS APPROVAL DATE

REGISTERED PROFESSIONAL ENGINEER Jeffery G. McRae No. E14512 Exp. 6-30-08 ELECTRICAL STATE OF CALIFORNIA

The State of California or its officers or agents shall not be responsible for the accuracy or completeness of electronic copies of this plan sheet.

To accompany plans dated 6-11-12

CONDUIT

PROPOSED	EXISTING	
		Lighting Conduit, unless otherwise indicated or noted
		Traffic signal conduit
—C—	—c—	Communication conduit
—T—	—t—	Telephone conduit
—F—	—f—	Fire alarm conduit
—FO—	—fo—	Fiber optic conduit
		Conduit termination RSP ES-9A C
R	r	Conduit riser in/on structure or service pole

SERVICE EQUIPMENT

PROPOSED	EXISTING	
OH	oh	Overhead lines
U	U	Wood pole "U" indicates utility owned
		Pole guy with anchor
		Utility transformer - ground mounted
III		Service equipment enclosure type
		Service equipment enclosure door indicates front of enclosure
T	t	Telephone demarcation cabinet

POLE-MOUNTED SERVICE DESIGNATION

Type of installation

TYPE H SERVICE - 28'-10" ← Pole height above grade

ILLUMINATED OVERHEAD SIGN

PROPOSED	EXISTING	
		Overhead sign - Single post
		Overhead sign - Two post
		Overhead sign - Mounted on structure
		Overhead sign with electrolier

SIGNAL EQUIPMENT

PROPOSED	EXISTING	
		Pedestrian signal face
		Pedestrian push button post
		Pedestrian barricade
		Vehicle signal face (with backplate, 3-Section: red, yellow and green)
		Vehicle signal face with angle visors
PV	PV	Modifications of basic symbols: "L" Indicates all non-arrow sections louvered "LG" Indicates louvered green section only "PV" indicates 12" programmed visibility sections "8" indicates all 8" sections (only when specified)
		Type 15TS and Vehicle signal face
		Vehicle signal face with red, yellow and green left arrow sections
		Vehicle signal face with red and yellow sections and up green arrow
		Vehicle signal face (5 Section) with red, yellow and green sections and yellow and green right arrows
		Type 1 Standard and attached vehicle signal faces
		Standard with signal mast arm only and attached vehicle signal faces and internally illuminated street name sign
		Type 33 Standard, Left-turn vehicle signal face and sign
		Standard with luminaire and signal mast arms and attached vehicle signal faces
		Cantilever flashing beacon Type 9 Frame, with a sign unless otherwise specified or indicated
		Type 15-FBS Standard with two vehicle signal face sections with lens, backplate and visor with a sign
R	Y	Flashing beacon. One vehicle signal face section with lens, backplate and visor. "R" indicates red indication, "Y" indicates yellow indication
		Controller assembly. Door indicates front of cabinet

SIGNAL EQUIPMENT Cont

PROPOSED	EXISTING	
		Guard post
		Type 1 Standard with "Meter On" sign
		Emergency Vehicle detector

NOTES:

1. All signal sections shall be 12" unless shown otherwise.
2. Signal heads shall be provided with backplates unless shown otherwise.
3. Signal indication shall be LED.

STATE OF CALIFORNIA
DEPARTMENT OF TRANSPORTATION

ELECTRICAL SYSTEMS (SYMBOLS AND ABBREVIATIONS)

NO SCALE

RSP ES-1B DATED OCTOBER 5, 2007 SUPERCEDES STANDARD PLAN ES-1B DATED MAY 1, 2006 - PAGE 401 OF THE STANDARD PLANS BOOK DATED MAY 2006.

REVISED STANDARD PLAN RSP ES-1B

2006 REVISED STANDARD PLAN RSP ES-1B

DIST	COUNTY	ROUTE	POST MILES TOTAL PROJECT	SHEET NO.	TOTAL SHEETS
04	CC	4,242	R13.9/23.2, 0.0/3.4	28	40

REGISTERED ELECTRICAL ENGINEER

October 5, 2007
PLANS APPROVAL DATE

The State of California or its officers or agents shall not be responsible for the accuracy or completeness of electronic copies of this plan sheet.

REGISTERED PROFESSIONAL ENGINEER Jeffery G. McRae No. E14512 Exp. 6-30-08 ELECTRICAL STATE OF CALIFORNIA

To accompany plans dated 6-11-12

EQUIPMENT IDENTIFICATION

ILLUMINATED SIGN IDENTIFICATION NUMBER:

Sign No. 12345
10 ISL SCI 1.0

- Sign number - Place on post or structure
- Transformer rating (kVA)
- Lighting control type
- Number and type of fixtures

} Do NOT place on standard or structure

ELECTROLIER OR EQUIPMENT IDENTIFICATION NUMBER:

12345 - 15'-0"

- Mast arm length, if shown. Do not place on standard or structure.
- Equipment number - Place on standard or structure. Existing equipment numbers are shown in parenthesis

CONDUIT AND CONDUCTOR IDENTIFICATION:

1½"C, 2#10, 15#14, 2 DLC

- Number and size of conductors and cables
- Size of conduit in inches

ø1, ø2, ø2P, etc.	Traffic phase identification for signal faces, detectors and phase diagrams
1 2 3	Project note numbers
A B C	Equipment description, installation or item numbers
1 2 3	Conduit run numbers

SIGNAL AND LIGHTING STANDARD (TYPICAL DESIGNATION):

19A - 3 - 100

- Wind velocity = 100 mph
- Case 3 arm loading
- Standard type
- Standard Plan sheet number
- Detail number or letter

MISCELLANEOUS EQUIPMENT

PROPOSED	EXISTING	
CMS	cms	Changeable message sign
		Closed circuit television camera
		Highway advisory radio pole and antenna
EMS	ems	Extinguishable message sign
M V	m v	Detection device M = Microwave sensor V = Video image sensor

WIRING DIAGRAM LEGEND

P	Pole
CB	Circuit breaker
A	Ampere
V	Volt
M	Metered
UM	Unmetered
NB	Neutral bus
GB	Ground bus
G	Equipment grounding conductor
N	Grounded conductor (Neutral)

- External conductor
- Conductor or bus
- Tie point
- Contactor coil
- Contactor, Contact NO
- Terminal blocks
- Contactor, Contact NC
- Enclosure bond
- Grounding electrode
- Circuit breaker
- Receptacle

PULL BOXES

PROPOSED	EXISTING	
		Pull box-No. 5 unless otherwise indicated or noted.
3	9A(21)	Pull box-Additional designations or descriptions

3 = No. 3½ pull box
5 = No. 5 pull box
6 = No. 6 pull box
7 = No. 7 (Ceiling pull box)
8 = No. 8 (Pendant soffit pull box)
9 = No. 9 pull box
9A = No. 9A pull box

(C) = Communications pull box
(E) = Pull box with extension
(S) = Sprinkler control pull box
(21) = Anchor bolts and conduit for future installation of Type 21 Standard
(T) = Traffic pull box

VEHICLE DETECTORS

5 J 9 U

- Vehicle detector designation
- U = Upper
  L = Lower
- Slot number in input file
- Input file (I or J)
- Phase

PROPOSED	EXISTING	
		Type A detector loop. Outline of sawcut shown.
		Type B detector loop. Outline of sawcut shown.
		Type C detector loop. Outline of sawcut shown.
		Type D detector loop. Outline of sawcut shown.
		Type E detector loop. Outline of sawcut shown.
		Type Q detector loop. Outline of sawcut shown.
		Magnetic detector
DH	dh	Detector handhole
		Microwave or video detection zone

STATE OF CALIFORNIA
DEPARTMENT OF TRANSPORTATION

ELECTRICAL SYSTEMS (SYMBOLS AND ABBREVIATIONS)

NO SCALE

RSP ES-1C DATED OCTOBER 5, 2007 SUPERCEDES STANDARD PLAN ES-1C DATED MAY 1, 2006 - PAGE 402 OF THE STANDARD PLANS BOOK DATED MAY 2006.

REVISED STANDARD PLAN RSP ES-1C

2006 REVISED STANDARD PLAN RSP ES-1C

7-10-07

DIST	COUNTY	ROUTE	POST MILES TOTAL PROJECT	SHEET NO.	TOTAL SHEETS
04	CC	4,242	R13.9/23.2, 0.0/3.4	29	40

Jeffery G. McRae
REGISTERED ELECTRICAL ENGINEER

October 5, 2007
PLANS APPROVAL DATE

REGISTERED PROFESSIONAL ENGINEER
Jeffery G. McRae
No. E14512
Exp. 6-30-08
ELECTRICAL
STATE OF CALIFORNIA

The State of California or its officers or agents shall not be responsible for the accuracy or completeness of electronic copies of this plan sheet.

To accompany plans dated 6-11-12

NOTES-TYPE III SERVICE EQUIPMENT ENCLOSURES:

1. Service equipment enclosure and metering equipment shall meet the requirements of the service utility. The meter area shall have a sealable, lockable, weathertight cover that can be removed without the use of tools.

2. Service equipment enclosures shall be factory wired and conform to NEMA standards.

3. Dimensions of service equipment enclosures shall meet the requirements of the service utility.

4. The dead front panels on Type III service equipment enclosures shall have a continuous stainless steel or aluminum piano hinge. The panel in front of the breakers shall be secured with a latch or captive screws. No live parts shall be mounted on the dead front panel.

5. The exterior door shall have provisions for padlocking. The padlock hole shall be a minimum diameter of 7/16".

6. Enclosures housing transformers of more than one kVA shall have effective screened ventilation louver of not less than 50 square inches. Screen shall be stainless steel No. 304, with a No. 10 size mesh. Framed screen shall be secured with at least four bolts.

7. Fasteners on the exterior of the enclosure shall be vandal-resistant and shall not be removable from the exterior. Exterior screws, nuts, bolts and washers shall be stainless steel.

8. Landing lugs for incoming service conductors shall be compatible with either copper or aluminum conductors sized to suit the conductors shown on the plan. Landing lugs shall be copper or tin-plated aluminum. Neutral bus shall be rated for 125 A and be suitable for copper or aluminum conductors unless otherwise specified. The terminal shall include but not be limited to:

   a) Incoming terminals (landing lugs)
   b) Neutral lugs
   c) Solid neutral terminal strip

9. At least 6 standard single pole circuit breaker spaces, 3/4" nominal, shall be provided for branch circuits. Circuit breaker interiors shall be copper. Interiors of enclosure shall accept plug-in or cable-in/cable-out circuit breakers.

10. Control wiring shall be 600 V, 14 stranded machine tool wire. Where subject to flexing, 19 strand wire shall be used.

11. Main bus shall be rated for 125 A and shall be tin-plated copper.

12. A plastic laminated wiring diagram shall be provided with brass mounting eyelets and attached to the inside of the enclosure and the wiring diagram shall be affixed to the interior with a UL or ETL approved method.

13. An engraved phenolic nameplate on the dead front panel indicating the function of each circuit or device shall be installed with stainless steel rivets or stainless steel screws:

    a) Adjacent to the breaker or device with character size a minimum of 1/8".

    b) At the top of the exterior door panel indicating State system number, voltage level and number of phases with character size a minimum of 3/16".

14. The plan shows the approximate location of devices within the enclosure. Components may be rearranged, however, the "working" clearances within the service equipment enclosure shall be maintained.

15. In unpaved areas a raised portland cement concrete pad 2'-0" x 4" x width of foundation shall be constructed in front of new service equipment enclosure installation. Pad shall be set to elevation of foundation.

16. Foundation shall extend 2" minimum beyond edge of service equipment enclosure.

17. Internal bus, where shown, is typical only. Alternative design of proposed service equipment enclosure shall be submitted to the Engineer for approval.

18. Plug-in circuit breakers may be mounted in the vertical or horizontal position. Cable-in/cable-out circuit breakers shall be mounted in the vertical position.

19. Type III-AF and Type III-BF service equipment enclosures shall have the meter viewing windows located on the front side of the service equipment enclosures.

20. Type III-AR and Type III-BR service equipment enclosures shall be similarly constructed as Type III-AF and Type III-BF respectively, except the meter viewing windows shall be located on the back side of the service equipment enclosures.

21. Minimum clearance shall be required for front and back of service equipment enclosure per National Electrical Code, Article 110.26, "Spaces About Electric Equipment (600 Volts, Nominal, or Less)."

STATE OF CALIFORNIA
DEPARTMENT OF TRANSPORTATION

ELECTRICAL SYSTEMS (SERVICE EQUIPMENT NOTES TYPE III SERIES)

NO SCALE

RSP ES-2C DATED OCTOBER 5, 2007 SUPERCEDES STANDARD PLAN ES-2C DATED MAY 1, 2006 - PAGE 405 OF THE STANDARD PLANS BOOK DATED MAY 2006.

REVISED STANDARD PLAN RSP ES-2C

2006 REVISED STANDARD PLAN RSP ES-2C

DIST	COUNTY	ROUTE	POST MILES TOTAL PROJECT	SHEET NO.	TOTAL SHEETS
04	CC	4,242	R13.9/23.2, 0.0/3.4	30	40

REGISTERED ELECTRICAL ENGINEER

October 5, 2007
PLANS APPROVAL DATE

REGISTERED PROFESSIONAL ENGINEER Jeffery G. McRae No. E14512 Exp. 6-30-08 ELECTRICAL STATE OF CALIFORNIA

The State of California or its officers or agents shall not be responsible for the accuracy or completeness of electronic copies of this plan sheet.

To accompany plans dated 6-11-12

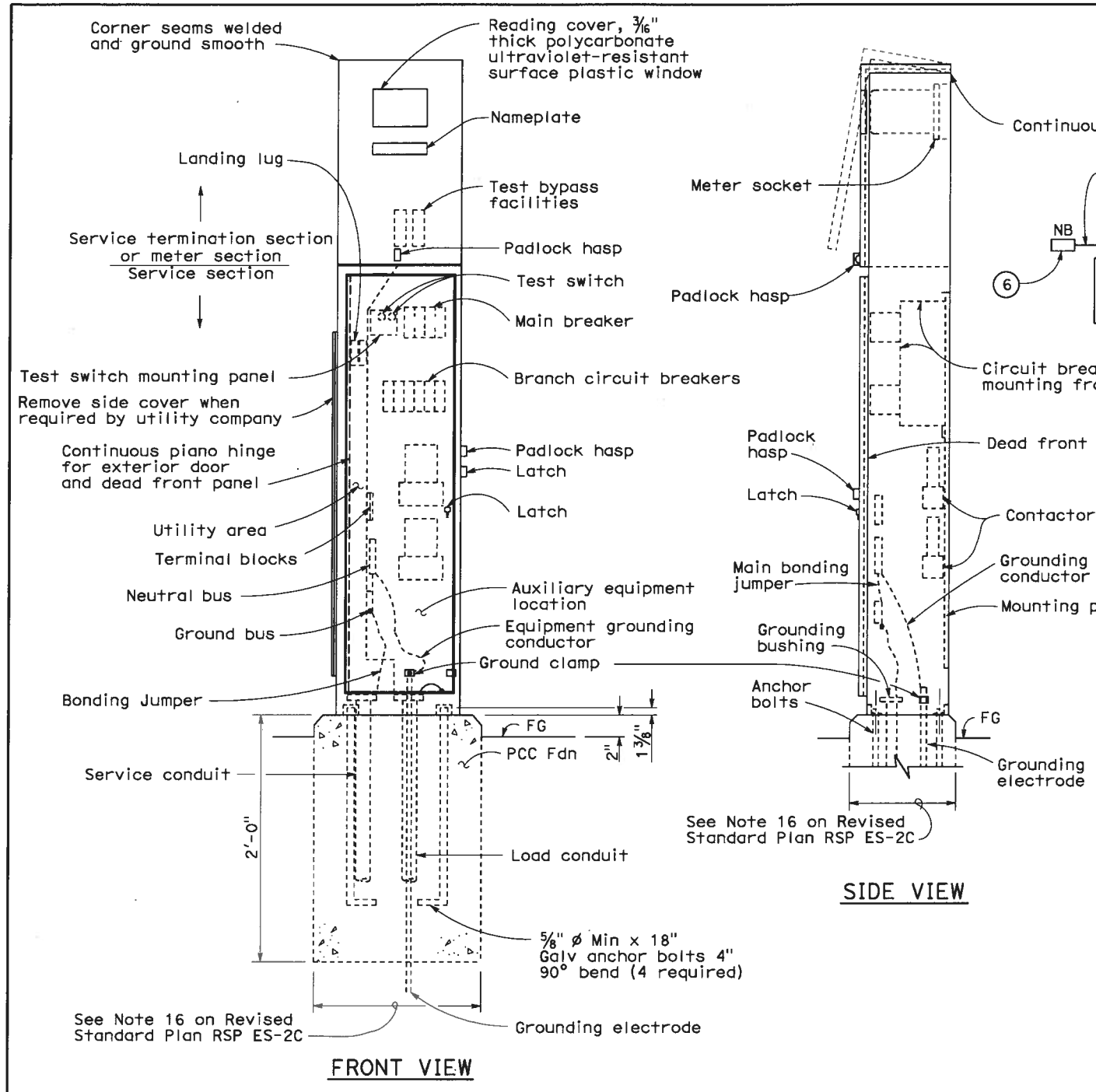

TYPE III-AF SERVICE EQUIPMENT ENCLOSURE (TYPICAL)

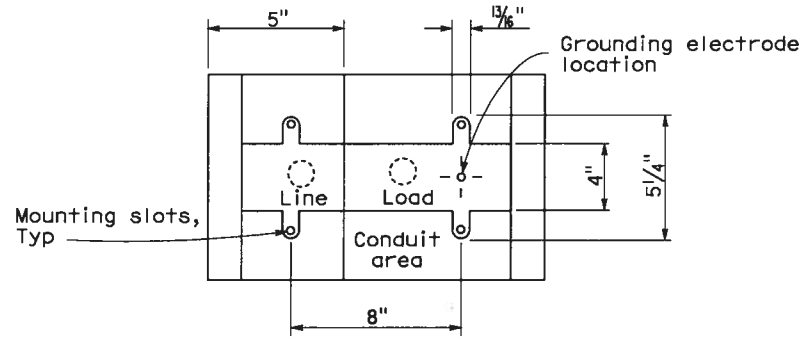

BASE FOR TYPE III-A SERVICE EQUIPMENT ENCLOSURE

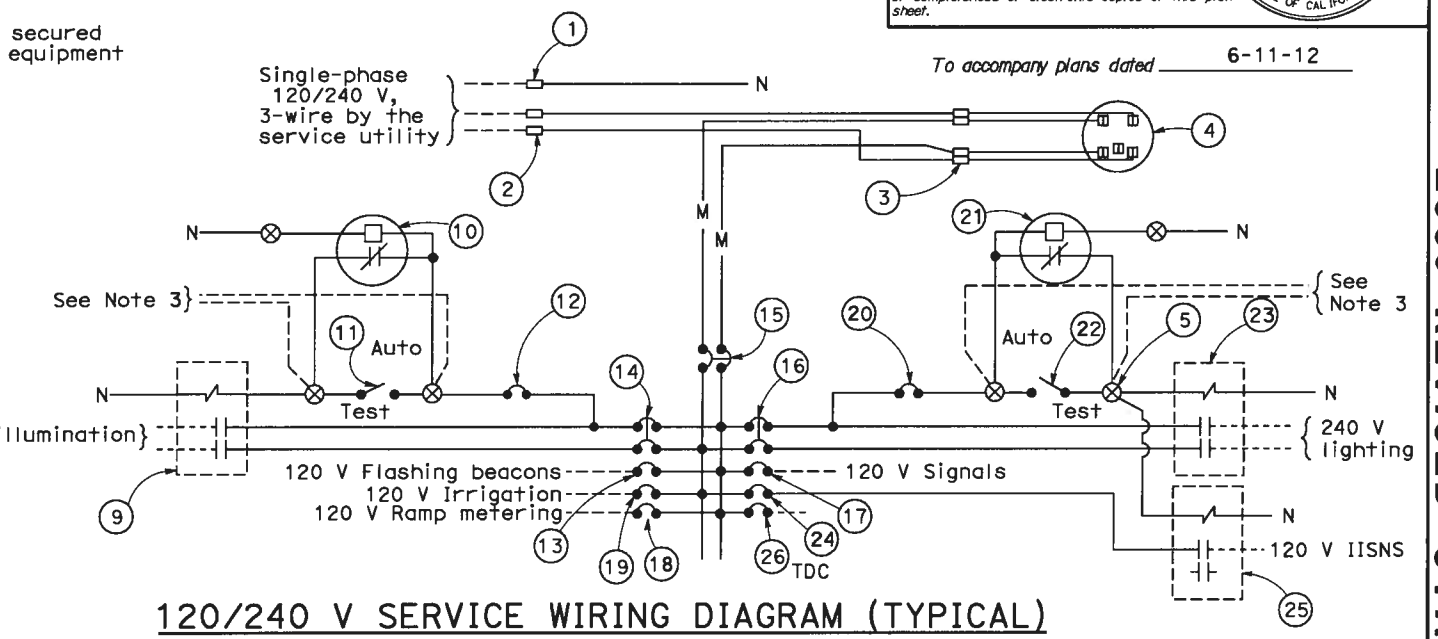

120/240 V SERVICE WIRING DIAGRAM (TYPICAL)

TYPE III-A SERVICE (120/240 V) EQUIPMENT LEGEND

ITEM No.	COMPONENT	NAME PLATE DESCRIPTION	ITEM No.	COMPONENT	NAME PLATE DESCRIPTION
1	Neutral lug		14	30 A, 240 V, 2P, CB	Sign Illumination
2	Landing lug (Note 6)		15	100 A, 240 V, 2P, CB	Main Breaker
3	Test bypass facility		16	30 A, 240 V, 2P, CB	Lighting
4	Meter socket and support		17	50 A, 120 V, 1P, CB	Signals
5	Terminal blocks		18	30 A, 120 V, 1P, CB	Ramp Metering
6	Neutral bus		19	20 A, 120 V, 1P, CB	Irrigation
7	Ground bus		20	15 A, 120 V, 1P, CB	Lighting Control
8	Grounding electrode		21	Photoelectric unit (Note 7)	
9	30 A, 2PNO Contactor	Sign Illumination	22	15 A, 1P, Test switch	Lighting Test Switch
10	Photoelectric unit (Note 7)		23	60 A, 2PNO Contactor	Lighting
11	15 A, 1P, Test switch	Sign Illumination Test Switch	24	15 A, 120 V, 1P, CB	IISNS
12	15 A, 120 V, 1P, CB	Sign Illumination Control	25	30 A, 2PNO Contactor	IISNS
13	15 A, 120 V, 1P, CB	Flashing Beacon	26	20 A, 120 V, 1P, CB	Telephone Demarcation Cabinet

NOTES: (FOR SERVICE EQUIPMENT ENCLOSURE)

1. Voltage ratings of service equipment shall conform to the service voltages indicated on the plans.
2. Unless otherwise indicated on the plans, service equipment items shall be provided for each service equipment enclosure as shown.
3. Connect to remote test switch mounted on lighting standards, sign post or structure when required.
4. Items No. 1 and 6 shall be isolated from the service equipment enclosure.
5. Meter sockets shall be 5 clip type.
6. The landing lug shall be suitable for multiple conductors.
7. Type V photoelectric control shall be used unless otherwise indicated on the plans.

STATE OF CALIFORNIA
DEPARTMENT OF TRANSPORTATION

ELECTRICAL SYSTEMS (SERVICE EQUIPMENT AND TYPICAL WIRING DIAGRAM, TYPE III-A SERIES)

NO SCALE

RSP ES-2D DATED OCTOBER 5, 2007 SUPERCEDES STANDARD PLAN ES-2D DATED MAY 1, 2006 - PAGE 406 OF THE STANDARD PLANS BOOK DATED MAY 2006.

REVISED STANDARD PLAN RSP ES-2D

2006 REVISED STANDARD PLAN RSP ES-2D

7-10-07

DIST	COUNTY	ROUTE	KILOMETER POST TOTAL PROJECT	SHEET NO.	TOTAL SHEETS
04	CC	4,242	R13.9/23.2, 0.0/3.4	31	40

REGISTERED ELECTRICAL ENGINEER

October 5, 2007
PLANS APPROVAL DATE

REGISTERED PROFESSIONAL ENGINEER Jeffery G. McRae No. E14512 Exp. 6-30-08 ELECTRICAL STATE OF CALIFORNIA

The State of California or its officers or agents shall not be responsible for the accuracy or completeness of electronic copies of this plan sheet.

To get to the Caltrans web site, go to: http://www.dot.ca.gov

To accompany plans dated 6-11-12

NOTES - CONTROLLER CABINETS

1. Cabinet dimensions are nominal.
2. Foundations shall be located to provide 600 mm minimum clearance between face of curb and any portion of cabinet.
3. Type G, M, P, R, S and Model 336 cabinets shall be installed with the back toward the nearest lane of traffic.
4. The controller cabinet ground bus shall be bonded to the controller equipment enclosure.
5. In unpaved areas, a raised portland cement concrete pad shall be constructed in front of each controller cabinet. Pad shall be 900 mm x 900 mm x 100 mm for Type G cabinets and shall be 900 mm x 100 mm thick x width of foundation for Types M, P, R, S and Model 336 cabinets.
6. In unpaved areas, the top of foundation for Type G, P, R and S cabinets shall be 150 mm above surrounding grade. Top of foundation for Type M or Model 336 cabinet shall be 460 mm above surrounding grade.
7. In sidewalks and other paved areas, top of foundation for Type G cabinet shall be level with surrounding grade. Top of foundation for Type P, R and S cabinets shall be 90 mm above surrounding grade.
8. The steel pedestal, base plate, bolt circle and foundation for Type G cabinet shall be the same as that shown for a Type 1-C Standard. Pedestal shall be 640 mm - 760 mm in length. Anchor bolts shall be 19 mm ø x 460 mm with a 50 mm - 90° bend. Four bolts required per cabinet.
9. Type G cabinet shall be provided with a slipfitter to permit mounting an 114 mm outside diameter pedestal. Slipfitter shall be bolted to bottom of the cabinet.
10. Type G cabinet shall be provided with 8 screened, raintight holes, 13 mm diameter or larger, in the bottom of the cabinet.
11. A 25 mm drain shall be provided through the foundation of a Type M or Model 336 cabinet. Drain pipe shall be screened.
12. See Table for cabinet and foundation dimensions; "D" = Depth, "H" = Height and "W" = Width.
13. Cabinet shelves shall be adjustable for vertical spacing and shall be removable. Type M, P, R and S cabinets shall be provided with a minimum of two shelves.
14. Anchor bolts for Type M, P, R, S and Model 336 cabinets shall be 19 mm ø x 460 mm with a 50 mm - 90° bend.
15. An approved mastic or caulking compound shall be placed on the foundation prior to placing the cabinet to seal openings between bottom of cabinet and foundation.
16. Controller units, plug-mounted equipment, shelf-mounted equipment and wall-mounted equipment shall be located to permit safe and easy removal or replacement without removing any other piece of equipment.
17. Cabinet fan may be installed at an alternate location near the top of the cabinet when approved by the Engineer.
18. Where telephone interconnect is required, a minimum of 130 mm clear vertical space shall be provided inside the cabinet for the equipment.
19. Telephone interconnect conductors shall be enclosed in a 21C or larger conduit through the foundation. Type 4 metal conduit shall be used to separate telephone and power conductors in cabinets and pedestals.
20. For Model 332, 334 and 336 cabinet details, see "Traffic signal controller equipment specifications".

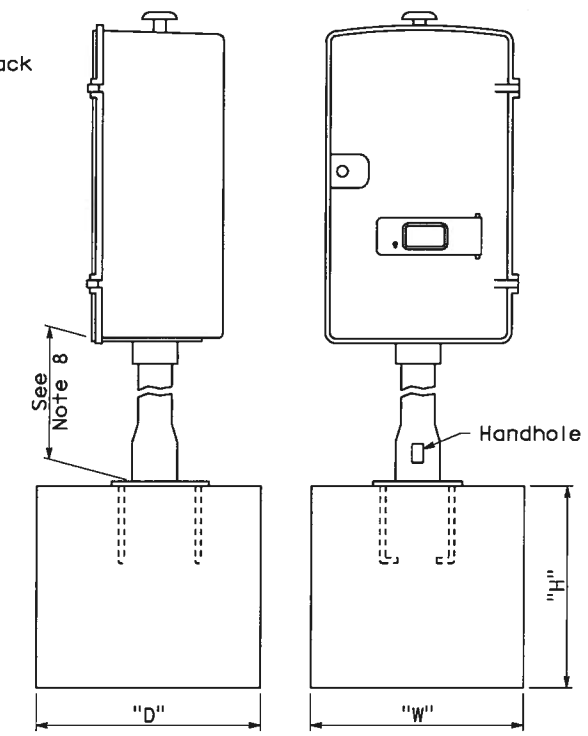

FOUNDATION FOR TYPE G CABINET

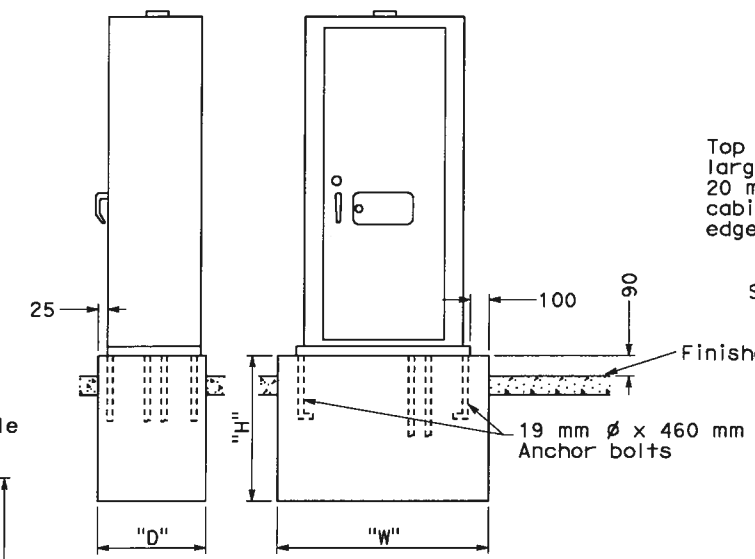

FOUNDATION FOR TYPE P, R AND S CABINETS

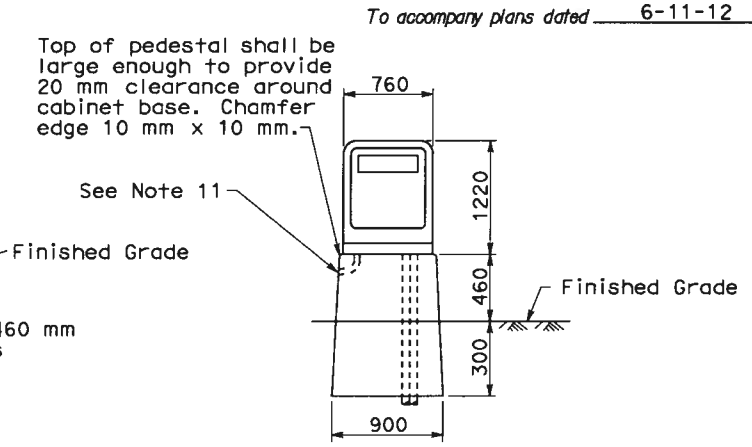

PEDESTAL FOUNDATION FOR TYPE M OR MODEL 336 CABINET

CABINET	FOUNDATION		
TYPE/ MODEL	H (mm)	W (mm)	D (mm)
G	900	600	600
M 336	760	900	560
P	460	1330	710
R	460	1330	710
S	460	1820	710

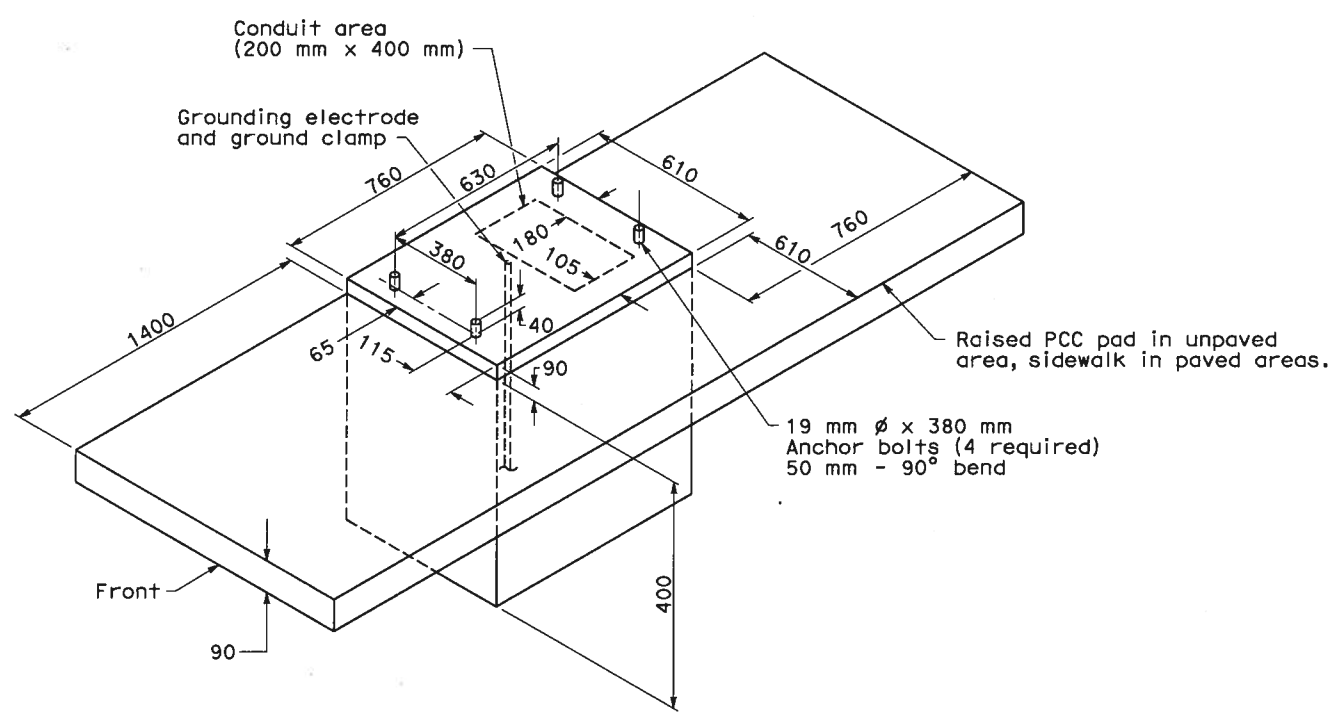

FOUNDATION DETAILS
For Model 332 and 334 cabinets

STATE OF CALIFORNIA
DEPARTMENT OF TRANSPORTATION

ELECTRICAL SYSTEMS (CONTROLLER CABINET DETAILS)

NO SCALE

ALL DIMENSIONS ARE IN MILLIMETERS UNLESS OTHERWISE SHOWN

RSP ES-3C DATED OCTOBER 5, 2007 SUPERSEDES STANDARD PLAN ES-3C DATED JULY 1, 2004-PAGE 425 OF THE STANDARD PLANS BOOK DATED JULY 2004.

REVISED STANDARD PLAN RSP ES-3C

2004 REVISED Std PLAN RSP ES-3C

6-27-07

DIST	COUNTY	ROUTE	POST MILES TOTAL PROJECT	SHEET NO.	TOTAL SHEETS
04	CC	4,242	R13.9/23.2, 0.0/3.4	32	40

REGISTERED ELECTRICAL ENGINEER

June 6, 2008
PLANS APPROVAL DATE

REGISTERED PROFESSIONAL ENGINEER Jeffery G. McRae No. E14512 Exp. 6-30-10 ELECTRICAL STATE OF CALIFORNIA

The State of California or its officers or agents shall not be responsible for the accuracy or completeness of electronic copies of this plan sheet.

To accompany plans dated 6-11-12

VISORS

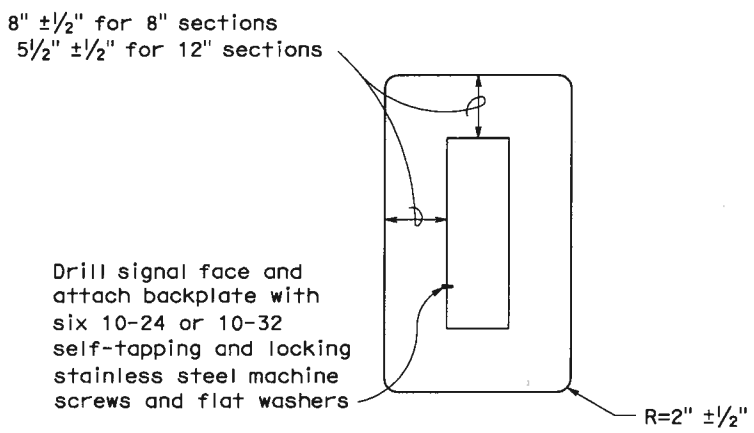

8" AND 12" SECTIONS

BACKPLATE

1/16" minimum thickness
3001-14 aluminum, or plastic when specified

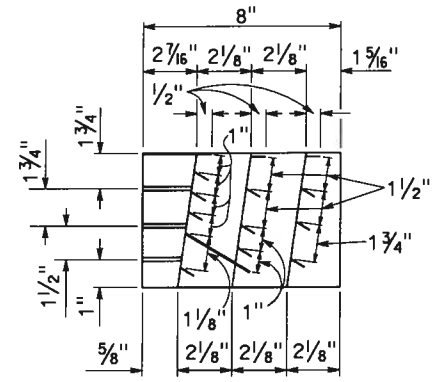

SECTION A-A

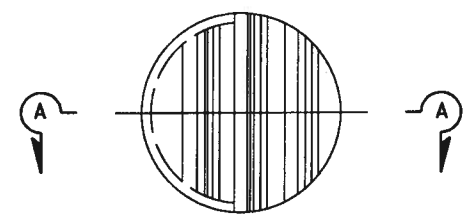

FRONT VIEW

DIRECTIONAL LOUVER

Directional louvers shall be oriented as directed by the Engineer and secured in place with one plated brass machine screw and nut.

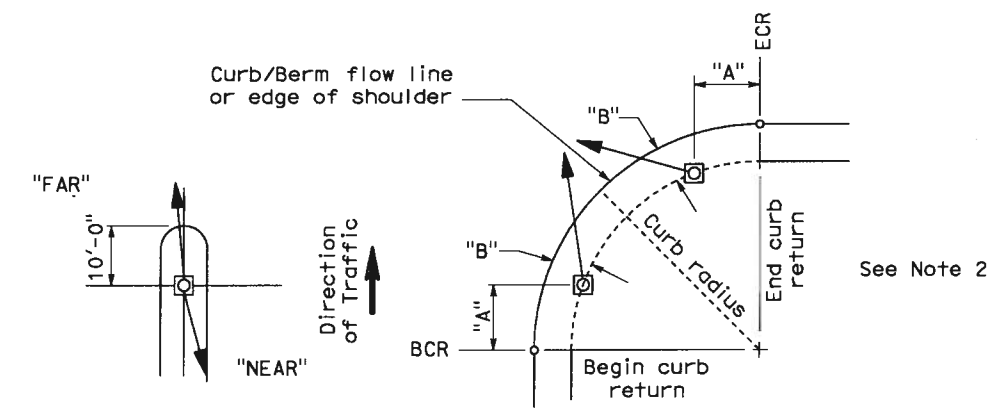

NOTES:

1. Typical signal pole placement unless dimensioned on plans.
2. For "A" and "B" dimensions, see Pole Schedule, or as directed by the Engineer.

SIGNAL STANDARD PLACEMENT DIMENSIONS AND EQUIPMENT LOCATIONS

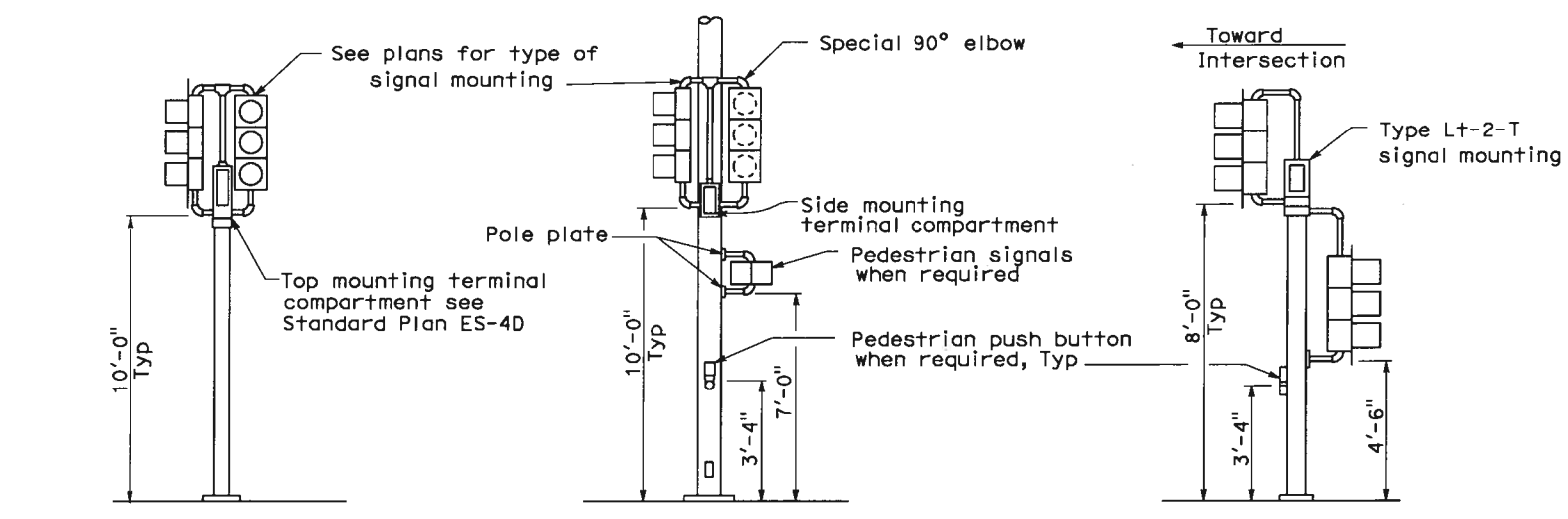

TOP MOUNTED SIGNALS (TV)

Type 1-A, 1-B, 1-C and 1-D standard as indicated on the plans

SIDE MOUNTED SIGNALS (SV AND SP)

Normally used on standards with luminaire or signal mast arm

LEFT TURN LANE SIGNAL

Type 1-A, 1-B, 1-C and 1-D standard as indicated on plans

TYPICAL SIGNAL INSTALLATIONS

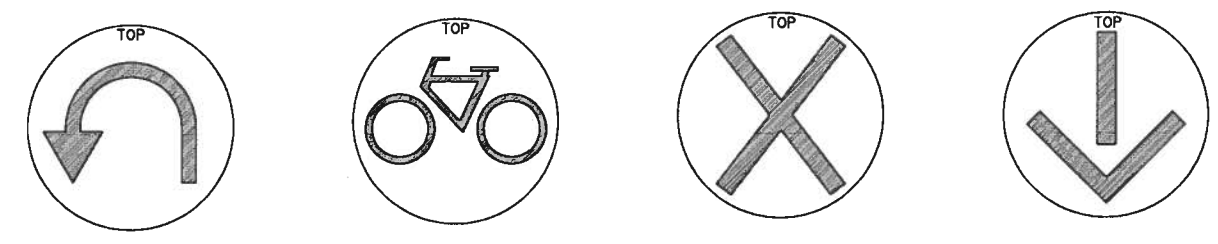

U-TURN SIGNAL FACE | BICYCLE SIGNAL FACE | LANE CONTROL SIGNAL FACE | LANE CONTROL SIGNAL FACE

STATE OF CALIFORNIA
DEPARTMENT OF TRANSPORTATION

ELECTRICAL SYSTEMS (SIGNAL HEADS AND MOUNTINGS)

NO SCALE

RSP ES-4C DATED JUNE 6, 2008 SUPERSEDES STANDARD PLAN ES-4C DATED MAY 1, 2006 - PAGE 420 OF THE STANDARD PLANS BOOK DATED MAY 2006.

REVISED STANDARD PLAN RSP ES-4C

2006 REVISED STANDARD PLAN RSP ES-4C

5-19-08

DIST	COUNTY	ROUTE	POST MILES TOTAL PROJECT	SHEET NO.	TOTAL SHEETS
04	CC	4,242	R13.9/23.2, 0.0/3.4	33	40

REGISTERED ELECTRICAL ENGINEER

June 6, 2008
PLANS APPROVAL DATE

The State of California or its officers or agents shall not be responsible for the accuracy or completeness of electronic copies of this plan sheet.

REGISTERED PROFESSIONAL ENGINEER Jeffery G. McRae No. E14512 Exp. 6-30-10 ELECTRICAL STATE OF CALIFORNIA

To accompany plans dated 6-11-12

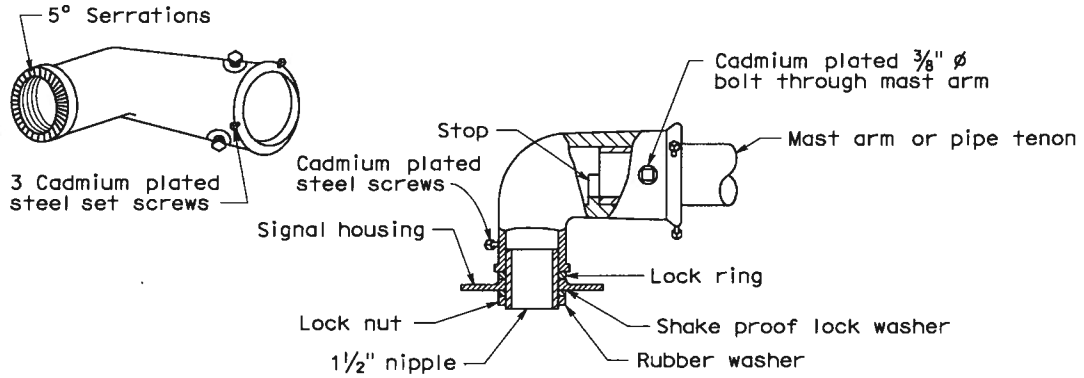

MAST ARM MOUNTING - TYPE "MAT"

For 2 NPS pipe, see Note 1.

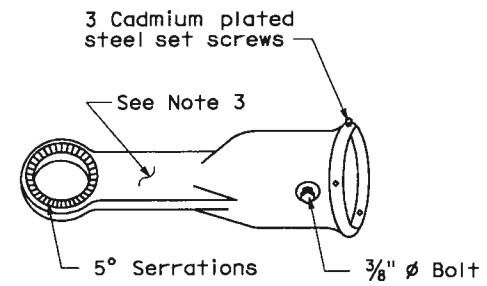

MAST ARM MOUNTING - TYPE "MAS"

For 2 NPS pipe. See Note 1.

SIGNAL SLIP FITTERS

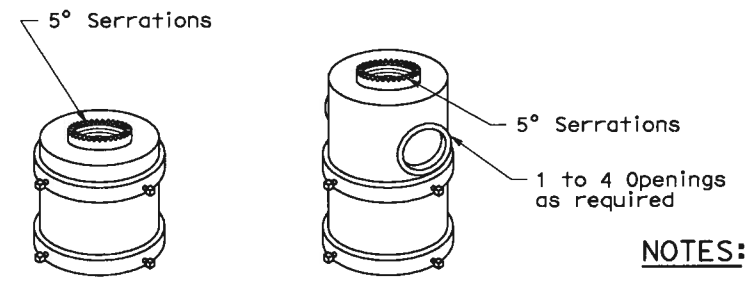

For one mounting For multiple mountings

TOP MOUNTINGS

For 4 NPS pipe, see Note 2.

NOTES:

1. After mast arm signal has been plumbed and secured, drill 7/16" hole through mast arm tenon in line with slip fitter hole. Place a cadmium plated 3/8" ø galvanized bolt with washer under bolt head through hole and secure with washer, nut, and locknut. Seal openings between mast arm mountings and mast arm with mastic.
2. (a) Threaded top mounted slip fitter openings shall be 1½ NPS.
   (b) Serrations in fittings shall match those on bottom of signal heads or in lock ring.
   (c) Top opening shall be offset when backplate is used.
3. Wireway shall have a cross section area of 0.95 square inch minimum. Minimum width of ½".

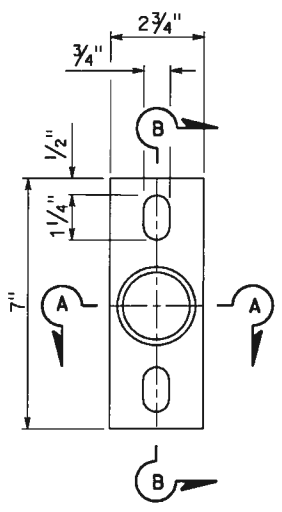

POLE PLATE

For side mountings

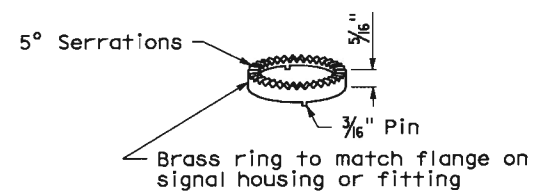

LOCK RING

Use where locking ring is not integral with signal housing or fitting.

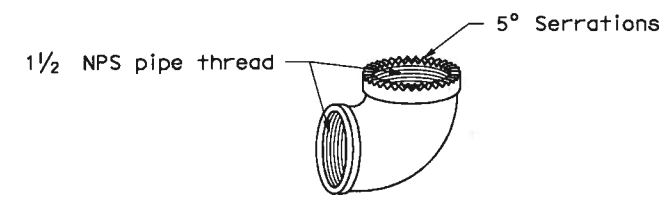

SPECIAL 90° ELBOW

One for each signal head, except those with special slip fitter mounting

MISCELLANEOUS MOUNTING HARDWARE

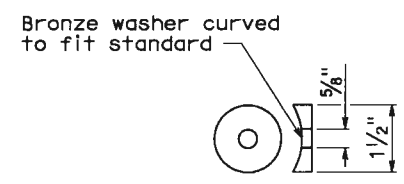

DETAIL "C"

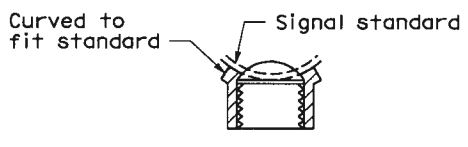

SECTION A-A

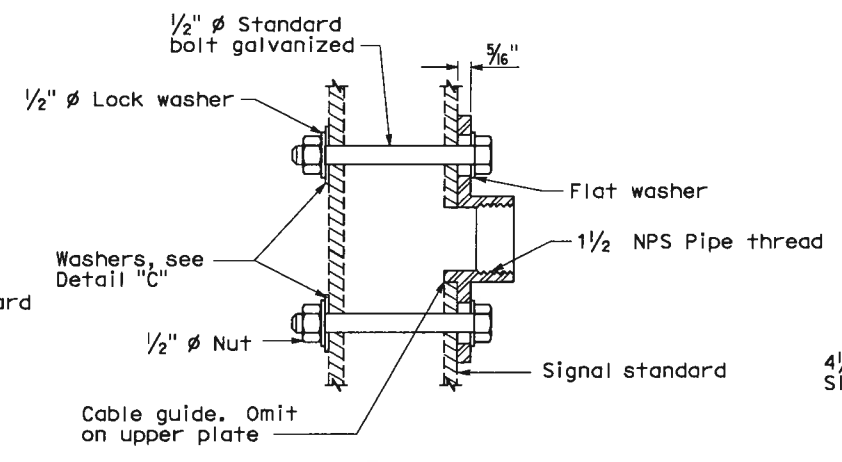

SECTION B-B

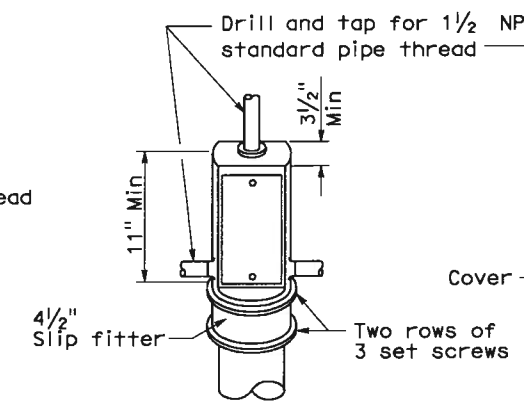

TOP MOUNTING

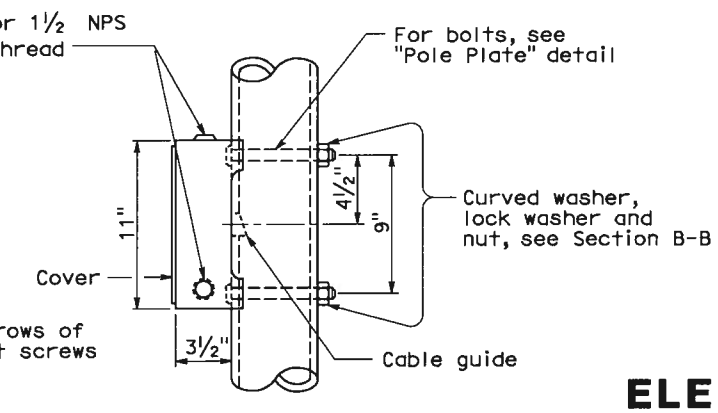

SIDE MOUNTING

TERMINAL COMPARTMENTS

STATE OF CALIFORNIA
DEPARTMENT OF TRANSPORTATION

ELECTRICAL SYSTEMS (SIGNAL HEADS AND MOUNTINGS)

NO SCALE

RSP ES-4D DATED June 6, 2008 SUPERSEDES STANDARD PLAN ES-4D
DATED MAY 1, 2006 - PAGE 421 OF THE STANDARD PLANS BOOK DATED MAY 2006.

REVISED STANDARD PLAN RSP ES-4D

2006 REVISED STANDARD PLAN RSP ES-4D

5-19-08

DIST	COUNTY	ROUTE	POST MILES TOTAL PROJECT	SHEET NO.	TOTAL SHEETS
04	CC	4,242	R13.9/23.2, 0.0/3.4	34	40

REGISTERED CIVIL ENGINEER

October 5, 2007
PLANS APPROVAL DATE

REGISTERED PROFESSIONAL ENGINEER Stanley P. Johnson No. C57793 Exp. 3-31-08 CIVIL STATE OF CALIFORNIA

The State of California or its officers or agents shall not be responsible for the accuracy or completeness of electronic copies of this plan sheet.

To accompany plans dated 6-11-12

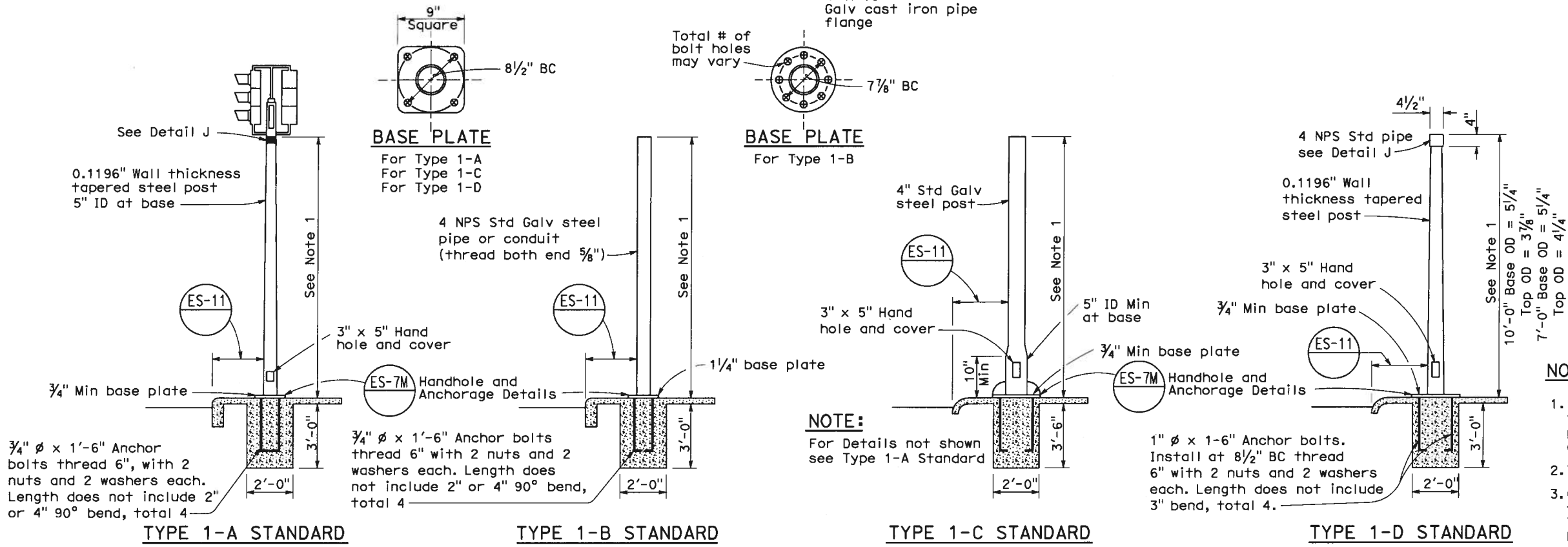

TYPE 1 SIGNAL STANDARDS

NOTES:

1. Standards shall be 10'-0" ± 2" for vehicle signals and 7'-0" ± 2" for pedestrian signals unless otherwise noted on plans.
2. Top of standards shall be 4½" OD.
3. Conduits shall extend 2" maximum above finished surface of foundation and for Types 1-A, 1-C and 1-D shall be sloped toward handhole.
4. Anchor bolts shall be bonded to conduit or grounding conductor.
5. Conduit between standard and adjacent pull box shall be 2" minimum.
6. Paint numbers on roadway side facing traffic when electrolier or post is left of direction of traffic.

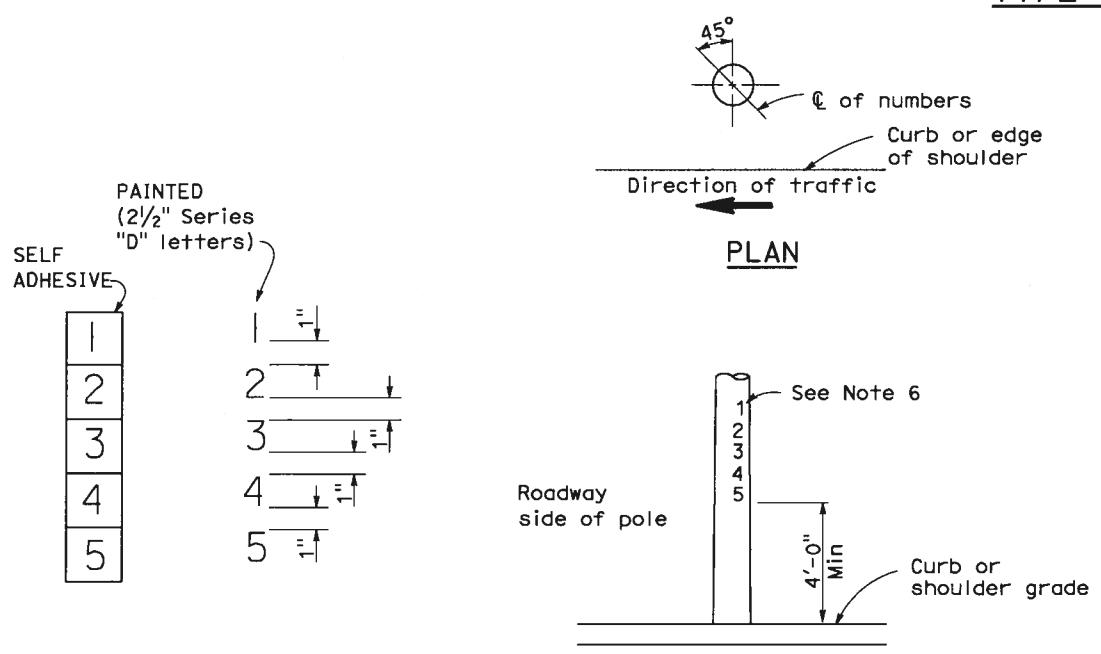

NUMBER DETAIL

TYPICAL NUMBER FORMAT

LOCATION OF EQUIPMENT NUMBERS ON STANDARDS AND POSTS

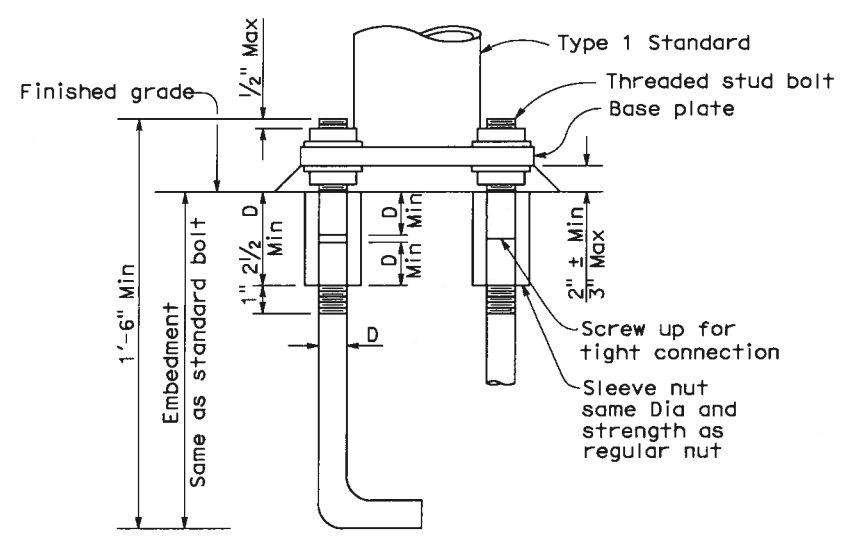

ANCHOR BOLTS WITH SLEEVE NUTS

Sleeve nuts to be used only when shown or specified on Project Plans

D = Diameter of anchor bolt

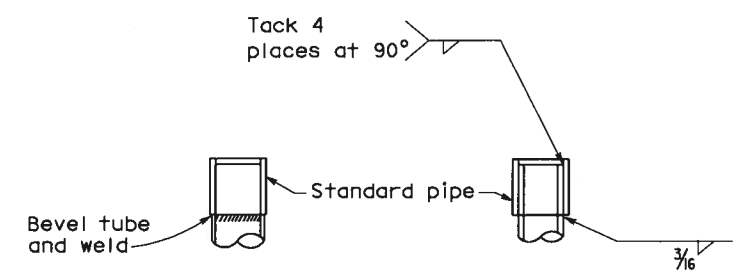

DETAIL J

Tube may be inserted into pipe or butted as required

STATE OF CALIFORNIA
DEPARTMENT OF TRANSPORTATION

ELECTRICAL SYSTEMS (SIGNAL AND LIGHTING STANDARD TYPE 1 STANDARD AND EQUIPMENT NUMBERING)

NO SCALE

RSP ES-7B DATED OCTOBER 5, 2007 SUPERCEDES STANDARD PLAN ES-7B DATED MAY 1, 2006 - PAGE 438 OF THE STANDARD PLANS BOOK DATED MAY 2006.

REVISED STANDARD PLAN RSP ES-7B

2006 REVISED STANDARD PLAN RSP ES-7B

7-10-07

DIST	COUNTY	ROUTE	KILOMETER POST TOTAL PROJECT	SHEET NO.	TOTAL SHEETS
04	CC	4,242	R13.9/23.2, 0.0/3.4	35	40

REGISTERED CIVIL ENGINEER

October 5, 2007
PLANS APPROVAL DATE

REGISTERED PROFESSIONAL ENGINEER
Stanley P. Johnson
No. C57793
Exp. 03-31-08
CIVIL
STATE OF CALIFORNIA

The State of California or its officers or agents shall not be responsible for the accuracy or completeness of electronic copies of this plan sheet.

To get to the Caltrans web site, go to: http://www.dot.ca.gov

To accompany plans dated 6-11-12

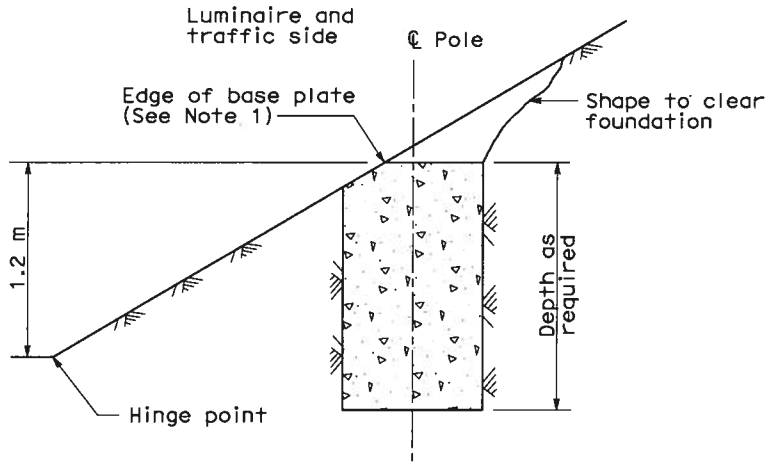

CUT SLOPES
STEEPER THAN 1:4
See Note 2

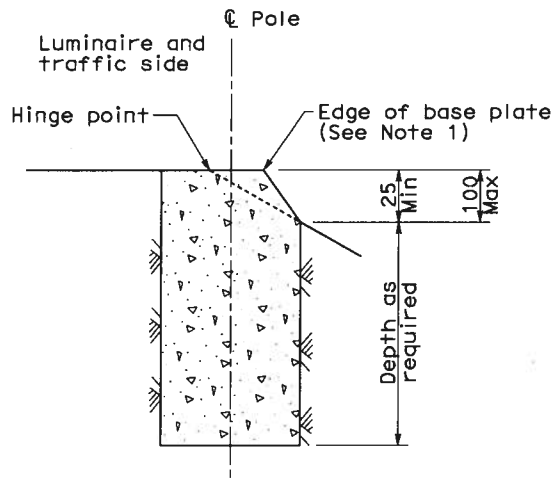

FILL SLOPES
STEEPER THAN 1:4
See Note 2

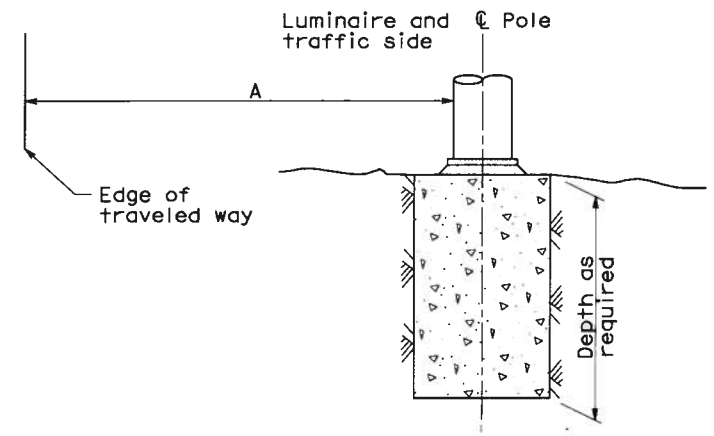

FLAT SECTIONS, CUT OR FILL SLOPES
1:4 OR FLATTER

STANDARD TYPE	SETBACK (DIMENSION A)
32	9 m Min
31, 36-20A	6 m Min
15, 15D, 15-SB, 21, 21D, 30	Mast Arm Length (Min)

FOUNDATIONS ADJACENT TO ALL ROADWAYS EXCEPT IN SIDEWALK, MEDIAN AND ISLAND AREAS

NOTES:

1. Where a portion of the foundation is above grade, the top edges shall have a 25 mm chamfer.
2. Horizontal setbacks on cut and fill slopes steeper than 1:4 shall not exceed the distance shown for flat sections.

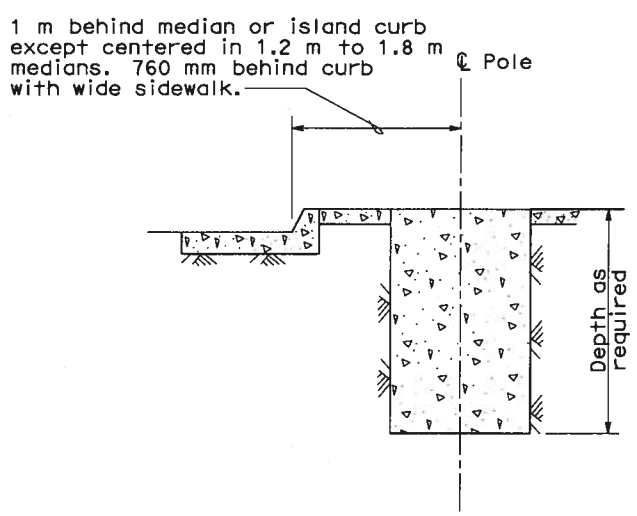

MEDIAN, ISLAND
OR WIDE SIDEWALK
(2 m wide and wider)

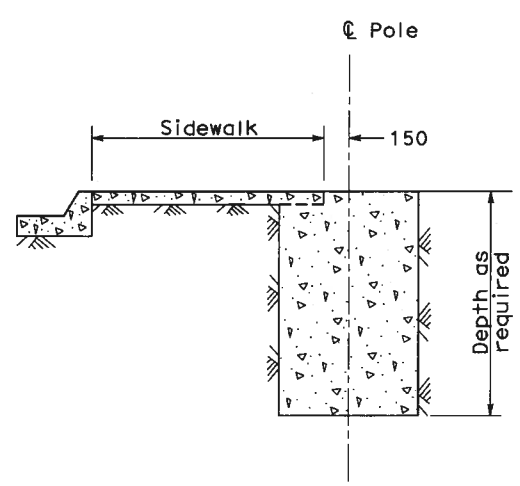

NARROW SIDEWALK
(Less than 2 m wide)

FOUNDATIONS IN SIDEWALK, MEDIAN AND ISLAND AREAS

STATE OF CALIFORNIA
DEPARTMENT OF TRANSPORTATION

ELECTRICAL SYSTEMS (FOUNDATION INSTALLATIONS)

NO SCALE

ALL DIMENSIONS ARE IN MILLIMETERS UNLESS OTHERWISE SHOWN

RSP ES-11 DATED OCTOBER 5, 2007 SUPERSEDES STANDARD PLAN ES-11 DATED JULY 1, 2004-PAGE 475 OF THE STANDARD PLANS BOOK DATED JULY 2004.

REVISED STANDARD PLAN RSP ES-11

2004 REVISED Std PLAN RSP ES-11

10-1-07

DIST	COUNTY	ROUTE	KILOMETER POST TOTAL PROJECT	SHEET NO.	TOTAL SHEETS
04	CC	4,242	R13.9/23.2, 0.0/3.4	36	40

Caltrans Metric

Jeffery G. McRae
REGISTERED ELECTRICAL ENGINEER

October 5, 2007
PLANS APPROVAL DATE

REGISTERED PROFESSIONAL ENGINEER Jeffery G. McRae No. E14512 Exp. 6-30-08 ELECTRICAL STATE OF CALIFORNIA

The State of California or its officers or agents shall not be responsible for the accuracy or completeness of electronic copies of this plan sheet.

To get to the Caltrans web site, go to: http://www.dot.ca.gov

To accompany plans dated 6-11-12

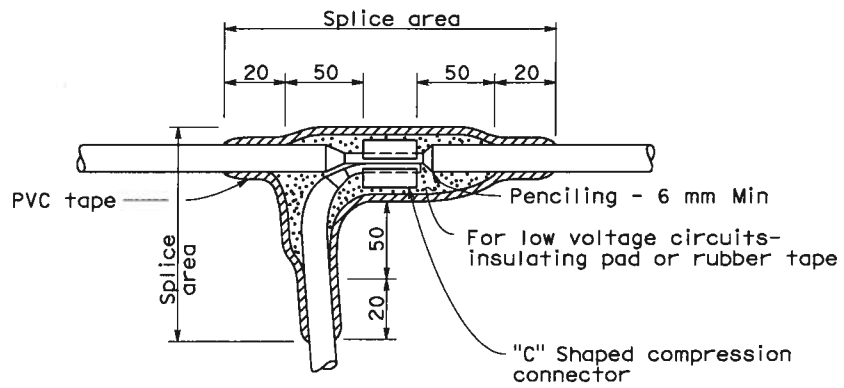

TYPE "C" SPLICE

Between 1 free-end and 1 through conductor

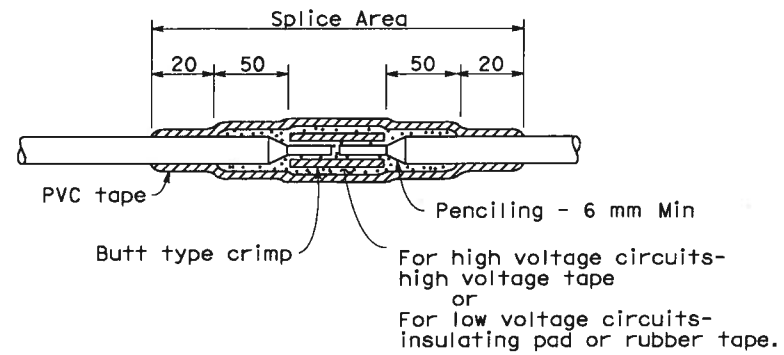

TYPE "S" SPLICE

Between 2 free-ends

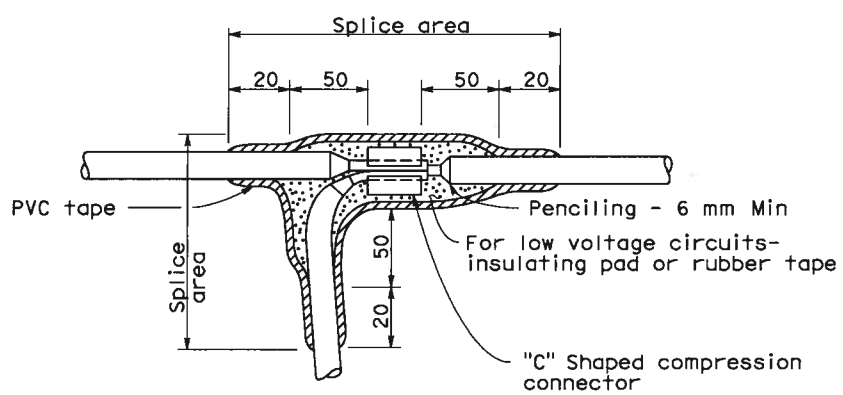

TYPE "T" SPLICE

For 3 free-ends

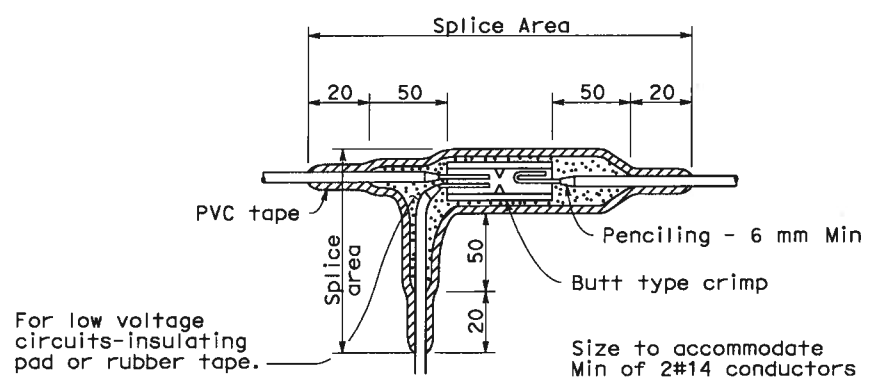

TYPE "ST" SPLICE

NOTES:

1. Dimensions are minimum.
2. Rubber tapes shall be rolled after application.

INSULATION METHODS

Low Voltage Circuits (0-600 V)

METHOD "B"

1. Completely cover the splice area with electrical insulating coating and allow to dry.
2. Apply 2 layers of electrical insulating pad with minimum thickness of 4 mm each layer or 2 layers, half lapped, synthetic oil resistant, self fusing rubber tape.
3. Apply 3 layers half lapped polyvinyl chloride tape.
4. Cover entire splice with electrical insulating coating and allow to dry.

High Voltage Circuits (Over 600 V)

1. Completely cover the splice area with electrical insulating coating and allow to dry.
2. Apply high voltage tape to a minimum thickness equal to original insulation.
3. Apply 3 layers half lapped polyvinyl chloride tape.
4. Cover entire splice with electrical insulating coating and allow to dry.

STATE OF CALIFORNIA
DEPARTMENT OF TRANSPORTATION

ELECTRICAL SYSTEMS (SPLICING DETAILS)

NO SCALE

ALL DIMENSIONS ARE IN MILLIMETERS UNLESS OTHERWISE SHOWN

RSP ES-13A DATED OCTOBER 5, 2007 SUPERSEDES STANDARD PLAN ES-13A DATED JULY 1, 2004-PAGE 478 OF THE STANDARD PLANS BOOK DATED JULY 2004.

REVISED STANDARD PLAN RSP ES-13A

2004 REVISED Std PLAN RSP ES-13A

6-27-07

DIST	COUNTY	ROUTE	POST MILES TOTAL PROJECT	SHEET NO.	TOTAL SHEETS
04	CC	4,242	R13.9/23.2, 0.0/3.4	37	40

REGISTERED ELECTRICAL ENGINEER

May 1, 2006
PLANS APPROVAL DATE

REGISTERED PROFESSIONAL ENGINEER Jeffery G. McRae No. E14512 Exp. 6-30-06 ELECTRICAL STATE OF CALIFORNIA

The State of California or its officers or agents shall not be responsible for the accuracy or completeness of electronic copies of this plan sheet.

To get to the Caltrans web site, go to: http://www.dot.ca.gov

6-11-12

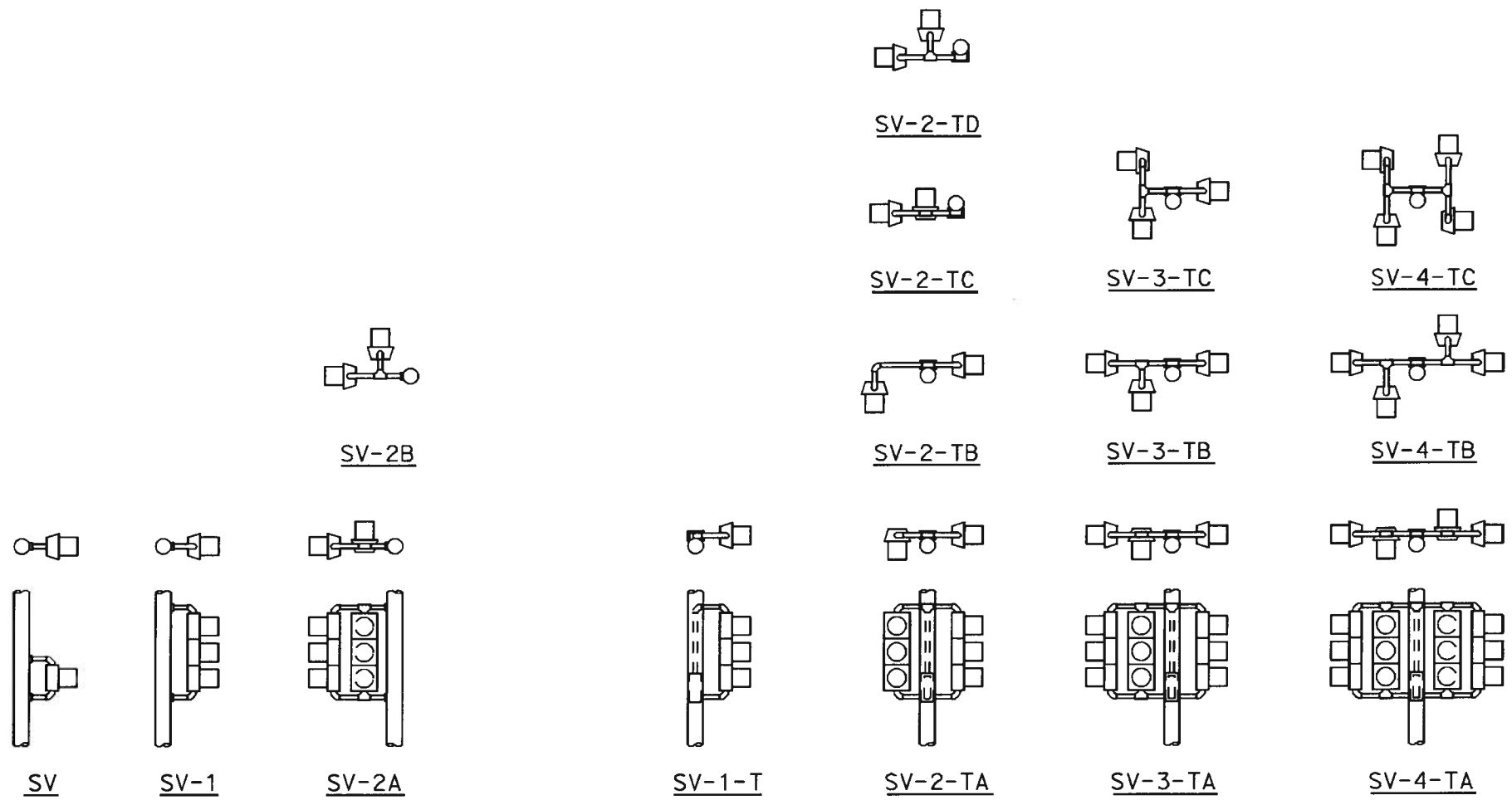

SIDE MOUNTINGS

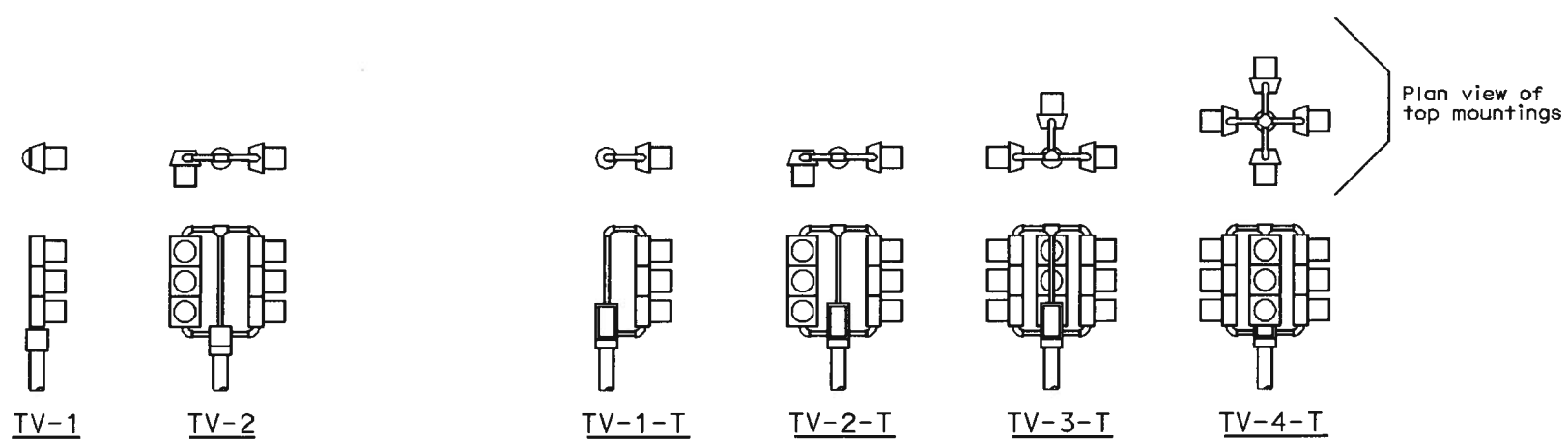

TOP MOUNTINGS

VEHICULAR SIGNALS AND MOUNTINGS

ABBREVIATIONS

TV	Top mounted vehicle signals
SV	Side mounted vehicle signals
T	Terminal compartment
1, 2, 3, 4	Number of signal faces (3 - section, unless otherwise indicated)
A, B, C, D	Configuration of signals

NOTES:

1. Mountings shall be oriented to provide maximum horizontal clearance to adjacent roadway.
2. Bracket arms shall be long enough to permit proper alignment of signals and backplate installation.
3. See Standard Plans ES-4D and ES-4E for attachment fitting details.

STATE OF CALIFORNIA
DEPARTMENT OF TRANSPORTATION

ELECTRICAL SYSTEMS (SIGNAL HEADS AND MOUNTINGS)

NO SCALE

ES-4A

2006 STANDARD PLAN ES-4A

418

8-29-05

DIST	COUNTY	ROUTE	POST MILES TOTAL PROJECT	SHEET NO.	TOTAL SHEETS
04	CC	4,242	R13.9/23.2, 0.0/3.4	38	40

REGISTERED ELECTRICAL ENGINEER

May 1, 2006
PLANS APPROVAL DATE

REGISTERED PROFESSIONAL ENGINEER
Jeffery G. McRae
No. E14512
Exp. 6-30-06
ELECTRICAL
STATE OF CALIFORNIA

The State of California or its officers or agents shall not be responsible for the accuracy or completeness of electronic copies of this plan sheet.

To get to the Caltrans web site, go to: http://www.dot.ca.gov

6-11-12

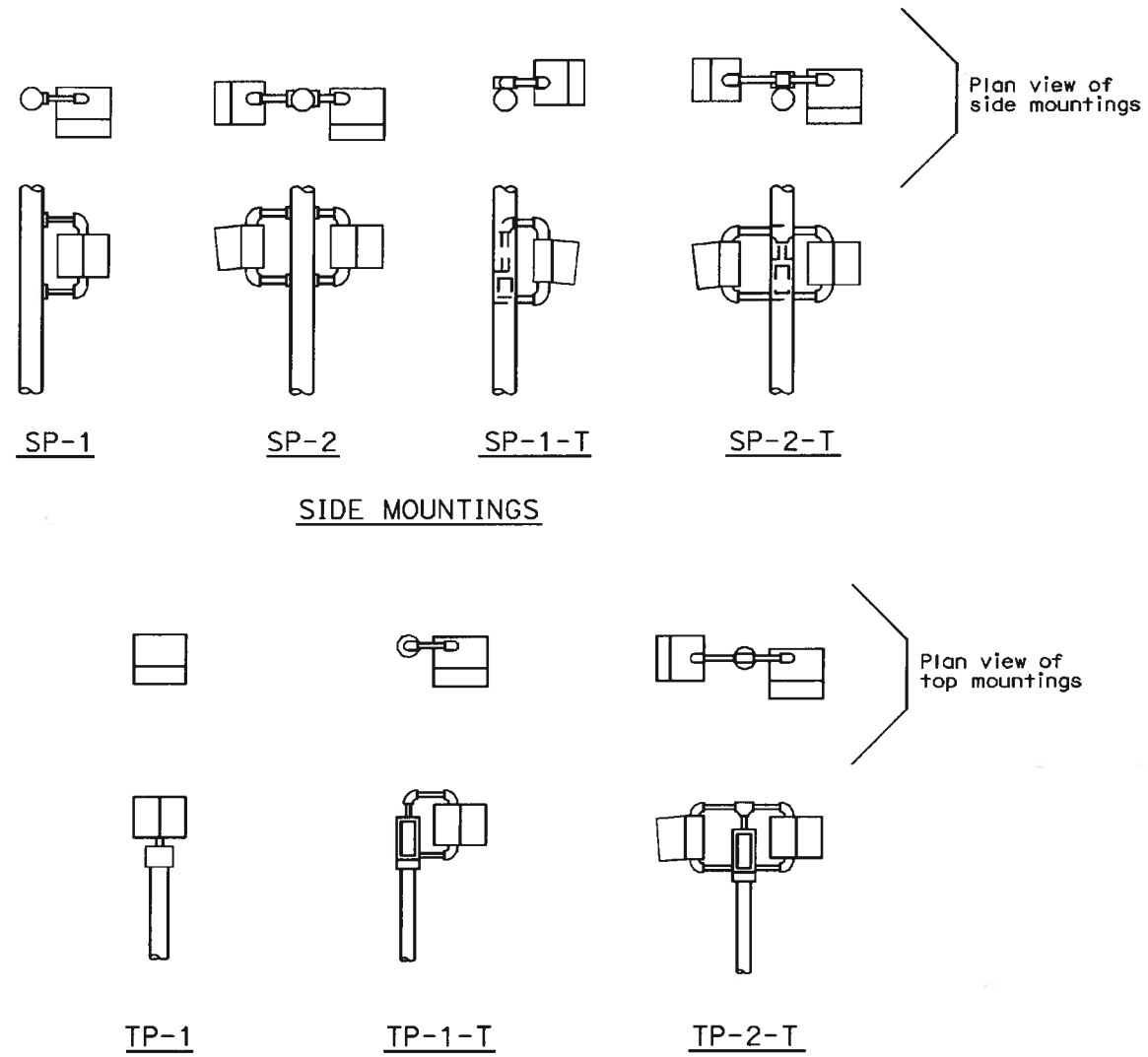

PEDESTRIAN SIGNALS AND MOUNTINGS

"METER ON" SIGN

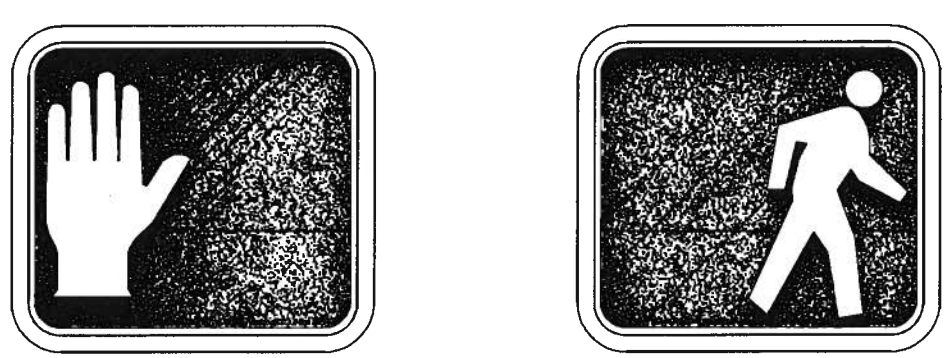

PEDESTRIAN SIGNAL FACE
SYMBOL TYPE

NOTES:

1. Mounting shall be oriented to provide maximum horizontal clearance to adjacent roadway.
2. Bracket arms shall be long enough to permit proper alignment of signals.
3. See Standard Plan ES-4D for attachment fittings details.

ABBREVIATIONS

TP	Top mounted pedestrian signal
SP	Side mounted pedestrian signal
T	Terminal compartment
1,2	Number of signal faces

STATE OF CALIFORNIA
DEPARTMENT OF TRANSPORTATION

ELECTRICAL SYSTEMS (SIGNAL HEADS AND MOUNTINGS)

NO SCALE

ES-4B

2006 STANDARD PLAN ES-4B

8-29-05

DIST	COUNTY	ROUTE	POST MILES TOTAL PROJECT	SHEET NO.	TOTAL SHEETS
04	CC	4,242	R13.9/23.2, 0.0/3.4	39	40

REGISTERED ELECTRICAL ENGINEER

May 1, 2006
PLANS APPROVAL DATE

REGISTERED PROFESSIONAL ENGINEER Jeffery G. McRae No. E14512 Exp. 6-30-06 ELECTRICAL STATE OF CALIFORNIA

The State of California or its officers or agents shall not be responsible for the accuracy or completeness of electronic copies of this plan sheet.

To get to the Caltrans web site, go to: http://www.dot.ca.gov

6-11-12

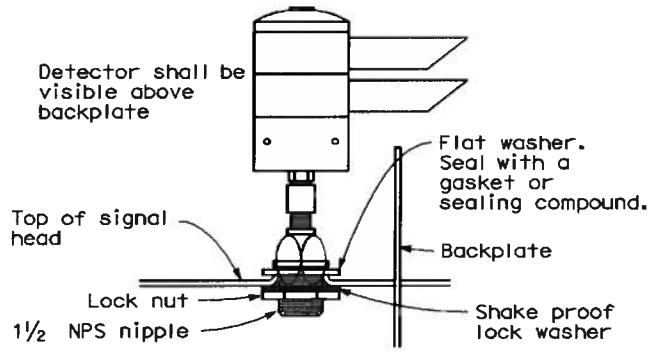

EMERGENCY VEHICLE DETECTOR MOUNTING

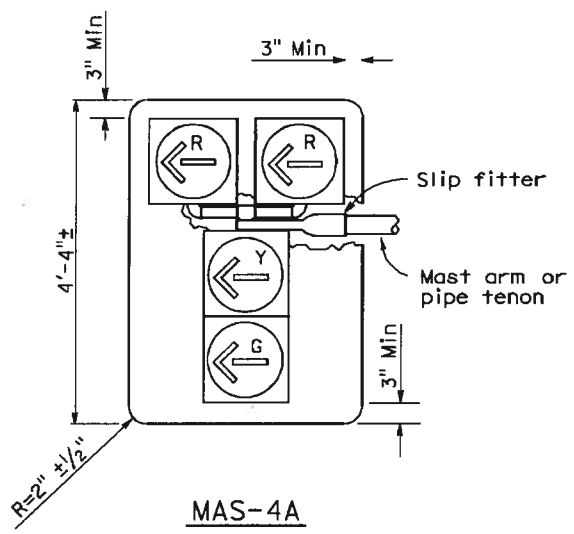

MAS-4A

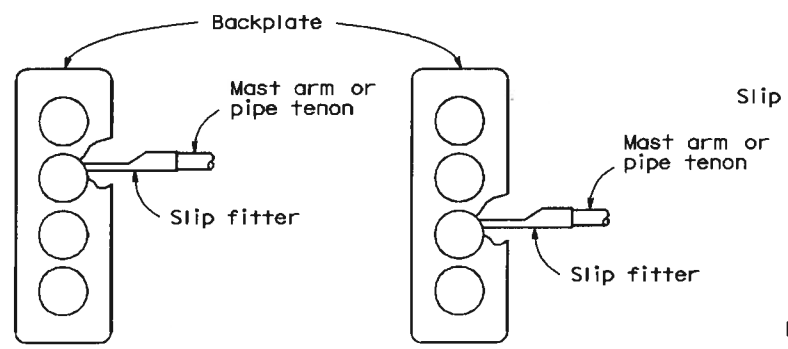

MAS-4B

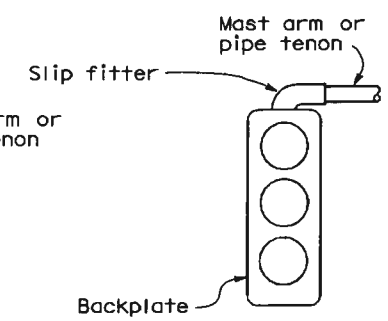

MAS-4C

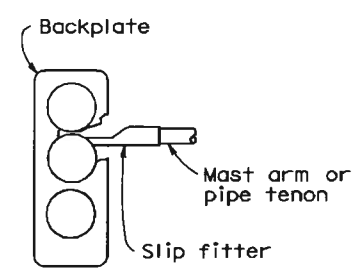

MAT

MAS

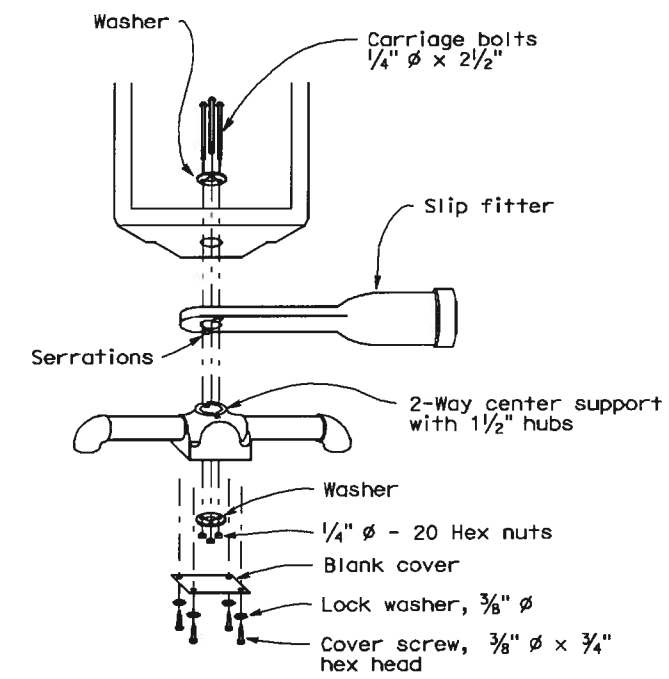

DETAIL A

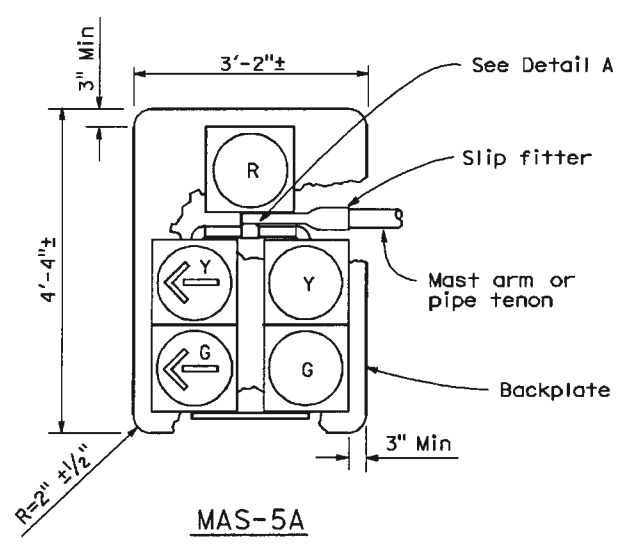

MAS-5A

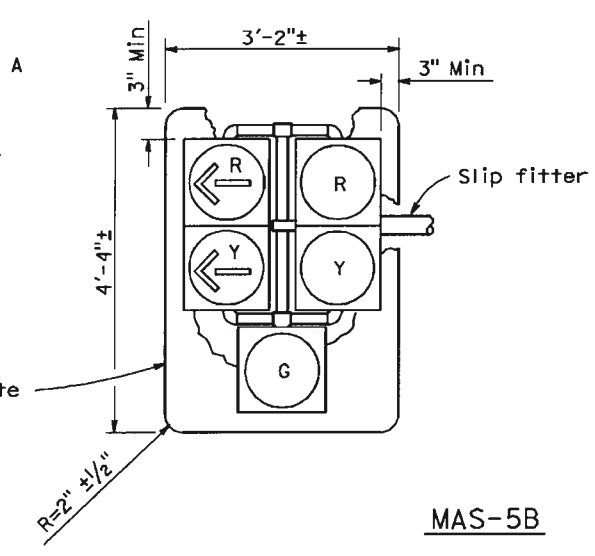

MAS-5B

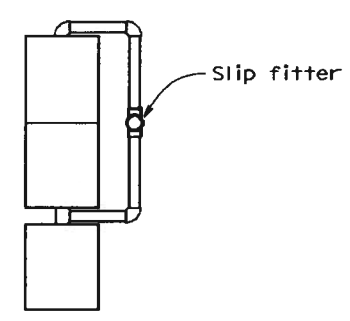

SIDE VIEW

MAST ARM MOUNTINGS

STATE OF CALIFORNIA
DEPARTMENT OF TRANSPORTATION

ELECTRICAL SYSTEMS (SIGNAL FACES AND MOUNTINGS)

NO SCALE

2006 STANDARD PLAN ES-4E

ES-4E

422

7-12-05

DIST	COUNTY	ROUTE	POST MILES TOTAL PROJECT	SHEET NO.	TOTAL SHEETS
04	CC	4,242	R13.9/23.2, 0.0/3.4	40	40

REGISTERED CIVIL ENGINEER

May 1, 2006
PLANS APPROVAL DATE

REGISTERED PROFESSIONAL ENGINEER Jeffrey B. Woody No. C41260 Exp. 3-31-07 CIVIL STATE OF CALIFORNIA

The State of California or its officers or agents shall not be responsible for the accuracy or completeness of electronic copies of this plan sheet.

To get to the Caltrans web site, go to: http://www.dot.ca.gov

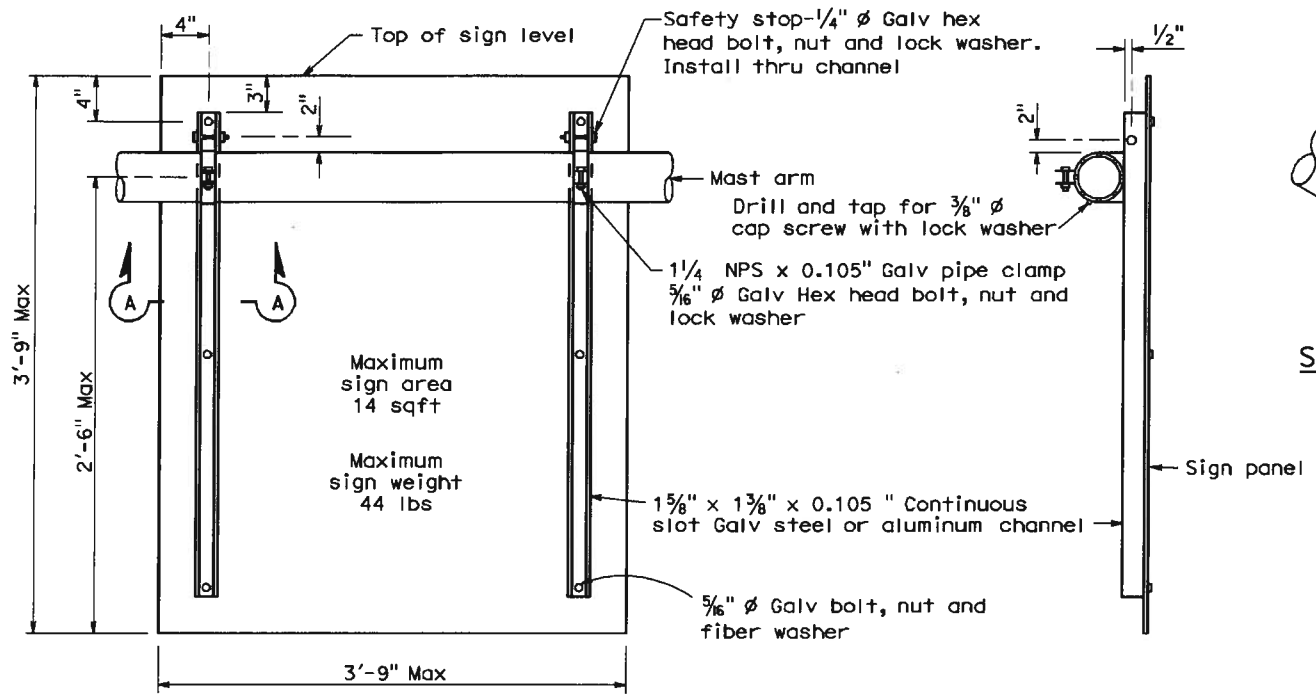

REAR VIEW

SIDE VIEW

DETAIL U

SIGN MOUNTING DETAILS

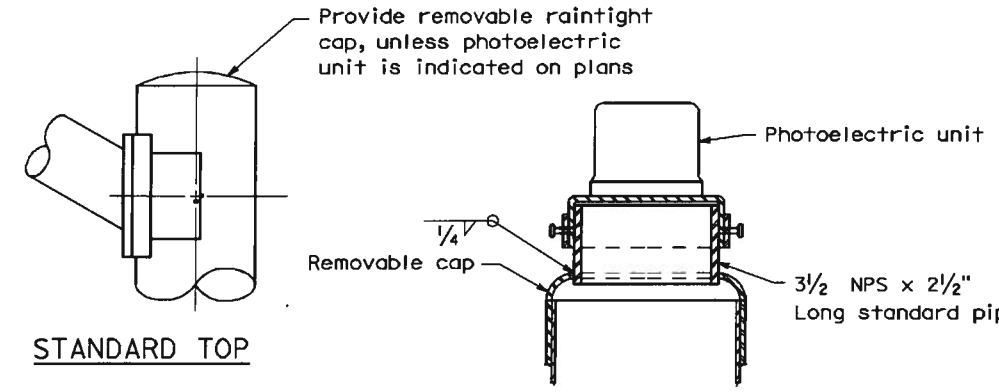

STANDARD TOP

MOUNTING ADAPTER FOR PHOTOELECTRIC UNIT

POLE TOP DETAILS

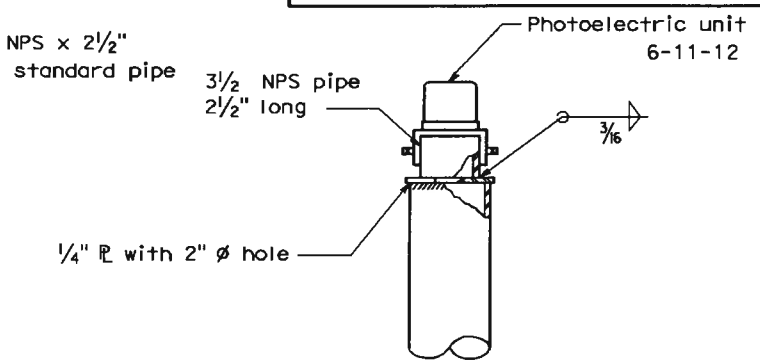

ALTERNATIVE MOUNTING ADAPTER

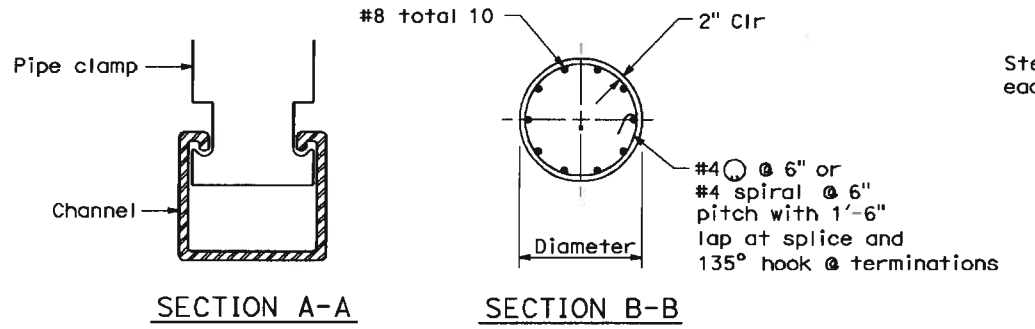

SECTION A-A

SECTION B-B

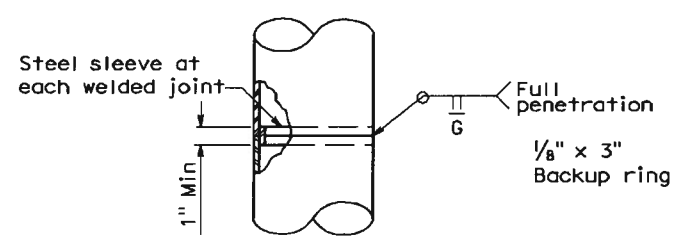

FOR UNIFORM TUBE THICKNESS

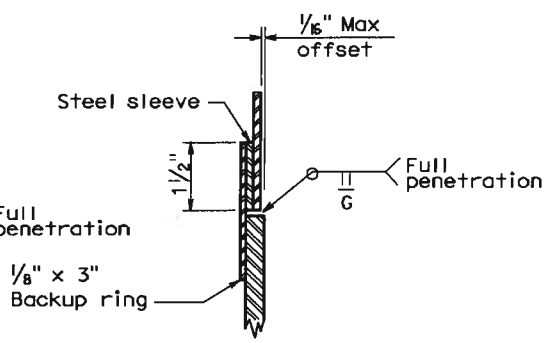

DETAIL T

AT TUBE THICKNESS CHANGE

POLE SPLICES

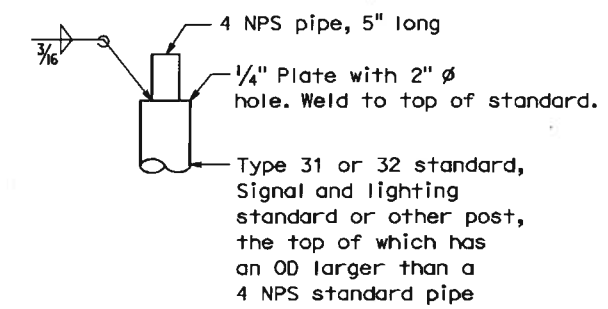

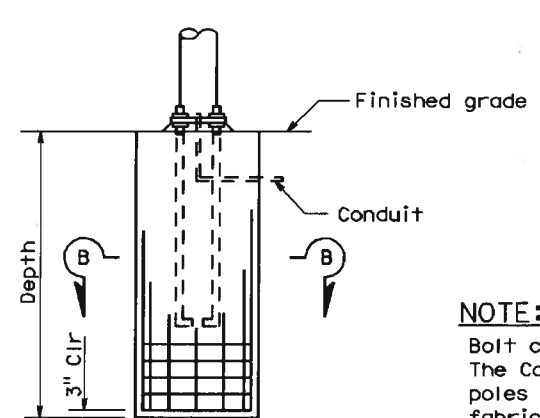

ELEVATION

CAST-IN-DRILLED HOLE PILE FOUNDATION

Reinforced Pile

NOTE:
Bolt circles and anchor bolt sizes have been revised. The Contractor shall verify dependent dimensions for poles to be installed on existing foundations before fabricating the poles.

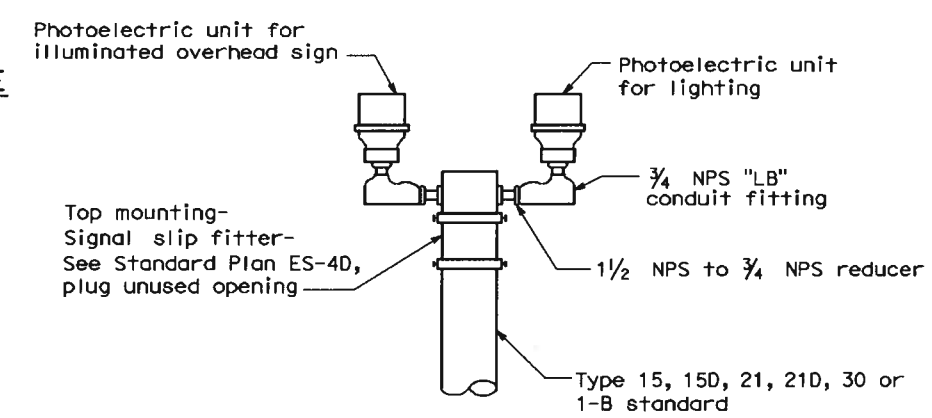

DUAL PHOTOELECTRIC UNIT MOUNTING DETAIL

STATE OF CALIFORNIA
DEPARTMENT OF TRANSPORTATION

ELECTRICAL SYSTEMS (SIGNAL AND LIGHTING STANDARDS DETAILS No. 2)

NO SCALE

2006 STANDARD PLAN ES-7N

ES-7N

1-4-06

CONSTRUCTION AREA SIGNS

SIGN	CODE	PANEL SIZE	MESSAGE	NO OF POST AND SIZE	(EACH) QUANTITY	REMARKS
A	M4 - 8	24"x12"	DETOUR	1 - 4"X6"	6	
	G28-2(CA)(4)	24"x25"	ROUTE 4 SHIELD			
	M3-2	24"x12"	EAST			
	M6-1 (→)	21"x15"	RIGHT ARROW			
B	M4 - 8	24"x12"	DETOUR	1 - 4"X6"	13	
	G28-2(CA)(4)	24"x25"	ROUTE 4 SHIELD			
	M3-2	24"x12"	EAST			
	M6-1 (↑)	21"x15"	UP ARROW			
C	SC6-4(CA)	48" X 60"	RAMP CLOSED DATES TIME	1 - 4"X6"	10	
D	W20-2	48" X 48"	DETOUR AHEAD	1 - 4"X6"	13	
E	M4 - 8a	24" X 18"	END DETOUR	1 - 4"X4"	9	
F	M4 - 8	24"x12"	DETOUR	1 - 4"X6"	3	
	G28-2(CA)(4)	24"x25"	ROUTE 4 SHIELD			
	M3-2	24"x12"	EAST			
	M6-1 (←)	21"x15"	LEFT ARROW			
G	SPECIAL	42" X 54"	EAST ROUTE 4 RAMP CLOSED	1 - 4"X6"	1	
H	M4 - 8	24"x12"	DETOUR	1 - 4"X6"	6	
	G28-2(CA)(4)	24"x25"	ROUTE 4 SHIELD			
	M3-4	24"x12"	WEST			
	M6-3 (↑)	21"x15"	UP ARROW			
I	M4 - 8	24"x12"	DETOUR	1 - 4"X6"	3	
	G28-2(CA)(4)	24"x25"	ROUTE 4 SHIELD			
	M3-4	24"x12"	EAST			
	M6-1 (→)	21"x15"	RIGHT ARROW			

NOTE: EXACT LOCATION AND POSITION OF ROADSIDE SIGNS AND CONSTRUCTION AREA SIGNS TO BE DETERMINED BY THE ENGINEER.

SIGN	CODE	PANEL SIZE	MESSAGE	NO OF POST AND SIZE	(EACH) QUANTITY	REMARKS
J	M4 - 8	24"x12"	DETOUR	1 - 4"X6"	1	
	G28-2(CA)(4)	24"x25"	ROUTE 4 SHIELD			
	M3-4	24"x12"	EAST			
	M6-1 (↗)	21"x15"	UP RIGHT ARROW			
K	M4 - 8	24"x12"	DETOUR	1 - 4"X6"	5	
	G28-2(CA)(4)	24"x25"	ROUTE 4 SHIELD			
	M3-4	24"x12"	EAST			
	M6-1 (←)	21"x15"	LEFT ARROW			
L	M4 - 8	24"x12"	DETOUR	1 - 4"X6"	2	
	G28-2(CA)(242)	24"x25"	ROUTE 4 SHIELD			
	M3-3	24"x12"	SOUTH			
	M6-3 (↑)	21"x15"	UP ARROW			
M	M4 - 8	24"x12"	DETOUR	1 - 4"X6"	1	
	G28-2(CA)(242)	24"x25"	ROUTE 242 SHIELD			
	M3-3	24"x12"	SOUTH			
	M6-1 (→)	21"x15"	RIGHT ARROW			
N	M4 - 8	24"x12"	DETOUR	1 - 4"X6"	1	
	G28-2(CA)(242)	24"x25"	ROUTE 242 SHIELD			
	M3-3	24"x12"	SOUTH			
	M6-1 (←)	21"x15"	LEFT ARROW			
0	M4 - 8	24"x12"	DETOUR	1 - 4"X6"	1	
	G28-2(CA)(242)	24"x25"	ROUTE 242 SHIELD			
	M3-1	24"x12"	SOUTH			
	M6-1 (→)	21"x15"	RIGHT ARROW			
P	M4 - 8	24"x12"	DETOUR	1 - 4"X6"	2	
	G28-2(CA)(242)	24"x25"	ROUTE 242 SHIELD			
	M3-1	24"x12"	NORTH			
	M6-1 (←)	21"x15"	LEFT ARROW			
Q	M4 - 8	24"x12"	DETOUR	1 - 4"X6"	1	
	G28-2(CA)(242)	24"x25"	ROUTE 242 SHIELD			
	M3-1	24"x12"	NORTH			
	M6-3 (↑)	21"x15"	UP ARROW			
R	M4 - 8	24"x12"	DETOUR	1 - 4"X6"	1	
	G28-2(CA)(242)	24"x25"	ROUTE 242 SHIELD			
	M3-1	24"x12"	EAST			
	M6-2 (↗)	21"x15"	UP RIGHT ARROW			
S	SPECIAL	42" X 54"	NORTH RTE 242 RAMP CLOSED	1 - 4"X6"	1	

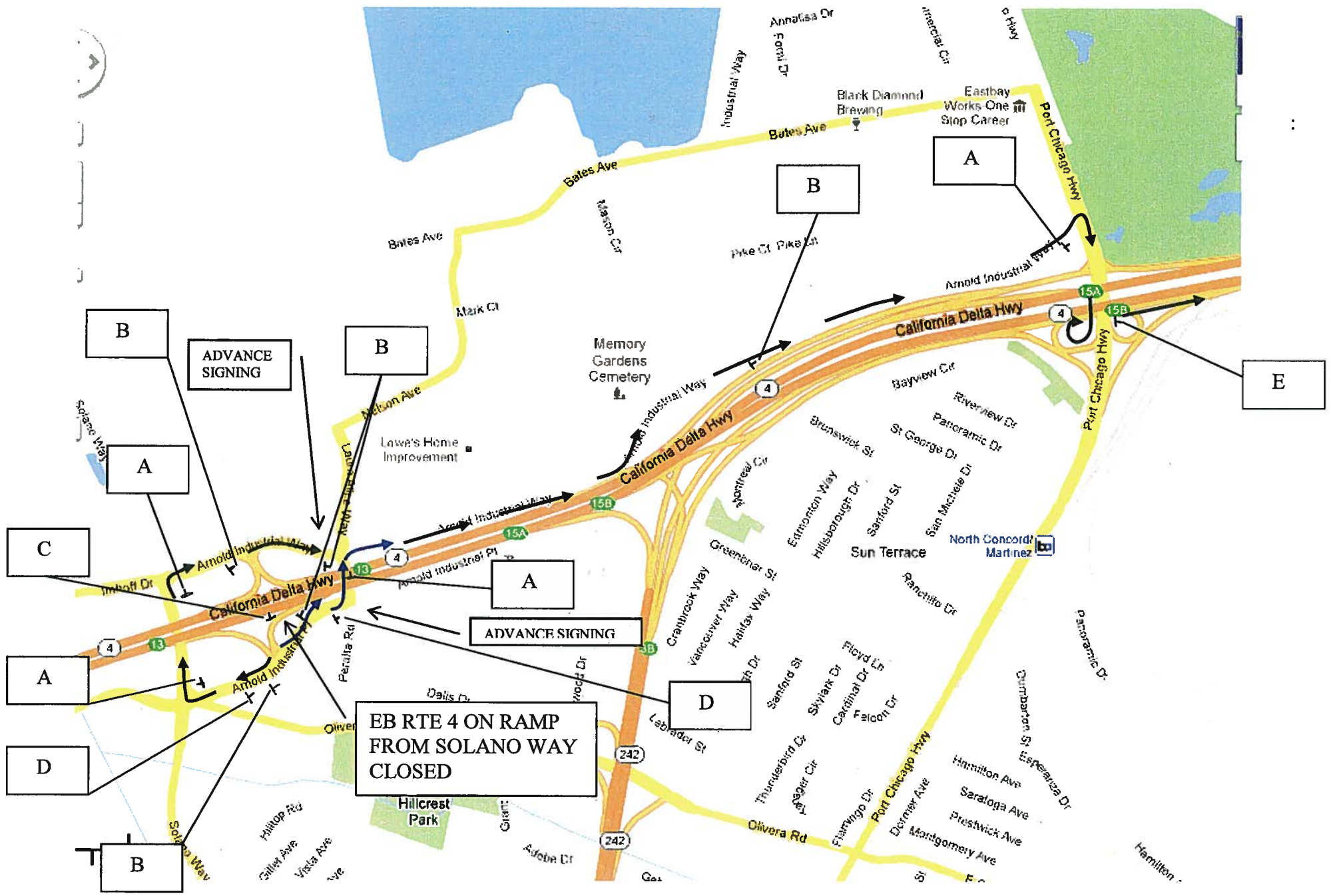

DETOUR PLAN: No. 1

EA-152714/CC-4/PM R 13.936

EB ROUTE 4 ON-RAMP FROM SOLANO WAY CLOSURE

TRAFFIC FROM WB ARNOLD INDUSTRIAL Pl.
Via
NB SOLANO WAY;
EB ARNOLD INDUSTRIAL WAY;
SB PORT CHICAGO HIGHWAY;
ON-RAMP TO EB ROUTE 4.

TRAFFIC FROM EB ARNOLD INDUSTRIAL Pl.
Via
NB PERALTA Rd;
EB ARNOLD INDUSTRIAL WAY;
SB PORT CHICAGO HIGHWAY;
ON-RAMP TO EB ROUTE 4.

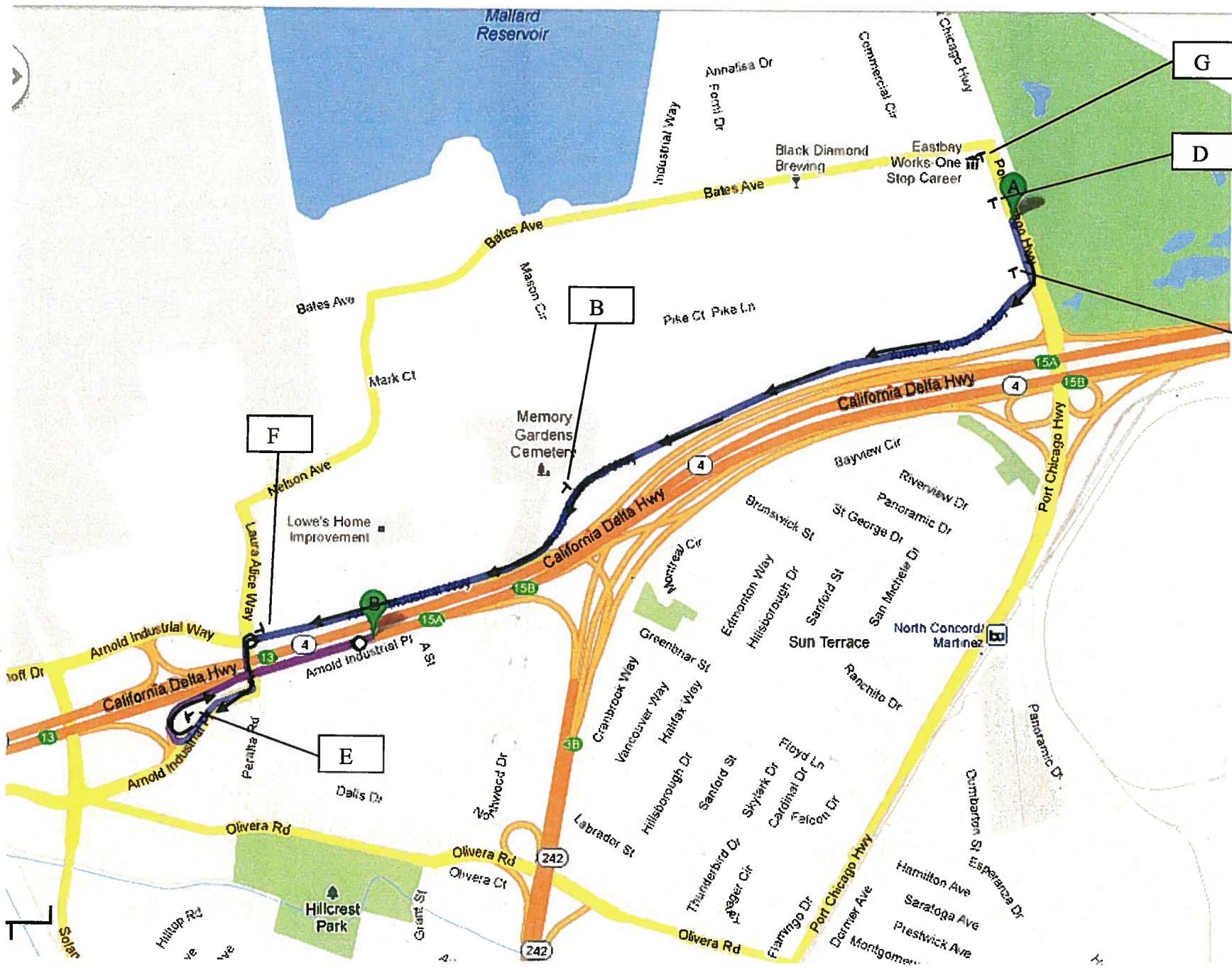

SPECIAL

EAST

4

RAMP CLOSED

6"C

EB ROUTE 4 "LOOP" ON-RAMP FROM PORT CHICAGO Hwy CLOSURE

Via
SB PORT CHICAGO Hwy;
WB ARNOLD INDUSTRIAL WAY;
SB LAURA ALICE WAY;
WB ARNOLD INDUSTRIAL Pl;
ON-RAMP TO EB ROUTE 4.

DETOUR PLAN: No. 2

EA-152714/CC-4/PM R 15.603

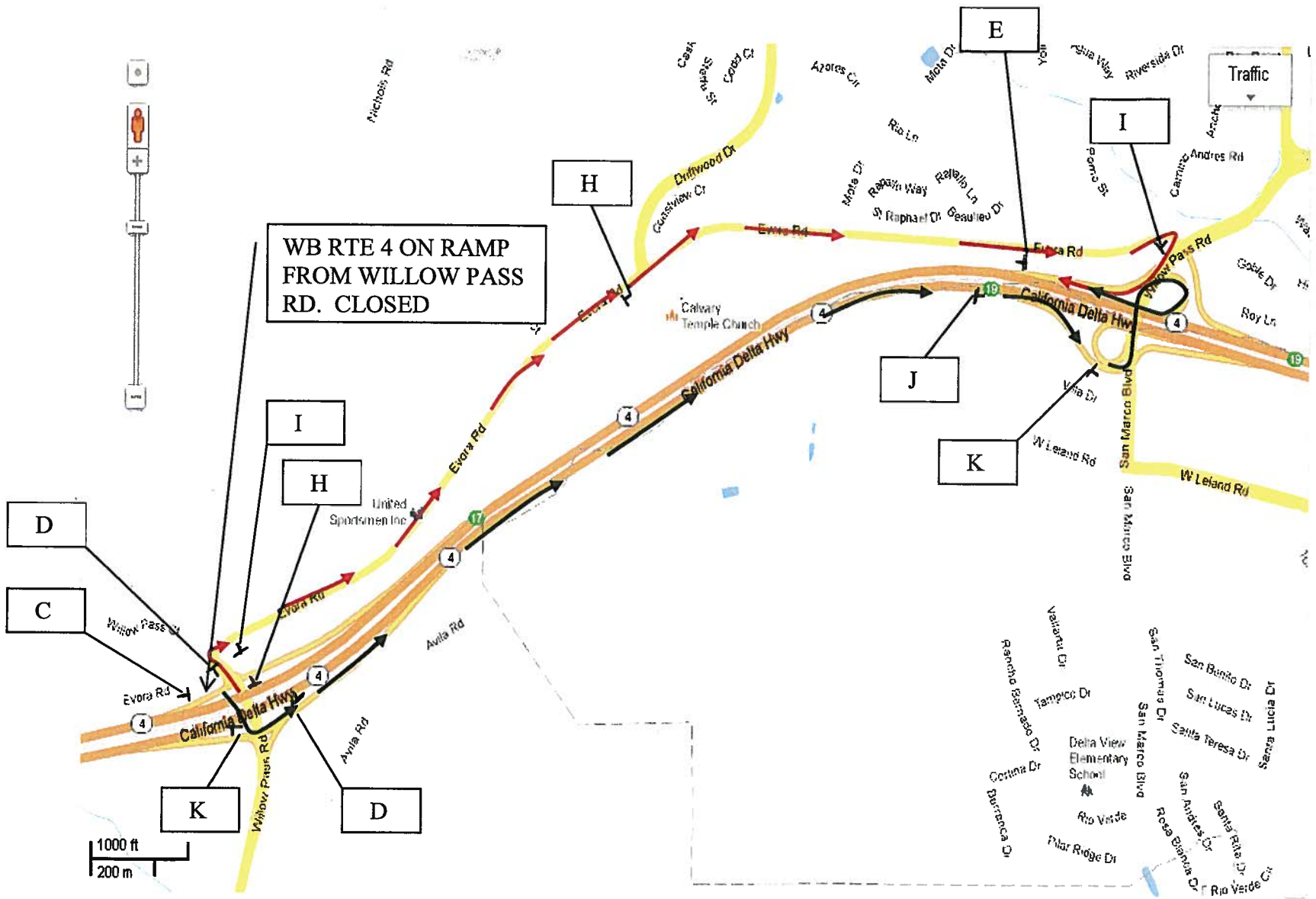

DETOUR PLAN: No. 3

EA-152714/CC-4/PM R 16.688

WB ROUTE 4 ON-RAMP FROM WILLOW PASS Rd CLOSURE

TRAFFIC FROM SB WILLOW PASS Rd;
Via
ON-RAMP TO EB ROUTE 4;
EB ROUTE 4;
OFF-RAMP TO SAN MARCO Blvd;
NB SAN MARCO Blvd;
"LOOP" ON-RAMP TO WB ROUTE 4.

TRAFFIC FROM NB WILLOW PASS Rd;
Via
EB EVORA Rd;
SB WILLOW PASS Rd;
ON-RAMP TO WB ROUTE 4.

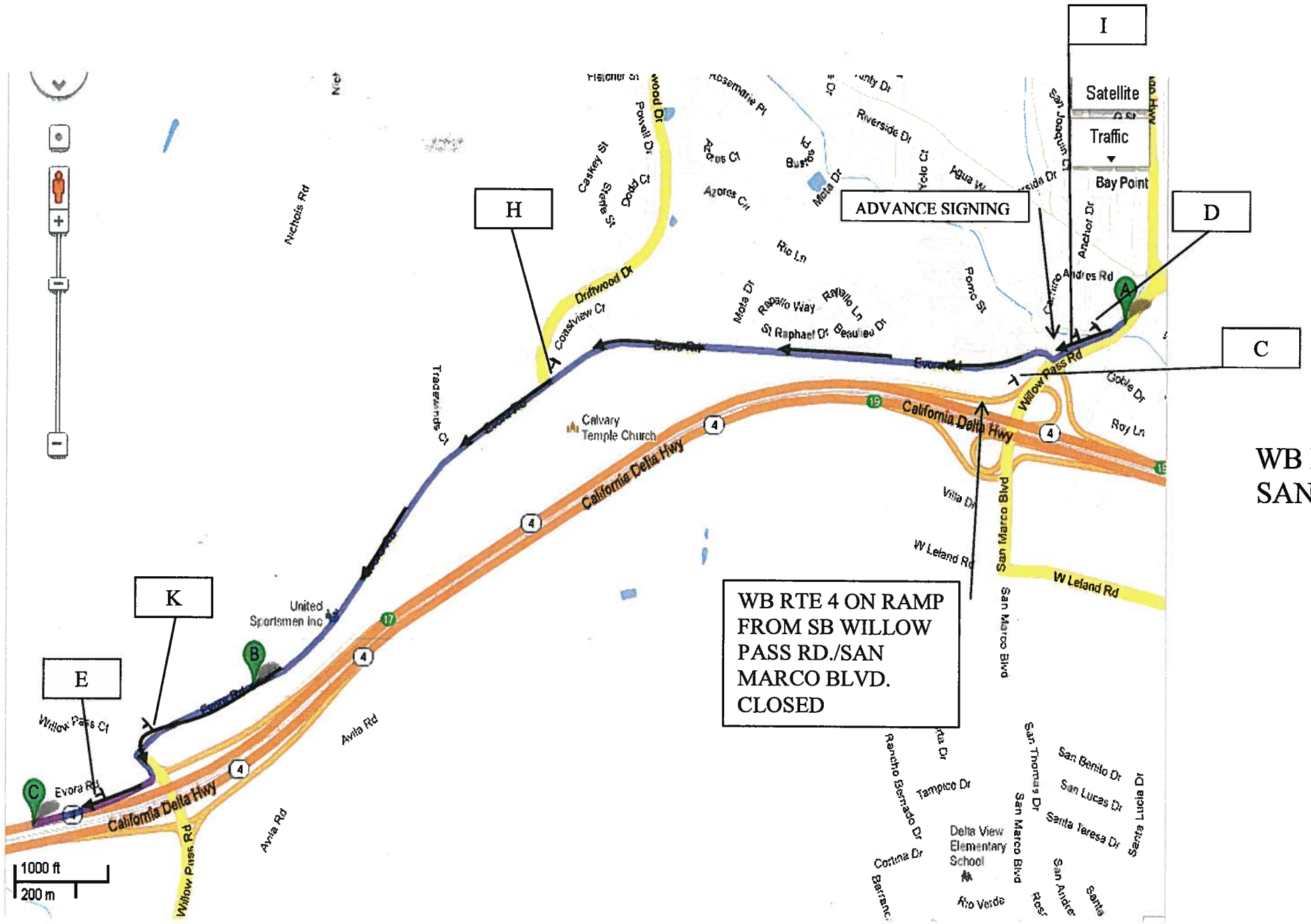

WB ROUTE 4 ON-RAMP FROM SB WILLOW PASS Rd/ SAN MARCO Blvd

CLOSURE

Via
SB WILLOW PASS Rd/SAN MARCO Blvd;
WB EVORA Rd;
SB WILLOW PASS Rd;
ON-RAMP TO WB ROUTE 4.

DETOUR PLAN: No. 5

EA-152714/CC-4/PM R 18.571

DETOUR PLAN No. 6

EA-152714/CC-4/PM R 18.727

EB ROUTE 4 "LOOP" ON-RAMP FROM SB WILLOW PASS Rd/ SAN MARCO Blvd

CLOSURE

Via
SB WILLOW PASS Rd TO SAN MARCO Blvd;
EB W LELAND Rd;
NB BAILEY Rd;
ON-RAMP TO EB ROUTE 4.

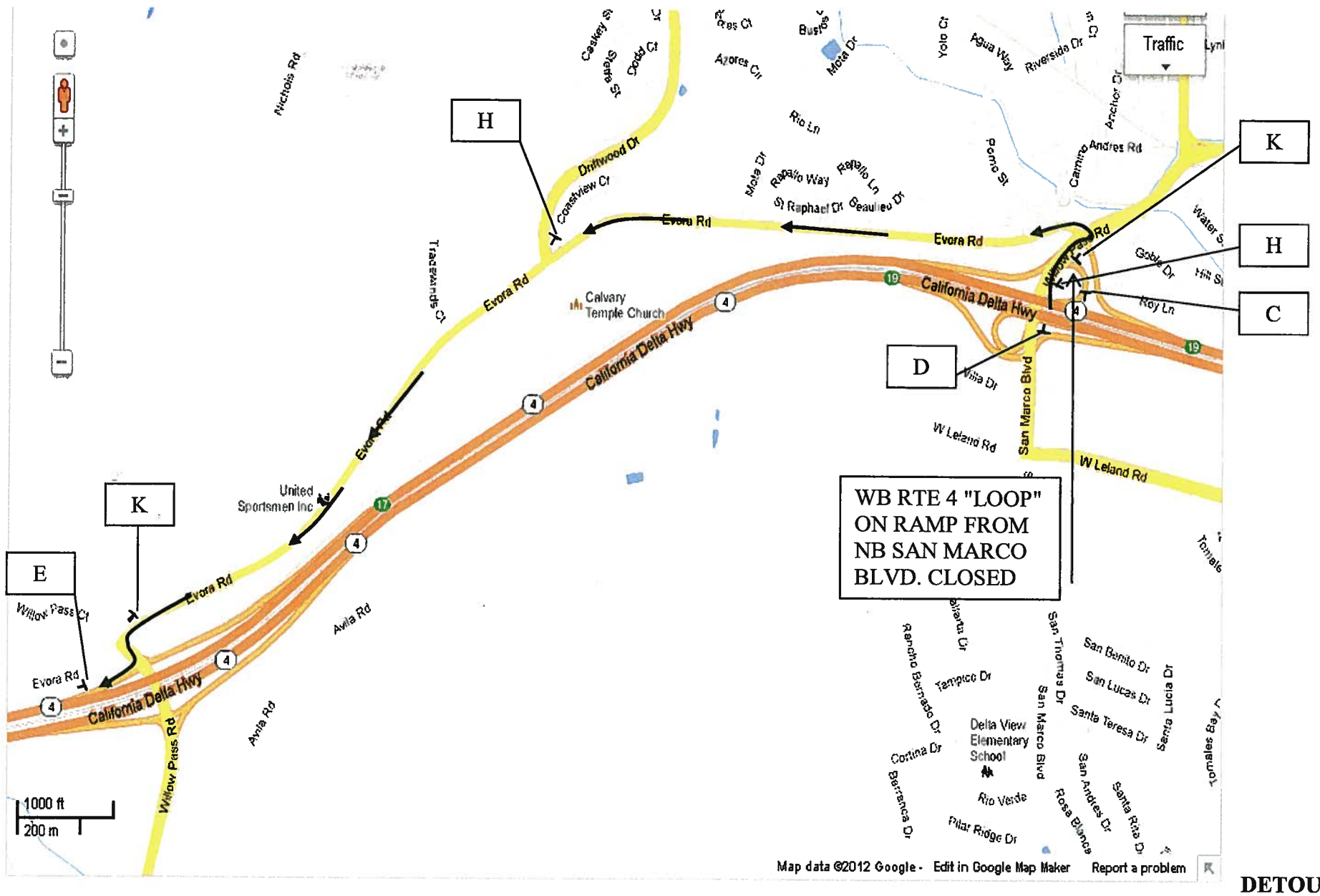

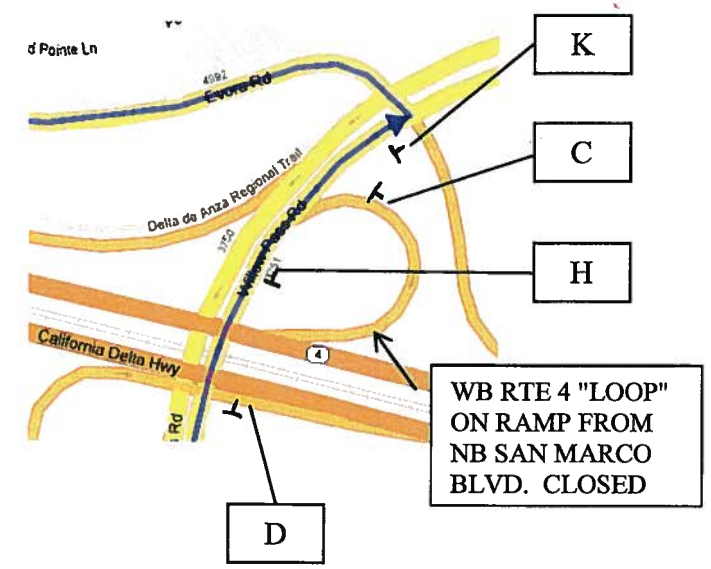

WB ROUTE 4 "LOOP" ON-RAMP FROM NB SAN MARCO Blvd CLOSURE

Via
NB SAN MARCO Blvd;
WB EVORA Rd;
SB WILLOW PASS Rd;
ON-RAMP TO WB ROUTE 4.

18.810

DETOUR PLAN: No. 7

EA-152714/CC-4/PM R

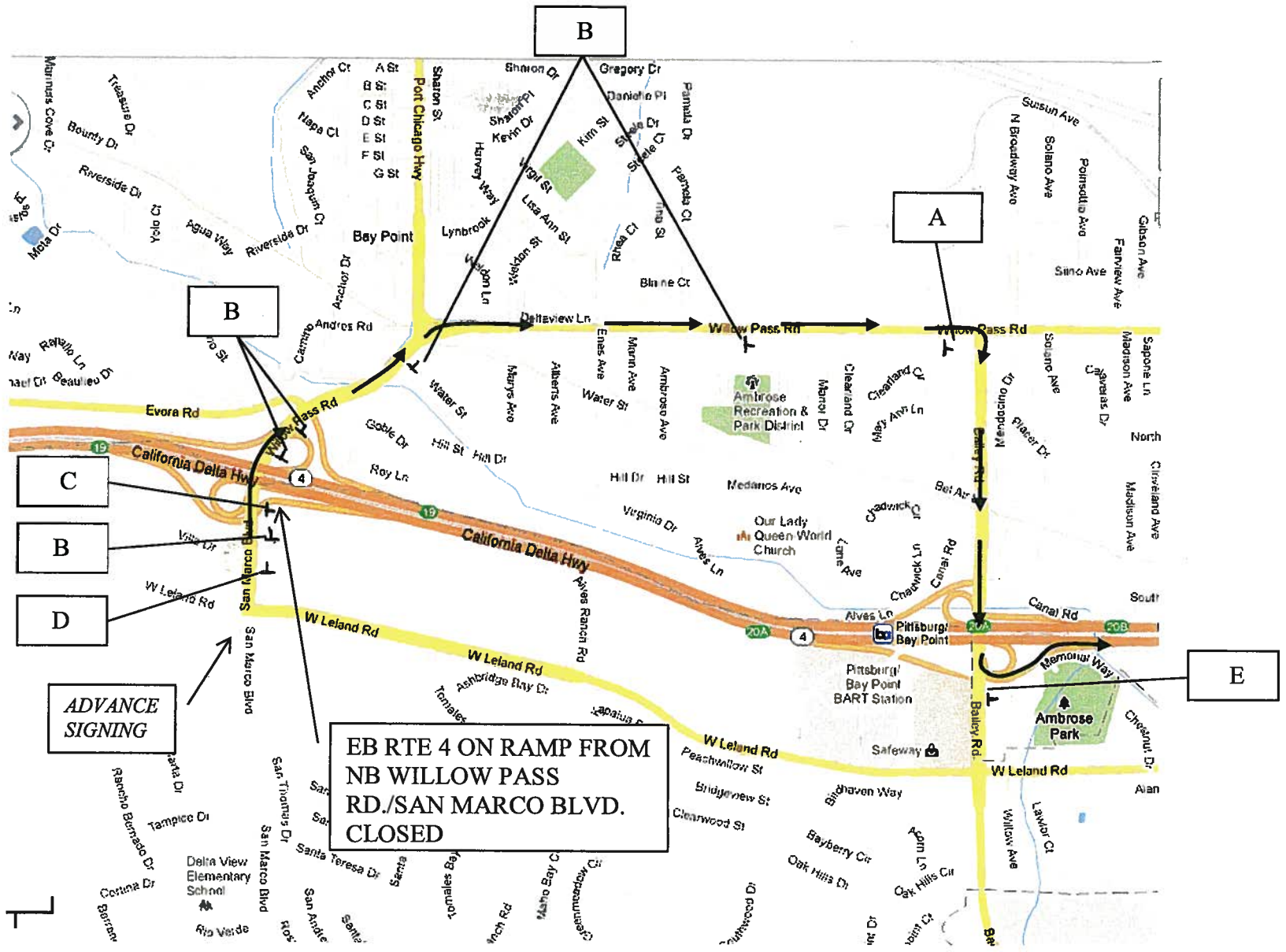

DETOUR PLAN: No. 8

EA-152714/CC-4/PM R 18.964

EB ROUTE 4 ON-RAMP FROM NB WILLOW PASS Rd/
SAN MARCO Blvd

CLOSURE

Via
NB SAN MARCO Blvd /WILLOW PASS Rd;
CONTINUE ON TO EB WILLOW PASS Rd;
SB BAILEY Rd;
ON-RAMP TO EB ROUTE 4.

SPECIAL

NORTH

6"C

242

RAMP CLOSED

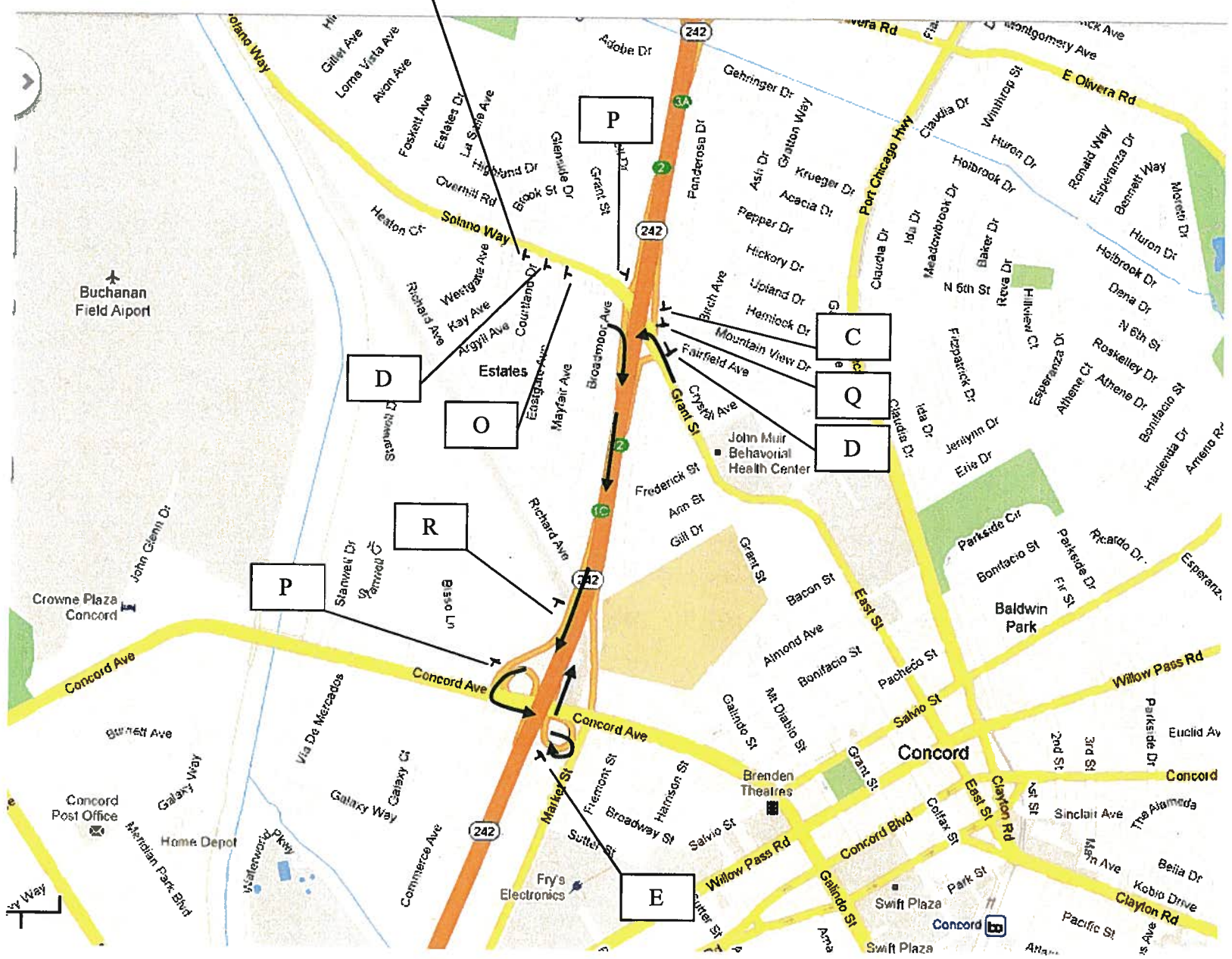

DETOUR PLAN: No. 16

EA-152714/CC-242/PM 2.274

NB ROUTE 242 ON-RAMP FROM SOLANO WAY/GRANT St CLOSURE

Via
EB SOLANO WAY/ WB GRANT St;
ON-RAMP TO SB ROUTE 242;
SB ROUTE 242;
OFF-RAMP TO CONCORD Ave;
EB CONCORD Ave;
"LOOP" ON-RAMP TO NB ROUTE 242.

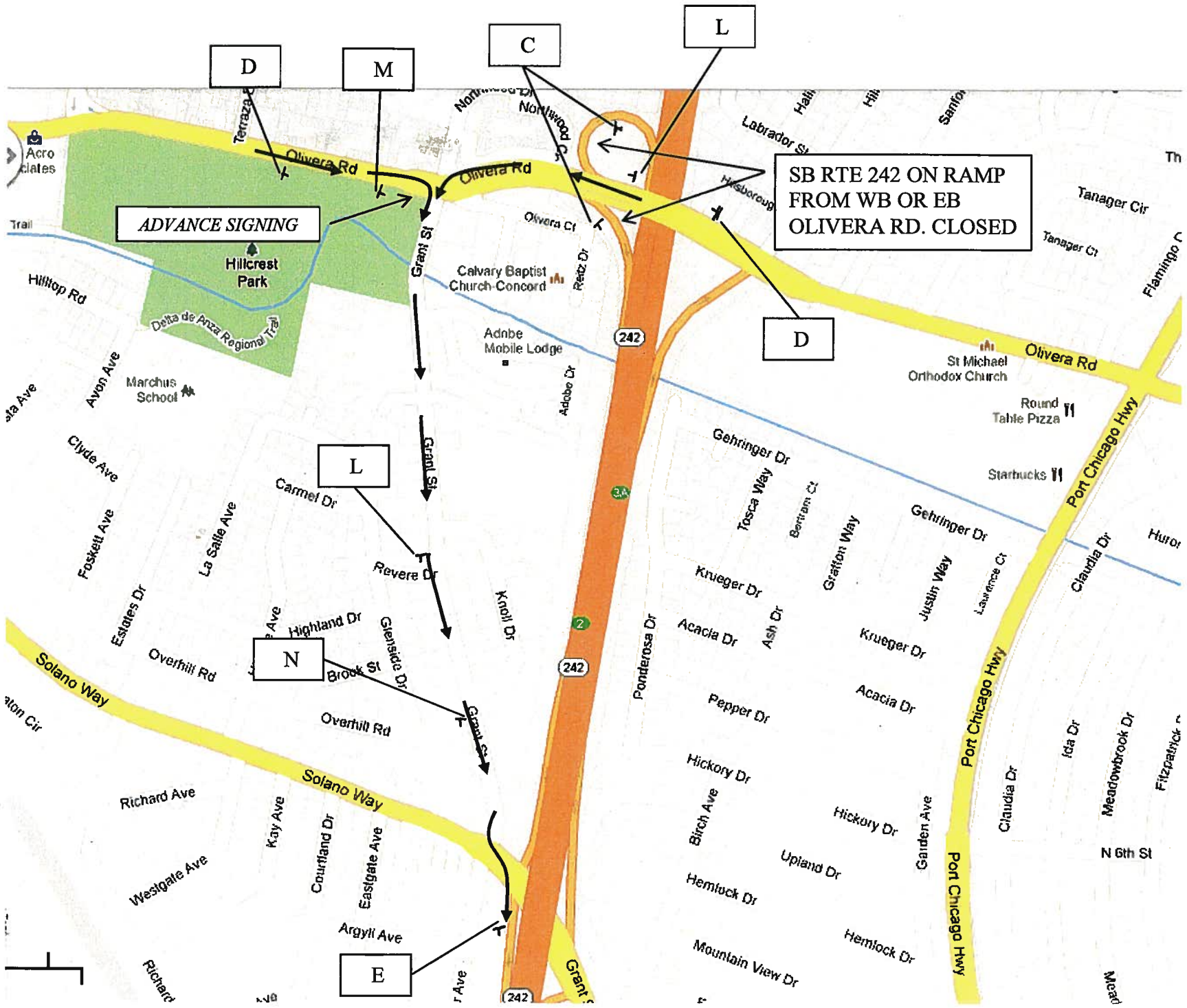

DETOUR PLAN: No. 17 OR 18

EA-152714/CC-242/PM 2.732/2.733

SB ROUTE 242 ON-RAMP FROM WB OR EB OLIVERA Rd CLOSURE

Via
WB OR EB OLIVERA Rd;
SB GRANT St;
EB SOLANO WAY;
ON-RAMP TO SB ROUTE 242.

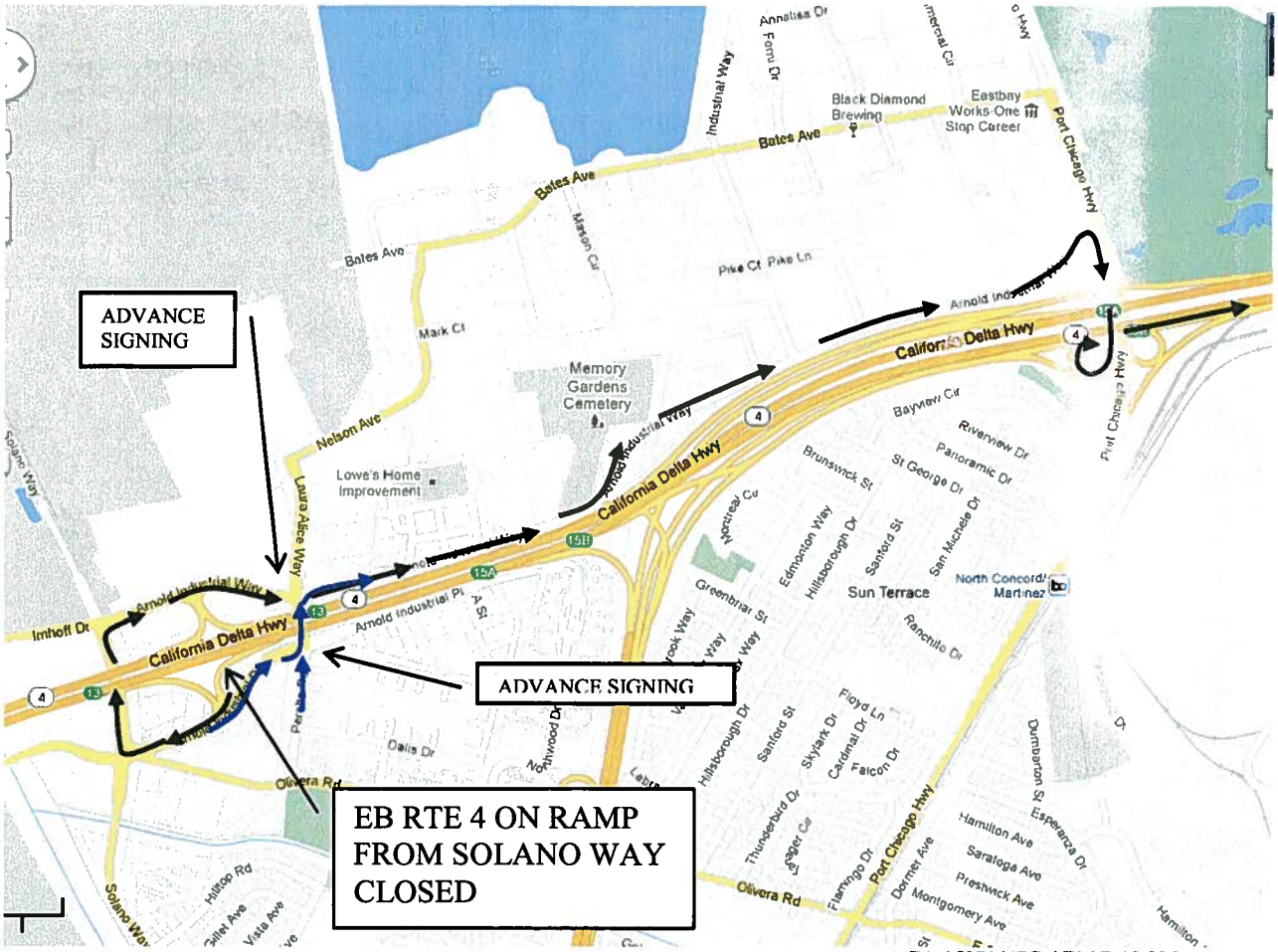

EA-152714/CC-4/PM R 13.936

DETOUR PLAN: LOCATION NO. 1

EB RTE 4 ON RAMP FROM SOLANO WAY CLOSURE

DETOUR:

TRAFFIC FROM WB ARNOLD INDUSTRIAL PL:
VIA:
NB SOLANO WAY;
EB ARNOLD INDUSTRIAL WAY;
SB PORT CHICAGO HIGHWAY;
ON-RAMP TO EB RTE 4

TRAFFIC FROM EB ARNOLD INDUSTRIAL PL
VIA:
NB PERALTA RD.;
EB ARNOLD INDUSTRIAL WAY;
SB PORT CHICAGO HIGHWAY;
ON-RAMP TO EB RTE 4

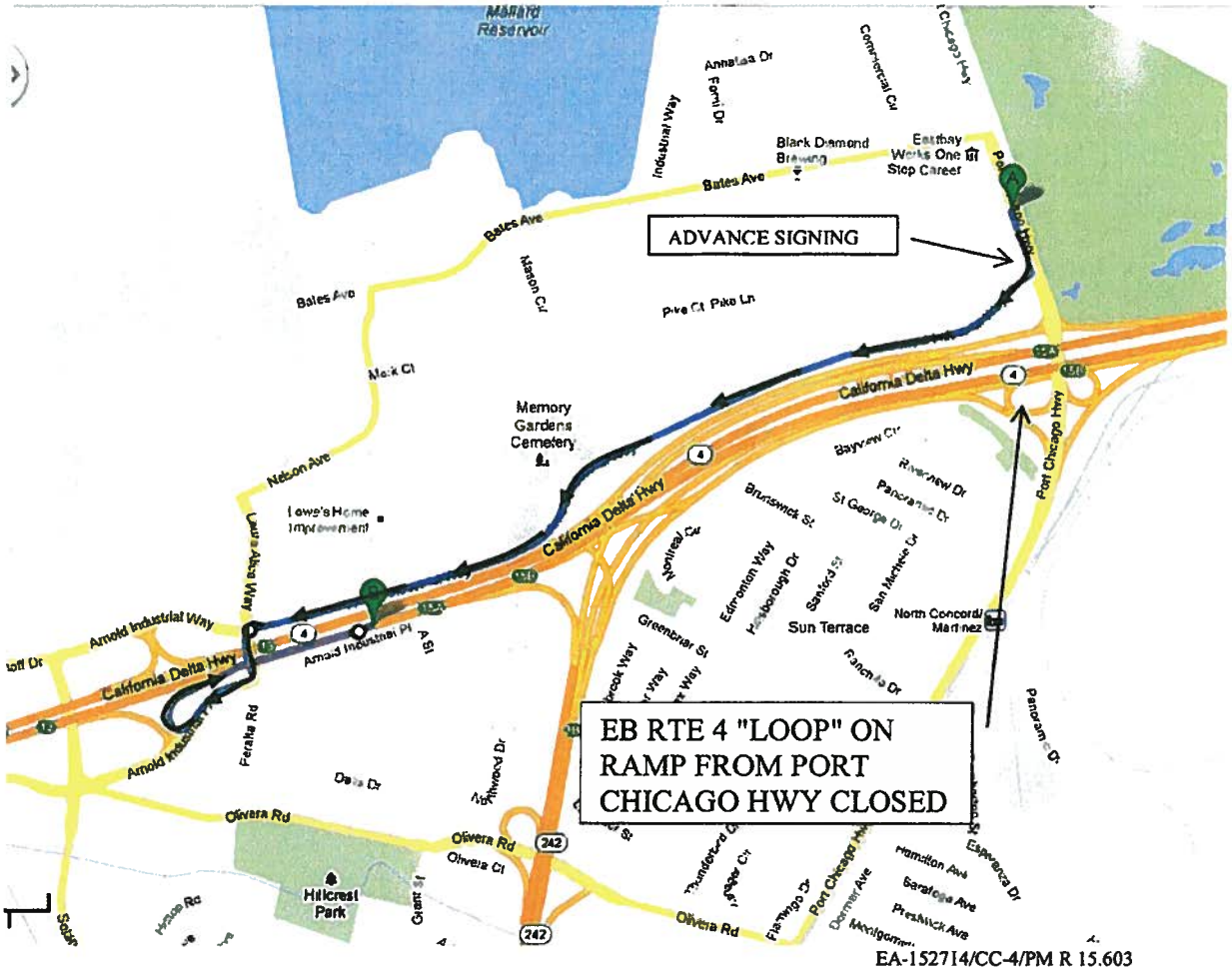

DETOUR PLAN: LOCATION NO. 2

EB RTE 4 "LOOP" ON RAMP FROM PORT CHICAGO HWY CLOSURE

DETOUR VIA:

SB PORT CHICAGO HWY;
WB ARNOLD INDUSTRIAL WAY;
SB LAURA ALICE WAY;
WB ARNOLD INDUSTRIAL PL;
ON-RAMP TO EB RTE 4

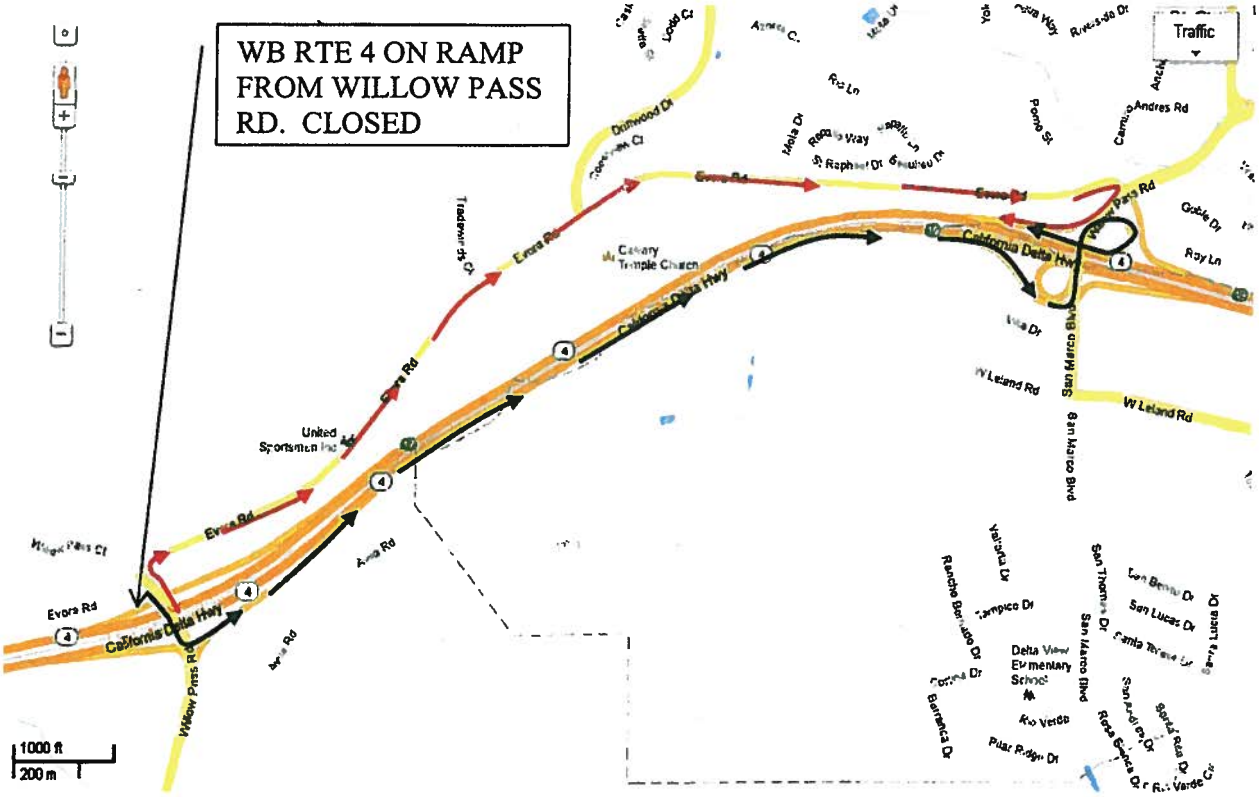

EA-152714/CC-4/PM R 16.688

DETOUR PLAN: LOCATION NO. 3

WB RTE 4 ON RAMP FROM WILLOW PASS RD. CLOSURE

<u>DETOUR</u>

TRAFFIC FROM SB WILLOW PASS RD.:
VIA:
ON RAMP TO EB RTE 4;
EB RTE 4;
OFF RAMP TO SAN MARCO BLVD.
NB SAN MARCO BLVD.;
"LOOP" ON-RAMP TO WB RTE 4

TRAFFIC FROM NB WILLOW PASS RD.:
VIA:
EB EVORA RD.;
SB WILLOW PASS RD.;
ON RAMP TO WB RTE 4

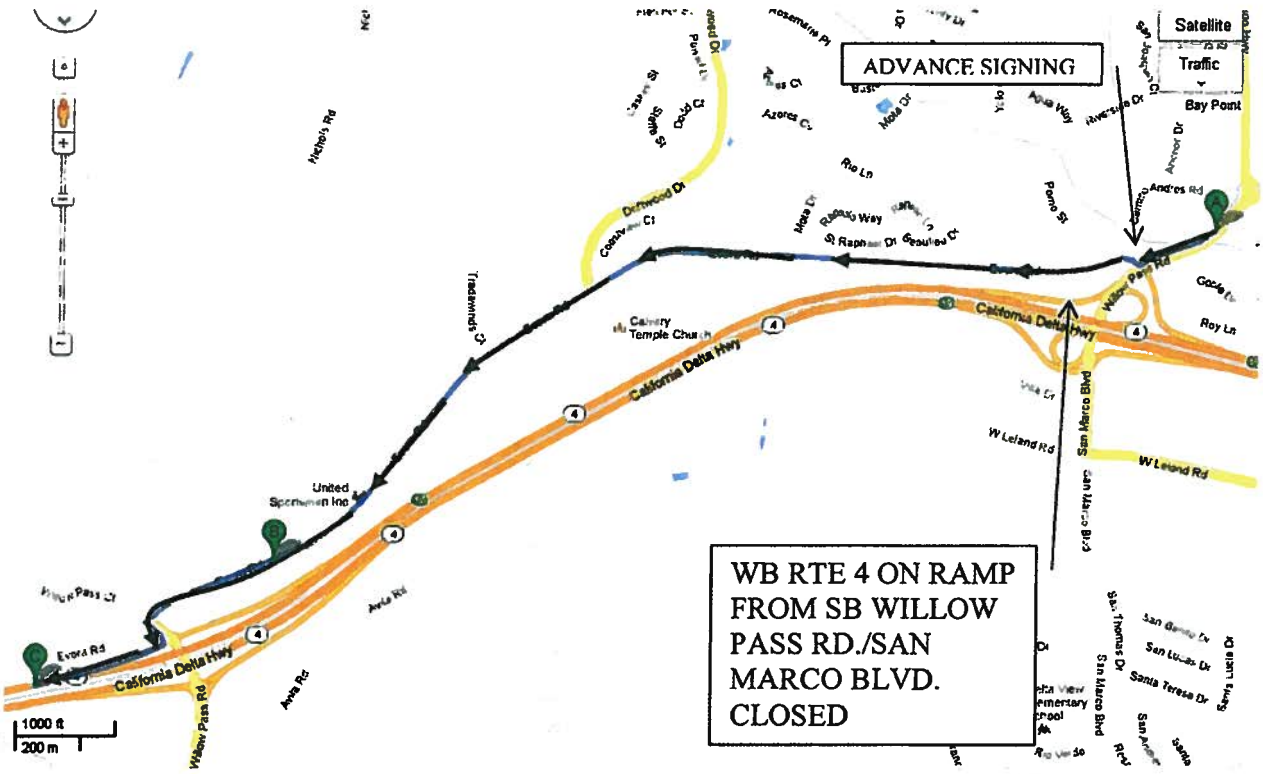

EA-152714/CC-4/PM R 18.571

DETOUR PLAN: LOCATION NO. 5

WB RTE 4 ON RAMP FROM SB WILLOW PASS RD./SAN MARCO BLVD. CLOSURE

DETOUR VIA:

SB WILLOW PASS RD./SAN MARCO BLVD.;
WB EVORA RD.;
SB WILLOW PASS RD.;
ON-RAMP TO WB RTE 4

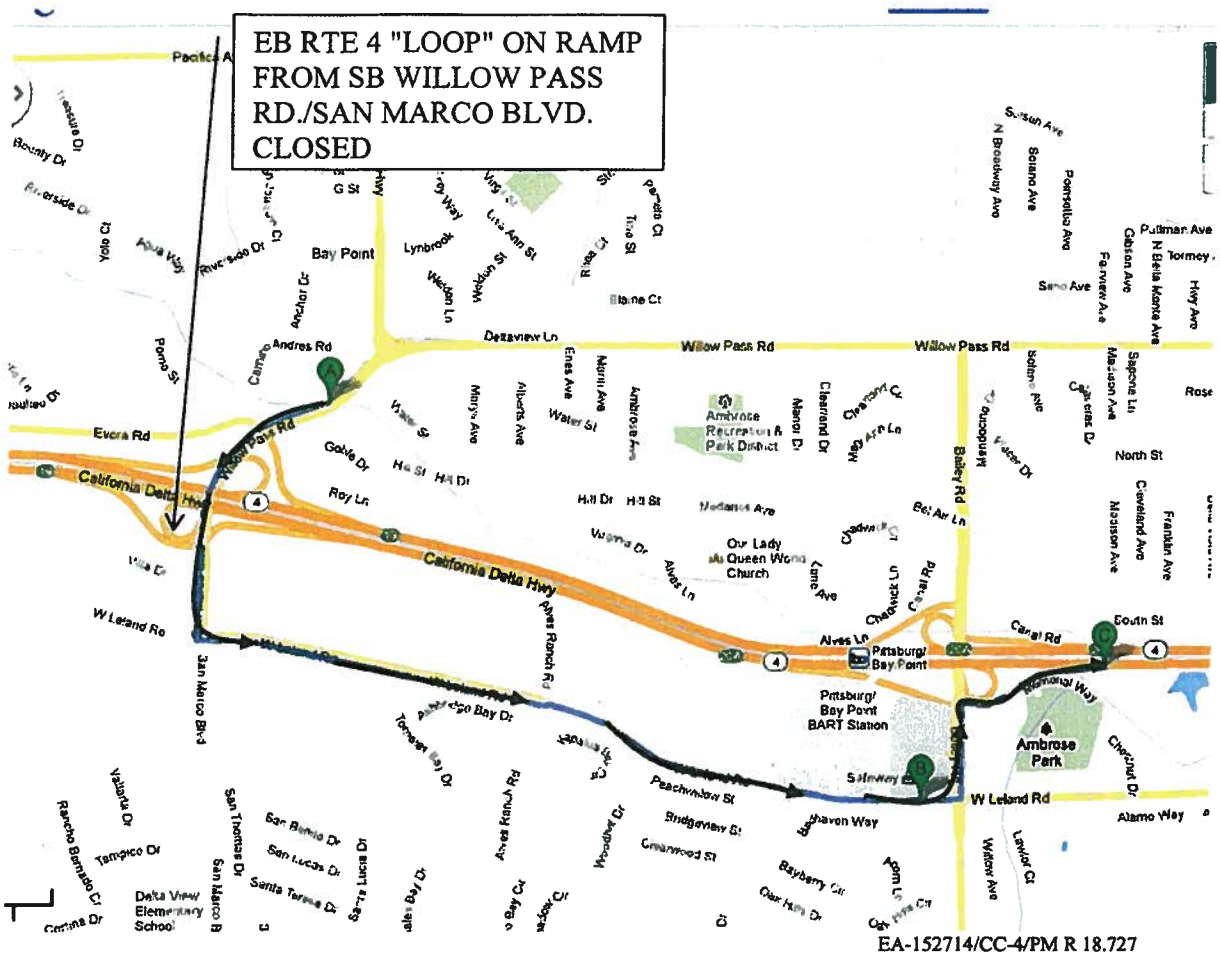

DETOUR PLAN: <u>LOCATION NO. 6</u>

EB RTE 4 "LOOP" ON RAMP FROM SB WILLOW PASS RD./SAN MARCO BLVD. CLOSURE

<u>DETOUR VIA</u>:

SB WILLOW PASS RD. TO SAN MARCO BLVD.;
EB W LELAND RD.;
NB BAILEY RD.;
ON-RAMP TO EB RTE 4

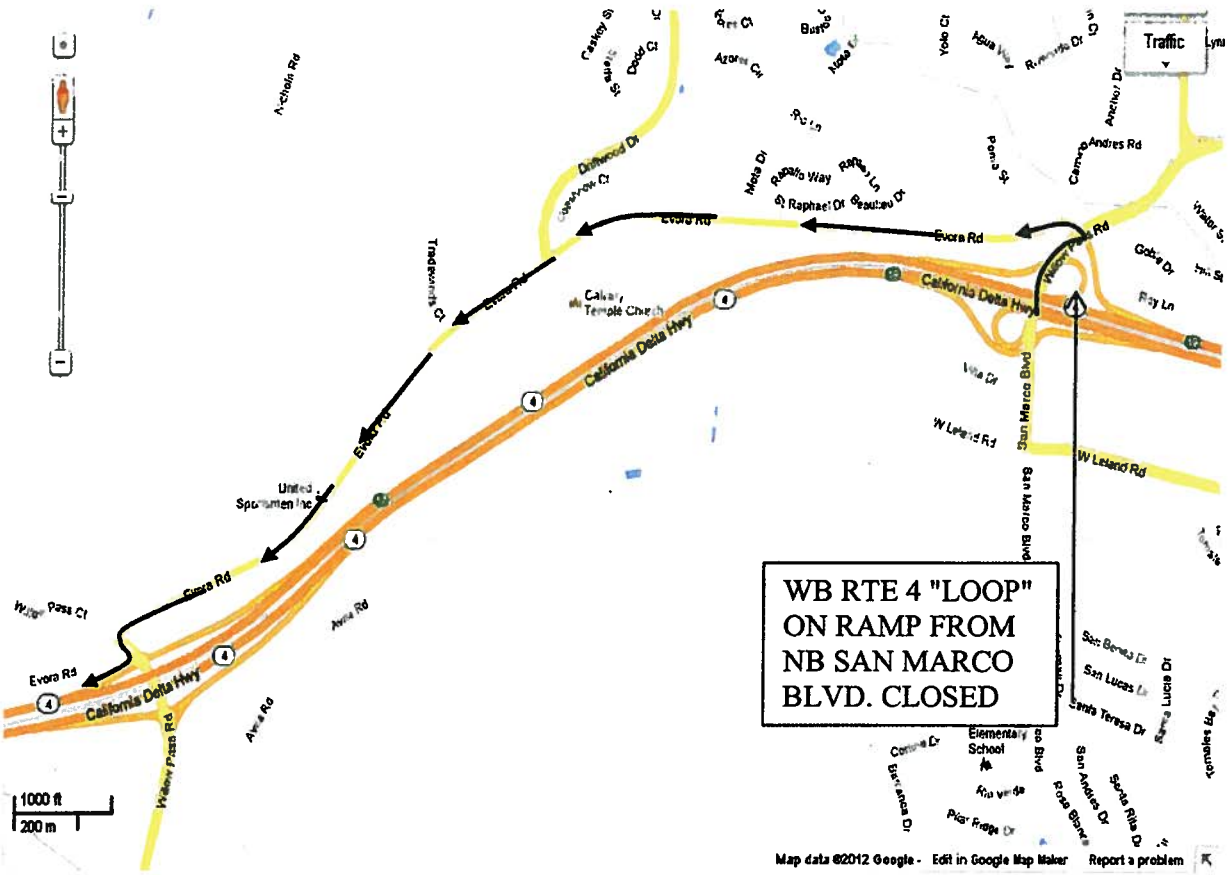

EA-152714/CC-4/PM R 18.810

DETOUR PLAN: LOCATION NO. 7

WB RTE 4 "LOOP" ON RAMP FROM NB SAN MARCO BLVD. CLOSURE

DETOUR VIA:

NB SAN MARCO BLVD.;
WB EVORA RD.;
SB WILLOW PASS RD.;
ON RAMP TO WB RTE 4

EA-152714/CC-4/PM R 18.964

DETOUR PLAN: <u>LOCATION NO. 8</u>

EB RTE 4 ON RAMP FROM NB WILLOW PASS RD./SAN MARCO BLVD. CLOSURE

<u>DETOUR VIA:</u>

NB SAN MARCO BLVD./WILLOW PASS RD.;
CONTINUE ON TO EB WILLOW PASS RD.;
SB BAILEY RD.;
ON-RAMP TO EB RTE 4

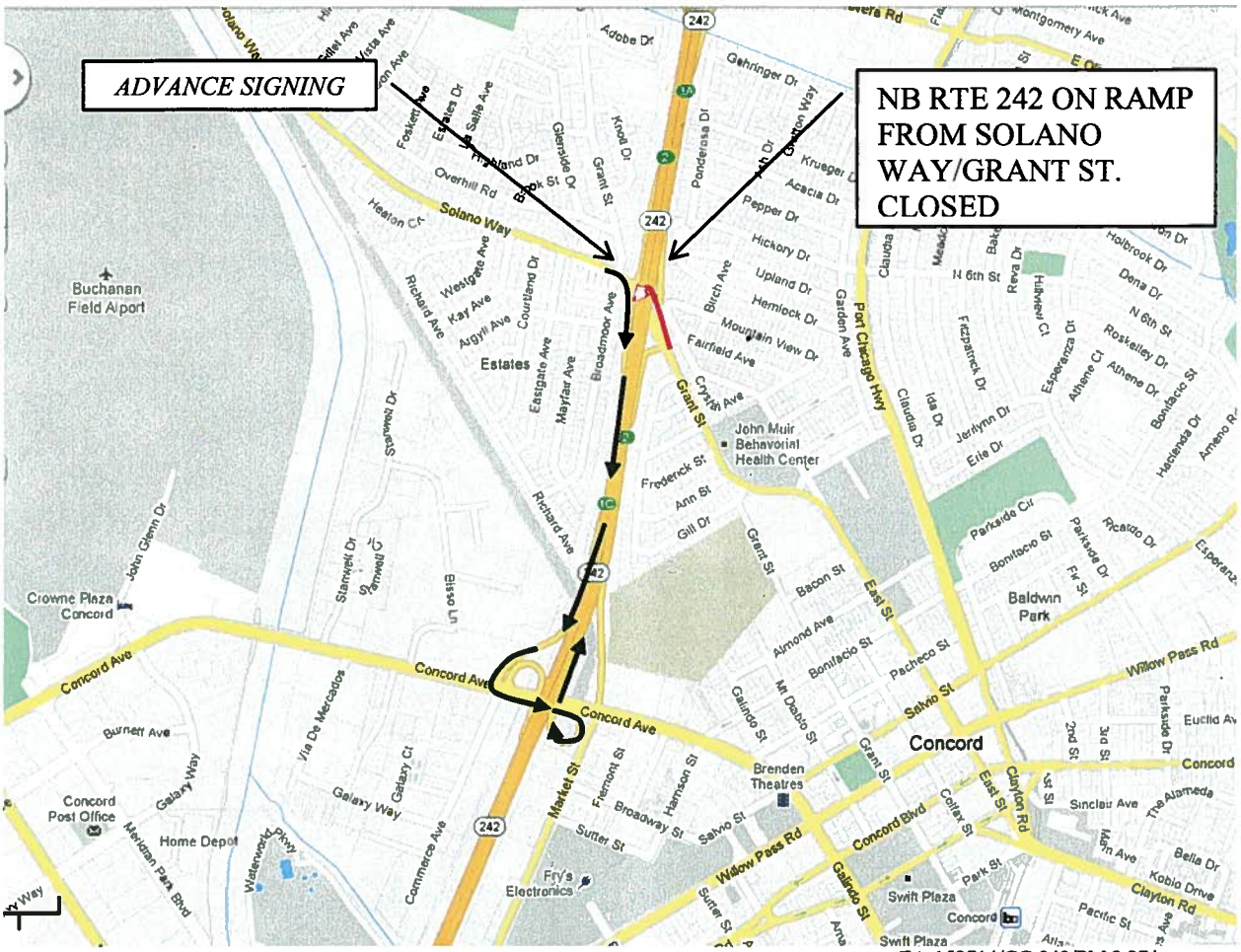

EA-152714/CC-242/PM 2.274

DETOUR PLAN: LOCATION NO. 16

NB RTE 242 ON RAMP FROM SOLANO WAY/GRANT ST. CLOSURE

DETOUR VIA:

EB SOLANO WAY/ WB GRANT ST.;
ON RAMP TO SB RTE 242;
SB RTE 242;
OFF RAMP TO CONCORD AVE.;
EB CONCORD AVE.;
"LOOP" ON-RAMP TO NB RTE 242

EA-152714/CC-242/PM 2.732/2.733

DETOUR PLAN: LOCATION NO. 17 OR 18

SB RTE 242 ON RAMP FROM WB OR EB OLIVERA RD. CLOSURE

<u>DETOUR VIA</u>:

WB OR EB OLIVERA RD.;
SB GRANT ST.;
EB SOLANO WAY;
ON-RAMP TO SB RTE 242

Section 12-4.05B. Use for multilane highways.

Edit the chart title and use as many charts as needed. Do not duplicate the introduction (i.e., Replace "Reserved" in section . . .) for multiple charts.

Edits do not require approval by the SSP Owner, but must be verified by the District Traffic Manager.

Replace "Reserved" in section 12-4.05B with:

Chart no. 1
Freeway/Expressway Lane Requirements

County: Contra Costa | Route/Direction: 4/EB | PM: R13.936/23.161

Closure limits: From Solano Way on ramp to Railroad Ave. on ramp

From hour to hour	24	1	2	3	4	5	6	7	8	9	10	11	12	13	14	15	16	17	18	19	20	21	22	23	24
Mondays through Thursdays	1	1	1	1	1	2																	3	2	
Fridays	2	1	1	1	1	2																	3	3	
Saturdays	2	1	1	1	1	1	2	2	3	3										3	3	3	3	2	
Sundays	2	1	1	1	1	1	1	2	2	3	3									3	3	3	2	2	

Legend:

Delete [cut] any legend not used.
Do not use shading or crosshatching. 1/2-hour increments can be accomplished by splitting the appropriate cell.
Edit for right or left shoulder closure. Do not edit if both shoulder closures apply.

1	Provide at least 1 through freeway lane open in direction of travel
2	Provide at least 2 adjacent through freeway lanes open in direction of travel
3	Provide at least 3 adjacent through freeway lanes open in direction of travel
4	~~Provide at least 4 adjacent through freeway lanes open in direction of travel~~
5	~~Provide at least 5 adjacent through freeway lanes open in direction of travel~~
S	~~Shoulder closure allowed (right / left)~~
N	~~No work allowed~~
	Work allowed within the highway where shoulder or lane closure is not required

REMARKS:

Section 12-4.05B. Use for multilane highways.

Edit the chart title and use as many charts as needed. Do not duplicate the introduction (I.e., Replace "Reserved" in section . . .) for multiple charts.

Edits do not require approval by the SSP Owner, but must be verified by the District Traffic Manager.

Replace "Reserved" in section 12-4.05B with:

Chart no. 2
Freeway/Expressway Lane Requirements

County: Contra Costa | Route/Direction: 4/WB | PM: R13.936/23.161

Closure limits: From Railroad Ave. on ramp to Solano Way on ramp

From hour to hour	24	1	2	3	4	5	6	7	8	9	10	11	12	13	14	15	16	17	18	19	20	21	22	23	24
Mondays through Thursdays	1	1	1	1																3	2	2	2	1	
Fridays	1	1	1	1																3	3	3	2	2	
Saturdays	1	1	1	1	1	2	3	3											3	3	3	3	2	2	
Sundays	1	1	1	1	1	1	2	2	3	3								3	3	3	3	3	2	1	

Legend:

Delete [cut] any legend not used.
Do not use shading or crosshatching. 1/2-hour increments can be accomplished by splitting the appropriate cell.
Edit for right or left shoulder closure. Do not edit if both shoulder closures apply.

1	Provide at least 1 through freeway lane open in direction of travel
2	Provide at least 2 adjacent through freeway lanes open in direction of travel
3	Provide at least 3 adjacent through freeway lanes open in direction of travel
~~4~~	~~Provide at least 4 adjacent through freeway lanes open in direction of travel~~
~~5~~	~~Provide at least 5 adjacent through freeway lanes open in direction of travel~~
~~S~~	~~Shoulder closure allowed (right / left)~~
~~N~~	~~No work allowed~~
	Work allowed within the highway where shoulder or lane closure is not required

REMARKS:

Section 12-4.05E. Use for ramp closure.

Edit the chart title and use as many charts as needed. Use "Complete Ramp Closure Hours" as the chart title for a complete ramp closure. Use "Ramp Lane Requirements" as the chart title for a lane closure on a ramp with multiple lanes. Do not duplicate the introduction (i.e., Replace "Reserved" in section . . .) for multiple charts.

Specify any detour routes or references to the applicable detour or traffic handling plans in the "REMARKS" section.

Edits do not require approval by the SSP Owner, but must be verified by the District Traffic Manager.

Replace "Reserved" in section 12-4.05E with:

Chart no. 3
Complete Ramp Closure Hours/Ramp Lane Requirements

County: Contra Costa | Route/Direction: 4/EB | PM: R13.936

Closure limits: On the Solano Way on ramp

From hour to hour	24	1	2	3	4	5	6	7	8	9	10	11	12	13	14	15	16	17	18	19	20	21	22	23	24
Mondays through Thursdays	C	C	C	C	C	C	C	C	C	C	C										C	C	C	C	
Fridays	C	C	C	C	C	C	C	C	C	C	C										C	C	C	C	
Saturdays	C	C	C	C	C	C	C	C	C	C	C	C	C	C	C	C	C	C	C	C	C	C	C	C	
Sundays	C	C	C	C	C	C	C	C	C	C	C	C	C	C	C	C	C	C	C	C	C	C	C	C	

Legend:

Delete [cut] any legend not used.
Do not use shading or crosshatching. 1/2-hour increments can be accomplished by splitting the appropriate cell.
Edit for right or left shoulder closure. Do not edit if both shoulder closures apply.

~~1~~ ~~Provide at least 1 ramp lane, not less than 11 feet in width, open in direction of travel~~

~~2~~ ~~Provide at least 2 adjacent ramp lanes open in direction of travel~~

C Ramp may be closed completely

~~S~~ ~~Shoulder closure allowed~~

~~N~~ ~~No work allowed~~

Work allowed within the highway where shoulder or lane closure is not required

REMARKS: SEE DETOUR PLAN: LOCATION NO. 1

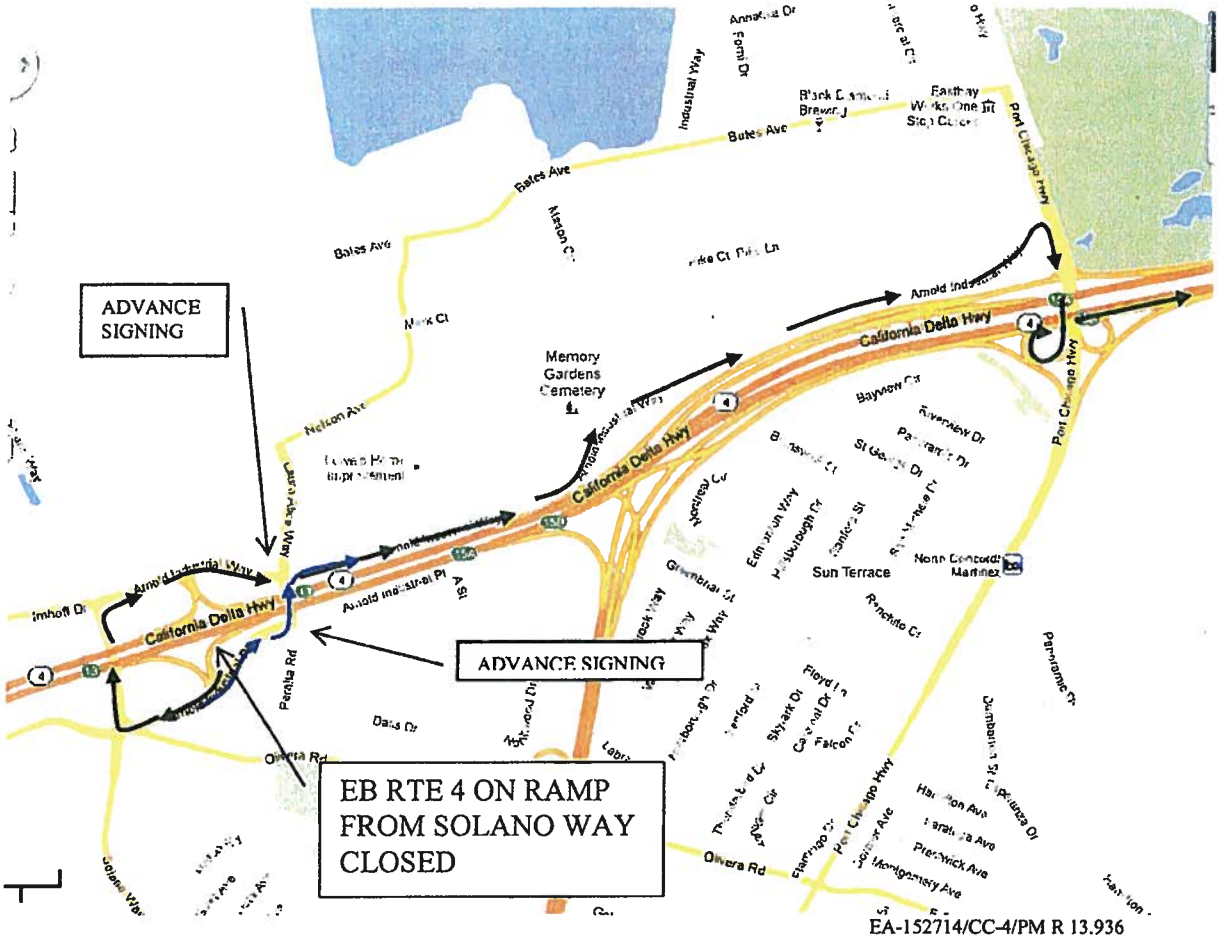

DETOUR PLAN: LOCATION NO. 1

EB RTE 4 ON RAMP FROM SOLANO WAY CLOSURE

DETOUR:

TRAFFIC FROM WB ARNOLD INDUSTRIAL PL:
VIA:
NB SOLANO WAY;
EB ARNOLD INDUSTRIAL WAY;
SB PORT CHICAGO HIGHWAY;
ON-RAMP TO EB RTE 4

TRAFFIC FROM EB ARNOLD INDUSTRIAL PL
VIA:
NB PERALTA RD.;
EB ARNOLD INDUSTRIAL WAY;
SB PORT CHICAGO HIGHWAY;
ON-RAMP TO EB RTE 4

Section 12-4.05E. Use for ramp closure.

Edit the chart title and use as many charts as needed. Use "Complete Ramp Closure Hours" as the chart title for a complete ramp closure. Use "Ramp Lane Requirements" as the chart title for a lane closure on a ramp with multiple lanes. Do not duplicate the introduction (i.e., Replace "Reserved" in section . . .) for multiple charts.

Specify any detour routes or references to the applicable detour or traffic handling plans in the "REMARKS" section.

Edits do not require approval by the SSP Owner, but must be verified by the District Traffic Manager.

Replace "Reserved" in section 12-4.05E with:

Chart no. 4
Complete Ramp Closure Hours/Ramp Lane Requirements

County: Contra Costa | Route/Direction: 4/EB | PM: R15.603

Closure limits: On the SB Port Chicago Hwy. "Loop" on ramp

From hour to hour	24	1	2	3	4	5	6	7	8	9	10	11	12	13	14	15	16	17	18	19	20	21	22	23	24
Mondays through Thursdays	C	C	C	C	C	C	C	C	C	C	C											C	C	C	
Fridays	C	C	C	C	C	C	C	C	C	C	C											C	C	C	
Saturdays	C	C	C	C	C	C	C	C	C	C	C	C	C	C	C	C	C	C	C	C	C	C	C	C	
Sundays	C	C	C	C	C	C	C	C	C	C	C	C	C	C	C	C	C	C	C	C	C	C	C	C	

Legend:

Delete [cut] any legend not used.
Do not use shading or crosshatching. 1/2-hour increments can be accomplished by splitting the appropriate cell.
Edit for right or left shoulder closure. Do not edit if both shoulder closures apply.

~~1~~ ~~Provide at least 1 ramp lane, not less than 11 feet in width, open in direction of travel~~

~~2~~ ~~Provide at least 2 adjacent ramp lanes open in direction of travel~~

C Ramp may be closed completely

~~S~~ ~~Shoulder closure allowed~~

~~N~~ ~~No work allowed~~

Work allowed within the highway where shoulder or lane closure is not required

REMARKS: SEE DETOUR PLAN: LOCATION NO. 2

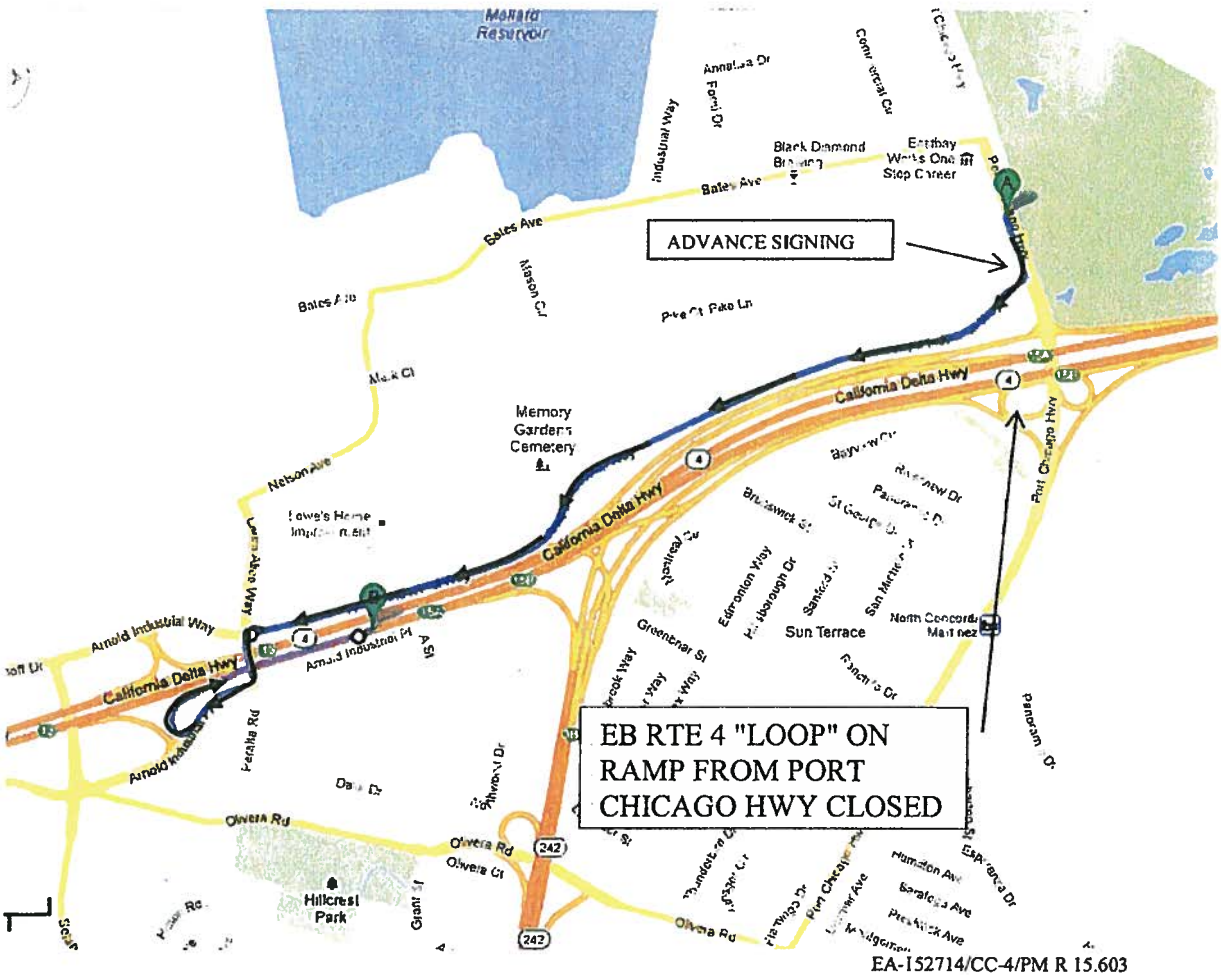

EA-152714/CC-4/PM R 15.603

DETOUR PLAN: LOCATION NO. 2

EB RTE 4 "LOOP" ON RAMP FROM PORT CHICAGO HWY CLOSURE

DETOUR VIA:

SB PORT CHICAGO HWY;
WB ARNOLD INDUSTRIAL WAY;
SB LAURA ALICE WAY;
WB ARNOLD INDUSTRIAL PL;
ON-RAMP TO EB RTE 4

Section 12-4.05E. Use for ramp closure.

Edit the chart title and use as many charts as needed. Use "Complete Ramp Closure Hours" as the chart title for a complete ramp closure. Use "Ramp Lane Requirements" as the chart title for a lane closure on a ramp with multiple lanes. Do not duplicate the introduction (i.e., Replace "Reserved" in section . . .) for multiple charts.

Specify any detour routes or references to the applicable detour or traffic handling plans in the "REMARKS" section.

Edits do not require approval by the SSP Owner, but must be verified by the District Traffic Manager.

Replace "Reserved" in section 12-4.05E with:

Chart no. 4a
Complete Ramp Closure Hours/Ramp Lane Requirements

County: Contra Costa | Route/Direction: 4/EB | PM: R15.604

Closure limits: On the NB Port Chicago Hwy on ramp

From hour to hour	24	1	2	3	4	5	6	7	8	9	10	11	12	13	14	15	16	17	18	19	20	21	22	23	24
Mondays through Thursdays	1	1	1	1	1	1	1	1	1	1	1	1										1	1	1	
Fridays	1	1	1	1	1	1	1	1	1	1	1	1										1	1	1	
Saturdays	1	1	1	1	1	1	1	1	1	1	1	1	1	1	1	1			1	1	1	1	1	1	
Sundays	1	1	1	1	1	1	1	1	1	1	1	1	1	1	1	1	1	1	1	1	1	1	1	1	

Legend:

Delete [cut] any legend not used.
Do not use shading or crosshatching. 1/2-hour increments can be accomplished by splitting the appropriate cell.
Edit for right or left shoulder closure. Do not edit if both shoulder closures apply.

1 Provide at least 1 ramp lane, not less than 11 feet in width, open in direction of travel

~~2 Provide at least 2 adjacent ramp lanes open in direction of travel~~

~~C Ramp may be closed completely~~

~~S Shoulder closure allowed~~

~~N No work allowed~~

Work allowed within the highway where shoulder or lane closure is not required

REMARKS: Location No. 2a

Section 12-4.05E. Use for ramp closure.

Edit the chart title and use as many charts as needed. Use "Complete Ramp Closure Hours" as the chart title for a complete ramp closure. Use "Ramp Lane Requirements" as the chart title for a lane closure on a ramp with multiple lanes. Do not duplicate the introduction (i.e., Replace "Reserved" in section . . .) for multiple charts.

Specify any detour routes or references to the applicable detour or traffic handling plans in the "REMARKS" section.

Edits do not require approval by the SSP Owner, but must be verified by the District Traffic Manager.

Replace "Reserved" in section 12-4.05E with:

Chart no. 4b
Complete Ramp Closure Hours/Ramp Lane Requirements

County: Contra Costa | Route/Direction: 4/EB | PM: R15.753

Closure limits: On the Port Chicago Hwy collector on ramp

From hour to hour	24	1	2	3	4	5	6	7	8	9	10	11	12	13	14	15	16	17	18	19	20	21	22	23	24
Mondays through Thursdays	1	1	1	1	1	1	1	1	1	1	1	1										1	1	1	
Fridays	1	1	1	1	1	1	1	1	1	1	1	1										1	1	1	
Saturdays	1	1	1	1	1	1	1	1	1	1	1	1	1	1	1	1	1	1	1	1	1	1	1	1	
Sundays	1	1	1	1	1	1	1	1	1	1	1	1	1	1	1	1	1	1	1	1	1	1	1	1	

Legend:

Delete [cut] any legend not used.
Do not use shading or crosshatching. 1/2-hour increments can be accomplished by splitting the appropriate cell.
Edit for right or left shoulder closure. Do not edit if both shoulder closures apply.

1 Provide at least 1 ramp lane, not less than 11 feet in width, open in direction of travel

~~2 Provide at least 2 adjacent ramp lanes open in direction of travel~~

~~C Ramp may be closed completely~~

~~S Shoulder closure allowed~~

~~N No work allowed~~

Work allowed within the highway where shoulder or lane closure is not required

REMARKS: Location No. 2b

Section 12-4.05E. Use for ramp closure.

Edit the chart title and use as many charts as needed. Use "Complete Ramp Closure Hours" as the chart title for a complete ramp closure. Use "Ramp Lane Requirements" as the chart title for a lane closure on a ramp with multiple lanes. Do not duplicate the introduction (i.e., Replace "Reserved" in section . . .) for multiple charts.

Specify any detour routes or references to the applicable detour or traffic handling plans in the "REMARKS" section.

Edits do not require approval by the SSP Owner, but must be verified by the District Traffic Manager.

Replace "Reserved" in section 12-4.05E with:

Chart no. 5
Complete Ramp Closure Hours/Ramp Lane Requirements

County: Contra Costa | Route/Direction: 4/EB | PM: R17.181

Closure limits: On the Willow Pass Rd. on ramp

From hour to hour	24	1	2	3	4	5	6	7	8	9	10	11	12	13	14	15	16	17	18	19	20	21	22	23	24
Mondays through Thursdays	1	1	1	1	1	1	1	1	1	1	1	1											1	1	
Fridays	1	1	1	1	1	1	1	1	1	1	1	1											1	1	
Saturdays	1	1	1	1	1	1	1	1	1	1	1	1								1	1	1	1	1	
Sundays	1	1	1	1	1	1	1	1	1	1	1	1						1	1	1	1	1	1	1	

Legend:

Delete [cut] any legend not used.
Do not use shading or crosshatching. 1/2-hour increments can be accomplished by splitting the appropriate cell.
Edit for right or left shoulder closure. Do not edit if both shoulder closures apply.

1 Provide at least 1 ramp lane, not less than 11 feet in width, open in direction of travel

~~2 Provide at least 2 adjacent ramp lanes open in direction of travel~~

~~C Ramp may be closed completely~~

~~S Shoulder closure allowed~~

~~N No work allowed~~

Work allowed within the highway where shoulder or lane closure is not required

REMARKS: Location 4

Section 12-4.05E. Use for ramp closure.

Edit the chart title and use as many charts as needed. Use "Complete Ramp Closure Hours" as the chart title for a complete ramp closure. Use "Ramp Lane Requirements" as the chart title for a lane closure on a ramp with multiple lanes. Do not duplicate the introduction (i.e., Replace "Reserved" in section . . .) for multiple charts.

Specify any detour routes or references to the applicable detour or traffic handling plans in the "REMARKS" section.

Edits do not require approval by the SSP Owner, but must be verified by the District Traffic Manager.

Replace "Reserved" in section 12-4.05E with:

Chart no. 6
Complete Ramp Closure Hours/Ramp Lane Requirements

County: Contra Costa | Route/Direction: 4/EB | PM: R18.727

Closure limits: On the SB Willow Pass Rd./San Marco Blvd. "Loop" on ramp

From hour to hour	24	1	2	3	4	5	6	7	8	9	10	11	12	13	14	15	16	17	18	19	20	21	22	23	24
Mondays through Thursdays	C	C	C	C	C	C	C															C	C	C	
Fridays	C	C	C	C	C	C	C															C	C	C	
Saturdays	C	C	C	C	C	C	C	C	C													C	C	C	
Sundays	C	C	C	C	C	C	C	C	C													C	C	C	

Legend:

Delete [cut] any legend not used.
Do not use shading or crosshatching. 1/2-hour increments can be accomplished by splitting the appropriate cell.
Edit for right or left shoulder closure. Do not edit if both shoulder closures apply.

~~1~~ ~~Provide at least 1 ramp lane, not less than 11 feet in width, open in direction of travel~~

~~2~~ ~~Provide at least 2 adjacent ramp lanes open in direction of travel~~

C Ramp may be closed completely

~~S~~ ~~Shoulder closure allowed~~

~~N~~ ~~No work allowed~~

Work allowed within the highway where shoulder or lane closure is not required

REMARKS: SEE DETOUR PLAN : LOCATION NO. 6

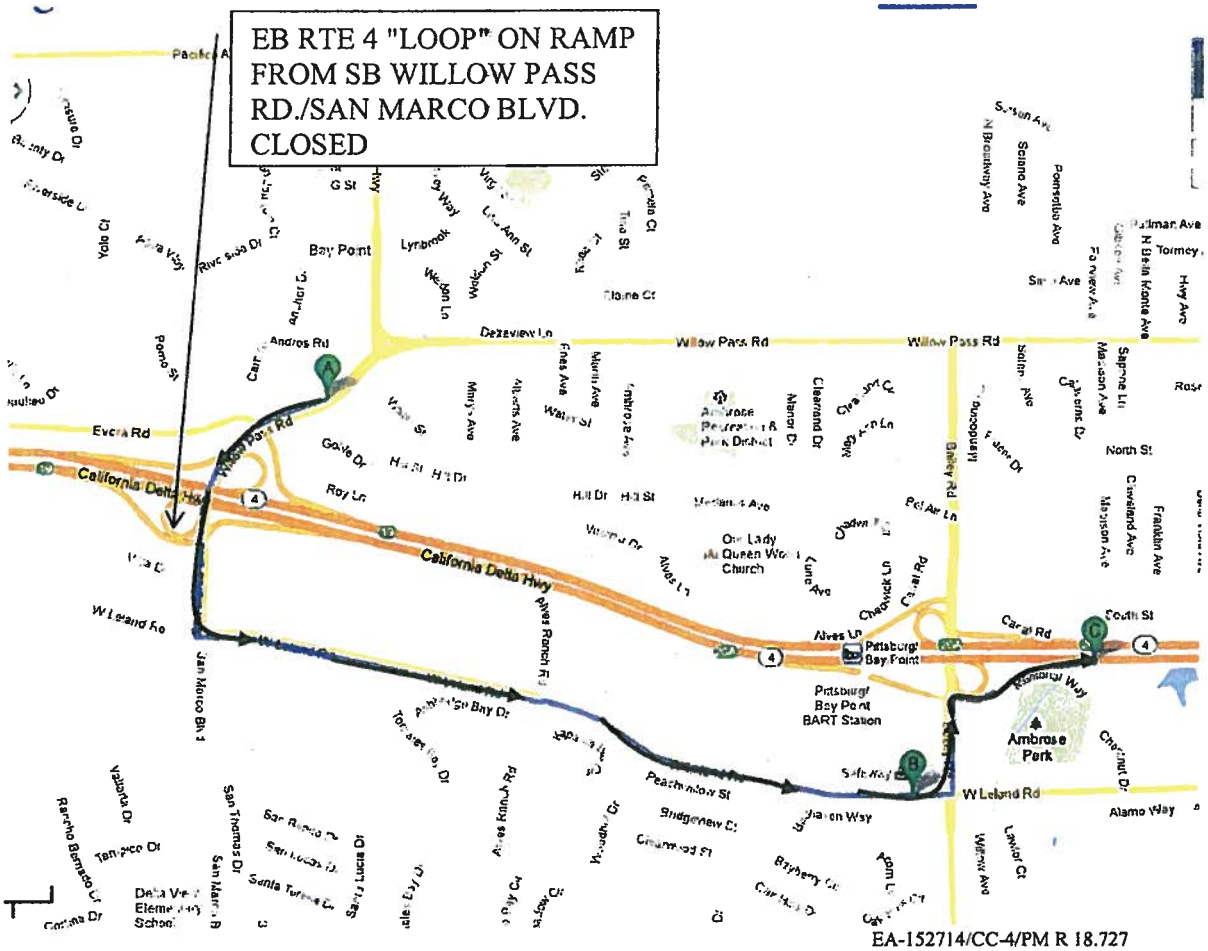

DETOUR PLAN: LOCATION NO. 6

EB RTE 4 "LOOP" ON RAMP FROM SB WILLOW PASS RD./SAN MARCO BLVD. CLOSURE

DETOUR VIA:

SB WILLOW PASS RD. TO SAN MARCO BLVD.;
EB W LELAND RD.;
NB BAILEY RD.;
ON-RAMP TO EB RTE 4

Section 12-4.05E. Use for ramp closure.

Edit the chart title and use as many charts as needed. Use "Complete Ramp Closure Hours" as the chart title for a complete ramp closure. Use "Ramp Lane Requirements" as the chart title for a lane closure on a ramp with multiple lanes. Do not duplicate the introduction (i.e., Replace "Reserved" in section . . .) for multiple charts.

Specify any detour routes or references to the applicable detour or traffic handling plans in the "REMARKS" section.

Edits do not require approval by the SSP Owner, but must be verified by the District Traffic Manager.

Replace "Reserved" in section 12-4.05E with:

Chart no. 7
Complete Ramp Closure Hours/Ramp Lane Requirements

County: Contra Costa | Route/Direction: 4/EB | PM: R18.964

Closure limits: On the NB San Marco Blvd./Willow Pass Rd. on ramp

From hour to hour	24	1	2	3	4	5	6	7	8	9	10	11	12	13	14	15	16	17	18	19	20	21	22	23	24
Mondays through Thursdays	C	C	C	C	C	C				C	C	C	C	C								C	C	C	
Fridays	C	C	C	C	C	C				C	C	C	C	C								C	C	C	
Saturdays	C	C	C	C	C	C	C	C	C	C	C	C	C	C	C	C	C	C	C	C	C	C	C	C	
Sundays	C	C	C	C	C	C	C	C	C	C	C	C	C	C	C	C	C	C	C	C	C	C	C	C	

Legend:

Delete [cut] any legend not used.
Do not use shading or crosshatching. 1/2-hour increments can be accomplished by splitting the appropriate cell.
Edit for right or left shoulder closure. Do not edit if both shoulder closures apply.

~~1~~ ~~Provide at least 1 ramp lane, not less than 11 feet in width, open in direction of travel~~

~~2~~ ~~Provide at least 2 adjacent ramp lanes open in direction of travel~~

C Ramp may be closed completely

~~S~~ ~~Shoulder closure allowed~~

~~N~~ ~~No work allowed~~

Work allowed within the highway where shoulder or lane closure is not required

REMARKS: SEE DETOUR PLAN: LOCATION NO. 8

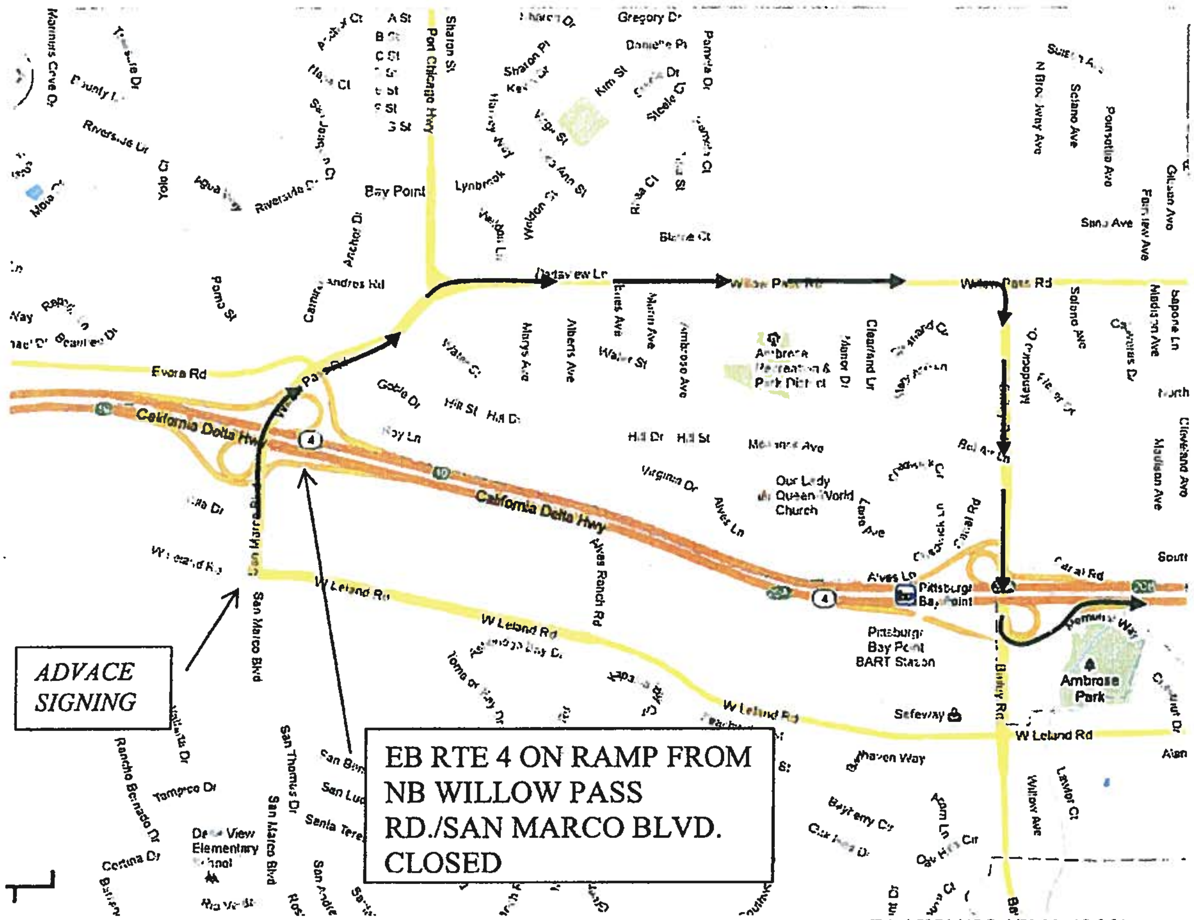

EA-152714/CC-4/PM R 18.964

DETOUR PLAN: __LOCATION NO. 8__

EB RTE 4 ON RAMP FROM NB WILLOW PASS RD./SAN MARCO BLVD. CLOSURE

__DETOUR VIA:__

NB SAN MARCO BLVD./WILLOW PASS RD.;
CONTINUE ON TO EB WILLOW PASS RD.;
SB BAILEY RD.;
ON-RAMP TO EB RTE 4

Section 12-4.05E. Use for ramp closure.

Edit the chart title and use as many charts as needed. Use "Complete Ramp Closure Hours" as the chart title for a complete ramp closure. Use "Ramp Lane Requirements" as the chart title for a lane closure on a ramp with multiple lanes. Do not duplicate the introduction (i.e., Replace "Reserved" in section . . .) for multiple charts.

Specify any detour routes or references to the applicable detour or traffic handling plans in the "REMARKS" section.

Edits do not require approval by the SSP Owner, but must be verified by the District Traffic Manager.

Replace "Reserved" in section 12-4.05E with:

Chart no. 8
Complete Ramp Closure Hours/Ramp Lane Requirements

County: Contra Costa | Route/Direction: 4/WB | PM: R16.688

Closure limits: On the Willow Pass Rd. on ramp

From hour to hour	24	1	2	3	4	5	6	7	8	9	10	11	12	13	14	15	16	17	18	19	20	21	22	23	24
Mondays through Thursdays	C	C	C	C																	C	C	C	C	
Fridays	C	C	C	C																	C	C	C	C	
Saturdays	C	C	C	C	C	C	C	C											C	C	C	C	C	C	
Sundays	C	C	C	C	C	C	C	C	C							C	C	C	C	C	C	C	C	C	

Legend:

Delete [cut] any legend not used.
Do not use shading or crosshatching. 1/2-hour increments can be accomplished by splitting the appropriate cell.
Edit for right or left shoulder closure. Do not edit if both shoulder closures apply.

~~1~~ ~~Provide at least 1 ramp lane, not less than 11 feet in width, open in direction of travel~~

~~2~~ ~~Provide at least 2 adjacent ramp lanes open in direction of travel~~

C Ramp may be closed completely

~~S~~ ~~Shoulder closure allowed~~

~~N~~ ~~No work allowed~~

Work allowed within the highway where shoulder or lane closure is not required

REMARKS: SEE DETOUR PLAN : LOCATION NO. 3

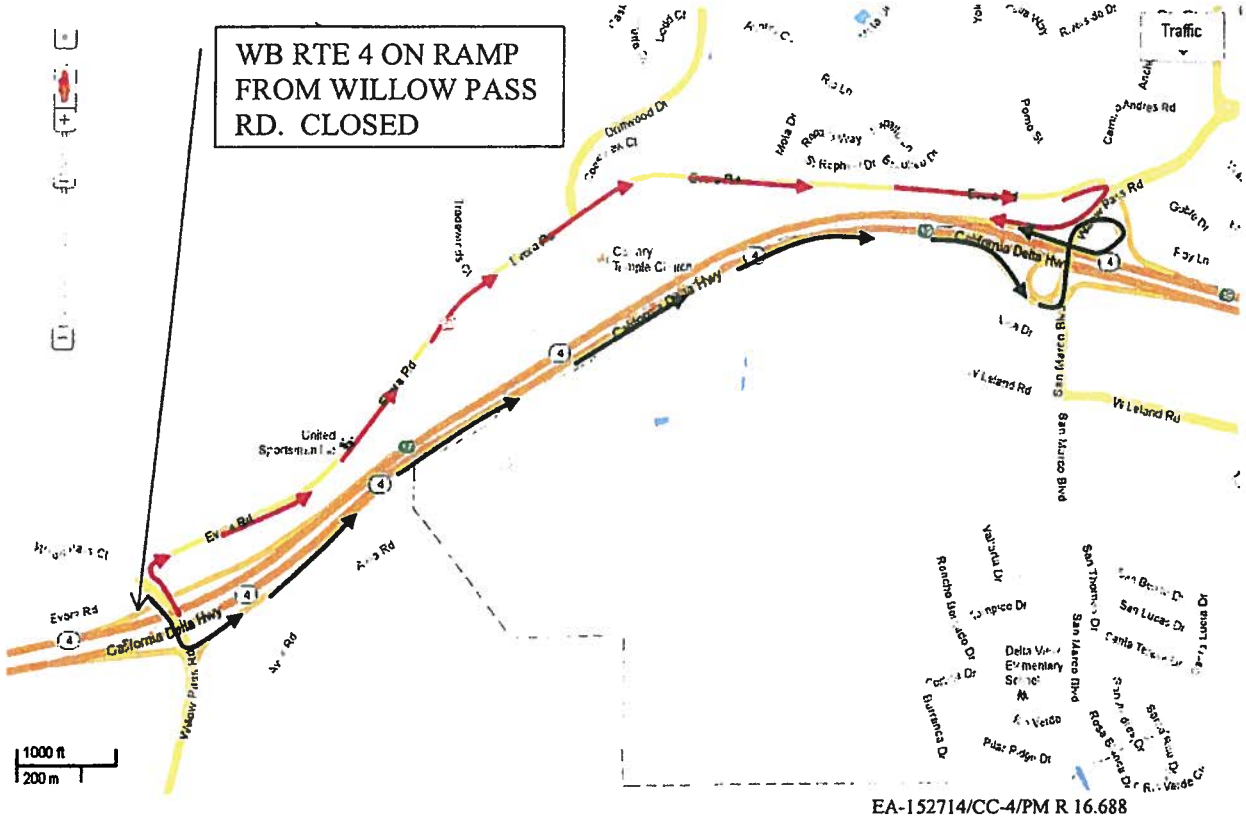

EA-152714/CC-4/PM R 16.688

DETOUR PLAN: LOCATION NO. 3

WB RTE 4 ON RAMP FROM WILLOW PASS RD. CLOSURE

<u>DETOUR</u>

TRAFFIC FROM SB WILLOW PASS RD.:
VIA:
ON RAMP TO EB RTE 4;
EB RTE 4;
OFF RAMP TO SAN MARCO BLVD.
NB SAN MARCO BLVD.;
"LOOP" ON-RAMP TO WB RTE 4

TRAFFIC FROM NB WILLOW PASS RD.:
VIA:
EB EVORA RD.;
SB WILLOW PASS RD.;
ON RAMP TO WB RTE 4

Section 12-4.05E. Use for ramp closure.

Edit the chart title and use as many charts as needed. Use "Complete Ramp Closure Hours" as the chart title for a complete ramp closure. Use "Ramp Lane Requirements" as the chart title for a lane closure on a ramp with multiple lanes. Do not duplicate the introduction (i.e., Replace "Reserved" in section . . .) for multiple charts.

Specify any detour routes or references to the applicable detour or traffic handling plans in the "REMARKS" section.

Edits do not require approval by the SSP Owner, but must be verified by the District Traffic Manager.

Replace "Reserved" in section 12-4.05E with:

Chart no. 9
Complete Ramp Closure Hours/Ramp Lane Requirements

County: Contra Costa | Route/Direction: 4/WB | PM: R18.571

Closure limits: On the SB Willow Pass Rd./San Marco Blvd. on ramp

From hour to hour	24	1	2	3	4	5	6	7	8	9	10	11	12	13	14	15	16	17	18	19	20	21	22	23	24
Mondays through Thursdays	C	C	C	C															C	C	C	C	C	C	
Fridays	C	C	C	C															C	C	C	C	C	C	
Saturdays	C	C	C	C	C	C													C	C	C	C	C	C	
Sundays	C	C	C	C	C	C	C												C	C	C	C	C	C	

Legend:

Delete [cut] any legend not used.
Do not use shading or crosshatching. 1/2-hour increments can be accomplished by splitting the appropriate cell.
Edit for right or left shoulder closure. Do not edit if both shoulder closures apply.

~~1~~ ~~Provide at least 1 ramp lane, not less than 11 feet in width, open in direction of travel~~

~~2~~ ~~Provide at least 2 adjacent ramp lanes open in direction of travel~~

C Ramp may be closed completely

~~S~~ ~~Shoulder closure allowed~~

~~N~~ ~~No work allowed~~

Work allowed within the highway where shoulder or lane closure is not required

REMARKS: SEE DETOUR PLAN: LOCATION NO. 5

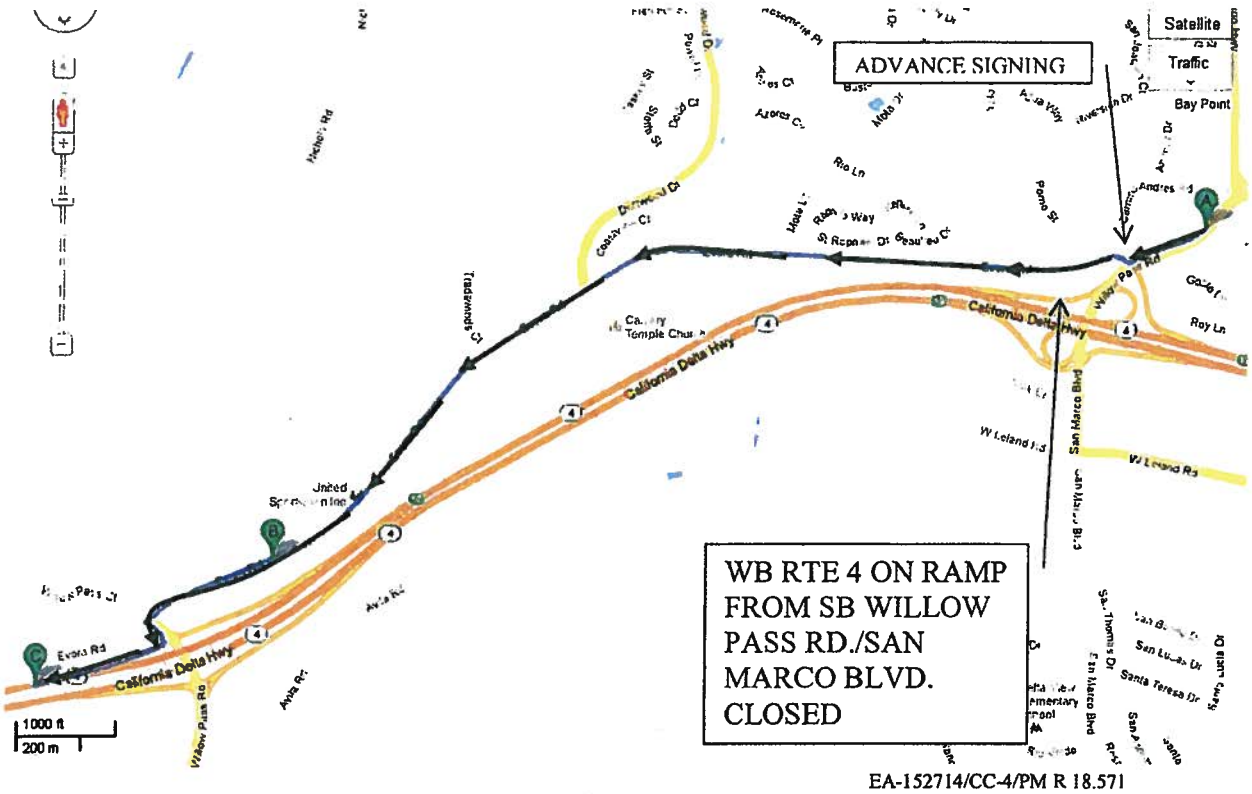

EA-152714/CC-4/PM R 18.571

DETOUR PLAN: LOCATION NO. 5

WB RTE 4 ON RAMP FROM SB WILLOW PASS RD./SAN MARCO BLVD. CLOSURE

DETOUR VIA:

SB WILLOW PASS RD./SAN MARCO BLVD.;
WB EVORA RD.;
SB WILLOW PASS RD.;
ON-RAMP TO WB RTE 4

Section 12-4.05E. Use for ramp closure.

Edit the chart title and use as many charts as needed. Use "Complete Ramp Closure Hours" as the chart title for a complete ramp closure. Use "Ramp Lane Requirements" as the chart title for a lane closure on a ramp with multiple lanes. Do not duplicate the introduction (i.e., Replace "Reserved" in section . . .) for multiple charts.

Specify any detour routes or references to the applicable detour or traffic handling plans in the "REMARKS" section.

Edits do not require approval by the SSP Owner, but must be verified by the District Traffic Manager.

Replace "Reserved" in section 12-4.05E with:

Chart no. 10
Complete Ramp Closure Hours/Ramp Lane Requirements

County: Contra Costa | Route/Direction: 4/WB | PM: R18.810

Closure limits: On the NB San Marco Blvd./Willow Pass Rd. "Loop" on ramp

From hour to hour	24	1	2	3	4	5	6	7	8	9	10	11	12	13	14	15	16	17	18	19	20	21	22	23	24
Mondays through Thursdays	C	C	C	C								C	C	C	C	C	C	C	C	C	C	C	C	C	
Fridays	C	C	C	C								C	C	C	C	C	C	C	C	C	C	C	C	C	
Saturdays	C	C	C	C	C	C	C	C	C	C	C	C	C	C	C	C	C	C	C	C	C	C	C	C	
Sundays	C	C	C	C	C	C	C	C	C	C	C	C	C	C	C	C	C	C	C	C	C	C	C	C	

Legend:

Delete [cut] any legend not used.
Do not use shading or crosshatching. 1/2-hour increments can be accomplished by splitting the appropriate cell.
Edit for right or left shoulder closure. Do not edit if both shoulder closures apply.

~~1~~ ~~Provide at least 1 ramp lane, not less than 11 feet in width, open in direction of travel~~

~~2~~ ~~Provide at least 2 adjacent ramp lanes open in direction of travel~~

C Ramp may be closed completely

~~S~~ ~~Shoulder closure allowed~~

~~N~~ ~~No work allowed~~

Work allowed within the highway where shoulder or lane closure is not required

REMARKS: SEE DETOUR PLAN: LOCATION NO. 7

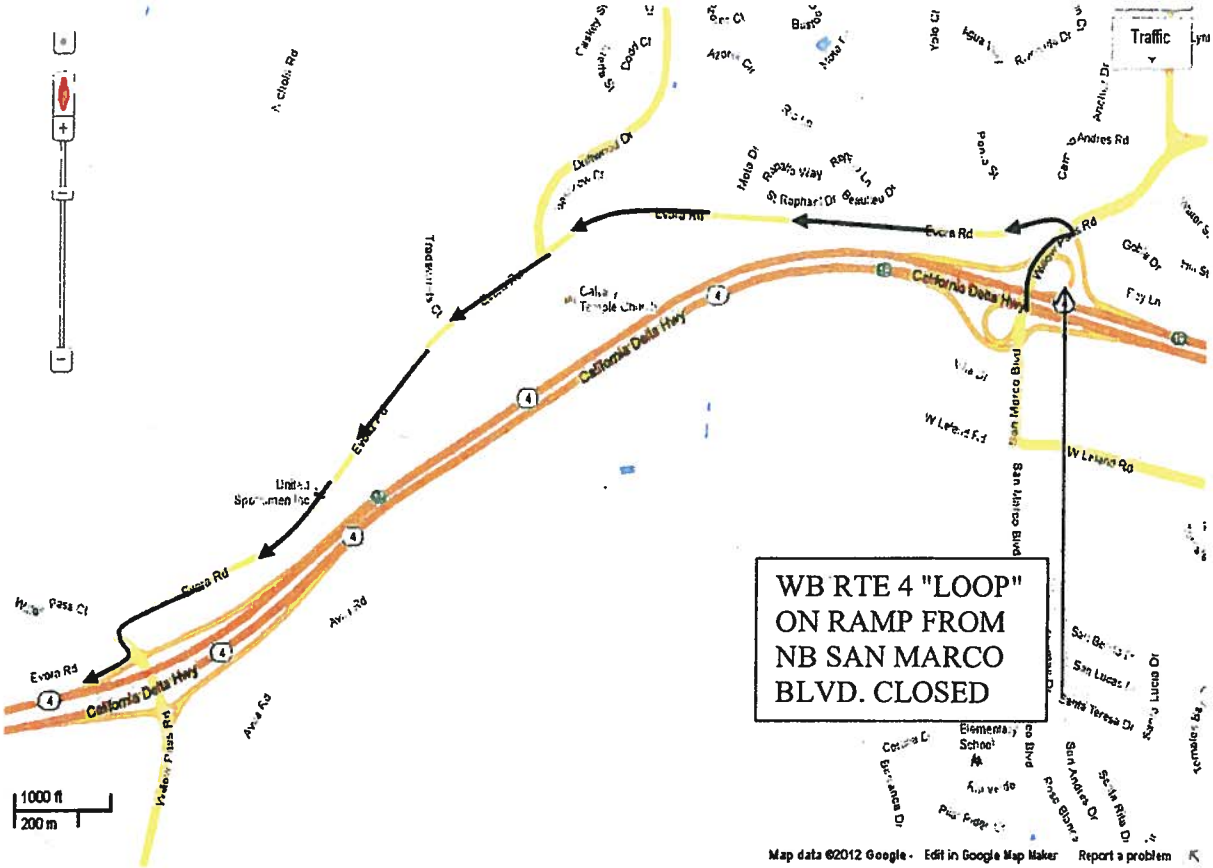

EA-152714/CC-4/PM R 18.810

DETOUR PLAN: LOCATION NO. 7

WB RTE 4 "LOOP" ON RAMP FROM NB SAN MARCO BLVD. CLOSURE

DETOUR VIA:

NB SAN MARCO BLVD.;
WB EVORA RD.;
SB WILLOW PASS RD.;
ON RAMP TO WB RTE 4

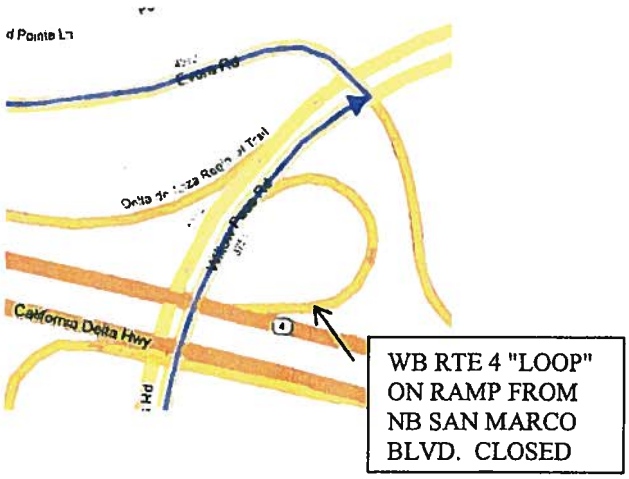

Section 12-4.05E. Use for ramp closure.

Edit the chart title and use as many charts as needed. Use "Complete Ramp Closure Hours" as the chart title for a complete ramp closure. Use "Ramp Lane Requirements" as the chart title for a lane closure on a ramp with multiple lanes. Do not duplicate the introduction (i.e., Replace "Reserved" in section . . .) for multiple charts.

Specify any detour routes or references to the applicable detour or traffic handling plans in the "REMARKS" section.

Edits do not require approval by the SSP Owner, but must be verified by the District Traffic Manager.

Replace "Reserved" in section 12-4.05E with:

Chart no. 11
Complete Ramp Closure Hours/Ramp Lane Requirements

County: Contra Costa | Route/Direction: 4/WB | PM: R19.950

Closure limits: On the Bailey Rd. on ramp

From hour to hour	24	1	2	3	4	5	6	7	8	9	10	11	12	13	14	15	16	17	18	19	20	21	22	23	24
Mondays through Thursdays	1	1	1	1																		1	1	1	
Fridays	1	1	1	1																			1	1	
Saturdays	1	1	1	1	1	1	1																1	1	
Sundays	1	1	1	1	1	1	1	1														1	1	1	

Legend:

Delete [cut] any legend not used.
Do not use shading or crosshatching. 1/2-hour increments can be accomplished by splitting the appropriate cell.
Edit for right or left shoulder closure. Do not edit if both shoulder closures apply.

1 Provide at least 1 ramp lane, not less than 11 feet in width, open in direction of travel

~~2 Provide at least 2 adjacent ramp lanes open in direction of travel~~

~~C Ramp may be closed completely~~

~~S Shoulder closure allowed~~

~~N No work allowed~~

Work allowed within the highway where shoulder or lane closure is not required

REMARKS: Location No. 9

Section 12-4.05E. Use for ramp closure.

Edit the chart title and use as many charts as needed. Use "Complete Ramp Closure Hours" as the chart title for a complete ramp closure. Use "Ramp Lane Requirements" as the chart title for a lane closure on a ramp with multiple lanes. Do not duplicate the introduction (i.e., Replace "Reserved" in section . . .) for multiple charts.

Specify any detour routes or references to the applicable detour or traffic handling plans in the "REMARKS" section.

Edits do not require approval by the SSP Owner, but must be verified by the District Traffic Manager.

Replace "Reserved" in section 12-4.05E with:

Chart no. 12
Complete Ramp Closure Hours/Ramp Lane Requirements

County: Contra Costa | Route/Direction: 4/WB | PM: R19.011

Closure limits: On the Willow Pass Rd./San Marco Blvd. Blvd. off ramp

From hour to hour	24	1	2	3	4	5	6	7	8	9	10	11	12	13	14	15	16	17	18	19	20	21	22	23	24
Mondays through Thursdays	1	1	1	1							1	1	1	1	1				1	1	1	1	1	1	
Fridays	1	1	1	1							1	1	1	1	1				1	1	1	1	1	1	
Saturdays	1	1	1	1	1	1	1	1	1	1	1	1	1	1	1	1	1	1	1	1	1	1	1	1	
Sundays	1	1	1	1	1	1	1	1	1	1	1	1	1	1	1	1	1	1	1	1	1	1	1	1	

Legend:

Delete [cut] any legend not used.
Do not use shading or crosshatching. 1/2-hour increments can be accomplished by splitting the appropriate cell.
Edit for right or left shoulder closure. Do not edit if both shoulder closures apply.

1	Provide at least 1 ramp lane, not less than 11 feet in width, open in direction of travel
~~2~~	~~Provide at least 2 adjacent ramp lanes open in direction of travel~~
~~C~~	~~Ramp may be closed completely~~
~~S~~	~~Shoulder closure allowed~~
~~N~~	~~No work allowed~~
	Work allowed within the highway where shoulder or lane closure is not required

REMARKS: Location No. 19

Section 12-4.05B. Use for multilane highways.

Edit the chart title and use as many charts as needed. Do not duplicate the introduction (i.e., Replace "Reserved" in section . . .) for multiple charts.

Edits do not require approval by the SSP Owner, but must be verified by the District Traffic Manager.

Replace "Reserved" in section 12-4.05B with:

Chart no. 13
Freeway/Expressway Lane Requirements

County: Contra Costa | Route/Direction: 242/SB | PM: 0.663/2.733

Closure limits: From Olivera Rd. on-ramp to Clayton Rd. on-ramp

From hour to hour	24	1	2	3	4	5	6	7	8	9	10	11	12	13	14	15	16	17	18	19	20	21	22	23	24
Mondays through Thursdays	1	1	1	1																2	2	2	2	1	1
Fridays	1	1	1	1																	2	2	2	2	1
Saturdays	1	1	1	1	1	2	2														2	2	2	2	2
Sundays	1	1	1	1	1	1	2	2	2											2	2	2	2	2	1

Legend:

Delete [cut] any legend not used.
Do not use shading or crosshatching. 1/2-hour increments can be accomplished by splitting the appropriate cell.
Edit for right or left shoulder closure. Do not edit if both shoulder closures apply.

1	Provide at least 1 through freeway lane open in direction of travel
2	Provide at least 2 adjacent through freeway lanes open in direction of travel
~~3~~	~~Provide at least 3 adjacent through freeway lanes open in direction of travel~~
~~4~~	~~Provide at least 4 adjacent through freeway lanes open in direction of travel~~
~~5~~	~~Provide at least 5 adjacent through freeway lanes open in direction of travel~~
~~S~~	~~Shoulder closure allowed (right / left)~~
~~N~~	~~No work allowed~~
	Work allowed within the highway where shoulder or lane closure is not required

REMARKS:

Section 12-4.05B. Use for multilane highways.

Edit the chart title and use as many charts as needed. Do not duplicate the introduction (i.e., Replace "Reserved" in section . . .) for multiple charts.

Edits do not require approval by the SSP Owner, but must be verified by the District Traffic Manager.

Replace "Reserved" in section 12-4.05B with:

Chart no. 14
Freeway/Expressway Lane Requirements

County: Contra Costa | Route/Direction: 242/NB | PM: 0.663/2.733

Closure limits: From Clayton Rd. off ramp to Olivera Rd. on ramp

From hour to hour	24	1	2	3	4	5	6	7	8	9	10	11	12	13	14	15	16	17	18	19	20	21	22	23	24
Mondays through Thursdays	1	1	1	1	1	2																	2	2	
Fridays	1	1	1	1	1	2																		2	
Saturdays	2	1	1	1	1	1	2	2														2	2	2	
Sundays	2	1	1	1	1	1	2	2	2												2	2	2	1	

Legend:

Delete [cut] any legend not used.
Do not use shading or crosshatching. 1/2-hour increments can be accomplished by splitting the appropriate cell.
Edit for right or left shoulder closure. Do not edit if both shoulder closures apply.

1	Provide at least 1 through freeway lane open in direction of travel
2	Provide at least 2 adjacent through freeway lanes open in direction of travel
~~3~~	~~Provide at least 3 adjacent through freeway lanes open in direction of travel~~
~~4~~	~~Provide at least 4 adjacent through freeway lanes open in direction of travel~~
~~5~~	~~Provide at least 5 adjacent through freeway lanes open in direction of travel~~
~~S~~	~~Shoulder closure allowed (right / left)~~
~~N~~	~~No work allowed~~
	Work allowed within the highway where shoulder or lane closure is not required

REMARKS:

Section 12-4.05E. Use for ramp closure.

Edit the chart title and use as many charts as needed. Use "Complete Ramp Closure Hours" as the chart title for a complete ramp closure. Use "Ramp Lane Requirements" as the chart title for a lane closure on a ramp with multiple lanes. Do not duplicate the introduction (i.e., Replace "Reserved" in section . . .) for multiple charts.

Specify any detour routes or references to the applicable detour or traffic handling plans in the "REMARKS" section.

Edits do not require approval by the SSP Owner, but must be verified by the District Traffic Manager.

Replace "Reserved" in section 12-4.05E with:

Chart no. 15
Complete Ramp Closure Hours/Ramp Lane Requirements

County: Contra Costa | Route/Direction: 242/SB | PM: 0.663

Closure limits: On the Clayton/Market Blvd. on ramp

From hour to hour	24	1	2	3	4	5	6	7	8	9	10	11	12	13	14	15	16	17	18	19	20	21	22	23	24
Mondays through Thursdays	1	1	1	1	1																	1	1	1	
Fridays	1	1	1	1	1																	1	1	1	
Saturdays	1	1	1	1	1	1	1	1													1	1	1	1	
Sundays	1	1	1	1	1	1	1	1	1	1										1	1	1	1	1	

Legend:

Delete [cut] any legend not used.
Do not use shading or crosshatching. 1/2-hour increments can be accomplished by splitting the appropriate cell.
Edit for right or left shoulder closure. Do not edit if both shoulder closures apply.

1	Provide at least 1 ramp lane, not less than 11 feet in width, open in direction of travel
~~2~~	~~Provide at least 2 adjacent ramp lanes open in direction of travel~~
~~C~~	~~Ramp may be closed completely~~
~~S~~	~~Shoulder closure allowed~~
~~N~~	~~No work allowed~~
	Work allowed within the highway where shoulder or lane closure is not required

REMARKS: Location No. 12

Section 12-4.05E. Use for ramp closure.

Edit the chart title and use as many charts as needed. Use "Complete Ramp Closure Hours" as the chart title for a complete ramp closure. Use "Ramp Lane Requirements" as the chart title for a lane closure on a ramp with multiple lanes. Do not duplicate the introduction (i.e., Replace "Reserved" in section . . .) for multiple charts.

Specify any detour routes or references to the applicable detour or traffic handling plans in the "REMARKS" section.

Edits do not require approval by the SSP Owner, but must be verified by the District Traffic Manager.

Replace "Reserved" in section 12-4.05E with:

Chart no. 16
Complete Ramp Closure Hours/Ramp Lane Requirements

County: Contra Costa | Route/Direction: 242/SB | PM: 1.457

Closure limits: On the Concord Ave. on ramp

From hour to hour	24	1	2	3	4	5	6	7	8	9	10	11	12	13	14	15	16	17	18	19	20	21	22	23	24
Mondays through Thursdays	1	1	1	1	1																1	1	1	1	
Fridays	1	1	1	1	1																1	1	1	1	
Saturdays	1	1	1	1	1	1	1	1											1	1	1	1	1	1	
Sundays	1	1	1	1	1	1	1	1	1	1								1	1	1	1	1	1	1	

Legend:

Delete [cut] any legend not used.
Do not use shading or crosshatching. 1/2-hour increments can be accomplished by splitting the appropriate cell.
Edit for right or left shoulder closure. Do not edit if both shoulder closures apply.

1	Provide at least 1 ramp lane, not less than 11 feet in width, open in direction of travel
~~2~~	~~Provide at least 2 adjacent ramp lanes open in direction of travel~~
~~C~~	~~Ramp may be closed completely~~
~~S~~	~~Shoulder closure allowed~~
~~N~~	~~No work allowed~~
	Work allowed within the highway where shoulder or lane closure is not required

REMARKS: Location No. 13

Section 12-4.05E. Use for ramp closure.

Edit the chart title and use as many charts as needed. Use "Complete Ramp Closure Hours" as the chart title for a complete ramp closure. Use "Ramp Lane Requirements" as the chart title for a lane closure on a ramp with multiple lanes. Do not duplicate the introduction (i.e., Replace "Reserved" in section . . .) for multiple charts.

Specify any detour routes or references to the applicable detour or traffic handling plans in the "REMARKS" section.

Edits do not require approval by the SSP Owner, but must be verified by the District Traffic Manager.

Replace "Reserved" in section 12-4.05E with:

Chart no. 17
Complete Ramp Closure Hours/Ramp Lane Requirements

County: Contra Costa | Route/Direction: 242/SB | PM: 2.046

Closure limits: On the Solano Way/Grant St. on ramp

From hour to hour	24	1	2	3	4	5	6	7	8	9	10	11	12	13	14	15	16	17	18	19	20	21	22	23	24
Mondays through Thursdays	1	1	1	1	1																1	1	1	1	
Fridays	1	1	1	1	1																1	1	1	1	
Saturdays	1	1	1	1	1	1	1													1	1	1	1	1	
Sundays	1	1	1	1	1	1	1	1	1									1	1	1	1	1	1	1	

Legend:

Delete [cut] any legend not used.
Do not use shading or crosshatching. 1/2-hour increments can be accomplished by splitting the appropriate cell.
Edit for right or left shoulder closure. Do not edit if both shoulder closures apply.

1 Provide at least 1 ramp lane, not less than 11 feet in width, open in direction of travel

~~2 Provide at least 2 adjacent ramp lanes open in direction of travel~~

~~C Ramp may be closed completely~~

~~S Shoulder closure allowed~~

~~N No work allowed~~

Work allowed within the highway where shoulder or lane closure is not required

REMARKS: Location No. 15

Section 12-4.05E. Use for ramp closure.

Edit the chart title and use as many charts as needed. Use "Complete Ramp Closure Hours" as the chart title for a complete ramp closure. Use "Ramp Lane Requirements" as the chart title for a lane closure on a ramp with multiple lanes. Do not duplicate the introduction (i.e., Replace "Reserved" in section . . .) for multiple charts.

Specify any detour routes or references to the applicable detour or traffic handling plans in the "REMARKS" section.

Edits do not require approval by the SSP Owner, but must be verified by the District Traffic Manager.

Replace "Reserved" in section 12-4.05E with:

Chart no. 18
Complete Ramp Closure Hours/Ramp Lane Requirements

County: Contra Costa | Route/Direction: 242/SB | PM: 2.732 & 2.733

Closure limits: On the WB or EB Olivera Rd. on-ramps

From hour to hour	24	1	2	3	4	5	6	7	8	9	10	11	12	13	14	15	16	17	18	19	20	21	22	23	24
Mondays through Thursdays	C	C	C	C	C																	C	C	C	
Fridays	C	C	C	C	C																	C	C	C	
Saturdays	C	C	C	C	C	C	C	C													C	C	C	C	
Sundays	C	C	C	C	C	C	C	C	C											C	C	C	C	C	

Legend:

Delete [cut] any legend not used.
Do not use shading or crosshatching. 1/2-hour increments can be accomplished by splitting the appropriate cell.
Edit for right or left shoulder closure. Do not edit if both shoulder closures apply.

~~1~~ ~~Provide at least 1 ramp lane, not less than 11 feet in width, open in direction of travel~~

~~2~~ ~~Provide at least 2 adjacent ramp lanes open in direction of travel~~

C Ramp may be closed completely

~~S~~ ~~Shoulder closure allowed~~

~~N~~ ~~No work allowed~~

Work allowed within the highway where shoulder or lane closure is not required

REMARKS: See DETOUR PLAN : LOCATION NO. 17 or 18

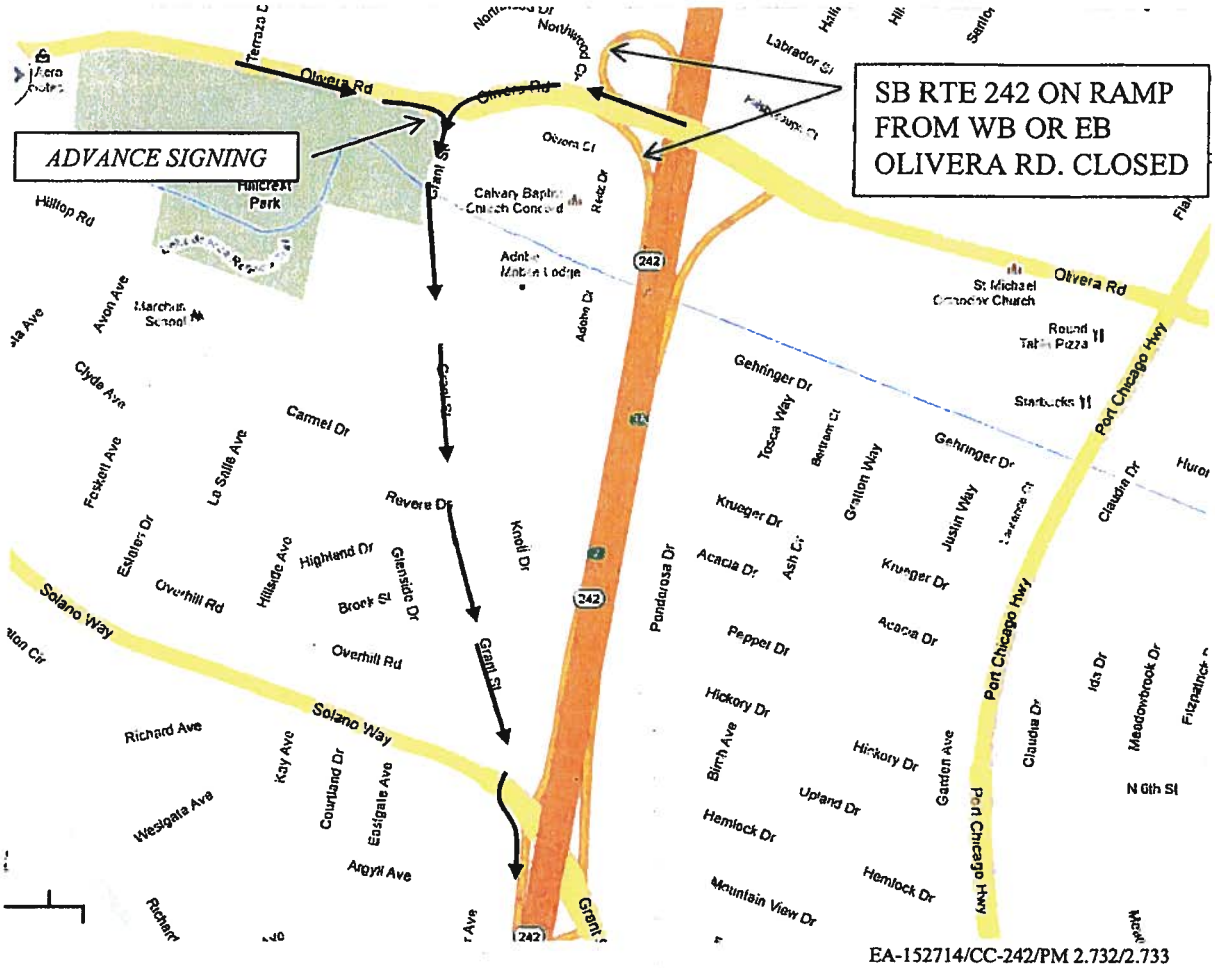

DETOUR PLAN: LOCATION NO. 17 OR 18

SB RTE 242 ON RAMP FROM WB OR EB OLIVERA RD. CLOSURE

DETOUR VIA:

WB OR EB OLIVERA RD.;
SB GRANT ST.;
EB SOLANO WAY;
ON-RAMP TO SB RTE 242

Section 12-4.05E. Use for ramp closure.

Edit the chart title and use as many charts as needed. Use "Complete Ramp Closure Hours" as the chart title for a complete ramp closure. Use "Ramp Lane Requirements" as the chart title for a lane closure on a ramp with multiple lanes. Do not duplicate the introduction (i.e., Replace "Reserved" in section . . .) for multiple charts.

Specify any detour routes or references to the applicable detour or traffic handling plans in the "REMARKS" section.

Edits do not require approval by the SSP Owner, but must be verified by the District Traffic Manager.

Replace "Reserved" in section 12-4.05E with:

Chart no. 19
Complete Ramp Closure Hours/Ramp Lane Requirements

County: Contra Costa | Route/Direction: 242/NB | PM: 2.274

Closure limits: On the Solano Way/Grant St. on ramp

From hour to hour	24	1	2	3	4	5	6	7	8	9	10	11	12	13	14	15	16	17	18	19	20	21	22	23	24
Mondays through Thursdays	C	C	C	C	C	C																C	C	C	
Fridays	C	C	C	C	C	C																C	C	C	
Saturdays	C	C	C	C	C	C	C	C	C											C	C	C	C	C	
Sundays	C	C	C	C	C	C	C	C	C										C	C	C	C	C	C	

Legend:

Delete [cut] any legend not used.
Do not use shading or crosshatching. 1/2-hour increments can be accomplished by splitting the appropriate cell.
Edit for right or left shoulder closure. Do not edit if both shoulder closures apply.

~~1~~ ~~Provide at least 1 ramp lane, not less than 11 feet in width, open in direction of travel~~

~~2~~ ~~Provide at least 2 adjacent ramp lanes open in direction of travel~~

C Ramp may be closed completely

~~S~~ ~~Shoulder closure allowed~~

~~N~~ ~~No work allowed~~

Work allowed within the highway where shoulder or lane closure is not required

REMARKS: See DETOUR PLAN: LOCATION NO. 16

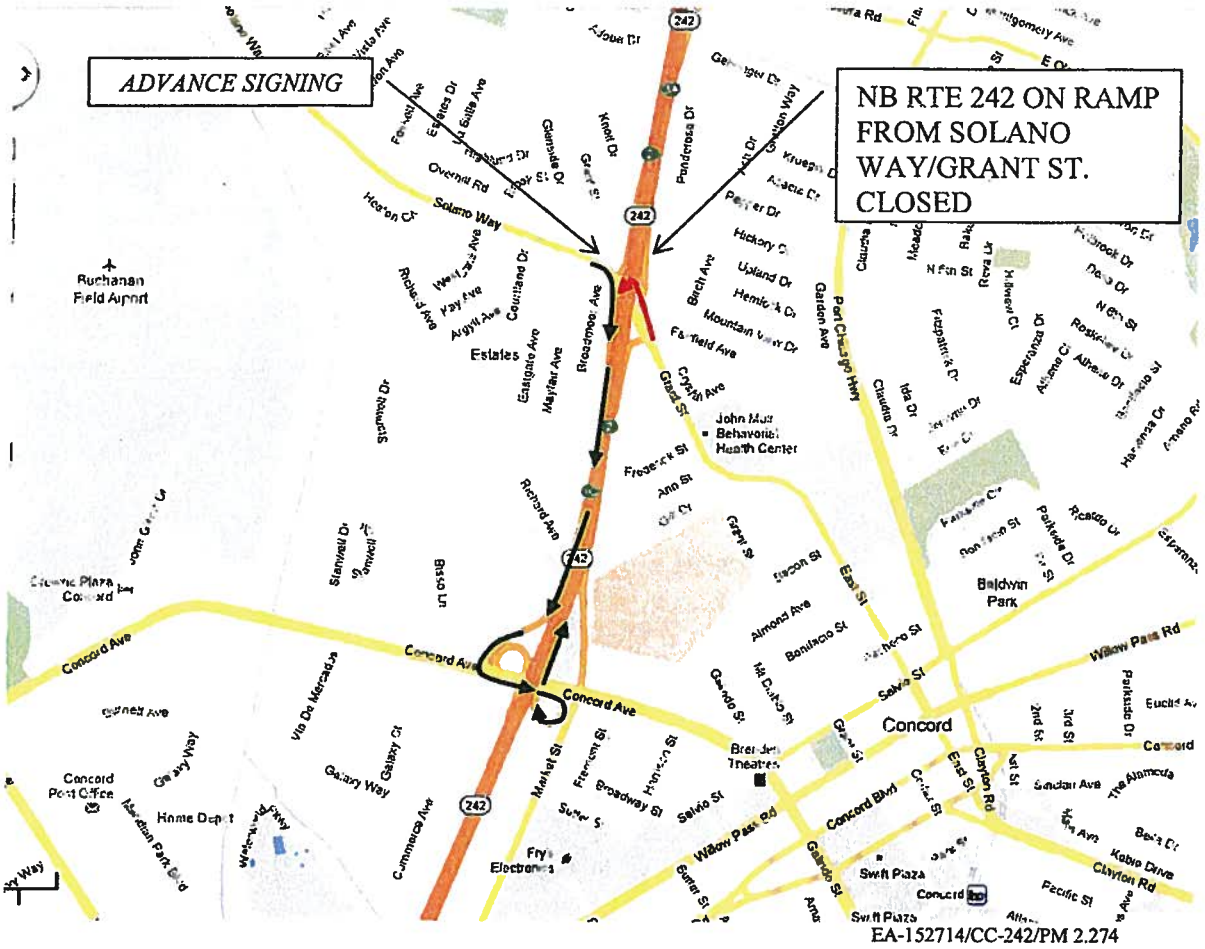

DETOUR PLAN: LOCATION NO. 16

NB RTE 242 ON RAMP FROM SOLANO WAY/GRANT ST. CLOSURE

DETOUR VIA:

EB SOLANO WAY/ WB GRANT ST.;
ON RAMP TO SB RTE 242;
SB RTE 242;
OFF RAMP TO CONCORD AVE.;
EB CONCORD AVE.;
"LOOP" ON-RAMP TO NB RTE 242

Attached you will find our recommended lane closure hours and detours for this project. Since these charts are not intended for PS&E, they may not be in a typical format or normal Style ordinarily use.

MAINLINE - ON ROUTE 4
Chart No. 1 - Eastbound - From Solano Way on-ramp to Railroad Ave. on-ramp
Chart No. 2 - Westbound - From Railroad on-ramp to Solano Way on-ramp

RAMPS - ROUTE 4 - EASTBOUND
Chart No. 3 - Location 1 - On the Solano Way on ramp
Chart No. 4 - Location 2 - On the Port Chicago Hwy "Loop" on ramp
Chart No. 4a - Location 2a - On the NB Port Chicago Hwy on ramp
Chart No. 4b - Location 2b - On the Port Chicago Hwy collector on ramp
Chart No. 5 - Location 4 - On the Willow Pass Rd. on ramp
Chart No. 6 - Location 6 - On the SB Willow Pass Rd./San Marco Blvd. "Loop" on ramp
Chart No. 7 - Location 8 - On the NB Willow Pass Rd./San Marco Blvd. "Loop" on ramp

RAMPS - ROUTE 4 - WESTBOUND
Chart No. 8 - Location 3 - On the Willow Pass Rd. on ramp
Chart No. 9 - Location 5 - On the SB Willow Pass Rd./San Marco Blvd. on ramp
Chart No. 10 - Location 7 - On the NB Willow Pass Rd./San Marco Blvd. "Loop" on ramp
Chart No. 11 - Location 9 - On the Bailey Rd. on-ramp
Chart No. 12 - Location 19 - On the Willow Pass Rd./San Marco Blvd. off ramp

MAINLINE - ON ROUTE 242
Chart No. 13 - Southbound - From Olivera Rd. on-ramp to Clayton Rd. on ramp
Chart No. 14 - Northbound - From Clayton Rd. off ramp to Olivera Rd. on ramp

RAMPS - ROUTE 242 - SOUTHBOUND
Chart No. 15 - Location 12 - On the Clayton Rd./Market Blvd. on ramp
Chart No. 16 - Location 13 - On the Concord Ave. on ramp
Chart No. 17 - Location 15 - On the Solano Way/Grant St. on ramp
Chart No. 18 - Location 17 or 18 - On the WB or EB Olivera Rd. on ramps

CONTRA COSTA - ROUTE 242 - NORTHBOUND
Chart No. 19 - Location 16 - On the Solano Way/Grant St. on ramp

Attachments:

cc4_all.pdf cc242_all.pdf