DIST.	COUNTY	ROUTE	POST MILES TOTAL PROJECT	SHEET NO.	TOTAL SHEETS
04	Ala	80	2.0/2.3	43	83

REGISTERED ARCHITECT — DATE 06/26/2012

PLANS APPROVAL DATE

STATE OF CALIFORNIA — SCOTT L. DANIELSON — 6/30/2013 — CERTIFICATE NO. C 61248 — REGISTERED ARCHITECT

The State of California or its officers or agents shall not be responsible for the accuracy or completeness of electronic copies of this plan sheet.

Parsons Brinckerhoff Inc.
303 Second Street, Suite 700N
San Francisco, CA 94107

Bay Area Toll Authority
101 Eight Street
Oakland, CA 94607

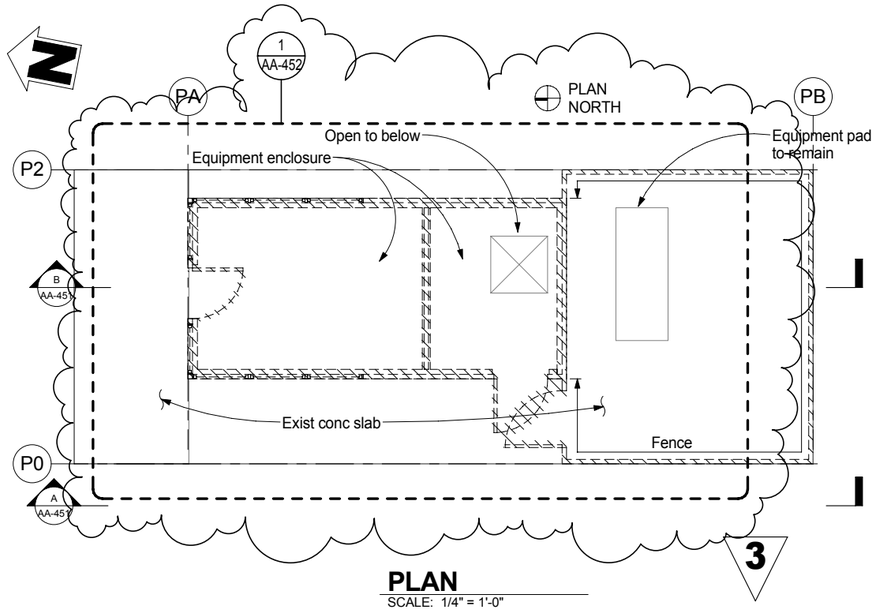

PLAN
SCALE: 1/4" = 1'-0"

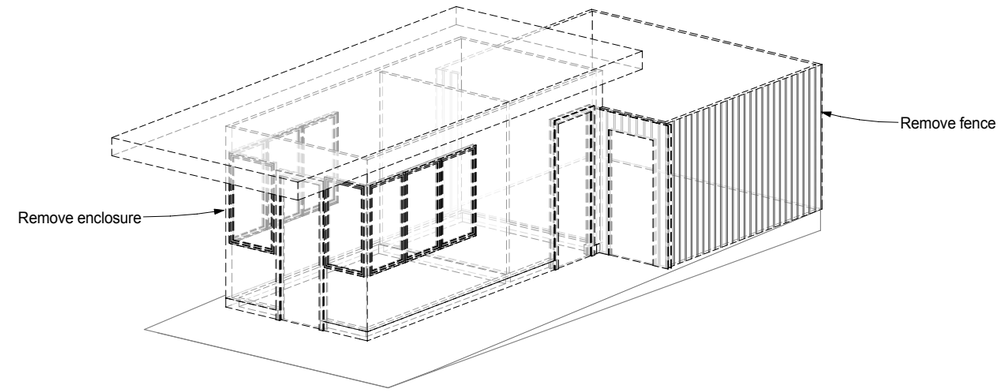

ISOMETRIC VIEW
SCALE:

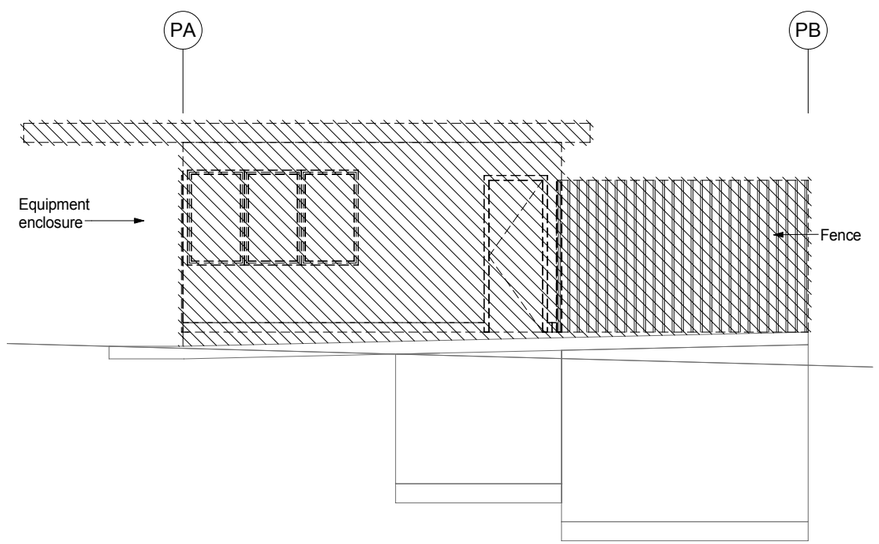

A WEST ELEVATION
SCALE: 1/4" = 1'-0"

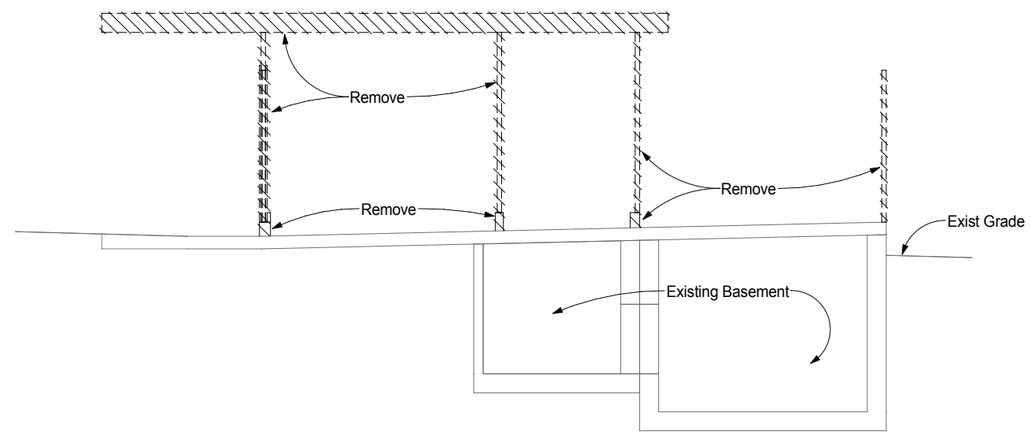

B SECTION
SCALE: 1/4" = 1'-0"

LEGEND:

- Existing to be removed
- Existing to Remain

DEMOLITION NOTES:

1. Remove completely existing walls, curbs, doors, gates, roofs, fences, and other portions of the equipment enclosure to form a smooth surface of the existing concrete slab.
2. Existing concrete slab and pumps shall remain.
3. All existing electrical panels, j-boxes, conduit, switches, fixtures, and other parts of the electrical system shall remain.
4. Provide temporary support for all equipment in note 3. above.

3 REVISED PER ADDENDUM No. 3 DATED AUGUST 20, 2012

AA-451

DESIGN	BY B. Howell	CHECKED S. Danielson	
DETAILS	BY L. Reyes	CHECKED R. Howell	
QUANTITIES	BY	CHECKED	

PREPARED FOR THE STATE OF CALIFORNIA DEPARTMENT OF TRANSPORTATION

PROJECT ENGINEER

BRIDGE NO.

POST MILE

SFOBB TOLL PLAZA CANOPY RENOVATIONS
PUMP STATION - DEMOLITION

DESIGN GENERAL PLAN SHEET (ENGLISH) (REV. 06-01-09)

ORIGINAL SCALE IN INCHES FOR REDUCED PLANS 0 1 2 3

CU BATA011
EA 4G2801/4G2901

DISREGARD PRINTS BEARING EARLIER REVISION DATES

REVISION DATES (PRELIMINARY STAGE ONLY) -

SHEET 24 OF 64

C:\Documents and Settings\reyesl\My Documents\SFOBB-Canopy-Arch_reyesl.rvt

8/15/2012 10:03:36 AM

DIST.	COUNTY	ROUTE	POST MILES TOTAL PROJECT	SHEET NO.	TOTAL SHEETS
04	Ala	80	2.0/2.3	43A	83

REGISTERED ARCHITECT — DATE 07/31/2012

PLANS APPROVAL DATE

STATE OF CALIFORNIA — SCOTT L. DANIELSON — 6/30/2013 — CERTIFICATE NO. C 61148 — REGISTERED ARCHITECT

The State of California or its officers or agents shall not be responsible for the accuracy or completeness of electronic copies of this plan sheet.

Parsons Brinckerhoff Inc.
303 Second Street, Suite 700N
San Francisco, CA 94107

Bay Area Toll Authority
101 Eight Street
Oakland, CA 94607

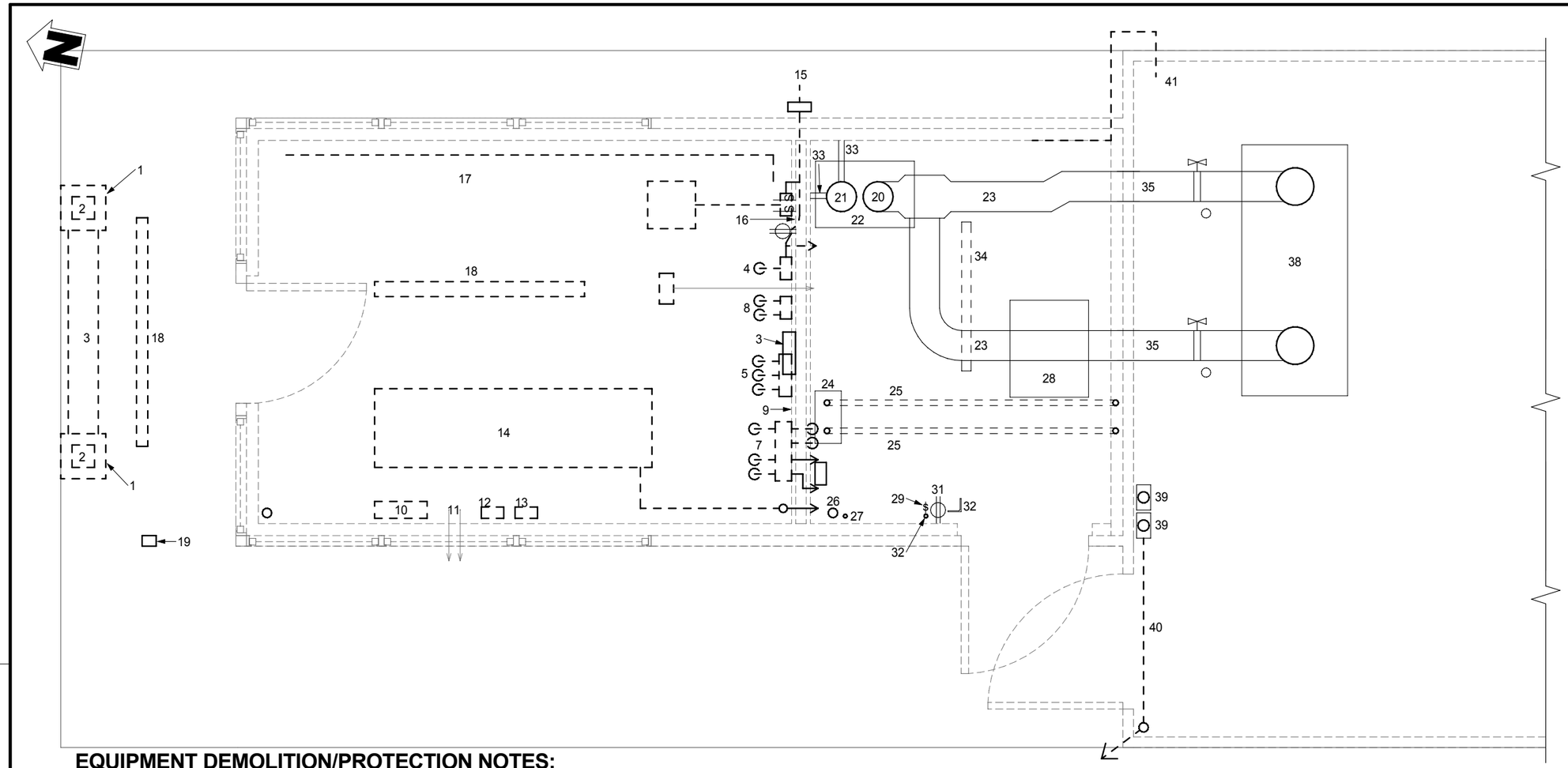

EQUIPMENT DEMOLITION/PROTECTION NOTES:

LEGEND:

(CT) Client to remove/Contractor to patch to match adjacent surfaces.
(P) Contractor to protect, maintain operability, and incorporate in the new work.
(D) Contractor to demolish and remove.

Vertical Conduit

Electrical Outlet

$ Eletrical Switch

NOTES:

1. Remove existing sheet metal equipment covers – patch concrete. **(CT)**
2. 8"x8" holes to below – cut concrete to embed 2-#4 rebars 3" o.c. ea. way and patch hole. **(P)**
3. Remove existing bench – patch concrete. **(CT)**
4. Wall mounted disconnect (6 ¾"w x11 ¼"h x 4 ½"d) with one conduit to floor & one conduit to item ?. **(CT)**
5. Wall mounted breaker panel (11 ¾"w x8 ¼"h x 4 ½"d) with three conduits to floor & one conduit to item. **(CT)**
6. Wall mounted disconnect panel (1e5"w x 17"h x5"d) with one conduit to item 7. **(CT)**
7. Wall mounted air compressor panel (20"w x 23"h x 4 ¾"d) with two upper conduits on wall to ceiling, two conduits through wall, and three conduits to floor. **(CT)**
8. Wall mounted phone jack with two conduits on wall, and one conduit to floor. **(CT)**
9. Wall mounted triple switch at breaker, at item. **(CT)**
10. Wall mounted disconnect for air compressor. **(CT)**
11. Compressor lines through wall. **(CT)**
12. Wall mounted fan. **(CT)**
13. Wall mounted junction box. **(CT)**
14. Air compressor. **(CT)**
15. Exterior switch. **(CT)**
16. Wall mounted heater. **(CT)**
17. Empty ½ dia. Conduit. **(CT)**
18. Existing light at ceiling. **(CT)**
19. Existing photo cell at roof. **(D)**
20. 13" dia. Line – clean and paint. **(P)**
21. 8" dia. Pipe – clean and paint. **(P)**
22. Split metal plate at floor opening to below – clean and paint. **(P)**
23. 8 ½" dia. Line to exterior – clean and paint. **(P)**
24. Electrical control panel and disconnects – Add a brace to the wall. **(P)**
25. Existing conduits & lines to ceiling and at south wall. Remove and re-install at new roof deck. **(P)**
26. 2 ½" dia. Conduit from floor to electrical panel. **(P)**
27. 1" dia. Conduit from floor to electrical panel. **(P)**
28. Metal hatch at opening (22" x 22 ¼" metal hatch at opening – clean & paint. **(P)**
29. Wall mounted Switch. **(CT)**
30. Vertical conduit on wall 2" h.**(CT)**
31. Electrical outlet on wall. **(CT)**
32. Steel angle (2 x 2) projecting from floor – cut flush with floor and paint. **(D)**
33. Pipe braces – existing. **(P)**
34. Existing light at ceiling. **(CT)**
35. 8 ½" lines through wall to pumps. **(P)**
36. 2 ½" dia. Conduit to below. **(P)**
37. Vertically mounted pumps. **(P)**
38. Concrete pad for pumps. **(P)**
39. Wall mounted disconnects(8 ½"w x 15"h x 4 ½" d) and switches, with conduit to below. **(P)**
40. Air compressor line through wall under roof, vertical at fence, to underground route to adjacent building. **(CT)**
41. Air compressor line, through wall at roof, vertical at fence, through fence to outlet. **(CT)**

3 REVISED PER ADDENDUM No. 3 DATED _____
AUGUST 20, 2012

AA-452

DESIGN	BY R. Howell	CHECKED S. Danielson	
DETAILS	BY L. Reyes	CHECKED R. Howell	
QUANTITIES	BY	CHECKED	

PREPARED FOR THE STATE OF CALIFORNIA DEPARTMENT OF TRANSPORTATION

PROJECT ENGINEER

BRIDGE NO. _____
POST MILE _____

SFOBB TOLL PLAZA CANOPY RENOVATIONS
PUMP STN - DIAGRAMATIC DEMOLITION DETAILS

DESIGN GENERAL PLAN SHEET (ENGLISH) (REV. 06-01-09)

ORIGINAL SCALE IN INCHES FOR REDUCED PLANS 0 1 2 3

CU BATA011
EA 4G2801/4G2901

DISREGARD PRINTS BEARING EARLIER REVISION DATES

REVISION DATES (PRELIMINARY STAGE ONLY) -

SHEET 24A OF 64

C:\Documents and Settings\reyesl\My Documents\SFOBB-Canopy-Arch_reyesl.rvt

8/15/2012 10:07:53 AM

DIST.	COUNTY	ROUTE	POST MILES TOTAL PROJECT	SHEET NO.	TOTAL SHEETS
04	Ala	80	2.0/2.3	48	83

REGISTERED ARCHITECT — DATE 06/26/2012

PLANS APPROVAL DATE

STATE OF CALIFORNIA — SCOTT L. DANIELSON — 6/30/2013 — CERTIFICATE NO. C 61248 — REGISTERED ARCHITECT

The State of California or its officers or agents shall not be responsible for the accuracy or completeness of electronic copies of this plan sheet.

Parsons Brinckerhoff Inc.
303 Second Street, Suite 700N
San Francisco, CA 94107

Bay Area Toll Authority
101 Eight Street
Oakland, CA 94607

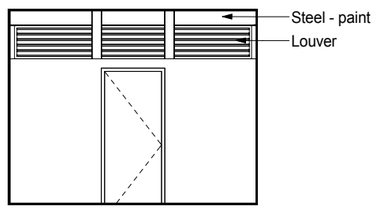

1 NORTH ELEVATION
SCALE: 1/4" = 1'-0"

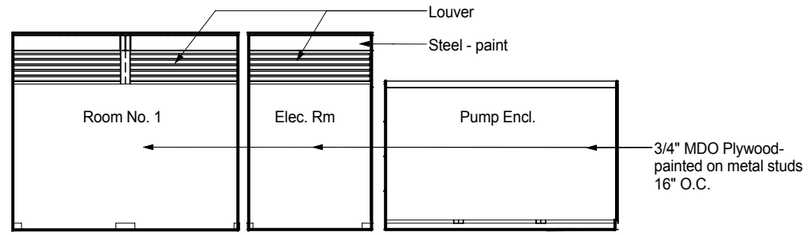

2 EAST ELEVATION
SCALE: 1/4" = 1'-0"

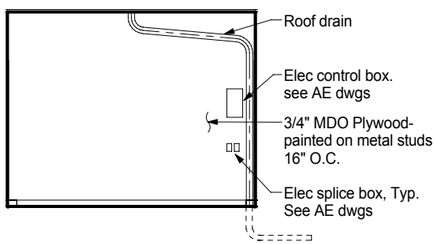

3 SOUTH ELEVATION
SCALE: 1/4" = 1'-0"

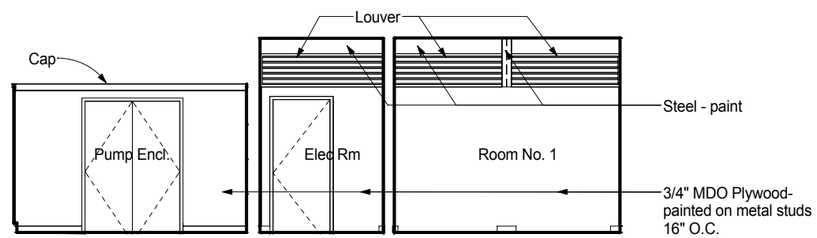

4 WEST ELEVATION
SCALE: 1/4" = 1'-0"

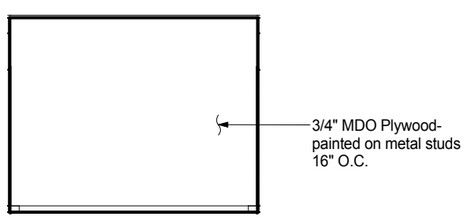

5 ELEC. RM. NORTH ELEVATION
SCALE: 1/4" = 1'-0"

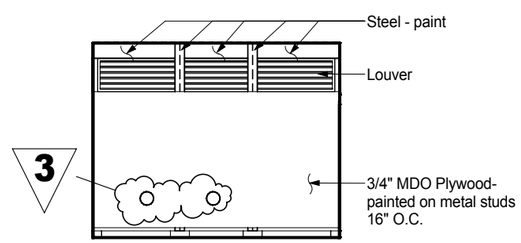

6 ELEC. RM SOUTH ELEVATION
SCALE: 1/4" = 1'-0"

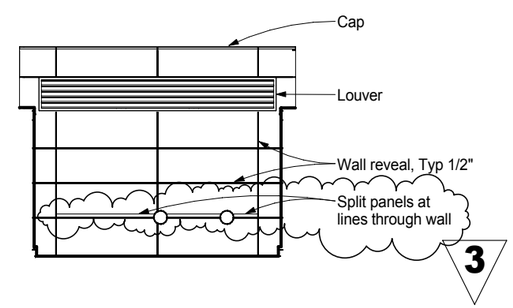

7 PUMP ENCL. NORTH ELEVATION
SCALE: 1/4" = 1'-0"

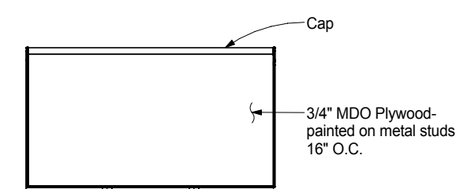

8 PUMP ENCL. SOUTH ELEVATION
SCALE: 1/4" = 1'-0"

3 REVISED PER ADDENDUM No. 3 DATED AUGUST 20, 2012

AA-505

DESIGN	BY R. Howell	CHECKED S. Danielson	
DETAILS	BY Z. Sadat	CHECKED R. Howell	
QUANTITIES	BY	CHECKED	

PREPARED FOR THE STATE OF CALIFORNIA DEPARTMENT OF TRANSPORTATION

PROJECT ENGINEER

BRIDGE NO.

POST MILE

SFOBB TOLL PLAZA CANOPY RENOVATIONS
PUMP STATION INTERIOR ELEVATIONS

DESIGN GENERAL PLAN SHEET (ENGLISH) (REV. 06-01-09)

ORIGINAL SCALE IN INCHES FOR REDUCED PLANS 0 1 2 3

CU BATA011
EA 4G2801/4G2901

DISREGARD PRINTS BEARING EARLIER REVISION DATES

REVISION DATES (PRELIMINARY STAGE ONLY) -

SHEET 29 OF 64

C:\Documents and Settings\reyesl\My Documents\SFOBB-Canopy-Arch_reyesl.rvt

8/15/2012 10:12:29 AM

DIST.	COUNTY	ROUTE	POST MILES TOTAL PROJECT	SHEET NO.	TOTAL SHEETS
04	Ala	80	2.0/2.3	52	83

REGISTERED ARCHITECT — DATE 06/26/2012

PLANS APPROVAL DATE

STATE OF CALIFORNIA — SCOTT L. DANIELSON — CERTIFICATE NO. C 61348 — 6/30/2013 — REGISTERED ARCHITECT

The State of California or its officers or agents shall not be responsible for the accuracy or completeness of electronic copies of this plan sheet.

Parsons Brinckerhoff Inc.
303 Second Street, Suite 700N
San Francisco, CA 94107

Bay Area Toll Authority
101 Eight Street
Oakland, CA 94607

REVISED PER ADDENDUM No. 3 DATED AUGUST 20, 2012

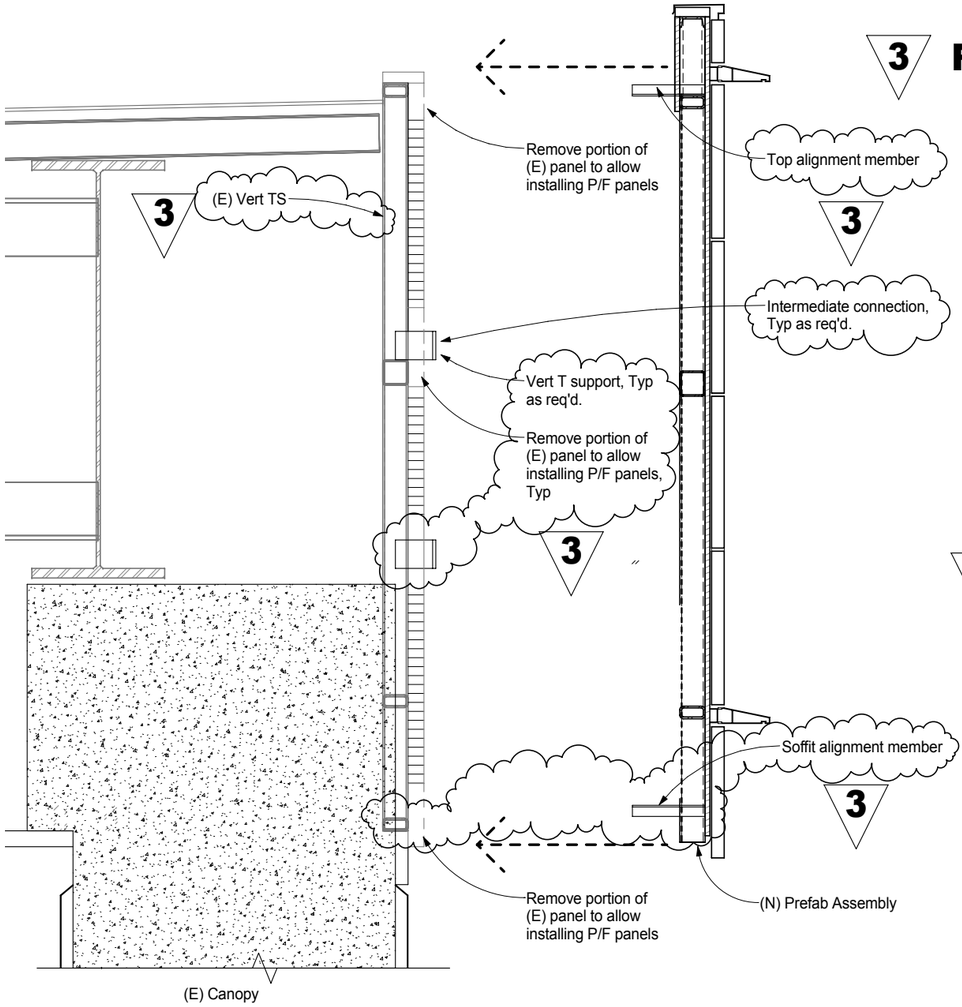

EXPLODED SECTION - OPTIONAL PREFABRICATED SYSTEM

SCALE: 1" = 1'-0"

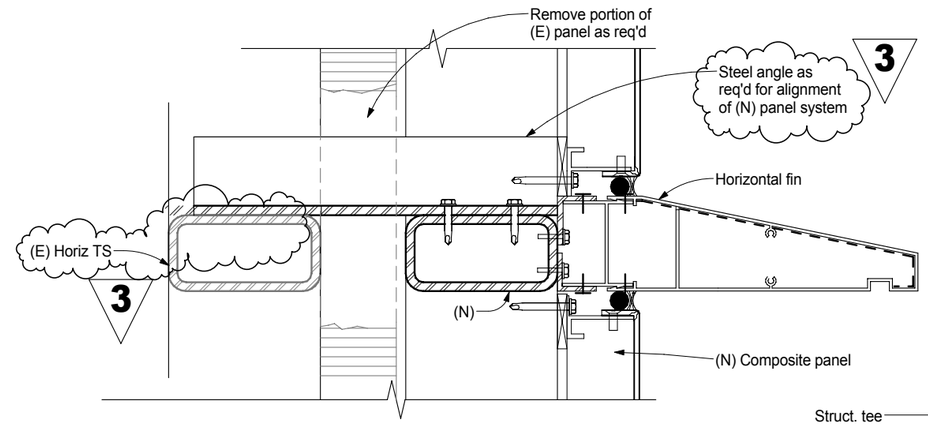

TYP. SECTION - TOP

SCALE: 6" = 1'-0"

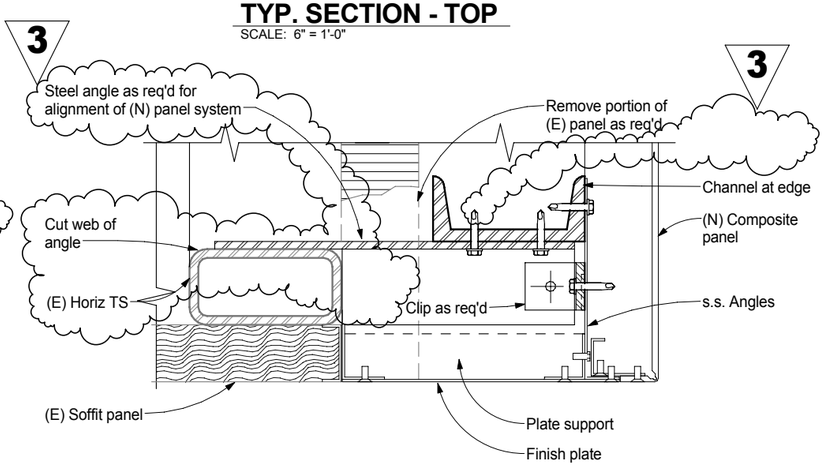

TYP SECTION AT SOFFIT

SCALE: 6" = 1'-0"

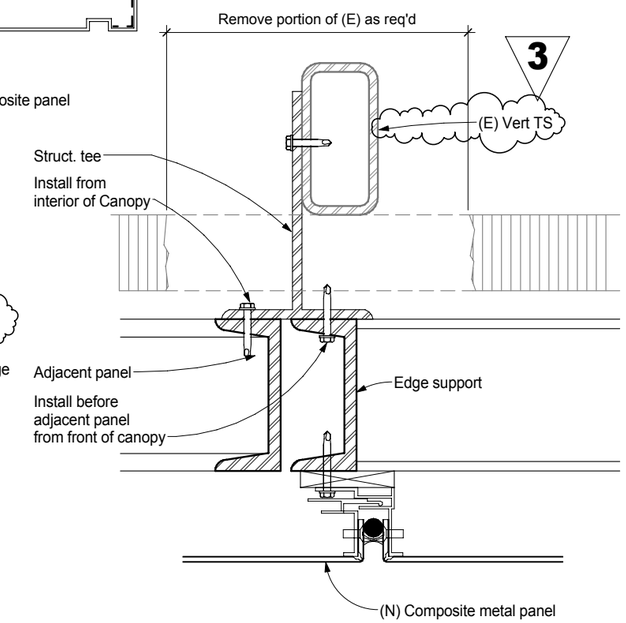

TYP. PLAN - INTERMEDIATE CONNECTION

SCALE: 6" = 1'-0"

OPTIONAL PREFABRICATED NOTES:

1. A prefabricated method of construction is acceptable for the installation of the cladding on the following bases:
   A) The new cladding system may be installed over the existing cladding.
   B) The existing cladding may be cut or completely removed if an alternative system is preferred.
2. Panel Assembly:
   A) Duplicate the existing cladding sub-frame and support system.
   B) The existing cladding may be cut or completely removed if an alternative system is preferred.
3. Fabrication:
   A) Assembly of prefabricated panels may be done off-site or in the Contractor's areas on-site.
   B) Submit structural calculations of sub-frame and lifting system for review.
   C) Deflection of the panel assembly must be limited to 1/240 th of spans at all times during fabrication, transportation, lifting, and installation.
   D) The new cladding assembly shall duplicate, or be similar, to the existing sub-frame performance, weight, geometry, dimensions, and clearances.
   E) The plywood layer of the cladding system may be eliminated from the prefabricated assembly system, if adequate coordinated support is provided.
   F) The numbers and sizes of the connections in the diagrammatic details are indicative. The Contractor shall be responsible for the number of connections, the sizes of the connection members, and the distribution of the loads within the existing structural frame.
4. Installation:
   A) Attach the prefabricated assembly to the existing sub-frame.
   B) The installation process is limited to the closure of four (4) toll lanes during night working hours, per specifications.
   C) The working space above the closed toll lanes shall allow a minimum one-half lane on each side of the prefabricated assembly installation, unless authorized otherwise by the Engineer.
   D) The Contractor shall maintain:
      1) Temporary traffic lights at each closed lane, per specifications.
      2) Temporary signage at each closed lane per specifications.
   E) The contractor shall coordinate access across live traffic lanes to the work area with the Engineer.

AA-510

	BY	CHECKED
DESIGN	B. Howell	S. Danielson
DETAILS	Z. Sadat	R. Howell
QUANTITIES		

PREPARED FOR THE STATE OF CALIFORNIA DEPARTMENT OF TRANSPORTATION

PROJECT ENGINEER

BRIDGE NO.

POST MILE

SFOBB TOLL PLAZA CANOPY RENOVATIONS

OPTIONAL PREFABRICATED SYSTEM

DESIGN GENERAL PLAN SHEET (ENGLISH) (REV. 06-01-09)

ORIGINAL SCALE IN INCHES FOR REDUCED PLANS 0 1 2 3

CU BATA011
EA 4G2801/4G2901

DISREGARD PRINTS BEARING EARLIER REVISION DATES

REVISION DATES (PRELIMINARY STAGE ONLY) -

SHEET 33 OF 64

C:\Documents and Settings\reyesl\My Documents\SFOBB-Canopy-Arch_reyesl.rvt

8/15/2012 10:01:07 AM

DIST	COUNTY	ROUTE	POST MILES TOTAL PROJECT	SHEET No	TOTAL SHEETS
04	Ala	80	2.0/2.3	71	83

REGISTERED STRUCTURAL ENGINEER — DATE 06/26/2012

PLANS APPROVAL DATE

REGISTERED PROFESSIONAL ENGINEER — MEE SHING OWYANG — No. 2246 — STRUCTURAL — STATE OF CALIFORNIA

The State of California or its officers or agents shall not be responsible for the accuracy or completeness of electronic copies of this plan sheet.

Parsons Brinckerhoff
303 Second Street
Suite 700 North
San Francisco, CA 94107-1317

BAY AREA TOLL AUTHORITY
101 EIGHT STREET
OAKLAND, CA 94607

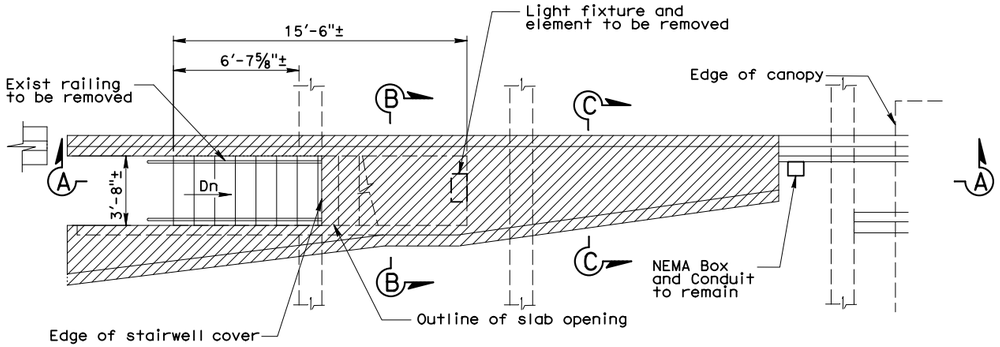

PLAN

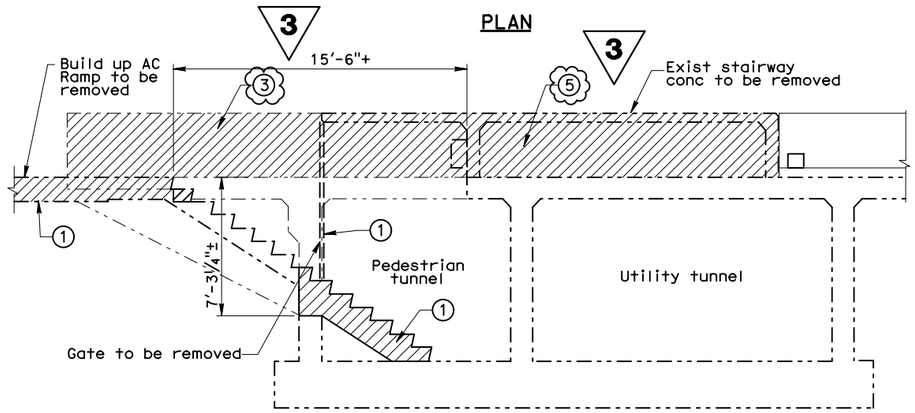

SECTION A-A

STAGE 1 - DEMOLITION

NO SCALE

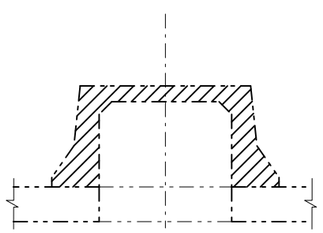

SECTION B-B

NO SCALE

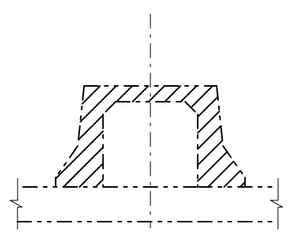

SECTION C-C

NO SCALE

LEGEND:

To be removed

Existing to remain

Construction staging

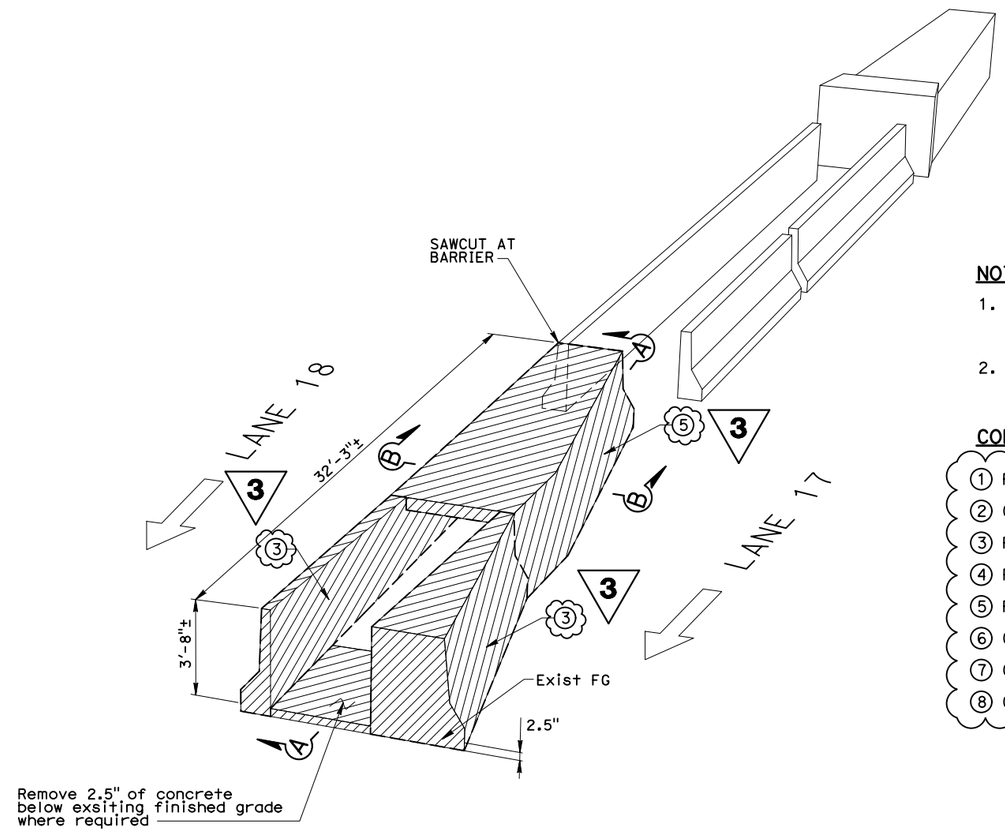

CRASH BARRIER

PERSPECTIVE VIEW

NO SCALE

NOTES:

1. The Contractor shall verify in the field all controlling dimensions before ordering or fabricating any materials.
2. See CALTRANS standard specifications for other specific requirements.

CONSTRUCTION STAGING

1. REMOVE STAIRS, GATE AND AC RAMP
2. CONSTRUCT WALL (SEE SHEET S-512)
3. REMOVE Conc. BARRIER
4. PLACE PCC BACKFILL (SEE SHEET S-512)
5. REMOVE Conc. LID
6. CONSTRUCT PCC SLAB (SEE SHEET S-512)
7. CONSTRUCT PAVEMENT
8. CONSTRUCT ANCHORED K-RAIL

3 **REVISED PER ADDENDUM NO. 3 DATED AUGUST 20, 2012**

AS-511

DESIGN	BY	CHECKED
DETAILS	BY	CHECKED
QUANTITIES	BY	CHECKED

PREPARED FOR THE STATE OF CALIFORNIA DEPARTMENT OF TRANSPORTATION

PROJECT ENGINEER

BRIDGE NO.

POST MILE

SFOBB TOLL PLAZA CANOPY RENOVATIONS

STAIRWAY NO.7 REMOVAL

DESIGN DETAIL SHEET (ENGLISH) (REV. 2/25/05)

ORIGINAL SCALE IN INCHES FOR REDUCED PLANS 0 1 2 3

CU BATA011
EA 4G2801/4G2901

DISREGARD PRINTS BEARING EARLIER REVISION DATES

REVISION DATES (PRELIMINARY STAGE ONLY)

SHEET 52 OF 64

FILE => AS-511.dgn

USERNAME => ReyesL DATE PLOTTED => 15-AUG-2012 TIME PLOTTED => 10:17

3 REVISED PER ADDENDUM NO. 3 DATED AUGUST 20, 2012

DIST	COUNTY	ROUTE	POST MILES TOTAL PROJECT	SHEET No	TOTAL SHEETS
04	Ala	80	2.0/2.3	72	83

REGISTERED STRUCTURAL ENGINEER 06/26/2012 DATE

PLANS APPROVAL DATE

REGISTERED PROFESSIONAL ENGINEER MEE SHING CHYANG No. 2246 STRUCTURAL STATE OF CALIFORNIA

The State of California or its officers or agents shall not be responsible for the accuracy or completeness of electronic copies of this plan sheet.

Parsons Brinckerhoff
303 Second Street
Suite 700 North
San Francisco, CA 94107-1317

BAY AREA TOLL AUTHORITY
101 EIGHT STREET
OAKLAND, CA 94607

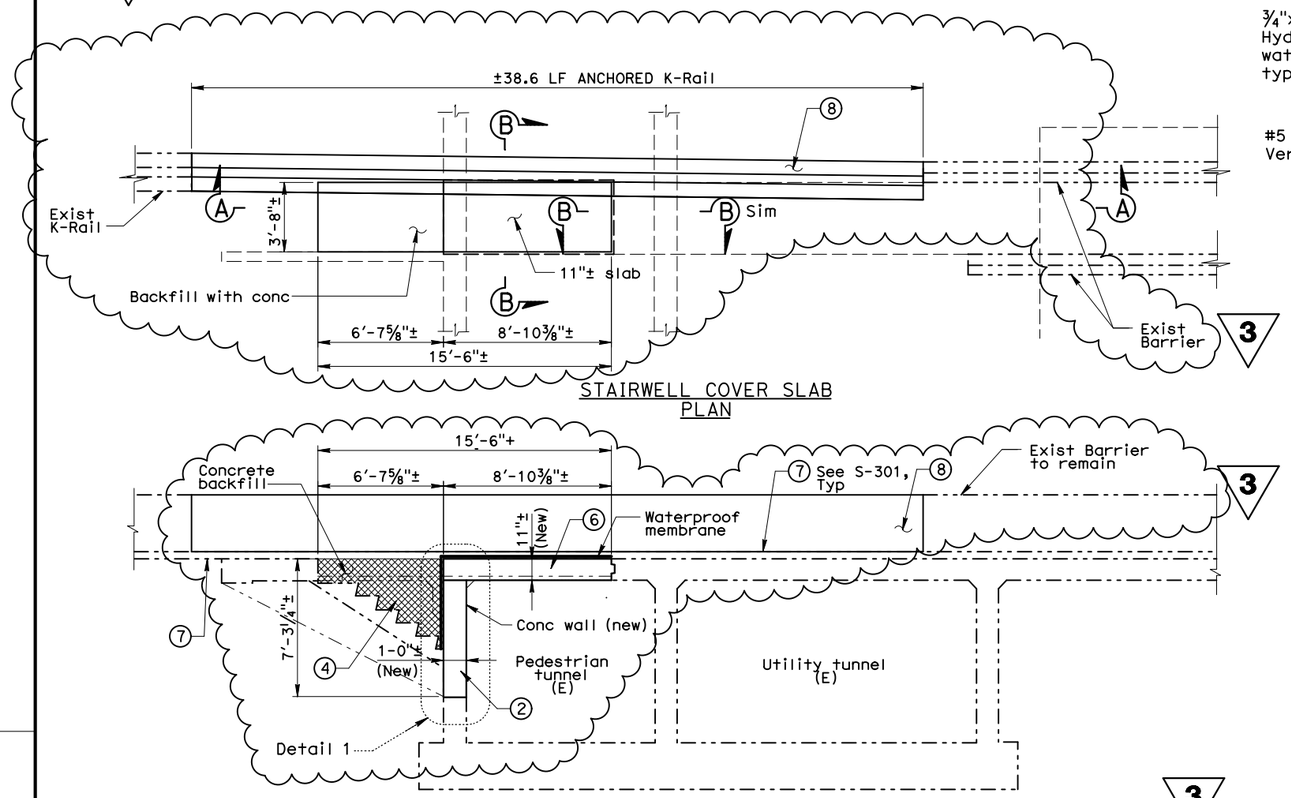

STAIRWELL COVER SLAB PLAN

SECTION A-A

STAGE 2 - RECONSTRUCTION

¼"=1'-0"

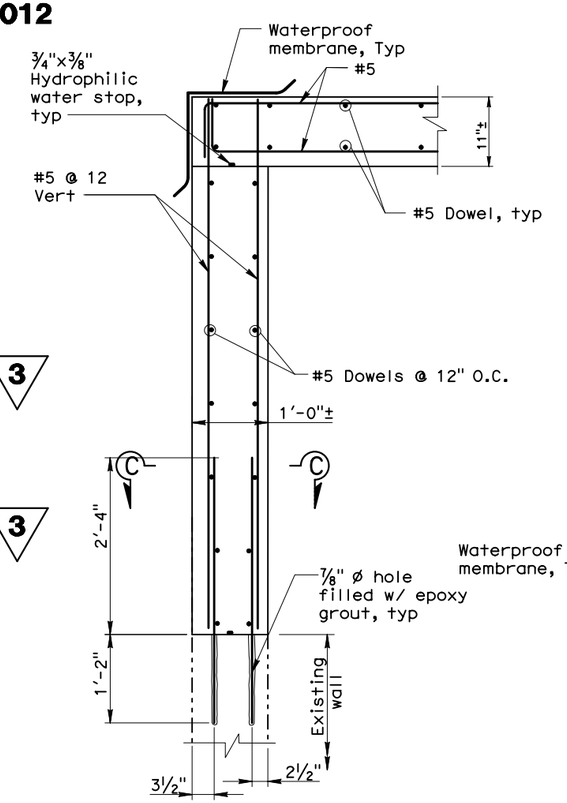

DETAIL 1

1"=1'-0"

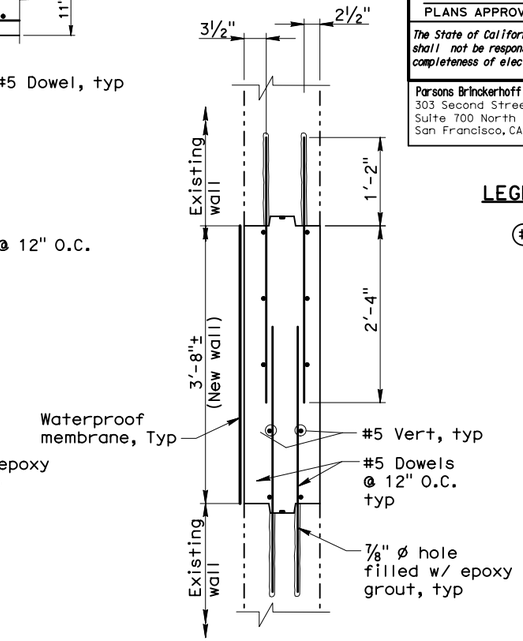

SECTION C-C

1"=1'-0"

LEGEND:

(#) Construction sequencing

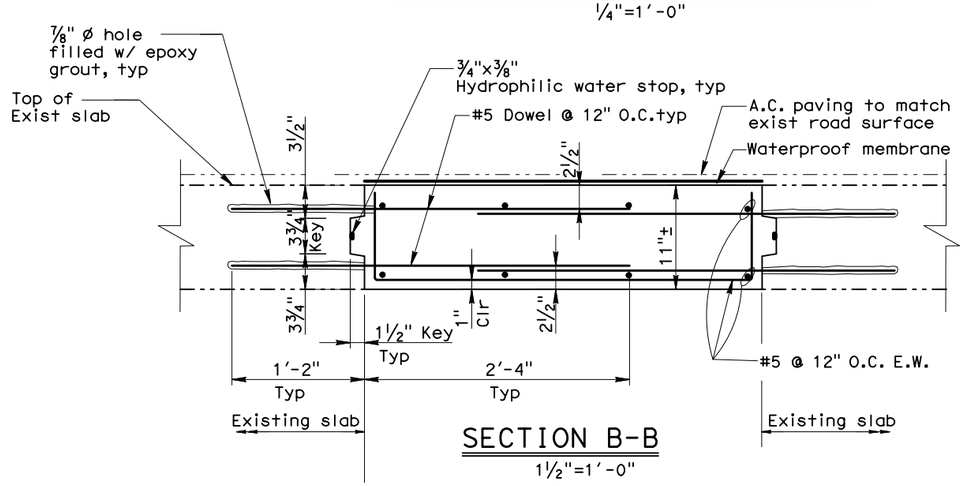

SECTION B-B

1½"=1'-0"

3

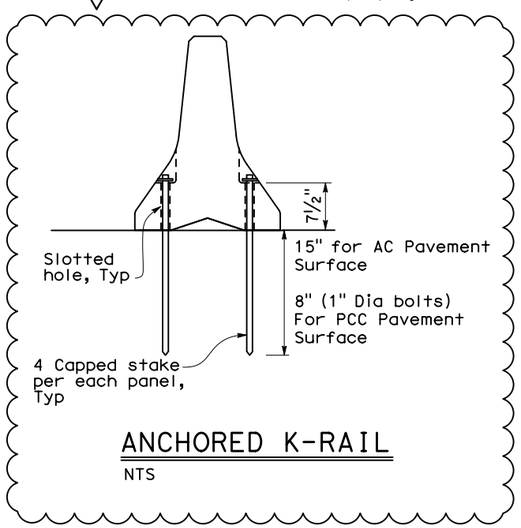

ANCHORED K-RAIL

NTS

NOTES:

1. The Contractor shall verify in the field all controlling dimensions before ordering or fabricating any materials.
2. All concrete shall be normal weight with type II, low alkali Portal cement and ultimate compressive strength @ 28 days of 4,000 psi.
3. Reinforcement for structural concrete shall be deformed steel bars conforming to ASTM A706, with nominal yield strength of 60,000 psi.
4. Epoxy grout shall be a three-component epoxy resin grout with the following minimum density and physical properties in 24 hours:

Density (ASTM C-905):	128 pcf
Volume change:	-0.02%
Compression strength (ASTM C-579):	11,500 psi
Flexural strength (ASTM C-580):	7,000 psi
Modulus of elasticity (ASTM C-580):	114,000 psi
Tensile strength (ASTM C-307):	2,600 psi
Bond strength of concrete (ASTM D-4541):	300-400 psi

5. Hydrophilic water stop shall be a flexible strip made of a hydrophilic expanding rubber combined with chloroprene rubber, Swellseal 2010 by Vinylex Corporation or provided equal or better, with the following physical properties:

Expansions ratio:	2 X in contact with potable water
Elongation before break:	500%
Hardness:	40
Density:	1.27
Tensile Strength:	853 psi

6. See CALTRANS standard specifications for other specific requirements.

AS-512

DESIGN	BY		CHECKED
DETAILS	BY		CHECKED
QUANTITIES	BY		CHECKED

PREPARED FOR THE STATE OF CALIFORNIA DEPARTMENT OF TRANSPORTATION

PROJECT ENGINEER

BRIDGE NO.

POST MILE

SFOBB TOLL PLAZA CANOPY RENOVATIONS

STAIRWAY NO.7 REMOVAL

DESIGN DETAIL SHEET (ENGLISH) (REV. 2/25/05)

ORIGINAL SCALE IN INCHES FOR REDUCED PLANS 0 1 2 3

CU BATA011
EA 4G2801/4G2901

DISREGARD PRINTS BEARING EARLIER REVISION DATES

REVISION DATES (PRELIMINARY STAGE ONLY)

SHEET 53 OF 64

FILE => AS-512.dgn

USERNAME => ReyesL DATE PLOTTED => 15-AUG-2012 TIME PLOTTED => 10:17

Dist	COUNTY	ROUTE	POST MILES TOTAL PROJECT	SHEET No.	TOTAL SHEETS
04	Ala	80	2.0/2.3	13	83

REGISTERED CIVIL ENGINEER 06/26/2012 DATE

PLANS APPROVAL DATE

REGISTERED PROFESSIONAL ENGINEER JAMES ZANDIAN No. C 51957 Exp. 6-30-12 CIVIL STATE OF CALIFORNIA

THE STATE OF CALIFORNIA OR ITS OFFICERS OR AGENTS SHALL NOT BE RESPONSIBLE FOR THE ACCURACY OR COMPLETENESS OF SCANNED COPIES OF THIS PLAN SHEET.

Parsons Brinckerhoff
303 Second Street
Suite 700 North
San Francisco, CA 94107-1317

BAY AREA TOLL AUTHORITY
101 EIGHT STREET
OAKLAND, CA 94607

LEGEND:

CONTRACTOR LAYDOWN AREA

TEMPORARY FENCE

NOTES:

1. CONTRACTOR SHALL PLACE FENCE AROUND THE LAYDOWN AREA.
2. ACCESS TO TOLL PLAZA BUILDING SHALL REMAIN OPEN AT ALL TIMES.
3. ACCESS TO THE IN-USE TOLL PLAZA PARKING SHALL REMAIN OPEN AT ALL TIMES.
4. CONSTRUCTION ACCESS IS SHOWN ON THE DRAWINGS.
5. TEMPORARY FENCE SHALL BE OF TYPE THAT DOES NOT REQUIRE DRILLING FOR POSTS. NO DRILLING FOR FENCE POSTS WILL BE ALLOWED UNLESS OTHERWISE APPROVED BY THE ENGINEER IN WRITTING.
6. CONTRACTOR LAYDOWN AREA IS NOT FOR THE CONTRACTOR'S EXCLUSIVE USE.
7. MUST MAINTAIN ACCESS THROUGH PARKING LOT AT ALL TIMES.

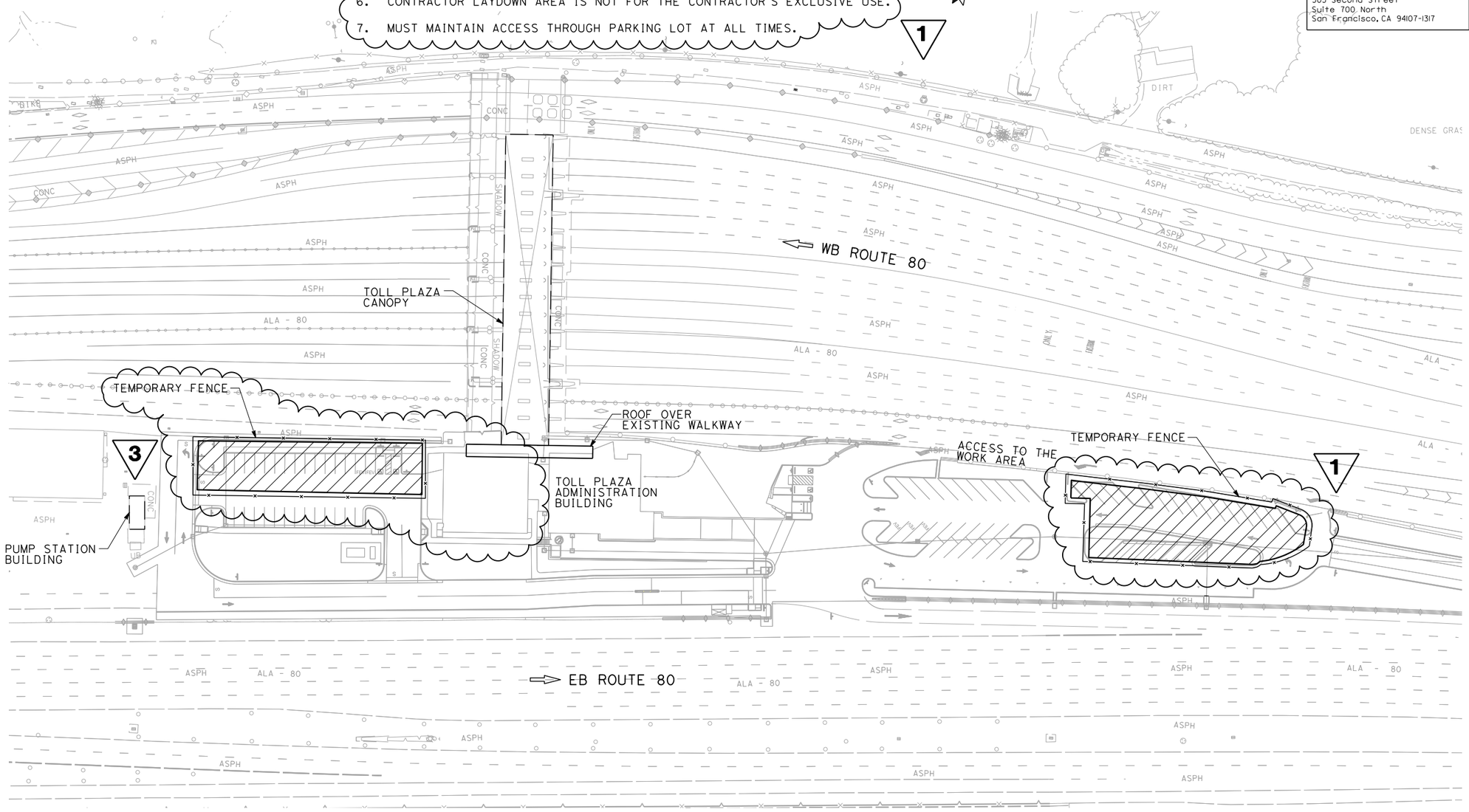

1 REVISED PER ADDENDUM NO. 1 DATED AUGUST 3, 2012

3 REVISED PER ADDENDUM NO. 3 DATED AUGUST 20, 2012

ALL DIMENSIONS ARE IN FEET UNLESS OTHERWISE SHOWN

CONTRACTOR LAYDOWN AREA

SCALE: 1" = 50'

50' 0' 50' 100'

GRAPHIC SCALE

SC-1

STATE OF CALIFORNIA - DEPARTMENT OF TRANSPORTATION

Caltrans

FUNCTIONAL SUPERVISOR

CALCULATED-DESIGNED BY CHALIT SUNTHUDKARN

CHECKED BY JAMES ZANDIAN

REVISED BY

DATE REVISED

LAST REVISION 00-00-00

DATE PLOTTED => 8/17/2012
TIME PLOTTED => 2:25:59 PM

BORDER LAST REVISED 7/2/2010

USERNAME => macgregor
DGN FILE => SC-1.dgn

RELATIVE BORDER SCALE IS IN INCHES 0 1 2 3

UNIT 0000

PROJECT NUMBER & PHASE BATA011