Dist	COUNTY	ROUTE	POST MILES TOTAL PROJECT	SHEET No.	TOTAL SHEETS
04	Ala	80	1.8/2.1	1	47

STATE OF CALIFORNIA

DEPARTMENT OF TRANSPORTATION

PROJECT PLANS FOR CONSTRUCTION ON

STATE HIGHWAY

IN ALAMEDA COUNTY
IN OAKLAND
AT THE SAN FRANCISCO-OAKLAND BAY BRIDGE TOLL PLAZA

TO BE SUPPLEMENTED BY STANDARD PLANS DATED MAY 2006

SFOBB ORT PROJECT AS-BUILT PLANS

INDEX OF PLANS

SHEET CODE	SHEET NUMBER	DESCRIPTION
	1	TITLE SHEET
X-1	2	TYPICAL CROSS SECTIONS
L-1	3	LAYOUT
C-1 - C-2	4-5	CONSTRUCTION DETAILS
WPC-1 - WPC-2	6-7	TEMPORARY WATER POLLTION CONTROL PLANS
D-1	8	DRAINAGE PLAN
U-1 - U-2	9-10	UTILITY PLANS
CS-1	11	CONSTRUCTION AREA SIGNS
TH-1	12	TRAFFIC HANDLING PLAN
PD-1	13	PAVEMENT DELINEATION
PDQ-1	14	PAVEMENT DELINEATION QUANTITIES
S-1 - S-6	15-20	SIGN PLAN AND DETAILS
Q-1	21	QUANTITIES
DM-1	22	DEMOLITION PLAN
DMD-1 - DMD-2	23-24	DEMOLITION DETAILS
E-1 - E-23	25-47	ELECTRICAL PLANS

LOCATION MAP

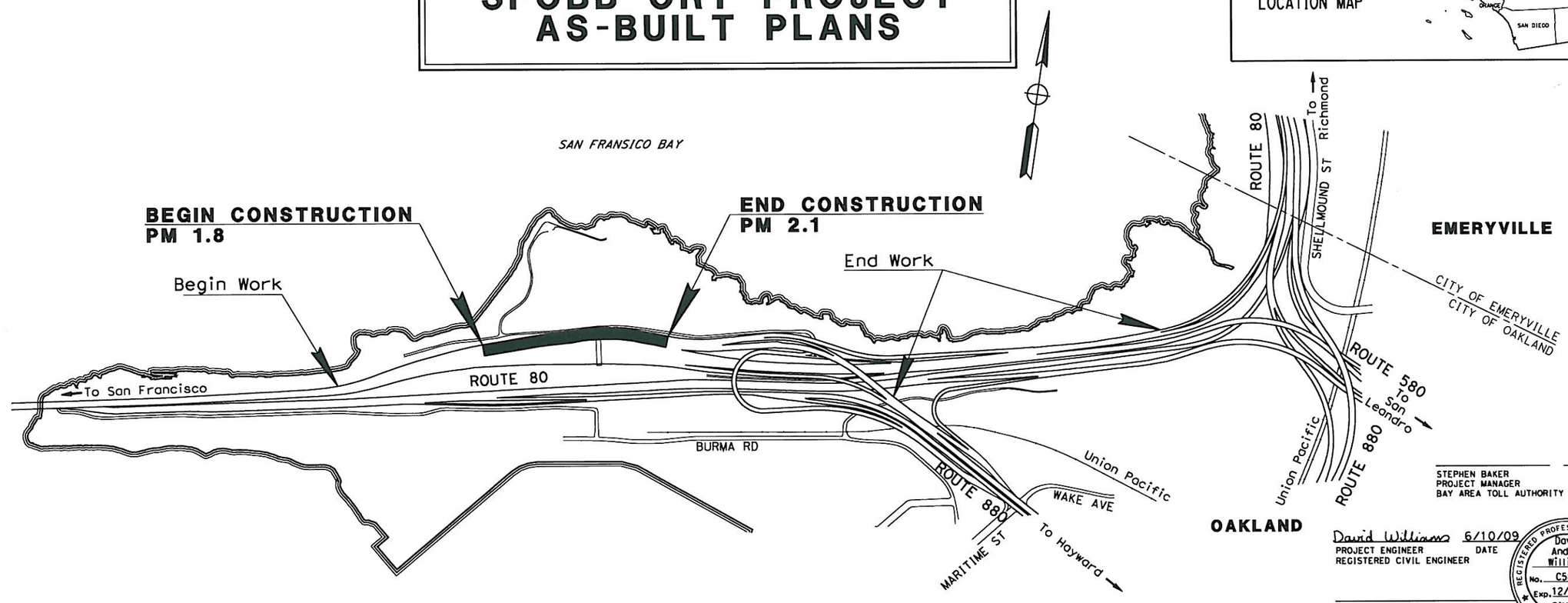

NO SCALE

APPROVED AS TO IMPACT ON STATE FACILITIES AND CONFORMANCE WITH APPLICABLE STATE STANDARDS AND PRACTICES AND THAT TECHNICAL OVERSIGHT WAS PERFORMED.

DATE SIGNED

APPROVED AS TO IMPACT ON BAY AREA TOLL AUTHORITY FACILITIES AND CONFORMANCE WITH APPLICABLE BAY AREA TOLL AUTHORITY STANDARDS AND PRACTICES.

DATE SIGNED

LICENSE Exp DATE

REGISTRATION No.

CALTRANS DESIGN OVERSIGHT APPROVAL

BAY AREA TOLL AUTHORITY APPROVAL

CONSULTANT DESIGN ENGINEER

STEPHEN BAKER
PROJECT MANAGER
BAY AREA TOLL AUTHORITY
DATE

David Williams 6/10/09
PROJECT ENGINEER DATE
REGISTERED CIVIL ENGINEER

REGISTERED PROFESSIONAL ENGINEER
David Andrew Williams
No. C58697
Exp. 12/31/10
CIVIL
STATE OF CALIFORNIA

PLANS APPROVAL DATE

THE STATE OF CALIFORNIA OR ITS OFFICERS OR AGENTS SHALL NOT BE RESPONSIBLE FOR THE ACCURACY OR COMPLETENESS OF SCANNED COPIES OF THIS PLAN SHEET.

AS BUILT
CONTRACT No. 04A201 BATA-006
C.C.A. DATE 6.18.2010
R.E. NAME BRUCE J SHEUCHUK
C49703
Bruce J Sheuchuk
R.E. Signature for final approval of As-built information

BAY AREA TOLL AUTHORITY
101 EIGHTH STREET
OAKLAND, CA 94607

URS CORPORATION
55 SOUTH MARKET STREET, SUITE 1500
SAN JOSE, CA 95113-2332

CONTRACT No.

LAST REVISION 00-00-00

DATE PLOTTED => 8/24/2010
TIME PLOTTED => 11:12:10 AM

THE CONTRACTOR SHALL POSSESS THE CLASS (OR CLASSES) OF LICENSE AS SPECIFIED IN THE "NOTICE TO BIDDERS."

Dist	COUNTY	ROUTE	POST MILES TOTAL PROJECT	SHEET No.	TOTAL SHEETS
04	Ala	80	1.8/2.1	2	47

David Williams 6/10/09
REGISTERED CIVIL ENGINEER DATE

PLANS APPROVAL DATE

REGISTERED PROFESSIONAL ENGINEER David Andrew Williams No. C58697 Exp. 12/31/10 CIVIL STATE OF CALIFORNIA

THE STATE OF CALIFORNIA OR ITS OFFICERS OR AGENTS SHALL NOT BE RESPONSIBLE FOR THE ACCURACY OR COMPLETENESS OF SCANNED COPIES OF THIS PLAN SHEET.

BAY AREA TOLL AUTHORITY
101 EIGHTH STREET
OAKLAND, CA 94607

URS CORPORATION
55 SOUTH MARKET STREET
SUITE 1500
SAN JOSE, CA 95113-2332

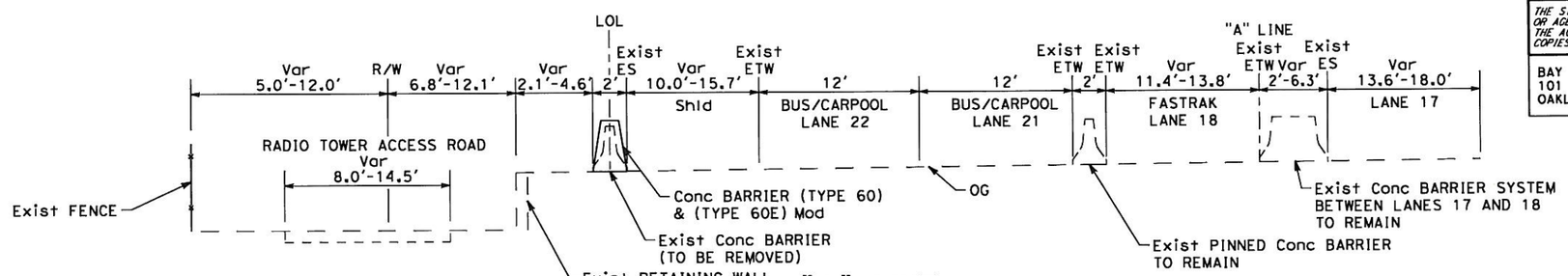

"A" LINE
19+52.37 TO 20+95.92

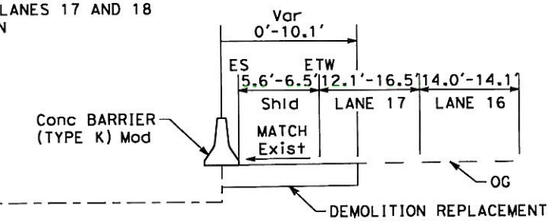

17+33.96 TO 19+16.71

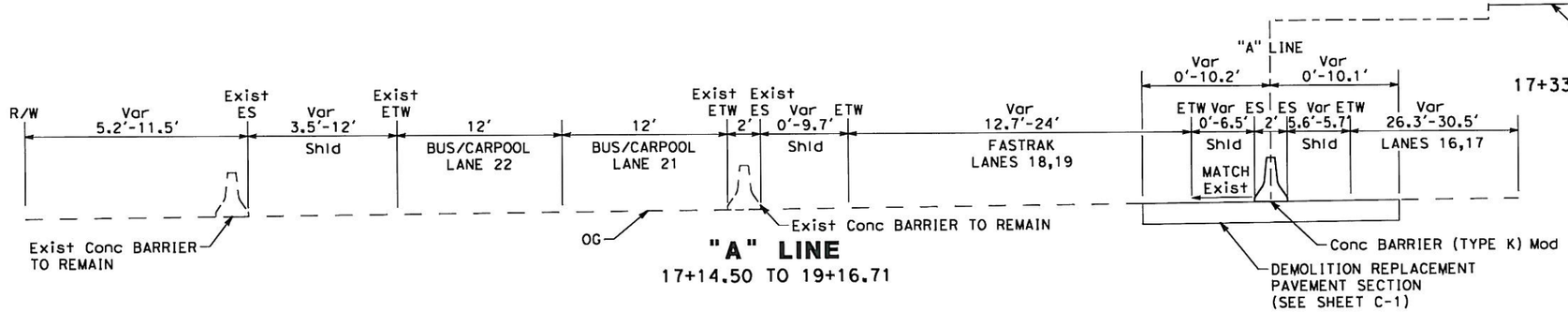

"A" LINE
17+14.50 TO 19+16.71

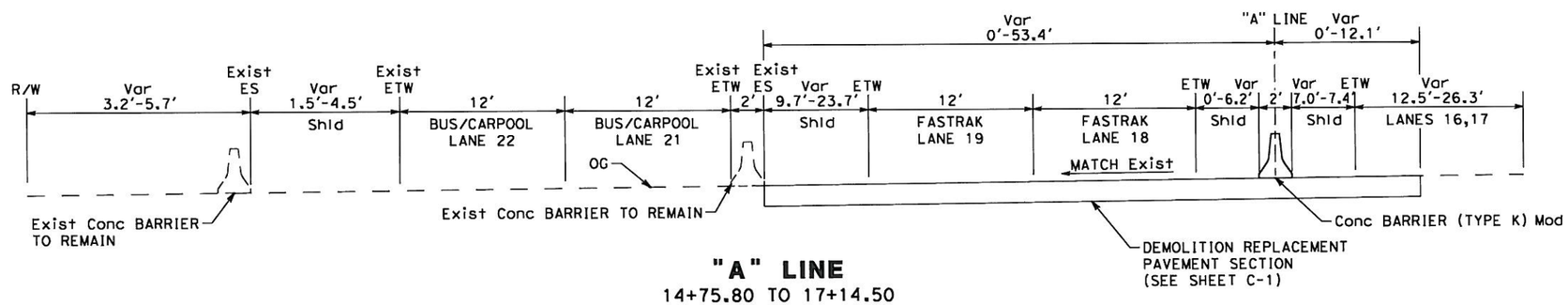

"A" LINE
14+75.80 TO 17+14.50

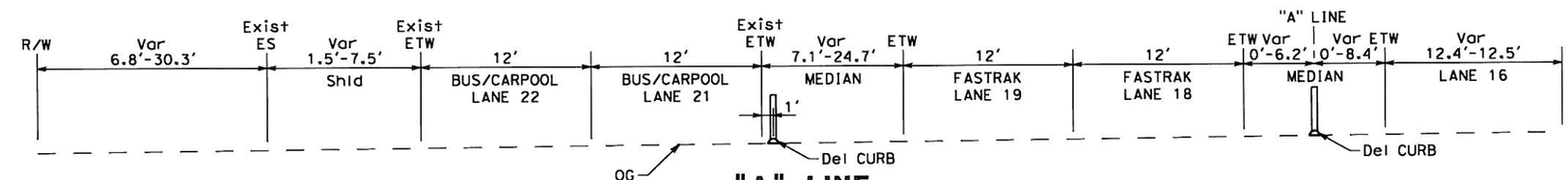

"A" LINE
10+00.00 TO 14+75.80

AS BUILT
(NO CORRECTIONS ON THIS SHEET)
CONTRACT No. 04420K
C.C.A. DATE 4-18-2010
R.E. NAME BRUCE SHENCHUCK

TYPICAL CROSS-SECTIONS
NO SCALE **X-1**

STATE OF CALIFORNIA - DEPARTMENT OF TRANSPORTATION
Caltrans
CONSULTANT FUNCTIONAL SUPERVISOR: LARRY JONES
CALCULATED-DESIGNED BY
CHECKED BY
REVISED BY
DATE REVISED

LAST REVISION 00-00-00
DATE PLOTTED => 8/24/2010
TIME PLOTTED => 11:12:17 AM

Dist	COUNTY	ROUTE	POST MILES TOTAL PROJECT	SHEET No.	TOTAL SHEETS
04	Ala	80	1.8/2.1	3	47

David Williams 6/10/09
REGISTERED CIVIL ENGINEER DATE

PLANS APPROVAL DATE

REGISTERED PROFESSIONAL ENGINEER David Andrew Williams No. C58697 Exp. 12/31/10 CIVIL STATE OF CALIFORNIA

THE STATE OF CALIFORNIA OR ITS OFFICERS OR AGENTS SHALL NOT BE RESPONSIBLE FOR THE ACCURACY OR COMPLETENESS OF SCANNED COPIES OF THIS PLAN SHEET.

BAY AREA TOLL AUTHORITY
101 EIGHTH STREET
OAKLAND, CA 94607

URS CORPORATION
55 SOUTH MARKET STREET
SUITE 1500
SAN JOSE, CA 95113-2332

CURVE DATA

No.	R	Δ	T	L	COORDINATE N	COORDINATE E
1	1500.00	09°51'35"	129.38	258.13	2129288.84	6036931.13
2	800.00	13°51'08"	97.18	193.41	2127201.01	6037896.00
3	1800.00	15°02'42"	237.70	472.66	2126219.22	6038085.98

LEGEND

- [x] Exist LANE NUMBERS
- GANTRY STRUCTURE
- (x) CURVE ALIGNMENT DATA
- EXCAVATION LIMITS
- Conc BARRIER (TYPE AS SHOWN)
- Del CURB

ABBREVATIONS

AP ANGLE POINT
DE DRAINAGE EASEMENT
BCDC BAY CONSERVATION AND DEVELOPMENT COMMISSION
LWA LIGHTWEIGHT AGGREGATE

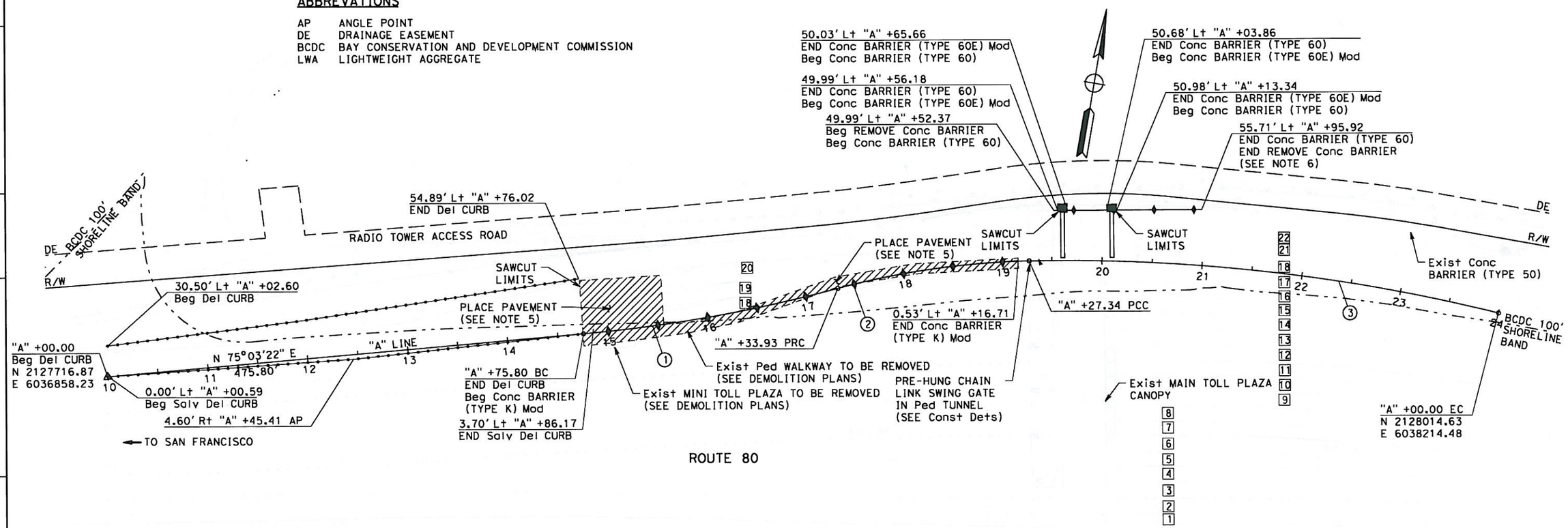

NOTES

1. FOR COMPLETE RIGHT OF WAY AND ACCURATE ACCESS DATA, SEE RIGHT OF WAY RECORD MAPS AT BATA OFFICE.
2. COORDINATES, DISTANCES, AND BEARINGS SHOWN ARE BASED ON CALIFORNIA COORDINATE SYSTEM ZONE 3. THE HORIZONTAL DATUM IS NAD 1983. TO OBTAIN GROUND DISTANCES, MULTIPLY GRID DISTANCES BY 1.0000639. THE VERTICAL DATUM IS NAVD 1988.
3. THE PRIMARY BENCHMARK FOR THIS PROJECT IS CALTRANS HV-72 BEING A 1" BRASS DISK IN PAVEMENT HAVING AN ELEVATION OF 7.457 US SURVEY FEET. COORDINATES ARE N2127875.36 E6036932.30
4. OFFSETS ARE TO CENTER OF BARRIER AND DELINEATOR CURB.
5. SEE SHEET C-1 FOR DEMOLITION REPLACEMENT PAVEMENT SECTION.
6. FOR TRANSITION FROM Conc BARRIER (TYPE 60) TO Exist Conc BARRIER (TYPE 50) REFER TO Std PLAN A76B.

AS BUILT
(NO CORRECTIONS ON THIS SHEET)
CONTRACT No. 0G420K, BATA 006
C.C.A. DATE 6-19-2015
R.E. NAME BRUCE GREENCHUCK

LAYOUT

SCALE: 1" = 50'

L-1

STATE OF CALIFORNIA - DEPARTMENT OF TRANSPORTATION
Caltrans
CONSULTANT FUNCTIONAL SUPERVISOR LARRY JONES
CALCULATED-DESIGNED BY
CHECKED BY
REVISED BY
DATE REVISED

LAST REVISION 00-00-00
DATE PLOTTED => 8/24/2010
TIME PLOTTED => 11:12:21 AM

BORDER LAST REVISED 4/11/2008
RELATIVE BORDER SCALE IS IN INCHES 0 1 2 3
USERNAME => carol_doehne
DGN FILE => SFOBBORT_L01.dgn
CU 00000
EA 0G420K

Dist	COUNTY	ROUTE	POST MILES TOTAL PROJECT	SHEET No.	TOTAL SHEETS
04	Ala	80	1.8/2.1	4	47

David Williams 6/10/09
REGISTERED CIVIL ENGINEER DATE

PLANS APPROVAL DATE

REGISTERED PROFESSIONAL ENGINEER David Andrew Williams No. C58697 Exp. 12/31/10 CIVIL STATE OF CALIFORNIA

THE STATE OF CALIFORNIA OR ITS OFFICERS OR AGENTS SHALL NOT BE RESPONSIBLE FOR THE ACCURACY OR COMPLETENESS OF SCANNED COPIES OF THIS PLAN SHEET.

BAY AREA TOLL AUTHORITY
101 EIGHTH STREET
OAKLAND, CA 94607

URS CORPORATION
55 SOUTH MARKET STREET
SUITE 1500
SAN JOSE, CA 95113-2332

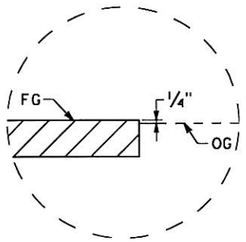

DETAIL A

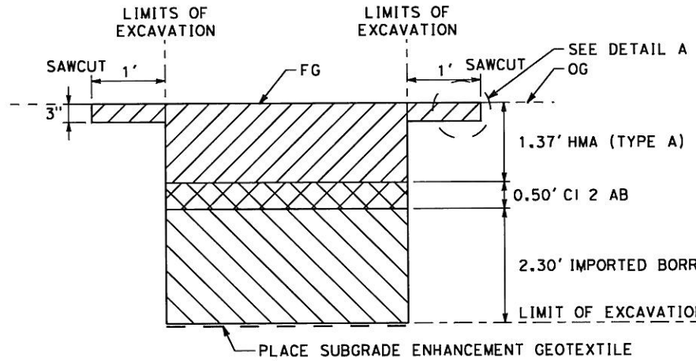

DEMOLITION REPLACEMENT PAVEMENT SECTION

NO SCALE

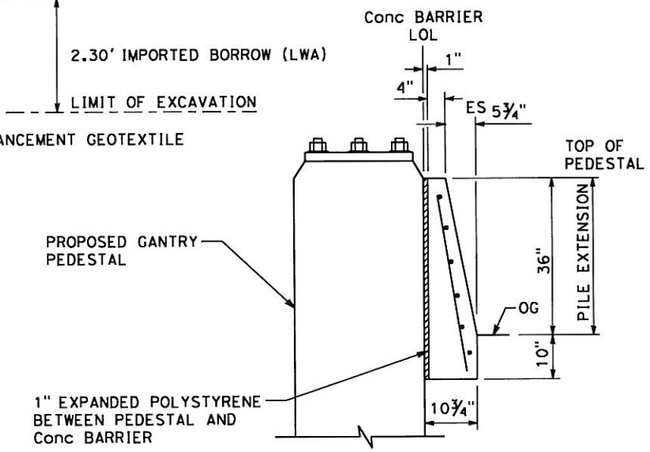

SECTION A-A

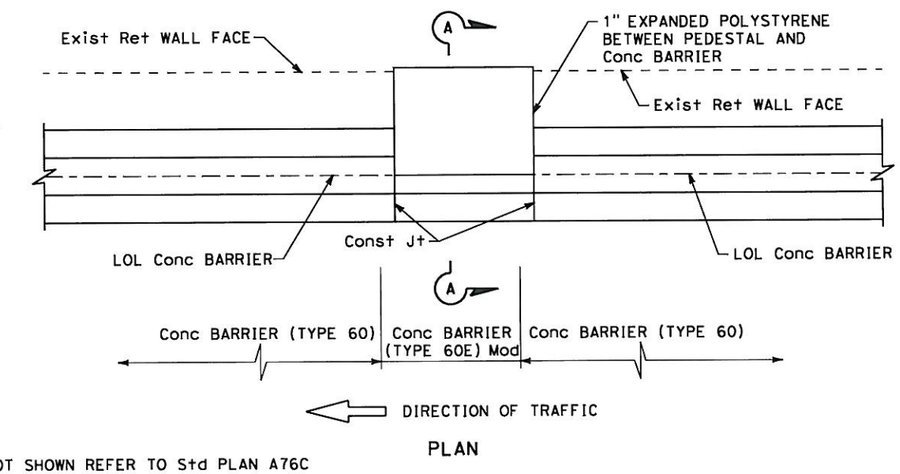

PLAN

NOTES:
1. FOR DETAILS NOT SHOWN REFER TO Std PLAN A76C

Conc BARRIER (TYPE 60E) Mod

NO SCALE

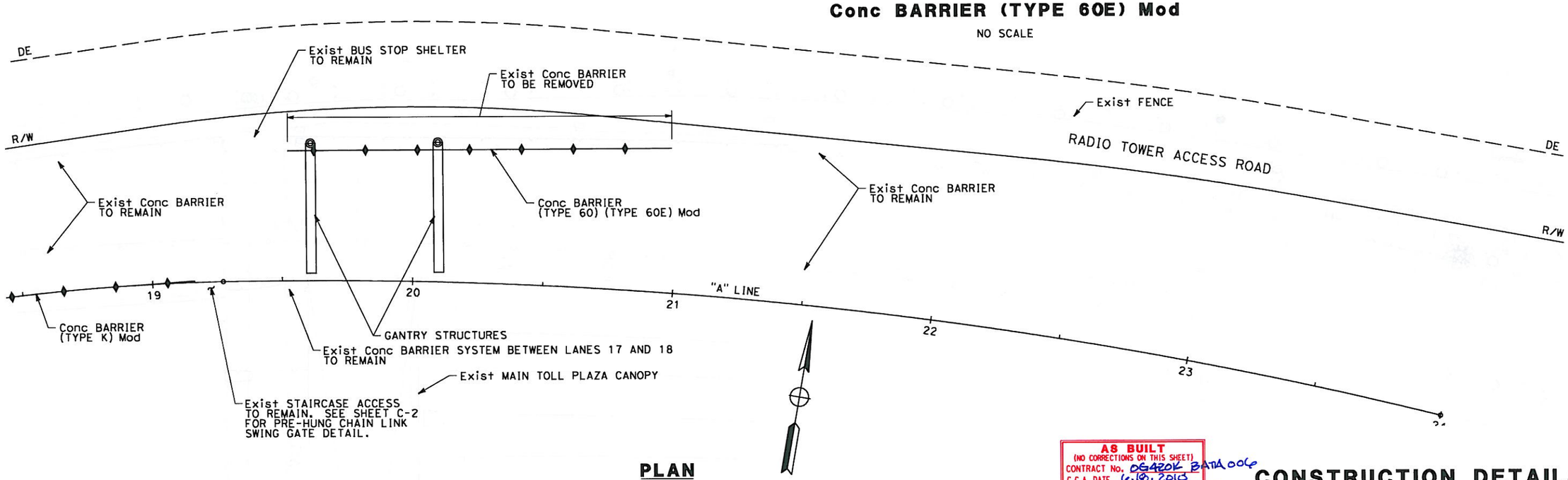

PLAN

SCALE: 1" = 20'

AS BUILT
(NO CORRECTIONS ON THIS SHEET)
CONTRACT No. 0G420K BATA 006
C.C.A. DATE 6-18-2013
R.E. NAME BRUCE SHEWCHUK

CONSTRUCTION DETAILS

SCALE: AS SHOWN

C-1

REVISED BY | DATE REVISED
CALCULATED-DESIGNED BY | CHECKED BY
CONSULTANT FUNCTIONAL SUPERVISOR: LARRY JONES
STATE OF CALIFORNIA - DEPARTMENT OF TRANSPORTATION
Caltrans

LAST REVISION 00-00-00 | DATE PLOTTED => 8/24/2010 | TIME PLOTTED => 11:12:28 AM

BORDER LAST REVISED 4/11/2008 | RELATIVE BORDER SCALE IS IN INCHES 0 1 2 3 | USERNAME => carol_doehne | DGN FILE => SFOBBORT_C01.dgn | CU 00000 | EA 0G420K

Dist	COUNTY	ROUTE	POST MILES TOTAL PROJECT	SHEET No.	TOTAL SHEETS
04	Ala	80	1.8/2.1	5	47

David Williams 6/10/09
REGISTERED CIVIL ENGINEER DATE

PLANS APPROVAL DATE

REGISTERED PROFESSIONAL ENGINEER David Andrew Williams No. C58697 Exp. 12/31/10 CIVIL STATE OF CALIFORNIA

THE STATE OF CALIFORNIA OR ITS OFFICERS OR AGENTS SHALL NOT BE RESPONSIBLE FOR THE ACCURACY OR COMPLETENESS OF SCANNED COPIES OF THIS PLAN SHEET.

BAY AREA TOLL AUTHORITY
101 EIGHTH STREET
OAKLAND, CA 94607

URS CORPORATION
55 SOUTH MARKET STREET
SUITE 1500
SAN JOSE, CA 95113-2332

NOTES:
1. STEEL SLEEVE TO BE CONSTRUCTED WITH A DIAMETER 0.1" LARGER THAN POST. WALL THICKNESS OF SLEEVE TO BE SAME AS POST OR LARGER.

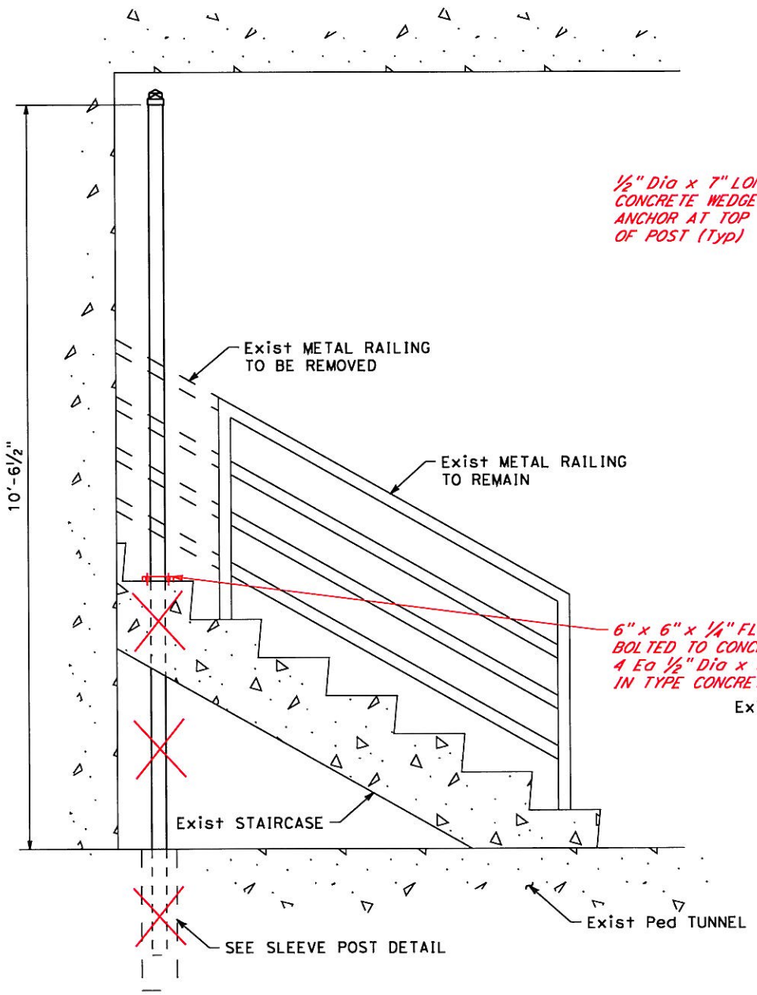

SOUTH ELEVATION

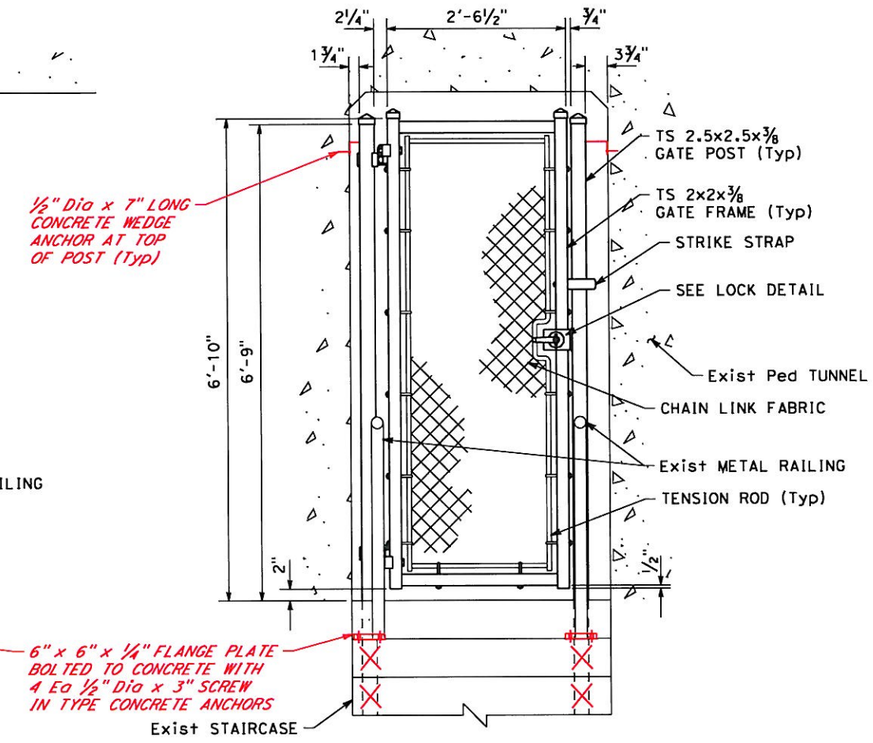

EAST ELEVATION

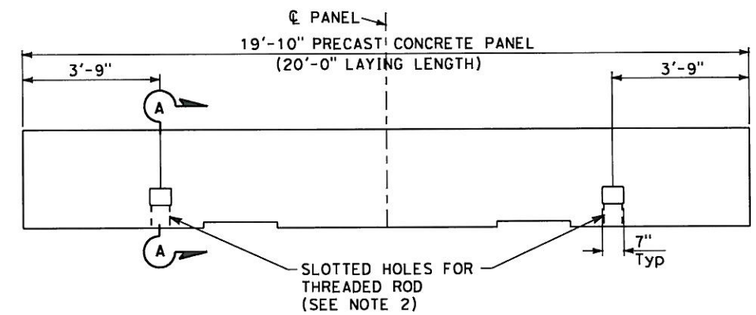

ELEVATION

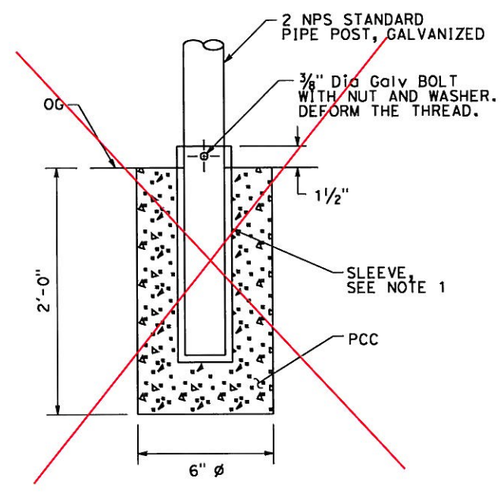

SLEEVE POST DETAIL

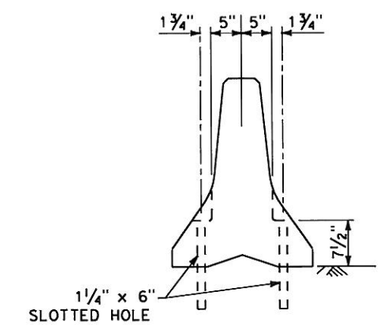

SECTION A-A

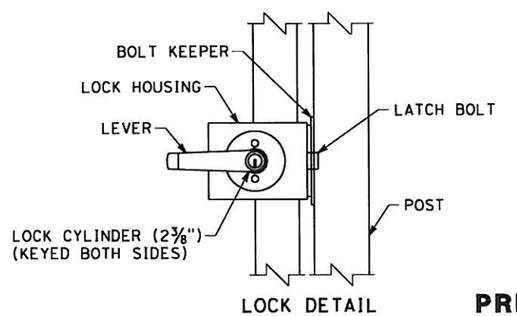

LOCK DETAIL

NOTES:
1. FOR DETAILS NOT SHOWN SEE STANDARD PLAN T3
2. ATTACH EACH PANEL WITH 1" ø THREADED RODS WITH NUT AND WASHER INSERTED THROUGH THE SLOTTED HOLES OF THE PANEL AND BOND IN 1¼" ø DRILLED HOLES 6" DEEP IN PAVEMENT.

Conc BARRIER (TYPE K) Mod

PRE-HUNG CHAIN LINK SWING GATE

AS BUILT
CONTRACT No. 0G420K, BATA-004
C.C.A. DATE 6.18.2010
R.E. NAME BRUCE STEWCHUK

CONSTRUCTION DETAILS
NO SCALE
C-2

STATE OF CALIFORNIA - DEPARTMENT OF TRANSPORTATION
CONSULTANT FUNCTIONAL SUPERVISOR: LARRY JONES
CALCULATED-DESIGNED BY / CHECKED BY
REVISED BY / DATE REVISED

LAST REVISION 00-00-00
DATE PLOTTED => 8/24/2010
TIME PLOTTED => 11:40:25 AM

Dist	COUNTY	ROUTE	POST MILES TOTAL PROJECT	SHEET No.	TOTAL SHEETS
04	Ala	80	1.8/2.1	6	47

David Williams 6/10/09
REGISTERED CIVIL ENGINEER DATE

PLANS APPROVAL DATE

REGISTERED PROFESSIONAL ENGINEER David Andrew Williams No. C58697 Exp. 12/31/10 CIVIL STATE OF CALIFORNIA

THE STATE OF CALIFORNIA OR ITS OFFICERS OR AGENTS SHALL NOT BE RESPONSIBLE FOR THE ACCURACY OR COMPLETENESS OF SCANNED COPIES OF THIS PLAN SHEET.

BAY AREA TOLL AUTHORITY
101 EIGHTH STREET
OAKLAND, CA 94607

URS CORPORATION
55 SOUTH MARKET STREET
SUITE 1500
SAN JOSE, CA 95113-2332

LEGEND

TEMPORARY DRAINAGE INLET PROTECTION

TFESA — TEMPORARY FENCE (TYPE ESA)

ESA AREA

ABBREVIATIONS:

ESA ENVIRONMENTALLY SENSITIVE AREA

TEMPORARY WATER POLLUTION CONTROL QUANTITIES

ITEM	UNIT	QUANTITY
TEMPORARY FENCE (TYPE ESA)	LF	3675
TEMPORARY DRAINAGE INLET PROTECTION	EA	16

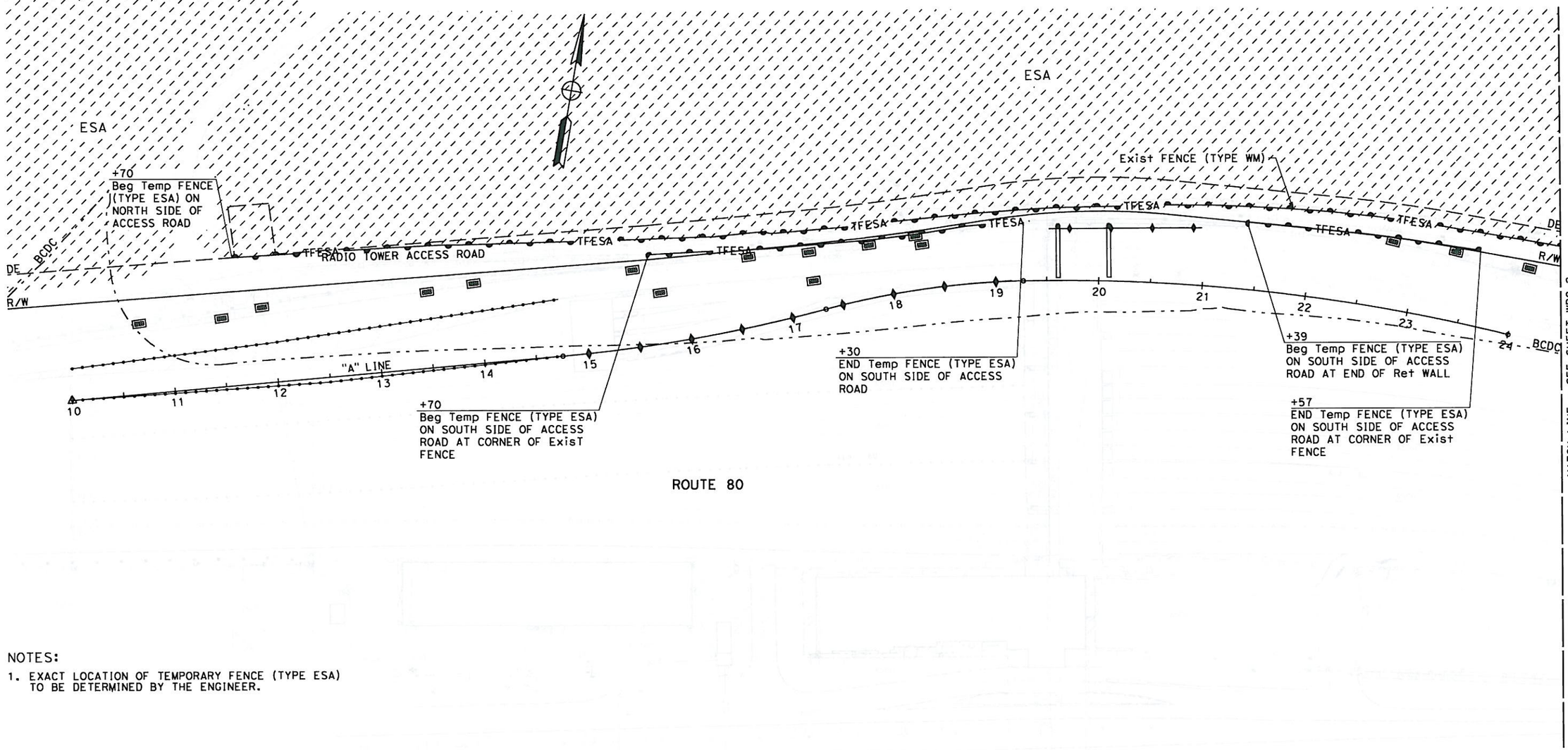

NOTES:

1. EXACT LOCATION OF TEMPORARY FENCE (TYPE ESA) TO BE DETERMINED BY THE ENGINEER.

AS BUILT
(NO CORRECTIONS ON THIS SHEET)
CONTRACT No. 0G420K, 6A7A-006
C.C.A. DATE 6.18.2010
R.E. NAME BRUCE GREENCHELL

THIS PLAN ACCURATE FOR TEMPORARY WATER POLLUTION CONTROL WORK ONLY.

TEMPORARY WATER POLLUTION CONTROL PLAN

SCALE: 1" = 50' **WPC-1**

STATE OF CALIFORNIA - DEPARTMENT OF TRANSPORTATION
Caltrans
CONSULTANT FUNCTIONAL SUPERVISOR: LARRY JONES
CALCULATED-DESIGNED BY
CHECKED BY
REVISED BY
DATE REVISED

LAST REVISION 00-00-00
DATE PLOTTED => 8/24/2010
TIME PLOTTED => 11:12:36 AM

Dist	COUNTY	ROUTE	POST MILES TOTAL PROJECT	SHEET No.	TOTAL SHEETS
04	Ala	80	1.8/2.1	7	47

David Williams 6/10/09
REGISTERED CIVIL ENGINEER DATE

PLANS APPROVAL DATE

REGISTERED PROFESSIONAL ENGINEER David Andrew Williams No. C58697 Exp. 12/31/10 CIVIL STATE OF CALIFORNIA

THE STATE OF CALIFORNIA OR ITS OFFICERS OR AGENTS SHALL NOT BE RESPONSIBLE FOR THE ACCURACY OR COMPLETENESS OF SCANNED COPIES OF THIS PLAN SHEET.

BAY AREA TOLL AUTHORITY
101 EIGHTH STREET
OAKLAND, CA 94607

URS CORPORATION
55 SOUTH MARKET STREET
SUITE 1500
SAN JOSE, CA 95113-2332

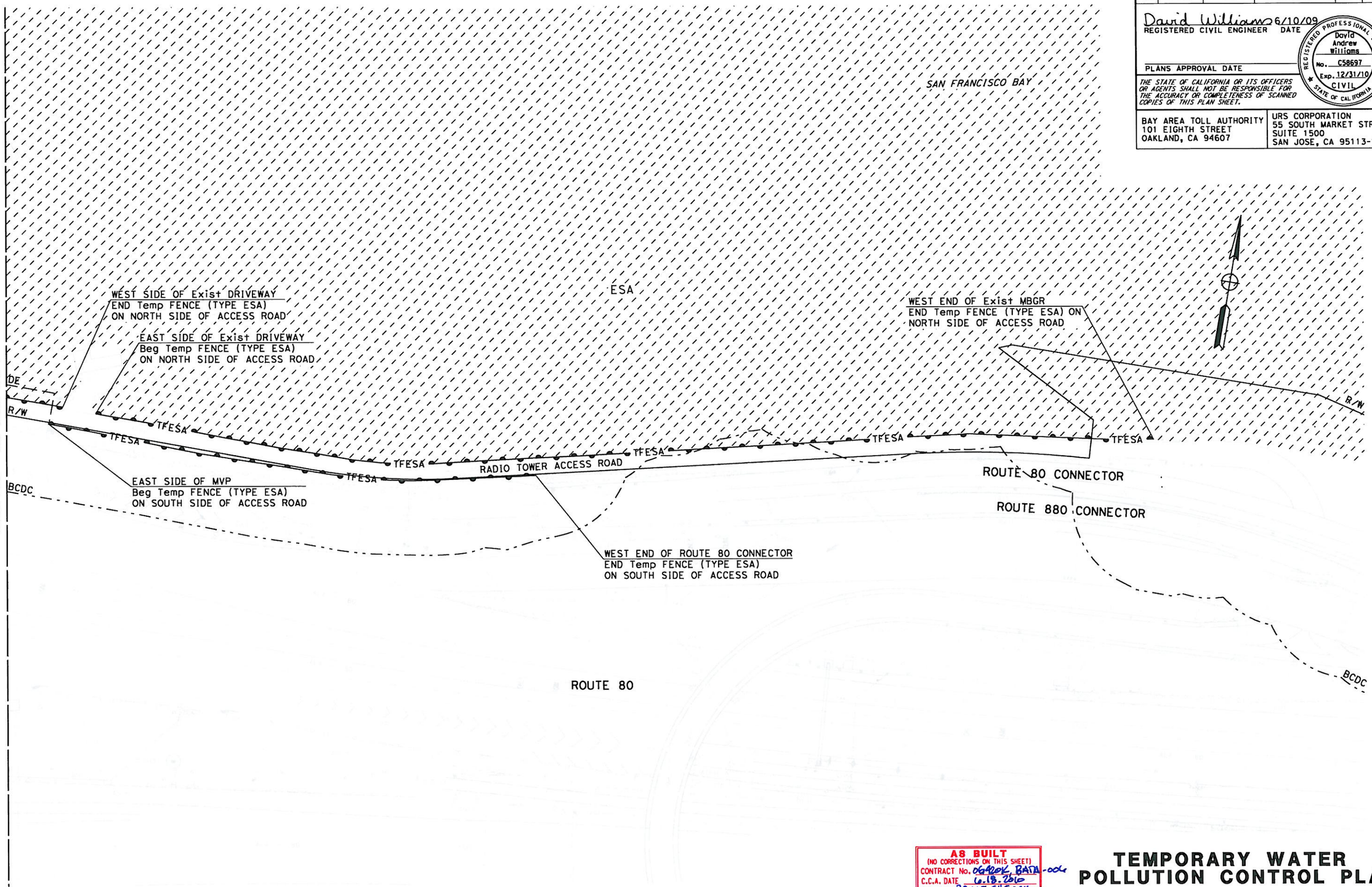

THIS PLAN ACCURATE FOR TEMPORARY WATER POLLUTION CONTROL WORK ONLY.

AS BUILT
(NO CORRECTIONS ON THIS SHEET)
CONTRACT No. 0G420K, BATA-006
C.C.A. DATE 6.18.2010
R.E. NAME BRUCE SHERWOOD

TEMPORARY WATER POLLUTION CONTROL PLAN

SCALE: 1" = 50' **WPC-2**

STATE OF CALIFORNIA - DEPARTMENT OF TRANSPORTATION
Caltrans

CONSULTANT FUNCTIONAL SUPERVISOR: LARRY JONES
CALCULATED-DESIGNED BY
CHECKED BY
REVISED BY
DATE REVISED

LAST REVISION 00-00-00
DATE PLOTTED => 8/24/2010
TIME PLOTTED => 11:12:44 AM

BORDER LAST REVISED 4/11/2008
RELATIVE BORDER SCALE IS IN INCHES 0 1 2 3
USERNAME => carol_doehne
DGN FILE => SFOBBORT_WPC02.dgn
CU 00000
EA 0G420K

Dist	COUNTY	ROUTE	POST MILES TOTAL PROJECT	SHEET No.	TOTAL SHEETS
04	Ala	80	1.8/2.1	8	47

David Williams 6/10/09
REGISTERED CIVIL ENGINEER DATE

PLANS APPROVAL DATE

REGISTERED PROFESSIONAL ENGINEER David Andrew Williams No. C58697 Exp. 12/31/10 CIVIL STATE OF CALIFORNIA

THE STATE OF CALIFORNIA OR ITS OFFICERS OR AGENTS SHALL NOT BE RESPONSIBLE FOR THE ACCURACY OR COMPLETENESS OF SCANNED COPIES OF THIS PLAN SHEET.

BAY AREA TOLL AUTHORITY
101 EIGHTH STREET
OAKLAND, CA 94607

URS CORPORATION
55 SOUTH MARKET STREET
SUITE 1500
SAN JOSE, CA 95113-2332

LEGEND

DRAINAGE SYSTEM

DRAINAGE UNIT

ABBREVIATIONS

DIP DUCTILE IRON PIPE
HDPE HIGH-DENSITY POLYETHYLENE

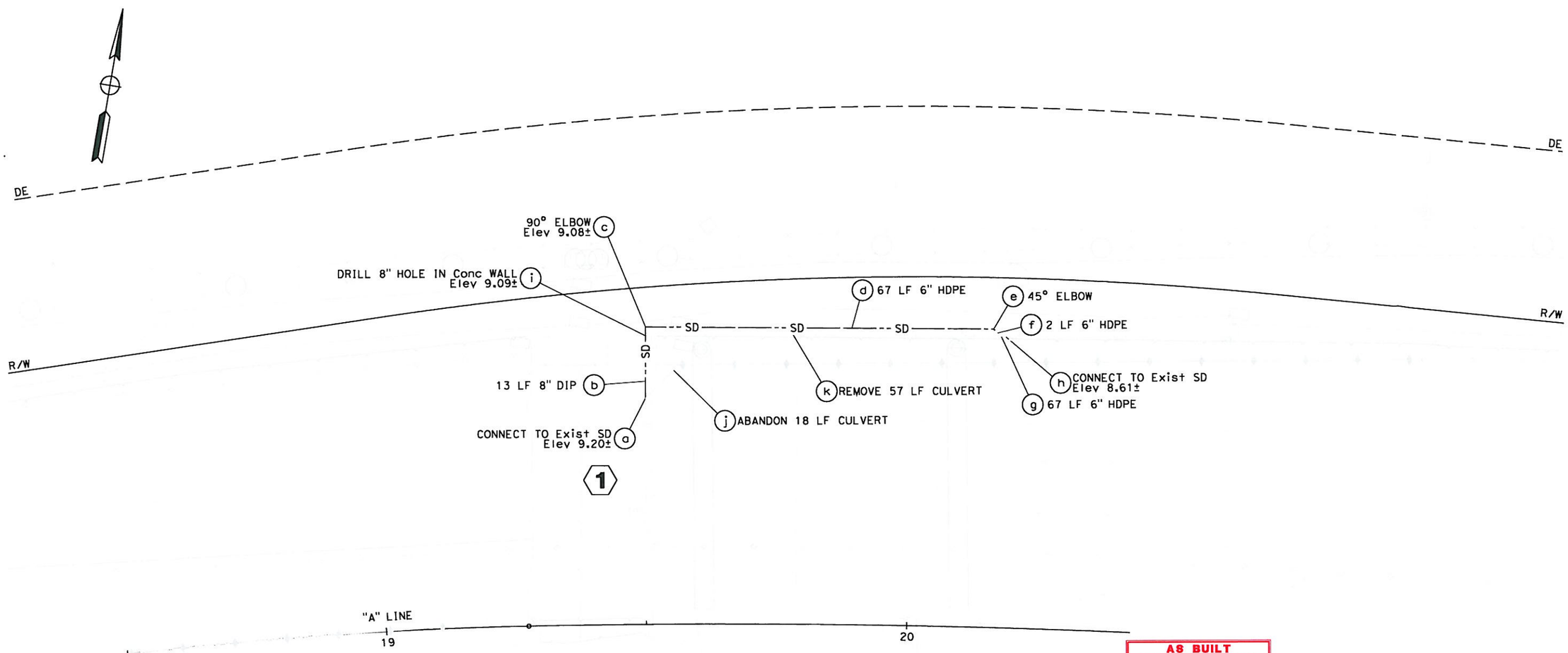

AS BUILT
(NO CORRECTIONS ON THIS SHEET)
CONTRACT No. 06420K, 06420A-00K
C.C.A. DATE 6.13.2010
R.E. NAME BRUCE OTTENWELLER

THIS PLAN ACCURATE FOR DRAINAGE WORK ONLY.

DRAINAGE PLAN

SCALE: 1" = 10'

D-1

REVISED BY | DATE REVISED
CALCULATED-DESIGNED BY | CHECKED BY
CONSULTANT FUNCTIONAL SUPERVISOR: LARRY JONES
STATE OF CALIFORNIA - DEPARTMENT OF TRANSPORTATION
Caltrans

LAST REVISION 00-00-00 | DATE PLOTTED => 8/24/2010 | TIME PLOTTED => 11:12:50 AM

BORDER LAST REVISED 4/11/2008 | RELATIVE BORDER SCALE IS IN INCHES 0 1 2 3 | USERNAME => carol_doehne | DGN FILE => SFOBBORT_D01.dgn | CU 00000 | EA 06420K

Dist	COUNTY	ROUTE	POST MILES TOTAL PROJECT	SHEET No.	TOTAL SHEETS
04	Ala	80	1.8/2.1	9	47

David Williams 6/10/09
REGISTERED CIVIL ENGINEER DATE

PLANS APPROVAL DATE

REGISTERED PROFESSIONAL ENGINEER David Andrew Williams No. C58697 Exp. 12/31/10 CIVIL STATE OF CALIFORNIA

THE STATE OF CALIFORNIA OR ITS OFFICERS OR AGENTS SHALL NOT BE RESPONSIBLE FOR THE ACCURACY OR COMPLETENESS OF SCANNED COPIES OF THIS PLAN SHEET.

BAY AREA TOLL AUTHORITY
101 EIGHTH STREET
OAKLAND, CA 94607

URS CORPORATION
55 SOUTH MARKET STREET
SUITE 1500
SAN JOSE, CA 95113-2332

NOTES:

1. ALL UTILITIES SHOWN ON THESE PLANS ARE BASED UPON RECORD INFORMATION OBTAINED FROM UTILITY OWNERS AND/OR FIELD SURVEYS OF EXISTING UTILITY SURFACE FEATURES.
2. LOCATION OF UTILITY FACILITIES SHOWN ON THESE PLANS ARE APPROXIMATE AND SHALL BE VERIFIED BY THE CONTRACTOR PRIOR TO CONSTRUCTION.
3. THE GAS LINE VALVE IS LOCATED IN THE BOILER ROOM OF THE TOLL PLAZA Admin Bldg.
4. THE WATER LINE VALVE IS LOCATED ALONG THE EASTERN WALL OF THE UTILITY TUNNEL Approx 14' NORTH OF THE FOUNDATION ℄ FOR COLUMN B-2.
5. CONTRACTOR TO EXTEND ELECTRICAL AND COMMUNICATION LINES ALONG THE EAST WALL OF THE UTILITY TUNNEL AND RE-ESTABLISH CONNECTIVITY ALONG RADIO TOWER ACCESS ROAD AS REQUIRED. ALL Exist CONDUITS EXTENDED SHALL BE CAPPED.
6. CONTRACTOR TO HAND-DIG TO CONFIRM AND VERIFY EXISTING UTILITIES FOR ALL RELOCATION WORK.
7. ALL Exist PULL BOXES AND MATERIALS REMOVED AND SALVAGED SHALL BE COORDINATED WITH AND DIRECTED BY CALTRANS.
8. FIBER OPTIC LINES IN Exist PULL BOX SHALL BE MOVED AND RE-TERMINATED AS APPROVED BY THE ORT SYSTEMS INTEGRATOR. CONTRACTOR TO DETERMINE IF SUFFICIENT SLACK IS AVAILABLE IN THE FIBER OPTIC CABLE OR IF A SPLICE ENCLOSURE WILL BE REQUIRED IN THE RELOCATED PULL BOX. ALL FIBER RELOCATION, INCLUDING ANY DOWN-TIME WORK SHALL BE COORDINATED WITH THE ORT SYSTEMS INTEGRATOR AND THE BAY AREA TOLL AUTHORITY.

POTHOLE No.	UTILITY OWNER	UTILITY DESCRIPTION	DEPTH FT	DATE	REMARKS	NORTHING	EASTING
PH-1	CALTRANS	2" WATER	2'-2"	6/9/2009		2128045.902	6037756.954
	AT&T	FIBER OPTIC	3'-3"	6/18/2009	1' DIRECTLY BELOW WATER		
PH-2	CALTRANS	ELECTRIC (LIGHTING)	0'-4"	6/9/2009	CONCRETE CASING	2128052.678	6037767.417
PH-3	CALTRANS	FIBER OPTIC (HYBRID)			CONCRETE CASING	2128061.909	6037816.695
PH-4	DELETED						
PH-5	CALTRANS	FIBER OPTIC (HYBRID)	7'-7"	6/9/2009		2128045.902	6037756.954
PH-6	CALTRANS	ELECTRIC (LIGHTING)	6'-5"	6/10/2009		2128039.699	6037767.965
PH-7	CALTRANS	ELECTRIC	3'-2"	6/10/2009		2128038.614	6037762.064
PH-8		FOUNDATION EDGE	5'-3"	6/9/2009		2128047.430	6037766.698
PH-9		FOUNDATION EDGE	7'-0"	6/9/2009		2128056.819	6037817.603
PH-10	AT&T	FIBER OPTIC	2'-10"	6/18/2009	CONCRETE CASING	2128050.463	6037723.424

NOTE: COORDINATES BASED ON FIELD MEASUREMENTS AND ARE APPROXIMATE.

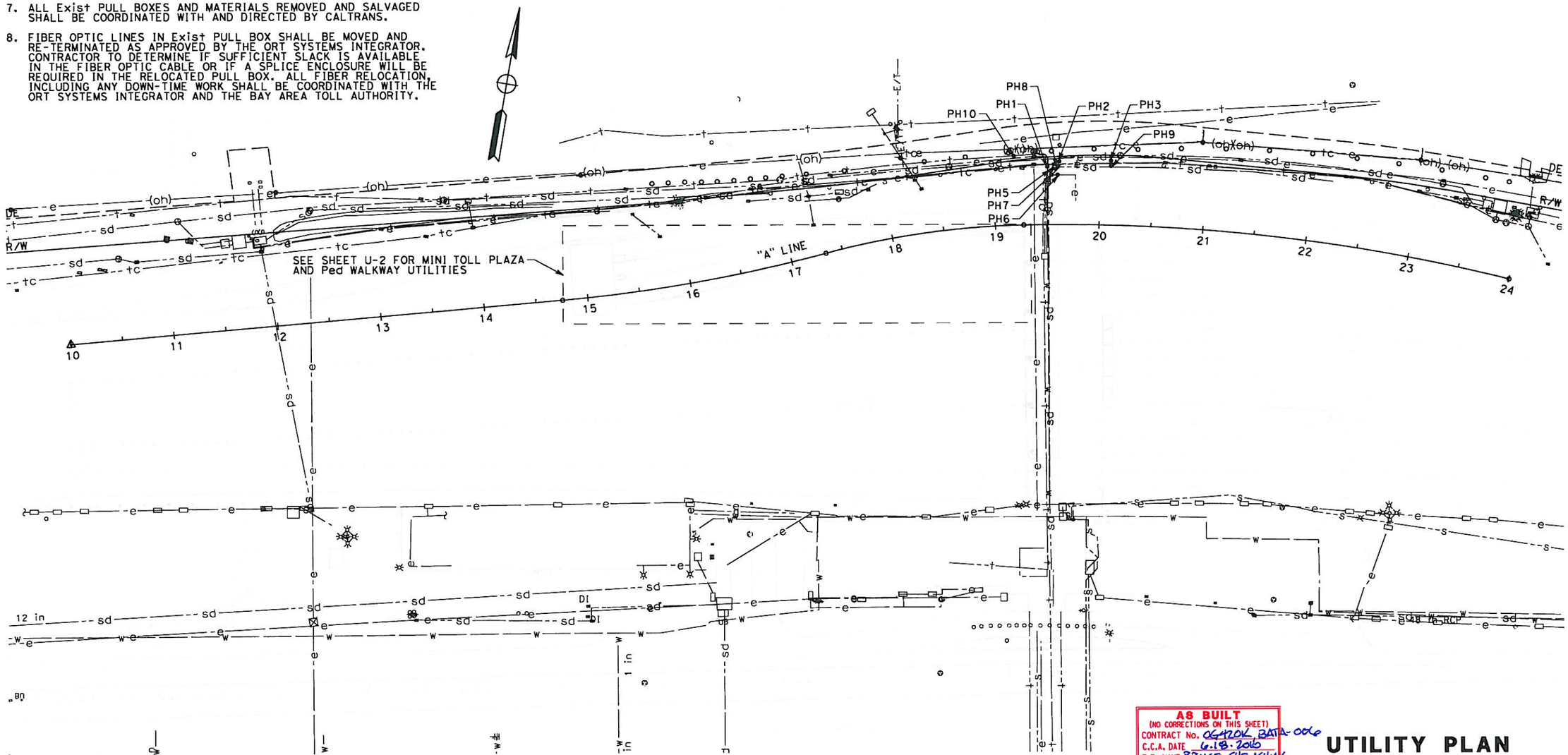

AS BUILT
(NO CORRECTIONS ON THIS SHEET)
CONTRACT No. 0G420K, BATA-006
C.C.A. DATE 6-18-2010
R.E. NAME BRUCE SHEWCHUK

THIS PLAN ACCURATE FOR UTILITIES ONLY.

UTILITY PLAN

SCALE: 1" = 50'

U-1

STATE OF CALIFORNIA - DEPARTMENT OF TRANSPORTATION
Caltrans
CONSULTANT FUNCTIONAL SUPERVISOR: LARRY JONES
CALCULATED-DESIGNED BY
CHECKED BY
REVISED BY
DATE REVISED

LAST REVISION 00-00-00
DATE PLOTTED => 8/24/2010
TIME PLOTTED => 11:12:53 AM

BORDER LAST REVISED 4/11/2008
RELATIVE BORDER SCALE IS IN INCHES 0 1 2 3
USERNAME => carol_doehne
DGN FILE => SFOBBORT_U01.dgn
CU 00000
EA 0G420K

Dist	COUNTY	ROUTE	POST MILES TOTAL PROJECT	SHEET No.	TOTAL SHEETS
04	Ala	80	1.8/2.1	10	47

David Williams 6/10/09
REGISTERED CIVIL ENGINEER DATE

PLANS APPROVAL DATE

REGISTERED PROFESSIONAL ENGINEER David Andrew Williams No. C58697 Exp. 12/31/10 CIVIL STATE OF CALIFORNIA

THE STATE OF CALIFORNIA OR ITS OFFICERS OR AGENTS SHALL NOT BE RESPONSIBLE FOR THE ACCURACY OR COMPLETENESS OF SCANNED COPIES OF THIS PLAN SHEET.

BAY AREA TOLL AUTHORITY
101 EIGHTH STREET
OAKLAND, CA 94607

URS CORPORATION
55 SOUTH MARKET STREET
SUITE 1500
SAN JOSE, CA 95113-2332

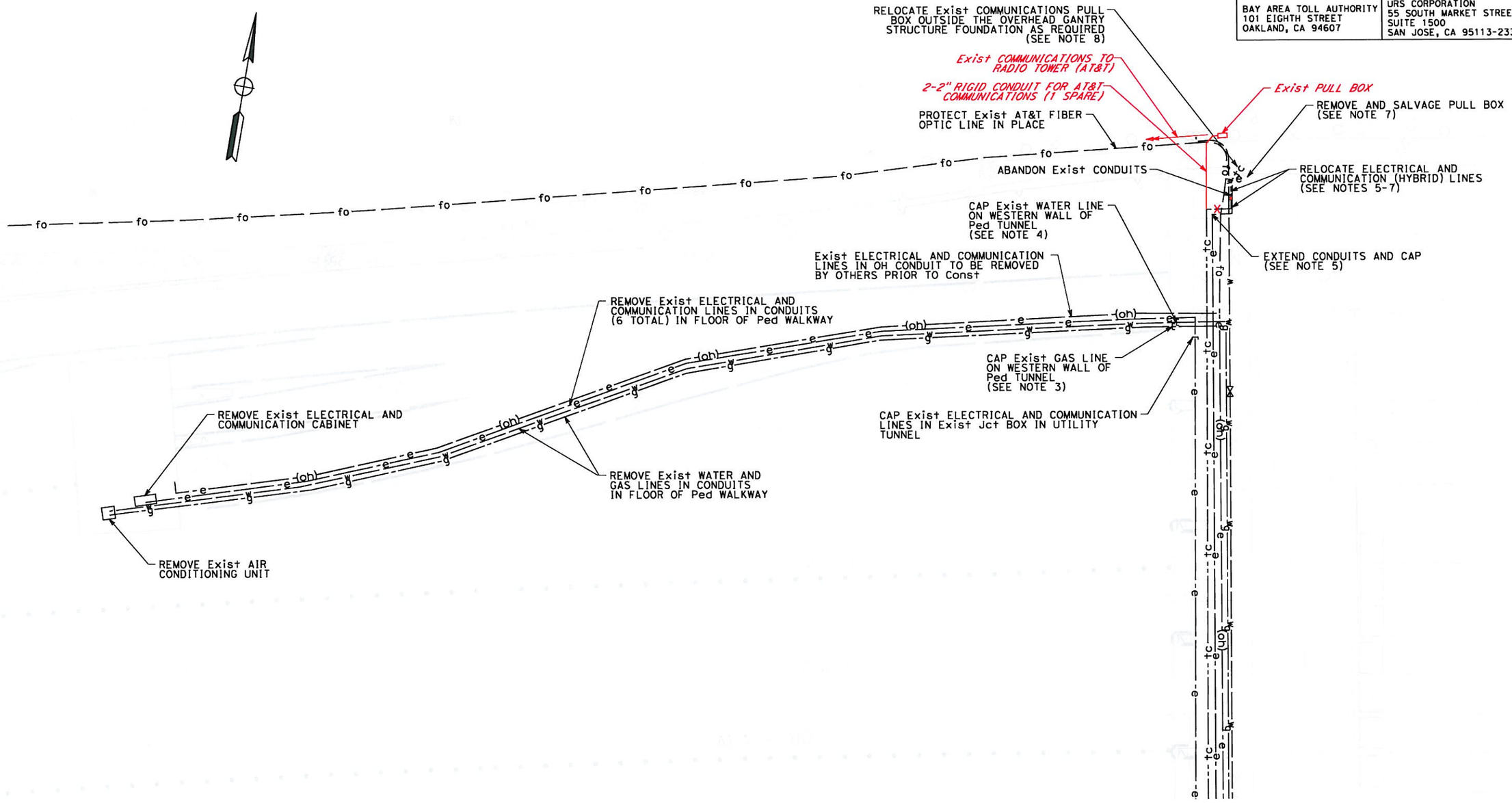

THIS PLAN ACCURATE FOR UTILITIES ONLY.

AS BUILT
CONTRACT No. 06420K BATA code
C.C.A. DATE 6.18.2010
R.E. NAME BRUCE SHEWCHUK

UTILITY PLAN

SCALE: 1" = 20'

U-2

STATE OF CALIFORNIA - DEPARTMENT OF TRANSPORTATION
Caltrans

CONSULTANT FUNCTIONAL SUPERVISOR: LARRY JONES

CALCULATED-DESIGNED BY | CHECKED BY | REVISED BY | DATE REVISED

LAST REVISION 00-00-00 | DATE PLOTTED => 8/24/2010 | TIME PLOTTED => 11:52:52 AM

BORDER LAST REVISED 4/11/2008 | RELATIVE BORDER SCALE IS IN INCHES 0 1 2 3 | USERNAME => carol_doehne | DGN FILE => SFOBBORT_U02.dgn | CU 00000 | EA 0G420K

Dist	COUNTY	ROUTE	POST MILES TOTAL PROJECT	SHEET No.	TOTAL SHEETS
04	Ala	80	1.8/2.1	11	47

David Williams 6/10/09
REGISTERED CIVIL ENGINEER DATE

PLANS APPROVAL DATE

REGISTERED PROFESSIONAL ENGINEER David Andrew Williams No. C58697 Exp. 12/31/10 CIVIL STATE OF CALIFORNIA

THE STATE OF CALIFORNIA OR ITS OFFICERS OR AGENTS SHALL NOT BE RESPONSIBLE FOR THE ACCURACY OR COMPLETENESS OF SCANNED COPIES OF THIS PLAN SHEET.

BAY AREA TOLL AUTHORITY
101 EIGHTH STREET
OAKLAND, CA 94607

URS CORPORATION
55 SOUTH MARKET STREET
SUITE 1500
SAN JOSE, CA 95113-2332

NOTES:

1. EXACT LOCATION AND POSITION OF CONSTRUCTION AREA SIGNS TO BE DETERMINED BY THE ENGINEER.
2. COVER AND UNCOVER SIGN PANELS AS DIRECTED BY THE ENGINEER.
3. ADVANCE INFORMATION SIGNS TO BE INSTALLED SEVEN (7) DAYS PRIOR TO CLOSURE.
4. FOR Temp CLOSURE OF ROUTE 80 AND ROUTE 880 BUS/CARPOOL CONNECTORS, USE Std PLAN T-14.
5. FOR Temp CLOSURE OF FASTRAK LANE 18, USE Std PLAN T-10.
6. FOR ADDITIONAL CONSTRUCTION AREA SIGNS, REFER TO SHEET TH-1.

CONSTRUCTION AREA SIGNS

SIGN No.	CODE	MESSAGE	PANEL SIZE	No. OF POSTS & SIZE	QUANTITY
1	G20-2	END ROAD WORK	36"x18"	1 - 4"x4"	1
2	G20-2	END ROAD WORK	36"x18"	1 - 4"x4"	1
3	W20-1	ROAD WORK AHEAD	36"x36"	1 - 4"x4"	1
4	W20-1	ROAD WORK AHEAD	36"x36"	1 - 4"x4"	1
5	W20-1	ROAD WORK AHEAD	36"x36"	1 - 4"x4"	1
6	W20-1	ROAD WORK AHEAD	36"x36"	1 - 4"x4"	1
7	G20-2	END ROAD WORK	36"x36"	1 - 4"x4"	1

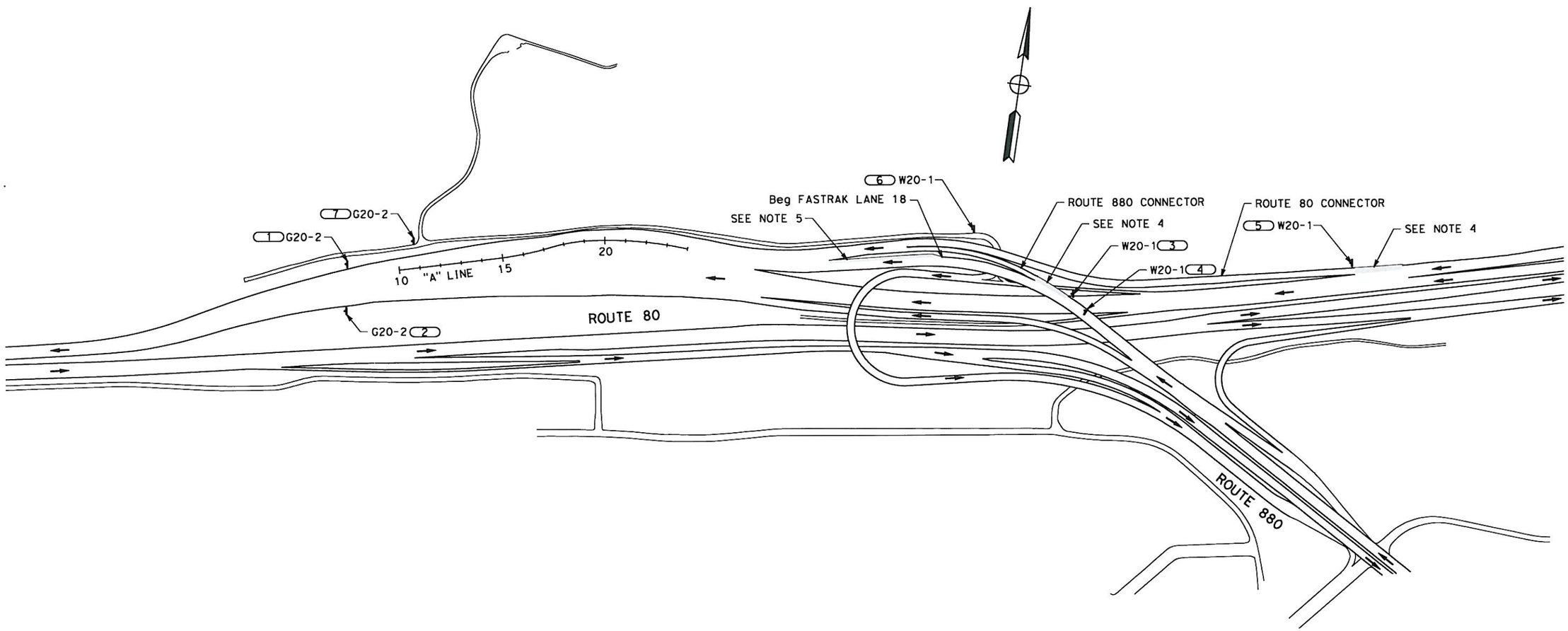

AS BUILT
(NO CORRECTIONS ON THIS SHEET)
CONTRACT No. 04-420K BATA-00
C.C.A. DATE 6.18.2010
R.E. NAME BRUCE J. SHEWCHUK

THIS PLAN ACCURATE FOR CONSTRUCTION AREA SIGN WORK ONLY

CONSTRUCTION AREA SIGNS

NO SCALE

CS-1

STATE OF CALIFORNIA - DEPARTMENT OF TRANSPORTATION
Caltrans

CONSULTANT FUNCTIONAL SUPERVISOR: LARRY JONES

CALCULATED-DESIGNED BY
CHECKED BY
REVISED BY
DATE REVISED

LAST REVISION 00-00-00
DATE PLOTTED => 8/24/2010
TIME PLOTTED => 11:13:04 AM

BORDER LAST REVISED 4/11/2008

RELATIVE BORDER SCALE IS IN INCHES 0 1 2 3

USERNAME => carol_doehne
DGN FILE => SFOBBORT_CS01.dgn

CU 00000

EA 0G420K

Dist	COUNTY	ROUTE	POST MILES TOTAL PROJECT	SHEET No.	TOTAL SHEETS
04	Ala	80	1.8/2.1	12	47

David Williams 6/10/09
REGISTERED CIVIL ENGINEER DATE

PLANS APPROVAL DATE

REGISTERED PROFESSIONAL ENGINEER David Andrew Williams No. C58697 Exp. 12/31/10 CIVIL STATE OF CALIFORNIA

THE STATE OF CALIFORNIA OR ITS OFFICERS OR AGENTS SHALL NOT BE RESPONSIBLE FOR THE ACCURACY OR COMPLETENESS OF SCANNED COPIES OF THIS PLAN SHEET.

BAY AREA TOLL AUTHORITY
101 EIGHTH STREET
OAKLAND, CA 94607

URS CORPORATION
55 SOUTH MARKET STREET
SUITE 1500
SAN JOSE, CA 95113-2332

NOTES

1. REFER TO SHEET CS-1 FOR ADDITIONAL CONSTRUCTION AREA SIGNS
2. LOCATIONS OF CONSTRUCTION AREA SIGNS SHOWN ARE APPROXIMATE. EXACT LOCATIONS TO BE DETERMINED BY THE ENGINEER.
3. Temp RAILING (TYPE K) TO BE INSTALLED AFTER REMOVAL OF Conc BARRIER (TYPE 50) SHOWN ON SHEET L-1.

LEGEND

Temp RAILING (TYPE K)

CONSTRUCTION AREA SIGN

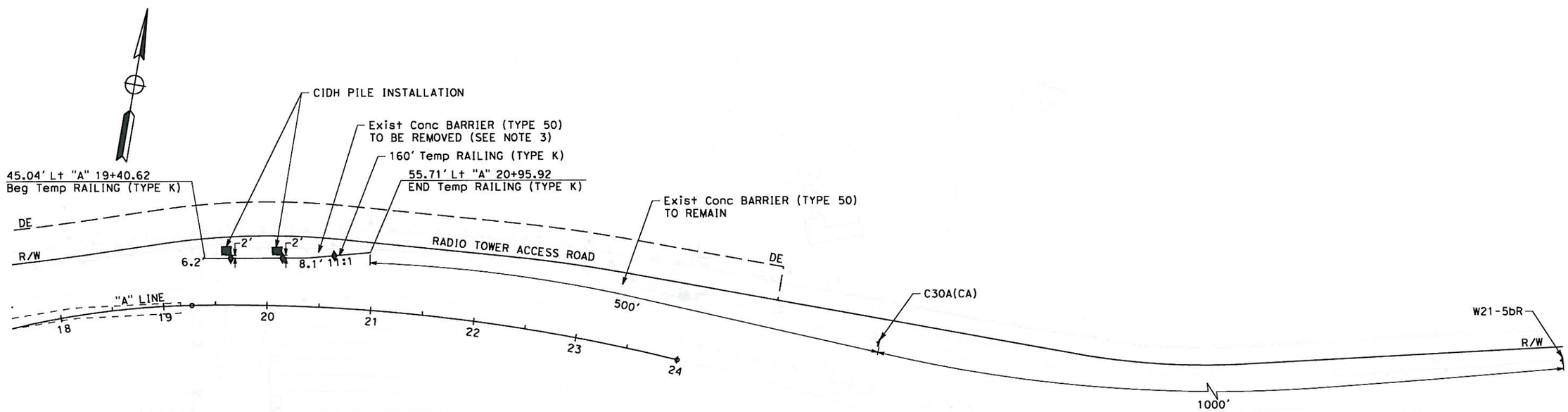

ROUTE 80

THIS PLAN ACCURATE FOR STAGE CONSTRUCTION WORK ONLY.

AS BUILT
(NO CORRECTIONS ON THIS SHEET)
CONTRACT No. 0G420K BUA1A-00d
C.C.A. DATE 6.18.2010
R.E. NAME BRUCE J. GHEWCHUK

TRAFFIC HANDLING PLAN

SCALE: 1" = 50'

TH-1

STATE OF CALIFORNIA - DEPARTMENT OF TRANSPORTATION
Caltrans

CONSULTANT FUNCTIONAL SUPERVISOR: LARRY JONES

CALCULATED-DESIGNED BY | CHECKED BY

REVISED BY | DATE REVISED

LAST REVISION 00-00-00

DATE PLOTTED => 8/24/2010
TIME PLOTTED => 11:13:08 AM

Dist	COUNTY	ROUTE	POST MILES TOTAL PROJECT	SHEET No.	TOTAL SHEETS
04	Ala	80	1.8/2.1	13	47

David Williams 6/10/09
REGISTERED CIVIL ENGINEER DATE

PLANS APPROVAL DATE

REGISTERED PROFESSIONAL ENGINEER David Andrew Williams No. C58697 Exp. 12/31/10 CIVIL STATE OF CALIFORNIA

THE STATE OF CALIFORNIA OR ITS OFFICERS OR AGENTS SHALL NOT BE RESPONSIBLE FOR THE ACCURACY OR COMPLETENESS OF SCANNED COPIES OF THIS PLAN SHEET.

BAY AREA TOLL AUTHORITY
101 EIGHTH STREET
OAKLAND, CA 94607

URS CORPORATION
55 SOUTH MARKET STREET
SUITE 1500
SAN JOSE, CA 95113-2332

NOTES:

1. CONTRACTOR SHALL BE RESPONSIBLE FOR REMOVING EXISTING STRIPING AND PAVEMENT MARKINGS "A" 10+00 TO "A" 23+00 THAT CONFLICT WITH NEW STRIPING AND PAVEMENT MARKINGS AS DETERMINED BY THE ENGINEER. REFER TO SHEET 0-1 FOR LOCATIONS OF REMOVAL.
2. ALL STRIPES AND PAVEMENT MARKINGS SHALL BE THERMOPLASTIC UNLESS OTHERWISE NOTED ON THE PLAN.
3. POINT OF CHEVRONS TO BE CENTERED BETWEEN LANES.

LEGEND

- (No.) STRIPE DETAIL NUMBER
- [A] DIAMOND SYMBOL PAVEMENT MARKING
- [B] MARKING DETAIL B - SEE DETAIL THIS SHEET
- TYPE G ONE-WAY CLEAR RETROREFLECTIVE
- 4" WHITE LINE

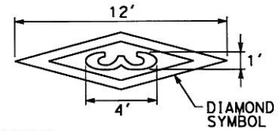

NOTES:
1. CENTER NUMERAL "3" INSIDE DIAMOND SYMBOL.

DETAIL A
NO SCALE

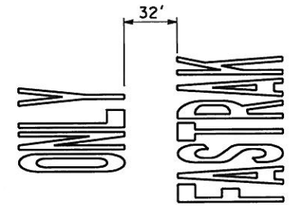

DETAIL B
NO SCALE

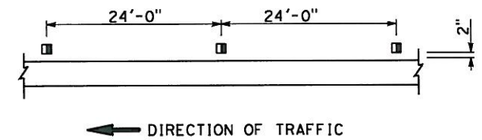

DETAIL C
NO SCALE

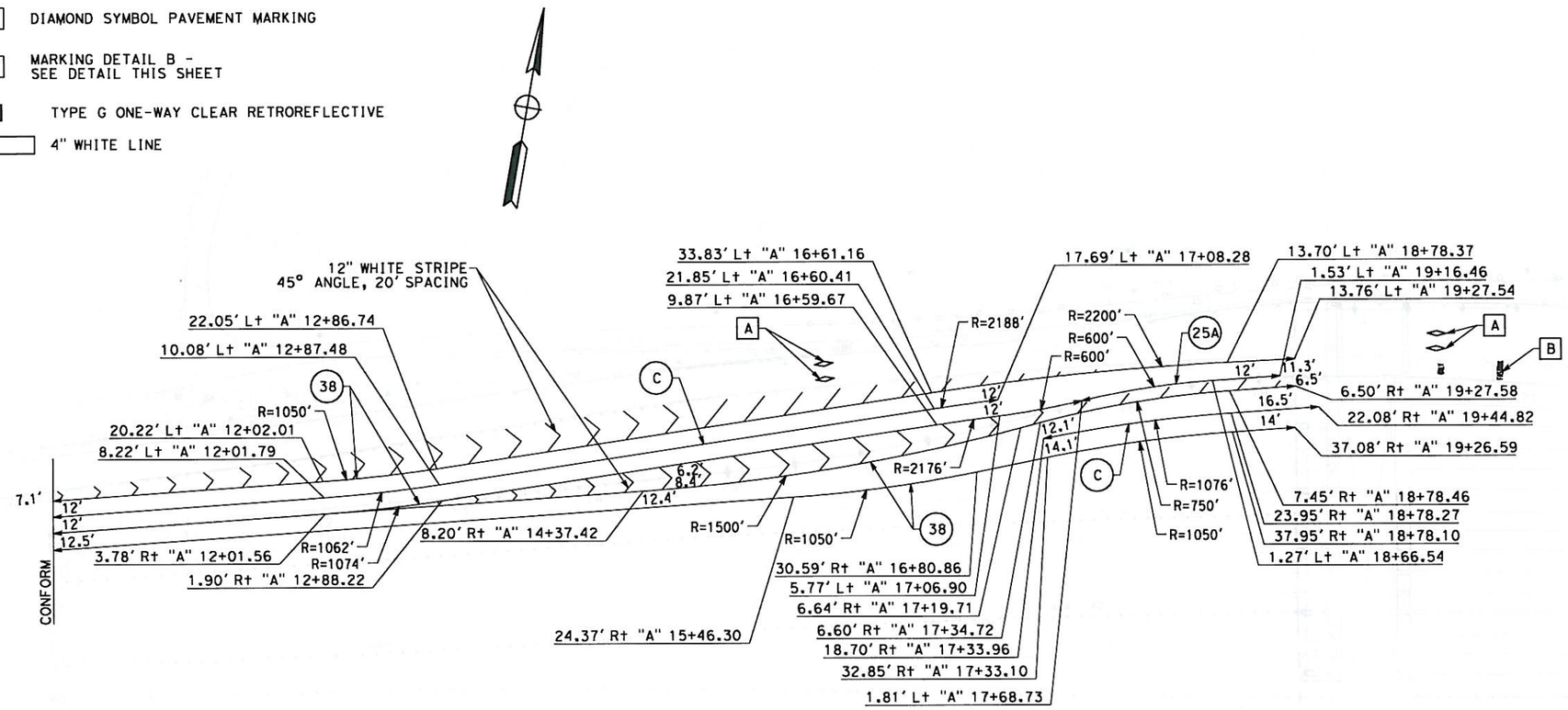

THIS PLAN ACCURATE FOR PAVEMENT DELINEATION WORK ONLY.

AS BUILT
(NO CORRECTIONS ON THIS SHEET)
CONTRACT No. 0G420K, BATA-006
C.C.A. DATE 6.18.2010
R.E. NAME BRUCE J. GHEWCHUK

PAVEMENT DELINEATION

SCALE: 1" = 50'

PD-1

REVISED BY	DATE REVISED

CALCULATED-DESIGNED BY
CHECKED BY

CONSULTANT FUNCTIONAL SUPERVISOR
LARRY JONES

STATE OF CALIFORNIA - DEPARTMENT OF TRANSPORTATION
Caltrans

LAST REVISION 00-00-00
DATE PLOTTED => 8/24/2010
TIME PLOTTED => 11:13:13 AM

BORDER LAST REVISED 4/11/2008

RELATIVE BORDER SCALE IS IN INCHES 0 1 2 3

USERNAME => carol_doehne
DGN FILE => SFOBBORT_PD01.dgn

CU 00000

EA 0G420K

Dist	COUNTY	ROUTE	POST MILES TOTAL PROJECT	SHEET No.	TOTAL SHEETS
04	Ala	80	1.8/2.1	14	47

David Williams 6/10/09
REGISTERED CIVIL ENGINEER DATE

PLANS APPROVAL DATE

REGISTERED PROFESSIONAL ENGINEER David Andrew Williams No. C58697 Exp. 12/31/10 CIVIL STATE OF CALIFORNIA

THE STATE OF CALIFORNIA OR ITS OFFICERS OR AGENTS SHALL NOT BE RESPONSIBLE FOR THE ACCURACY OR COMPLETENESS OF SCANNED COPIES OF THIS PLAN SHEET.

BAY AREA TOLL AUTHORITY
101 EIGHTH STREET
OAKLAND, CA 94607

URS CORPORATION
55 SOUTH MARKET STREET
SUITE 1500
SAN JOSE, CA 95113-2332

THERMOPLASTIC PAVEMENT MARKING QUANTITIES

STATION	DESCRIPTION	SQFT
49.29' Lt "A" 15+74.59	DIAMOND SYMBOL + "3"	13
61.98' Lt "A" 15+75.22	DIAMOND SYMBOL + "3"	13
22.29' Lt "A" 20+24.53	DIAMOND SYMBOL + "3"	13
33.37' Lt "A" 20+24.74	DIAMOND SYMBOL + "3"	13
35.41' Lt "A" 22+86.63	DIAMOND SYMBOL + "3"	13
24.25' Lt "A" 22+85.90	DIAMOND SYMBOL + "3"	13
7.00' Lt "A" 20+35.61	FASTRAK ONLY	67
TOTAL		145

PAVEMENT DELINEATION QUANTITIES

STATION		DETAIL No.	4" THERMOPLASTIC TRAFFIC STRIPE		8" THERMOPLASTIC TRAFFIC STRIPE	12" THERMOPLASTIC TRAFFIC STRIPE	PAVEMENT MARKER (RETROREFLECTIVE)	
			YELLOW	WHITE	WHITE	WHITE	TYPE G	TYPE H
			LF	LF	LF	LF	EA	EA
METERING LIGHTS	17.69' Lt "A" 17+08.28	C		705			30	
3.78' Rt "A" 12+01.56	1.81' Lt "A" 17+68.73	38			567		24	
METERING LIGHTS	13.76' Lt "A" 19+27.54	12" CHEVRON				567		
3.78' Rt "A" 12+01.56	6.50' Rt "A" 19+27.58	12" CHEVRON				381		
METERING LIGHTS	37.08' Rt "A" 19+26.59	38			925		39	
METERING LIGHTS	13.76' Lt "A" 19+27.54	38			925		39	
METERING LIGHTS	6.50' Rt "A" 19+27.58	38			928		39	
18.70' Rt "A" 17+33.96	22.08' Rt "A" 19+44.82	C		206			9	
1.81' Lt "A" 17+68.73	1.53' Lt "A" 19+16.46	25A	149					7
SUBTOTAL			149	911	3345	948	180	7
TOTAL			1060		3345	948	187	

AS BUILT
(NO CORRECTIONS ON THIS SHEET)
CONTRACT No. 0G420K BATA-006
C.C.A. DATE 6.18.2010
R.E. NAME BRUCE J. SHENGHUK

PAVEMENT DELINEATION QUANTITIES

PDQ-1

REVISED BY | DATE REVISED
CALCULATED-DESIGNED BY | CHECKED BY
CONSULTANT FUNCTIONAL SUPERVISOR: LARRY JONES
STATE OF CALIFORNIA - DEPARTMENT OF TRANSPORTATION
Caltrans

LAST REVISION 00-00-00 | DATE PLOTTED => 8/24/2010 | TIME PLOTTED => 11:13:19 AM

Dist	COUNTY	ROUTE	POST MILES TOTAL PROJECT	SHEET No.	TOTAL SHEETS
04	Ala	80	1.8/2.1	15	47

David Williams 6/10/09
REGISTERED CIVIL ENGINEER DATE

PLANS APPROVAL DATE

REGISTERED PROFESSIONAL ENGINEER David Andrew Williams No. C58697 Exp. 12/31/10 CIVIL STATE OF CALIFORNIA

THE STATE OF CALIFORNIA OR ITS OFFICERS OR AGENTS SHALL NOT BE RESPONSIBLE FOR THE ACCURACY OR COMPLETENESS OF SCANNED COPIES OF THIS PLAN SHEET.

BAY AREA TOLL AUTHORITY
101 EIGHTH STREET
OAKLAND, CA 94607

URS CORPORATION
55 SOUTH MARKET STREET
SUITE 1500
SAN JOSE, CA 95113-2332

NOTES:

1. THE MINIMUM VERTICAL CLEARANCES SHOWN ON THE PLANS SHALL BE PROVIDED BETWEEN THE FINISHED SURFACE OF THE ROADWAY AND THE BOTTOM OF ALL OVERHEAD GANTRY STRUCTURES.
2. GANTRY STRUCTURES TO BE FABRICATED AND DELIVERED TO PROJECT SITE BY OTHERS. CONTRACTOR TO INSTALL GANTRY STRUCTURES AND CMS PANELS, INCLUDING POWER AND COMMUNICATION CONNECTIONS.
3. ELECTRONIC TOLL COLLECTION EQUIPMENT TO BE FURNISHED AND INSTALLED BY OTHERS INCLUDING POWER AND COMMUNICATION CONNECTIONS.

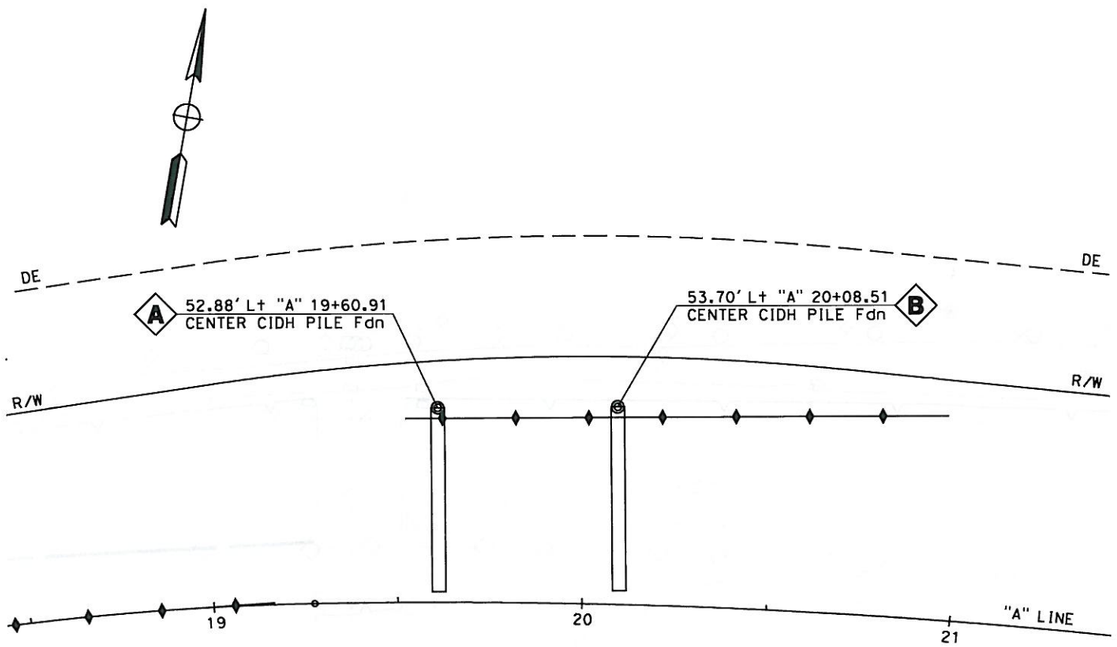

PLAN

SCALE: 1" = 20'

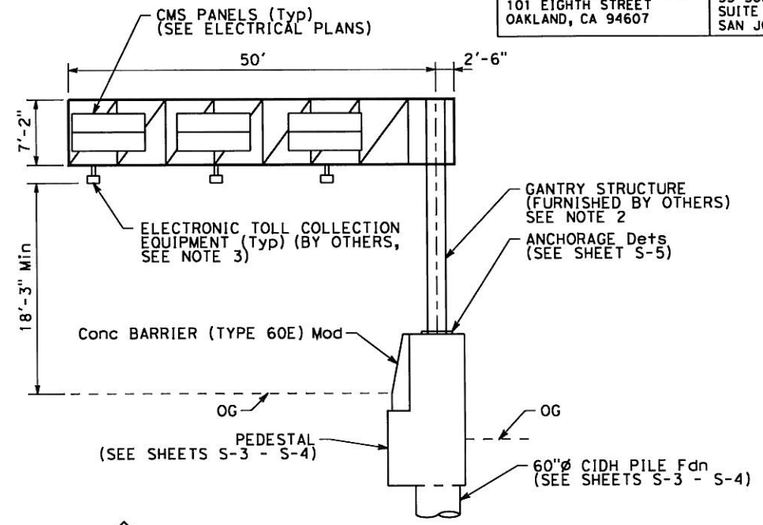

B INSTALL GANTRY STRUCTURE "A" LINE 20+08.51

NO SCALE

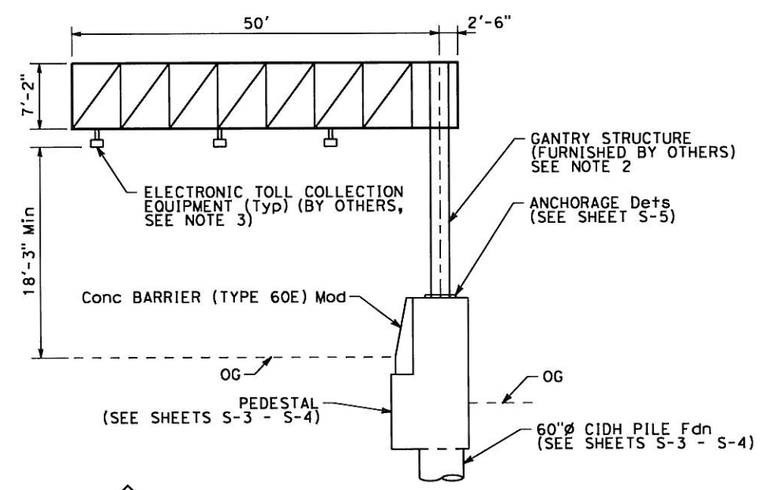

A INSTALL GANTRY STRUCTURE "A" LINE 19+60.91

NO SCALE

AS BUILT
(NO CORRECTIONS ON THIS SHEET)
CONTRACT No. 0G420K BATA-006
C.C.A. DATE 6.18.2010
R.E. NAME BRUCE J. SHEWCHUK

THIS PLAN ACCURATE FOR SIGN WORK ONLY.

SIGN PLAN AND DETAILS

SCALE AS SHOWN

S-1

REVISED BY | DATE REVISED

CALCULATED-DESIGNED BY | CHECKED BY

CONSULTANT FUNCTIONAL SUPERVISOR: LARRY JONES

STATE OF CALIFORNIA - DEPARTMENT OF TRANSPORTATION

Caltrans

LAST REVISION 00-00-00 | DATE PLOTTED => 8/24/2010 | TIME PLOTTED => 11:13:23 AM

BORDER LAST REVISED 4/11/2008 | RELATIVE BORDER SCALE IS IN INCHES 0 1 2 3 | USERNAME => carol_doehne | DGN FILE => SFOBBORT_S01.dgn | CU 00000 | EA 0G420K

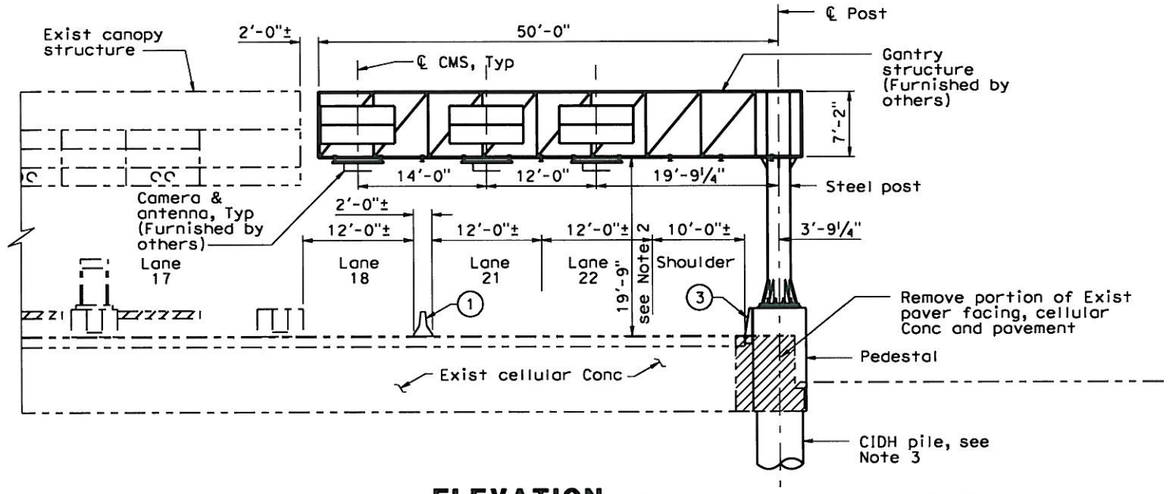

ELEVATION
1/8" = 1'-0"
(Gantry B shown, Gantry A similar)

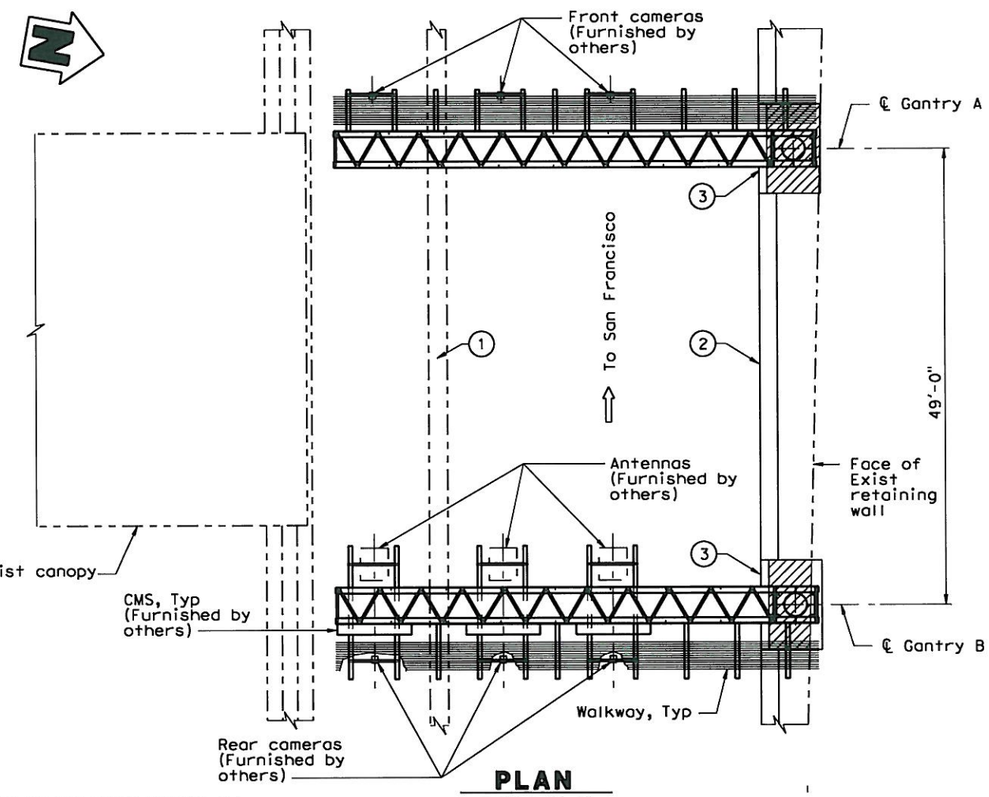

PLAN
1/8" = 1'-0"

Note:
The Contractor shall verify all controlling field dimensions before ordering or fabricating any material.

GENERAL NOTES:

DESIGN:

AASHTO Specifications for Structural Supports for Highway Signs, Luminaires and Traffic Signals, dated 2001.

CONSTRUCTION:

Standard Specifications and the Special Provisions.

LOADING:

WIND LOADING:

Normal to face of sign: 40.3 psf on 100% Truss surface area (i.e. 100% panel coverage).

Transverse to face of sign: 20% of normal force.

WALKWAY LOADING:

Dead load +500 LB concentrated live load.

UNIT STRESSES:

Structural steel:	fy = 36,000 psi
Reinforced concrete:	fy = 60,000 psi
	f'c = 3600 psi

MINIMUM CLEARANCE

Vertical roadway clearance 18'-3".

WELDING:

All welding continuous unless otherwise noted on the plans. All welding to be done in accordance with the Standard Specifications.

LEGEND

- — - - — Indicates Existing Structure
- ——— Indicates New Structure
- (1) Exist Conc barrier to remain
- (2) Concrete barrier, Type 60
- (3) Concrete barrier, Type 60E (Mod)
- ▨ Incicates removal of Exist paver facing and cellular concrete (Portion)

NOTES:

1. The roadway clearance shown is measured from roadway surface to the underside of truss bottom chord members. The Contractor shall ensure that a minimum clearance of 18'-3" is maintained from the underside of any equipment to the finished roadway surface.
2. CMS panels are required only on gantry B.
3. For location of CIDH piles, see "Sign Plan and Details" sheet S-1.

DIST	COUNTY	ROUTE	POST MILES TOTAL PROJECT	SHEET NO	TOTAL SHEETS
04	Ala	80	1.8/2.1	16	47

REGISTERED CIVIL ENGINEER 08/30/10 DATE

PLANS APPROVAL DATE

REGISTERED PROFESSIONAL ENGINEER GUOPING XU No. C 63977 Exp. 09/30/10 CIVIL STATE OF CALIFORNIA

The State of California or its officers or agents shall not be responsible for the accuracy or completeness of electronic copies of this plan sheet.

BAY AREA TOLL AUTHORITY
101 EIGHTH STREET
OAKLAND, CALIFORNIA 94607

MGE ENGINEERING, INC.
7415 GREENHAVEN DRIVE, SUITE 100
SACRAMENTO, CALIFORNIA 95831

INDEX TO PLAN SHEETS

Sheet No.	Title
1	Sign Plan and Details
2	General Plan
3	Foundation Details No. 1
4	Foundation Details No. 2
5	Base Plate and Anchorage Details
6	Typical Canopy CMS Installation

AS BUILT
(NO CORRECTIONS ON THIS SHEET)
CONTRACT No. 06420K, BATA-000
C.C.A. DATE 6.18.2010
R.E. NAME BRUCE J. SHEWCHUK

S-2

DESIGN OVERSIGHT	DESIGN	BY G. Xu	CHECKED M. Salmon	WORKING STRESS DESIGN
	DETAILS	BY X. Sun	CHECKED G. Xu	LAYOUT BY G. Xu CHECKED
SIGN OFF DATE	QUANTITIES	BY R. Huang	CHECKED G. Xu	SPECIFICATIONS BY PLANS AND SPECS COMPARED

DESIGN GENERAL PLAN SHEET (ENGLISH) (REV. 2/25/05)

ORIGINAL SCALE IN INCHES FOR REDUCED PLANS 0 1 2 3

PREPARED FOR THE STATE OF CALIFORNIA DEPARTMENT OF TRANSPORTATION

Guoping Xu
PROJECT ENGINEER

CU
EA 06420K

BRIDGE NO.
POST MILE

SFOBB ORT GANTRY
GENERAL PLAN

DISREGARD PRINTS BEARING EARLIER REVISION DATES 06/30/09 07/31/09

REVISION DATES (PRELIMINARY STAGE ONLY)

SHEET 2 OF 6

FILE => c:\cad_files\dgn\2010\sfobb ort final gantry cadd files\SFOBB Roadway S-2.dgn

USERNAME => Peter DATE PLOTTED => 8/30/2010 TIME PLOTTED => 11:01:22 AM

DIST	COUNTY	ROUTE	POST MILES TOTAL PROJECT	SHEET No	TOTAL SHEETS
04	Ala	80	1.8/2.1	17	47

REGISTERED CIVIL ENGINEER 08/30/10 DATE

PLANS APPROVAL DATE

REGISTERED PROFESSIONAL ENGINEER GUOPING XU No. C 63977 Exp. 09/30/10 CIVIL STATE OF CALIFORNIA

The State of California or its officers or agents shall not be responsible for the accuracy or completeness of electronic copies of this plan sheet.

BAY AREA TOLL AUTHORITY
101 EIGHTH STREET
OAKLAND, CALIFORNIA 94607

MGE ENGINEERING, INC.
7415 GREENHAVEN DRIVE, SUITE 100
SACRAMENTO, CALIFORNIA 95831

FG/OG Elevation Table

Location	Elev 1	Elev 2
@ Gantry A	13.20±	8.92±
@ Gantry B	12.30±	8.99±

Pile Data Table

Location	Pile Type	Nominal Resistance (kips)		Steel Casing Specified Tip Elevation (ft)	Design Tip * Elevation (ft)	Specified Tip Elevation (ft)
		Compression	Tension			
Gantry A	60" CIDH	70	0	-70.0	-85.0 (1) -70.0 (2)	-85.0
Gantry B	60" CIDH	70	0	-70.0	-85.0 (1) -70.0 (2)	-85.0

Note:
Design tip elevation is controlled by the following demands:
(1) Compression, and (2) Lateral

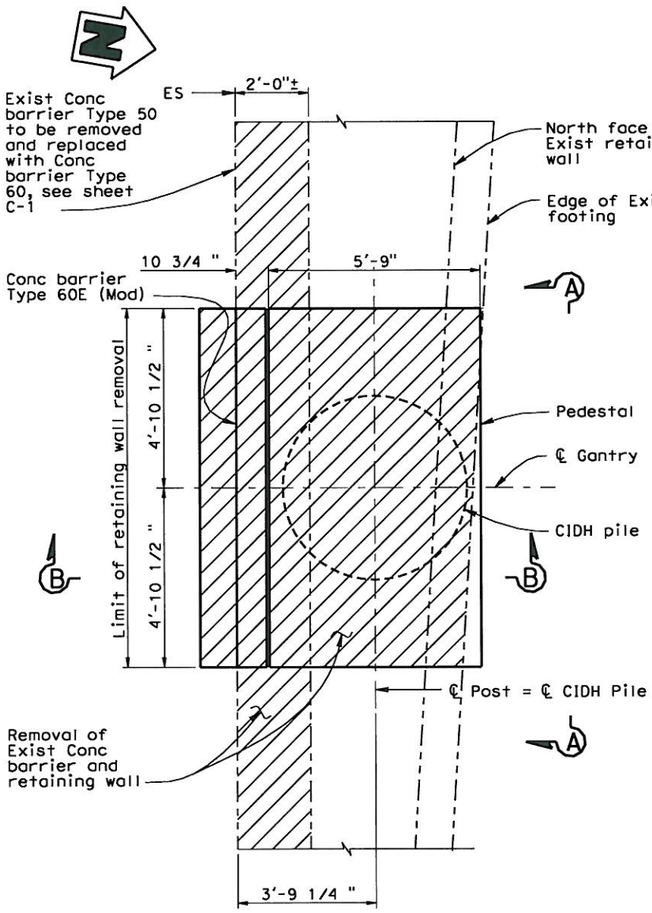

PLAN

SCALE: 1/2" = 1'-0"

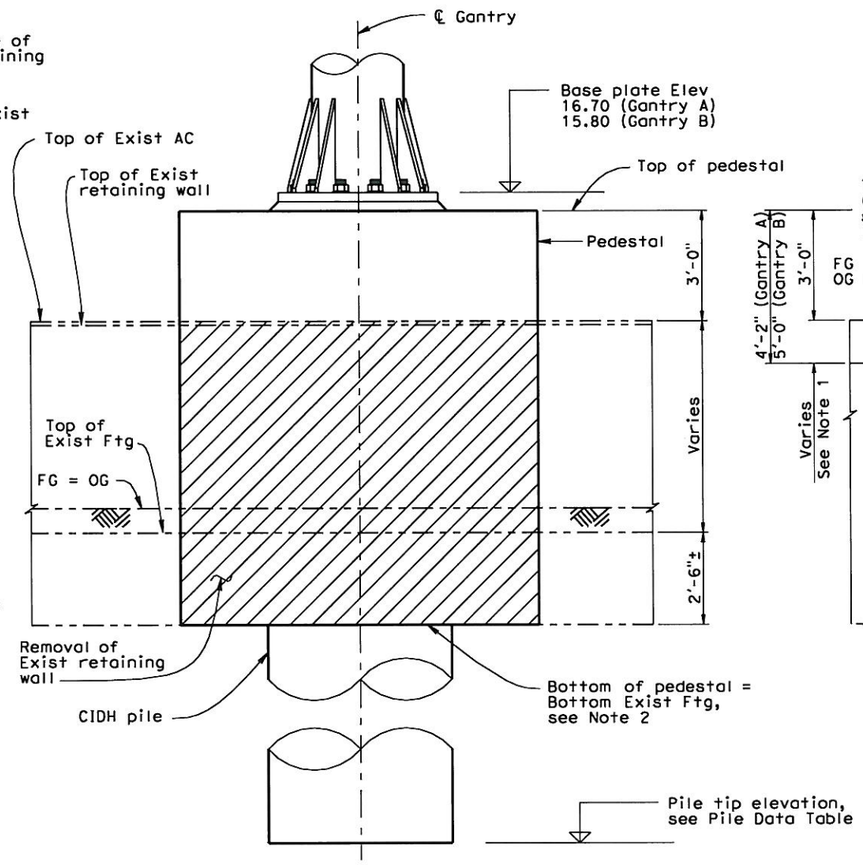

SECTION A-A

SCALE: 1/2" = 1'-0"

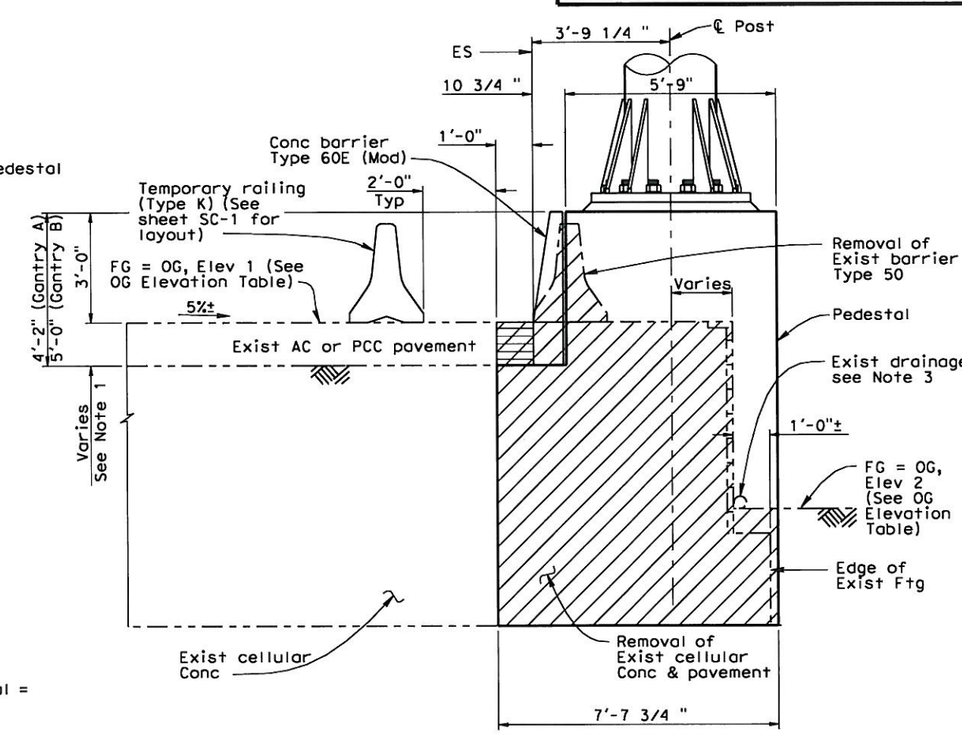

SECTION B-B

SCALE: 1/2" = 1'-0"

AS BUILT
(NO CORRECTIONS ON THIS SHEET)
CONTRACT No. 06420K, BATA-006
C.C.A. DATE 6.18.2010
R.E. NAME BRUCE J. SHEWCHUK

LEGEND

- Indicates Existing Structure
- Indicates New Structure
- Indicates Removal Retaining Wall & Barrier
- Indicates AC/AB or PCC backfill to match Exist pavement

NOTES:

1. Exist 14"± PCC at Gantry A and Exist 5"± AC over 19" AB at Gantry B.
2. Bottom of Exist Ftg elevation to be established during construction.
3. For drainage relocation, see Drainage sheet D-1.
4. For utility relocation, see U-sheets.

Note:
The Contractor shall verify all controlling field dimensions before ordering or fabricating any material.

S-3

DESIGN OVERSIGHT	DESIGN	BY G. Xu	CHECKED M. Salmon
SIGN OFF DATE	DETAILS	BY X. Sun	CHECKED G. Xu
	QUANTITIES	BY R. Huang	CHECKED G. Xu

DESIGN DETAIL SHEET (ENGLISH) (REV. 2/25/05)

ORIGINAL SCALE IN INCHES FOR REDUCED PLANS 0 1 2 3

PREPARED FOR THE STATE OF CALIFORNIA DEPARTMENT OF TRANSPORTATION

Guoping Xu
PROJECT ENGINEER

CU
EA 06420K

BRIDGE NO.
POST MILE

SFOBB ORT GANTRY
FOUNDATION DETAILS NO. 1

DISREGARD PRINTS BEARING EARLIER REVISION DATES

REVISION DATES (PRELIMINARY STAGE ONLY) 05/08/09 07/31/09

SHEET 3 OF 6

FILE => c:\cad_files\dgn\2010\sfobb ort final gantry cadd files\SFOBB Roadway S-3.dgn

USERNAME => Peter DATE PLOTTED => 8/30/2010 TIME PLOTTED => 11:01:23 AM

DIST	COUNTY	ROUTE	POST MILES TOTAL PROJECT	SHEET No	TOTAL SHEETS
04	Ala	80	1.8/2.1	18	47

REGISTERED CIVIL ENGINEER 08/30/10 DATE

PLANS APPROVAL DATE

The State of California or its officers or agents shall not be responsible for the accuracy or completeness of electronic copies of this plan sheet.

REGISTERED PROFESSIONAL ENGINEER GUOPING XU No. C 63977 Exp. 09/30/10 CIVIL STATE OF CALIFORNIA

BAY AREA TOLL AUTHORITY
101 EIGHTH STREET
OAKLAND, CALIFORNIA 94607

MGE ENGINEERING, INC.
7415 GREENHAVEN DRIVE, SUITE 100
SACRAMENTO, CALIFORNIA 95831

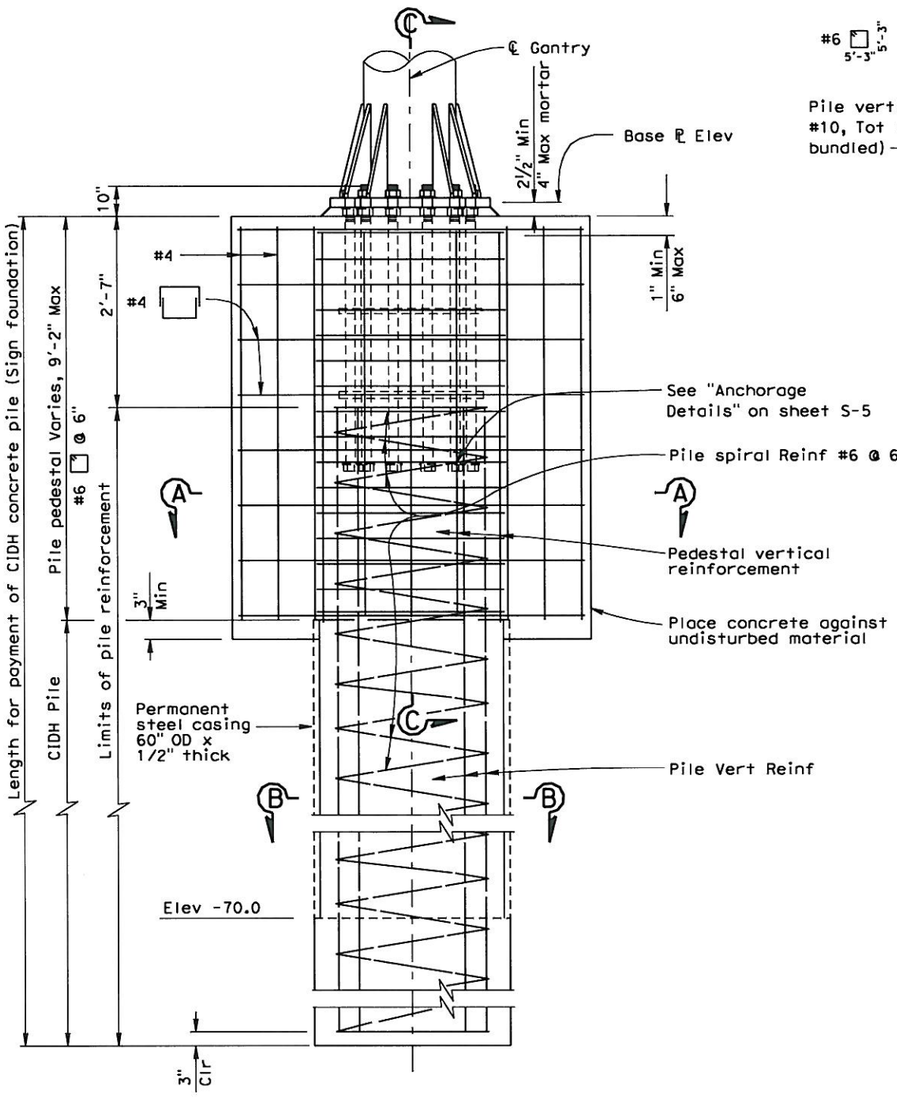

PEDESTAL AND CIDH PILE REINFORCEMENT DETAILS

SCALE: 1/2" = 1'-0"

Note:
The Contractor shall verify all controlling field dimensions before ordering or fabricating any material.

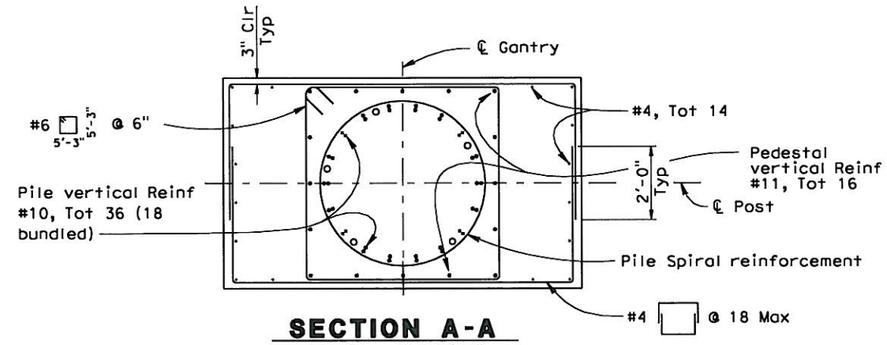

SECTION A-A

SCALE: 1/2" = 1'-0"

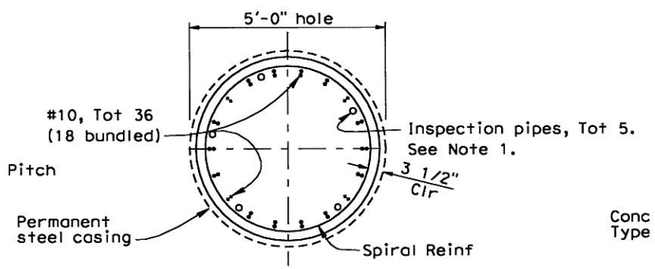

SECTION B-B

SCALE: 1/2" = 1'-0"

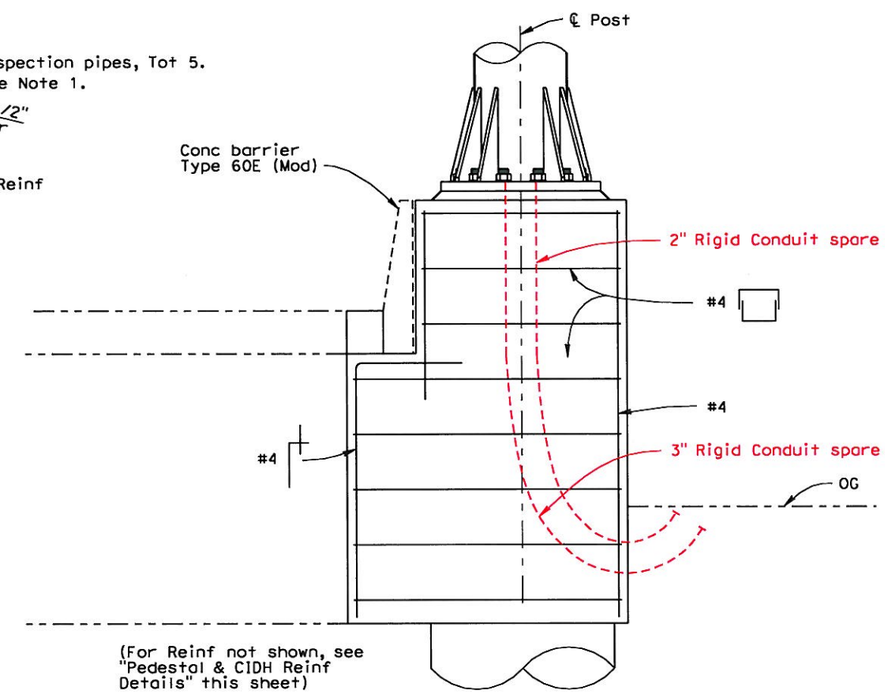

SECTION C-C

SCALE: 1/2" = 1'-0"

NOTE:

1. Vertical inspection pipes for acceptance testing shall be provided in all cast-in-drilled-hole concrete piles, except when the holes are dry or when the holes are dewatered without the use of temporary casing to control ground water.

AS BUILT
CONTRACT No. 06420K, BATA-006
C.C.A. DATE 6.18.2010
R.E. NAME BRUCE J. SHEWCHUK

S-4

DESIGN	BY G. Xu	CHECKED M. Salmon	
DETAILS	BY X. Sun	CHECKED G. Xu	
QUANTITIES	BY R. Huang	CHECKED G. Xu	

DESIGN OVERSIGHT

SIGN OFF DATE

DESIGN DETAIL SHEET (ENGLISH) (REV. 2/25/05)

ORIGINAL SCALE IN INCHES FOR REDUCED PLANS 0 1 2 3

PREPARED FOR THE STATE OF CALIFORNIA DEPARTMENT OF TRANSPORTATION

Guoping Xu
PROJECT ENGINEER

BRIDGE NO.
POST MILE

SFOBB ORT GANTRY
FOUNDATION DETAILS NO. 2

CU
EA 06420K

DISREGARD PRINTS BEARING EARLIER REVISION DATES 06/08/09 07/31/09

REVISION DATES (PRELIMINARY STAGE ONLY)

SHEET 4 OF 6

FILE => c:\cad_files\dgn\2010\sfobb ort final gantry cadd files\SFOBB Roadway S-4.dgn

USERNAME => Peter DATE PLOTTED => 8/30/2010 TIME PLOTTED => 11:01:25 AM

DIST	COUNTY	ROUTE	POST MILES TOTAL PROJECT	SHEET No	TOTAL SHEETS
04	Ala	80	1.8/2.1	19	47

REGISTERED CIVIL ENGINEER 08/30/10 DATE

PLANS APPROVAL DATE

REGISTERED PROFESSIONAL ENGINEER GUOPING XU No. C 63977 Exp. 09/30/10 CIVIL STATE OF CALIFORNIA

The State of California or its officers or agents shall not be responsible for the accuracy or completeness of electronic copies of this plan sheet.

BAY AREA TOLL AUTHORITY
101 EIGHTH STREET
OAKLAND, CALIFORNIA 94607

MGE ENGINEERING, INC.
7415 GREENHAVEN DRIVE, SUITE 100
SACRAMENTO, CALIFORNIA 95831

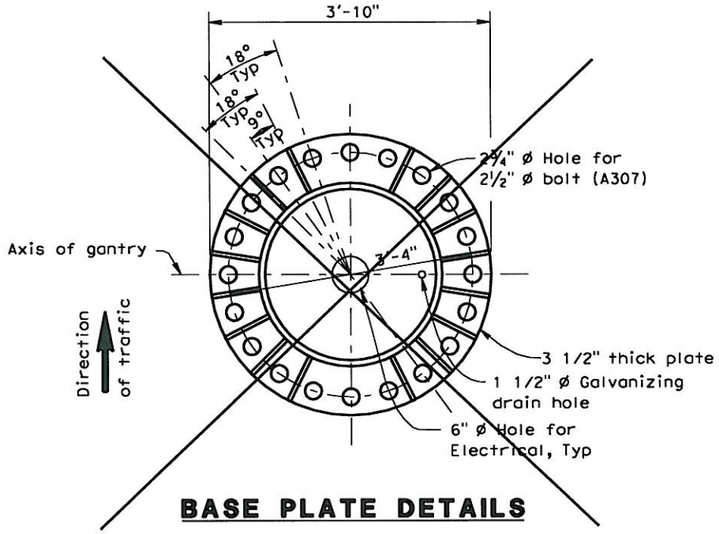

BASE PLATE DETAILS

(NOT IN CONTRACT)

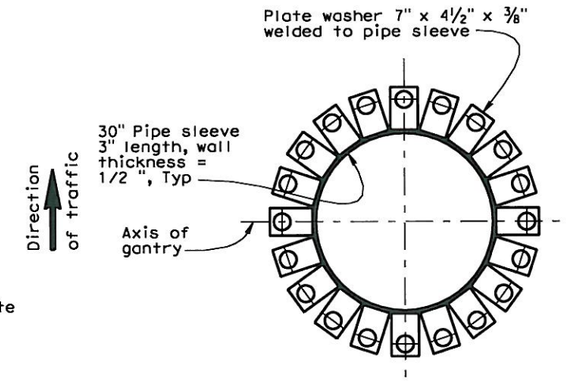

ANCHOR BOLT TEMPLATE

Template to match base plate anchor bolt pattern.

(Option: Template similar to ring plate type can be used in lieu of plate washer type).

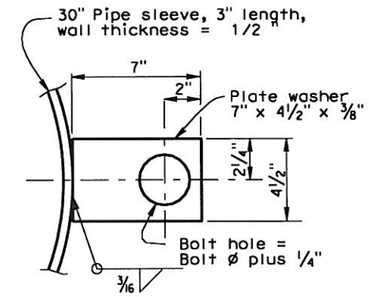

PLATE WASHER DETAIL

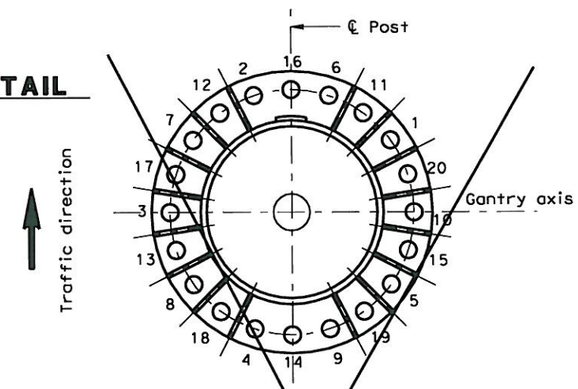

TIGHTENING SEQUENCE

NOTES:

1. Thread upper 10" and galvanize upper 1'-0" of the anchor bolts.
2. Provide anchor bolt templates during installation of anchor bolts. Templates to match base plate anchor bolts pattern.
3. Following initial tightening, upper nuts shall be brought to a snug tight condition. This can be obtained by a few impacts of an impact wrench or the full effort of a man using an ordinary spud wrench. Snug tightening shall progress systematically according to the tightening sequence as shown. Upper nuts and washers to have full even bearing on base plate.
4. 2 1/2 " ø Anchor bolts with nut, leveling nut, 2 flat washers, and plate washer per bolt. Leveling nuts and washers to be adjusted for full even bearing on base plate prior to final tightening of upper nuts. (See Note 3).

(NOT IN CONTRACT)

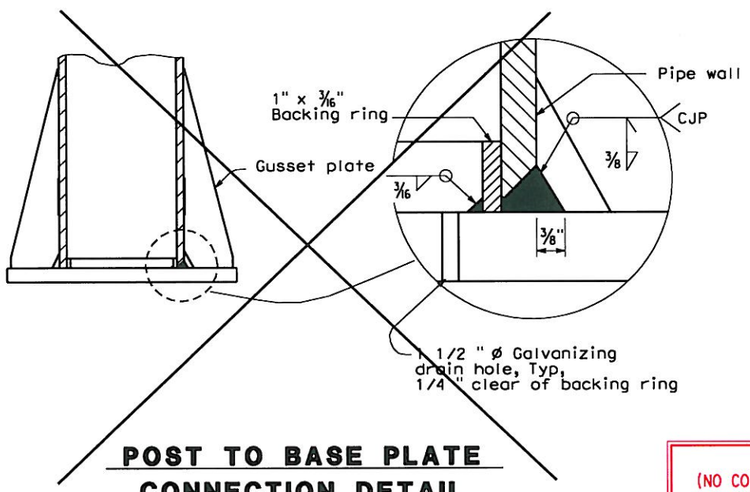

POST TO BASE PLATE CONNECTION DETAIL

(NOT IN CONTRACT)

Note:
The Contractor shall verify all controlling field dimensions before ordering or fabricating any material.

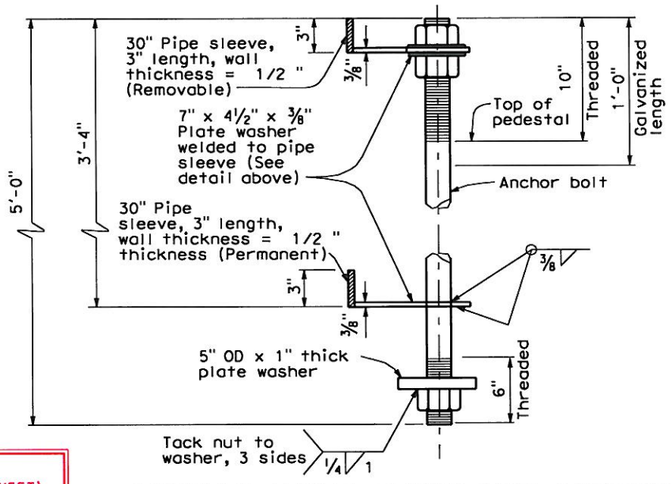

ANCHOR BOLT TEMPLATE ASSEMBLY

NOTE: One bolt shown only. Other bolts same configuration around pipe sleeve.

AS BUILT
(NO CORRECTIONS ON THIS SHEET)
CONTRACT No. 0G420K BATA-006
C.C.A. DATE 6.18.2010
R.E. NAME BRUCE J. SHEWCHUK

S-5

DESIGN OVERSIGHT	DESIGN	BY G. Xu	CHECKED M. Salmon
SIGN OFF DATE	DETAILS	BY X. Sun	CHECKED G. Xu
	QUANTITIES	BY R. Huang	CHECKED G. Xu

PREPARED FOR THE STATE OF CALIFORNIA DEPARTMENT OF TRANSPORTATION

Guoping Xu
PROJECT ENGINEER

BRIDGE NO.
POST MILE

SFOBB ORT GANTRY
BASE PLATE AND ANCHORAGE DETAILS

DESIGN DETAIL SHEET (ENGLISH) (REV. 2/25/05)

ORIGINAL SCALE IN INCHES FOR REDUCED PLANS 0 1 2 3

CU 04
EA 0G420K

DISREGARD PRINTS BEARING EARLIER REVISION DATES 06/08/09 01/31/09

REVISION DATES (PRELIMINARY STAGE ONLY)

SHEET 5 OF 6

FILE => c:\cad_files\dgn\2010\sfobb ort final gantry cadd files\SFOBB Roadway S-5.dgn

USERNAME => Peter DATE PLOTTED => 8/30/2010 TIME PLOTTED => 11:01:26 AM

DIST	COUNTY	ROUTE	POST MILES TOTAL PROJECT	SHEET No	TOTAL SHEETS
04	Ala	80	1.8/2.1	20	47

REGISTERED CIVIL ENGINEER 08/30/10 DATE

PLANS APPROVAL DATE

REGISTERED PROFESSIONAL ENGINEER GUOPING XU No. C 63977 Exp. 09/30/10 CIVIL STATE OF CALIFORNIA

The State of California or its officers or agents shall not be responsible for the accuracy or completeness of electronic copies of this plan sheet.

BAY AREA TOLL AUTHORITY
101 EIGHTH STREET
OAKLAND, CALIFORNIA 94607

MGE ENGINEERING, INC.
7415 GREENHAVEN DRIVE, SUITE 100
SACRAMENTO, CALIFORNIA 95831

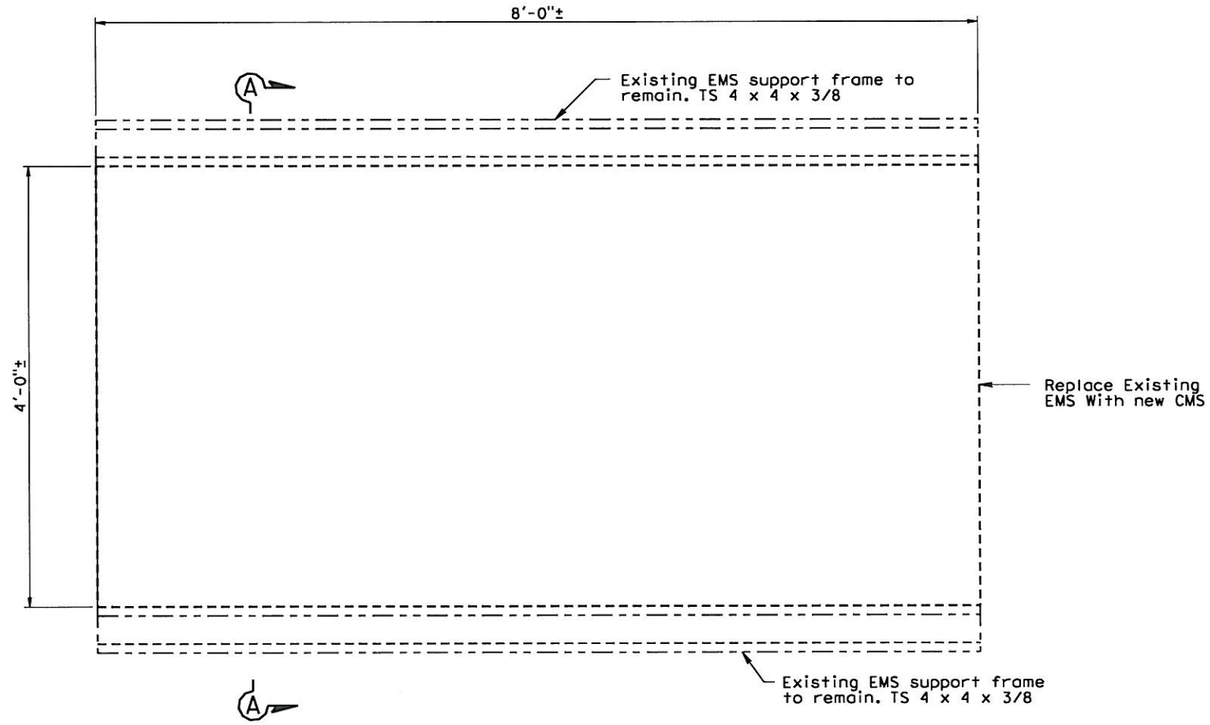

CMS SUPPORT ELEVATION

SCALE: 1 1/2" = 1'-0"

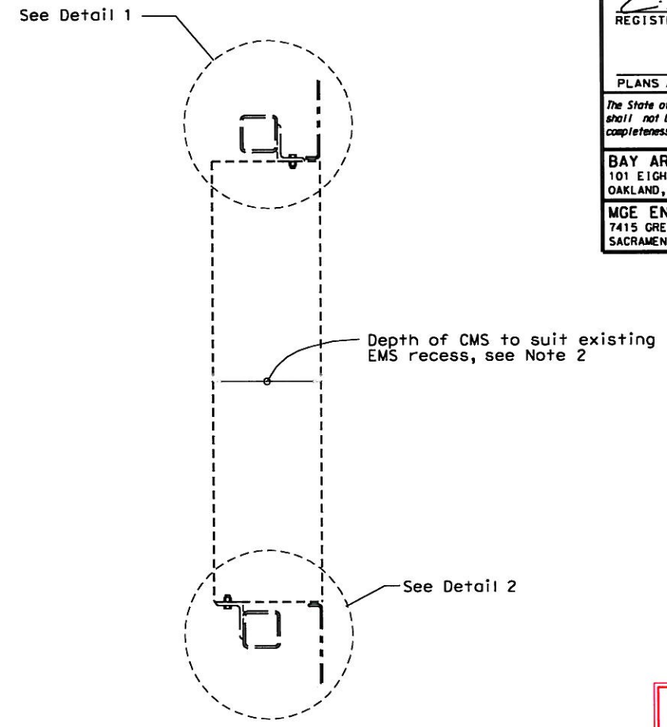

SECTION A-A

SCALE: 1 1/2" = 1'-0"

AS BUILT
(NO CORRECTIONS ON THIS SHEET)
CONTRACT No. 0G420K, BATA-006
C.C.A. DATE 6.18.2010
R.E. NAME BRUCE J. SHEWCHUK

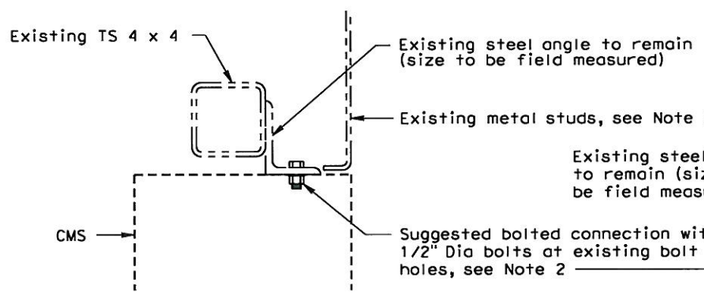

DETAIL 1

SCALE: 3" = 1'-0"

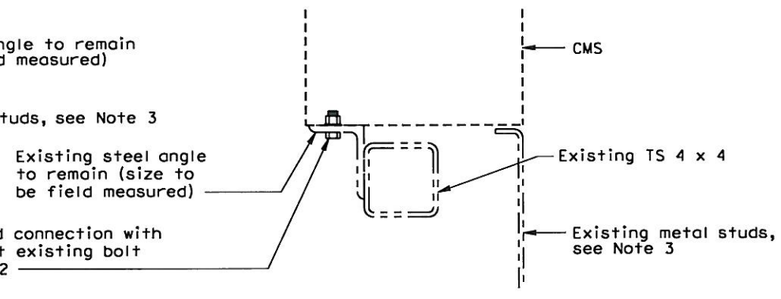

DETAIL 2

SCALE: 3" = 1'-0"

NOTES:

1. For location and number of CMS panels, see sheet E-15.
2. CMS manufacturer shall verify dimensions of existing EMS recess and support frames, and submit shop drawings of connection details for review.
3. Existing metal studs to be removed locally for access and reinstated after installation of CMS.

Note:
The Contractor shall verify all controlling field dimensions before ordering or fabricating any material.

S-6

DESIGN	BY G. Xu	CHECKED M. Salmon	
DETAILS	BY X. Sun	CHECKED G. Xu	
QUANTITIES	BY R. Huang	CHECKED G. Xu	

DESIGN OVERSIGHT

SIGN OFF DATE

DESIGN DETAIL SHEET (ENGLISH) (REV. 2/25/05)

ORIGINAL SCALE IN INCHES FOR REDUCED PLANS 0 1 2 3

PREPARED FOR THE STATE OF CALIFORNIA DEPARTMENT OF TRANSPORTATION

Guoping Xu
PROJECT ENGINEER

BRIDGE NO.

POST MILE

CU
EA 0G420K

DISREGARD PRINTS BEARING EARLIER REVISION DATES 06/26/09

REVISION DATES (PRELIMINARY STAGE ONLY)

SHEET 6 OF 6

SFOBB TOLL PLAZA
TYPICAL CANOPY CMS INSTALLATION

FILE => c:\cad_files\dgn\2010\sfobb art final gantry cadd files\SFOBB Gantry CMS S-6.dgn

USERNAME => Peter DATE PLOTTED => 8/30/2010 TIME PLOTTED => 11:01:20 AM

Dist	COUNTY	ROUTE	POST MILES TOTAL PROJECT	SHEET No.	TOTAL SHEETS
04	Ala	80	1.8/2.1	21	47

David Williams 6/10/09
REGISTERED CIVIL ENGINEER DATE

PLANS APPROVAL DATE

REGISTERED PROFESSIONAL ENGINEER David Andrew Williams No. C58697 Exp. 12/31/10 CIVIL STATE OF CALIFORNIA

THE STATE OF CALIFORNIA OR ITS OFFICERS OR AGENTS SHALL NOT BE RESPONSIBLE FOR THE ACCURACY OR COMPLETENESS OF SCANNED COPIES OF THIS PLAN SHEET.

BAY AREA TOLL AUTHORITY
101 EIGHTH STREET
OAKLAND, CA 94607

URS CORPORATION
55 SOUTH MARKET STREET
SUITE 1500
SAN JOSE, CA 95113-2332

DELINEATOR CURB AND CONCRETE BARRIER QUANTITIES

LOCATION	Temp RAILING (TYPE K)	SALVAGE DELINEATOR CURB	REMOVE CONCRETE BARRIER	DELINEATOR CURB	CONCRETE BARRIER (TYPE K) Mod	CONCRETE BARRIER (TYPE 60)	CONCRETE BARRIER (TYPE 60E) Mod
	LF	LF	LF	LF	LF	LF	LF
45.04' Lt "A" 19+40.62 TO 55.71' Lt "A" 20+95.92	160						
0.00' Lt "A" 10+00.59 TO 3.70' Lt "A" 14+86.17		487					
0.00' Lt "A" 10+00.00 TO 0.00' Lt "A" 14+75.80				476			
30.50' Lt "A" 10+02.60 TO 54.89' Lt "A" 14+76.02				475			
0.00' Lt "A" 14+75.80 TO 0.53' Lt "A" 19+16.50					440		
49.99' Lt "A" 19+52.37 TO 55.56' Lt "A" 20+93.64			146				
49.99' Lt "A" 19+52.37 TO 49.99' Lt "A" 19+57.25						5	
49.99' Lt "A" 19+56.18 TO 50.03' Lt "A" 19+65.66							10
50.01' Lt "A" 19+63.72 TO 50.74' Lt "A" 20+05.80						42	
50.68' Lt "A" 20+03.86 TO 50.98' Lt "A" 20+13.34							10
50.91' Lt "A" 20+11.39 TO 55.71' Lt "A" 20+95.92						84	
TOTAL	160	487	146	951	440	131	20

DEMOLITION REPLACEMENT PAVEMENT SECTION QUANTITIES

LOCATION	COLD PLANE AC PAVEMENT (0.25' Max)	IMPORTED BORROW (LWA)	SUBGRADE ENHANCEMENT GEOTEXTILE	CLASS 2 AGGREGATE BASE	HOT MIX ASPHALT
	SQYD	CY	SQYD	CY	TON
MINI TOLL PLAZA AND Ped WALKWAY DEMOLITION AREA	120	670	880	150	830
TOTAL	120	670	880	150	830

PRE-HUNG CHAIN LINK SWING GATE QUANTITIES

LOCATION	EA
Ped TUNNEL STAIRCASE TO Ped WALKWAY	1
TOTAL	1

ABANDON CULVERT QUANTITIES

LOCATION	LF
43.59' Lt "A" 19+50.24 TO 55.71' Lt "A" 19+62.24	18
TOTAL	18

SIGN STRUCTURE AND FOUNDATION QUANTITIES

SIGN No.	LOCATION	60" CIDH PILE FOUNDATION	INSTALL GANTRY STRUCTURE (TRUSS)
		LF	LB
A	52.88' Lt "A" 19+60.91	96	31400
B	53.70' Lt "A" 20+08.51	96	33600
TOTAL		192	65000

REMOVE PAVEMENT DELINEATION QUANTITIES

LOCATION	DETAIL No.	REMOVE THERMOPLASTIC TRAFFIC STRIPE		REMOVE PAVEMENT MARKER	REMOVE THERMOPLASTIC PAVEMENT MARKINGS
		YELLOW	WHITE	EA	SQFT
		LF	LF		
3.80' Rt "A" 15+26.09 TO 0.91' Lt "A" 19+16.68	25A	393		16	
METERING LIGHTS TO 36.33' Rt "A" 19+26.61	38		924	39	
17.83' Rt "A" 17+33.99 TO 21.90' Rt "A" 19+44.82	38		206	9	
11.55' Rt "A" 15+36.55 TO 6.13' Rt "A" 19+27.54	38		392	16	
8.87' Rt "A" 16+57.25 TO 2.03' Rt "A" 18+15.30	12" CHEVRONS		46	0	
13.67' Lt "A" 13+81.56 TO 17.95' Lt "A" 14+66.72	38		86	4	
11.96' Lt "A" 14+77.29 TO 14.37' Lt "A" 16+52.08	38		174	7	
17.65' Lt "A" 14+77.43 TO 14.37' Lt "A" 16+52.08	38		173	7	
METERING LIGHTS TO 35.20' Lt "A" 14+64.84	38		466	19	
30.06' Lt "A" 14+77.73 TO 29.08' Lt "A" 16+40.05	38		159	7	
37.41' Lt "A" 14+77.91 TO 29.08' Lt "A" 16+40.05	38		159	7	
29.08' Lt "A" 16+40.05 TO 21.41' Lt "A" 17+09.06	9		69	1	
METERING LIGHTS TO 53.11' Lt "A" 14+74.97	9		476	10	
METERING LIGHTS TO 53.00' Lt "A" 14+61.49	12" CHEVRONS		535	0	
49.29' Lt "A" 15+74.59	-				13
61.98' Lt "A" 15+75.22	-				13
22.29' Lt "A" 20+24.53	-				13
33.37' Lt "A" 20+24.74	-				13
35.41' Lt "A" 22+86.63	-				13
24.25' Lt "A" 22+85.90	-				13
7.00' Lt "A" 20+35.61	-				67
TOTAL		393	3865	142	145

AS BUILT
(NO CORRECTIONS ON THIS SHEET)
CONTRACT No. 0G420K ROUTE 80
C.C.A. DATE 6.18.2010
R.E. NAME BRUCE J. SHEWCHUK

QUANTITIES

Q-1

STATE OF CALIFORNIA - DEPARTMENT OF TRANSPORTATION
Caltrans
CONSULTANT FUNCTIONAL SUPERVISOR: LARRY JONES
CALCULATED-DESIGNED BY
CHECKED BY
REVISED BY
DATE REVISED

LAST REVISION 00-00-00
DATE PLOTTED => 8/24/2010
TIME PLOTTED => 11:13:26 AM

Dist	COUNTY	ROUTE	POST MILES TOTAL PROJECT	SHEET No.	TOTAL SHEETS
04	Ala	80	1.8/2.1	22	47

David Williams 6/10/09
REGISTERED CIVIL ENGINEER DATE

PLANS APPROVAL DATE

REGISTERED PROFESSIONAL ENGINEER David Andrew Williams No. C58697 Exp. 12/31/10 CIVIL STATE OF CALIFORNIA

THE STATE OF CALIFORNIA OR ITS OFFICERS OR AGENTS SHALL NOT BE RESPONSIBLE FOR THE ACCURACY OR COMPLETENESS OF SCANNED COPIES OF THIS PLAN SHEET.

BAY AREA TOLL AUTHORITY
101 EIGHTH STREET
OAKLAND, CA 94607

URS CORPORATION
55 SOUTH MARKET STREET
SUITE 1500
SAN JOSE, CA 95113-2332

NOTES:

1. MINI TOLL PLAZA, PEDESTRIAN WALKWAY, AND ASSOCIATED ELEMENTS SHALL BE REMOVED. SEE PLANS FOR ADDITIONAL DEMOLITION INFORMATION.
2. FOR ADDITIONAL INFORMATION NOT PROVIDED SEE OAKLAND BAY BRIDGE MINI TOLL PLAZA RECORD PLANS AT BATA OFFICE.
3. THE EXISTING REINFORCED CONCRETE FOUNDATIONS SHALL BE REMOVED 4.15 FEET BELOW SURROUNDING SURFACE. ROADWAY EXCAVATION IS TO EXTEND 4.15 FEET BELOW SURROUNDING SURFACE.

LEGEND

LIMITS OF DEMOLITION

LIMITS OF PILE CAP DEMOLITION

LIMITS OF RETAINING WALL DEMOLITION

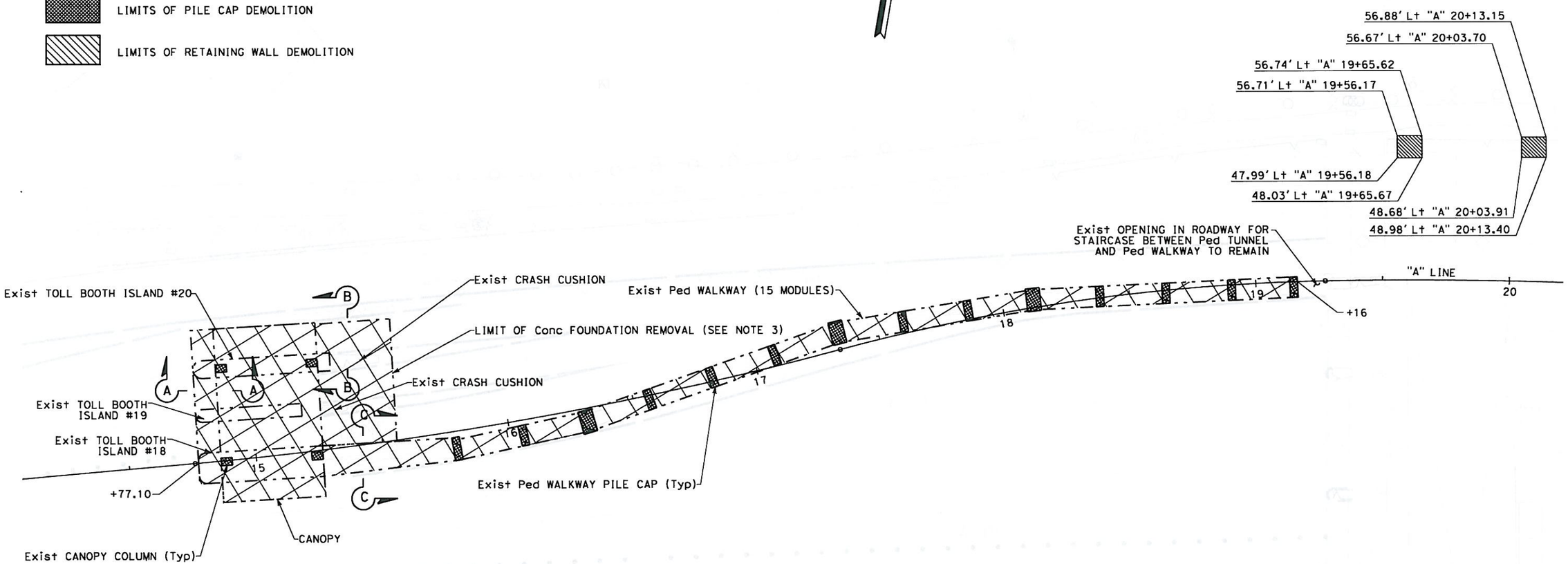

THIS PLAN ACCURATE FOR DEMOLITION WORK ONLY.

AS BUILT
(NO CORRECTIONS ON THIS SHEET)
CONTRACT No. 0G420K BATA
C.C.A. DATE 6.18.2010
R.E. NAME BRUCE J. SHENCHUK

DEMOLITION PLAN

SCALE: 1" = 20'

DM-1

REVISED BY	DATE REVISED

CALCULATED-DESIGNED BY	CHECKED BY

CONSULTANT FUNCTIONAL SUPERVISOR
LARRY JONES

STATE OF CALIFORNIA - DEPARTMENT OF TRANSPORTATION
Caltrans

LAST REVISION 00-00-00
DATE PLOTTED => 8/24/2010
TIME PLOTTED => 11:13:33 AM

Dist	COUNTY	ROUTE	POST MILES TOTAL PROJECT	SHEET No.	TOTAL SHEETS
04	Ala	80	1.8/2.1	23	47

David Williams 6/10/09
REGISTERED CIVIL ENGINEER DATE

PLANS APPROVAL DATE

REGISTERED PROFESSIONAL ENGINEER David Andrew Williams No. C58697 Exp. 12/31/10 CIVIL STATE OF CALIFORNIA

THE STATE OF CALIFORNIA OR ITS OFFICERS OR AGENTS SHALL NOT BE RESPONSIBLE FOR THE ACCURACY OR COMPLETENESS OF SCANNED COPIES OF THIS PLAN SHEET.

BAY AREA TOLL AUTHORITY
101 EIGHTH STREET
OAKLAND, CA 94607

URS CORPORATION
55 SOUTH MARKET STREET
SUITE 1500
SAN JOSE, CA 95113-2332

NOTES:

1. PRIOR TO DEMOLITION CONTRACTOR SHALL COORDINATE THE TERMINATION OF THE EXISTING WATER AND GAS PIPELINES AND POWER AND COMMUNICATION LINES IN THE FLOOR OF THE PEDESTRIAN WALKWAY PER DETAILS SHOWN ON THESE PLANS, THE SPECIFICATIONS AND AS DIRECTED BY THE ENGINEER.
2. EXISTING POWER AND COMMUNICATION LINES FOR THE TOLLING SYSTEM AT THE MINI TOLL PLAZA WILL BE TERMINATED AND REMOVED BY OTHERS PRIOR TO DEMOLITION OF THE MINI TOLL PLAZA AND PEDESTRIAN WALKWAY. CONDUITS AND PANEL BOXES REMAINING AFTER REMOVAL OF THE EXISTING POWER AND COMMUNICATION LINES FOR THE TOLLING SYSTEM WILL BE REMOVED BY THE CONTRACTOR PER THE DETAILS SHOWN ON THESE PLANS, THE SPECIFICATIONS AND AS DIRECTED BY THE ENGINEER.

LEGEND

ROADWAY EXCAVATION

STRUCTURE REMOVAL

ABBREVIATION:

EMT ELECTRIC METALLIC TUBING

PE POLYETHELENE

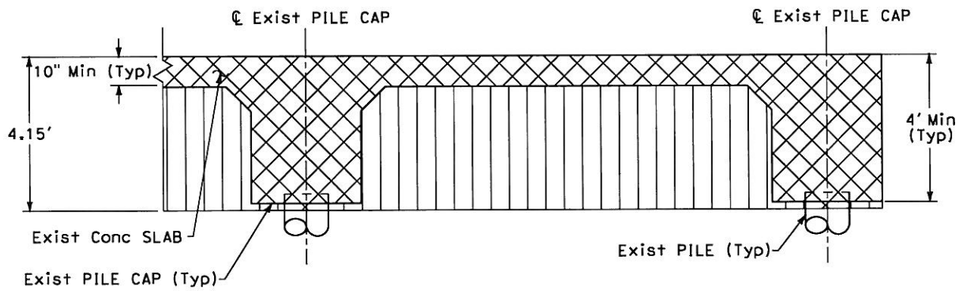

SECTION B-B
SLAB AND PILE CAP TYPICAL SECTION

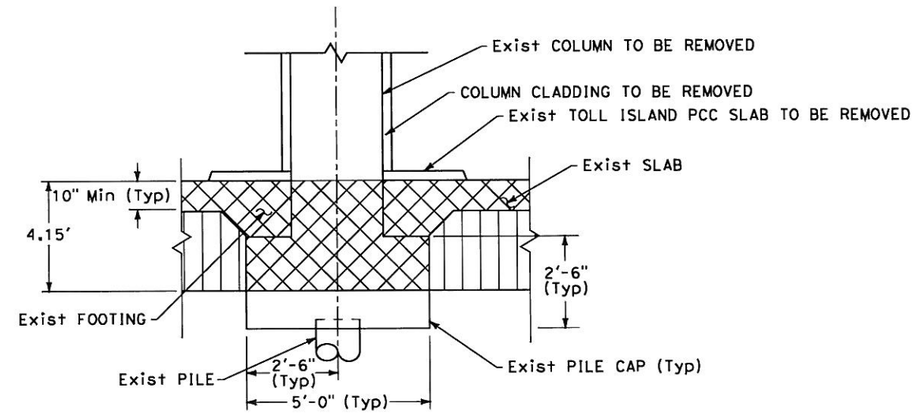

COLUMN DEMOLITION SECTION

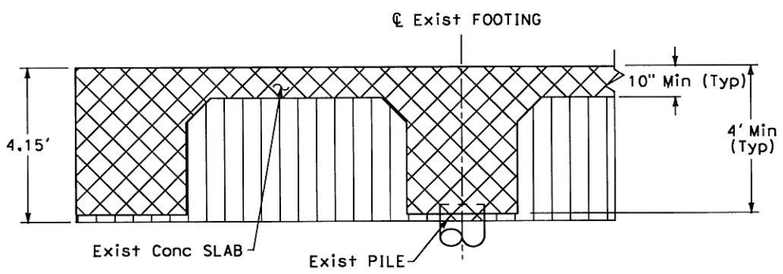

SECTION A-A
TRANSVERSE FOOTING SECTION

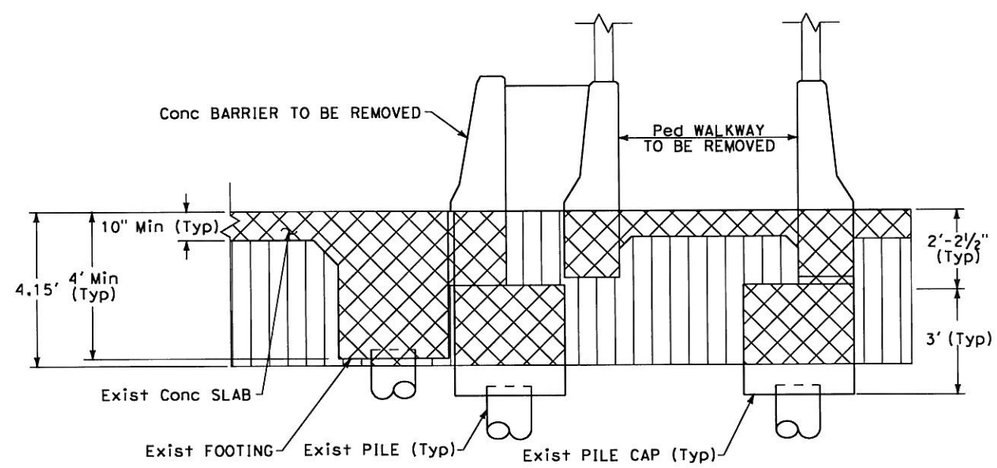

SECTION C-C
BARRIER AND WALKWAY
LONGITUDINAL FOOTING SECTION

AS BUILT
(NO CORRECTIONS ON THIS SHEET)
CONTRACT No. 0G420K BATA-ODK
C.C.A. DATE 6.18.2010
R.E. NAME BRUCE J. SHEWCHUK

DEMOLITION DETAILS

NO SCALE

DMD-1

STATE OF CALIFORNIA - DEPARTMENT OF TRANSPORTATION

CONSULTANT FUNCTIONAL SUPERVISOR: LARRY JONES

CALCULATED-DESIGNED BY | CHECKED BY | REVISED BY | DATE REVISED

LAST REVISION 00-00-00 | DATE PLOTTED => 8/24/2010 | TIME PLOTTED => 11:13:36 AM

BORDER LAST REVISED 4/11/2008 | RELATIVE BORDER SCALE IS IN INCHES 0 1 2 3 | USERNAME => carol_doehne | DGN FILE => SFOBBORT_DMD02.dgn | CU 00000 | EA 0G420K

Dist	COUNTY	ROUTE	POST MILES TOTAL PROJECT	SHEET No.	TOTAL SHEETS
04	Ala	80	1.8/2.1	24	47

David Williams 6/10/09
REGISTERED CIVIL ENGINEER DATE

PLANS APPROVAL DATE

REGISTERED PROFESSIONAL ENGINEER David Andrew Williams No. C58697 Exp. 12/31/10 CIVIL STATE OF CALIFORNIA

THE STATE OF CALIFORNIA OR ITS OFFICERS OR AGENTS SHALL NOT BE RESPONSIBLE FOR THE ACCURACY OR COMPLETENESS OF SCANNED COPIES OF THIS PLAN SHEET.

BAY AREA TOLL AUTHORITY
101 EIGHTH STREET
OAKLAND, CA 94607

URS CORPORATION
55 SOUTH MARKET STREET
SUITE 1500
SAN JOSE, CA 95113-2332

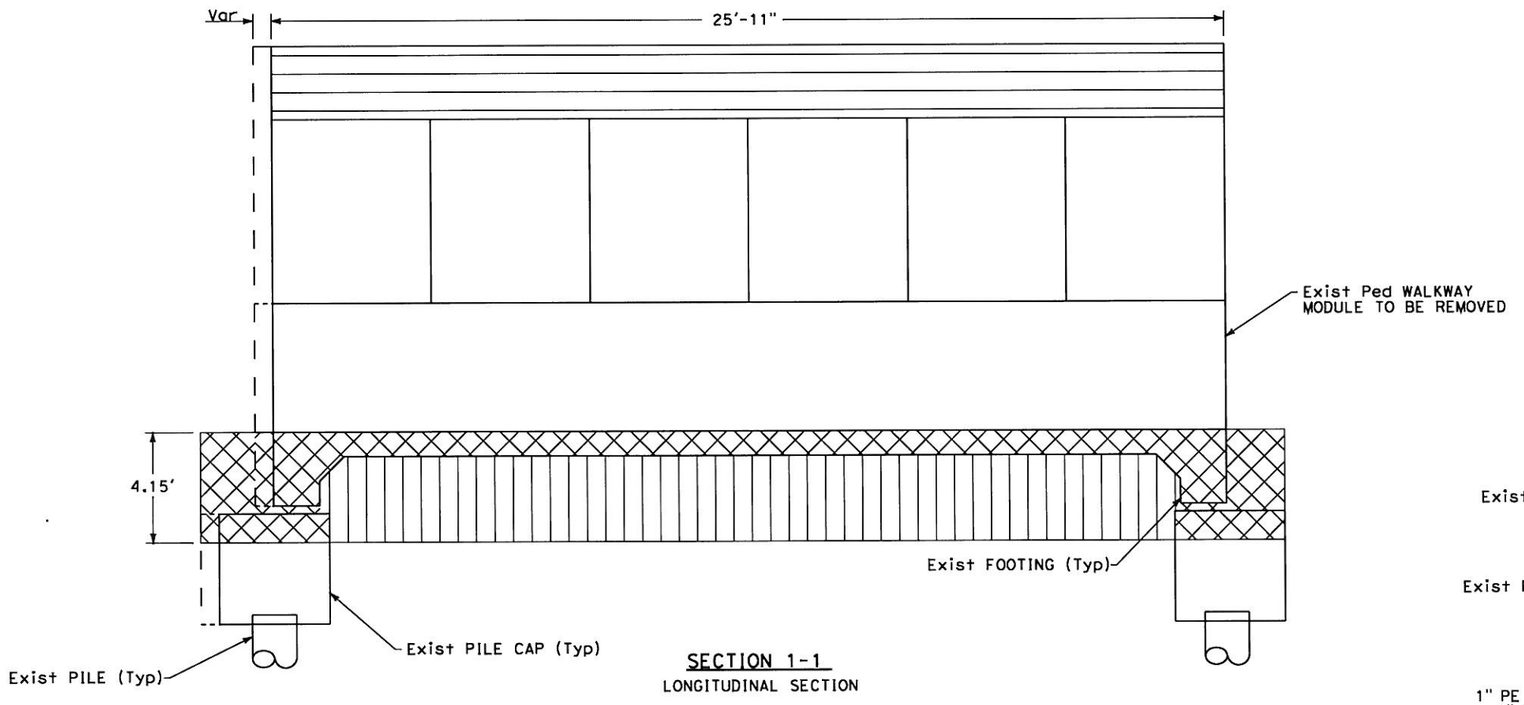

SECTION 1-1
LONGITUDINAL SECTION

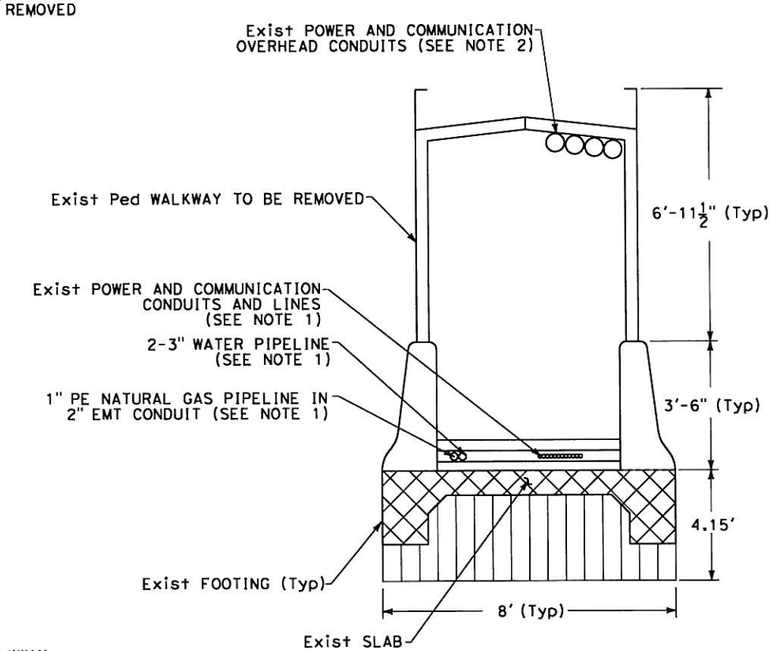

SECTION 2-2
TYPICAL TRANSVERSE SECTION

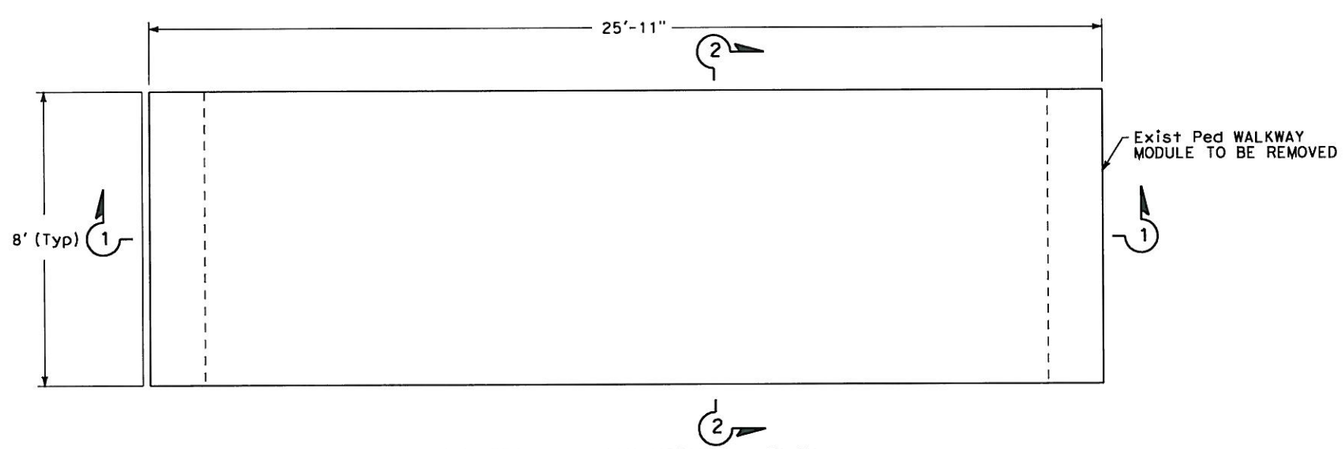

PEDESTRIAN WALKAY MODULE - PLAN

AS BUILT
(NO CORRECTIONS ON THIS SHEET)
CONTRACT No. 0G420K BATA-006
C.C.A. DATE 6.18.2010
R.E. NAME BRUCE J. SHEWCHUK

DEMOLITION DETAILS

NO SCALE

DMD-2

STATE OF CALIFORNIA - DEPARTMENT OF TRANSPORTATION
Caltrans

CONSULTANT FUNCTIONAL SUPERVISOR: LARRY JONES

CALCULATED-DESIGNED BY | CHECKED BY | REVISED BY | DATE REVISED

LAST REVISION 00-00-00 | DATE PLOTTED => 8/24/2010 | TIME PLOTTED => 11:13:38 AM

BORDER LAST REVISED 4/11/2008 | RELATIVE BORDER SCALE IS IN INCHES 0 1 2 3 | USERNAME => carol_doehne | DGN FILE => SFOBBORT_DMD03.dgn | CU 00000 | EA 0G420K

Dist	COUNTY	ROUTE	POST MILES TOTAL PROJECT	SHEET No.	TOTAL SHEETS
04	Ala	80	1.8/2.1	25	

REGISTERED CIVIL ENGINEER — DATE 6/10/09

PLANS APPROVAL DATE

REGISTERED PROFESSIONAL ENGINEER — RAMSEY J. HISSEN — No. C-39608 — Exp. 12/31/09 — CIVIL — STATE OF CALIFORNIA

THE STATE OF CALIFORNIA OR ITS OFFICERS OR AGENTS SHALL NOT BE RESPONSIBLE FOR THE ACCURACY OR COMPLETENESS OF SCANNED COPIES OF THIS PLAN SHEET.

BAY AREA TOLL AUTHORITY
101 EIGHTH STREET
OAKLAND, CA 94607

URS CORPORATION
55 SOUTH MARKET STREET
SUITE 1500
SAN JOSE, CA 95113-2332

GENERAL NOTES:

1. ALL WORK AND MATERIALS SHALL CONFORM TO THE LATEST VERSION OF THE CALTRANS STANDARD PLAN AND SPECIFICATIONS.
2. CALL UNDERGROUND SERVICE ALERT 48 HOURS BEFORE EXCAVATION U.S.A. (800) 277-2600.
3. ALL ELECTRICAL, CMS AND TOLL SYSTEM EQUIPMENT, INFRASTRUCTURE, LANDSCAPING OR BUILDINGS DAMAGED BY THE CONTRACTOR'S OPERATIONS SHALL BE REPAIRED OR REPLACED AT THE CONTRACTOR'S EXPENSE.
4. ALL ELECTRICAL AND ORT EQUIPMENT INCLUDING CONDUITS, JUNCTION AND SPLICE BOXES ARE SHOWN IN APPROXIMATE LOCATIONS ONLY. EXACT LOCATIONS TO BE DETERMINED IN FIELD BY ENGINEER.
5. SERVICE EQUIPMENT, ZEC, AVI AND CMS CABINET ENCLOSURES, CONTROLLER ASSEMBLIES, CMS AND OTHER ELECTRICAL EQUIPMENT ARE SHOWN IN APPROXIMATE LOCATIONS ONLY. EXACT LOCATION SHALL BE DETERMINED TO SUIT FIELD CONDITIONS AS DIRECTED BY THE ENGINEER.
6. ALL EXISTING ELECTRICAL AND COMMUNICATION EQUIPMENT SHOWN ON THE PLANS IS FOR REFERENCE AND SHALL REMAIN IN PLACE UNLESS OTHERWISE NOTED. LOCATIONS ARE APPROXIMATED. ANY DAMAGE TO THE EXISTING ELECTRICAL AND COMMUNICATION EQUIPMENT SHALL BECOME THE RESPONSIBILITY OF THE CONTRACTOR.
7. NEW CIRCUIT BREAKERS TO BE INSTALLED TO EXISTING PANEL BOXES SHALL MATCH THE EXISTING TYPE OR APPROVED BY THE ENGINEER AS REQUIRED.
8. ALL DIMENSIONS INDICATED ARE TO BE VERIFIED IN FIELD PRIOR TO COMMENCING WORK.
9. THE CONTRACTOR SHALL IDENTITY AND VERIFY ALL EXISTING UTILITIES, POWER SOURCES AND POWER CONSUMPTIONS AS REQUIRED OR NEEDED AS SHOWN ON THE PLANS PRIOR TO COMMENCING WORK.
10. SEE STRUCTURAL PLANS FOR EXACT LOCATION OF ORT TOLLING STRUCTURES, FRAMES AND MOUNTING BRACKETS.
11. ALL ABOVE GROUND CONDUIT SHALL BE SUPPORTED AT A MINIMUM OF EVERY 5 FEET.
12. ALL ELECTRICAL ITEMS THAT USE ANCHORS TO ATTACH TO THE CONCRETE STRUCTURES SHALL USE STAINLESS STEEL POWER STUD ANCHORS-THREADED VERSION SIZED PER MANUFACTURER RECOMMENDATION AND EPOXY ANCHOR HOLES USING SEALANT WITH A RATED LIFE OF 25 YEARS OR GREATER.
13. ALL ELECTRICAL WORK SHALL MEET ALL REQUIREMENTS OF THE LATEST EDITIONS OF THE NEC & NATIONAL \ELECTRICAL SAFETY CODE. ALL COMPONENTS SHALL BE PROPERLY GROUNDED AND BONDED PER NEC REQUIREMENTS.
14. CONTRACTOR SHALL USE TYPE 1 CONDUIT IN TUNNEL AND TRENCH, TYPE 2 CONDUIT FOR EXPOSED CONDITIONS AND TYPE 4 FLEXIBLE CONDUIT AS SHOWN ON PLANS.
15. ALL EXTERIOR PULL BOXES AND JUNCTION BOXES SHALL BE NEMA 4X.
16. ALL ELECTRICAL AND EXTERIOR CONNECTIONS SHALL BE WEATHERPROOF.

LEGEND:

- CHANGEABLE MESSAGE SIGN
- EXISTING CONDUIT
- EXISTING CONDUIT WITH NEW CABLE
- NEW CONDUIT
- JUNCTION BOX
- EXISTING JUNCTION BOX
- P — CMS CABINET
- ORT CABINET
- CONDUIT IN
- CONDUIT OUT
- RISER CONDUIT
- S — EXISTING INDICATOR LIGHT SWITCH CONSOLE
- X-Y — LANE X TO LANE Y CABLES
- AB — ABANDONED
- RD — REMOVE AND DISPOSE

INDEX:

E-1	GENERAL NOTES, LEGEND, ABBREVIATIONS AND INDEX OF DRAWINGS
E-2	PROJECT NOTES
E-3	PARTIAL MAIN FLOOR AND LOWER LEVEL CONDUIT ROUTING
E-4	TUNNEL LEVEL CONDUIT ROUTING (SHEET 1 OF 2)
E-5	TUNNEL LEVEL CONDUIT ROUTING (SHEET 2 OF 2)
E-6	LANE LEVEL CONDUIT ROUTING
E-7	RETAINING WALL CONDUIT ROUTING (SECTION A-A)
E-8	GANTRY CONDUIT ROUTING
E-9	TUNNEL TO CANOPY CONDUIT ROUTING (SHEET 1 OF 2)
E-9A	TUNNEL TO CANOPY CONDUIT ROUTING (SHEET 2 OF 2)
E-10	LOOP SPLICE BOX DETAILS
E-11	LOOP SPLICE DETAILS
E-12	LOOP WRAPPING DETAILS
E-13	LANES 1-12 CMS SYSTEM SCHEMATIC
E-14	LANES 1-12 CMS CABINETS ELEVATION VIEW
E-15	LANES 13-17 CMS SYSTEM SCHEMATIC
E-16	LANES 13-17 CMS CABINETS ELEVATION VIEW
E-17	ORT LANE 18, 21 & 22 CMS SYSTEM SCHEMATIC
E-18	ORT LANE 18, 21 & 22 CMS CABINET ELEVATION VIEW
E-19	CMS SYSTEM NETWORK DETAILS
E-20	CMS SYSTEM FIBER ASSIGNMENTS
E-21	JUNCTION BOX DETAILS
E-22	CONDUIT MOUNTING AND ATTACHMENT DETAILS
E-23	PARTIAL ONE LINE DIAGRAM
E-24	TB3 AND MPE1 PANELBOARD SCHEDULES
E-25	TB1 AND TB2 PANELBOARD SCHEDULES
E-26	MPE AND TB4 PANELBOARD SCHEDULES
E-27	INDICATOR LIGHT WIRING DIAGRAM FOR LANES 1-5 AND 13-16
E-28	INDICATOR LIGHT WIRING DIAGRAM FOR LANES 6-12
E-29	INDICATOR LIGHT WIRING DIAGRAM FOR LANE 17
E-30	LANE LEVEL-ISLAND LANE 17/18 CONDUIT ROUTING
E-31	INDICATOR LIGHT SWITCH CONSOLE PANEL
E-32	CONDUIT ROUTING - ONE LINE DIAGRAM & SCHEDULE (LANE LEVEL)
E-33	CONDUIT ROUTING - ONE LINE DIAGRAM & SCHEDULE (PEDESTRIAN TUNNEL LEVEL)

ABBREVIATIONS:

AVI	AUTOMATED VEHICLE IDENTIFICATION
CAB	CABINET
CMS	CHANGEABLE MESSAGE SIGN
COMM	COMMUNICATIONS
ETC	ELECTRONIC TOLL COLLECTION
FDU	FIBER DISTRIBUTION UNIT
FO	FIBER OPTIC
ILB	INDICATOR LIGHT BOOTH
ILC	INDICATOR LIGHT CANOPY
ILP	INDICATOR LIGHT PANEL
J-BOX	JUNCTION BOX
JB	JUNCTION BOX
KVA	KILO-VOLT AMPERE
LCD	LIQUID CRYSTAL DISPLAY
LED	LIGHT EMITTING DIODE
MLO	MAIN LUG ONLY
MPE	MAIN PLAZA ELECTRIC (BACK-UP)
MTPE	MINI TOLL PLAZA ELECTRIC (BACK-UP)
MTP	MAIN TOLL PLAZA ELECTRIC (MAIN)
MTPR	MINI TOLL PLAZA ELECTRIC (MAIN)
NEC	NATIONAL ELECTRICAL CODE
ORT	OPEN ROAD TOLLING
PB	CEILING/WALL MOUNTED PULL BOX
PCC	PORTLAND CEMENT CONCRETE
PNL	PANEL
PVC	POLYVINYL CHLORIDE CONDUIT
RMC	RIGID METAL CONDUIT
SFOBB	SAN FRANSCISCO OAKLAND BAY BRIDGE
SM	SINGLE MODE
TB	TERMINAL BLOCKS
TVSS	TRANSIENT VOLTAGE SURGE SUPPRESSOR
TYPE A CABLE	36 SINGLE MODE FIBER OPTIC CABLE
TYPE D CABLE	12 SINGLE MODE FIBER OPTIC CABLE
TYPE 1 CONDUIT	GALVANIZED RIGID STEEL (GRS)
TYPE 2 CONDUIT	TYPE 1 CONDUIT COATED WITH PVC OR POLYETHYLENE
TYPE 4 CONDUIT	LIQUIDTIGHT FLEXIBLE METAL CONDUIT
UPS	UNINTERRUPTIBLE POWER SUPPLY
ZEC	ZONE EQUIPMENT CABINET

AS BUILT
(NO CORRECTIONS ON THIS SHEET)
CONTRACT No. 0G420K BUSTA-001
C.C.A. DATE 6.18.2010
R.E. NAME BRUCE J. SHEWCHUK

GENERAL NOTES, LEGEND, ABBREVIATION AND INDEX OF DRAWINGS

E-1

THIS PLAN ACCURATE FOR ELECTRICAL WORK ONLY

STATE OF CALIFORNIA - DEPARTMENT OF TRANSPORTATION — Caltrans

CONSULTANT FUNCTIONAL SUPERVISOR: LARRY JONES

CALCULATED-DESIGNED BY | CHECKED BY

REVISED BY | DATE REVISED

LAST REVISION 00-00-00 | DATE PLOTTED => 8/30/2010 | TIME PLOTTED => 8:22:54 AM

Dist	COUNTY	ROUTE	POST MILES TOTAL PROJECT	SHEET No.	TOTAL SHEETS
04	Ala	80	1.8/2.1	26	

REGISTERED CIVIL ENGINEER — DATE 6/10/09

PLANS APPROVAL DATE

REGISTERED PROFESSIONAL ENGINEER — RAMSEY J. HISSEN — No. C-39608 — Exp. 12/31/09 — CIVIL — STATE OF CALIFORNIA

THE STATE OF CALIFORNIA OR ITS OFFICERS OR AGENTS SHALL NOT BE RESPONSIBLE FOR THE ACCURACY OR COMPLETENESS OF SCANNED COPIES OF THIS PLAN SHEET.

BAY AREA TOLL AUTHORITY
101 EIGHTH STREET
OAKLAND, CA 94607

URS CORPORATION
55 SOUTH MARKET STREET
SUITE 1500
SAN JOSE, CA 95113-2332

PROJECT NOTES:

1. INSTALL NEW TYPE D CABLE IN EXISTING CONDUIT (FOR CMS).
2. INSTALL NEW TYPE D CABLE IN NEW 2" TYPE 1 CONDUIT (CMS).
3. INSTALL NEW TYPE 1 (1½" C) CONDUIT WITH 4 #6 & 1 #8G (120/208V PANEL MPE1). PROVIDE CONDUIT SUPPORT. ROUTE CONDUIT ALONG EXISTING CONDUIT.
4. EXISTING TYPE 1 (¾" C) CONDUIT WITH 4 #10 TO EXISTING PANEL "MTPE" TO BE REMOVED & SALVAGED.
5. TO EXISTING PANEL K-K (CKT #10, 70A/3 MAIN)(EMERGENCY GENERATOR POWER).
6. TO EXISTING MAIN SWBD (CKT #2, 175A/3 MAIN)(NORMAL BRANCH POWER).
7. TO EXISTING UPS PANEL (150A/3 MAIN)(UPS POWER).
8. AT EXISTING PANEL MPE, INSTALL ONE 50A-3P CIRCUIT BREAKER IN EXISTING SPACES (FOR NEW PANEL-MPE1 FEEDER). SEE SHEET E-23 FOR DETAILS.
9. INSTALL NEW TYPE 1 (¾" C) CONDUIT WITH 2 #12 & 1 #12G. (120V, 1-PHASE, CMS CABINET). PROVIDE CONDUIT SUPPORT AS REQUIRED.
10. ALL WALL AND FLOOR CONCRETE PENETRATIONS SHALL BE CORE-DRILLED AS DIRECTED AND APPROVED BY CALTRANS SUFFICIENTLY LARGE TO ACCOMMODATE CONDUIT PLUS FLUSH MOUNTED END BELL. ALL CORE-DRILLS SHALL BE MADE WATER-TIGHT, SEALED AROUND CONDUIT PER CALTRANS REQUIREMENTS WITH FAST-SETTING EPOXY RESIN THROUGHOUT THE DEPTH OF HOLE.
11. INSTALL NEW INDICATOR LIGHT CANOPY CABLE.
12. INSTALL NEW INDICATOR LIGHT BOOTH CABLE.
13. INSTALL NEW INDICATOR LIGHT PANEL CABLE.
14. INSTALL NEW CMS COMM CABLE.
15. INSTALL NEW TYPE 1 (1½" C) CONDUIT WITH 4 #12 & 1 #12G (120V, CMS). PROVIDE CONDUIT SUPPORT AS NECESSARY.
16. INSTALL NEW SURFACE MOUNTED PANEL - MPE1. 100A BUS, 120/208 V, 3-PHASE WITH 50A-3P MAIN, 24 POLES. SEE SHEET E-24 FOR SCHEDULE.
17. DISCONNECT EXISTING FEEDERS TO EXISTING MINI TOLL PLAZA AT THE BEGINNING OF DEMOLITION STAGE OR WHEN DIRECTED BY ENGINEER.
18. ALL ELECTRICAL AND COMMUNICATIONS CIRCUITS TO THE MINI TOLL PLAZA ARE TO BE DISCONNECTED AND REMOVED. THE CONTRACTOR SHALL COORDINATE CLOSELY WITH CALTRANS AND BATA ON ALL REMOVED MATERIALS AND EQUIPMENT.
19. NOT USED
20. REMOVE AND DISPOSE OF EXISTING INDICATOR LIGHT CONTROL CABLE.
21. INSTALL NEW CMS CABINET AS SPECIFIED. (SAME AS EXISTING CMS CABINET IN UTILITY TUNNEL). ALL CMS EQUIPMENT AND CABLING SHALL BE FURNISHED, INSTALLED, INTEGRATED AND TESTED BY CONTRACTOR. SEE SHEET E-14, E-16 AND E-18 FOR CMS CABINET DETAILS.
22. INSTALL NEW NON-FUSIBLE 30A, 2P, 600V SAFETY SWITCH IN NEMA 3R ENCLOSURE. MOUNT SWITCH ADJACENT TO CMS SIGN AND PROVIDE 1" LIQUIDTIGHT FLEXIBLE CONDUIT CONNECTION BETWEEN CMS PANEL ENCLOSURE AND SAFETY SWITCH.
23. INSTALL ONE 15A, 1P, 120V CIRCUIT BREAKER FOR CMS CABINET #4 IN (E)SPACE #30.
24. MODIFY EXISTING GREEN INDICATOR LIGHT AND REPLACE WITH GREEN/FLASHING AMBER LED INDICATOR BULB.
25. TO EXISTING UPS PANEL (70A/3P MAIN)(UPS POWER).
26. REMOVE AND DISPOSE OF AS DIRECTED BY THE ENGINEER.
27. INSTALL NEW TYPE 1 (1½" C) CONDUIT. SEE SHEETS E-32 AND E-33 FOR CONDUIT SCHEDULE.
28. NOT USED
29. NOT USED
30. REMOVE EXISTING INDICATOR LIGHT SWITCH IN TOLL BOOTH AND REPLACE WITH NEW LED INDICATION BOX.
31. INSTALL NEW CMS CONTROLLERS. ROUTE CAT-5E PATCH CABLES FROM EACH CMS CONTROLLER TO NEW ETHERNET SWITCH IN CMS CABINET #1.
32. INSTALL NEW TYPE 1 (2" C) CONDUIT.
33. INSTALL NEW 12-PORT FIBER PATCH PANEL IN EXISTING SPARE PANEL AND TERMINATE NEW TYPE D CABLE.
34. INSTALL NEW TYPE 2 (2" C) CONDUIT.
35. ~~INSTALL TYPE 1 JUNCTION BOX AS SPECIFIED IN CONTRACT DOCUMENTS.~~ NOT NEEDED
36. INSTALL NEW TYPE 1 (1½" C) CONDUIT.
37. INSTALL NEW TYPE D (12-STRAND) FIBER CABLE.
38. INSTALL CONDUIT AND PULL (JUNCTION) BOXES AS NEEDED OR REQUIRED TO REACH EACH TOLL BOOTH.
39. ~~INSTALL INDICATOR LIGHT RELAYS AND TYPE 1 JUNCTION BOX.~~ CHANGED TO CONTROLLER LOCATION
40. INSTALL NEW TYPE 1 (1" C) CONDUIT WITH 2 #14 & 1 #14G (120V, CMS CABINET 4).
41. REMOVE AND REPLACE (E) 20A-1P, CIRCUIT BREAKERS #4 AND 6 WITH TWO 15A-1P CIRCUIT BREAKERS FOR CMS CABINETS 5 AND 6. SEE SHEETS E-24 TO E-26 FOR PANEL SCHEDULES.
42. INSTALL TYPE 1 (1" C) CONDUIT WITH 2 #14 & #14G (120V, CMS CABINET 6).
43. INSTALL TYPE 1 (1" C) CONDUIT WITH 4 #14 & 2 #14G (120V, CMS CABINETS 5 AND 6).
44. REPLACE (E) FIVE 20A, 1P CB 4, 6, 8, 10 & 12 WITH 15A, 1P CIRCUIT BREAKERS (FOR CMS CABINETS 13, 14, 15, 16 AND 17). SEE SHEETS E-24 TO E-26 FOR PANEL SCHEDULES.
45. INSTALL TYPE 1 (1½" C) CONDUIT WITH 8 #14 & 2 #14G (120V, CMS SIGNS 13, 14, 15, 16 AND 17).
46. REPLACE THREE (E) 20A, 1P CIRCUIT BREAKERS WITH ONE 40A, 3P CIRCUIT BREAKER FOR NEW PANEL - TB4 (120/280V). SEE SHEETS E-24 TO E-26 FOR PANEL SCHEDULES.
47. INSTALL INDICATOR LIGHT CABLES IN NEW 2" TYPE 1 CONDUIT WITH REQUIRED ELBOWS, ETC. TO INTERFACE WITH RISER.
48. INSTALL AND TERMINATE INDICATOR LIGHT CABLES TO NEW TERMINAL BLOCKS AND WIRE TO SWITCH PANEL AS SHOWN IN PLANS AND APPROVED BY THE ENGINEER.

PROJECT NOTES

AS BUILT
CONTRACT No. 0G420K, BATA-ODK
C.C.A. DATE 6.18.2010
R.E. NAME BRUCE J. SHENCHUK

E-2

THIS PLAN ACCURATE FOR ELECTRICAL WORK ONLY

STATE OF CALIFORNIA - DEPARTMENT OF TRANSPORTATION — Caltrans

CONSULTANT FUNCTIONAL SUPERVISOR: LARRY JONES

CALCULATED-DESIGNED BY | CHECKED BY | REVISED BY | DATE REVISED

LAST REVISION 00-00-00 | DATE PLOTTED => 8/30/2010 | TIME PLOTTED => 8:27:38 AM

Dist	COUNTY	ROUTE	POST MILES TOTAL PROJECT	SHEET No.	TOTAL SHEETS
04	Ala	80	1.8/2.1	27	

REGISTERED CIVIL ENGINEER — DATE 6/10/09

PLANS APPROVAL DATE

REGISTERED PROFESSIONAL ENGINEER — RAMSEY J. HISSEN — No. C-39608 — Exp. 12/31/09 — CIVIL — STATE OF CALIFORNIA

THE STATE OF CALIFORNIA OR ITS OFFICERS OR AGENTS SHALL NOT BE RESPONSIBLE FOR THE ACCURACY OR COMPLETENESS OF SCANNED COPIES OF THIS PLAN SHEET.

BAY AREA TOLL AUTHORITY
101 EIGHTH STREET
OAKLAND, CA 94607

URS CORPORATION
55 SOUTH MARKET STREET
SUITE 1500
SAN JOSE, CA 95113-2332

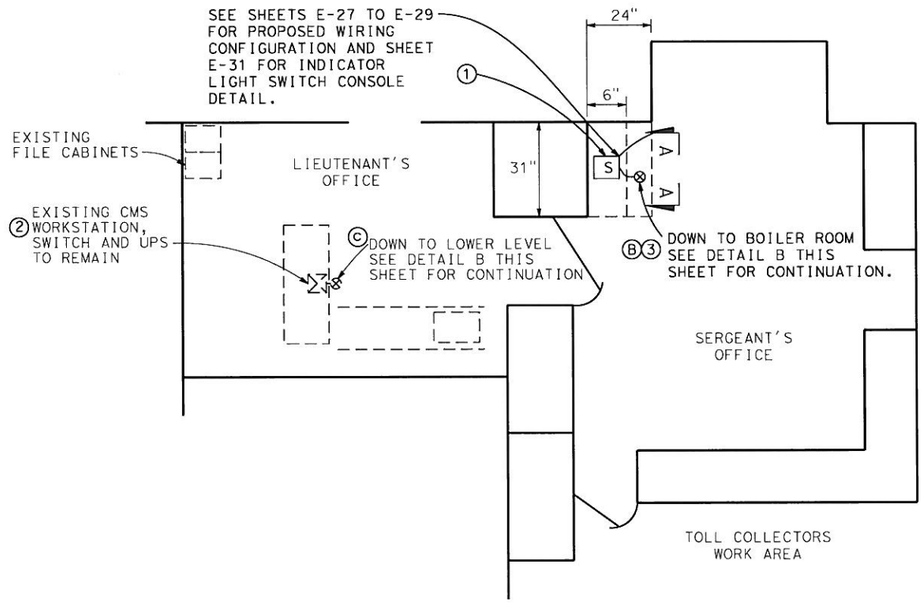

MAIN FLOOR - PARTIAL FLOOR PLAN VIEW
DETAIL A

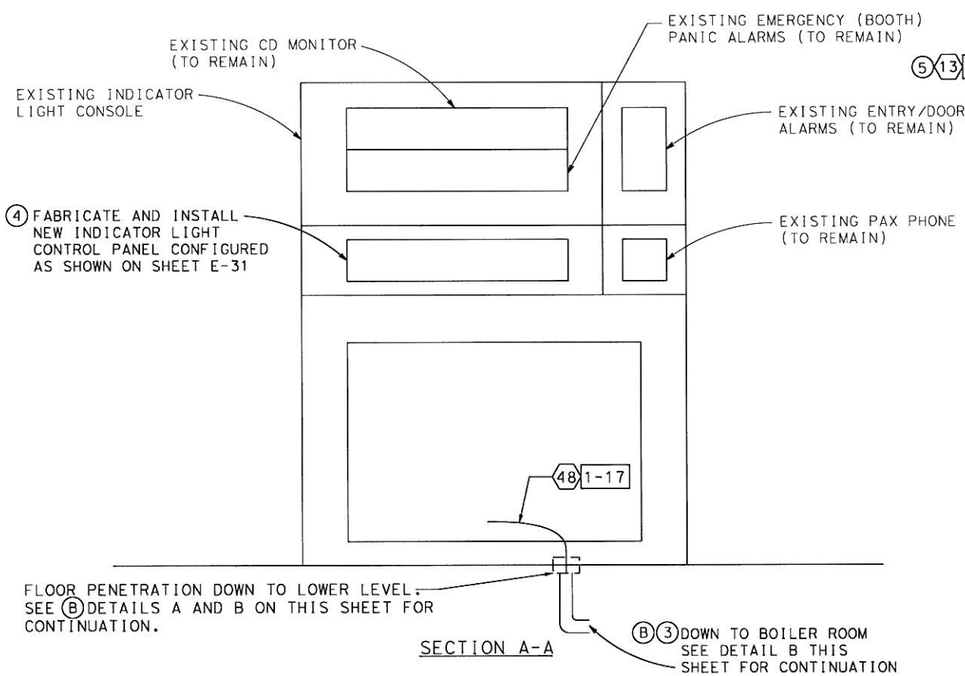

SECTION A-A

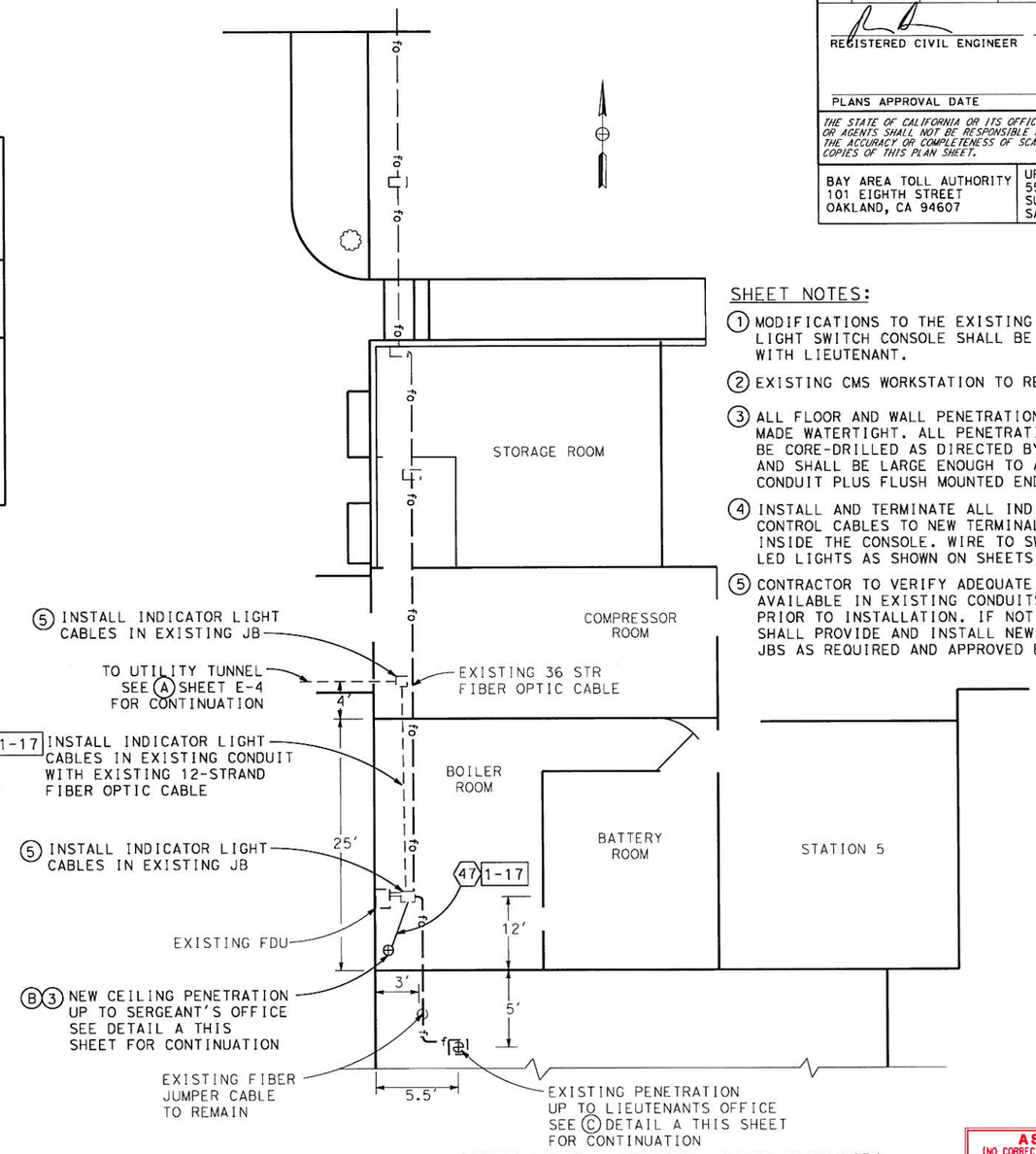

LOWER LEVEL - PARTIAL FLOOR PLAN VIEW
DETAIL B

SHEET NOTES:

1. MODIFICATIONS TO THE EXISTING INDICATOR LIGHT SWITCH CONSOLE SHALL BE COORDINATED WITH LIEUTENANT.
2. EXISTING CMS WORKSTATION TO REMAIN.
3. ALL FLOOR AND WALL PENETRATIONS SHALL BE MADE WATERTIGHT. ALL PENETRATIONS SHALL BE CORE-DRILLED AS DIRECTED BY THE ENGINEER AND SHALL BE LARGE ENOUGH TO ACCOMMODATE CONDUIT PLUS FLUSH MOUNTED END BELL.
4. INSTALL AND TERMINATE ALL INDICATOR LIGHT CONTROL CABLES TO NEW TERMINAL BLOCKS INSIDE THE CONSOLE. WIRE TO SWITCHES AND LED LIGHTS AS SHOWN ON SHEETS E-27 TO E-29.
5. CONTRACTOR TO VERIFY ADEQUATE ROOM IS AVAILABLE IN EXISTING CONDUITS AND JBS PRIOR TO INSTALLATION. IF NOT, THE CONTRACTOR SHALL PROVIDE AND INSTALL NEW CONDUITS AND JBS AS REQUIRED AND APPROVED BY THE ENGINEER.

AS BUILT
(NO CORRECTIONS ON THIS SHEET)
CONTRACT No. 0G420K, BATA.006
C.C.A. DATE 6.18.2010
R.E. NAME BRUCE J. GREWCHUK

PARTIAL MAIN FLOOR AND LOWER LEVEL CONDUIT ROUTING

NO SCALE

E-3

THIS PLAN ACCURATE FOR ELECTRICAL WORK ONLY

STATE OF CALIFORNIA - DEPARTMENT OF TRANSPORTATION — Caltrans

CONSULTANT FUNCTIONAL SUPERVISOR: LARRY JONES

CALCULATED-DESIGNED BY | CHECKED BY | REVISED BY | DATE REVISED

LAST REVISION 00-00-00 | DATE PLOTTED => 8/30/2010 | TIME PLOTTED => 7:54:07 AM

BORDER LAST REVISED 4/11/2008 | RELATIVE BORDER SCALE IS IN INCHES 0 1 2 3 | USERNAME=> jason_vincent | DGN FILE=> I:\Projects\28645026\its\ORT\AS-BUILTS\E-3_new.dgn | CU 00000 | EA 0G420K

Dist	COUNTY	ROUTE	POST MILES TOTAL PROJECT	SHEET No.	TOTAL SHEETS
04	Ala	80	1.8/2.1	28	

REGISTERED CIVIL ENGINEER — DATE 6/10/09

PLANS APPROVAL DATE

REGISTERED PROFESSIONAL ENGINEER — RAMSEY J. HISSEN — No. C-39608 — Exp. 12/31/09 — CIVIL — STATE OF CALIFORNIA

THE STATE OF CALIFORNIA OR ITS OFFICERS OR AGENTS SHALL NOT BE RESPONSIBLE FOR THE ACCURACY OR COMPLETENESS OF SCANNED COPIES OF THIS PLAN SHEET.

BAY AREA TOLL AUTHORITY
101 EIGHTH STREET
OAKLAND, CA 94607

URS CORPORATION
55 SOUTH MARKET STREET
SUITE 1500
SAN JOSE, CA 95113-2332

SHEET NOTES:

1. INTERCEPT EXISTING CONDUIT, CUT FLUSH AND INSTALL NEW JUNCTION BOX AND TERMINATE CONDUIT IN JUNCTION BOX.
2. EXISTING 2" CONDUIT
3. EXISTING 1½" CONDUIT.
4. SEE SHEET E-14 AND E-16 FOR CABINET DETAILS.
5. EXISTING COMM CABLES LANES 6-12
6. INSTALL 1¼" C (TYPE 1 CONDUIT) WITH 10 #14 & 2 #14G (120V, CMS 1, 2, 3, 4 & 5)
7. REMOVE AND REPLACE (E) 4 #10 (120V, EMS POWER) WITH (N) 10 #14 & 2 #14G (120V, CMS 1 TO 5 POWER)
8. DISCONNECT AND REMOVE (E) BRANCH CIRCUITS #22 & #24 (CMS LANES 1 & 2) AFTER CMS PANELS FOR LANES 1 & 2 ARE CONNECTED TO (N) BRANCH CIRCUITS (TB4 PANEL)
9. EXISTING 3" CONDUIT (EMPTY)
10. EXISTING TYPE D 12-STR FIBER CABLE

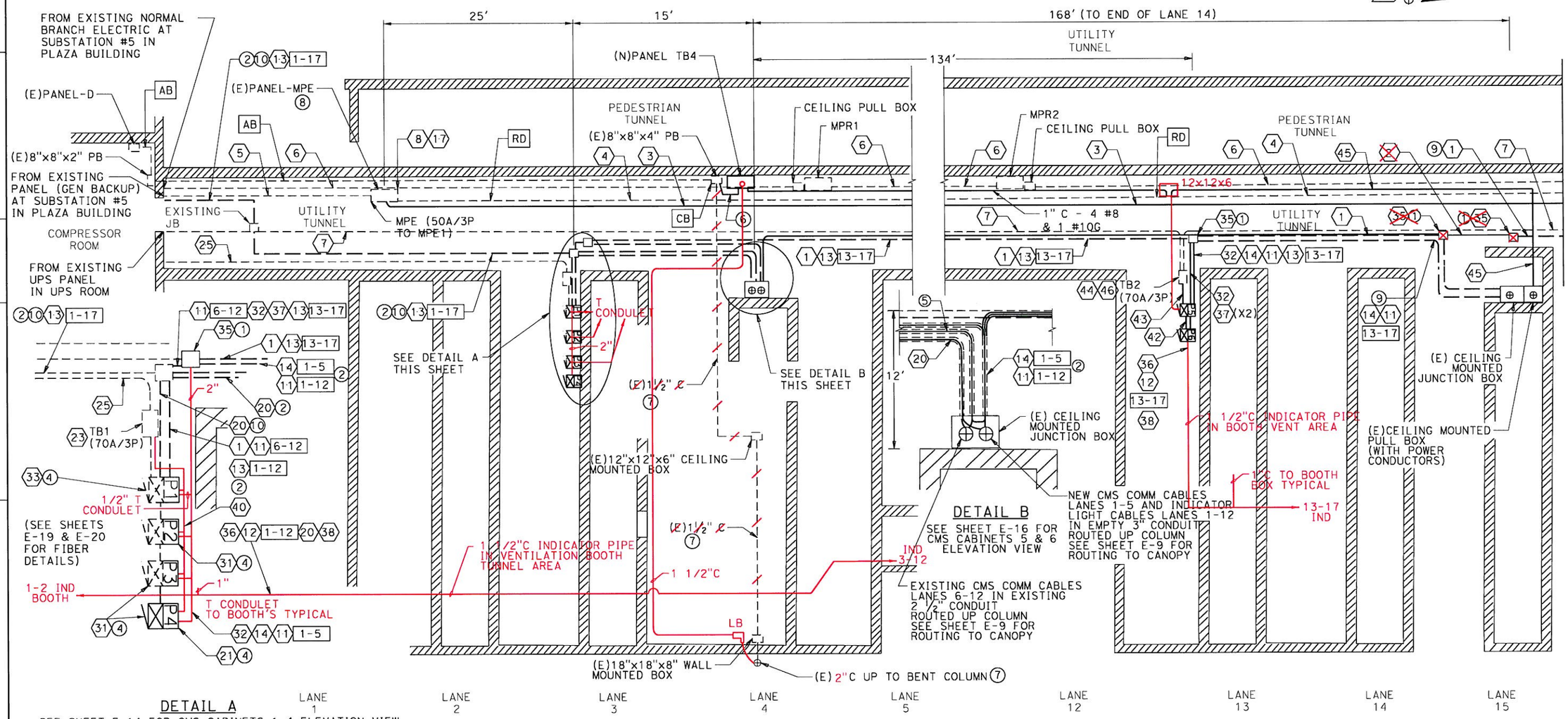

DETAIL A

SEE SHEET E-14 FOR CMS CABINETS 1-4 ELEVATION VIEW

LEGEND

P1 = CMS CABINET 1
P2 = CMS CABINET 2
P3 = CMS CABINET 3
P4 = CMS CABINET 4
P5 = CMS CABINET 5
P6 = CMS CABINET 6

NOTES:

1. CONTRACTOR TO ADD CEILING MOUNTED JUNCTION (PULL) BOXES AS REQUIRED OR NEEDED.
2. SEE SHEETS E-24 TO E-26 FOR ELECTRICAL PANEL SCHEDULES.

TUNNEL LEVEL - PARTIAL FLOOR PLAN VIEW

TUNNEL LEVEL CONDUIT ROUTING (SHEET 1 OF 2)

NO SCALE

AS BUILT
CONTRACT No. 0G420K BATA-006
C.C.A. DATE 6.18.2010
R.E. NAME BRUCE J. SHERWICK

THIS PLAN ACCURATE FOR ELECTRICAL WORK ONLY

E-4

STATE OF CALIFORNIA - DEPARTMENT OF TRANSPORTATION — Caltrans

CONSULTANT FUNCTIONAL SUPERVISOR: LARRY JONES

CALCULATED-DESIGNED BY | CHECKED BY | REVISED BY | DATE REVISED

LAST REVISION 00-00-00 | DATE PLOTTED => 8/30/2010 | TIME PLOTTED => 7:54:16 AM

BORDER LAST REVISED 4/11/2008 | RELATIVE BORDER SCALE IS IN INCHES 0 1 2 3 | USERNAME=> jason_vincent | DGN FILE=> I:\Projects\28645026\its\ORT\AS-BUILTS\E-4_new.dgn | CU 00000 | EA 0G420K

Dist	COUNTY	ROUTE	POST MILES TOTAL PROJECT	SHEET No.	TOTAL SHEETS
04	Ala	80	1.8/2.1	29	

REGISTERED CIVIL ENGINEER — DATE 6/10/09

PLANS APPROVAL DATE

REGISTERED PROFESSIONAL ENGINEER — RAWSEY J. HISSEN — No. C-39608 — Exp. 12/31/09 — CIVIL — STATE OF CALIFORNIA

THE STATE OF CALIFORNIA OR ITS OFFICERS OR AGENTS SHALL NOT BE RESPONSIBLE FOR THE ACCURACY OR COMPLETENESS OF SCANNED COPIES OF THIS PLAN SHEET.

BAY AREA TOLL AUTHORITY
101 EIGHTH STREET
OAKLAND, CA 94607

URS CORPORATION
55 SOUTH MARKET STREET
SUITE 1500
SAN JOSE, CA 95113-2332

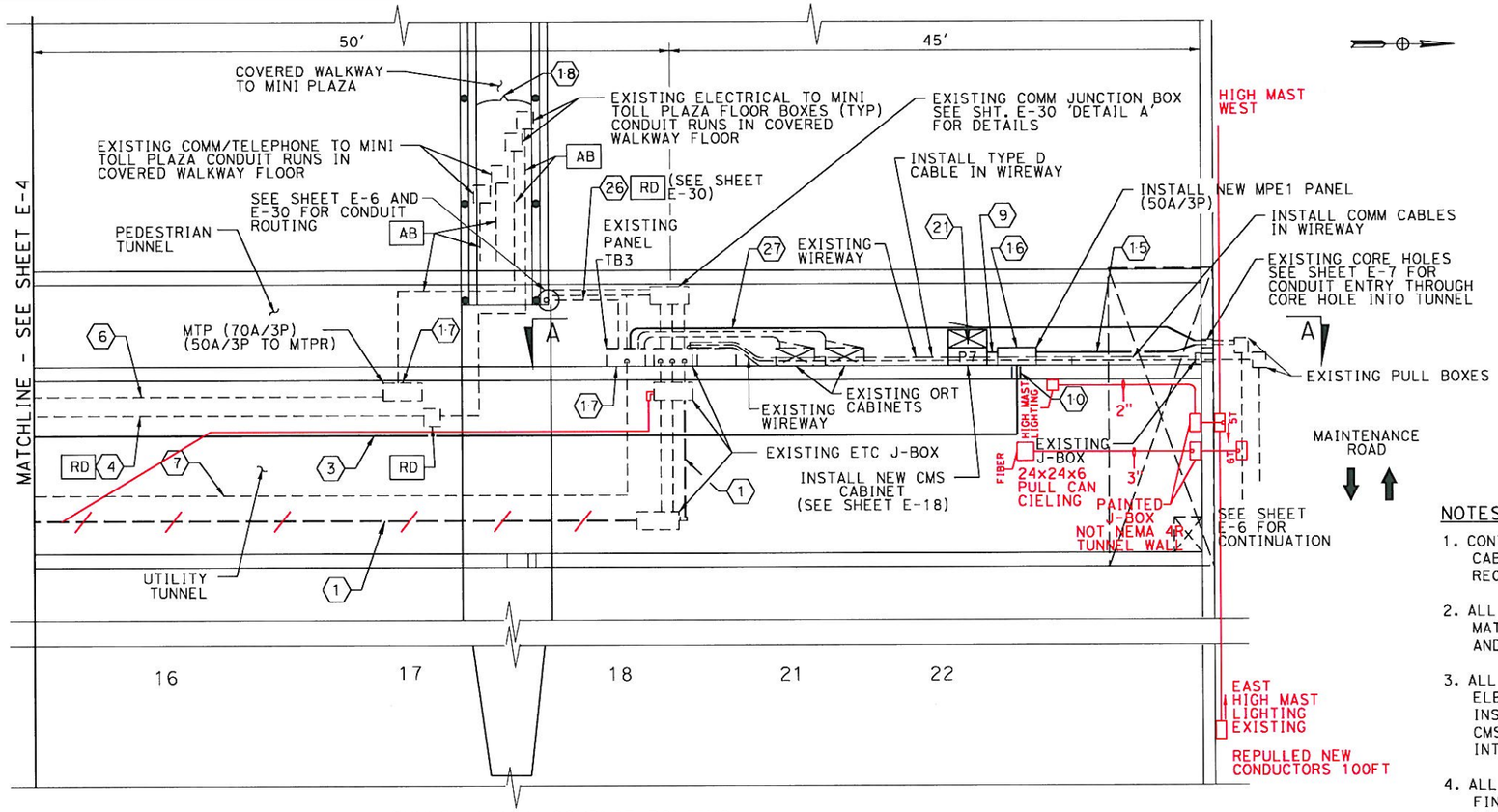

TUNNEL LEVEL CONDUIT ROUTING

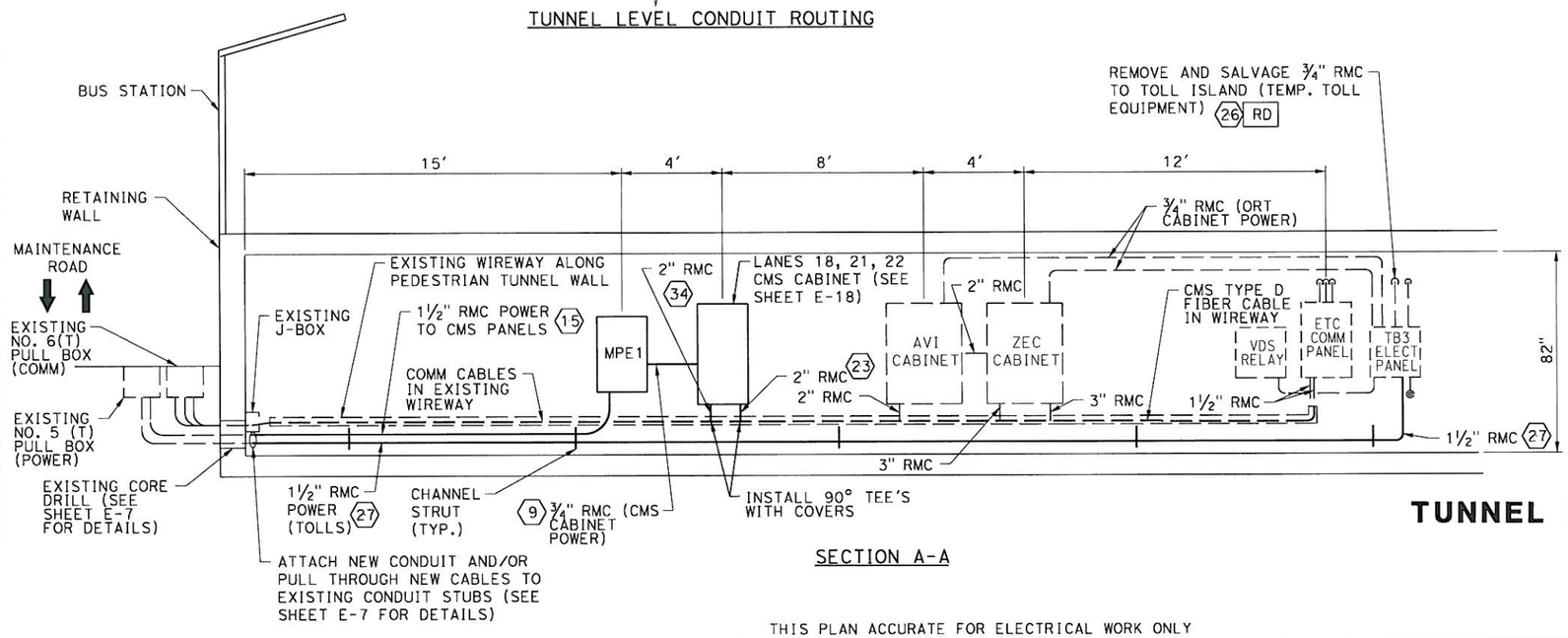

SECTION A-A

NOTES:

1. CONTRACTOR SHALL INSTALL NEW WALL MOUNTED CMS CABINET, EQUIPMENT AND MATERIALS MEETING THE MINIMUM REQUIREMENTS IN THE PLANS AND SPECIFICATIONS.
2. ALL CMS SYSTEM, ASSOCIATED CABLING, EQUIPMENT AND MATERIALS SHALL BE PROVIDED, INSTALLED, INTEGRATED AND TESTED BY THE CONTRACTOR.
3. ALL ORT TOLLING EQUIPMENT, CABLING (COMM AND ELECTRICAL), AND ALL OTHER REQUIRED MATERIALS WILL BE INSTALLED BY OTHERS. THE CONTRACTOR SHALL COORDINATE CMS INSTALLATION WORK WITH THE ORT TOLL SYSTEMS INTEGRATOR AND THE CMS MANUFACTURER.
4. ALL CONDUIT LOCATIONS AND QUANTITIES ARE APPROXIMATE. FINAL CONFIGURATION, LOCATION AND QUANTITY OF ALL EQUIPMENT AND MATERIALS SHALL BE FIELD VERIFIED BY CONTRACTOR AND AS DIRECTED AND APPROVED BY THE ENGINEER.
5. ALL CABINETS MOUNTED TO THE CONCRETE TUNNEL WALL SHALL BE ATTACHED TO THE WALL USING 3/8" DIA. EXPANSION ANCHORS. TOTAL 4 PER CABINET ATTACHED TO THE CONCRETE WALL.
6. REMOVE AND DISPOSE OF EXISTING AVI ANTENNA AND COMM CABLES IN WIREWAY RUNNING FROM ORT CABINETS TO EXISTING ETC COMM PANEL. COORDINATE REMOVAL WITH THE ENGINEER AND THE ORT TOLL SYSTEMS INTEGRATOR.
7. SEE SHEET E-24 FOR 'MPE1' AND 'TB3' ELECTRICAL PANEL SCHEDULES.
8. SEE SHEETS E-32 AND E-33 FOR CONDUCTOR TYPE AND SIZES.

AS BUILT
CONTRACT No. OG420K BATA ODA
C.C.A. DATE 6.18.2010
R.E. NAME BRUCE J. SHENCHUK

TUNNEL LEVEL CONDUIT ROUTING (SHEET 2 OF 2)

NO SCALE

THIS PLAN ACCURATE FOR ELECTRICAL WORK ONLY

E-5

REVISED BY | DATE REVISED
CALCULATED-DESIGNED BY | CHECKED BY
CONSULTANT FUNCTIONAL SUPERVISOR: LARRY JONES
STATE OF CALIFORNIA - DEPARTMENT OF TRANSPORTATION
Caltrans

LAST REVISION 00-00-00 | DATE PLOTTED => 8/30/2010 | TIME PLOTTED => 7:54:27 AM

BORDER LAST REVISED 4/11/2008 | RELATIVE BORDER SCALE IS IN INCHES 0 1 2 3 | USERNAME=> jason_vincent | DGN FILE=> I:\Projects\28645026\its\ORT\AS-BUILTS\E-5_new.dgn | CU 00000 | EA OG420K

Dist	COUNTY	ROUTE	POST MILES TOTAL PROJECT	SHEET No.	TOTAL SHEETS
04	Ala	80	1.8/2.1	30	

REGISTERED CIVIL ENGINEER 6/10/09 DATE

PLANS APPROVAL DATE

REGISTERED PROFESSIONAL ENGINEER RAMSEY J. HISSEN No. C-39608 Exp. 12/31/09 CIVIL STATE OF CALIFORNIA

THE STATE OF CALIFORNIA OR ITS OFFICERS OR AGENTS SHALL NOT BE RESPONSIBLE FOR THE ACCURACY OR COMPLETENESS OF SCANNED COPIES OF THIS PLAN SHEET.

BAY AREA TOLL AUTHORITY
101 EIGHTH STREET
OAKLAND, CA 94607

URS CORPORATION
55 SOUTH MARKET STREET
SUITE 1500
SAN JOSE, CA 95113-2332

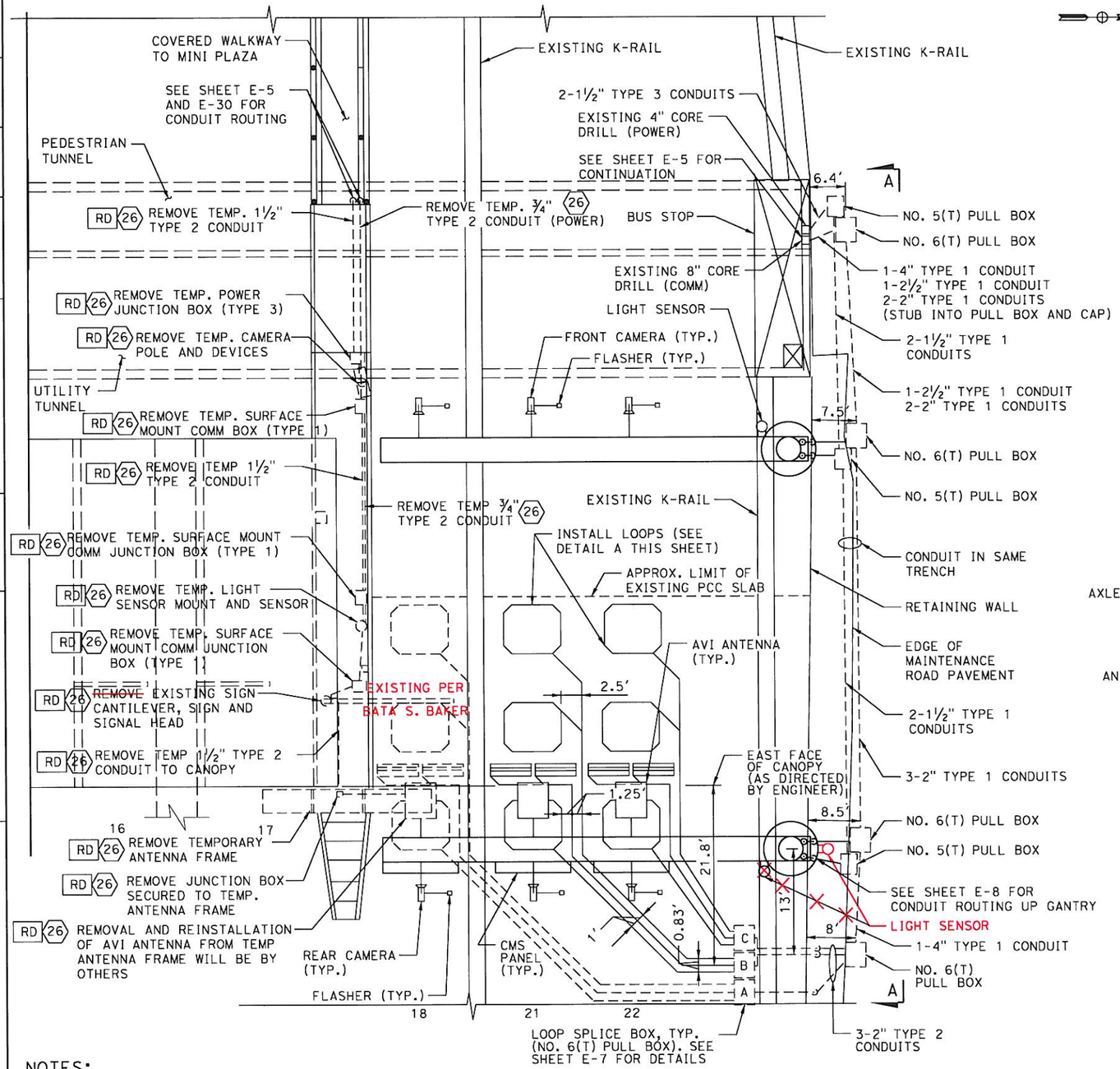

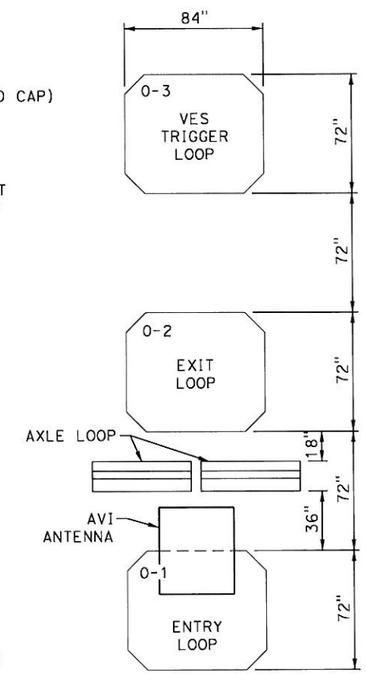

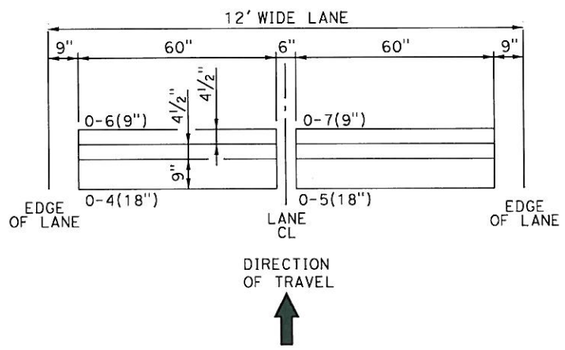

DETAIL A - LOOP CONFIGURATION

AS BUILT
CONTRACT No. 06420K BATA-00K
C.C.A. DATE 6.18.2010
R.E. NAME BRUCE J. SHENCHUK

LANE LEVEL CONDUIT ROUTING

NO SCALE

NOTES:

1. FOR SECTION A-A, SEE SHEET E-7.
2. ALL ORT/TOLL EQUIPMENT SHOWN IS FOR ILLUSTRATION PURPOSES ONLY AND WILL BE INSTALLED BY OTHERS.
3. REMOVAL AND DISPOSAL OF ALL EQUIPMENT AND MATERIALS SHALL BE COORDINATED WITH AND AS DIRECTED BY THE ENGINEER. CANOPY FACADE SHALL BE RESORED TO ORIGINAL CONDITION.
4. CONTRACTOR SHALL CUT LOOPS, INSTALL LOOP CONDUCTORS AND SEAL LOOPS AS PER THE PLANS AND SPECIFICATIONS.
5. CONTRACTOR TO WORK CLOSELY WITH THE ORT TOLL SYSTEMS INTEGRATOR IN THE INSTALLATION AND SPLICING OF LOOPS FOR LANES 21 AND 22.
6. CONTRACTOR TO ROUTE CONDUIT DOWN GANTRIES TAKING INTO ACCOUNT THE RELOCATION OF THE EXPOSED STORM DRAIN PIPE AT THE BASE OF THE WALL ON MAINTENANCE (RADIO) ROAD.
7. SEE SHEETS E-32 & E-33 FOR CONDUCTOR TYPES AND SIZES.

THIS PLAN ACCURATE FOR ELECTRICAL WORK ONLY

STATE OF CALIFORNIA - DEPARTMENT OF TRANSPORTATION
Caltrans
CONSULTANT FUNCTIONAL SUPERVISOR LARRY JONES
CALCULATED-DESIGNED BY
CHECKED BY
REVISED BY
DATE REVISED

LAST REVISION 00-00-00
DATE PLOTTED => 8/30/2010
TIME PLOTTED => 7:54:39 AM

E-6

Dist	COUNTY	ROUTE	POST MILES TOTAL PROJECT	SHEET No.	TOTAL SHEETS
04	Ala	80	1.8/2.1	31	

REGISTERED CIVIL ENGINEER — DATE 6/10/09

PLANS APPROVAL DATE

REGISTERED PROFESSIONAL ENGINEER — RAMSEY J. HISSEN — No. C-39608 — Exp. 12/31/09 — CIVIL — STATE OF CALIFORNIA

THE STATE OF CALIFORNIA OR ITS OFFICERS OR AGENTS SHALL NOT BE RESPONSIBLE FOR THE ACCURACY OR COMPLETENESS OF SCANNED COPIES OF THIS PLAN SHEET.

BAY AREA TOLL AUTHORITY
101 EIGHTH STREET
OAKLAND, CA 94607

URS CORPORATION
55 SOUTH MARKET STREET
SUITE 1500
SAN JOSE, CA 95113-2332

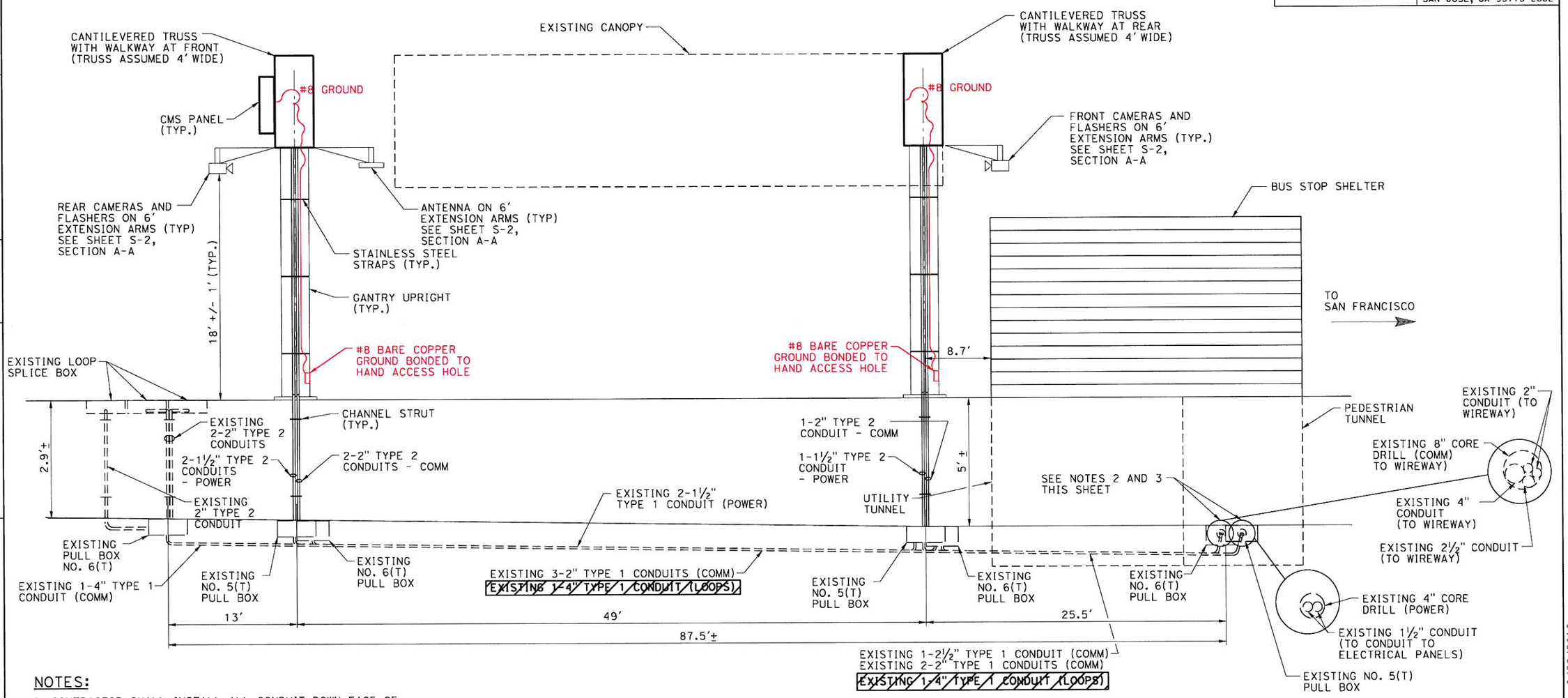

NOTES:

1. CONTRACTOR SHALL INSTALL ALL CONDUIT DOWN FACE OF RETAINING WALL ONCE ALL NECESSARY RETAINING WALL RESTORATION WORK HAS BEEN COMPLETED AS A RESULT OF GANTRY FOUNDATION INSTALLATION.
2. SEE SHEETS E-32 & E-33 FOR CONDUCTOR TYPES AND SIZES.
3. SEE SHEET E-5 FOR TUNNEL CONDUIT ROUTING.

RETAINING WALL CONDUIT ROUTING (SECTION A-A)

NO SCALE

AS BUILT
CONTRACT No. 06420K, BATA-006
C.C.A. DATE 6.18.2010
R.E. NAME BRUCE J. SHENKHUK

E-7

THIS PLAN ACCURATE FOR ELECTRICAL WORK ONLY

STATE OF CALIFORNIA - DEPARTMENT OF TRANSPORTATION — Caltrans

CONSULTANT FUNCTIONAL SUPERVISOR: LARRY JONES

CALCULATED-DESIGNED BY | CHECKED BY | REVISED BY | DATE REVISED

LAST REVISION 00-00-00 | DATE PLOTTED => 8/30/2010 | TIME PLOTTED => 7:54:50 AM

BORDER LAST REVISED 4/11/2008 | RELATIVE BORDER SCALE IS IN INCHES 0 1 2 3 | USERNAME=> jason_vincent | DGN FILE=> I:\Projects\28645026\its\ORT\AS-BUILTS\E-7_new.dgn | CU 00000 | EA 0G420K

Dist	COUNTY	ROUTE	POST MILES TOTAL PROJECT	SHEET No.	TOTAL SHEETS
04	Ala	80	1.8/2.1	32	

REGISTERED CIVIL ENGINEER — DATE 6/10/09

PLANS APPROVAL DATE

REGISTERED PROFESSIONAL ENGINEER — RAMSEY J. HISSEN — No. C-39608 — Exp. 12/31/09 — CIVIL — STATE OF CALIFORNIA

THE STATE OF CALIFORNIA OR ITS OFFICERS OR AGENTS SHALL NOT BE RESPONSIBLE FOR THE ACCURACY OR COMPLETENESS OF SCANNED COPIES OF THIS PLAN SHEET.

BAY AREA TOLL AUTHORITY
101 EIGHTH STREET
OAKLAND, CA 94607

URS CORPORATION
55 SOUTH MARKET STREET
SUITE 1500
SAN JOSE, CA 95113-2332

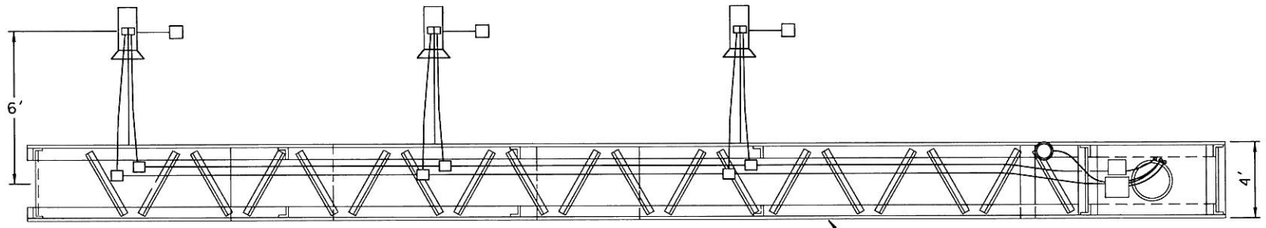

WEST GANTRY CONDUIT ROUTING

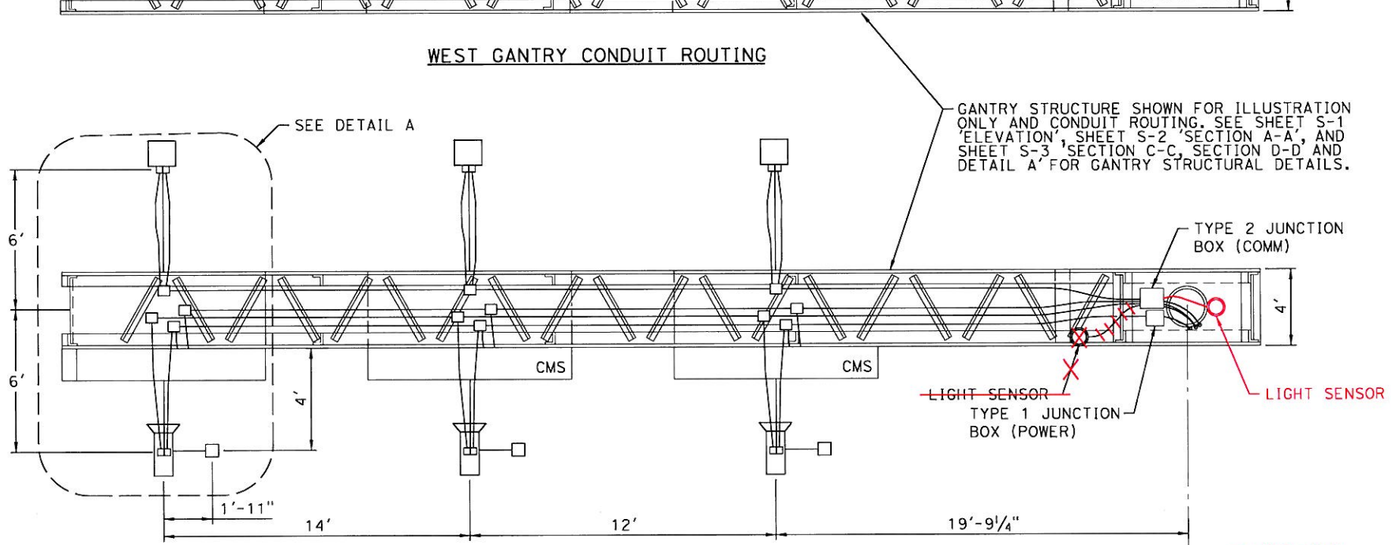

EAST GANTRY CONDUIT ROUTING

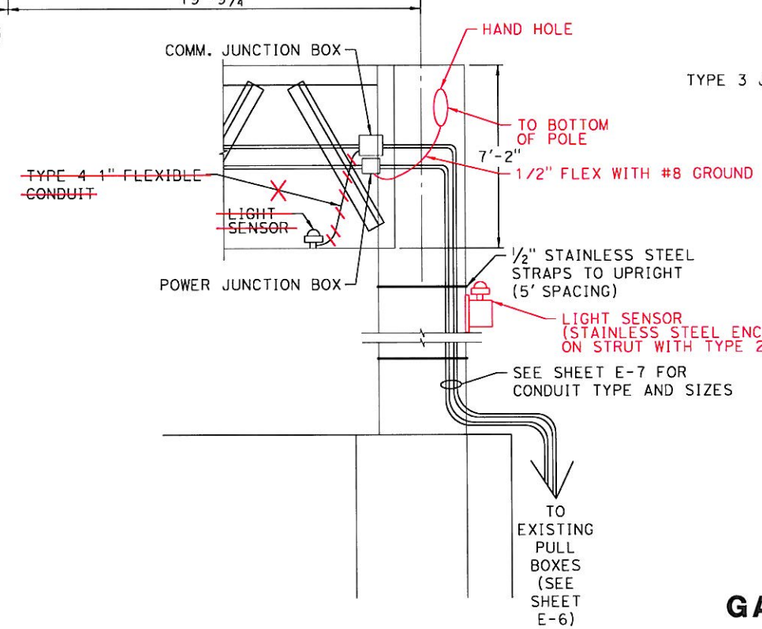

GANTRY ELEVATION VIEW

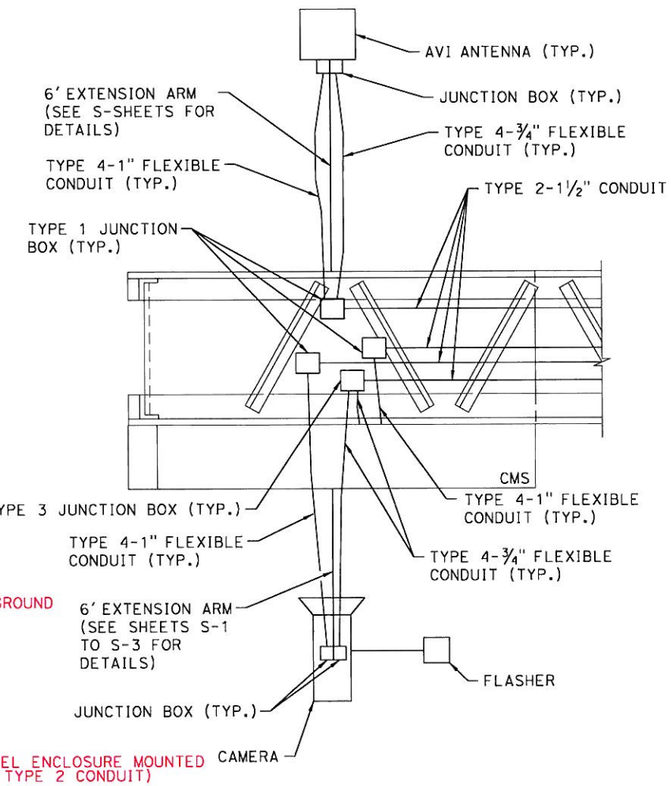

DETAIL A

NOTES:

1. INSTALLATION OF ALL ORT TOLL EQUIPMENT AND ASSOCIATED CABLING WILL BE PROVIDED BY OTHERS.
2. ALL CONDUIT AND JUNCTION BOXES SHALL BE FASTENED TO STRUCTURAL MEMBERS AND EXTENSION ARMS USING STAINLESS STEEL STRAPS AND BEAM CLAMPS (SPACED AT 5' MAX.) OR AS REQUIRED.
3. CONTRACTOR TO INSTALL 2" TYPE 2 THREADED CONDUIT FOR MOUNTING LIGHT SENSORS SECURED TO THE GANTRY STRUCTURES.
4. CONTRACTOR TO INSTALL ALL REQUIRED AND NECESSARY CONDUIT FITTINGS AND ACCESS PANELS FOR ROUTING OF CABLE FOR THE LIGHT SENSORS AND ALL OTHER EQUIPMENT.
5. JUNCTION BOXES ON EXTENSION ARMS SHALL BE SIZED AS NEEDED BY CONTRACTOR FOR APPLICATION TO BE REVIEWED AND APPROVED BY THE ENGINEER.

GANTRY CONDUIT ROUTING

NO SCALE

AS BUILT
CONTRACT No. 06420K, 6420-04
C.C.A. DATE 6.18.2010
R.E. NAME BRUCE J. SHEWCHUK

E-8

THIS PLAN ACCURATE FOR ELECTRICAL WORK ONLY

STATE OF CALIFORNIA - DEPARTMENT OF TRANSPORTATION — Caltrans

CONSULTANT FUNCTIONAL SUPERVISOR: LARRY JONES

CALCULATED-DESIGNED BY | CHECKED BY | REVISED BY | DATE REVISED

LAST REVISION 00-00-00 | DATE PLOTTED => 8/30/2010 | TIME PLOTTED => 7:54:58 AM

BORDER LAST REVISED 4/11/2008 | RELATIVE BORDER SCALE IS IN INCHES 0 1 2 3 | USERNAME=> jason_vincent | DGN FILE=> I:\Projects\28645026\its\ORT\AS-BUILTS\E-8_new.dgn | CU 00000 | EA 0G420K

Dist	COUNTY	ROUTE	POST MILES TOTAL PROJECT	SHEET No.	TOTAL SHEETS
04	Ala	80	1.8/2.1	33	

REGISTERED CIVIL ENGINEER — DATE 6/10/09

PLANS APPROVAL DATE

REGISTERED PROFESSIONAL ENGINEER — RAMSEY J. HISSEN — No. C-39608 — Exp. 12/31/09 — CIVIL — STATE OF CALIFORNIA

THE STATE OF CALIFORNIA OR ITS OFFICERS OR AGENTS SHALL NOT BE RESPONSIBLE FOR THE ACCURACY OR COMPLETENESS OF SCANNED COPIES OF THIS PLAN SHEET.

BAY AREA TOLL AUTHORITY
101 EIGHTH STREET
OAKLAND, CA 94607

URS CORPORATION
55 SOUTH MARKET STREET
SUITE 1500
SAN JOSE, CA 95113-2332

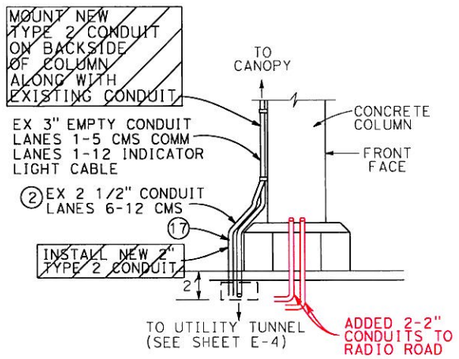

DETAIL A

CONDUIT ROUTING UP COLUMN LANES 3 AND 4

NOTE:
CMS POWER SHALL USE EXISTING 1½" C ON NORTH BENT COLUMN (EXISTING EMS CONDUIT) (SEE SHEET E-4)

SHEET NOTES:

1. CONTRACTOR TO INTERCEPT AND CUT EXISTING INDICATOR LIGHT CABLES IN EXISTING JUNCTION BOX. INSTALL NEW RELAYS AND ROUTE NEW INDICATOR LIGHT CABLES DOWN TO CMS CABINET. SEE SHEET E-27 to 29 FOR PROPOSED WIRING CONFIGURATION.
2. EXISTING GREEN, BLACK, & WHITE CABLES TO BE REMOVED.
3. FINAL LOCATION OF CONDUIT AND JUNCTION BOX ROUTING AND ATTACHMENT DETAILS SHALL BE COORDINATED BY THE CONTRACTOR WITH THE ENGINEER PRIOR TO INSTALLATION.
4. ROUTE CONDUIT UP THE BACKSIDE OF THE COLUMN ALONG WITH EXISTING CONDUIT. SEE SHEET E-4 FOR CANOPY PLAN VIEW.
5. REMOVE AND SALVAGE EXISTING CMS/EMS PANELS IN LANES AS DIRECTED BY CALTRANS AND BATA AND INSTALL NEW CMS PANELS.
6. SEE SHEETS E-23 TO 26 FOR ELECTRICAL DETAILS.
7. SEE S-1, S-3, AND S-4 SHEETS FOR CMS PANEL MOUNTING TO CANOPY DETAILS.
8. INTERCEPT EXISTING CONDUIT, CUT FLUSH AND INSTALL NEW JUNCTION BOX AND TERMINATE CONDUIT IN JUNCTION BOX.
9. (E)2 #14 & #14G (120V, CMS POWER).
10. DISCONNECTED (E)SIGN FROM (E)BRANCH CIRCUIT TO ACCOMMODATE REMOVAL. CONNECT (N)SIGN TO NEW BRANCH CIRCUIT (FROM TB4).
11. INSTALL TYPE 2 (1½" C) CONDUIT WITH 4 #14 & 1 #14G (120V, CMS POWER).
12. INSTALL TYPE 2 (1" C) CONDUIT WITH 2 #14 & 1 #14G (120V, CMS POWER).
13. INSTALL TYPE 2 (1½" C) CONDUIT WITH 6 #14 & 1 #14G (120V, CMS POWER).
14. INSTALL TYPE 2 JUNCTION BOX.
15. INSTALL TYPE 2 (1½" C) CONDUIT WITH 10 #14 & 2 #14G (120V, CMS POWER)
16. INSTALL TYPE 1 (1½" C) CONDUIT WITH 10 #14 & 2 #14G (120V, CMS POWER)
17. INSTALL 10 #14 & 1 #14G (120V, CMS POWER) IN (E)1½" CONDUIT.
18. INTERCEPT (E)CONDUIT FROM CMS SIGNS AND EXTEND TO (N)PANEL-TB4.
19. SEE SHEETS E-24 TO E-26 FOR ELECTRICAL PANELBOARD SCHEDULES.
20. INSTALL TYPE 1 (1" C) CONDUIT WITH 4 #8 & 1 #10G (120/208V POWER)

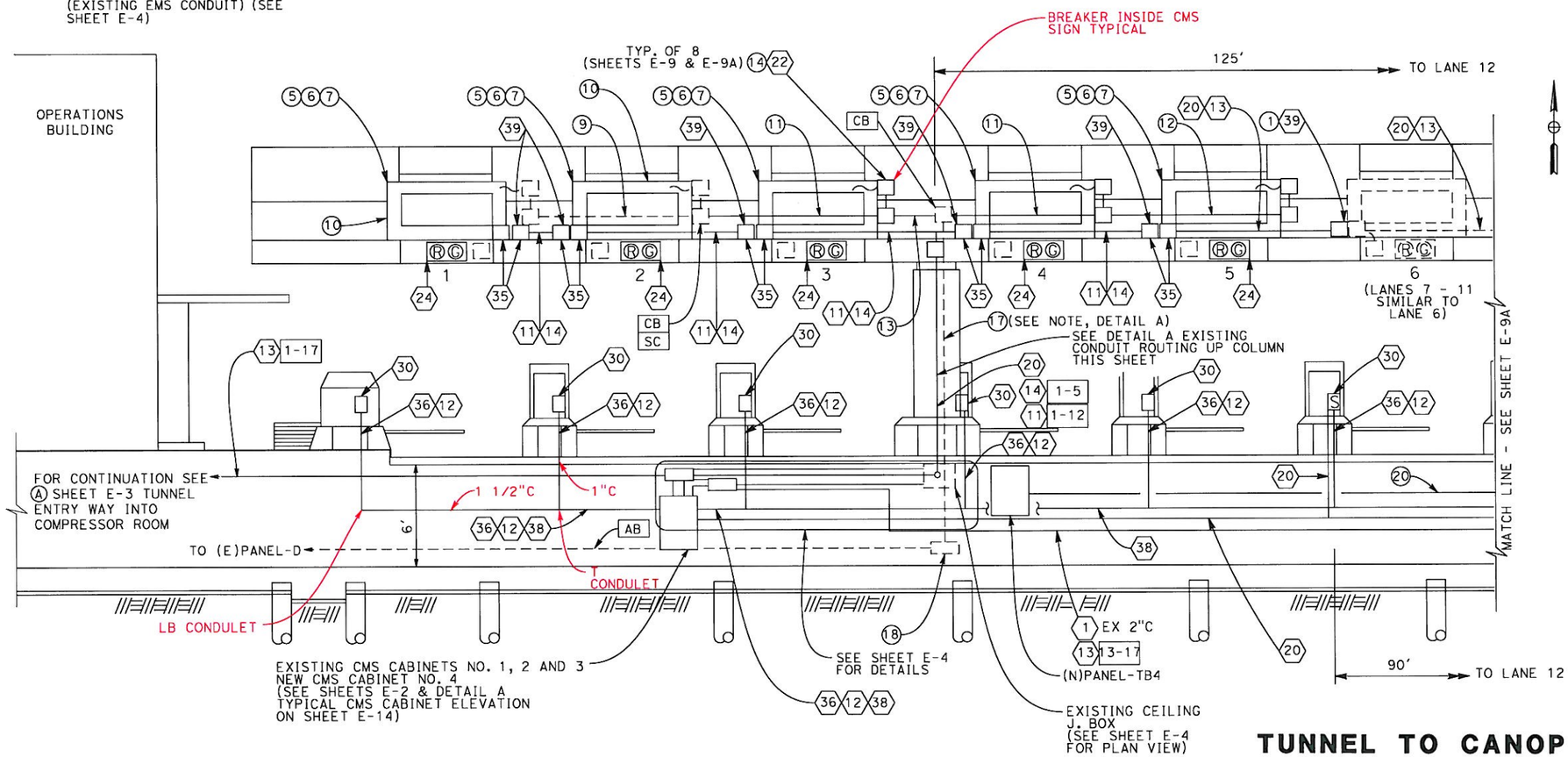

ELEVATION VIEW

TUNNEL TO CANOPY CONDUIT ROUTING (SHEET 1 OF 2)

NO SCALE

AS BUILT
CONTRACT No. 06420K, BATA-006
C.C.A. DATE 6.18.2010
R.E. NAME BRUCE J. CHENCHUK

THIS PLAN ACCURATE FOR ELECTRICAL WORK ONLY

E-9

STATE OF CALIFORNIA - DEPARTMENT OF TRANSPORTATION — Caltrans
CONSULTANT FUNCTIONAL SUPERVISOR: LARRY JONES
CALCULATED-DESIGNED BY / CHECKED BY
REVISED BY / DATE REVISED

LAST REVISION 00-00-00 — DATE PLOTTED => 8/30/2010 — TIME PLOTTED => 7:55:07 AM

BORDER LAST REVISED 4/11/2008 — RELATIVE BORDER SCALE IS IN INCHES 0 1 2 3 — USERNAME=> jason_vincent — DGN FILE=> I:\Projects\28645026\its\ORT\AS-BUILTS\E-9_new.dgn — CU 00000 — EA 0G420K

Dist	COUNTY	ROUTE	POST MILES TOTAL PROJECT	SHEET No.	TOTAL SHEETS
04	Ala	80	1.8/2.1	34	

REGISTERED CIVIL ENGINEER — DATE 6/10/09

PLANS APPROVAL DATE

REGISTERED PROFESSIONAL ENGINEER — RAMSEY J. HISSEN — No. C-39608 — Exp. 12/31/09 — CIVIL — STATE OF CALIFORNIA

THE STATE OF CALIFORNIA OR ITS OFFICERS OR AGENTS SHALL NOT BE RESPONSIBLE FOR THE ACCURACY OR COMPLETENESS OF SCANNED COPIES OF THIS PLAN SHEET.

BAY AREA TOLL AUTHORITY
101 EIGHTH STREET
OAKLAND, CA 94607

URS CORPORATION
55 SOUTH MARKET STREET
SUITE 1500
SAN JOSE, CA 95113-2332

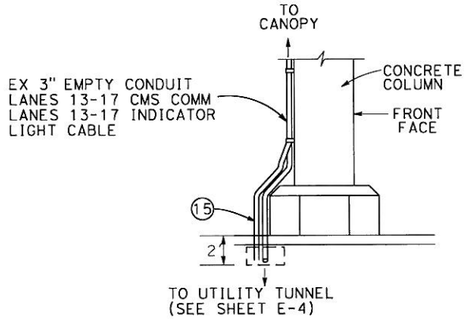

DETAIL A

CONDUIT ROUTING UP COLUMN
LANES 14 AND 15

SHEET NOTES:

1. ~~CONTRACTOR TO INTERCEPT AND CUT EXISTING INDICATOR LIGHT CABLES IN EXISTING JUNCTION BOX. INSTALL NEW RELAYS AND ROUTE NEW INDICATOR LIGHT CABLES DOWN TO CMS CABINET. SEE SHEET E-27 to 29 FOR PROPOSED WIRING CONFIGURATION.~~
2. EXISTING GREEN, BLACK, & WHITE CABLES TO BE REMOVED.
3. FINAL LOCATION OF CONDUIT AND JUNCTION BOX ROUTING AND ATTACHMENT DETAILS SHALL BE COORDINATED BY THE CONTRACTOR WITH THE ENGINEER PRIOR TO INSTALLATION.
4. ROUTE CONDUIT UP THE BACKSIDE OF THE COLUMN ALONG WITH EXISTING CONDUIT. SEE SHEET E-4 FOR CANOPY PLAN VIEW.
5. REMOVE AND SALVAGE EXISTING CMS/EMS PANELS IN LANES AS DIRECTED BY CALTRANS AND BATA AND INSTALL NEW CMS PANELS.
6. SEE SHEETS E-23 TO 26 FOR ELECTRICAL DETAILS.
7. SEE S-1, S-3, AND S-4 SHEETS FOR CMS PANEL MOUNTING TO CANOPY DETAILS.
8. INTERCEPT EXISTING CONDUIT, CUT FLUSH AND INSTALL NEW JUNCTION BOX AND TERMINATE CONDUIT IN JUNCTION BOX.
9. (E)2 #14 & #14G (120V, CMS POWER).
10. DISCONNECTED (E)SIGN FROM (E)BRANCH CIRCUIT TO ACCOMMODATE REMOVAL. CONNECT (N)SIGN TO NEW BRANCH CIRCUIT (FROM TB4).
11. INSTALL TYPE 2 (1½" C) CONDUIT WITH 4 #14 & 1 #14G (120V, CMS POWER).
12. INSTALL TYPE 2 (1" C) CONDUIT WITH 2 #14 & 1 #14G (120V, CMS POWER).
13. INSTALL TYPE 2 (1½" C) CONDUIT WITH 6 #14 & 1 #14G (120V, CMS POWER).
14. INSTALL TYPE 2 JUNCTION BOX.
15. INSTALL TYPE 2 (1½" C) CONDUIT WITH 10 #14 & 2 #14G (120V, CMS POWER)
16. INSTALL TYPE 1 (1½" C) CONDUIT WITH 10 #14 & 2 #14G (120V, CMS POWER)
17. INSTALL 10 #14 & 1 #14G (120V, CMS POWER) IN (E)1½" CONDUIT.
18. INTERCEPT (E)CONDUIT FROM CMS SIGNS AND EXTEND TO (N)PANEL-TB4.
19. SEE SHEETS E-24 TO E-26 FOR ELECTRICAL PANELBOARD SCHEDULES.
20. INSTALL TYPE 1 (1" C) CONDUIT WITH 4 #8 & 1 #10G (120/208V POWER)

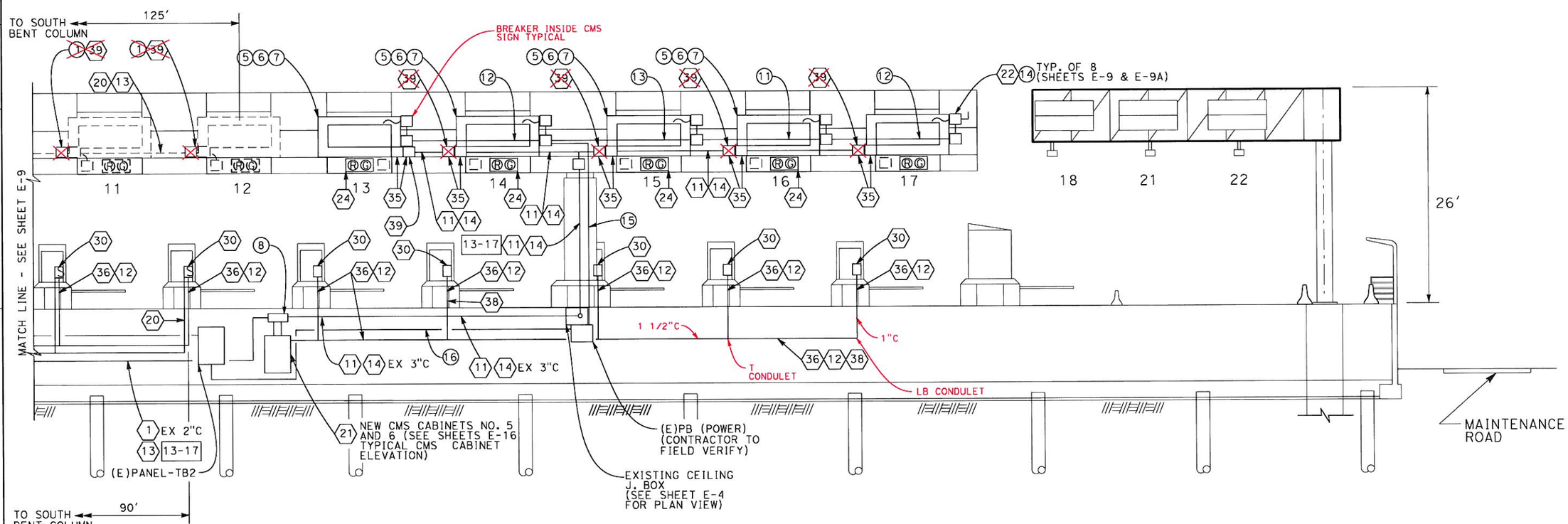

ELEVATION VIEW

TUNNEL TO CANOPY CONDUIT ROUTING (SHEET 2 OF 2)

NO SCALE

AS BUILT
CONTRACT No. OG420K BATA-004
C.C.A. DATE 6.18.2010
R.E. NAME BRUCE J. SHEWCHUK

THIS PLAN ACCURATE FOR ELECTRICAL WORK ONLY

E-9A

STATE OF CALIFORNIA - DEPARTMENT OF TRANSPORTATION
Caltrans
CONSULTANT FUNCTIONAL SUPERVISOR: LARRY JONES
CALCULATED-DESIGNED BY
CHECKED BY
REVISED BY
DATE REVISED

LAST REVISION 00-00-00
DATE PLOTTED => 8/30/2010
TIME PLOTTED => 7:55:18 AM

Dist	COUNTY	ROUTE	POST MILES TOTAL PROJECT	SHEET No.	TOTAL SHEETS
04	Ala	80	1.8/2.1	35	

REGISTERED CIVIL ENGINEER — DATE 6/10/09

PLANS APPROVAL DATE

REGISTERED PROFESSIONAL ENGINEER — RAMSEY J. HISSEN — No. C-39608 — Exp. 12/31/09 — CIVIL — STATE OF CALIFORNIA

THE STATE OF CALIFORNIA OR ITS OFFICERS OR AGENTS SHALL NOT BE RESPONSIBLE FOR THE ACCURACY OR COMPLETENESS OF SCANNED COPIES OF THIS PLAN SHEET.

BAY AREA TOLL AUTHORITY
101 EIGHTH STREET
OAKLAND, CA 94607

URS CORPORATION
55 SOUTH MARKET STREET
SUITE 1500
SAN JOSE, CA 95113-2332

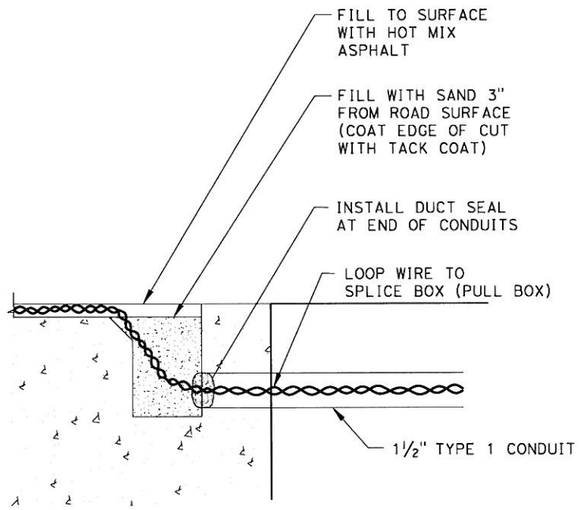

DETAIL B

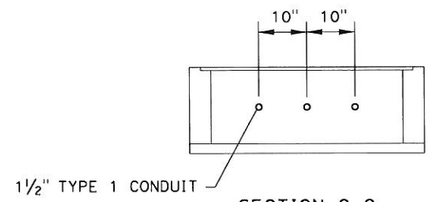

SECTION C-C

NOTES:

1. LANES 21 AND 22 LOOP WIRE TO TERMINATE TO EXISTING BELDEN 8720 CABLE IN LOOP WIRE SPLICE BOX. LANE 21 IN SPLICE BOX B AND LANE 22 IN SPLICE BOX C.
2. AFTER LOOP WIRE IS PULLED INTO LOOP SPLICE BOX CONDUIT, SEAL END WITH DUCT SEAL.
3. FILL EXCAVATED AREA WITH LOOP SEALANT MIX.
4. MAINTAIN MINIMUM 10" SPACING BETWEEN LOOP SPLICE BOX CONDUITS.
5. ALL UNUSED CONDUIT ENDS SHALL BE CAPPED TO PREVENT INTRUSION OF WATER, DIRT, ETC.

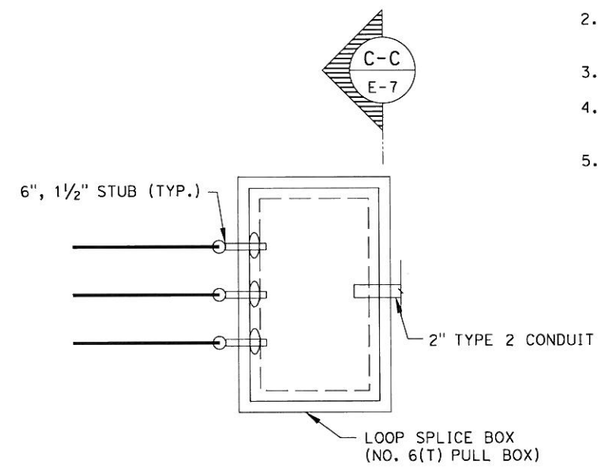

PLAN VIEW

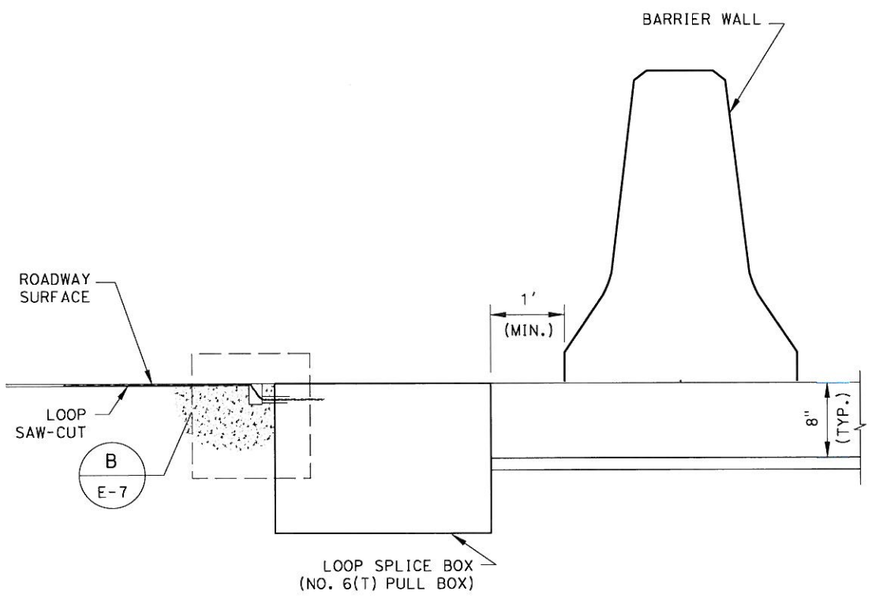

ELEVATION VIEW

AS BUILT
(NO CORRECTIONS ON THIS SHEET)
CONTRACT No. 0G420K, BATA-006
C.C.A. DATE 6.18.2010
R.E. NAME BRUCE J. SHEWCHUK

LOOP SPLICE BOX DETAILS

NO SCALE

E-10

THIS PLAN ACCURATE FOR ELECTRICAL WORK ONLY

STATE OF CALIFORNIA - DEPARTMENT OF TRANSPORTATION
Caltrans

CONSULTANT FUNCTIONAL SUPERVISOR: LARRY JONES

CALCULATED-DESIGNED BY | CHECKED BY

REVISED BY | DATE REVISED

LAST REVISION 00-00-00 | DATE PLOTTED => 8/30/2010 | TIME PLOTTED => 7:55:28 AM

Dist	COUNTY	ROUTE	POST MILES TOTAL PROJECT	SHEET No.	TOTAL SHEETS
04	Ala	80	1.8/2.1	36	

REGISTERED CIVIL ENGINEER — DATE 6/10/09

PLANS APPROVAL DATE

REGISTERED PROFESSIONAL ENGINEER — RAMSEY J. HISSEN — No. C-39608 — Exp. 12/31/09 — CIVIL — STATE OF CALIFORNIA

THE STATE OF CALIFORNIA OR ITS OFFICERS OR AGENTS SHALL NOT BE RESPONSIBLE FOR THE ACCURACY OR COMPLETENESS OF SCANNED COPIES OF THIS PLAN SHEET.

BAY AREA TOLL AUTHORITY
101 EIGHTH STREET
OAKLAND, CA 94607

URS CORPORATION
55 SOUTH MARKET STREET
SUITE 1500
SAN JOSE, CA 95113-2332

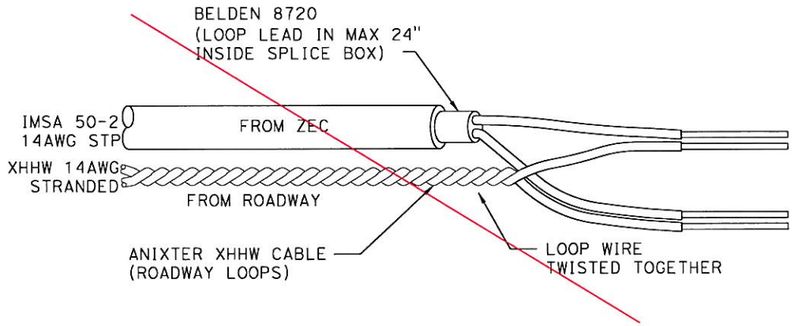

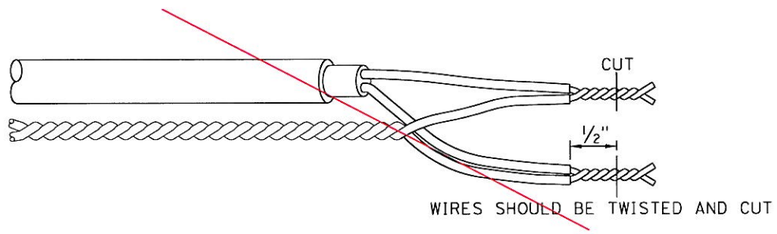

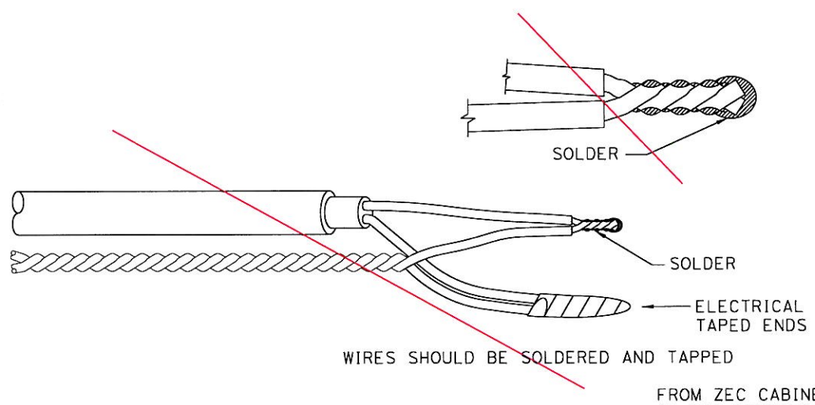

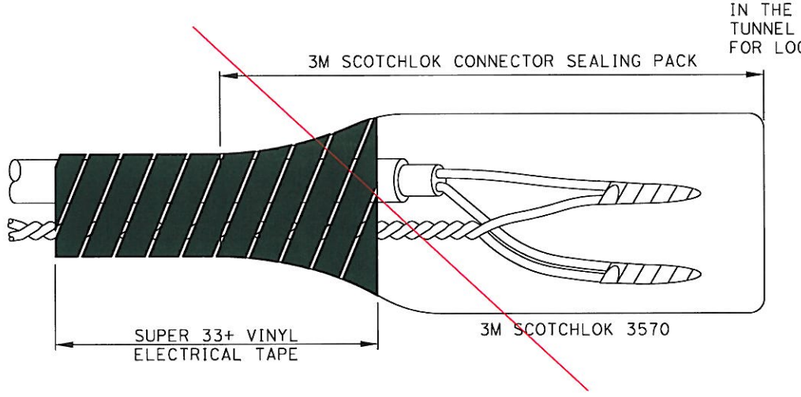

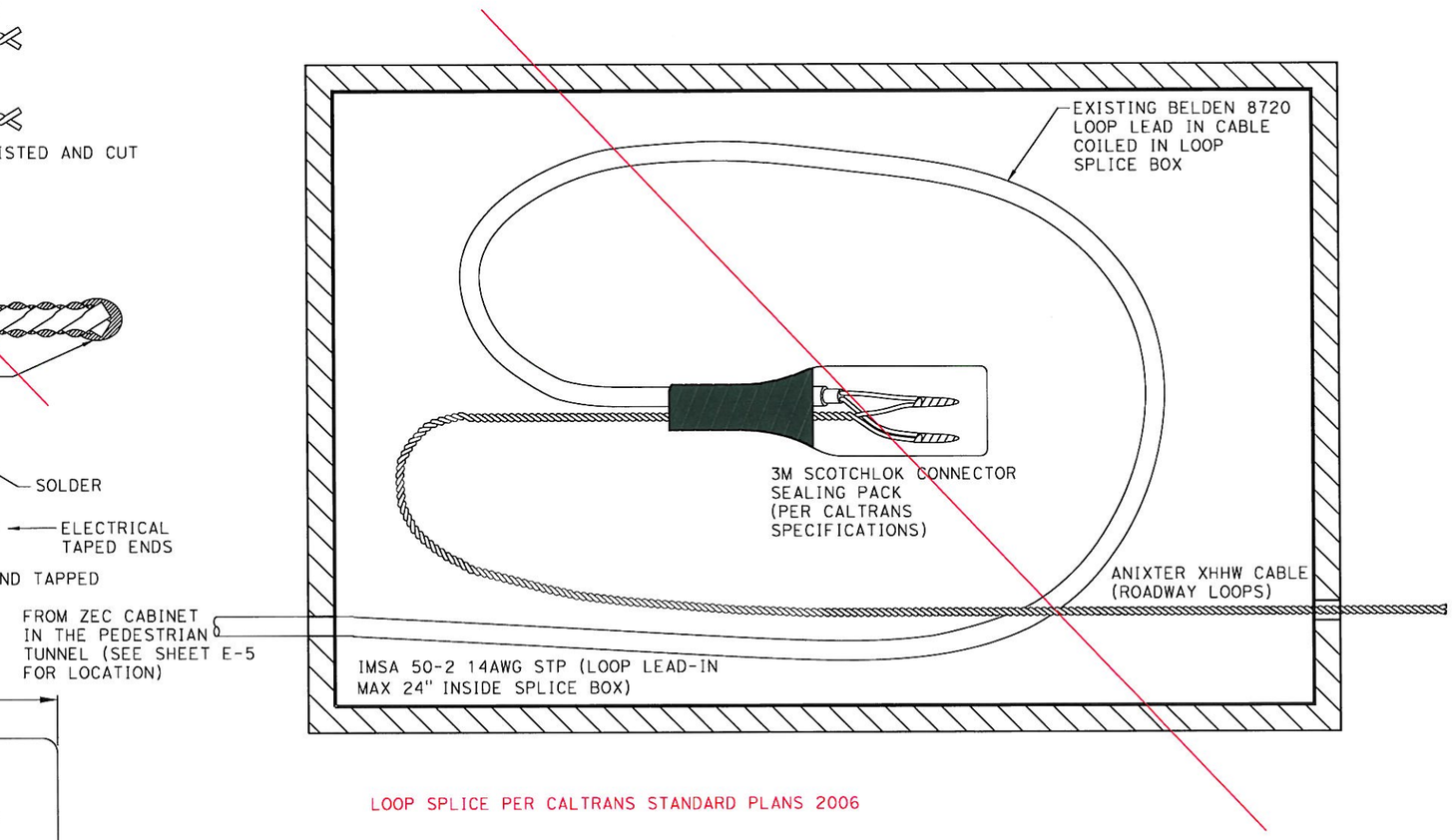

LOOP SPLICE PER CALTRANS STANDARD PLANS 2006

LOOP SPLICE DETAILS

NO SCALE

AS BUILT
CONTRACT No. 0G420K BASA-006
C.C.A. DATE 6.18.2010
R.E. NAME BRUCE J. SHENCKLE

E-11

THIS PLAN ACCURATE FOR ELECTRICAL WORK ONLY

STATE OF CALIFORNIA - DEPARTMENT OF TRANSPORTATION — Caltrans

CONSULTANT FUNCTIONAL SUPERVISOR: LARRY JONES

CALCULATED-DESIGNED BY | CHECKED BY | REVISED BY | DATE REVISED

LAST REVISION 00-00-00 | DATE PLOTTED => 8/30/2010 | TIME PLOTTED => 7:55:36 AM

BORDER LAST REVISED 4/11/2008 | RELATIVE BORDER SCALE IS IN INCHES 0 1 2 3 | USERNAME=> jason_vincent | DGN FILE=> I:\Projects\28645026\its\ORT\AS-BUILTS\E-11_new.dgn | CU 00000 | EA 0G420K

Dist	COUNTY	ROUTE	POST MILES TOTAL PROJECT	SHEET No.	TOTAL SHEETS
04	Ala	80	1.8/2.1	37	

REGISTERED CIVIL ENGINEER 6/10/09 DATE

PLANS APPROVAL DATE

REGISTERED PROFESSIONAL ENGINEER RAMSEY J. HISSEN No. C-39608 Exp. 12/31/09 CIVIL STATE OF CALIFORNIA

THE STATE OF CALIFORNIA OR ITS OFFICERS OR AGENTS SHALL NOT BE RESPONSIBLE FOR THE ACCURACY OR COMPLETENESS OF SCANNED COPIES OF THIS PLAN SHEET.

BAY AREA TOLL AUTHORITY
101 EIGHTH STREET
OAKLAND, CA 94607

URS CORPORATION
55 SOUTH MARKET STREET
SUITE 1500
SAN JOSE, CA 95113-2332

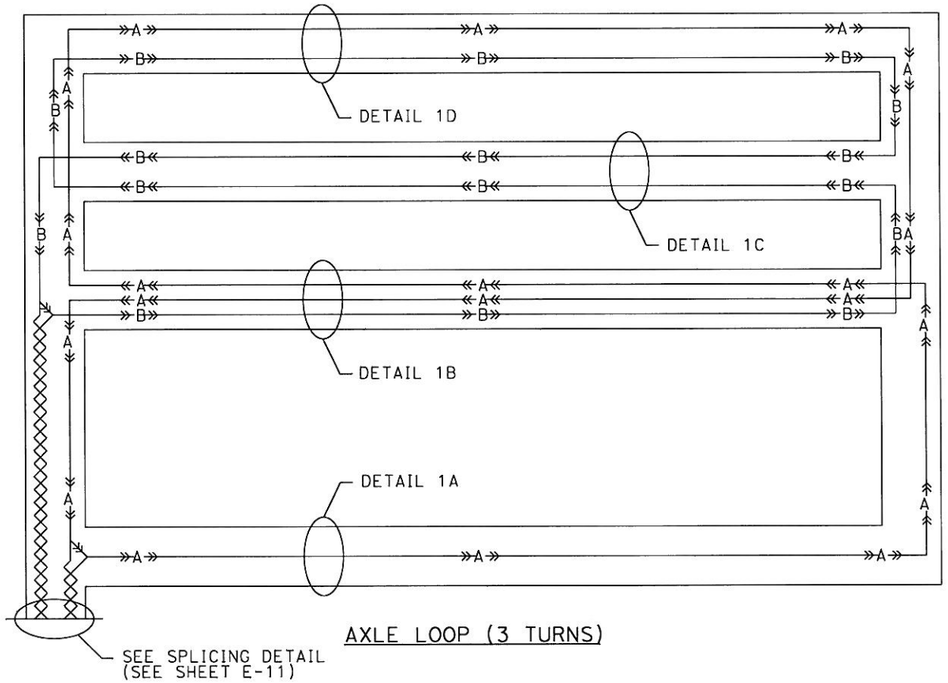

AXLE LOOP (3 TURNS)

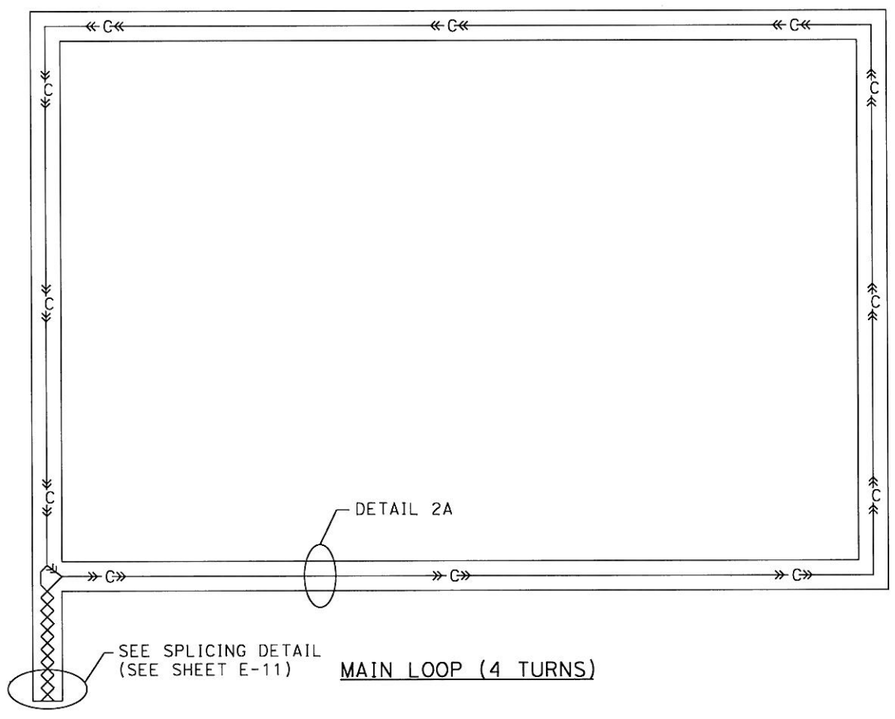

MAIN LOOP (4 TURNS)

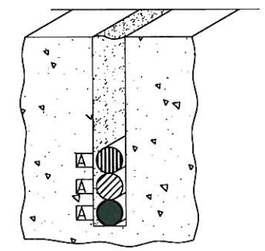

DETAIL 1A
1¼" DEEP CUT

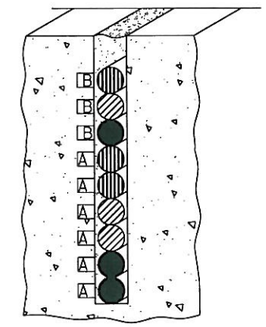

DETAIL 1B
1¾" DEEP CUT

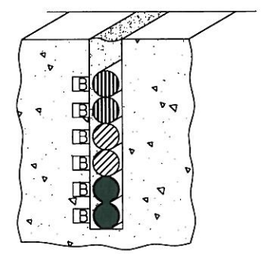

DETAIL 1C
1½" DEEP CUT

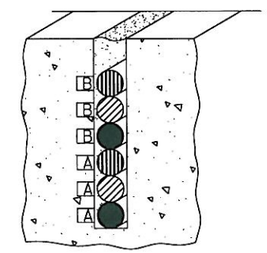

DETAIL 1D
1½" DEEP CUT

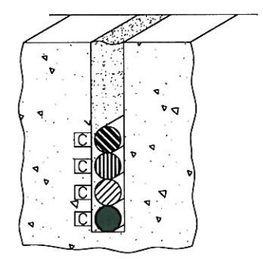

DETAIL 2A
1¼" DEEP CUT

X	- FOURTH TURN OF LOOP
X	- THIRD TURN OF LOOP
X	- SECOND TURN OF LOOP
X	- FIRST TURN OF LOOP

LOOP WIRE WRAPPING

AS BUILT
(NO CORRECTIONS ON THIS SHEET)
CONTRACT No. 0G420K, BATA 00,
C.C.A. DATE 6.18.2010
R.E. NAME BRUCE J. STEWCHUK

LOOP WRAPPING DETAILS

NO SCALE

THIS PLAN ACCURATE FOR ELECTRICAL WORK ONLY

E-12

STATE OF CALIFORNIA - DEPARTMENT OF TRANSPORTATION
Caltrans
CONSULTANT FUNCTIONAL SUPERVISOR: LARRY JONES
CALCULATED-DESIGNED BY
CHECKED BY
REVISED BY
DATE REVISED

LAST REVISION 00-00-00
DATE PLOTTED => 8/30/2010
TIME PLOTTED => 7:55:46 AM

BORDER LAST REVISED 4/11/2008
RELATIVE BORDER SCALE IS IN INCHES 0 1 2 3
USERNAME=> jason_vincent
DGN FILE=> i:\Projects\28645026\its\ORT\AS-BUILTS\E-12_new.dgn
CU 00000
EA 0G420K

Dist	COUNTY	ROUTE	POST MILES TOTAL PROJECT	SHEET No.	TOTAL SHEETS
04	Ala	80	1.8/2.1	38	

REGISTERED CIVIL ENGINEER — DATE 6/10/09

PLANS APPROVAL DATE

REGISTERED PROFESSIONAL ENGINEER — RAMSEY J. HISSEN — No. C-39608 — Exp. 12/31/09 — CIVIL — STATE OF CALIFORNIA

THE STATE OF CALIFORNIA OR ITS OFFICERS OR AGENTS SHALL NOT BE RESPONSIBLE FOR THE ACCURACY OR COMPLETENESS OF SCANNED COPIES OF THIS PLAN SHEET.

BAY AREA TOLL AUTHORITY
101 EIGHTH STREET
OAKLAND, CA 94607

URS CORPORATION
55 SOUTH MARKET STREET
SUITE 1500
SAN JOSE, CA 95113-2332

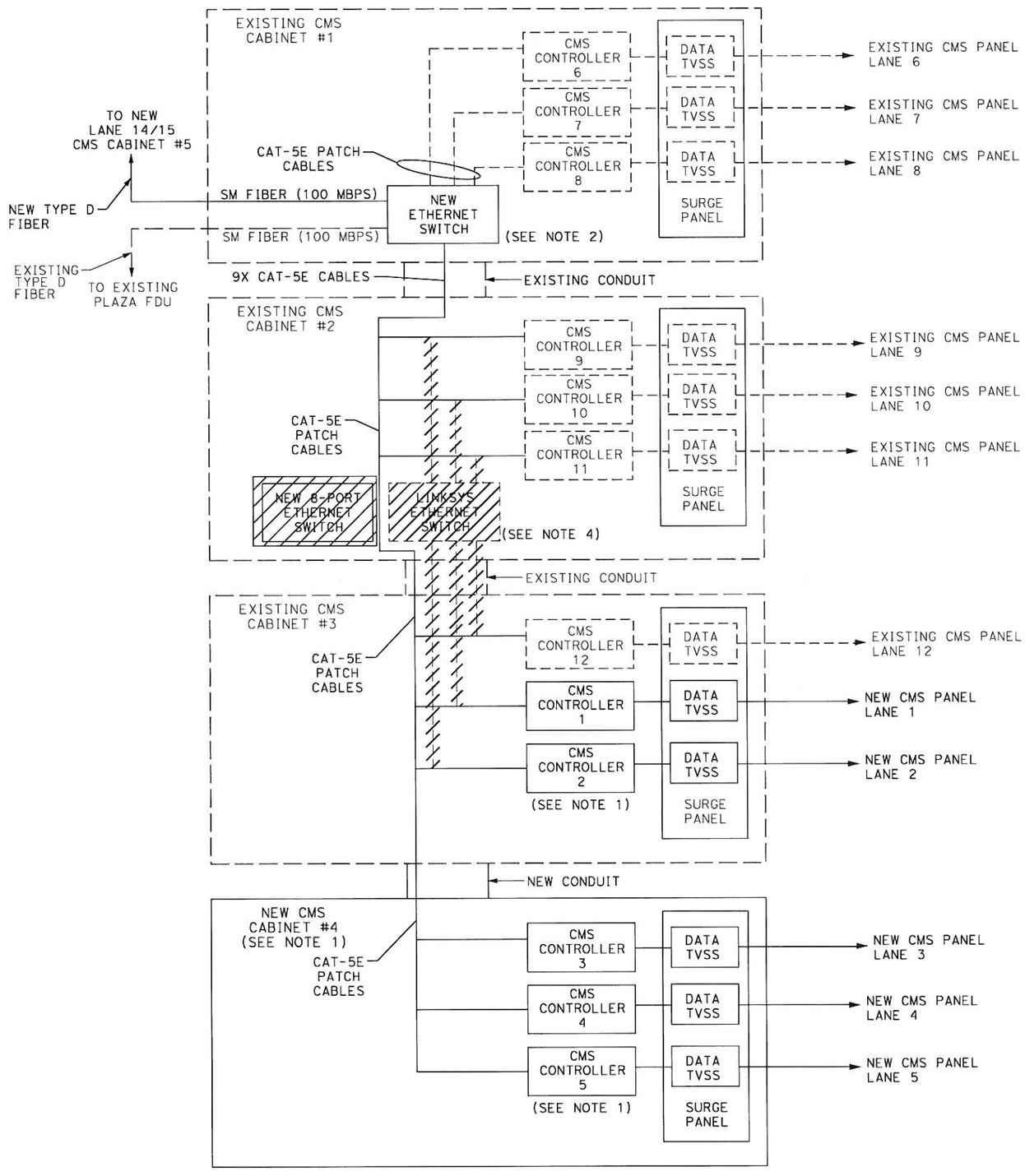

THIS PLAN ACCURATE FOR ELECTRICAL WORK ONLY

NOTES:

1. LANE 1 AND 2 CMS CONTROLLERS SHALL BE INSTALLED IN EXISTING CMS PLAZA CABINET #3 AND LANE 3, 4 AND 5 CMS CONTROLLER SHALL BE INSTALLED IN NEW CMS PLAZA CABINET #4 AS SHOWN ON PLANS.
2. REPLACE EXISTING GARRETCOM ETHERNET SWITCH IN CMS PLAZA CABINET #1 WITH NEW SWITCH (SAME MANUFACTURER) WITH MINIMUM 14 10/100 MBPS PORTS AND 2 FIBER 100 MBPS PORTS. OLD SWITCH SHALL BE RETURNED TO BATA FOR USE AS A SPARE SWITCH.
3. ALL ETHERNET SWITCHES SHALL BE RACK MOUNTED (NO SHELVES) AND LOCATED IN CMS CABINET AS SHOWN IN CMS CABINET ELEVATION VIEW (SHEET E-14 AND E-16).
4. REMOVE AND SALVAGE EXISTING LINKSYS ETHERNET SWITCH IN CMS PLAZA CABINET #2 AND RETURN TO BATA. RELOCATE EXISTING GARRETCOM ETHERNET SWITCH IN CMS CABINET #1 TO NEW CMS CABINET #5 (LANE 14/15). RACK EARS SHALL BE PROVIDED TO RACK MOUNT SWITCH.
5. ALL CABLING IN CMS CABINETS SHALL BE INSTALLED AND NEATLY DRESSED AND SECURED IN CABINETS. SPARE COILED CABLING SHALL BE PROVIDED IN JUNCTION BOXES.
6. CONTRACTOR TO REMOVE AND SALVAGE EXISTING UNUSED TVSS AND INSTALL AND CONNECT NEW TVSS BETWEEN ALL CMS CONTROLLERS AND CMS PANELS.
7. SEE SHEETS E-4 AND E-5 FOR CMS CABINET LOCATIONS.

LEGEND

TO BE REMOVED

AS BUILT
(NO CORRECTIONS ON THIS SHEET)
CONTRACT No. 06420K BATA: 006
C.C.A. DATE 6.18.2010
R.E. NAME BRUCE J. STRUCKMUK

LANES 1-12 CMS SYSTEM SCHEMATIC

NO SCALE

E-13

STATE OF CALIFORNIA - DEPARTMENT OF TRANSPORTATION
Caltrans
CONSULTANT FUNCTIONAL SUPERVISOR: LARRY JONES
CALCULATED-DESIGNED BY
CHECKED BY
REVISED BY
DATE REVISED

LAST REVISION 00-00-00 — DATE PLOTTED => 8/30/2010 — TIME PLOTTED => 7:55:54 AM

BORDER LAST REVISED 4/11/2008 — RELATIVE BORDER SCALE IS IN INCHES 0 1 2 3 — USERNAME=> jason_vincent — DGN FILE=> I:\Projects\28645026\its\ORT\AS-BUILTS\E-13_new.dgn — CU 00000 — EA 06420K

ITEM	COMPONENT
1	INSTALL NEW CMS CONTROLLER.
2	REMOVE EXISTING ETHERNET SWITCH AT CABINET BOTTOM. FURNISH AND INSTALL NEW GARRETTCOM 6K25 WITH 14-10/100BASE-T AND 2-100BASE-FX(SM) PORTS. FIBER PORT TO MATCH EXISTING. INSTALL NEW SWITCH RIGHT UNDER CMS CONTROLLER (RACK MOUNTED-NO SHELVES.
3	EXISTING PLAZA F.O. PATCH PANEL. ADD 12 POSITION CONNECTOR PANEL TO ACCOMODATE NEW FIBER.
4	CONNECT ALL CABINET EQUIPMENT TO EXISTING POWER STRIP.
5	EXISTING UPS RELOCATED TO PED TUNNEL (CMS CABINET #7)
6	ELECTRICAL PANEL

ITEM	COMPONENT
7	EXISTING DATA TVSS TO BE REPLACED WITH 3 NEW TVSS OF SAME TYPE AND RECONNECT EXISTING CMS COMMUNICATIONS CABLE THROUGH NEW TVSS.
8	15 AMP OUTLET
9	REMOVE EXISTING TRANSFORMERS AND REPLACE WITH ONE (1)NEW 120V,100W, 1:1, TYPE 3 TRANSFORMER.
10	REMOVE EXISTING 1/4 AMP BREAKERS AND REPLACE WITH 3 NEW 1/4 AMP BREAKERS.
11	EXISTING POWER STRIP AT THE BOTTOM OF THE CABINET TO BE REMOVED.
12	EXISTING LINKSYS SWITCH AT THE BOTTOM OF THE CABINET TO BE REMOVED.
13	3 NEW DATA TVSS TO BE CONNECTED BETWEEN CMS CONTROLLER AND CMS PANELS.
14	MOVE EXISTING EQUIPMENT DOWN ONE RACK UNIT.
15	NEW POWER STRIP
16	ONE (1) NEW 3/4 AMP BREAKER (120 VAC)

ITEM	COMPONENT
17	ONE (1) NEW CLASS 3, 100 WATT 1:1, 120 VAC TRANSFORMER
18	THREE (3) NEW 1/4 AMP BREAKERS (120 VAC)
19	ARRANGE ELECTRICAL PANEL ON CMS CABINETS 1, 2, AND 3 AS SHOWN ON CABINET 4.
~~20~~	~~CONTRACTOR TO REMOVE LB FITTING AND INSTALL NEW 3" CONDUIT FROM CABINET #3 TO CABINET #4.~~
21	INSTALL NEW TERMINAL BLOCKS FOR TERMINATION OF INDICATOR LIGHT CABLES.

NOTES:

1. EQUIPMENT TO MEET CALTRANS TEES REQUIREMENTS.
2. REMOVED EQUIPMENT AND MATERIALS SHALL BE RETURNED TO BATA.
3. INSTALL NEW F.O. PATCH (CONNECTOR) PANEL NEXT TO EXISTING F.O. PATCH PANEL.
4. ALL EQUIPMENT SHALL BE SECURED. NO EQUIPMENT WILL BE LAYING IN BOTTOM OF CABINET. INSTALLATION SHALL BE NEAT, DRESSED AND ACCORDING TO THE PLANS.
5. CONTRACTOR SHALL SUBMIT MATERIAL SUBMITTALS FOR ALL CABINET COMPONENTS TO THE ENGINEER FOR REVIEW AND APPROVAL PRIOR TO PROCUREMENT AND INSTALLATION.

Dist	COUNTY	ROUTE	POST MILES TOTAL PROJECT	SHEET No.	TOTAL SHEETS
04	Ala	80	1.8/2.1	39	

REGISTERED CIVIL ENGINEER — DATE 6/10/09

PLANS APPROVAL DATE

REGISTERED PROFESSIONAL ENGINEER — RAMSEY J. HISSEN — No. C-39608 — Exp. 12/31/09 — CIVIL — STATE OF CALIFORNIA

THE STATE OF CALIFORNIA OR ITS OFFICERS OR AGENTS SHALL NOT BE RESPONSIBLE FOR THE ACCURACY OR COMPLETENESS OF SCANNED COPIES OF THIS PLAN SHEET.

BAY AREA TOLL AUTHORITY
101 EIGHTH STREET
OAKLAND, CA 94607

URS CORPORATION
55 SOUTH MARKET STREET
SUITE 1500
SAN JOSE, CA 95113-2332

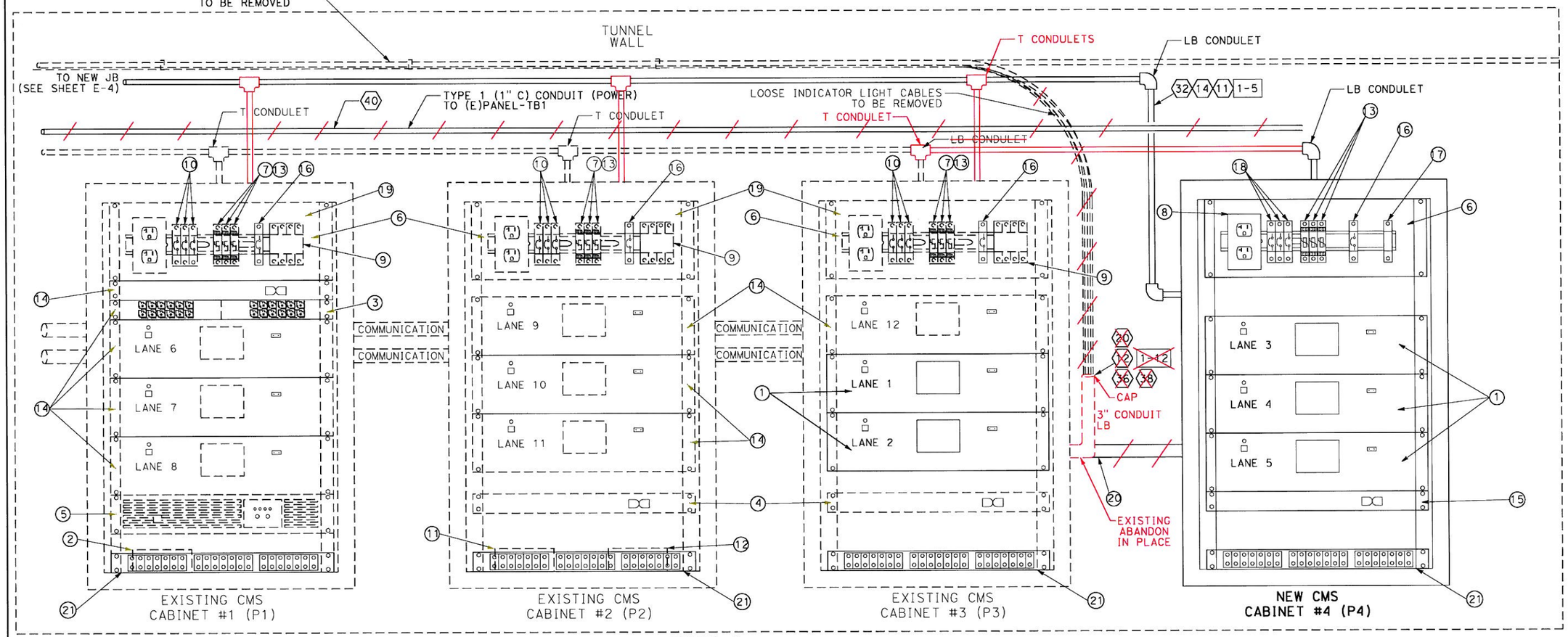

DETAIL A
LANES 1-12 CMS CABINET ELEVATION
(SEE SHEET E-4 FOR CMS CABINET LOCATIONS)

AS BUILT
CONTRACT NO. 0G420K, BATA-004
C.C.A. DATE 6.18.2010
R.E. NAME BRUCE J. GHEWCHAK

LANES 1-12 CMS CABINETS ELEVATION VIEW

NO SCALE

E-14

THIS PLAN ACCURATE FOR ELECTRICAL WORK ONLY

STATE OF CALIFORNIA - DEPARTMENT OF TRANSPORTATION
Caltrans
CONSULTANT FUNCTIONAL SUPERVISOR: LARRY JONES
CALCULATED-DESIGNED BY
CHECKED BY
REVISED BY
DATE REVISED

LAST REVISION 00-00-00
DATE PLOTTED => 8/30/2010
TIME PLOTTED => 8:17:51 AM

BORDER LAST REVISED 4/11/2008
RELATIVE BORDER SCALE IS IN INCHES 0 1 2 3
USERNAME=> jason_vincent
DGN FILE=> I:\Projects\28645026\its\ORT\AS-BUILTS\E-14_new.dgn
CU 00000
EA 0G420K

Dist	COUNTY	ROUTE	POST MILES TOTAL PROJECT	SHEET No.	TOTAL SHEETS
04	Ala	80	1.8/2.1	40	

REGISTERED CIVIL ENGINEER — DATE 6/10/09

PLANS APPROVAL DATE

REGISTERED PROFESSIONAL ENGINEER RAMSEY J. HISSEN No. C-39608 Exp. 12/31/09 CIVIL STATE OF CALIFORNIA

THE STATE OF CALIFORNIA OR ITS OFFICERS OR AGENTS SHALL NOT BE RESPONSIBLE FOR THE ACCURACY OR COMPLETENESS OF SCANNED COPIES OF THIS PLAN SHEET.

BAY AREA TOLL AUTHORITY
101 EIGHTH STREET
OAKLAND, CA 94607

URS CORPORATION
55 SOUTH MARKET STREET
SUITE 1500
SAN JOSE, CA 95113-2332

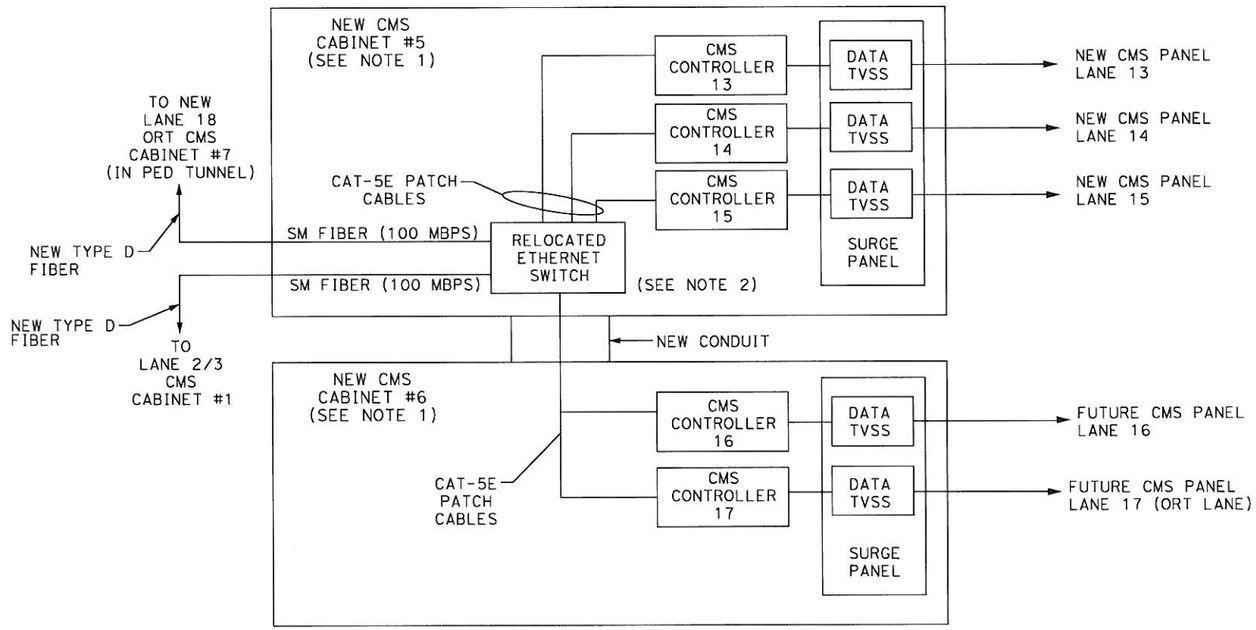

NOTES:

1. LANES 13, 14 AND 15 CMS CONTROLLERS SHALL BE INSTALLED IN CMS CABINET #5 AND LANES 16 AND 17 CMS CONTROLLERS SHALL BE INSTALLED IN CMS CABINET #6. CMS PANELS FOR LANES 16 AND 17 WILL BE INSTALLED BY OTHERS.
2. GARRETCOM ETHERNET SWITCH LOCATED IN CMS CABINET #1 (LANE 2/3) SHALL BE RELOCATED TO CMS CABINET #5.
3. ALL CABLING IN CMS CABINETS SHALL BE INSTALLED AND NEATLY DRESSED AND SECURED IN CABINETS. SPARE COILED CABLING SHALL BE PROVIDED IN JUNCTION BOXES.
4. CONTRACTOR TO INSTALL, CONNECT, AND INTEGRATE ALL EQUIPMENT IN CMS CABINETS (I.E., TVSS, TRANSFORMERS, BREAKERS, ETC.)

AS BUILT
(NO CORRECTIONS ON THIS SHEET)
CONTRACT No. OG420K, EA 0A7A-006
C.C.A. DATE 6.18.2010
R.E. NAME BRUCE J. SHEWCHUK

LANES 13-17 CMS SYSTEM SCHEMATIC

NO SCALE

THIS PLAN ACCURATE FOR ELECTRICAL WORK ONLY

E-15

REVISED BY | DATE REVISED

CALCULATED-DESIGNED BY | CHECKED BY

CONSULTANT FUNCTIONAL SUPERVISOR: LARRY JONES

STATE OF CALIFORNIA - DEPARTMENT OF TRANSPORTATION

Caltrans

LAST REVISION 00-00-00 | DATE PLOTTED => 8/30/2010 | TIME PLOTTED => 7:56:13 AM

Dist	COUNTY	ROUTE	POST MILES TOTAL PROJECT	SHEET No.	TOTAL SHEETS
04	Ala	80	1.8/2.1	41	

REGISTERED CIVIL ENGINEER — DATE 6/10/09

PLANS APPROVAL DATE

REGISTERED PROFESSIONAL ENGINEER — RAMSEY J. HISSEN — No. C-39608 — Exp. 12/31/09 — CIVIL — STATE OF CALIFORNIA

THE STATE OF CALIFORNIA OR ITS OFFICERS OR AGENTS SHALL NOT BE RESPONSIBLE FOR THE ACCURACY OR COMPLETENESS OF SCANNED COPIES OF THIS PLAN SHEET.

BAY AREA TOLL AUTHORITY
101 EIGHTH STREET
OAKLAND, CA 94607

URS CORPORATION
55 SOUTH MARKET STREET
SUITE 1500
SAN JOSE, CA 95113-2332

ITEM	COMPONENT
1	NEW CMS CONTROLLER
2	NEW GARRETTCOM ETHERNET SWITCH (RACK MOUNTED)
3	NEW 12-PORT FIBER PATCH (CONNECTOR) PANEL (X2)
4	NEW POWER STRIP
5	TYPE 1 CONDUIT (2-INCH)
6	ELECTRICAL PANEL

ITEM	COMPONENT
7	THREE (3) NEW DATA TVSS
8	15 AMP GFI OUTLET
9	ONE (1) NEW 3/4 AMP BREAKER (120 VAC)
10	ONE (1) NEW CLASS 3, 100 WATT 1:1, 120 VAC TRANSFORMER
11	THREE (3) NEW 1/4 AMP BREAKERS (120 VAC)
12	INSTALL NEW TERMINAL BLOCKS FOR TERMINATION OF INDICATOR LIGHT CABLES

ITEM	COMPONENT
13	TWO NEW DATA TVSS
14	TWO NEW 1/4 AMP BREAKERS (120 VAC)

NOTE: CABINET AND EQUIPMENT TO MEET CALTRANS TEES REQUIREMENTS

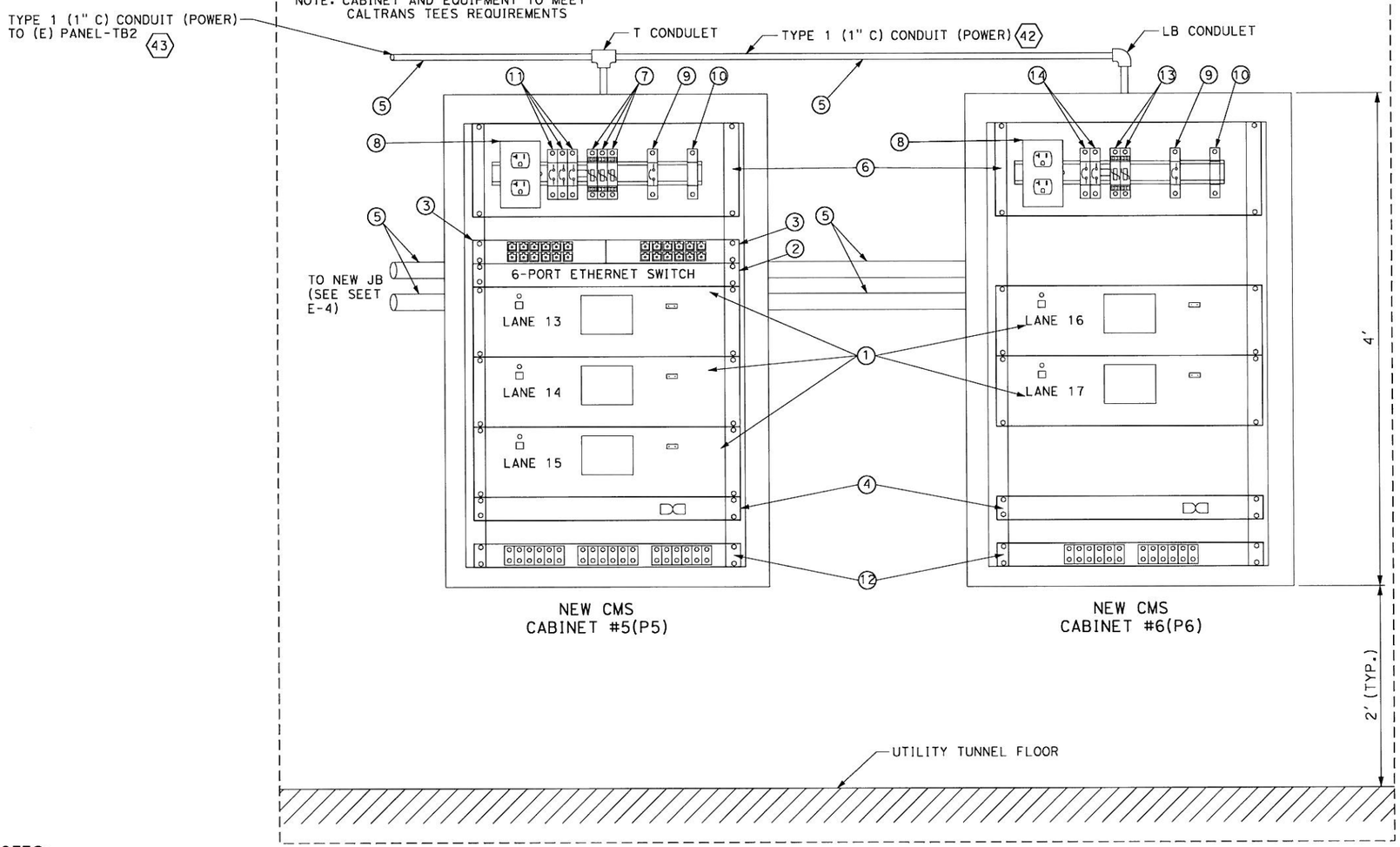

DETAIL A
LANES 13-17 CMS CABINET ELEVATION
SEE SHEET E-4 FOR CMS CABINET LOCATIONS

NOTES:

1. INSTALL WEATHERPROOF LB FITTING OR CONDULET INTO CABINET.
2. ALL CABINET EQUIPMENT AND CONDUIT LOCATIONS SHOWN ON PLANS AND DETAILS ARE APPROXIMATE. FINAL LOCATION OF ALL EQUIPMENT AND MATERIALS SHALL BE AS DIRECTED AND APPROVED BY THE ENGINEER.
3. PLAZA CABINET MOUNTED TO A CONCRETE WALL SHALL BE ATTACHED TO THE WALL USING 3/8" DIAMETER EXPANSION ANCHORS, TOTAL 4 PER CABINET ATTACHED TO THE CONCRETE WALL. CONTRACTOR MAY PROPOSE AN ALTERNATIVE MOUNTING METHOD (I.E., MOUNTING RAILS) FOR APPROVAL BY ENGINEER.
4. CONTRACTOR TO CONNECT TVSS.
5. CMS PANELS FOR LANES 16 AND 17 TO BE PROVIDED BY OTHERS.

AS BUILT
(NO CORRECTIONS ON THIS SHEET)
CONTRACT No. 0G420K BATA-004
C.C.A. DATE 6.18.2010
R.E. NAME BRUCE J. SHERWCHUK

LANES 13-17 CMS CABINETS ELEVATION VIEW

NO SCALE

THIS PLAN ACCURATE FOR ELECTRICAL WORK ONLY

E-16

REVISED BY | DATE REVISED
CALCULATED-DESIGNED BY | CHECKED BY
CONSULTANT FUNCTIONAL SUPERVISOR: LARRY JONES
STATE OF CALIFORNIA - DEPARTMENT OF TRANSPORTATION — Caltrans

LAST REVISION 00-00-00 | DATE PLOTTED => 8/30/2010 | TIME PLOTTED => 8:28:29 AM

BORDER LAST REVISED 4/11/2008 | RELATIVE BORDER SCALE IS IN INCHES 0 1 2 3 | USERNAME=> jason_vincent | DGN FILE=> I:\Projects\28645026\its\ORT\AS-BUILTS\E-16_new.dgn | CU 00000 | EA 0G420K

Dist	COUNTY	ROUTE	POST MILES TOTAL PROJECT	SHEET No.	TOTAL SHEETS
04	Ala	80	1.8/2.1	42	

REGISTERED CIVIL ENGINEER 6/10/09 DATE

PLANS APPROVAL DATE

REGISTERED PROFESSIONAL ENGINEER RAMSEY J. HISSEN No. C-39608 Exp. 12/31/09 CIVIL STATE OF CALIFORNIA

THE STATE OF CALIFORNIA OR ITS OFFICERS OR AGENTS SHALL NOT BE RESPONSIBLE FOR THE ACCURACY OR COMPLETENESS OF SCANNED COPIES OF THIS PLAN SHEET.

BAY AREA TOLL AUTHORITY
101 EIGHTH STREET
OAKLAND, CA 94607

URS CORPORATION
55 SOUTH MARKET STREET
SUITE 1500
SAN JOSE, CA 95113-2332

ABBREVIATIONS

FO= FIBER OPTIC

TVSS= TRANSIENT VOLTAGE SURGE SUPPRESSOR

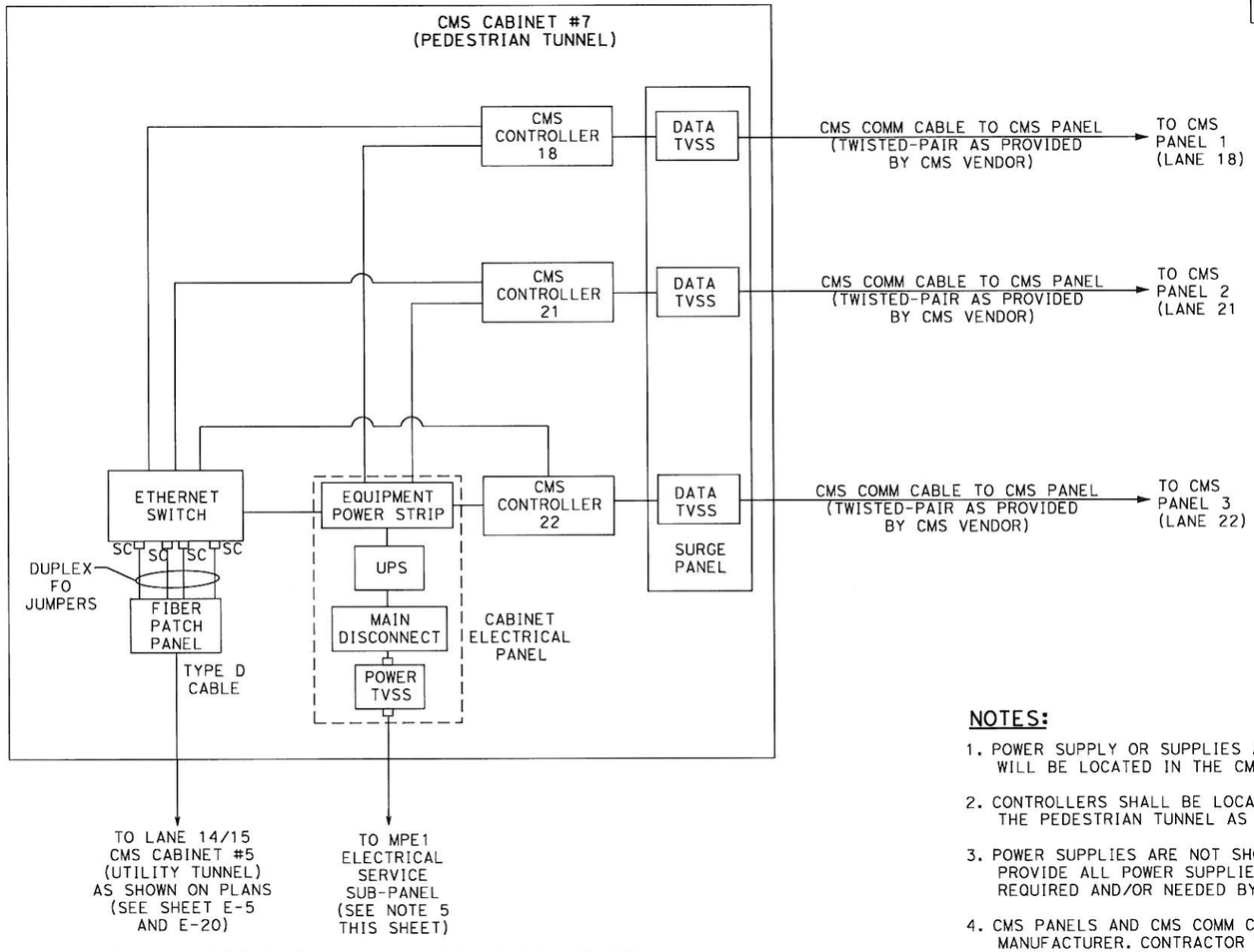

DETAIL A: ORT CMS CABINET WIRING SCHEMATIC

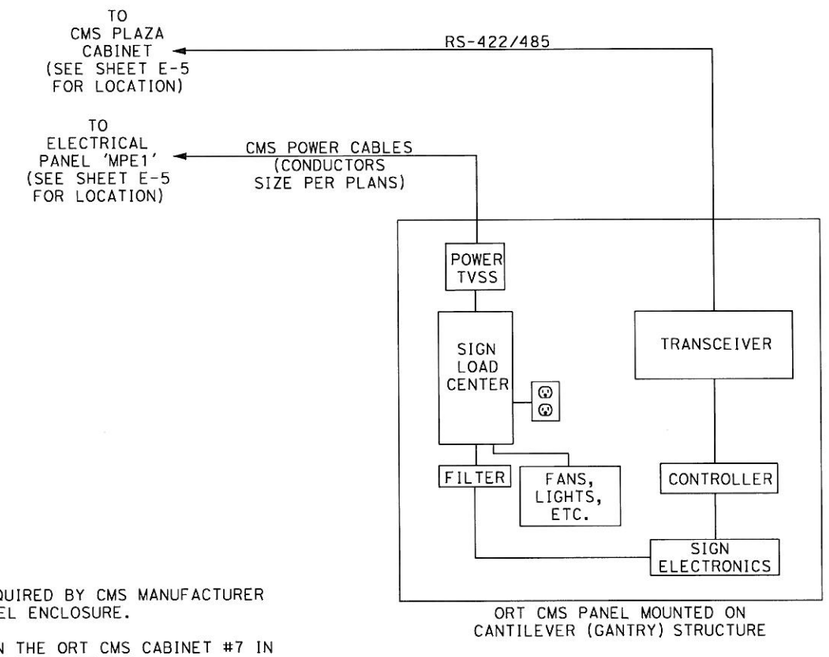

ORT CMS PANEL MOUNTED ON CANTILEVER (GANTRY) STRUCTURE

DETAIL B: TYPICAL CMS PANEL

NOTES:

1. POWER SUPPLY OR SUPPLIES AS REQUIRED BY CMS MANUFACTURER WILL BE LOCATED IN THE CMS PANEL ENCLOSURE.
2. CONTROLLERS SHALL BE LOCATED IN THE ORT CMS CABINET #7 IN THE PEDESTRIAN TUNNEL AS SHOWN ON SHEET E-5.
3. POWER SUPPLIES ARE NOT SHOWN FOR CLARITY. CONTRACTOR TO PROVIDE ALL POWER SUPPLIES AND ANCILLARY MATERIALS AS REQUIRED AND/OR NEEDED BY EQUIPMENT.
4. CMS PANELS AND CMS COMM CABLES TO BE PROVIDED BY CMS MANUFACTURER. CONTRACTOR TO COORDINATE WITH THE ENGINEER AND CMS MANUFACTURER.
5. MPE1 ELECTRICAL PANEL (SEE SHEET E-24)
   CIRCUIT 1: CMS PANEL LANE 18
   CIRCUIT 3: CMS PANEL LANE 21
   CIRCUIT 5: CMS PANEL LANE 22
   CIRCUIT 7: CMS CABINET

AS BUILT
(NO CORRECTIONS ON THIS SHEET)
CONTRACT No. 0G420K, BATA-00
C.C.A. DATE 6.18.2010
R.E. NAME BRUCE J. GHEWALUK

ORT LANE 18, 21 & 22 CMS SYSTEM SCHEMATIC

NO SCALE

E-17

THIS PLAN ACCURATE FOR ELECTRICAL WORK ONLY

REVISED BY | DATE REVISED

CALCULATED-DESIGNED BY | CHECKED BY

CONSULTANT FUNCTIONAL SUPERVISOR: LARRY JONES

STATE OF CALIFORNIA - DEPARTMENT OF TRANSPORTATION

Caltrans

LAST REVISION 00-00-00 | DATE PLOTTED => 8/30/2010 | TIME PLOTTED => 7:56:29 AM

BORDER LAST REVISED 4/11/2008 | RELATIVE BORDER SCALE IS IN INCHES 0 1 2 3 | USERNAME=> jason_vincent | DGN FILE=> i:\Projects\28645026\its\ORT\AS-BUILTS\E-17_new.dgn | CU 00000 | EA 0G420K

Dist	COUNTY	ROUTE	POST MILES TOTAL PROJECT	SHEET No.	TOTAL SHEETS
04	Ala	80	1.8/2.1	43	

REGISTERED CIVIL ENGINEER 6/10/09 DATE

PLANS APPROVAL DATE

REGISTERED PROFESSIONAL ENGINEER RAMSEY J. HISSEN No. C-39608 Exp. 12/31/09 CIVIL STATE OF CALIFORNIA

THE STATE OF CALIFORNIA OR ITS OFFICERS OR AGENTS SHALL NOT BE RESPONSIBLE FOR THE ACCURACY OR COMPLETENESS OF SCANNED COPIES OF THIS PLAN SHEET.

BAY AREA TOLL AUTHORITY
101 EIGHTH STREET
OAKLAND, CA 94607

URS CORPORATION
55 SOUTH MARKET STREET
SUITE 1500
SAN JOSE, CA 95113-2332

ITEM	COMPONENT
1	NEW CMS CONTROLLER
2	NEW GARRETTCOM ETHERNET SWITCH
3	NEW FIBER PATCH PANEL
4	NEW POWER STRIP
5	TYPE 1 CONDUIT (2-INCH)
6	ELECTRICAL PANEL

ITEM	COMPONENT
7	3 NEW DATA TVSS
8	15 AMP GFI OUTLET
9	UPS (RELOCATED FROM CMS CABINET #1 IN UTILITY TUNNEL)

NOTE: CABINET AND EQUIPMENT TO MEET CALTRANS TEES REQUIREMENTS

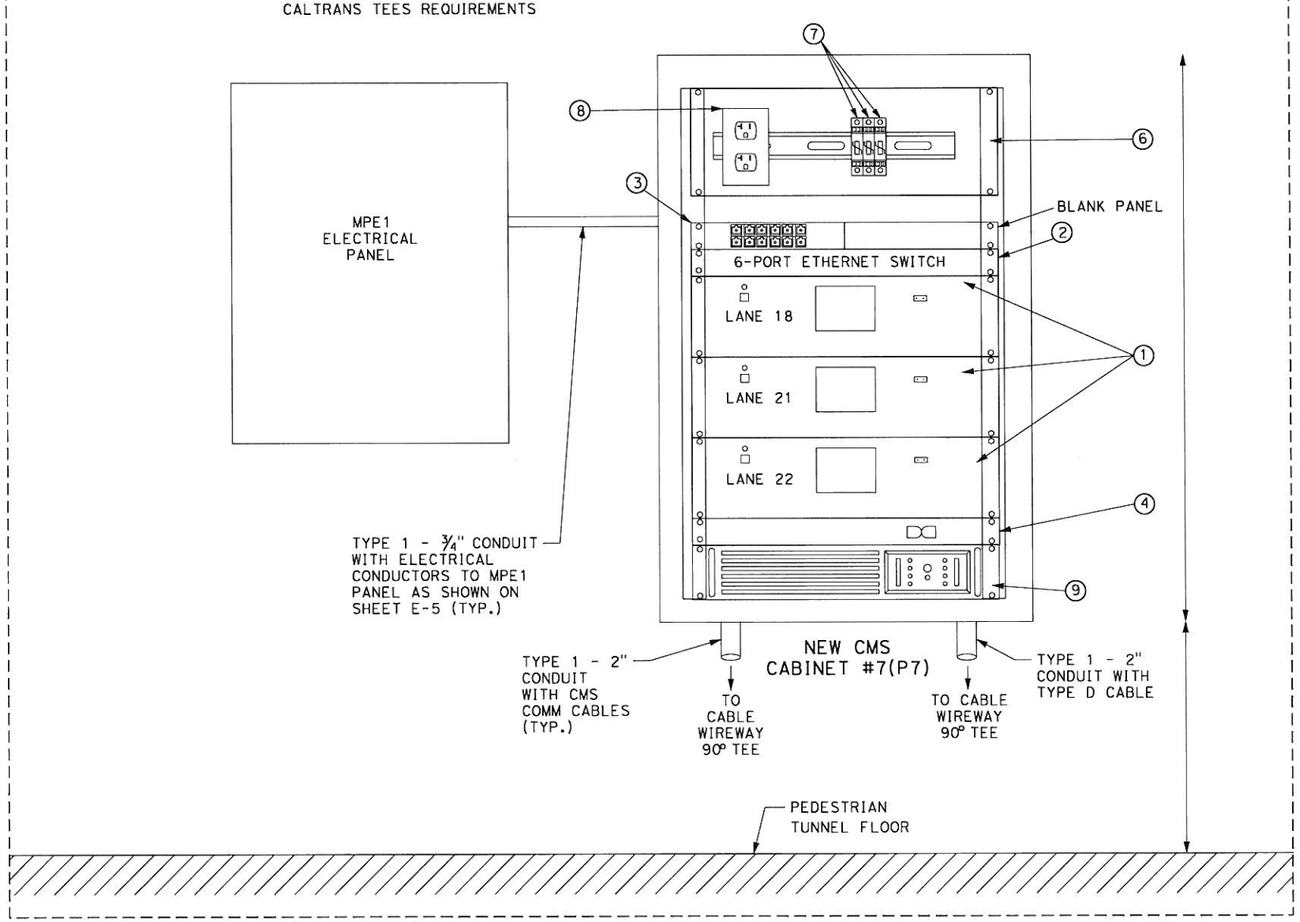

DETAIL A
LANE 18, 21 & 22 CMS CABINET ELEVATION
SEE SHEET E-5 FOR CMS CABINET LOCATION

NOTES:

1. CONTRACTOR HAS THE OPTION OF ROUTING CONDUITS FROM THE TOP AND/OR BOTTOM OF THE CABINETS.
2. INSTALL WEATHERPROOF LB FITTING OR CONDULET INTO CABINET.
3. ALL CMS CABINET EQUIPMENT AND CONDUIT LOCATIONS SHOWN ON PLANS AND DETAILS ARE APPROXIMATE. FINAL LOCATION OF ALL EQUIPMENT AND MATERIALS SHALL BE AS DIRECTED AND APPROVED BY THE ENGINEER.
4. CMS CABINET MOUNTED TO A CONCRETE WALL SHALL BE ATTACHED TO THE WALL USING 3/8" DIAMETER EXPANSION ANCHORS, TOTAL 4 PER CABINET ATTACHED TO THE CONCRETE WALL. CONTRACTOR MAY PROPOSE AN ALTERNATIVE MOUNTING METHOD (I.E., MOUNTING RAILS) FOR APPROVAL BY ENGINEER.
5. CONTRACTOR TO CONNECT TVSS BETWEEN CMS CONTROLLER AND CMS PANELS.

AS BUILT
(NO CORRECTIONS ON THIS SHEET)
CONTRACT No. 0G420K, B.A.T.A. 006
C.C.A. DATE 6-18-2010
R.E. NAME BRUCE J. SHENOWAK

ORT LANES 18, 21 & 22 CMS CABINET ELEVATION VIEW

NO SCALE

E-18

THIS PLAN ACCURATE FOR ELECTRICAL WORK ONLY

STATE OF CALIFORNIA - DEPARTMENT OF TRANSPORTATION
Caltrans
CONSULTANT FUNCTIONAL SUPERVISOR: LARRY JONES
CALCULATED-DESIGNED BY
CHECKED BY
REVISED BY
DATE REVISED

LAST REVISION 00-00-00
DATE PLOTTED => 8/30/2010
TIME PLOTTED => 7:56:37 AM

BORDER LAST REVISED 4/11/2008
RELATIVE BORDER SCALE IS IN INCHES 0 1 2 3
USERNAME=> jason_vincent
DGN FILE=> I:\Projects\28645026\its\ORT\AS-BUILTS\E-18_new.dgn
CU 00000
EA 0G420K

Dist	COUNTY	ROUTE	POST MILES TOTAL PROJECT	SHEET No.	TOTAL SHEETS
04	Ala	80	1.8/2.1	44	

REGISTERED CIVIL ENGINEER 6/10/09 DATE

PLANS APPROVAL DATE

REGISTERED PROFESSIONAL ENGINEER RAMSEY J. HISSEN No. C-39608 Exp. 12/31/09 CIVIL STATE OF CALIFORNIA

THE STATE OF CALIFORNIA OR ITS OFFICERS OR AGENTS SHALL NOT BE RESPONSIBLE FOR THE ACCURACY OR COMPLETENESS OF SCANNED COPIES OF THIS PLAN SHEET.

BAY AREA TOLL AUTHORITY
101 EIGHTH STREET
OAKLAND, CA 94607

URS CORPORATION
55 SOUTH MARKET STREET
SUITE 1500
SAN JOSE, CA 95113-2332

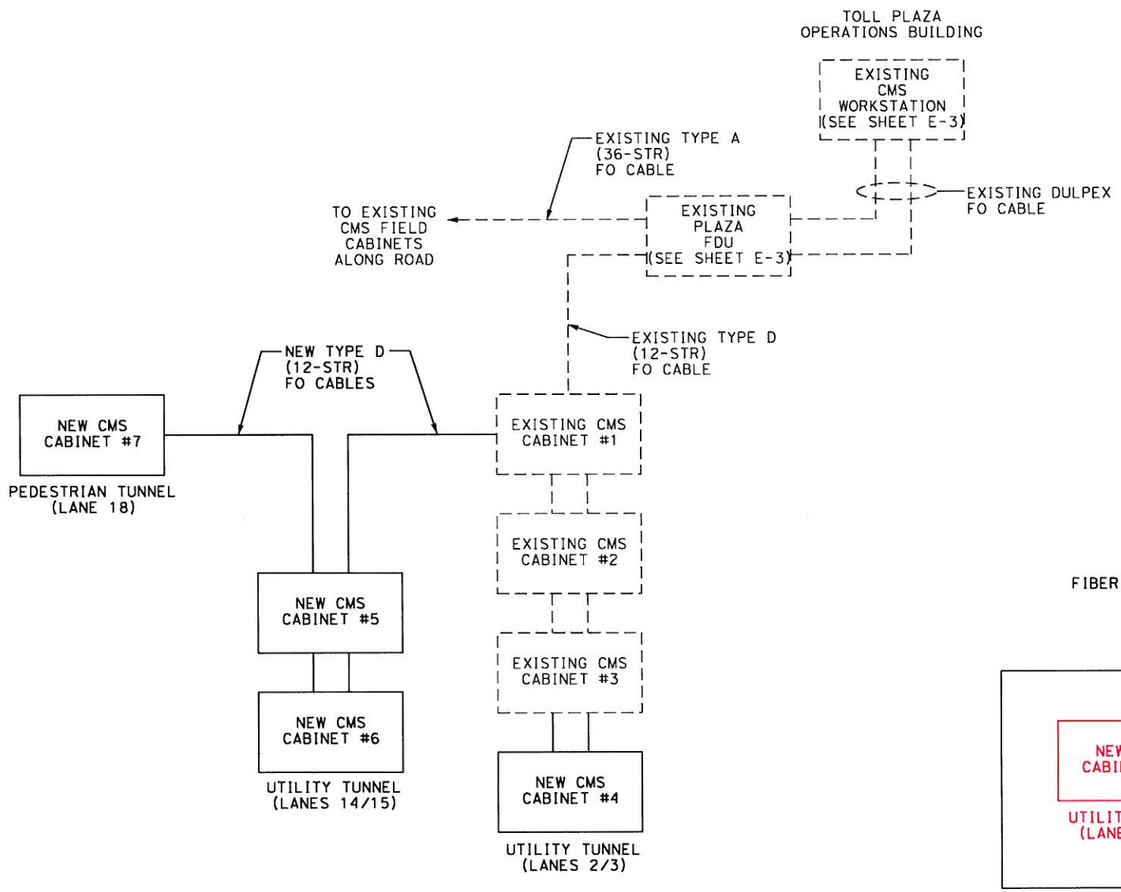

DETAIL A: CMS SYSTEM FIBER CABLE PLAN

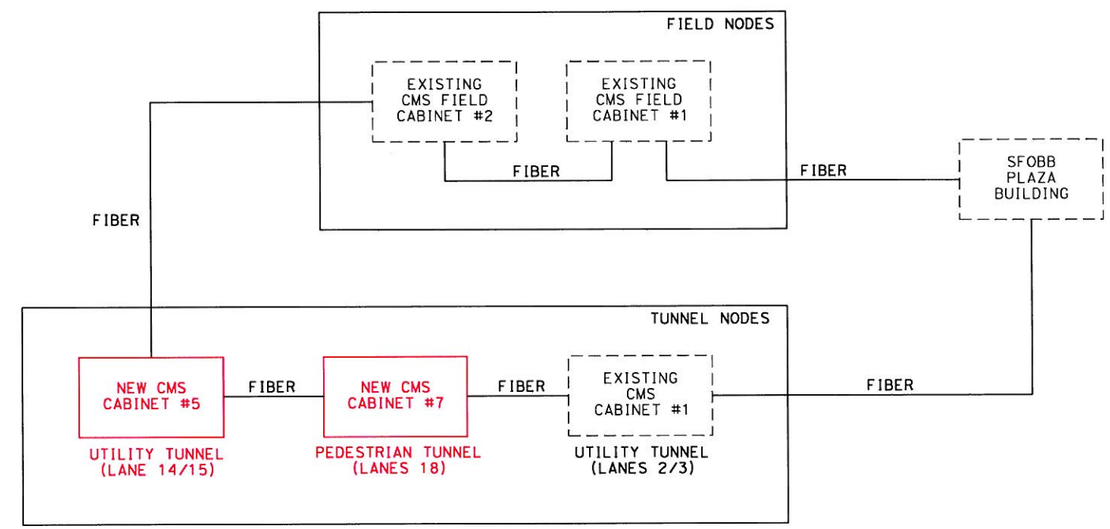

DETAIL B: CMS SYSTEM LOGICAL ARCHITECTURE

AS BUILT
CONTRACT No. 0G420K BATA-006
C.C.A. DATE 6.18.2010
R.E. NAME BRUCE J. SHELVCHUK

CMS SYSTEM NETWORK DETAILS

NO SCALE

E-19

THIS PLAN ACCURATE FOR ELECTRICAL WORK ONLY

STATE OF CALIFORNIA - DEPARTMENT OF TRANSPORTATION
Caltrans
CONSULTANT FUNCTIONAL SUPERVISOR: LARRY JONES
CALCULATED-DESIGNED BY
CHECKED BY
REVISED BY
DATE REVISED

LAST REVISION 00-00-00
DATE PLOTTED => 8/30/2010
TIME PLOTTED => 7:56:45 AM

Dist	COUNTY	ROUTE	POST MILES TOTAL PROJECT	SHEET No.	TOTAL SHEETS
04	Ala	80	1.8/2.1	45	

REGISTERED CIVIL ENGINEER — DATE 6/10/09

PLANS APPROVAL DATE

REGISTERED PROFESSIONAL ENGINEER — RAMSEY J. HISSEN — No. C-39608 — Exp. 12/31/09 — CIVIL — STATE OF CALIFORNIA

THE STATE OF CALIFORNIA OR ITS OFFICERS OR AGENTS SHALL NOT BE RESPONSIBLE FOR THE ACCURACY OR COMPLETENESS OF SCANNED COPIES OF THIS PLAN SHEET.

BAY AREA TOLL AUTHORITY
101 EIGHTH STREET
OAKLAND, CA 94607

URS CORPORATION
55 SOUTH MARKET STREET
SUITE 1500
SAN JOSE, CA 95113-2332

FIBER COLOR STANDARD

AQ	AQUA	RD	RED
BK	BLACK	RS	ROSE
BL	BLUE	SL	SLATE
BR	BROWN	VI	VIOLET
GR	GREEN	WH	WHITE
OR	ORANGE	YL	YELLOW

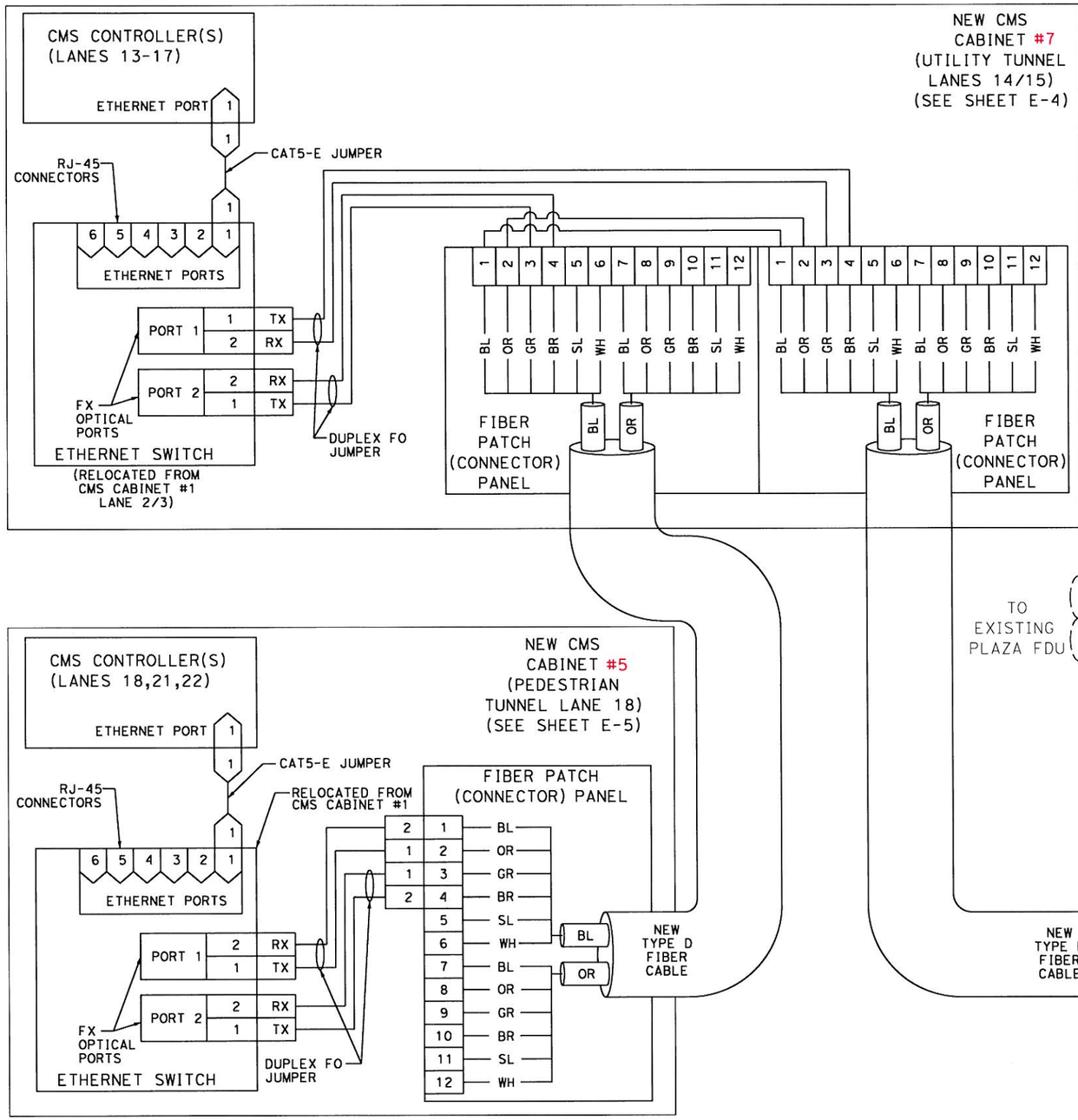

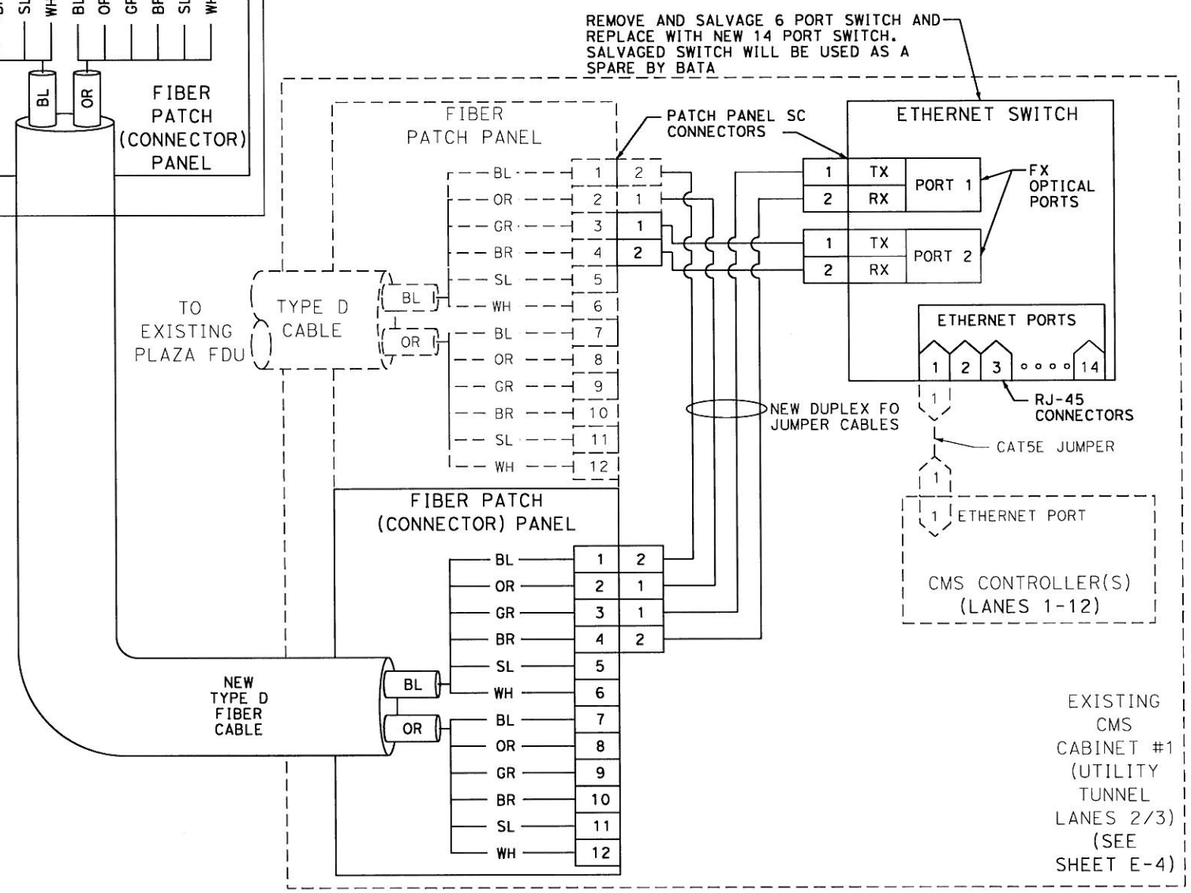

NOTES:

1. CONTRACTOR SHALL COORDINATE CLOSELY WITH BATA ON RE-CONFIGURATION OF CMS ETHERNET SWITCHES AND NETWORK OPERATIONS.
2. CONTRACTOR TO FIELD VERIFY THAT ALL TX/RX PORTS ARE MATCHED FOR PROPER OPERATIONS THROUGHOUT CMS NETWORK.

CMS SYSTEM FIBER ASSIGNMENTS

NO SCALE

AS BUILT
CONTRACT No. 0G420K BATA-006
C.C.A. DATE 6-18-2010
R.E. NAME BRUCE J. SHENCHUK

E-20

THIS PLAN ACCURATE FOR ELECTRICAL WORK ONLY

STATE OF CALIFORNIA - DEPARTMENT OF TRANSPORTATION
Caltrans
CONSULTANT FUNCTIONAL SUPERVISOR: LARRY JONES
CALCULATED-DESIGNED BY / CHECKED BY
REVISED BY / DATE REVISED

LAST REVISION 00-00-00 — DATE PLOTTED => 8/30/2010 — TIME PLOTTED => 7:56:52 AM

BORDER LAST REVISED 4/11/2008 — RELATIVE BORDER SCALE IS IN INCHES 0 1 2 3 — USERNAME=> jason_vincent — DGN FILE=> I:\Projects\28645026\its\ORT\AS-BUILTS\E-20_new.dgn — CU 00000 — EA 0G420K

Dist	COUNTY	ROUTE	POST MILES TOTAL PROJECT	SHEET No.	TOTAL SHEETS
04	Ala	80	1.8/2.1	46	

REGISTERED CIVIL ENGINEER — DATE 6/10/09

PLANS APPROVAL DATE

REGISTERED PROFESSIONAL ENGINEER — RAMSEY J. HISSEN — No. C-39608 — Exp. 12/31/09 — CIVIL — STATE OF CALIFORNIA

THE STATE OF CALIFORNIA OR ITS OFFICERS OR AGENTS SHALL NOT BE RESPONSIBLE FOR THE ACCURACY OR COMPLETENESS OF SCANNED COPIES OF THIS PLAN SHEET.

BAY AREA TOLL AUTHORITY
101 EIGHTH STREET
OAKLAND, CA 94607

URS CORPORATION
55 SOUTH MARKET STREET
SUITE 1500
SAN JOSE, CA 95113-2332

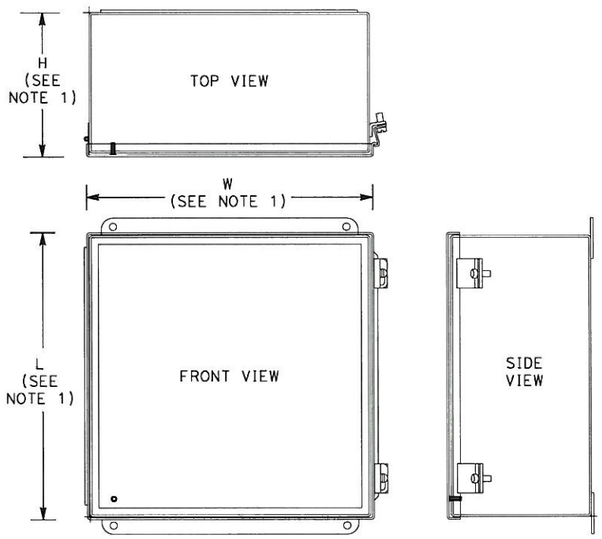

NEMA 4X JUNCTION BOX
(SHOWN WITH HINGE)

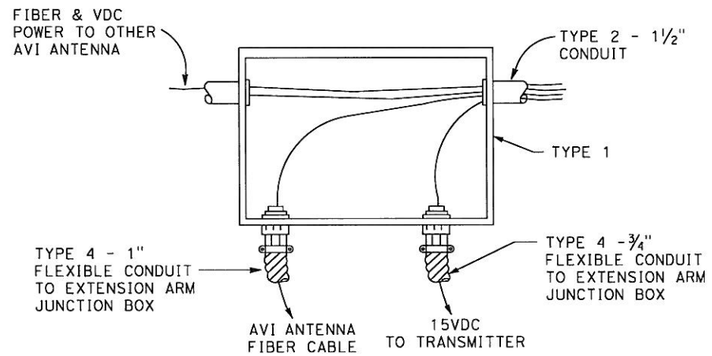

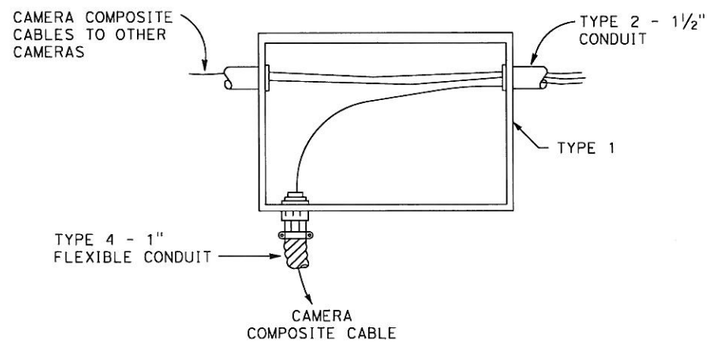

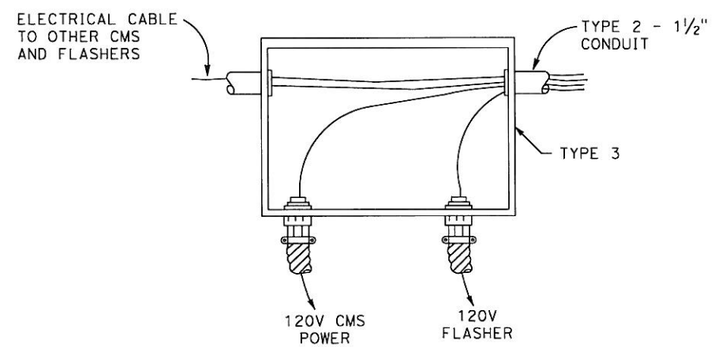

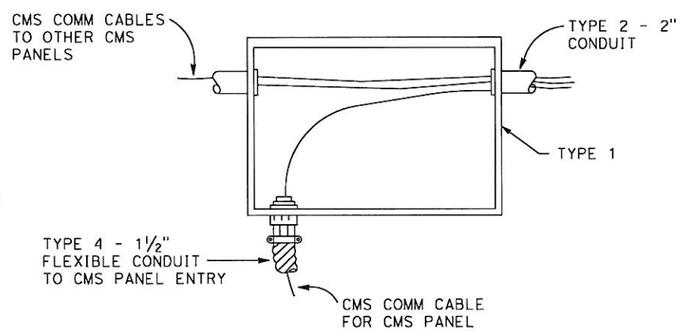

NOTES:

1. TYPE 1 NEMA 4X JUNCTION BOX (12"L X 12"W X 6"D, TYP.) OR AS REQ'D.
   TYPE 2 NEMA 4X JUNCTION BOX (20"L X 16"W X 10"D, TYP.) OR AS REQ'D.
   TYPE 3 NEMA 4X JUNCTION BOX (5"L X 6"W X 4"D, TYP.) OR AS REQ'D.
2. MINIMUM SIZES OF JUNCTION BOXES SHOWN. CONTRACTOR SHALL CONFIRM SIZES AND QUANTITES IN FIELD AND SUBMIT SHOP DRAWINGS TO ENGINEER FOR APPROVAL.
3. FOR JUNCTION BOX MOUNTED ON EXISTING CONCRETE WALLS OR SURFACE FLOR MOUNTED USE ⅜" EXPANSION ANCHORS, TOTAL OF 4 FOR EACH BOX.
4. COIL A MINIMUM OF 3' OF CABLE FOR EACH DEVICE IN THE TYPE 1 AND TYPE 2 JUNCTION BOXES.

AS BUILT
(NO CORRECTIONS ON THIS SHEET)
CONTRACT No. 0G420K BATA-00
C.C.A. DATE 6.18.2010
R.E. NAME BRUCE J. SHEWCHUK

JUNCTION BOX DETAILS

NO SCALE

THIS PLAN ACCURATE FOR ELECTRICAL WORK ONLY

E-21

REVISED BY | DATE REVISED
CALCULATED-DESIGNED BY | CHECKED BY
CONSULTANT FUNCTIONAL SUPERVISOR: LARRY JONES
STATE OF CALIFORNIA - DEPARTMENT OF TRANSPORTATION
Caltrans

LAST REVISION 00-00-00 | DATE PLOTTED => 8/30/2010 | TIME PLOTTED => 7:57:00 AM

BORDER LAST REVISED 4/11/2008 | RELATIVE BORDER SCALE IS IN INCHES 0 1 2 3 | USERNAME=> jason_vincent | DGN FILE=> I:\Projects\28645026\its\ORT\AS-BUILTS\E-21_new.dgn | CU 00000 | EA 0G420K

Dist	COUNTY	ROUTE	POST MILES TOTAL PROJECT	SHEET No.	TOTAL SHEETS
04	Ala	80	1.8/2.1	47	

REGISTERED CIVIL ENGINEER 6/10/09 DATE

PLANS APPROVAL DATE

REGISTERED PROFESSIONAL ENGINEER RAMSEY J. HISSEN No. C-39608 Exp. 12/31/09 CIVIL STATE OF CALIFORNIA

THE STATE OF CALIFORNIA OR ITS OFFICERS OR AGENTS SHALL NOT BE RESPONSIBLE FOR THE ACCURACY OR COMPLETENESS OF SCANNED COPIES OF THIS PLAN SHEET.

BAY AREA TOLL AUTHORITY
101 EIGHTH STREET
OAKLAND, CA 94607

URS CORPORATION
55 SOUTH MARKET STREET
SUITE 1500
SAN JOSE, CA 95113-2332

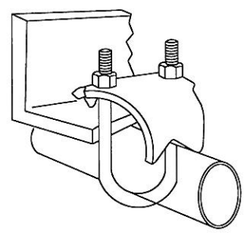

FOR MOUNTING PIPES OR CONDUIT AT RIGHT ANGLES TO THE BEAM DETAIL

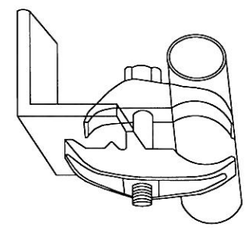

FOR MOUNTING PIPES OR CONDUIT PARALLEL TO THE BEAM DETAIL

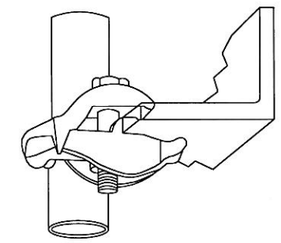

FOR MOUNTING PIPES OR CONDUIT VERTICALLY ACROSS BEAM EDGE DETAIL

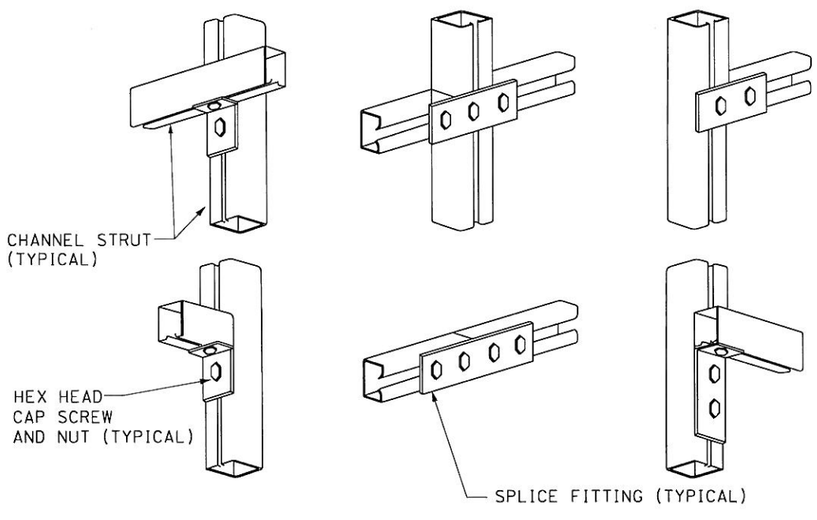

TYPICAL EQUIPMENT SUPPORT CHANNEL, FITTINGS AND FASTERERS

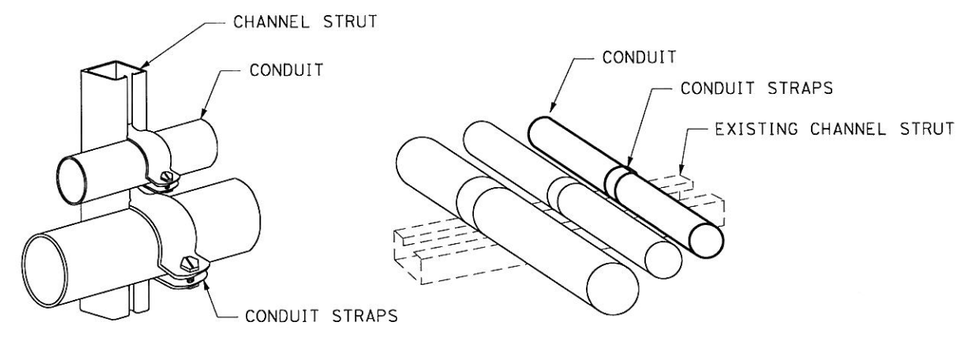

MOUNTING ON STRUT DETAILS

AS BUILT
(NO CORRECTIONS ON THIS SHEET)
CONTRACT No. 06420K, BATA-001
C.C.A. DATE 6.18.2010
R.E. NAME BRUCE J. SHENOALK

CONDUIT MOUNTING AND ATTACHMENT DETAILS

NO SCALE

E-22

THIS PLAN ACCURATE FOR ELECTRICAL WORK ONLY

STATE OF CALIFORNIA - DEPARTMENT OF TRANSPORTATION
Caltrans

CONSULTANT FUNCTIONAL SUPERVISOR: LARRY JONES

CALCULATED-DESIGNED BY
CHECKED BY

REVISED BY
DATE REVISED

LAST REVISION 00-00-00
DATE PLOTTED => 8/30/2010
TIME PLOTTED => 7:57:07 AM

BORDER LAST REVISED 4/11/2008

RELATIVE BORDER SCALE IS IN INCHES 0 1 2 3

USERNAME=> jason_vincent
DGN FILE=> I:\Projects\28645026\its\ORT\AS-BUILTS\E-22_new.dgn

CU 00000

EA 0G420K

Dist	COUNTY	ROUTE	POST MILES TOTAL PROJECT	SHEET No.	TOTAL SHEETS
04	Ala	80	1.8/2.1	48	

REGISTERED CIVIL ENGINEER — DATE 6/10/09

PLANS APPROVAL DATE

REGISTERED PROFESSIONAL ENGINEER — RAMSEY J. HISSEN — No. C-39608 — Exp. 12/31/09 — CIVIL — STATE OF CALIFORNIA

THE STATE OF CALIFORNIA OR ITS OFFICERS OR AGENTS SHALL NOT BE RESPONSIBLE FOR THE ACCURACY OR COMPLETENESS OF SCANNED COPIES OF THIS PLAN SHEET.

BAY AREA TOLL AUTHORITY
101 EIGHTH STREET
OAKLAND, CA 94607

URS CORPORATION
55 SOUTH MARKET STREET
SUITE 1500
SAN JOSE, CA 95113-2332

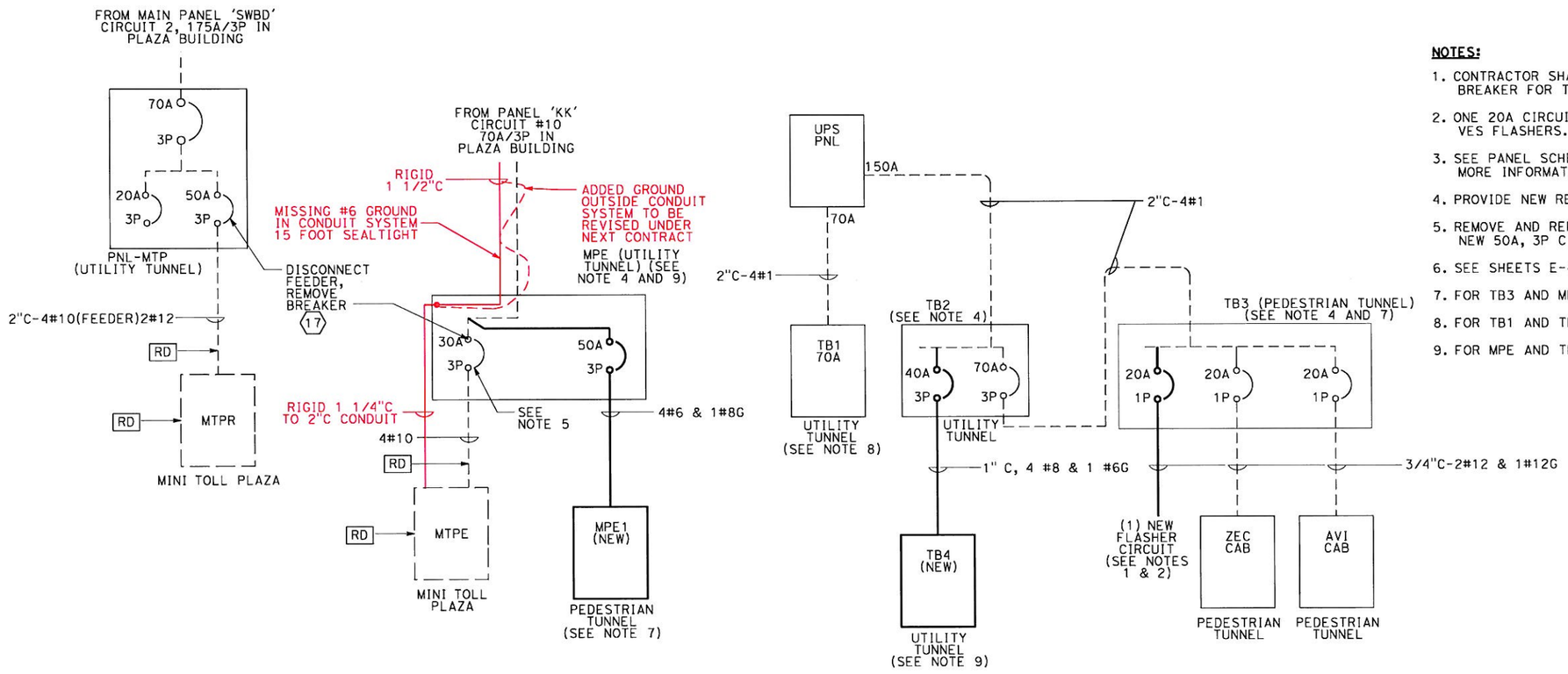

NOTES:

1. CONTRACTOR SHALL RE-USE EXISTING 20A CIRCUIT BREAKER FOR TEMPORARY VES FLASHER (ILLUMINATOR).
2. ONE 20A CIRCUIT BREAKER FOR EACH GANTRY FOR VES FLASHERS.
3. SEE PANEL SCHEDULES (SHEETS E-24 THRU E-26) FOR MORE INFORMATION.
4. PROVIDE NEW REVISED (TYPE-WRITTEN) PANEL SCHEDULE.
5. REMOVE AND REPLACE (E) 30A, 3P CIRCUIT BREAKER WITH NEW 50A, 3P CIRCUIT BREAKER (120/208 V, PANEL-MPE1)
6. SEE SHEETS E-4 AND E-5 FOR PANEL LOCATIONS.
7. FOR TB3 AND MPE1 SCHEDULES, SEE SHEET E-24.
8. FOR TB1 AND TB2 SCHEDULES, SEE SHEET E-25.
9. FOR MPE AND TB4 SCHEDULES, SEE SHEET E-26.

AS BUILT
CONTRACT No. 0G420K, BATA-006
C.C.A. DATE 6.18.2010
R.E. NAME BRUCE J. SHEWCHUK

PARTIAL ONE LINE DIAGRAM

NO SCALE

E-23

STATE OF CALIFORNIA - DEPARTMENT OF TRANSPORTATION
Caltrans
CONSULTANT FUNCTIONAL SUPERVISOR: LARRY JONES
CALCULATED-DESIGNED BY
CHECKED BY
REVISED BY
DATE REVISED

LAST REVISION 00-00-00 — DATE PLOTTED => 8/30/2010 — TIME PLOTTED => 7:57:14 AM

Dist	COUNTY	ROUTE	POST MILES TOTAL PROJECT	SHEET No.	TOTAL SHEETS
04	Ala	80	1.8/2.1	49	

REGISTERED CIVIL ENGINEER — DATE 6/10/09

PLANS APPROVAL DATE

REGISTERED PROFESSIONAL ENGINEER — RAMSEY J. HISSEN — No. C-39608 — Exp. 12/31/09 — CIVIL — STATE OF CALIFORNIA

THE STATE OF CALIFORNIA OR ITS OFFICERS OR AGENTS SHALL NOT BE RESPONSIBLE FOR THE ACCURACY OR COMPLETENESS OF SCANNED COPIES OF THIS PLAN SHEET.

BAY AREA TOLL AUTHORITY
101 EIGHTH STREET
OAKLAND, CA 94607

URS CORPORATION
55 SOUTH MARKET STREET
SUITE 1500
SAN JOSE, CA 95113-2332

(E) PANEL TB3

PROJECT: SFOBB - ORT

LOCATION: PEDESTRIAN TUNNEL

PERMANENT TOLLING SYSTEM

LOAD DESCRIPTION	LTG.	G.P. REC	OTH.	CB AMP	CB POLE				CB AMP	CB POLE	LTG.	G.P. REC	OTH.	LOAD DESCRIPTION
SPARE				20	1	1	A	2	20	1			0.20	ZEC CABINET
SPARE				20	1	3	B	4	20	1			0.40	AVI CABINET
SPARE				20	1	5	C	6	20	1			0.20	REAR VES ILLUM - 1ST GANTRY
SPARE				20	1	7	A	8	20				0.20	FRONT VES ILLUM - 2ND GANTRY
SPARE				20	1	9	B	10						SPACE
SPARE				20	1	11	C	12						SPACE
SPARE				20	1	13	A	14						SPACE
SPARE				20	1	15	B	16						SPACE
SPARE				20	1	17	C	18						SPACE
SPARE				20	1	19	A	20						SPACE
SPARE				20	1	21	B	22						SPACE
SPARE				20	1	23	C	24						SPACE
TOTALS SECTION 1	0.00	0.00	0.00								0.00	0.00	1.00	

VOLTAGE: 120/208V	LOAD SUMMARY							ADDITIONAL FEATURES:
PHASE/WIRE: 3 PHASE, 4 WIRE								
RATING: 100A	CONNECT LOAD	DEMAND FACTOR	DEMAND LOAD	BALANCE:	(KVA)	%	AMPS:	
MAINS:	0.00	125% OF LOAD	0.00	PHASE A:	0.60	60.00	1.67	
	0.00	NEC 220-13	0.00	PHASE B:	0.20	20.00	0.56	
MOUNTING:	1.00	1.00	1.00	PHASE C:	0.20	20.00	0.56	
SURFACE								
A.I.C.:	1.00 KVA		1.00 KVA					
	2.8 AMPS		2.8 AMPS					
BUS SIZE: 100A								S&L JOB #: 29018

(N) PANEL MPE1

PROJECT: SFOBB - ORT

LOCATION: PEDESTRIAN TUNNEL

LOAD DESCRIPTION	LTG.	G.P. REC	OTH.	CB AMP	CB POLE				CB AMP	CB POLE	LTG.	G.P. REC	OTH.	LOAD DESCRIPTION
CMS SIGN-LANE 18			0.50	15	1	1	A	2	20	1				SPARE
CMS SIGN-LANE 20			0.50	15	1	3	B	4	20	1				SPARE
CMS SIGN-LANE 21			0.50	15	1	5	C	6	15	1				SPARE
CMS CABINET			1.10	20	1	7	A	8		1				SPACE
SPACE					1	9	B	10		1				SPACE
SPACE					1	11	C	12		1				SPACE
SPACE					1	13	A	14		1				SPACE
SPACE					1	15	B	16		1				SPACE
SPACE					1	17	C	18		1				SPACE
SPACE					1	19	A	20		1				SPACE
SPACE					1	21	B	22		1				SPACE
SPACE					1	23	C	24		1				SPACE
TOTALS SECTION 1	0.00	0.00	2.60								0.00	0.00	0.00	

VOLTAGE: 120/208V	LOAD SUMMARY							ADDITIONAL FEATURES:
PHASE/WIRE: 3 PHASE, 4 WIRE								
RATING: 100A	CONNECT LOAD	DEMAND FACTOR	DEMAND LOAD	BALANCE:	(KVA)	%	AMPS:	
MAINS:	0.00	125% OF LOAD	0.00	PHASE A:	1.60	61.54	4.44	
MLO (Main Lug Only)	0.00	NEC 220-13	0.00	PHASE B:	0.50	19.23	1.39	
MOUNTING:	2.60	1.00	2.60	PHASE C:	0.50	19.23	1.39	
SURFACE								
A.I.C.:	2.60 KVA		2.60 KVA					
	7.2 AMPS		7.2 AMPS					
BUS SIZE: 100A								S&L JOB #: 29018

AS BUILT
(NO CORRECTIONS ON THIS SHEET)
CONTRACT No. 0G420K, BATA: ODP
C.C.A. DATE 6.18.2010
R.E. NAME BRUCE J. SHENCHUK

TB3 AND MPE1 PANELBOARD SCHEDULES

NO SCALE

E-24

STATE OF CALIFORNIA - DEPARTMENT OF TRANSPORTATION
Caltrans
CONSULTANT FUNCTIONAL SUPERVISOR: LARRY JONES
CALCULATED-DESIGNED BY
CHECKED BY
REVISED BY
DATE REVISED

LAST REVISION 00-00-00 DATE PLOTTED => 9/1/2010 TIME PLOTTED => 1:57:40 PM

Dist	COUNTY	ROUTE	POST MILES TOTAL PROJECT	SHEET No.	TOTAL SHEETS
04	Ala	80	1.8/2.1	50	

REGISTERED CIVIL ENGINEER — DATE 6/10/09

PLANS APPROVAL DATE

REGISTERED PROFESSIONAL ENGINEER — RAMSEY J. HISSEN — No. C-39608 — Exp. 12/31/09 — CIVIL — STATE OF CALIFORNIA

THE STATE OF CALIFORNIA OR ITS OFFICERS OR AGENTS SHALL NOT BE RESPONSIBLE FOR THE ACCURACY OR COMPLETENESS OF SCANNED COPIES OF THIS PLAN SHEET.

BAY AREA TOLL AUTHORITY
101 EIGHTH STREET
OAKLAND, CA 94607

URS CORPORATION
55 SOUTH MARKET STREET
SUITE 1500
SAN JOSE, CA 95113-2332

(E) PANEL TB1

PROJECT: SFOBB - ORT

LOCATION: PEDESTRIAN TUNNEL

LOAD DESCRIPTION	LTG.	G.P. REC	OTH.	CB AMP	CB POLE				CB AMP	CB POLE	LTG.	G.P. REC	OTH.	LOAD DESCRIPTION
(E) LANE 1 BOOTH A				20	1	1	A	2	20	1				(E) LANE 8 LIGHT CURTAIN
(E) LANE 1 LIGHT CURTAIN				20	1	3	B	4	20	1				(E) LANE 9 BOOTH A
(E) LANE 2 BOOTH A				20	1	5	C	6	20	1				(E) LANE 9 LIGHT CURTAIN
(E) LANE 2 LIGHT CURTAIN				20	1	7	A	8	20	1				(E) LANE 9 LIGHT SENSORS
(E) LANE 3 BOOTH A				20	1	9	B	10	15	1			1.00	(E) CMS CABINET #1
(E) LANE 3 LIGHT CURTAIN				20	1	11	C	12	15	1			1.00	(E) CMS CABINET #2
(E) LANE 4 BOOTH A				20	1	13	A	14	15	1			1.00	(E) CMS CABINET #3
(E) LANE 4 LIGHT CURTAIN				20	1	15	B	16	15	1			0.50	(E) CMS SIGN (LN 6)
(E) LANE 5 BOOTH A				20	1	17	C	18	15	1			0.50	(E) CMS SIGN (LN 7)
(E) LANE 5 LIGHT CURTAIN				20	1	19	A	20	15	1			0.50	(E) CMS SIGN (LN 8)
(E) LANE 6 BOOTH A				20	1	21	B	22	15	1			0.50	(E) CMS SIGN (LN 9)
(E) LANE 6 LIGHT CURTAIN				20		23	C	24	15	1			0.50	(E) CMS SIGN (LN 10)
(E) LANE 7 BOOTH A				20		25	A	26	15	1			0.50	(E) CMS SIGN (LN 11)
(E) LANE 7 LIGHT CURTAIN				20		27	B	28	15	1			0.50	(E) CMS SIGN (LN 12)
(E) LANE 8 BOOTH A				20		29	C	30	15	1			1.00	(N) CMS CABINET #4
TOTALS SECTION 1	0.00	0.00	0.00								0.00	0.00	7.50	

VOLTAGE: 120/208V
PHASE/WIRE: 3 PHASE, 4 WIRE
RATING: 100A
MAINS:
MLO (Main Lug Only)
MOUNTING: SURFACE
A.I.C.:
BUS SIZE: 100A

LOAD SUMMARY	CONNECT LOAD	DEMAND FACTOR	DEMAND LOAD
MAINS:	0.00	125% OF LOAD	0.00
MLO (Main Lug Only)	0.00	NEC 220-13	0.00
MOUNTING:	7.50	1.00	7.50
A.I.C.:	7.50 KVA		7.50 KVA
	20.8 AMPS		20.8 AMPS

BALANCE:	(KVA)	%	AMPS:
PHASE A:	2.00	26.67	5.56
PHASE B:	2.50	33.33	6.94
PHASE C:	3.00	40.00	8.33

ADDITIONAL FEATURES:

S&L JOB #: 29018

(E) PANEL TB2

PROJECT: SFOBB - ORT

LOCATION: PEDESTRIAN TUNNEL

LOAD DESCRIPTION	LTG.	G.P. REC	OTH.	CB AMP	CB POLE				CB AMP	CB POLE	LTG.	G.P. REC	OTH.	LOAD DESCRIPTION
(E) LANE 10 BOOTH A				20	1	1	A	2	20	1				(E) LANE 14 LIGHT CURTAIN
(E) LANE 10 LIGHT CURTAIN				20	1	3	B	4	15	1			0.50	(N) CMS SIGN (LN 13)
(E) LANE 11 BOOTH A				20	1	5	C	6	15	1			0.50	(N) CMS SIGN (LN 14)
(E) LANE 11 LIGHT CURTAIN				20	1	7	A	8	15	1			0.50	(N) CMS SIGN (LN 15)
(E) LANE 12 BOOTH A				20	1	9	B	10	15	1			0.50	(N) CMS SIGN (LN 16)
(E) LANE 12 LIGHT CURTAIN				20	1	11	C	12	15	1			0.50	(N) CMS SIGN (LN 17)
(E) LANE 13 BOOTH A				20	1	13	A	14	20	1				P-5
(E) LANE 13 LIGHT CURTAIN				20	1	15	B	16	20	1				P-6
(E) LANE 14 BOOTH A				20	1	17	C	18	20	1				CCTV
(E) LANE 15 LIGHT CURTAIN				20	1	19	A	20	40	3			1.00	
(E) LANE 15 BOOTH A				20	1	21	B	22					1.00	(N) PANEL-TB4
(E) LANE 16 LIGHT CURTAIN				20	1	23	C	24					0.50	
(E) LANE 16 BOOTH A				20	1	25	A	26	70	3			0.60	
(E) LANE 17 LIGHT CURTAIN				20	1	27	B	28					0.40	(E) PANEL-TB3 (PED. TUNNEL)
(E) LANE 17 BOOTH A				20	1	29	C	30					0.00	
TOTALS SECTION 1	0.00	0.00	0.00								0.00	0.00	6.00	

VOLTAGE: 120/208V
PHASE/WIRE: 3 PHASE, 4 WIRE
RATING: 100A
MAINS:
MLO (Main Lug Only)
MOUNTING: SURFACE
A.I.C.:
BUS SIZE: 100A

LOAD SUMMARY	CONNECT LOAD	DEMAND FACTOR	DEMAND LOAD
MAINS:	0.00	125% OF LOAD	0.00
MLO (Main Lug Only)	0.00	NEC 220-13	0.00
MOUNTING:	6.00	1.00	6.00
A.I.C.:	6.00 KVA		6.00 KVA
	16.7 AMPS		16.7 AMPS

BALANCE:	(KVA)	%	AMPS:
PHASE A:	1.50	25.00	4.17
PHASE B:	2.00	33.33	5.56
PHASE C:	1.00	16.67	2.78

ADDITIONAL FEATURES:

S&L JOB #: 29018

AS BUILT
CONTRACT No. 0G420K, EA 0A-006
C.C.A. DATE 6-18-2010
R.E. NAME BRUCE J. SHEWCHUK

TB1 AND TB2 PANELBOARD SCHEDULES

NO SCALE

E-25

STATE OF CALIFORNIA - DEPARTMENT OF TRANSPORTATION
Caltrans

CONSULTANT FUNCTIONAL SUPERVISOR: LARRY JONES

CALCULATED-DESIGNED BY | CHECKED BY | REVISED BY | DATE REVISED

LAST REVISION 00-00-00 | DATE PLOTTED => 9/1/2010 | TIME PLOTTED => 1:58:39 PM

BORDER LAST REVISED 4/11/2008 | RELATIVE BORDER SCALE IS IN INCHES 0 1 2 3 | USERNAME=> jason_vincent | DGN FILE=> I:\Projects\28645026\its\ORT\AS-BUILTS\E-25_new.dgn | CU 00000 | EA 0G420K

Dist	COUNTY	ROUTE	POST MILES TOTAL PROJECT	SHEET No.	TOTAL SHEETS
04	Ala	80	1.8/2.1	51	

REGISTERED CIVIL ENGINEER — DATE 6/10/09

PLANS APPROVAL DATE

REGISTERED PROFESSIONAL ENGINEER — RAMSEY J. HISSEN — No. C-39608 — Exp. 12/31/09 — CIVIL — STATE OF CALIFORNIA

THE STATE OF CALIFORNIA OR ITS OFFICERS OR AGENTS SHALL NOT BE RESPONSIBLE FOR THE ACCURACY OR COMPLETENESS OF SCANNED COPIES OF THIS PLAN SHEET.

BAY AREA TOLL AUTHORITY
101 EIGHTH STREET
OAKLAND, CA 94607

URS CORPORATION
55 SOUTH MARKET STREET
SUITE 1500
SAN JOSE, CA 95113-2332

(E) PANEL MPE

PROJECT: SFOBB - ORT

LOCATION: UTILITY TUNNEL

LOAD DESCRIPTION	LTG.	G.P. REC	OTH.	CB AMP	CB POLE				CB AMP	CB POLE	LTG.	G.P. REC	OTH.	LOAD DESCRIPTION
(E)PANEL-PE1 IN TB 1	0.20	0.18	0.10	20	1	1	A	2	20	1	0.20	0.18	0.10	(E)PANEL-PE10 IN TB 10
(E)PANEL-PE2 IN TB 2	0.20	0.18	0.10	20	1	3	B	4	20	1	0.20	0.18	0.10	(E)PANEL-PE11 IN TB 11
(E)PANEL-PE3 IN TB 3	0.20	0.18	0.10	20	1	5	C	6	15	1	0.20	0.18	0.10	(E)PANEL-PE12 IN TB 12
(E)PANEL-PE4 IN TB 4	0.20	0.18	0.10	20	1	7	A	8		1	0.20	0.18	0.10	(E)PANEL-PE13 IN TB 13
(E)PANEL-PE5 IN TB 5	0.20	0.18	0.10	20	1	9	B	10		1	0.20	0.18	0.10	(E)PANEL-PE14 IN TB 14
(E)PANEL-PE6 IN TB 6	0.20	0.18	0.10	20	1	11	C	12		1	0.20	0.18	0.10	(E)PANEL-PE15 IN TB 15
(E)PANEL-PE7 IN TB 7	0.20	0.18	0.10	20	1	13	A	14		1	0.20	0.18	0.10	(E)PANEL-PE16 IN TB 16
(E)PANEL-PE8 IN TB 8	0.20	0.18	0.10	20	1	15	B	16		1	0.20	0.18	0.10	(E)PANEL-PE17 IN TB 17
(E)PANEL-PE9 IN TB 9	0.20	0.18	0.10	20	1	17	C	18	20	2				SPARE
			1.70	50	3	19	A	20						
NEW PANEL-MPE1			1.70			21	B	22	15	1				SPARE
			1.70			23	C	24	15	1				SPARE
TOTALS SECTION 1	1.80	1.62	6.00								1.60	1.44	0.80	

VOLTAGE: 120/208V
PHASE/WIRE: 3 PHASE, 4 WIRE
RATING: 100A
MAINS:
MLO (Main Lug Only)
MOUNTING: SURFACE
A.I.C.:
BUS SIZE: 100A

LOAD SUMMARY

	CONNECT LOAD	DEMAND FACTOR	DEMAND LOAD
MAINS:	3.40	125% OF LOAD	4.25
MLO (Main Lug Only)	3.06	NEC 220-13	3.06
	6.80	1.00	6.80
A.I.C.:	13.26 KVA / 36.8 AMPS		14.11 KVA / 39.2 AMPS

BALANCE:	(KVA)	%	AMPS:
PHASE A:	4.58	34.54	12.7
PHASE B:	4.58	34.54	12.7
PHASE C:	4.10	30.92	11.4

ADDITIONAL FEATURES:

S&L JOB #: 29018

(N) PANEL TB4

PROJECT: SFOBB - ORT

LOCATION: UTILITY TUNNEL

FEED FROM PANEL-TB2

LOAD DESCRIPTION	LTG.	G.P. REC	OTH.	CB AMP	CB POLE				CB AMP	CB POLE	LTG.	G.P. REC	OTH.	LOAD DESCRIPTION
SPARE				15	1	1	A	2	15	1			0.50	(N) CMS SIGN (LN 1)
SPARE				15	1	3	B	4	15	1			0.50	(N) CMS SIGN (LN 2)
SPARE				15	1	5	C	6	15	1			0.50	(N) CMS SIGN (LN 3)
SPARE				15	1	7	A	8	15	1			0.50	(N) CMS SIGN (LN 4)
SPARE				15	1	9	B	10	15	1			0.50	(N) CMS SIGN (LN 5)
SPACE						11	C	12						SPACE
SPACE						13	A	14						SPACE
SPACE						15	B	16						SPACE
SPACE						17	C	18						SPACE
SPACE						19	A	20						SPACE
SPACE						21	B	22						SPACE
SPACE						23	C	24						SPACE
TOTALS SECTION 1	0.00	0.00	0.00								0.00	0.00	2.50	

VOLTAGE: 120/208V
PHASE/WIRE: 3 PHASE, 4 WIRE
RATING: 100A
MAINS: 0.00
MLO (Main Lug Only) 0.00
MOUNTING: SURFACE 2.50
A.I.C.: 2.50 KVA / 6.9 AMPS
BUS SIZE: 100A

LOAD SUMMARY

	CONNECT LOAD	DEMAND FACTOR	DEMAND LOAD
MAINS:	0.00	125% OF LOAD	0.00
MLO (Main Lug Only)	0.00	NEC 220-13	0.00
	2.50	1.00	2.50
A.I.C.:	2.50 KVA / 6.9 AMPS		2.50 KVA / 6.9 AMPS

BALANCE:	(KVA)	%	AMPS:
PHASE A:	1.00	40.00	2.8
PHASE B:	1.00	40.00	2.8
PHASE C:	0.50	20.00	1.4

ADDITIONAL FEATURES:

S&L JOB #: 29018

AS BUILT
CONTRACT No. OG420K, BATA-006
C.C.A. DATE 6.18.2010
R.E. NAME BRUCE J. SHEVCHUK

MPE AND TB4 PANELBOARD SCHEDULES

NO SCALE

E-26

REVISED BY | DATE REVISED | CALCULATED-DESIGNED BY | CHECKED BY | CONSULTANT FUNCTIONAL SUPERVISOR: LARRY JONES

STATE OF CALIFORNIA - DEPARTMENT OF TRANSPORTATION — Caltrans

LAST REVISION 00-00-00 | DATE PLOTTED => 9/1/2010 | TIME PLOTTED => 3:33:04 PM

BORDER LAST REVISED 4/11/2008 | RELATIVE BORDER SCALE IS IN INCHES 0 1 2 3 | USERNAME=> jason_vincent | DGN FILE=> I:\Projects\28645026\its\ORT\AS-BUILTS\E-26_new.dgn | CU 00000 | EA OG420K

Dist	COUNTY	ROUTE	POST MILES TOTAL PROJECT	SHEET No.	TOTAL SHEETS
04	Ala	80	1.8/2.1	52	

REGISTERED CIVIL ENGINEER 6/10/09 DATE

PLANS APPROVAL DATE

REGISTERED PROFESSIONAL ENGINEER RAMSEY J. HISSEN No. C-39608 Exp. 12/31/09 CIVIL STATE OF CALIFORNIA

THE STATE OF CALIFORNIA OR ITS OFFICERS OR AGENTS SHALL NOT BE RESPONSIBLE FOR THE ACCURACY OR COMPLETENESS OF SCANNED COPIES OF THIS PLAN SHEET.

BAY AREA TOLL AUTHORITY
101 EIGHTH STREET
OAKLAND, CA 94607

URS CORPORATION
55 SOUTH MARKET STREET
SUITE 1500
SAN JOSE, CA 95113-2332

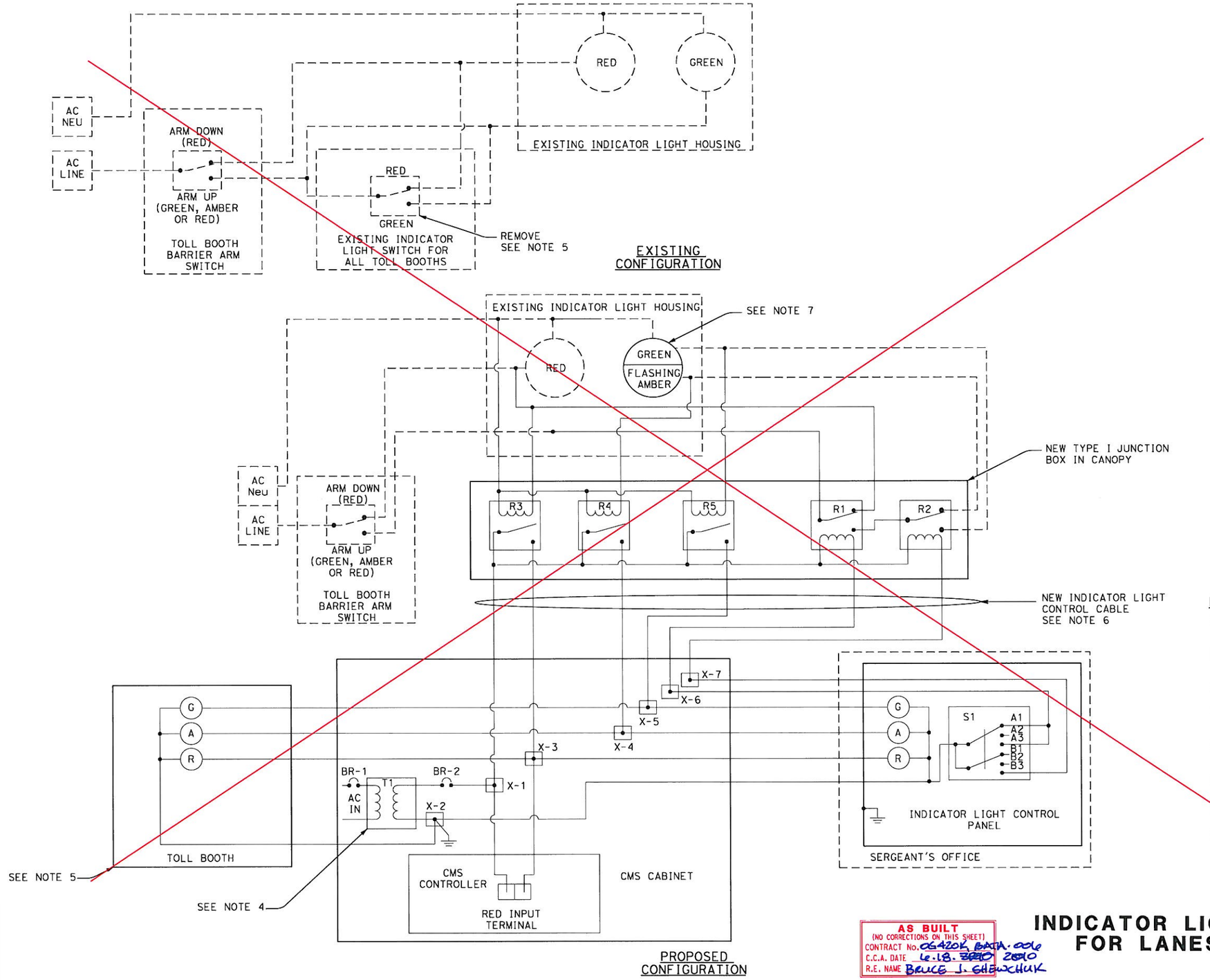

SWITCH POSITIONS
1 FLASHING AMBER
2 RED
3 GREEN

LEGEND

- (G) GREEN INDICATOR LED LIGHT, 120 VAC
- (A) AMBER INDICATOR LED LIGHT, 120 VAC
- (R) RED INDICATOR LED LIGHT, 120 VAC
- [•] CMS CABINET TERMINAL BLOCK X-B
  X = LANE NUMBER
  B = TERMINAL BLOCK NUMBER
- BR-1 3/4 AMP BREAKER, 120 VAC (1 PER CMS CABINET)
- BR-2 1/4 AMP BREAKER, 120 VAC (3 PER CMS CABINET - SEE NOTE 8)
- T1 CLASS 3, 100 WATT 1:1,120 VAC TRANSFORMER (1 PER CMS CABINET)

NOTES:

1. ELECTRICAL DIAGRAM SHOWS A SINGLE (ONE) FASTRAK LANE FOR SIMPLICITY.
2. SEE SHEET E-31 FOR INDICATOR LIGHT SWITCH CONSOLE DETAIL.
3. THIS DIAGRAM APPLIES TO LANES: 1-5, 13-16.
4. POWER TO TRANSFORMER FROM CMS CABINET POWER STRIP. ONE TRANSFORMER PER CMS CABINET.
5. REMOVE EXISTING SWITCH AND INSTALL NEW INDICATOR LED LIGHTS ON WALL BOX.
6. BELDEN 5506UE OR APPROVED EQUIVALENT.
7. REPLACE EXISTING GREEN LIGHT WITH NEW GREEN / FLASHING AMBER LIGHT.
8. ONE (1) 1/4 AMP BREAKER PER CMS CONTROLLER OR THREE (3) 1/4 AMP BREAKERS PER CMS CABINET WITH 3 CMS CONTROLLERS.

AS BUILT
(NO CORRECTIONS ON THIS SHEET)
CONTRACT No. 0G420K, BATA.006
C.C.A. DATE 12.18.2010
R.E. NAME BRUCE J. SHEWCHUK

INDICATOR LIGHT WIRING DIAGRAM FOR LANES 1-5 AND 13-16

NO SCALE

E-27

THIS PLAN ACCURATE FOR ELECTRICAL WORK ONLY

STATE OF CALIFORNIA - DEPARTMENT OF TRANSPORTATION
Caltrans
CONSULTANT FUNCTIONAL SUPERVISOR: LARRY JONES
CALCULATED-DESIGNED BY
CHECKED BY
REVISED BY
DATE REVISED

LAST REVISION 00-00-00
DATE PLOTTED => 8/30/2010
TIME PLOTTED => 7:57:55 AM

BORDER LAST REVISED 4/11/2008
RELATIVE BORDER SCALE IS IN INCHES 0 1 2 3
USERNAME=> jason_vincent
DGN FILE=> i:\Projects\28645026\its\ORT\AS-BUILTS\E-27_new.dgn
CU 00000
EA 0G420K

Dist	COUNTY	ROUTE	POST MILES TOTAL PROJECT	SHEET No.	TOTAL SHEETS
04	Ala	80	1.8/2.1	53	

REGISTERED CIVIL ENGINEER — DATE 6/10/09

PLANS APPROVAL DATE

REGISTERED PROFESSIONAL ENGINEER — RAMSEY J. HISSEN — No. C-39608 — Exp. 12/31/09 — CIVIL — STATE OF CALIFORNIA

THE STATE OF CALIFORNIA OR ITS OFFICERS OR AGENTS SHALL NOT BE RESPONSIBLE FOR THE ACCURACY OR COMPLETENESS OF SCANNED COPIES OF THIS PLAN SHEET.

BAY AREA TOLL AUTHORITY
101 EIGHTH STREET
OAKLAND, CA 94607

URS CORPORATION
55 SOUTH MARKET STREET
SUITE 1500
SAN JOSE, CA 95113-2332

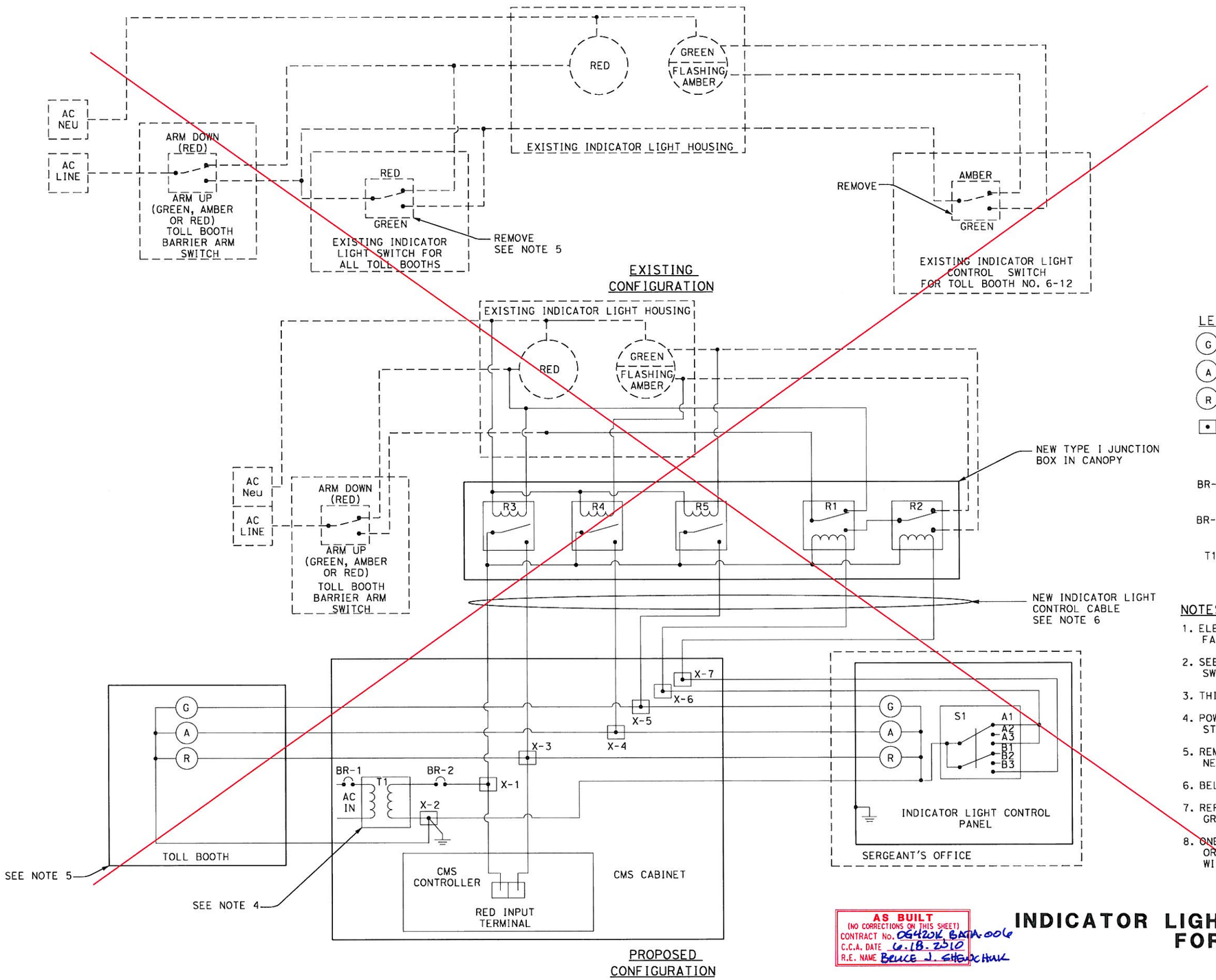

SWITCH POSITIONS
1 FLASHING AMBER
2 RED
3 GREEN

LEGEND

- (G) GREEN INDICATOR LED LIGHT, 120 VAC
- (A) AMBER INDICATOR LED LIGHT, 120 VAC
- (R) RED INDICATOR LED LIGHT, 120 VAC
- [•] CMS CABINET TERMINAL BLOCK X-B
  X = LANE NUMBER
  B = TERMINAL BLOCK NUMBER
- BR-1 3/4 AMP BREAKER, 120 VAC (1 PER CMS CABINET)
- BR-2 1/4 AMP BREAKER, 120 VAC (3 PER CMS CABINET - SEE NOTE 8)
- T1 CLASS 3, 100 WATT 1:1,120 VAC TRANSFORMER (1 PER CMS CABINET)

NOTES:

1. ELECTRICAL DIAGRAM SHOWS A SINGLE (ONE) FASTRAK LANE FOR SIMPLICITY.
2. SEE SHEET E-31 FOR INDICATOR LIGHT SWITCH CONSOLE DETAIL.
3. THIS DIAGRAM APPLIES TO LANES: 1-5, 13-16.
4. POWER TO TRANSFORMER FROM CMS CABINET POWER STRIP. ONE TRANSFORMER PER CMS CABINET.
5. REMOVE EXISTING SWITCH AND INSTALL NEW INDICATOR LED LIGHTS ON WALL BOX.
6. BELDEN 5506UE OR APPROVED EQUIVALENT.
7. REPLACE EXISTING GREEN LIGHT WITH NEW GREEN / FLASHING AMBER LIGHT.
8. ONE (1) 1/4 AMP BREAKER PER CMS CONTROLLER OR THREE (3) 1/4 AMP BREAKERS PER CMS CABINET WITH 3 CMS CONTROLLERS.

AS BUILT
(NO CORRECTIONS ON THIS SHEET)
CONTRACT No. 0G420K, BATA.006
C.C.A. DATE 6.18.2010
R.E. NAME BRUCE J. SHEVCHUK

INDICATOR LIGHT WIRING DIAGRAM FOR LANES 6-12

NO SCALE

E-28

THIS PLAN ACCURATE FOR ELECTRICAL WORK ONLY

STATE OF CALIFORNIA - DEPARTMENT OF TRANSPORTATION — Caltrans

CONSULTANT FUNCTIONAL SUPERVISOR: LARRY JONES

CALCULATED-DESIGNED BY | CHECKED BY | REVISED BY | DATE REVISED

LAST REVISION 00-00-00 | DATE PLOTTED => 8/30/2010 | TIME PLOTTED => 7:58:03 AM

BORDER LAST REVISED 4/11/2008 | RELATIVE BORDER SCALE IS IN INCHES 0 1 2 3 | USERNAME=> jason_vincent | DGN FILE=> I:\Projects\28645026\its\ORT\AS-BUILTS\E-28_new.dgn | CU 00000 | EA 0G420K

Dist	COUNTY	ROUTE	POST MILES TOTAL PROJECT	SHEET No.	TOTAL SHEETS
04	Ala	80	1.8/2.1	54	

REGISTERED CIVIL ENGINEER 6/10/09 DATE

PLANS APPROVAL DATE

REGISTERED PROFESSIONAL ENGINEER RAMSEY J. HISSEN No. C-39608 Exp. 12/31/09 CIVIL STATE OF CALIFORNIA

THE STATE OF CALIFORNIA OR ITS OFFICERS OR AGENTS SHALL NOT BE RESPONSIBLE FOR THE ACCURACY OR COMPLETENESS OF SCANNED COPIES OF THIS PLAN SHEET.

BAY AREA TOLL AUTHORITY
101 EIGHTH STREET
OAKLAND, CA 94607

URS CORPORATION
55 SOUTH MARKET STREET
SUITE 1500
SAN JOSE, CA 95113-2332

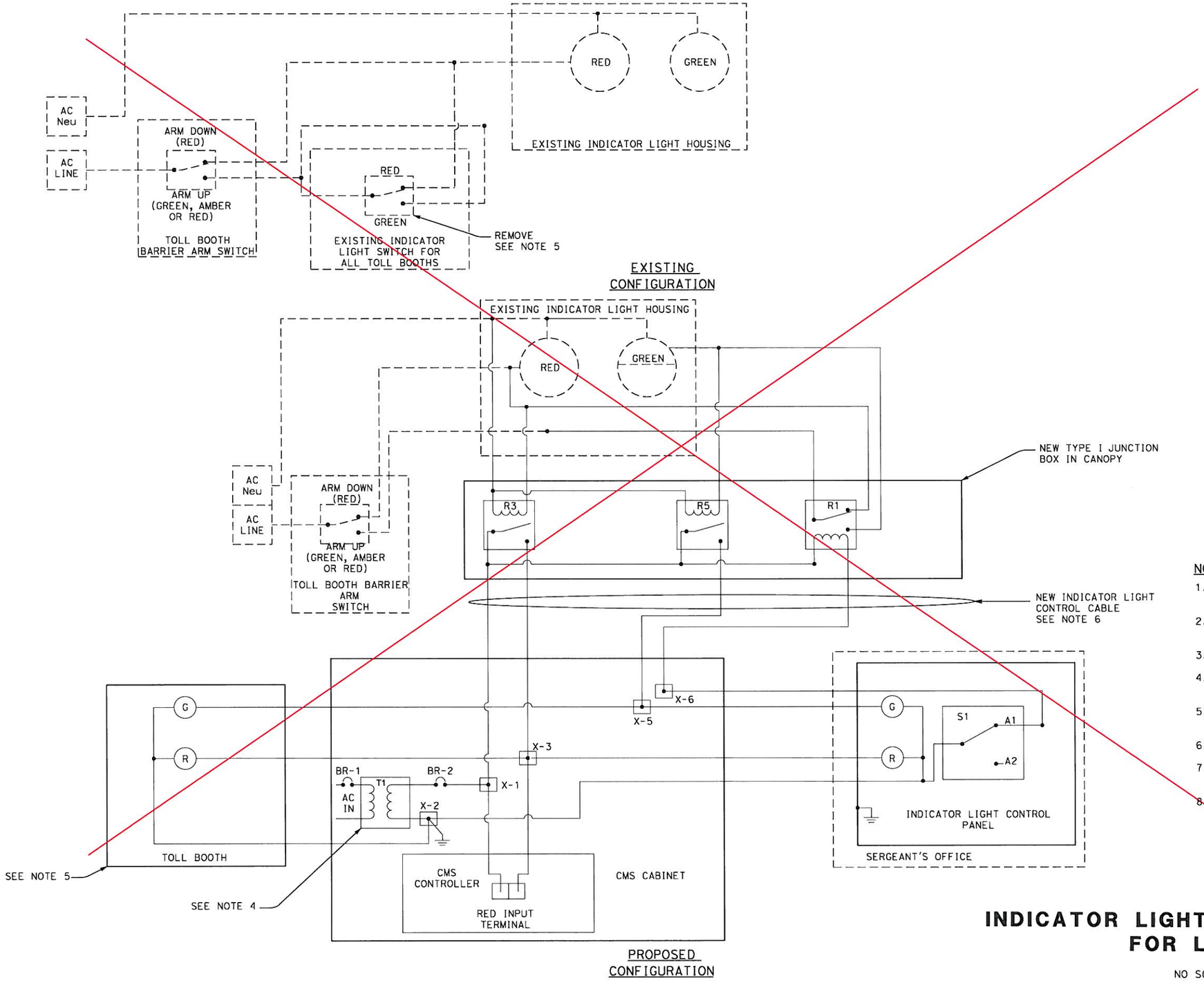

SWITCH POSITIONS
1 FLASHING AMBER
2 RED
3 GREEN

LEGEND

- (G) GREEN INDICATOR LED LIGHT, 120 VAC
- (A) AMBER INDICATOR LED LIGHT, 120 VAC
- (R) RED INDICATOR LED LIGHT, 120 VAC
- [•] CMS CABINET TERMINAL BLOCK X-B
  X = LANE NUMBER
  B = TERMINAL BLOCK NUMBER
- BR-1 3/4 AMP BREAKER, 120 VAC (1 PER CMS CABINET)
- BR-2 1/4 AMP BREAKER, 120 VAC (3 PER CMS CABINET - SEE NOTE 8)
- T1 CLASS 3, 100 WATT 1:1,120 VAC TRANSFORMER (1 PER CMS CABINET)

NOTES:

1. ELECTRICAL DIAGRAM SHOWS A SINGLE (ONE) FASTRAK LANE FOR SIMPLICITY.
2. SEE SHEET E-31 FOR INDICATOR LIGHT SWITCH CONSOLE DETAIL.
3. THIS DIAGRAM APPLIES TO LANES: 1-5, 13-16.
4. POWER TO TRANSFORMER FROM CMS CABINET POWER STRIP. ONE TRANSFORMER PER CMS CABINET.
5. REMOVE EXISTING SWITCH AND INSTALL NEW INDICATOR LED LIGHTS ON WALL BOX.
6. BELDEN 5506UE OR APPROVED EQUIVALENT.
7. REPLACE EXISTING GREEN LIGHT WITH NEW GREEN / FLASHING AMBER LIGHT.
8. ONE (1) 1/4 AMP BREAKER PER CMS CONTROLLER OR THREE (3) 1/4 AMP BREAKERS PER CMS CABINET WITH 3 CMS CONTROLLERS.

AS BUILT
(NO CORRECTIONS ON THIS SHEET)
CONTRACT No. 0G420K, BA70-004
C.C.A. DATE 6.18.2010
R.E. NAME BRUCE J. GHENCHUK

INDICATOR LIGHT WIRING DIAGRAM FOR LANE 17

NO SCALE

THIS PLAN ACCURATE FOR ELECTRICAL WORK ONLY

E-29

REVISED BY | DATE REVISED
CALCULATED-DESIGNED BY | CHECKED BY
CONSULTANT FUNCTIONAL SUPERVISOR: LARRY JONES
STATE OF CALIFORNIA - DEPARTMENT OF TRANSPORTATION
Caltrans

LAST REVISION 00-00-00 | DATE PLOTTED => 8/30/2010 | TIME PLOTTED => 7:58:12 AM

BORDER LAST REVISED 4/11/2008 | RELATIVE BORDER SCALE IS IN INCHES 0 1 2 3 | USERNAME=> jason_vincent | DGN FILE=> I:\Projects\28645026\its\ORT\AS-BUILTS\E-29_new.dgn | CU 00000 | EA 0G420K

Dist	COUNTY	ROUTE	POST MILES TOTAL PROJECT	SHEET No.	TOTAL SHEETS
04	Ala	80	1.8/2.1	55	

REGISTERED CIVIL ENGINEER — DATE 6/10/09

PLANS APPROVAL DATE

REGISTERED PROFESSIONAL ENGINEER — RAMSEY J. HISSEN — No. C-39608 — Exp. 12/31/09 — CIVIL — STATE OF CALIFORNIA

THE STATE OF CALIFORNIA OR ITS OFFICERS OR AGENTS SHALL NOT BE RESPONSIBLE FOR THE ACCURACY OR COMPLETENESS OF SCANNED COPIES OF THIS PLAN SHEET.

BAY AREA TOLL AUTHORITY
101 EIGHTH STREET
OAKLAND, CA 94607

URS CORPORATION
55 SOUTH MARKET STREET
SUITE 1500
SAN JOSE, CA 95113-2332

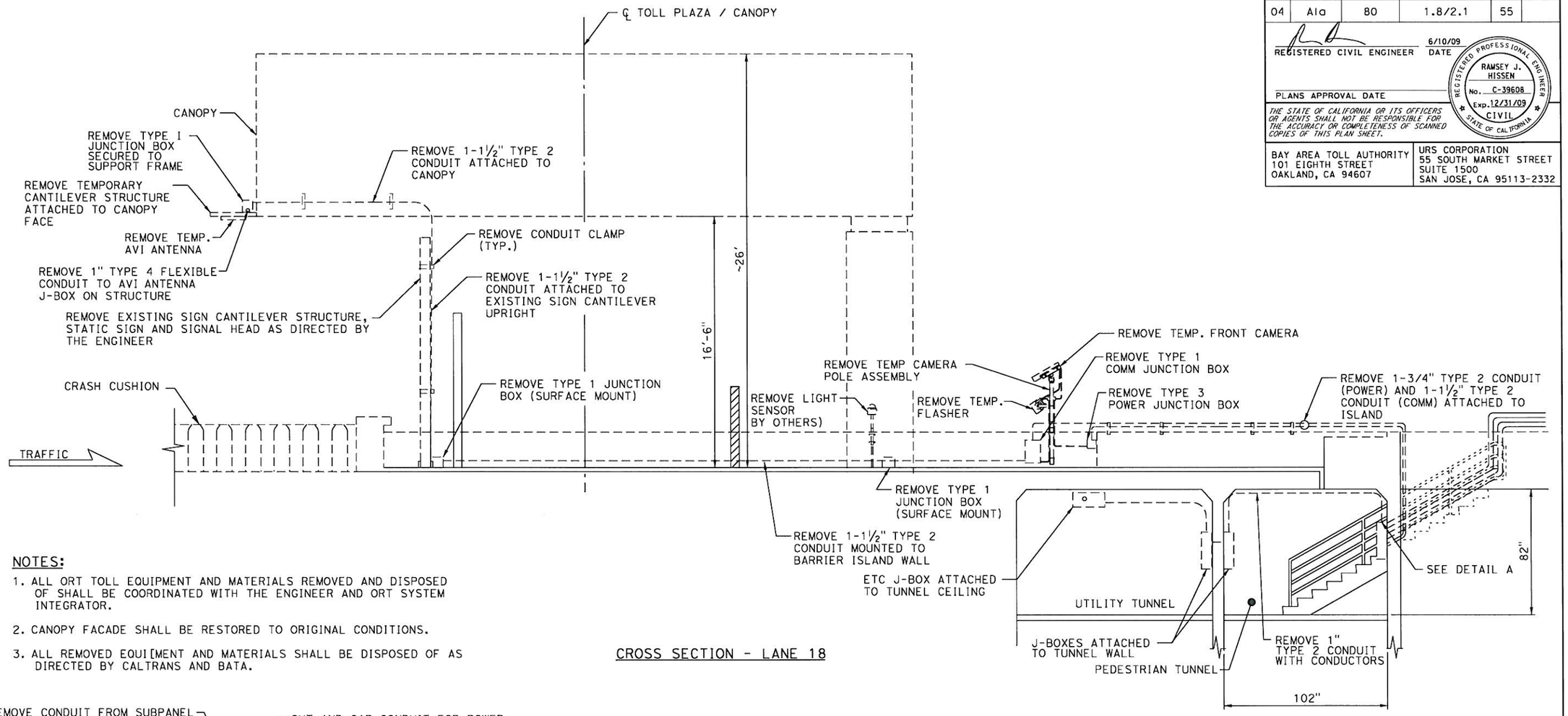

CROSS SECTION - LANE 18

NOTES:

1. ALL ORT TOLL EQUIPMENT AND MATERIALS REMOVED AND DISPOSED OF SHALL BE COORDINATED WITH THE ENGINEER AND ORT SYSTEM INTEGRATOR.
2. CANOPY FACADE SHALL BE RESTORED TO ORIGINAL CONDITIONS.
3. ALL REMOVED EQUIPMENT AND MATERIALS SHALL BE DISPOSED OF AS DIRECTED BY CALTRANS AND BATA.

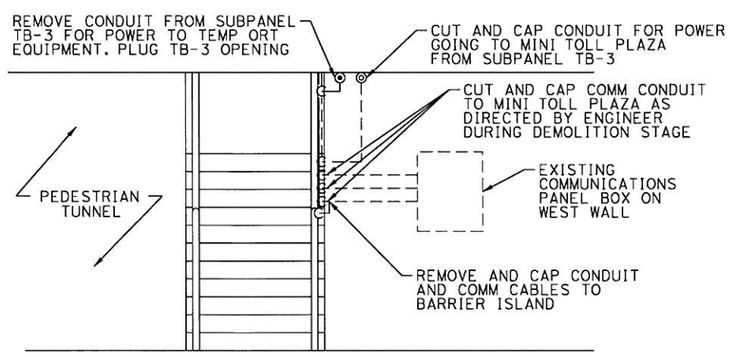

DETAIL A

AS BUILT
(NO CORRECTIONS ON THIS SHEET)
CONTRACT No. 04420K, BATA-006
C.C.A. DATE 6.18.2010
R.E. NAME BRUCE J. SHENCHUK

LANE LEVEL-ISLAND LANE 17/18 CONDUIT ROUTING

NO SCALE

E-30

THIS PLAN ACCURATE FOR ELECTRICAL WORK ONLY

STATE OF CALIFORNIA - DEPARTMENT OF TRANSPORTATION — Caltrans

CONSULTANT FUNCTIONAL SUPERVISOR: LARRY JONES

CALCULATED-DESIGNED BY | CHECKED BY | REVISED BY | DATE REVISED

LAST REVISION 00-00-00 | DATE PLOTTED => 8/30/2010 | TIME PLOTTED => 7:58:22 AM

BORDER LAST REVISED 4/11/2008 | RELATIVE BORDER SCALE IS IN INCHES 0 1 2 3 | USERNAME=> jason_vincent | DGN FILE=> I:\Projects\28645026\its\ORT\AS-BUILTS\E-30_new.dgn | CU 00000 | EA 0G420K

Dist	COUNTY	ROUTE	POST MILES TOTAL PROJECT	SHEET No.	TOTAL SHEETS
04	Ala	80	1.8/2.1	56	

REGISTERED CIVIL ENGINEER — DATE 6/10/09

PLANS APPROVAL DATE

REGISTERED PROFESSIONAL ENGINEER — RAMSEY J. HISSEN — No. C-39608 — Exp. 12/31/09 — CIVIL — STATE OF CALIFORNIA

THE STATE OF CALIFORNIA OR ITS OFFICERS OR AGENTS SHALL NOT BE RESPONSIBLE FOR THE ACCURACY OR COMPLETENESS OF SCANNED COPIES OF THIS PLAN SHEET.

BAY AREA TOLL AUTHORITY
101 EIGHTH STREET
OAKLAND, CA 94607

URS CORPORATION
55 SOUTH MARKET STREET
SUITE 1500
SAN JOSE, CA 95113-2332

NOTES:

1. SIZE OF CONSOLE SWITCH PANEL WILL BE FIELD DETERMINED BY CONTRACTOR TO ACCOMMODATE NUMBER OF LANES AND EXISTING CONSOLE DIMENSIONS.
2. SEE SHEET E-3 FOR LOCATION.
3. SEE SHEETS E-27 TO E-29 FOR PROPOSED WIRING CONFIGURATION.

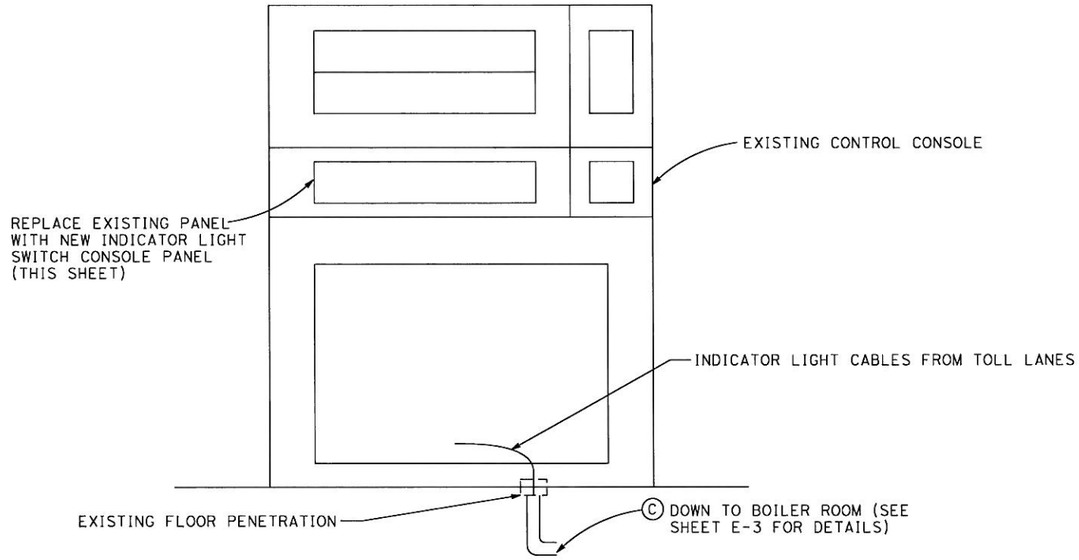

EXISTING SWITCH CONSOLE
(IN SERGEANT'S ROOM)

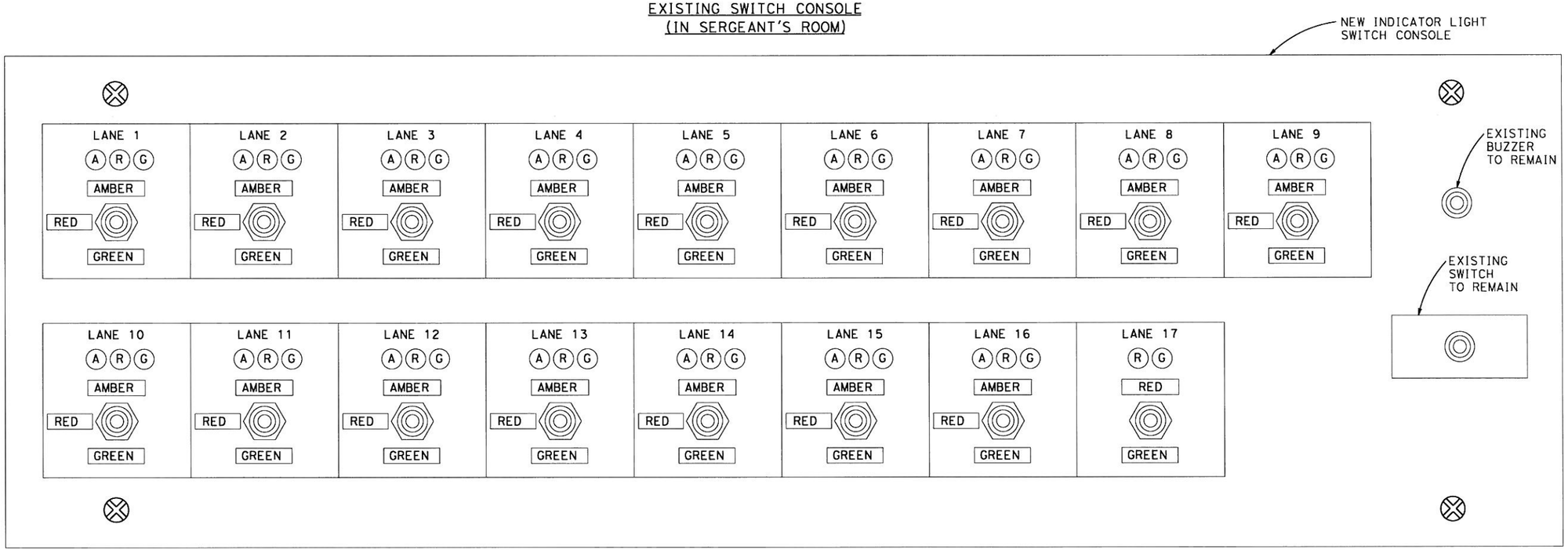

NEW INDICATOR LIGHT SWITCH CONSOLE PANEL

INDICATOR LIGHT SWITCH CONSOLE PANEL

NO SCALE

AS BUILT
(NO CORRECTIONS ON THIS SHEET)
CONTRACT No. 0G420K, BATA-0006
C.C.A. DATE 6.18.2010
R.E. NAME BRUCE J. SHEWCHUK

THIS PLAN ACCURATE FOR ELECTRICAL WORK ONLY

E-31

REVISED BY | DATE REVISED
CALCULATED-DESIGNED BY | CHECKED BY
CONSULTANT FUNCTIONAL SUPERVISOR: LARRY JONES

STATE OF CALIFORNIA - DEPARTMENT OF TRANSPORTATION
Caltrans

LAST REVISION 00-00-00 | DATE PLOTTED => 8/30/2010 | TIME PLOTTED => 7:58:30 AM

BORDER LAST REVISED 4/11/2008 | RELATIVE BORDER SCALE IS IN INCHES 0 1 2 3 | USERNAME=> jason_vincent | DGN FILE=> I:\Projects\28645026\its\ORT\AS-BUILTS\E-31_new.dgn | CU 00000 | EA 0G420K

Dist	COUNTY	ROUTE	POST MILES TOTAL PROJECT	SHEET No.	TOTAL SHEETS
04	Ala	80	1.8/2.1	57	

REGISTERED CIVIL ENGINEER — DATE 6/10/09

PLANS APPROVAL DATE

REGISTERED PROFESSIONAL ENGINEER — RAMSEY J. HISSEN — No. C-39608 — Exp. 12/31/09 — CIVIL — STATE OF CALIFORNIA

THE STATE OF CALIFORNIA OR ITS OFFICERS OR AGENTS SHALL NOT BE RESPONSIBLE FOR THE ACCURACY OR COMPLETENESS OF SCANNED COPIES OF THIS PLAN SHEET.

BAY AREA TOLL AUTHORITY
101 EIGHTH STREET
OAKLAND, CA 94607

URS CORPORATION
55 SOUTH MARKET STREET
SUITE 1500
SAN JOSE, CA 95113-2332

LEGEND

LL - LANE LOOP
LTC - LANE TOLL COMM
LCC - LANE CMS COMM
LTP - LANE TOLL POWER
LCP - LANE CMS POWER
LC - LANE CONDUIT
LT - LANE TO TUNNEL CONDUIT

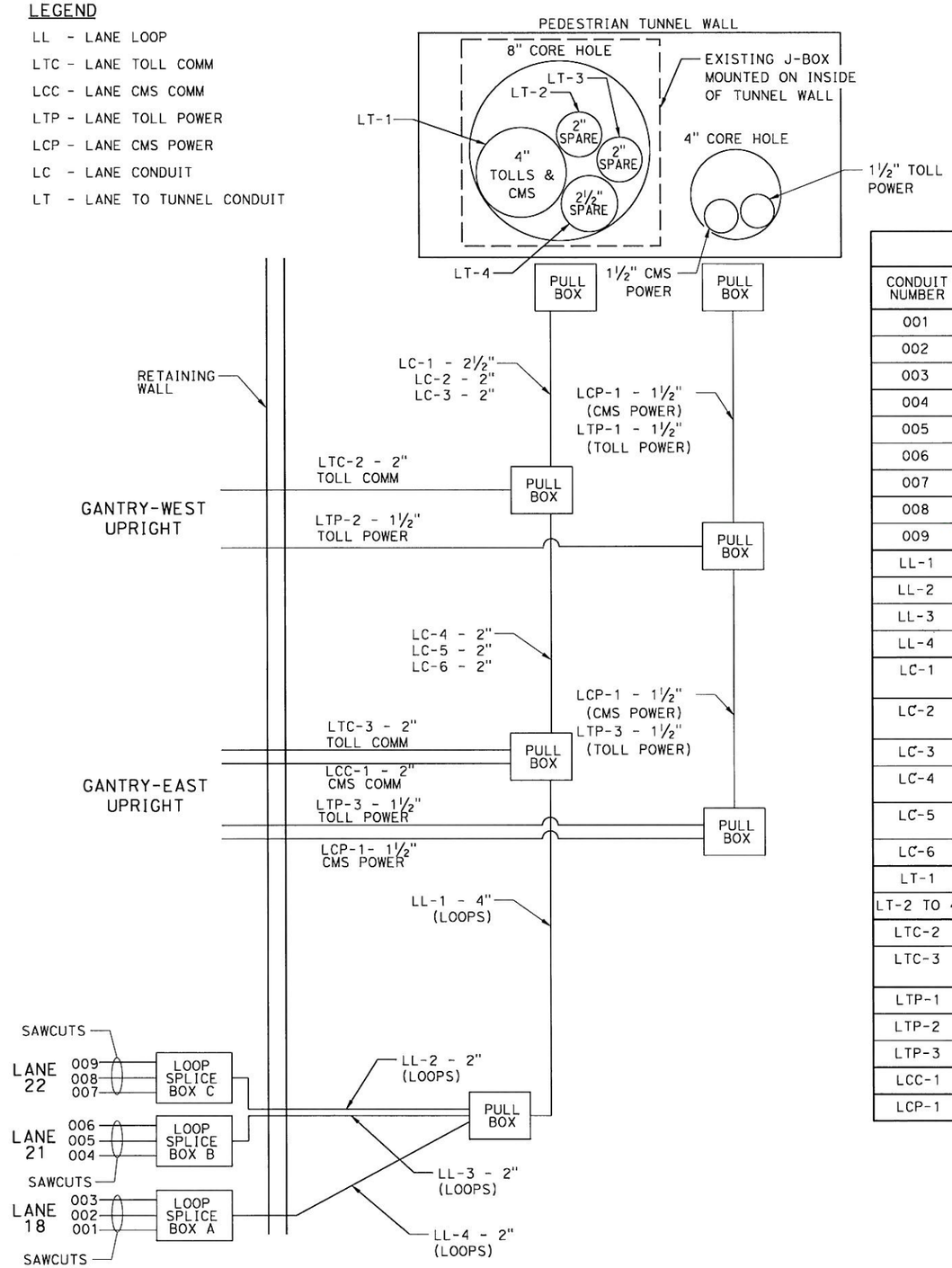

NOTES:

1. ALL ORT (TOLL) COMM AND POWER CABLING WILL BE INSTALLED BY OTHERS.
2. CONTRACTOR TO INSTALL ALL CMS COMM AND POWER CABLING.
3. ALL POWER CONDUCTORS SHALL BE COPPER AND RATED 600 VOLT, TYPE THHN, 90 DEGREE C.
4. CMS COMMUNICATIONS (COMM) CABLES WILL BE PROVIDED BY CMS MANUFACTURER (VERMAC). CONTRACTOR SHALL WORK CLOSELY WITH CMS MANUFACTURER.

LANE LEVEL CONDUIT SCHEDULE

CONDUIT NUMBER	CONDUIT AND CONDUCTOR SIZE	DESCRIPTION
001	SAWCUT, (2) ANIXTER 6M-1401-03-1000 (14AWG)	LOOP WIRE (LANE 18 ENTRY LOOP)
002	SAWCUT, (8) ANIXTER 6M-1401-03-1000 (14AWG)	LOOP WIRE (LANE 18 AXLE LOOPS)
003	SAWCUT, (4) ANIXTER 6M-1401-03-1000 (14AWG)	LOOP WIRE (LANE 18 EXIT AND TRIGGER LOOPS)
004	SAWCUT, (2) ANIXTER 6M-1401-03-1000 (14AWG)	LOOP WIRE (LANE 21 ENTRY LOOP)
005	SAWCUT, (8) ANIXTER 6M-1401-03-1000 (14AWG)	LOOP WIRE (LANE 21 AXLE LOOPS)
006	SAWCUT, (4) ANIXTER 6M-1401-03-1000 (14AWG)	LOOP WIRE (LANE 21 EXIT AND TRIGGER LOOPS)
007	SAWCUT, (2) ANIXTER 6M-1401-03-1000 (14AWG)	LOOP WIRE (LANE 22 ENTRY LOOP)
008	SAWCUT, (8) ANIXTER 6M-1401-03-1000 (14AWG)	LOOP WIRE (LANE 22 AXLE LOOPS)
009	SAWCUT, (4) ANIXTER 6M-1401-03-1000 (14AWG)	LOOP WIRE (LANE 22 EXIT AND TRIGGER LOOPS)
LL-1	(21) BELDEN 8720 (14 AWG)	LOOP LEAD-IN CABLE (LANES 18, 21, 22)
LL-2	(7) BELDEN 8720 (14 AWG)	LOOP LEAD-IN CABLE (LANE 22)
LL-3	(7) BELDEN 8720 (14 AWG)	LOOP LEAD-IN CABLE (LANE 21)
LL-4	(7) BELDEN 8720 (14 AWG)	LOOP LEAD-IN CABLE (LANE 18)
LC-1	(3)PULNIX COMPOSITE, (3)4-FIBER MMFO, (1) 3-PAIR (14 AWG) CONDUCTORS, (2)PULNIX 1372, (7) BELDEN 8720 (14 AWG)	3 REAR CAMERAS, 3 AVI ANTENNA COMM, 3 AVI ANTENNA POWER (15 VDC), 2 LIGHT SENSORS, 7 LOOP LEAD-IN CABLES (LANE 18)
LC-2	(3)PULNIX COMPOSITE, (1)PULNIX 1372, (3) RS-422 (22 AWG) CABLES	3 FRONT CAMERAS, 1 LIGHT SENSOR, 3 CMS PANELS
LC-3	(14) BELDEN 8720 (14 AWG)	7 LOOP LEAD-IN CABLE (LANE 21), 7 LOOP LEAD-IN CABLE (LANE 22)
LC-4	(3) PULNIX COMPOSITE, (1) PULNIX 1372, (3) RS-422 (22 AWG) CABLES	3 REAR CAMERAS, 1 LIGHT SENSOR, 3 CMS PANELS
LC-5	(3) 4-FIBER MMFO, (1) 3-PAIR (14 AWG) CONDUCTORS, (7) BELDEN 8720 (14 AWG)	3 AVI ANTENNA COMM, 3 AVI ANATENNA POWER (15 VDC), 7 LOOP LEAD-IN CABLES (LANE 18)
LC-6	(14) BELDEN 8720 (14 AWG)	7 LOOP LEAD-IN CABLE (LANE 21), 7 LOOOP LEAD-IN CABLE (LANE 22)
LT-1	ALL CABLES IN LC-1, LC-2 AND LC-3	TOLLS AND CMS COMM
LT-2 TO 4	SPARE	---
LTC-2	(3)PULNIX COMPOSITE, (1)PULNIX 1372	FRONT CAMERAS (COMM & DC POWER), LIGHT SENSOR COMM & DC POWER
LTC-3	(3)PULNIX COMPOSITE, (3)4-FIBER MMFO, (1) 3-PAIR #14 AWG AVI POWER(DC), (1)PULNIX 1372	REAR CAMERAS (COMM & DC POWER), AVI CAMM & DC POWER, LIGHT SENSOR COMM & DC POWER
LTP-1	(4)#12, (2)#12G	FLASHERS ON GANTRIES, 120VAC POWER (FROM TB3 IN PED. TUNNEL)
LTP-2	(2)#12, (1)#12G	FLASHERS (WEST GANTRY) 120VAC POWER
LTP-3	(2)#12, (1)#12G	FLASHERS (EAST GANTRY) 120VAC POWER
LCC-1	(3)RS-422 COMM CABLES (#22 AWG)	CMS PANEL COMM (FROM CMS CABINET)
LCP-1	(6)#14, (3)#14G	CMS PANEL POWER (FROM MPE1 IN PED. TUNNEL)

AS BUILT
(NO CORRECTIONS ON THIS SHEET)
CONTRACT No. 0G420K, 8ATA-006
C.C.A. DATE 6-18-2010
R.E. NAME BRUCE J. SHENCHUK

CONDUIT ROUTING ONE LINE DIAGRAM & SCHEDULE (LANE LEVEL)

NO SCALE

E-32

THIS PLAN ACCURATE FOR ELECTRICAL WORK ONLY

STATE OF CALIFORNIA - DEPARTMENT OF TRANSPORTATION
Caltrans
CONSULTANT FUNCTIONAL SUPERVISOR: LARRY JONES
CALCULATED-DESIGNED BY
CHECKED BY
REVISED BY
DATE REVISED

LAST REVISION 00-00-00
DATE PLOTTED => 8/30/2010
TIME PLOTTED => 7:58:40 AM

Dist	COUNTY	ROUTE	POST MILES TOTAL PROJECT	SHEET No.	TOTAL SHEETS
04	Ala	80	1.8/2.1	58	

REGISTERED CIVIL ENGINEER — DATE 6/10/09

PLANS APPROVAL DATE

REGISTERED PROFESSIONAL ENGINEER — RAMSEY J. HISSEN — No. C-39608 — Exp. 12/31/09 — CIVIL — STATE OF CALIFORNIA

THE STATE OF CALIFORNIA OR ITS OFFICERS OR AGENTS SHALL NOT BE RESPONSIBLE FOR THE ACCURACY OR COMPLETENESS OF SCANNED COPIES OF THIS PLAN SHEET.

BAY AREA TOLL AUTHORITY
101 EIGHTH STREET
OAKLAND, CA 94607

URS CORPORATION
55 SOUTH MARKET STREET
SUITE 1500
SAN JOSE, CA 95113-2332

TUNNEL LEVEL CONDUIT SCHEDULE

CONDUIT NUMBER	CONDUIT AND CONDUCTOR SIZE	DESCRIPTION
TTC-1	(21) BELDEN 8720 (14 AWG)	LOOP LEAD-IN CABLES (FROM WIREWAY)
TTC-2	(6)PULNIX COMPOSITE, (2)PULNIX 1372	LOOP LEAD-IN CABLES, CAMERA COMPOSITE CABLES, LIGHT SENSOR CABLES (FROM WIREWAY)
TTC-3	(3)4-FIBER MMFO, (1)3-PAIR #14 AWG AVI POWER(DC)	AVI COMM & POWER
TTC-4	UPS POWER, MISC (TBD BY TOLL SYSTEMS INTEGRATOR)	CABINET TO CABINET CABLING
TCC-1	(3)RS-422 COMM CABLES (#22 AWG)	TO/FROM CMS PANELS ON GANTRIES
TCC-2	(1)12-FIBER SMFO (TYPE D CABLE)	TO/FROM EXISTING CMS CABINET (LANES 2/3) IN UTILITY TUNNEL
TTP-1	(4)#12, (2)#12G	TO FLASHERS ON GANTRIES (FROM TB-3)
TTP-2	(2)#12, (1)#12G	TO ZEC CABINET (FROM TB-3)
TTP-3	(2)#12, (1)#12G	TO AVI CABINET (FROM TB-3)
TCP-1	(6)#14, (3)#14G	TO CMS PANELS ON EAST GANTRY
TCP-2	(2)#12, (1)#12G	TO CMS CABINET (FROM MPE-1)
LT-1	ALL CABLES IN LC-1, LC-2 AND LC-3 ON SHEET E-22	
LT-2 TO 4	SPARE	

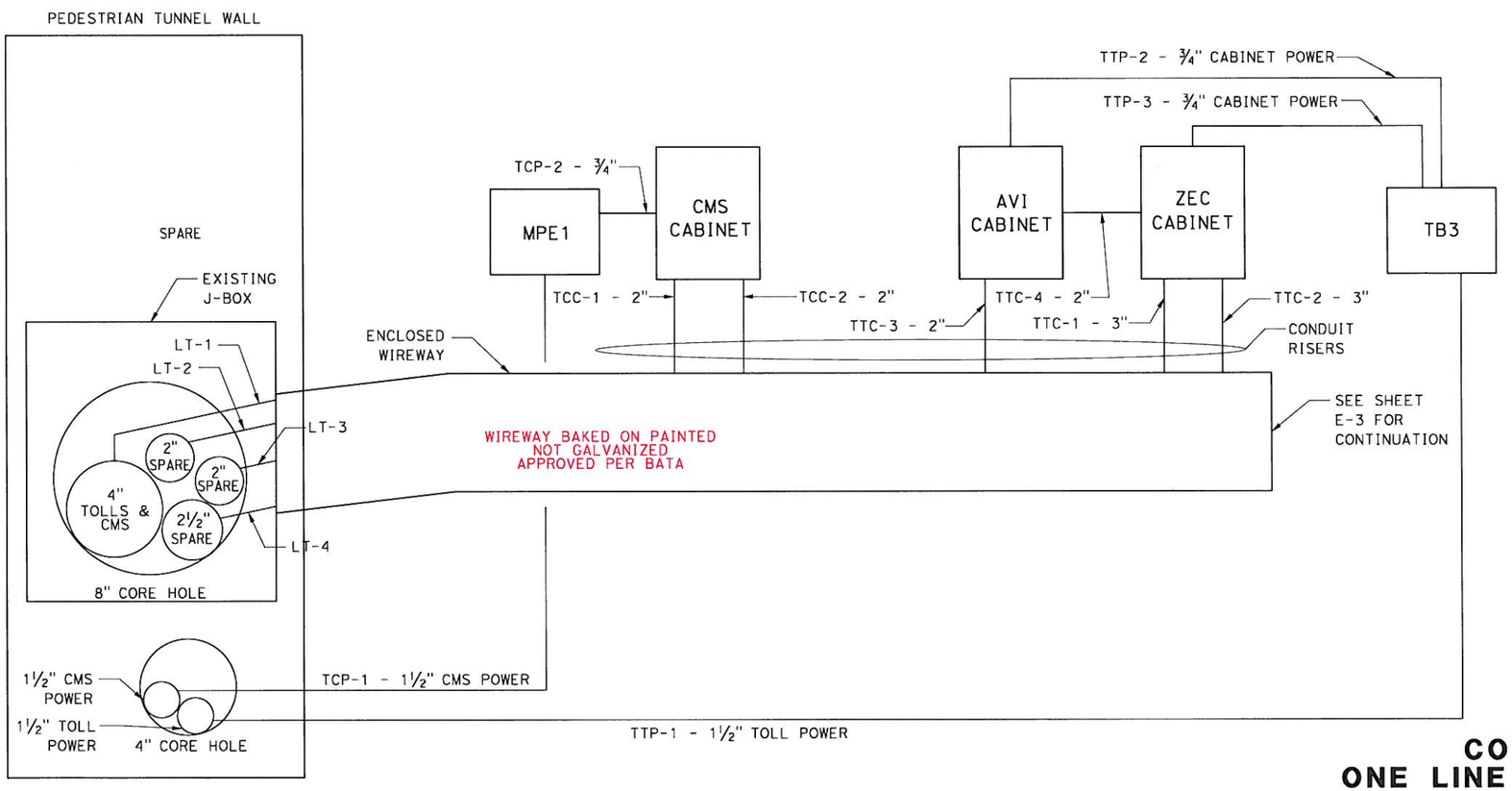

LEGEND

TTP - TUNNEL TOLL POWER
TCC - TUNNEL CMS COMM
TCP - TUNNEL CMS POWER
TTC - TUNNEL TOLL COMM
LT - LANE TO TUNNEL CONDUIT

NOTES:

1. ALL ORT (TOLL) COMM AND POWER CABLING WILL BE INSTALLED BY OTHERS EXCEPT FOR LANES 21 AND 22 LOOPS.
2. CONTRACTOR TO INSTALL ALL CMS COMM AND POWER CABLING.
3. ALL POWER CONDUCTORS SHALL BE COPPER AND RATED 600-VOLT, TYPE THHN, 90 DEGREE C.
4. CMS COMMUNICATIONS (COMM) CABLES WILL BE PROVIDED BY CMS MANUFACTURER (VERMAC). CONTRACTOR SHALL WORK CLOSELY WITH CMS MANUFACTURER.

AS BUILT
CONTRACT No. 0G420K BATA-00K
C.C.A. DATE 6-18-2010
R.E. NAME BRUCE A. SHEARCHUK

CONDUIT ROUTING
ONE LINE DIAGRAM & SCHEDULE
(PEDESTRIAN TUNNEL LEVEL)

NO SCALE

THIS PLAN ACCURATE FOR ELECTRICAL WORK ONLY

E-33

REVISED BY | DATE REVISED
CALCULATED-DESIGNED BY | CHECKED BY
CONSULTANT FUNCTIONAL SUPERVISOR: LARRY JONES
STATE OF CALIFORNIA - DEPARTMENT OF TRANSPORTATION — Caltrans

LAST REVISION 00-00-00 | DATE PLOTTED => 8/30/2010 | TIME PLOTTED => 7:58:51 AM

BORDER LAST REVISED 4/11/2008 | RELATIVE BORDER SCALE IS IN INCHES 0 1 2 3 | USERNAME=> jason_vincent | DGN FILE=> I:\Projects\28645026\its\ORT\AS-BUILTS\E-33_new.dgn | CU 00000 | EA 0G420K