DIST.	COUNTY	ROUTE	POST MILES—TOTAL PROJECT	SHEET NO.	TOTAL SHEETS
04	Ala.	80	2.0	60	181

DESIGN ENGINEER — REGISTERED CIVIL ENGINEER NUMBER 13175

DATE APPROVED March 25 1985

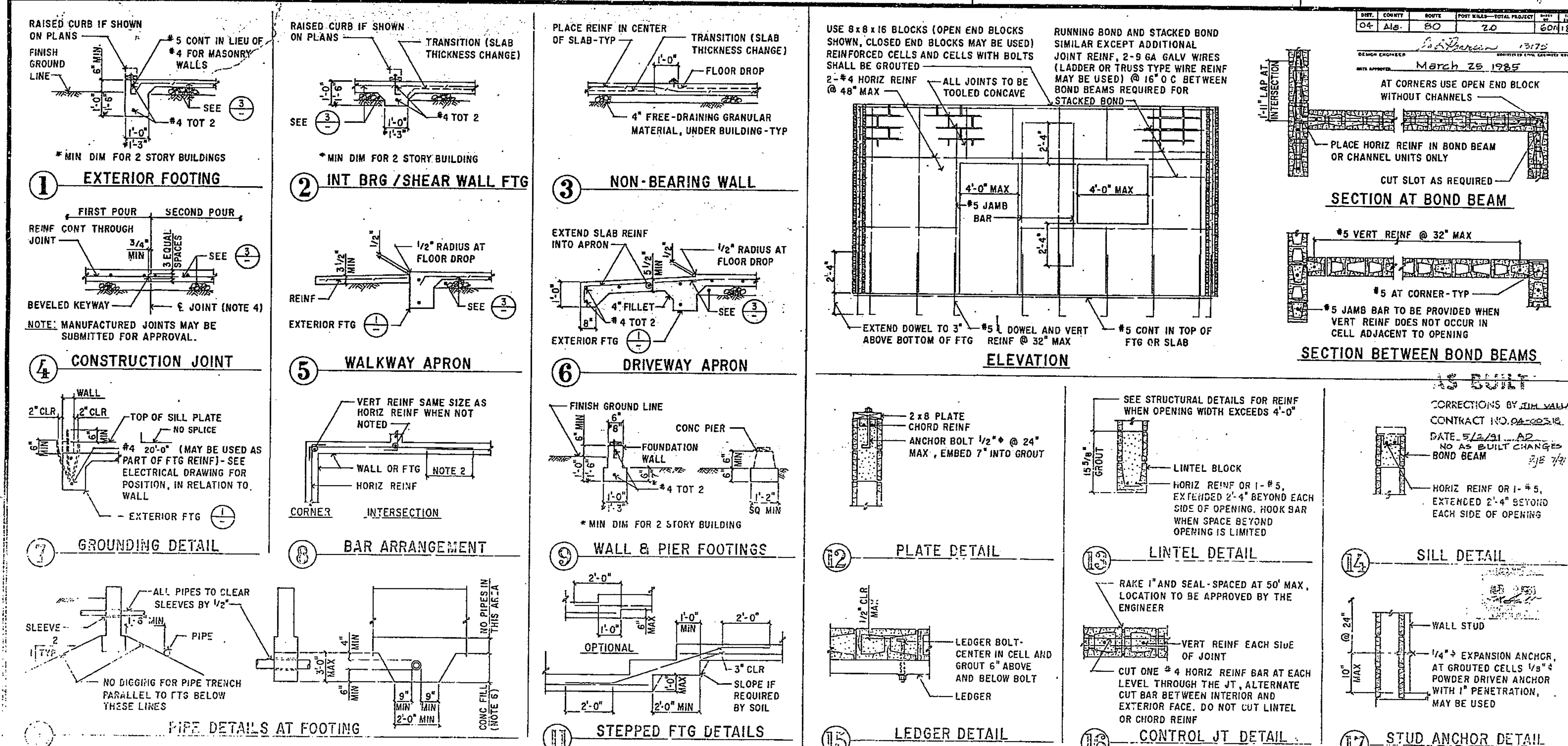

AS BUILT
CORRECTIONS BY JIM VALLAS
CONTRACT NO. 04-00318
DATE 5/2/91 AD
NO AS BUILT CHANGES

AS BUILT PLANS
Contract No. 04-036804
Date Completed 5-14-91
Document No.

CONCRETE AND CONCRETE REINFORCEMENT NOTES

1. [illegible] SHALL BE PROVIDED FOR REINFORCEMENT: MINIMUM COVER, INCHES [illegible]

2. SPLICES IN CONTINUOUS REINFORCEMENT AS IN WALLS, WALL FOOTINGS, ETC, NO. 8 OR SMALLER SHALL HAVE A LAP OF 45 DIAMETERS AND THE SPLICES IN ADJACENT BARS SHALL NOT BE LESS THAN 5'-0" APART. VERTICAL WALL BARS SHALL BE SPLICED AT OR NEAR FLOOR LINES. CONTINUOUS BARS IN SPANDRELS, WALL BEAMS, ETC. SHALL LAP TOP BARS AT CENTER OF SPAN, BOTTOM BARS AT SUPPORTS.

3. SPLICES OF WELDED PLAIN WIRE FABRIC SHALL BE SUCH THAT THE OVERLAP MEASURED BETWEEN [illegible]

4. [illegible]

5. [illegible] #4 @ 16 EACH WAY OR 6x6 – W4.0xW4.0 OR EQUIVALENT FABRIC; #4 @ 16 EACH WAY OR 4x4 – W4.0xW4.0 OR EQUIVALENT FABRIC

6. CONCRETE FILL TO BE PLACED BEFORE FOOTING IS POURED. MAKE SAME WIDTH AS FOOTING AND FULL WIDTH OF PIPE TRENCH. CONCRETE FILL NOT REQUIRED FOR PIPES LESS THAN 2" DIAMETER OR FOR PIPES MORE THAN 3'-0" BELOW BOTTOM OF FOOTING.

MASONRY AND MASONRY REINFORCEMENT NOTES

1. ALL VERTICAL REINFORCEMENT SHALL BE CENTERED IN BLOCK UNLESS SHOWN OTHERWISE. THE MINIMUM COVERAGE OF OTHER REINFORCEMENT FROM THE EXPOSED SURFACE SHALL BE AS FOLLOWS:
   A. EXPOSED TO EARTH OR WEATHER - 2 INCHES
   B. NOT EXPOSED TO EARTH OR WEATHER - ONE BAR DIAMETER BUT NOT LESS THAN [illegible]
   C. [illegible]

2. [illegible]

3. [illegible]

4. [illegible]

5. SEE ARCHITECTURAL AND MECHANICAL DRAWINGS FOR OFFSETS, SIZES AND LOCATIONS OF DUCTS, WALL OPENINGS, VENTS AND OTHER DETAILS NOT SHOWN ON STRUCTURAL DRAWINGS.

6. PIPES SHALL NOT BE EMBEDDED IN ANY MASONRY WALL EXCEPT WHEN SHOWN ON PLANS OR AS APPROVED BY THE ENGINEER.

7. ALL ANCHORS, BOLTS, REGLETS, DOWELS AND OTHER MISCELLANEOUS ITEMS TO BE CAST IN THE WALL SHALL BE FIRMLY SECURED IN PLACE BEFORE GROUTING. [illegible]

8. RECESSES FOR ELECTRICAL PANELS OR FIXTURES SHALL BE FRAMED AS FOR OPENINGS [illegible] OPENINGS ALL CELLS ADJACENT TO THE RECESS SHALL BE SOLIDLY FILLED WITH GROUT.

9. EQUIVALENT DETAILS MAY BE SUBMITTED FOR APPROVAL.

NOTE: SPECIFIC DETAILS OR NOTES ON OTHER SHEETS SHALL PREVAIL OVER STANDARD DETAILS AND NOTES ON THIS SHEET. REFER TO ARCHITECTURAL SHEETS FOR ABBREVIATIONS.

STANDARD DRAWING

CONTRACT CHANGE ORDER NO. 11
SHEET 13 OF 152

State of CALIFORNIA
DEPARTMENT OF TRANSPORTATION

STRUCTURES-DESIGN

SFOBB TOLL PLAZA MODIFICATIONS
CONCRETE & MASONRY STANDARD

SHEET S-1

ORIGINAL SCALE IN INCHES FOR REDUCED PLANS 0 1 2 3

I HEREBY CERTIFY THAT THIS IS A TRUE AND ACCURATE COPY OF THE ABOVE DOCUMENT TAKEN UNDER MY DIRECTION AND CONTROL ON THIS DATE IN SACRAMENTO, CALIFORNIA PURSUANT TO AUTHORIZATION BY THE DIRECTOR OF TRANSPORTATION

29X

This sheet replaces sheet no. 61 of 181 of plan approved March 25, 1985.

DIST.	COUNTY	ROUTE	POST MILES—TOTAL PROJECT	SHEET	TOTAL SHEETS
04	Ala	80	2.2	61	181

DESIGN ENGINEER: [illegible] DATE APPROVED: [illegible]

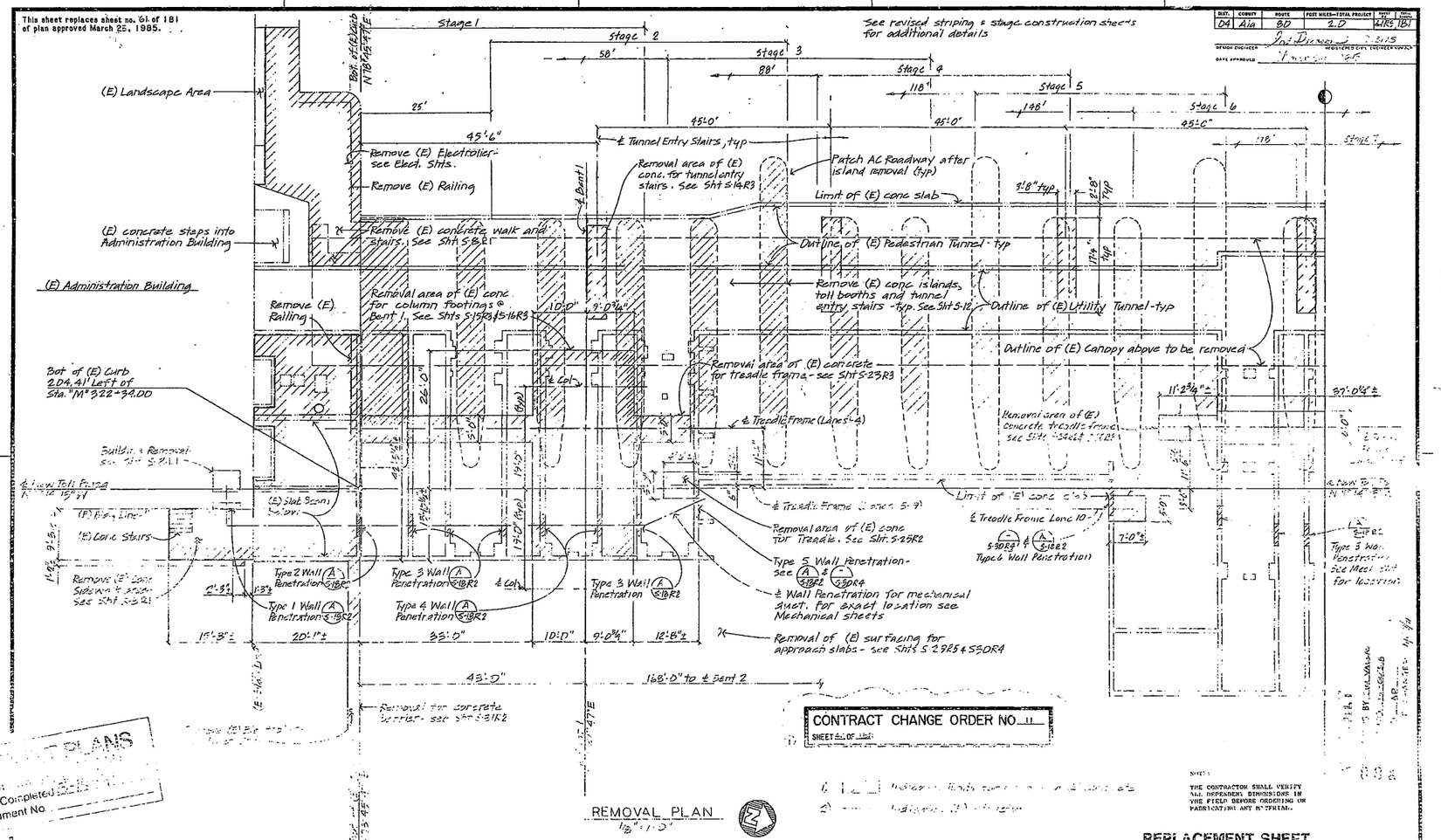

REMOVAL PLAN
1/8" = 1'-0"

REPLACEMENT SHEET

DESIGN			State of CALIFORNIA DEPARTMENT OF TRANSPORTATION	DIVISION OF STRUCTURES STRUCTURE DESIGN
DETAILS				
QUANTITIES				

BRIDGE NO. 33M0787 POST MILE [illegible] LIC. NO. C 43049 REGISTERED CIVIL ENGINEER

SFOBB TOLL PLAZA MODIFICATIONS
CONCRETE REMOVAL PLAN I

SHEET S-2 R3

ORIGINAL SCALE IN INCHES FOR REDUCED PLANS 0 1 2 3

CU [illegible] WO [illegible]

Contract Plans
Date Completed [illegible]
Document No. [illegible]

I HEREBY CERTIFY THAT THIS IS A TRUE AND ACCURATE COPY OF THE ABOVE DOCUMENT TAKEN UNDER MY DIRECTION AND CONTROL ON THIS DATE IN SACRAMENTO, CALIFORNIA PURSUANT TO AUTHORIZATION BY THE DIRECTOR OF TRANSPORTATION.

29X

This sheet replaces sheet no. 62 of 161 of plan approved March 25, 1985.

DIST.	COUNTY	ROUTE	POST MILES—TOTAL PROJECT	SHEET NO.	TOTAL SHEETS
04	Ala	80	2.0	62	161

DESIGN ENGINEER [illegible] PROJECT ENGINEER

DATE APPROVED March 25, 1985

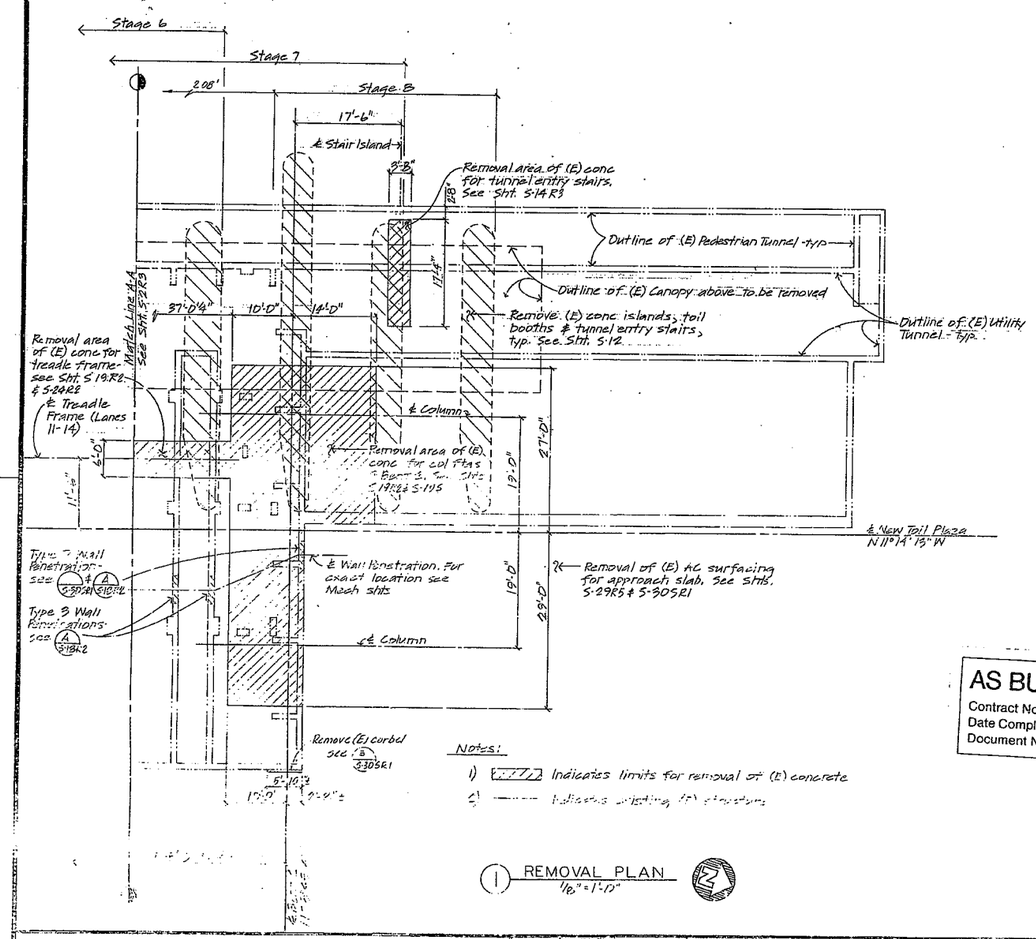

Notes:

1) Indicates limits for removal of (E) concrete

2) Indicates existing (E) structure

1 REMOVAL PLAN
1/8" = 1'-0"

2

DESIGN NOTES

DESIGN: UNIFORM BUILDING CODE 1979 EDITION

LOADS: ROOF LIVE LOAD: 20 psf
APPROACH SLAB LIVE LOAD HS20-44 & ALTERNATIVE & PERMIT DESIGN LOAD
RESULTANT WIND PRESSURE 20 psf
SEISMIC ZONE 4

STRUCTURAL STEEL: (WORKING STRESS DESIGN)

fy = 36,000 psi (ALL STEEL EXCEPT STRUCTURAL TUBING)
fy = 46,000 psi (STRUCTURAL TUBING)

REINFORCED CONCRETE:

(WORKING STRESS DESIGN - RECONSTRUCTION OF EXISTING STRUCTURE AND APPROACH SLABS)

fc = 1,300 psi
f'c = 3,250 psi
fs = 24,000 psi

(ULTIMATE STRENGTH DESIGN - BENTS 1 & 2)

f'c = 5,000 psi
fy = 60,000 psi

PRESTRESSED CONCRETE PILES:

70 TON DESIGN SERVICE LOADING

AS BUILT PLANS
Contract No. 04-036804
Date Completed 5-14-91
Document No.

AS BUILT
CORRECTIONS BY JIM VALLAS
CONTRACT NO. 04-036804
DATE 5/2/91 AD
( ) AS BUILT CHANGES

NOTE:
THE CONTRACTOR SHALL VERIFY ALL DEPENDENT DIMENSIONS IN THE FIELD BEFORE ORDERING OR FABRICATING ANY MATERIAL.

CONTRACT CHANGE ORDER NO.
SHEET 1 OF 1

REPLACEMENT SHEET

DESIGN	R. Engel 4/86	Checked J. Pecchia 1/86	
DETAILS	BF Bidwell 12/85	Checked R. Engel 4/86	
QUANTITIES		Checked	

State of CALIFORNIA DEPARTMENT OF TRANSPORTATION

DIVISION OF STRUCTURES STRUCTURE DESIGN
STRUCTURE DESIGN 1 — J. Pecchia
STRUCTURE DESIGN 2 — C. Sasaki

BRIDGE NO. 33N-375S
POST MILE 2.0-2.1

SFOBB TOLL PLAZA MODIFICATIONS
CONCRETE REMOVAL PLAN 2

SHEET S-3 R2

CU 04-007
WO 04-036804

ORIGINAL SCALE IN INCHES FOR REDUCED PLANS 0 1 2 3

REVISIONS (APPROVAL DATE) (PLAN DATE)

I HEREBY CERTIFY THAT THIS IS A TRUE AND ACCURATE COPY OF THE ABOVE DOCUMENT TAKEN UNDER MY DIRECTION AND CONTROL ON THIS DATE IN SACRAMENTO, CALIFORNIA PURSUANT TO AUTHORIZATION BY THE DIRECTOR OF TRANSPORTATION.
[illegible]

29X

This sheet replaces sheet no. 64 of 181 of plan approved March 26, 1985.

DIST.	COUNTY	ROUTE	POST MILES—TOTAL PROJECT	SHEET NO.	TOTAL SHEETS
04	Ala	80	20	64	5

DESIGN ENGINEER C13175
DATE APPROVED March 29, 1985

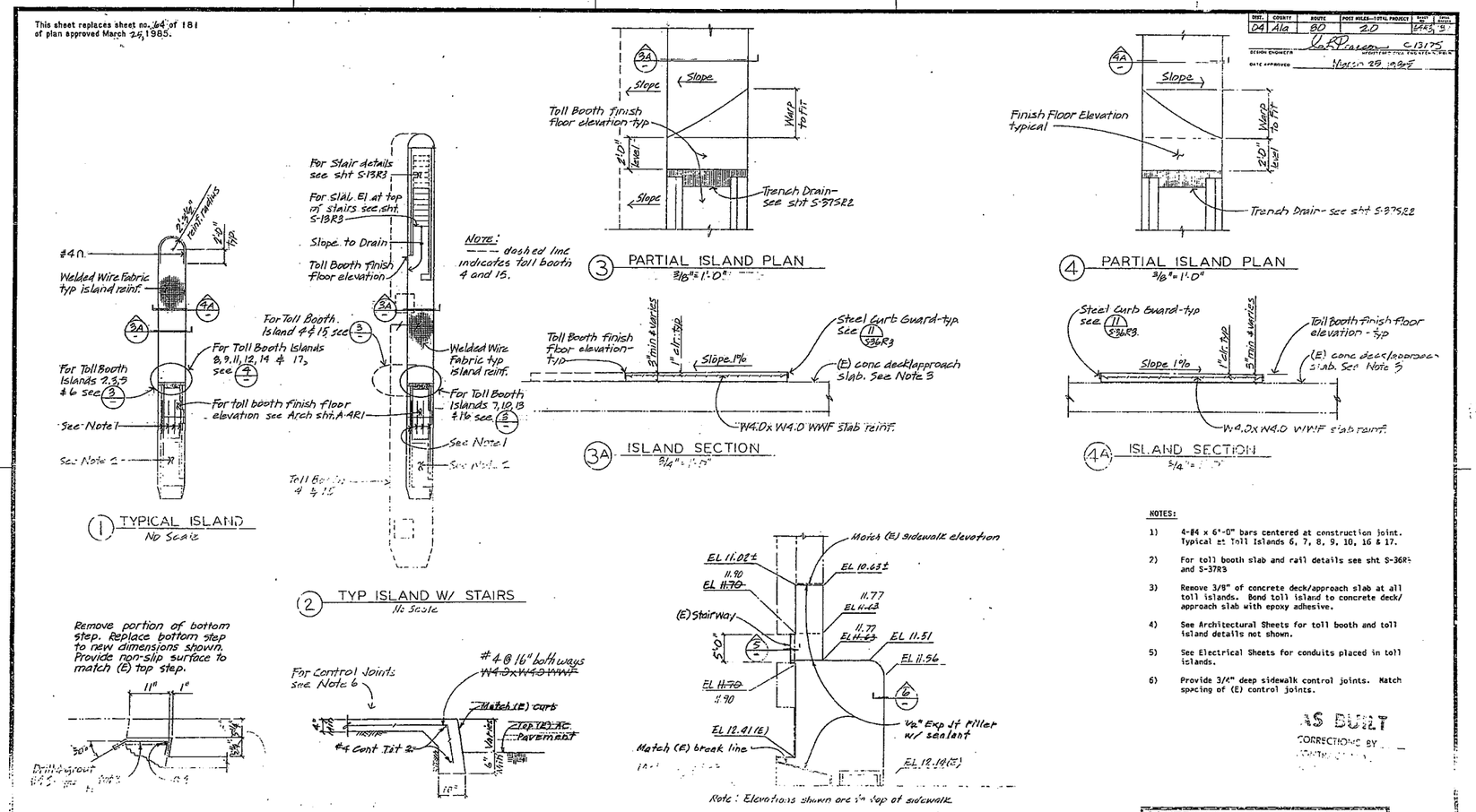

1 TYPICAL ISLAND
No Scale

2 TYP ISLAND W/ STAIRS
No Scale

3 PARTIAL ISLAND PLAN
3/16" = 1'-0"

4 PARTIAL ISLAND PLAN
3/16" = 1'-0"

3A ISLAND SECTION
3/4" = 1'-0"

4A ISLAND SECTION
3/4" = 1'-0"

5 STAIR SECTION
1" = 1'-0"

6 TYP SIDEWALK SECTION
3/4" = 1'-0"

7 SIDEWALK FINISH ELEVATIONS PLAN-CONT'D
1/8" = 1'-0"

NOTES:

1) 4-#4 x 6'-0" bars centered at construction joint. Typical at Toll Islands 6, 7, 8, 9, 10, 16 & 17.

2) For toll booth slab and rail details see sht S-36R3 and S-37R3

3) Remove 3/8" of concrete deck/approach slab at all toll islands. Bond toll island to concrete deck/approach slab with epoxy adhesive.

4) See Architectural Sheets for toll booth and toll island details not shown.

5) See Electrical Sheets for conduits placed in toll islands.

6) Provide 3/4" deep sidewalk control joints. Match spacing of (E) control joints.

AS BUILT
CORRECTIONS BY

CONTRACT CHANGE ORDER NO.
SHEET OF

REPLACEMENT SHEET

AS BUILT PLANS
Contract No. 04-0360804
Date Completed 5-14-91
Document No.

DESIGN	Footing Figure 6-85	Checked RDeCuna 8/86	
DETAILS	SFBidwell 3-86	Checked RDeCuna 8/86	
QUANTITIES		Checked	

State of CALIFORNIA
DEPARTMENT OF TRANSPORTATION

DIVISION OF STRUCTURES
STRUCTURE DESIGN
RDeCuna C37049

BRIDGE NO. 35 1k 57 195
POST MILE

SFOBB TOLL PLAZA MODIFICATIONS
FINISH ELEVATIONS PLAN 2

SHEET S-5 R3

ORIGINAL SCALE IN INCHES FOR REDUCED PLANS 0 1 2 3

CU
WO

I HEREBY CERTIFY THAT THIS IS A TRUE AND ACCURATE COPY OF THE ABOVE DOCUMENT TAKEN UNDER MY DIRECTION AND CONTROL ON THIS DATE IN SACRAMENTO, CALIFORNIA PURSUANT TO AUTHORIZATION BY THE DIRECTOR OF TRANSPORTATION.

29X

This sheet replaces sheet no. 65 of 181 of plan approved March 25, 1985.

DIST.	COUNTY	ROUTE	POST MILES—TOTAL PROJECT	SHEET NO.	TOTAL SHEETS
04	Ala	80	2.0	164	181

DESIGN ENGINEER

DATE APPROVED March 25, 1985

AS BUILT
CORRECTIONS BY Jim Vallas
CONTRACT NO. 04-036804
DATE 8/30/84 RJB 7/91

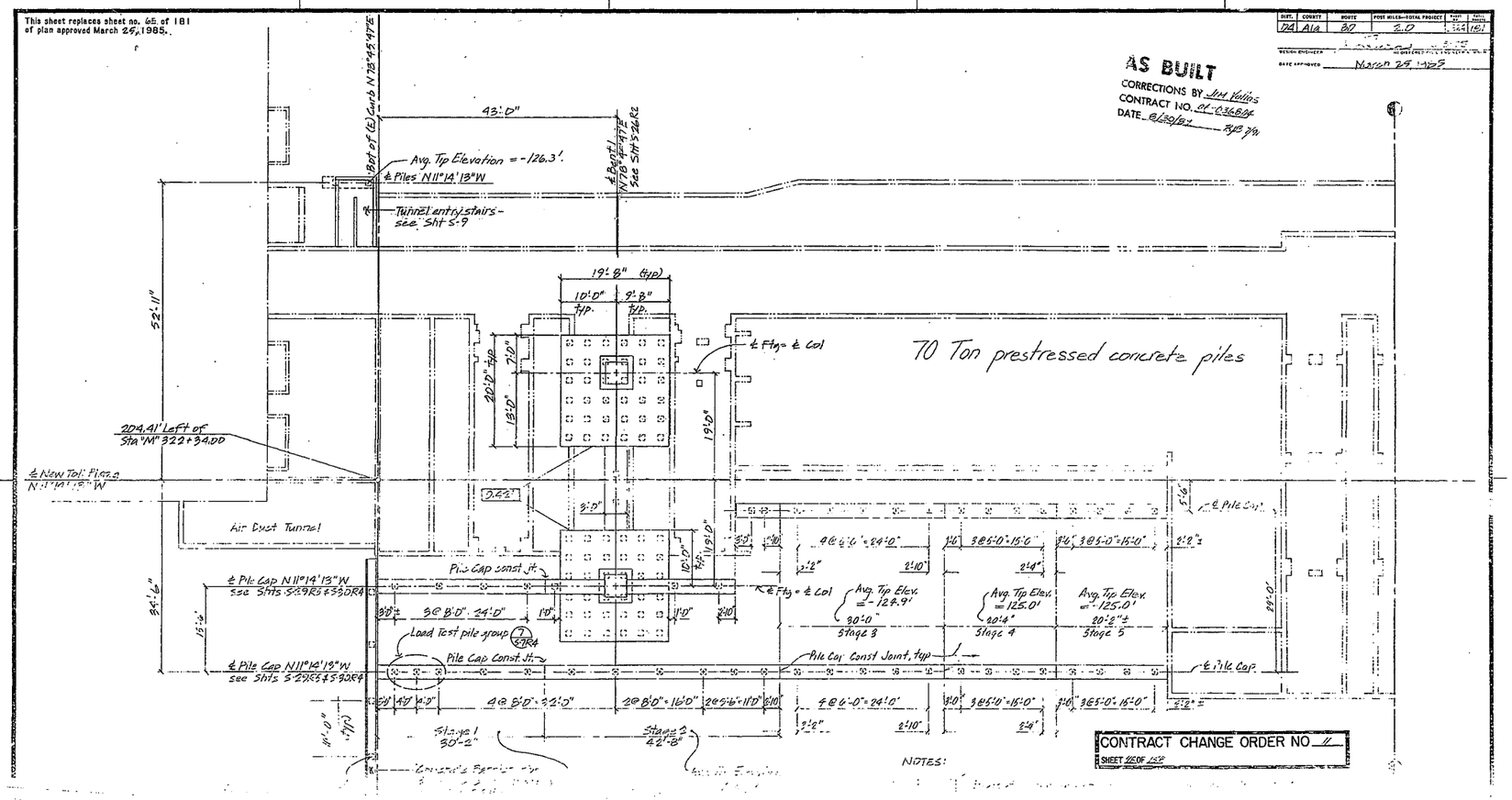

CONTRACT CHANGE ORDER NO. 11
SHEET 26 OF 28

NOTES:

1) FOUNDATION PLAN
1/8" = 1'-0"

Contract No. 04-036804
Date Completed 5-14-91
Document No.

REPLACEMENT SHEET

DESIGN			State of CALIFORNIA DEPARTMENT OF TRANSPORTATION	DIVISION OF STRUCTURES STRUCTURE DESIGN	BRIDGE NO. 33M5785	SFOBB TOLL PLAZA MODIFICATIONS FOUNDATION PLAN I	SHEET S-6 R4
DETAILS	SF Bidwell	1-86			POST MILE		
QUANTITIES							

ORIGINAL SCALE IN INCHES FOR REDUCED PLANS

CU 04207
WO

I HEREBY CERTIFY THAT THIS IS A TRUE AND ACCURATE COPY OF THE ABOVE DOCUMENT TAKEN UNDER MY DIRECTION AND CONTROL ON THIS DATE IN SACRAMENTO, CALIFORNIA PURSUANT TO AUTHORIZATION BY THE DIRECTOR OF TRANSPORTATION

29X

This sheet replaces sheet no. 86 of 181 of plan approved March 25, 1985.

DIST.	COUNTY	ROUTE	POST MILES—TOTAL PROJECT	SHEET NO.	TOTAL SHEETS
04	Ala	80	2.0	86	181

DESIGN ENGINEER — REGISTERED CIVIL ENGINEER

DATE APPROVED March 25, 1986

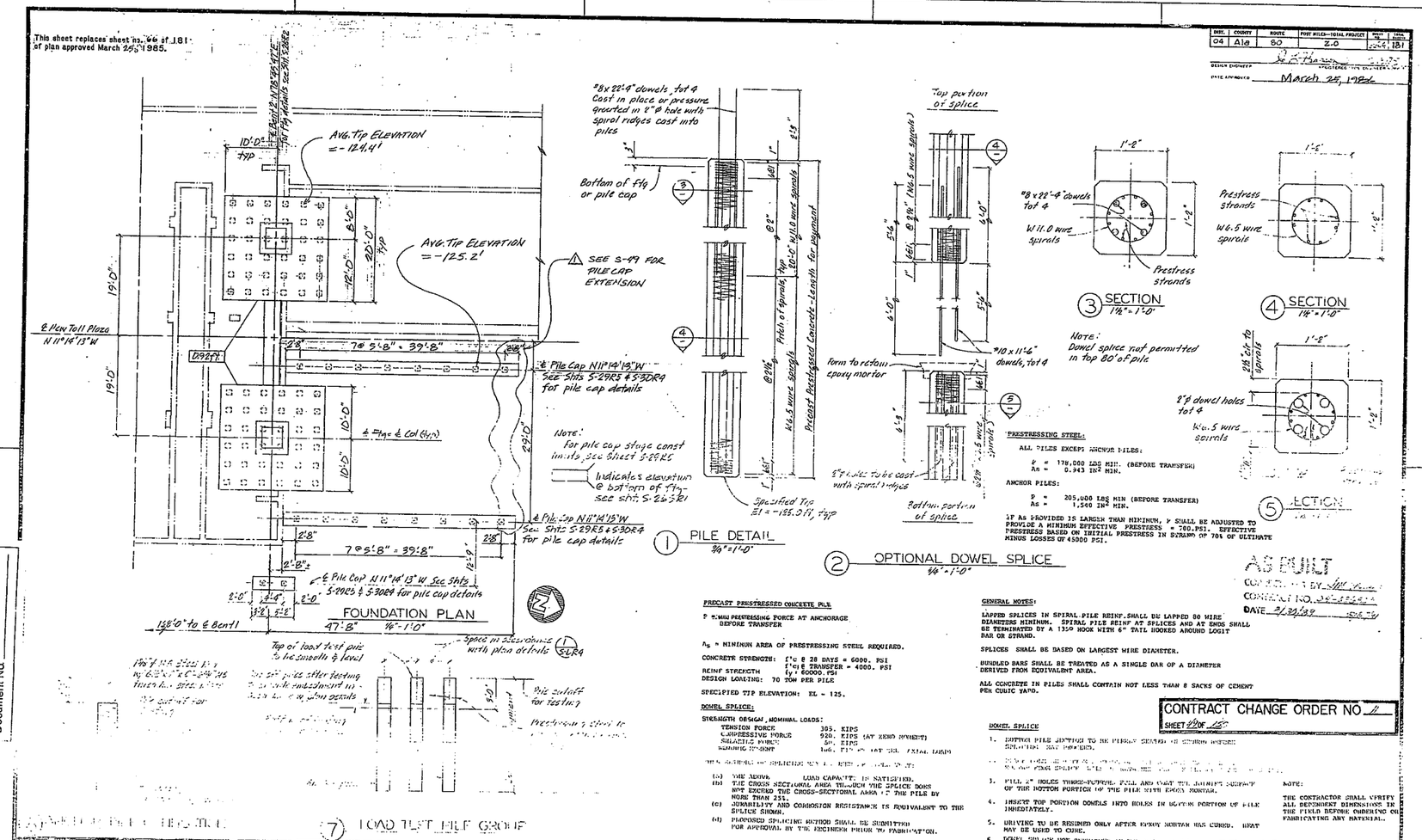

PRESTRESSING STEEL:

ALL PILES EXCEPT ANCHOR PILES:

P = 178,000 LBS MIN. (BEFORE TRANSFER)
As = 0.943 IN² MIN.

ANCHOR PILES:

P = 205,000 LBS MIN (BEFORE TRANSFER)
As = 1.540 IN² MIN.

IF As PROVIDED IS LARGER THAN MINIMUM, P SHALL BE ADJUSTED TO PROVIDE A MINIMUM EFFECTIVE PRESTRESS = 700.PSI. EFFECTIVE PRESTRESS BASED ON INITIAL PRESTRESS IN STRAND OF 70% OF ULTIMATE MINUS LOSSES OF 45000 PSI.

PRECAST PRESTRESSED CONCRETE PILE

P = MIN PRESTRESSING FORCE AT ANCHORAGE BEFORE TRANSFER

A_s = MINIMUM AREA OF PRESTRESSING STEEL REQUIRED.

CONCRETE STRENGTH: f'c @ 28 DAYS = 6000. PSI
f'ci @ TRANSFER = 4000. PSI
REINF STRENGTH fy = 60000. PSI
DESIGN LOADING: 70 TON PER PILE

SPECIFIED TIP ELEVATION: EL - 125.

DOWEL SPLICE:

STRENGTH DESIGN NOMINAL LOADS:

TENSION FORCE	305. KIPS
COMPRESSIVE FORCE	920. KIPS (AT ZERO MOMENT)
SHEARING FORCE	50. KIPS
BENDING MOMENT	[illegible] KIP-FT. (AT SPL. TYPICAL DWGS)

THE SCHEME OF SPLICING MUST [illegible] THE FOLLOWING:

(a) THE ABOVE LOAD CAPACITY IS SATISFIED.
(b) THE CROSS SECTIONAL AREA THROUGH THE SPLICE DOES NOT EXCEED THE CROSS-SECTIONAL AREA OF THE PILE BY MORE THAN 25%.
(c) DURABILITY AND CORROSION RESISTANCE IS EQUIVALENT TO THE SPLICE SHOWN.
(d) PROPOSED SPLICING METHOD SHALL BE SUBMITTED FOR APPROVAL BY THE ENGINEER PRIOR TO FABRICATION.

GENERAL NOTES:

LAPPED SPLICES IN SPIRAL PILE REINF. SHALL BE LAPPED 80 WIRE DIAMETERS MINIMUM. SPIRAL PILE REINF AT SPLICES AND AT ENDS SHALL BE TERMINATED BY A 135° HOOK WITH 6" TAIL HOOKED AROUND LOGIT BAR OR STRAND.

SPLICES SHALL BE BASED ON LARGEST WIRE DIAMETER.

BUNDLED BARS SHALL BE TREATED AS A SINGLE BAR OF A DIAMETER DERIVED FROM EQUIVALENT AREA.

ALL CONCRETE IN PILES SHALL CONTAIN NOT LESS THAN 8 SACKS OF CEMENT PER CUBIC YARD.

DOWEL SPLICE

1. BOTTOM PILE SECTION TO BE PLUMB CENTER OF SPIRAL WITHIN SPLICING MAY PROCEED.
2. [illegible]
3. FILL 2" HOLES THREE-FOURTHS FULL AND COAT THE JOINTS SURFACE OF THE BOTTOM PORTION OF THE PILE WITH EPOXY MORTAR.
4. INSERT TOP PORTION DOWELS INTO HOLES IN BOTTOM PORTION OF PILE IMMEDIATELY.
5. DRIVING TO BE RESUMED ONLY AFTER EPOXY MORTAR HAS CURED. HEAT MAY BE USED TO CURE.
6. DOWEL SPLICE NOT PERMITTED IN TOP 80' OF PILE.

NOTE: THE CONTRACTOR SHALL VERIFY ALL DOWEL DIMENSIONS IN THE FIELD BEFORE SUBMITTING OR FABRICATING ANY MATERIAL.

AS BUILT
CONTRACTOR [illegible]
CONTRACT NO. [illegible]
DATE 2/28/89

CONTRACT CHANGE ORDER NO. 2
SHEET 49 OF 125

AS BUILT PLANS
Contract No. 04-036804
Date Completed 5-14-91
Document No.

DESIGN	A.G. [illegible] 3/86	Checked [illegible] 3/86	
DETAILS	[illegible] 3/86	Checked A.G. [illegible] 3/86	
QUANTITIES		Checked	

State of CALIFORNIA DEPARTMENT OF TRANSPORTATION

STRUCTURES - DESIGN — [illegible] C2049

BRIDGE NO. 33N-57B5 — POST MILE 9.0-2.1

SFOBB TOLL PLAZA MODIFICATIONS

FOUNDATION PLAN 2

SHEET S-7 R4

REPLACEMENT SHEET

ORIGINAL SCALE IN INCHES FOR REDUCED PLANS 0 1 2 3

CU 04201
WO 04-6621

I HEREBY CERTIFY THAT THIS IS A TRUE AND ACCURATE COPY OF THE ABOVE DOCUMENT TAKEN UNDER MY DIRECTION AND CONTROL ON THIS DATE IN SACRAMENTO, CALIFORNIA, PURSUANT TO AUTHORIZATION BY THE DIRECTOR OF TRANSPORTATION.

DATE 11/1/91 [illegible]

29X

DIST.	COUNTY	ROUTE	POST MILES—TOTAL PROJECT	PREV. TOTAL	PROJ. TOTAL
04	Ala	80	2.0	2.0	1.81

DESIGN ENGINEER: G. D. Jackson 1375 — REGISTERED CIVIL ENGINEER COUNTY
DATE APPROVED: March 28, 1995

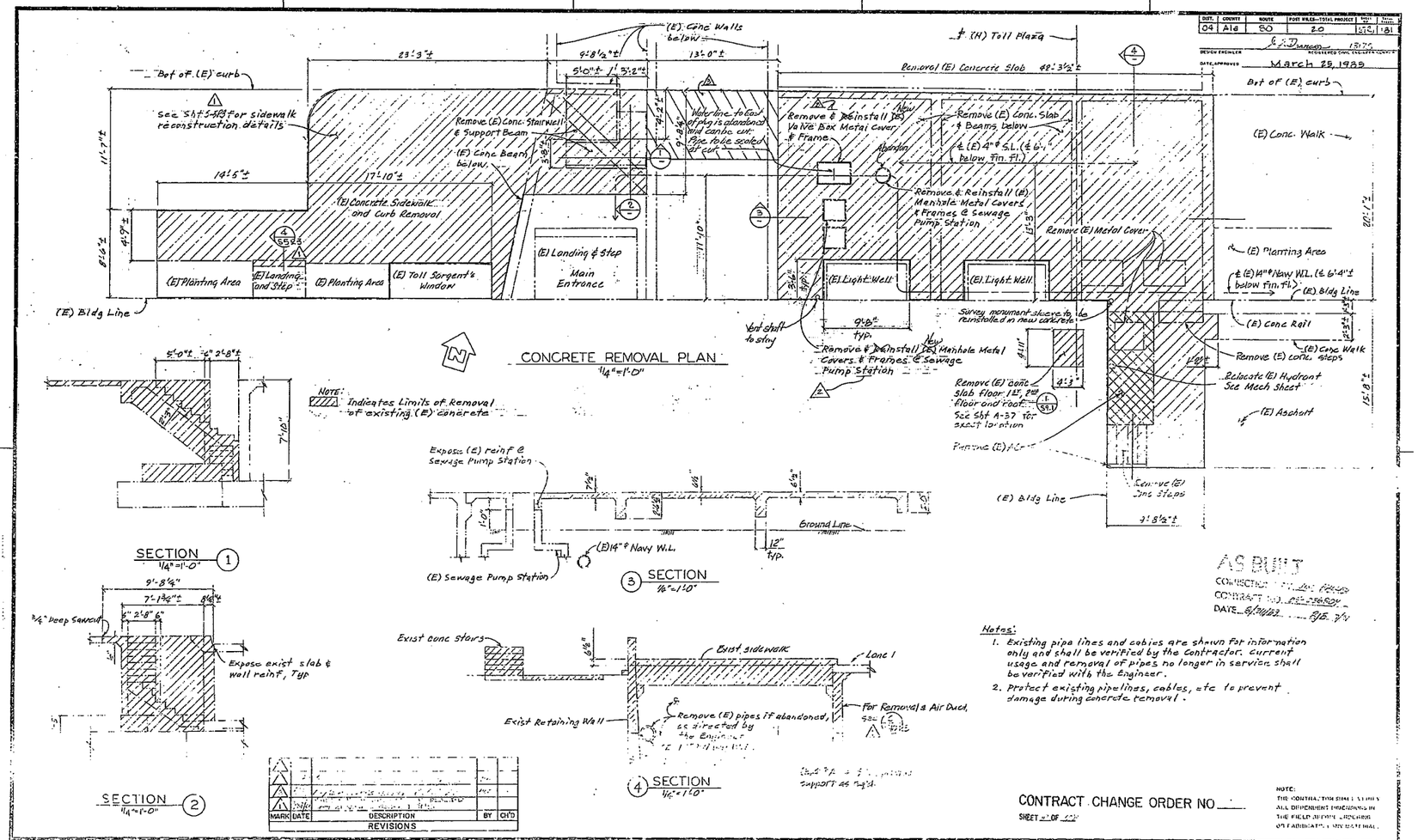

AS BUILT PLANS
Contract No. 04-03604
Date Completed 5-14-91
Document No.

AS BUILT
CONSTRUCTION ... 1995
CONTRACT NO. 04-03604
DATE 8/14/92 ... 8/5, 9/4

Notes:
1. Existing pipe lines and cables are shown for information only and shall be verified by the Contractor. Current usage and removal of pipes no longer in service shall be verified with the Engineer.
2. Protect existing pipelines, cables, etc to prevent damage during concrete removal.

MARK	DATE	DESCRIPTION	BY	CH'D
		REVISIONS		

CONTRACT CHANGE ORDER NO. ____
SHEET ___ OF ___

NOTE: THE CONTRACTOR SHALL VERIFY ALL DEPENDENT DIMENSIONS IN THE FIELD BEFORE ORDERING OR FABRICATING ANY MATERIAL.

DESIGN	In.	Checked
DETAILS	Sakamoto 1/93	Checked
QUANTITIES	In.	Checked

State of CALIFORNIA DEPARTMENT OF TRANSPORTATION

STRUCTURES - DESIGN
Chief C 32049

BRIDGE NO. 32N15T85
POST MILE 2.0/2.1

CU 33301
WO 0280C1

SFOBB TOLL PLAZA MODIFICATIONS
CONCRETE REMOVAL AT SIDEWALK AND TUNNEL ENTRY

SHEET S-8 R1

ORIGINAL SCALE IN INCHES FOR REDUCED PLANS

Dimensions prefix letter indicate revision dates

I HEREBY CERTIFY THAT THIS IS A TRUE AND ACCURATE COPY OF THE ABOVE DOCUMENT TAKEN UNDER MY DIRECTION AND CONTROL ON THIS DATE IN SACRAMENTO, CALIFORNIA PURSUANT TO AUTHORIZATION BY THE DIRECTOR OF TRANSPORTATION

29X

DIST.	COUNTY	ROUTE	POST MILE - PREFIX
04	Ala.	80	2.0-2.1

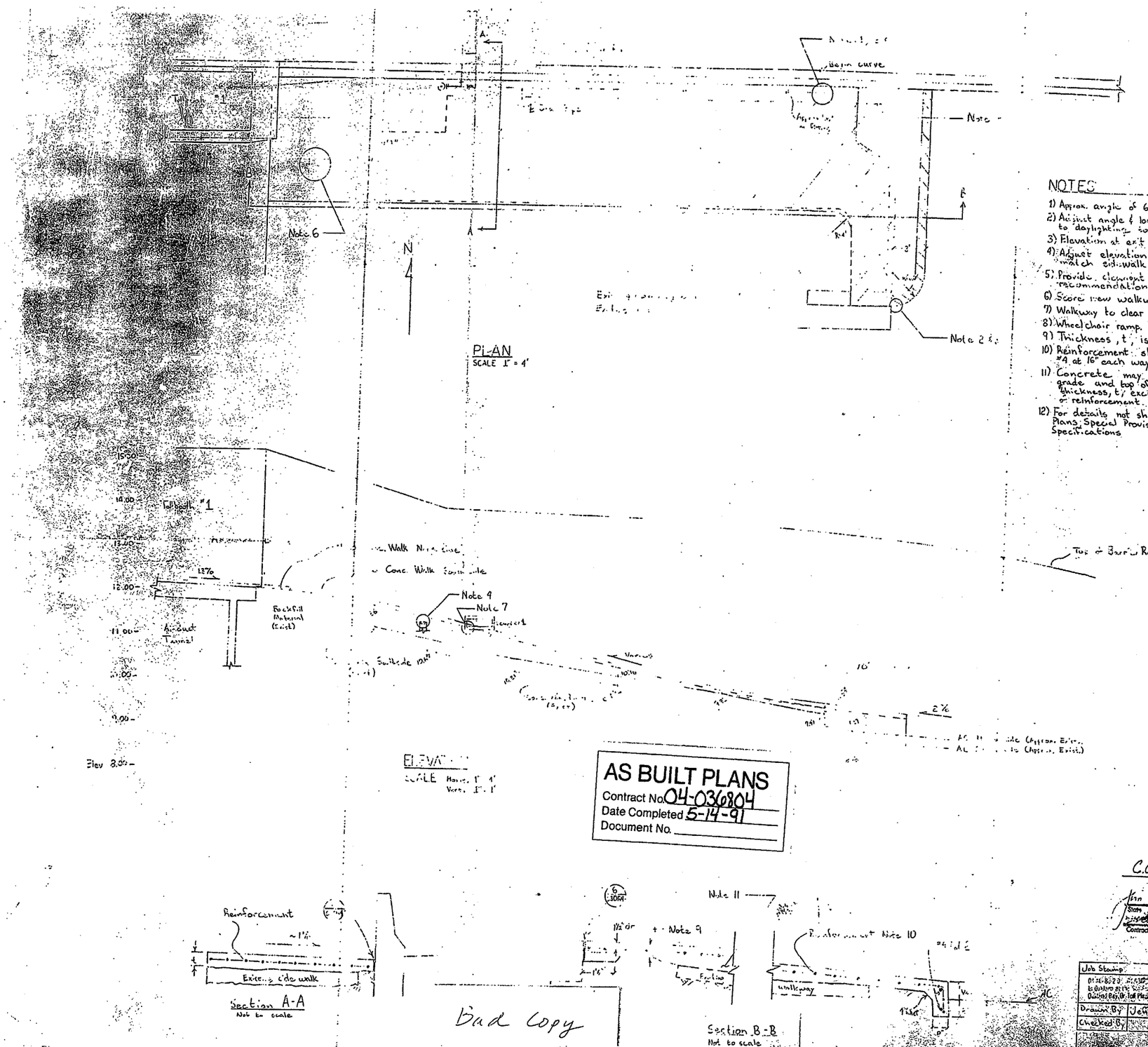

PLAN
SCALE 1" = 4'

ELEVATION
SCALE Horiz. 1" = 4'
Vert. 1" = 1'

NOTES

1) Approx. angle of 67°
2) Adjust angle & location of [illegible] to daylighting to clear existing lower walk
3) Elevation at exit shall match exist. AC
4) Adjust elevation of cleanout to match sidewalk
5) Provide cleanout based on code or recommendation
6) Score new walkway at approx. 3' intervals
7) Walkway to clear scuppers
8) Wheelchair ramp. Refer Standard Details N8-B
9) Thickness, t, is 3½" minimum
10) Reinforcement shall be 4x4-W4.0 x W4.0 or #4 at 16" each way - See Note 1
11) Concrete may be use between finish grade and top of existing walkway. If thickness, t, exceeds 5½" two layers of reinforcement is required
12) For details not shown refer to the Contract Plans, Special Provisions & Standard Plans and Specifications

AS BUILT PLANS
Contract No. 04-036804
Date Completed 5-14-91
Document No.

CONTRACT No. 04-036804
DATE ACCEPTED AUG 17 1990
AS BUILT
RESIDENT ENGINEER Jim Vallar
REVISIONS BY D. FRANCO DATE 7-31-90

C.C.O. # 29

Sheet 2 of 2

Jim Vallar 5/87
State Date
Contractor Date

Job Stamp	Detail
[illegible]	Sidewalk details for SFOBB Toll Plaza CCO # 29
Drawn By Jeff Abercrombie	Date 3-5-87
Checked By	Date

SHEET 5-8 S1

APR 20 1987

I HEREBY CERTIFY THAT THIS IS A TRUE AND ACCURATE COPY OF THE ABOVE DOCUMENT TAKEN UNDER MY DIRECTION AND CONTROL ON THIS DATE IN SACRAMENTO, CALIFORNIA PURSUANT TO AUTHORIZATION BY THE DIRECTOR OF TRANSPORTATION.

DATE 11/05/91 SIGNATURE Deborah Robinson

29X

DIST.	COUNTY	ROUTE	POST MILES—TOTAL PROJECT	TOTAL SHEETS	SHEET NO.
04	Ala	80	20	68	181

DESIGN ENGINEER: Sr. Bridge Engr. 3135
DATE APPROVED: March 28, 1985

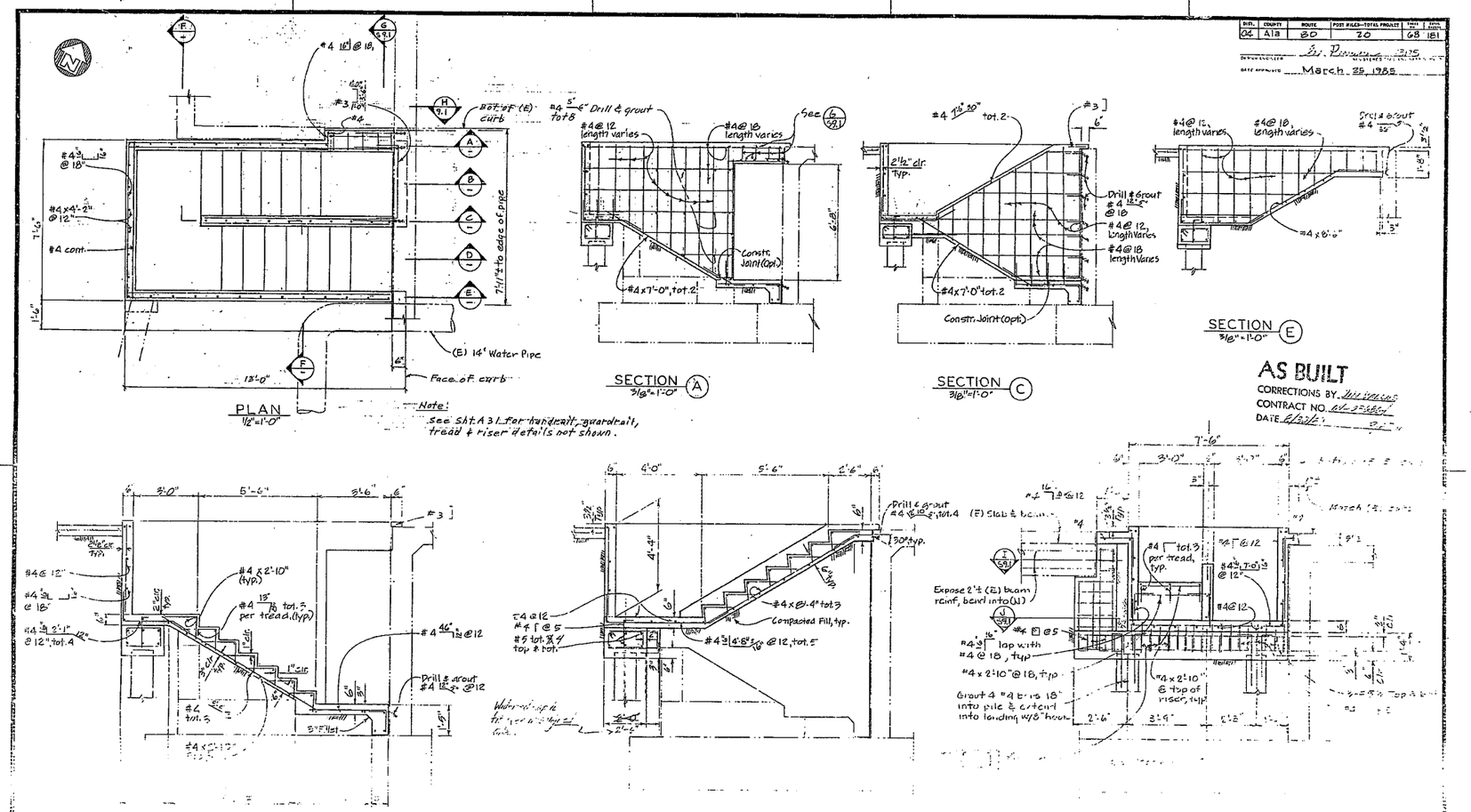

NOTE:
THE CONTRACTOR SHALL VERIFY ALL DEPENDENT DIMENSIONS IN THE FIELD BEFORE ORDERING OR FABRICATING ANY MATERIAL.

AS BUILT
CORRECTIONS BY: [illegible]
CONTRACT NO. [illegible]
DATE 8/23/91

CONTRACT CHANGE ORDER NO. ___
SHEET ___ OF ___

AS BUILT PLANS
Contract No. 04-036804
Date Completed 5-14-91
Document No.

DESIGN		
DETAILS	G.F. Bidwell 9-2-91	
QUANTITIES		

State of CALIFORNIA
DEPARTMENT OF TRANSPORTATION

STRUCTURES - DESIGN
Theodore C. Zimmer
PROJECT ENGINEER — REGISTERED CIVIL ENGINEER

BRIDGE NO. 33 M 0777
POST MILE 2.2-R1

SFOBB TOLL PLAZA MODIFICATIONS
TUNNEL ENTRY STAIRS DETAILS

SHEET S 9

ORIGINAL SCALE IN INCHES FOR REDUCED PLANS 0 1 2 3

CU 042097
WO 036-2-01

REVISIONS TO BE WITHIN VISUAL ZONE

I HEREBY CERTIFY THAT THIS IS A TRUE AND ACCURATE COPY OF THE ABOVE DOCUMENT TAKEN UNDER MY DIRECTION AND CONTROL ON THIS DATE IN SACRAMENTO, CALIFORNIA PURSUANT TO AUTHORIZATION BY THE DIRECTOR OF TRANSPORTATION.
TITLE [illegible]
DATE 5/14/91

29X

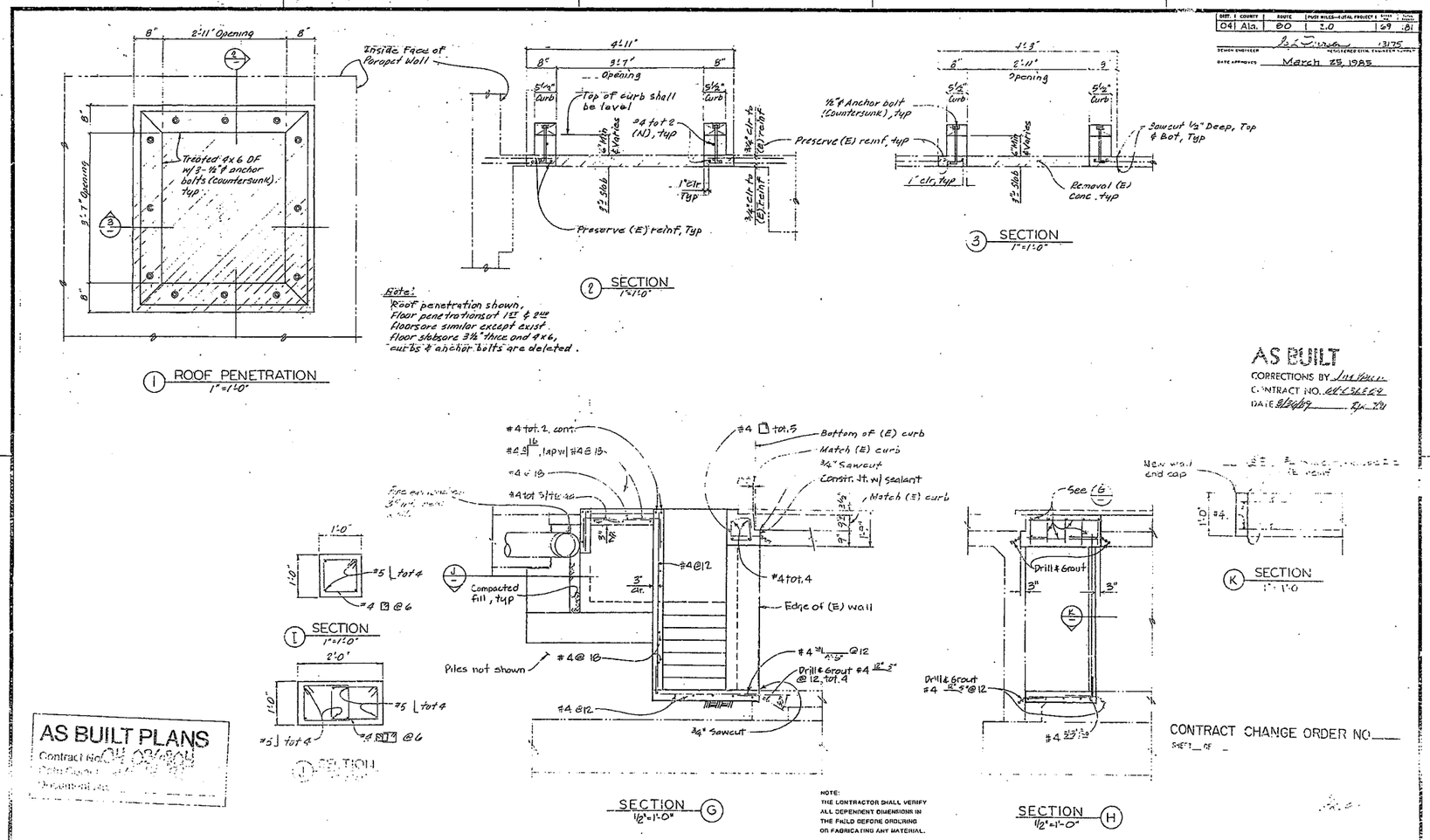

1 ROOF PENETRATION
1"=1'-0"

2 SECTION
1"=1'-0"

3 SECTION
1"=1'-0"

Note:
Roof penetration shown.
Floor penetrations at 1st & 2nd floors are similar except exist floor slabs are 3½" thick and 4x6, curbs & anchor bolts are deleted.

SECTION G
½"=1'-0"

SECTION H
½"=1'-0"

K SECTION
1"=1'-0"

I SECTION
1"=1'-0"

J SECTION

AS BUILT
CORRECTIONS BY
CONTRACT NO.
DATE

AS BUILT PLANS
Contract No. 04-036804

CONTRACT CHANGE ORDER NO.
SHEET OF

NOTE:
THE CONTRACTOR SHALL VERIFY ALL DEPENDENT DIMENSIONS IN THE FIELD BEFORE ORDERING OR FABRICATING ANY MATERIAL.

DIST.	COUNTY	ROUTE	POST MILES—TOTAL PROJECT		
04	Ala.	80	2.0	69	.81

SEMAN ENGINEER — REGISTERED CIVIL ENGINEER
DATE APPROVED March 25, 1985

DESIGN	Carson H. Cork 9/82		8/83	State of CALIFORNIA DEPARTMENT OF TRANSPORTATION	STRUCTURES - DESIGN
DETAILS	G.F. Bidwell 9-82		8/83		BRIDGE NO. 33M5785
QUANTITIES					POST MILE 2.0-2.1

BECCHIA C 32049

SFOBB TOLL PLAZA MODIFICATIONS
TUNNEL ENTRY STAIR DETAILS 2

SHEET S9.1

ORIGINAL SCALE IN INCHES FOR REDUCED PLANS

CU 04207
WO 036801

Proposed prints bearing earlier revision dates

I HEREBY CERTIFY THAT THIS IS A TRUE AND ACCURATE COPY OF THE ABOVE DOCUMENT TAKEN UNDER MY DIRECTION AND CONTROL ON THIS DATE IN SACRAMENTO, CALIFORNIA PURSUANT TO AUTHORIZATION BY THE DIRECTOR OF TRANSPORTATION

29X

AS BUILT PLANS
Contract No. 04-036804
Date Completed 5-14-91
Document No.

DIST.	COUNTY	ROUTE	POST MILES—TOTAL PROJECT	SHEET NO.	TOTAL SHEETS
04	Ala	80	2.0	123	181

DESIGN ENGINEER — REGISTERED CIVIL ENGINEER

DATE APPROVED March 25, 1985

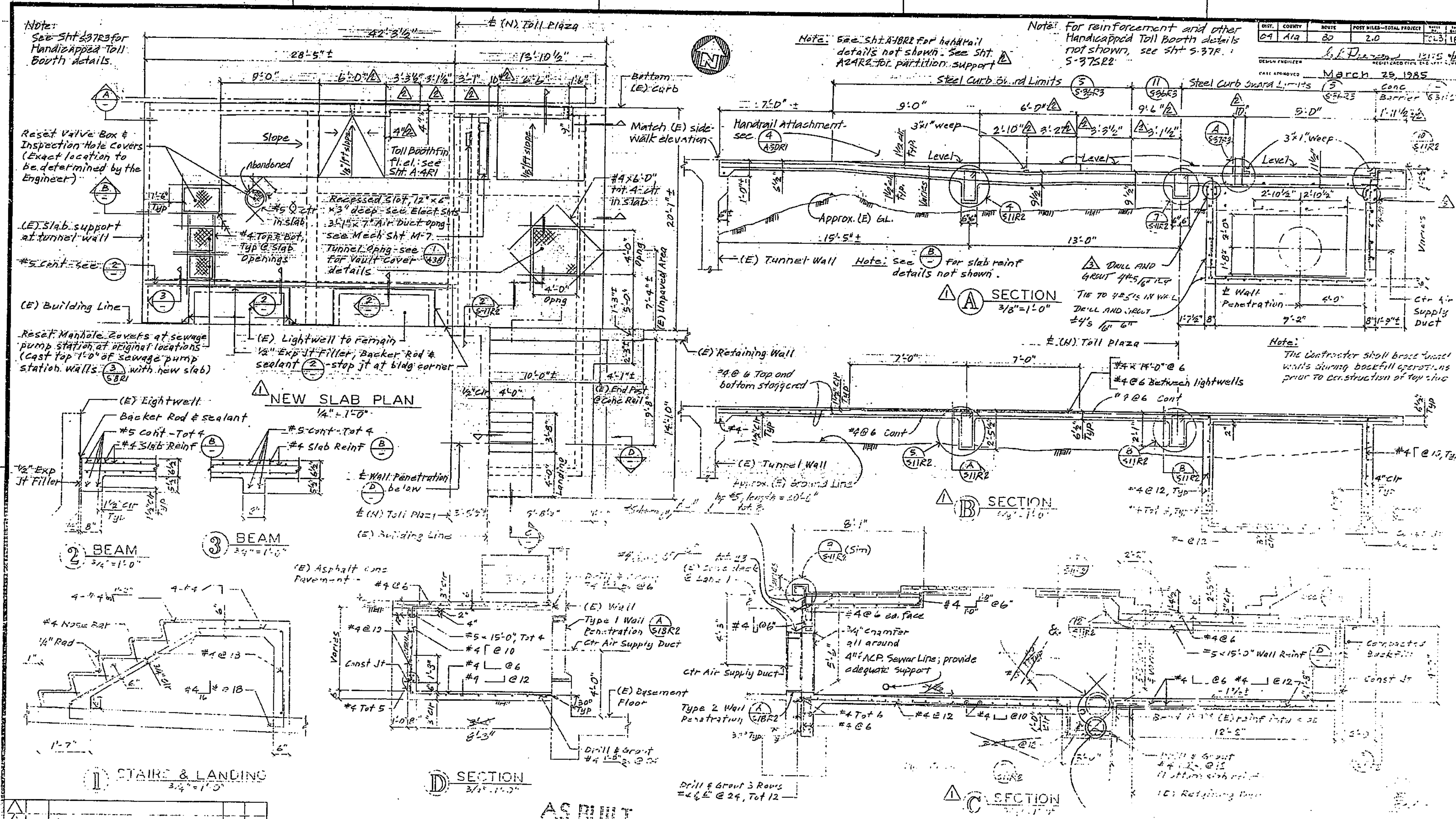

AS BUILT
CORRECTIONS BY
CONTRACT NO.
DATE

NOTE:
All metalwork embedded in concrete, except for stainless steel, shall be hot-dip galvanized after fabrication.

CONTRACT CHANGE ORDER NO. ___
SHEET ___ OF ___

MARK	DATE	DESCRIPTION	BY	CH'D
		REVISIONS		

DESIGN | DETAILS | QUANTITIES

State of CALIFORNIA
DEPARTMENT OF TRANSPORTATION

STRUCTURES - DESIGN

BRIDGE NO. | POST MILE

SFOBB TOLL PLAZA MODIFICATIONS

SHEET S-10 R3

ORIGINAL SCALE IN INCHES FOR REDUCED PLANS 0 1 2 3

CU
WO

29X

DIST.	COUNTY	ROUTE	POST MILES TOTAL PROJECT	SHEET NO.	TOTAL SHEETS
04	ALa	80	2.0	70 A	121

REGISTERED ENGINEER - CIVIL

PLANS APPROVAL DATE

REGISTERED PROFESSIONAL ENGINEER R.R. Bridwell No. C 17362 Exp. 6/30/89 CIVIL STATE OF CALIFORNIA

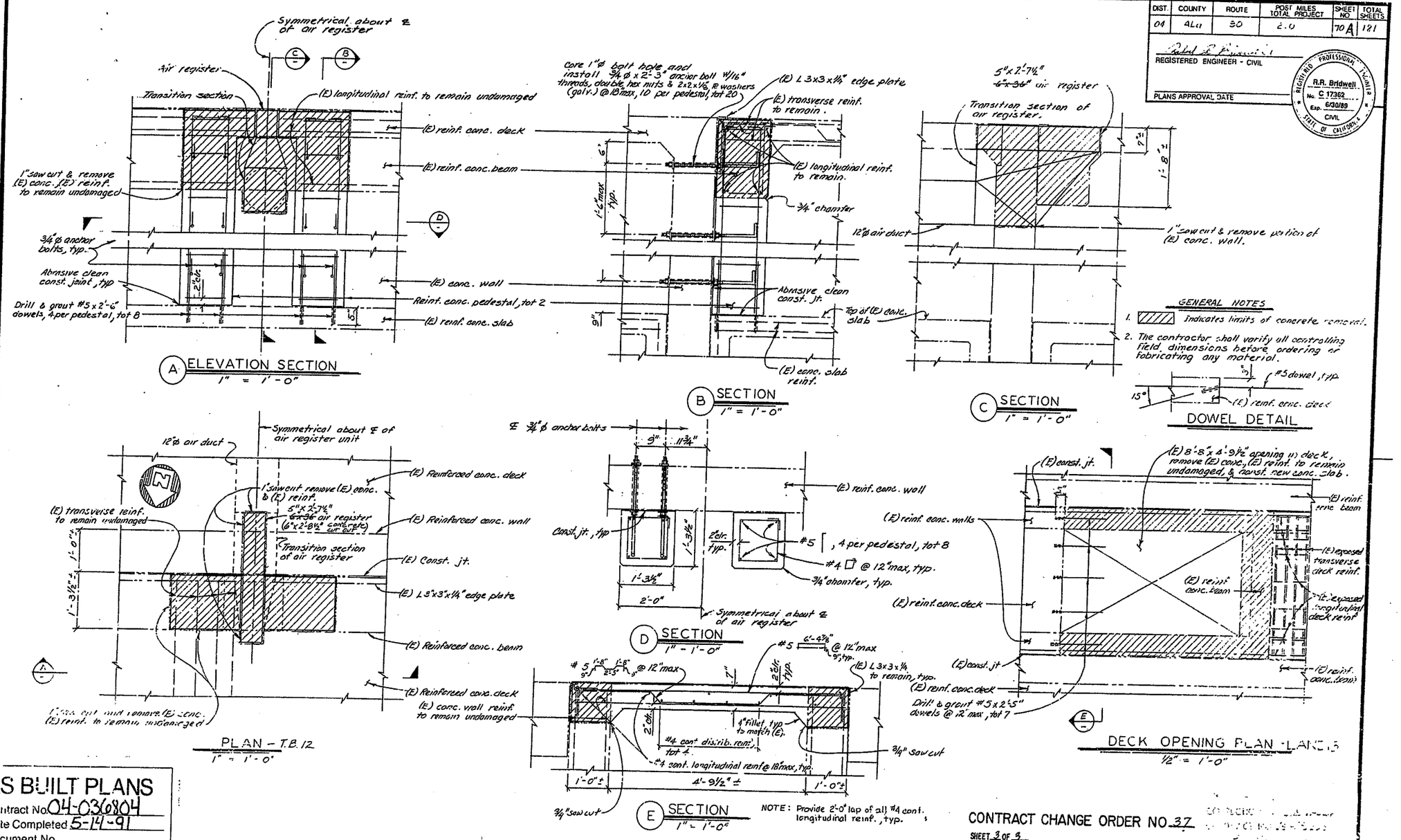

A ELEVATION SECTION
1" = 1'-0"

B SECTION
1" = 1'-0"

C SECTION
1" = 1'-0"

GENERAL NOTES

1. Indicates limits of concrete removal.
2. The contractor shall verify all controlling field dimensions before ordering or fabricating any material.

DOWEL DETAIL

PLAN - T.B. 12
1" = 1'-0"

D SECTION
1" = 1'-0"

E SECTION
1" = 1'-0"

NOTE: Provide 2'-0" lap of all #4 cont. longitudinal reinf., typ.

DECK OPENING PLAN - LANE 3
1/2" = 1'-0"

AS BUILT PLANS
Contract No. 04-036804
Date Completed 5-14-91
Document No.

CONTRACT CHANGE ORDER NO. 37
SHEET 3 OF 3

DESIGN	By Joel E. Escobar 6/88	Checked H.R. Bridwell 6/88
DETAILS	By Joel E. Escobar 6/88	Checked H.R. Bridwell 6/88
QUANTITIES	By	Checked

State of CALIFORNIA
DEPARTMENT OF TRANSPORTATION

DIVISION OF STRUCTURES
STRUCTURE DESIGN
Joel E. Escobar 34606
PROJECT ENGINEER REGISTERED CIVIL ENGINEER NO.

BRIDGE NO. 33M5785
POST MILE 2.0 - 2.1

SFOBB TOLL PLAZA MODIFICATIONS
REINFORCED CONCRETE DECK MODIFICATIONS

SHEET S10 S1A

ORIGINAL SCALE IN INCHES FOR REDUCED PLANS 0 1 2 3

CU 04207
EA 036804

Disregard prints bearing earlier revision dates

REVISION DATES (PRELIMINARY STAGE ONLY) 6/1/88

SHEET OF

29X

I HEREBY CERTIFY THAT THIS IS A TRUE AND ACCURATE COPY OF THE ABOVE DOCUMENT TAKEN UNDER MY DIRECTION AND CONTROL ON THIS DATE IN SACRAMENTO, CALIFORNIA PURSUANT TO AUTHORIZATION BY THE DIRECTOR OF TRANSPORTATION.

DATE 11/05/91 SIGNATURE Deborah Robinson TITLE SUPERVISOR OF MICROFILM SERVICES

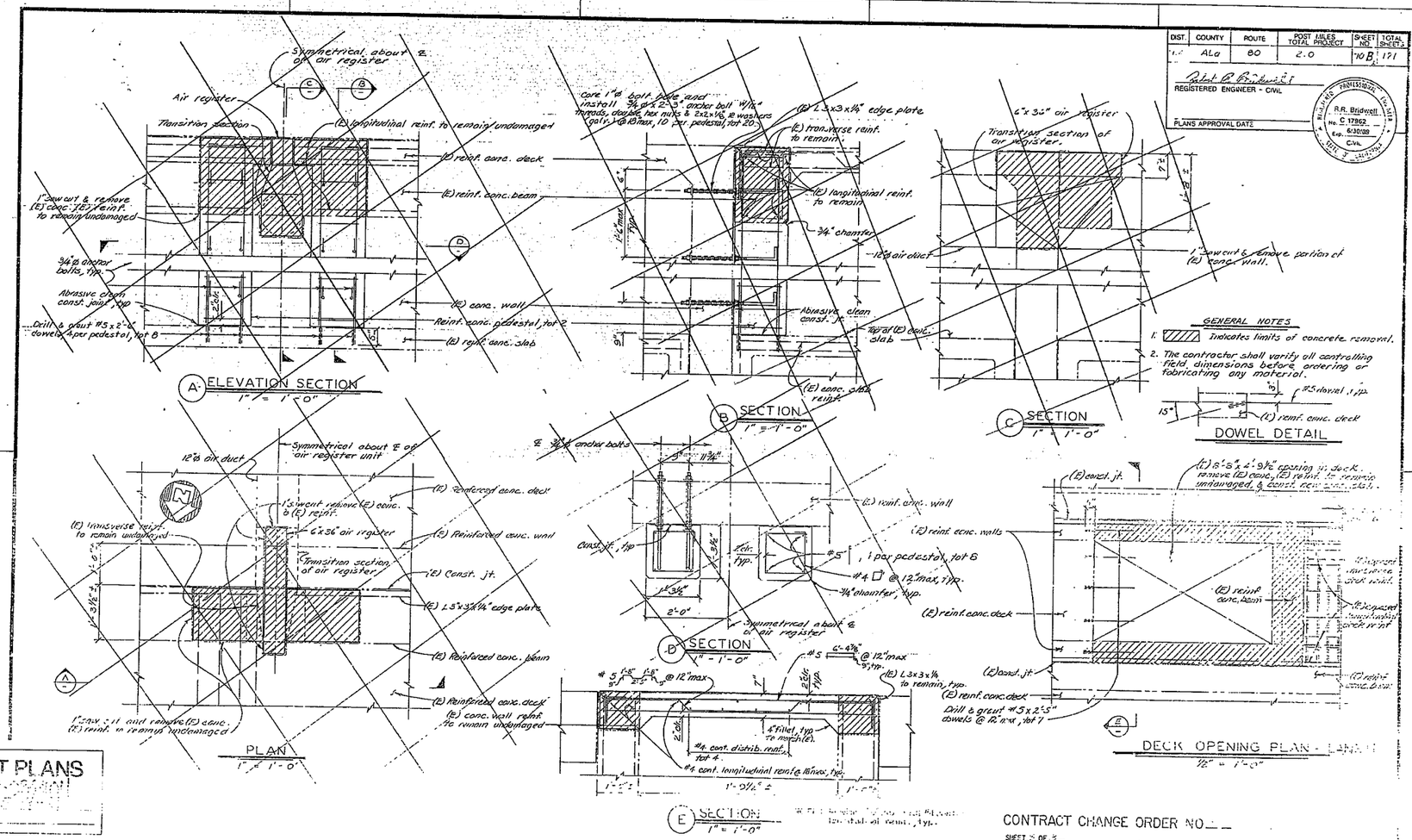

DIST.	COUNTY	ROUTE	POST MILES TOTAL PROJECT	SHEET NO.	TOTAL SHEETS
1-2	ALa	80	2.0	10B	171

REGISTERED ENGINEER - CIVIL

PLANS APPROVAL DATE

R.R. Bridwell No. C 17862 Exp. 6/30/09 CIVIL

AS BUILT PLANS
Contract No.
Date Completed
Document No.

CONTRACT CHANGE ORDER NO.

SHEET 2 OF 2

DESIGN		State of CALIFORNIA DEPARTMENT OF TRANSPORTATION	DIVISION OF STRUCTURES STRUCTURE DESIGN
DETAILS			BRIDGE NO. 33M5785 POST MILE 2.0-2.1
QUANTITIES			

SFOBB TOLL PLAZA MODIFICATIONS

REINFORCED CONCRETE DECK MODIFICATIONS

ORIGINAL SCALE IN INCHES FOR REDUCED PLANS

CU 04207
EA 036804

29X

MARK	DATE	DESCRIPTION	BY	CH'D
A	5-21-82	Note added	GMB	DP
3	5-21-82	Wall reinf. detail entled. corr.	GFB	DP
2	2-5-82	Slab section changed	GFB	DP
1	12-2-81	Curb dimensions changed	GFB	DD

REVISIONS

DIST.	COUNTY	ROUTE	POST MILES—TOTAL PROJECT	SHEET TOTAL	SHEET NO.
04	Ala	80	2.0	71R2	181

DESIGN ENGINEER: Jack Dawson / 1235 RESIDENT CIVIL ENGINEER, A.I.A.E.E.

DATE APPROVED: March 25, 1983

AS BUILT
CORRECTIONS BY Jim Vollins
CONTRACT NO. 04-036804
DATE 8/30/89

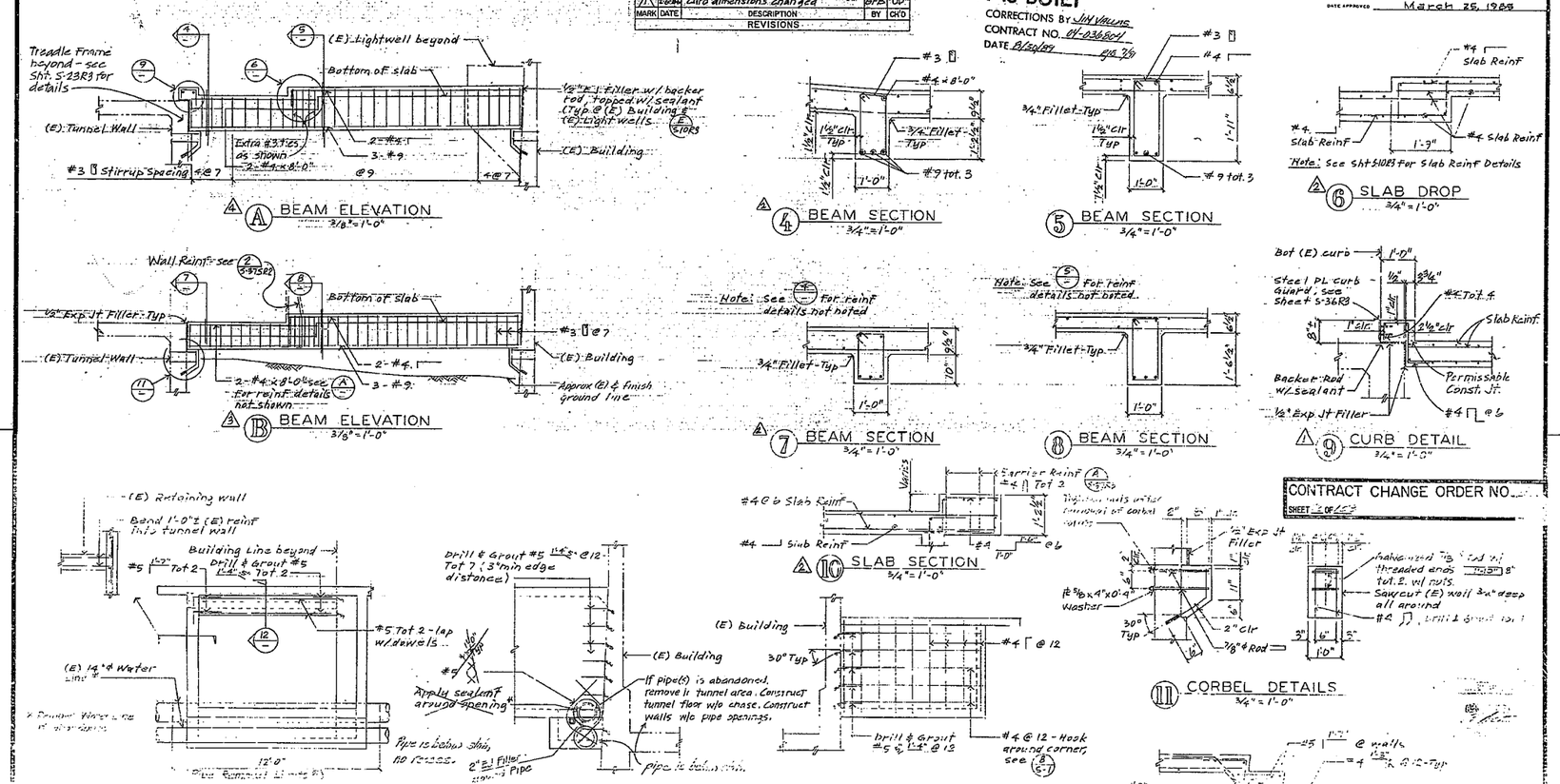

CONTRACT CHANGE ORDER NO.
SHEET OF

Contract No. 04-036804
Date Completed 5-14-91
Document No.

DESIGN			
DETAILS			
QUANTITIES			

State of CALIFORNIA DEPARTMENT OF TRANSPORTATION

STRUCTURES - DESIGN

BRIDGE NO. 33-0069
POST MILE

SFOBB TOLL PLAZA MODIFICATIONS

SHEET S-11 R2

ORIGINAL SCALE IN INCHES FOR REDUCED PLANS 0 1 2 3

CU 04207
WO 024801

THE CONTRACTOR SHALL VERIFY ALL DIMENSIONS, DIMENSIONS AND THE FIELD ENGINEER BEFORE ORDERING OR FABRICATING ANY MATERIAL.

I HEREBY CERTIFY that THIS IS A TRUE AND ACCURATE COPY OF THE ABOVE DOCUMENT TAKEN UNDER MY DIRECTION AND CONTROL ON THIS DATE IN SACRAMENTO, CALIFORNIA PURSUANT TO AUTHORITY ON FILE IN THE DEPARTMENT OF TRANSPORTATION.

29%

DIST.	COUNTY	ROUTE	POST MILES—TOTAL PROJECT	TOTAL SHEETS	SHEET NO.
04	Ala	80	2.0	72	181

DESIGN ENGINEER: 12175 — REGISTERED CIVIL ENGINEER (ELECTRICAL)

DATE APPROVED: March 25, 1985

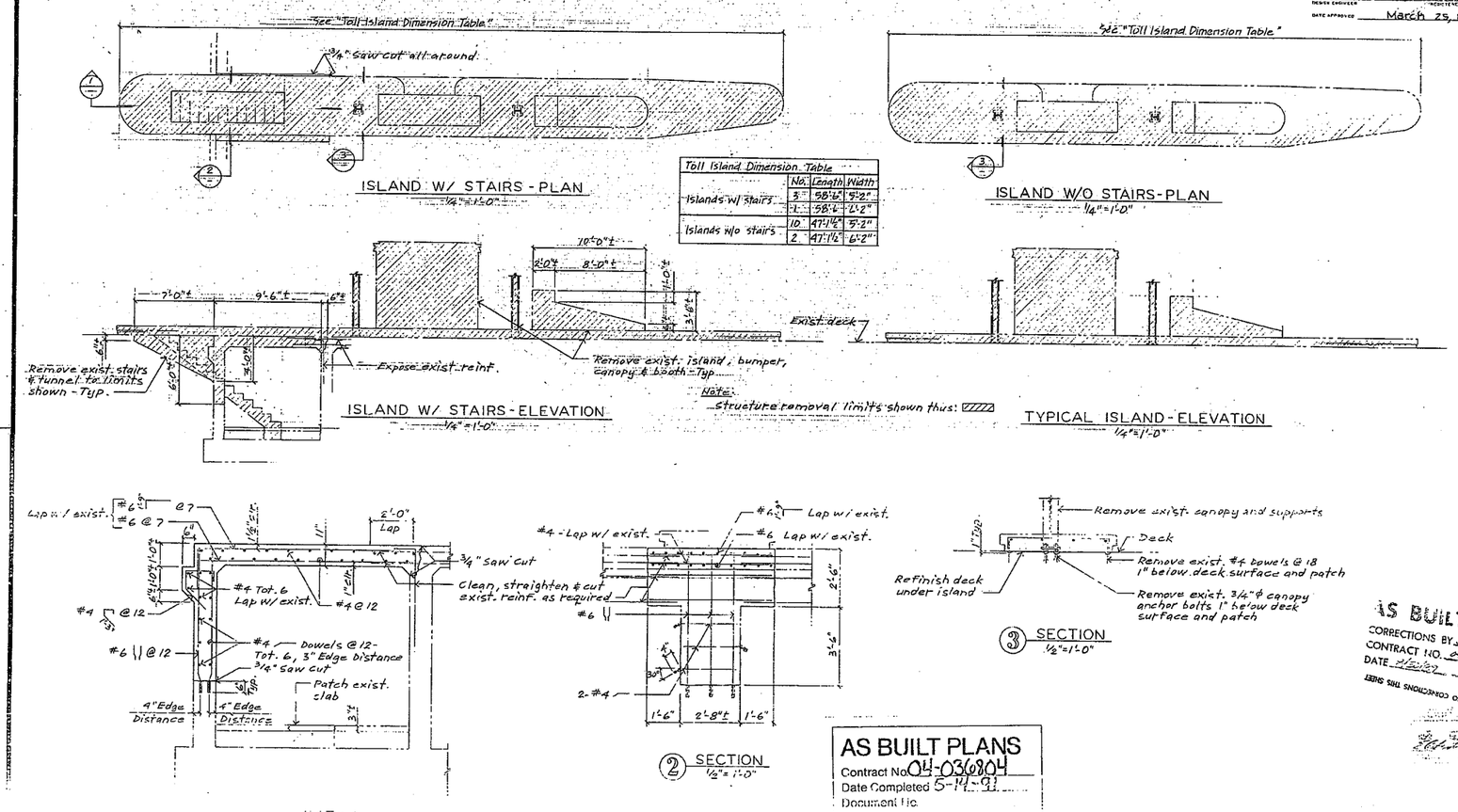

Toll Island Dimension Table	No.	Length	Width
Islands w/ stairs	3	58'-6"	5'-2"
	1	58'-6"	6'-2"
Islands w/o stairs	10	47'-1½"	5'-2"
	2	47'-1½"	6'-2"

Note: Structure removal limits shown thus: ▨

AS BUILT PLANS
Contract No. 04-036804
Date Completed 5-14-91
Document No.

AS BUILT
CORRECTIONS BY
CONTRACT NO.
DATE
NO CORRECTIONS THIS SHEET

CONTRACT CHANGE ORDER NO. ___
SHEET ___ OF ___

ALL DEPENDENT DIMENSIONS TO BE VERIFIED IN THE FIELD BEFORE COMMENCING OR FABRICATING ANY MATERIAL

DESIGN	K. Endow 9/88	State of CALIFORNIA DEPARTMENT OF TRANSPORTATION	STRUCTURES - DESIGN
DETAILS	K. Endow 9/88		
QUANTITIES			

BRIDGE NO. 57-M 57-0-0
POST MILE 2.0-2.1

SFOBB TOLL PLAZA MODIFICATIONS
ISLAND REMOVAL & PATCHING

SHEET S12

ORIGINAL SCALE IN INCHES FOR REDUCED PLANS 0 1 2 3 4

CU 34-037
WO 032801

Discard prints bearing earlier revision dates

REVISION DATES (PRELIMINARY STAGE ONLY)

I HEREBY CERTIFY THAT THIS IS A TRUE AND ACCURATE COPY OF THE ABOVE DOCUMENT TAKEN UNDER MY DIRECTION AND CONTROL ON THIS DATE IN SACRAMENTO, CALIFORNIA, PURSUANT TO AUTHORIZATION IN THE BOARD OF TRANSPORTATION

29X

This sheet replaces sheet no. 73 of 181 of plan approved March 29, 1985.

DIST.	COUNTY	ROUTE	POST MILES—TOTAL PROJECT	SHEET NO.	TOTAL SHEETS
04	Ala	80	23	78B3	15

DESIGN ENGINEER: J. Pancera — REGISTERED PROFESSIONAL ENGINEER

DATE APPROVED

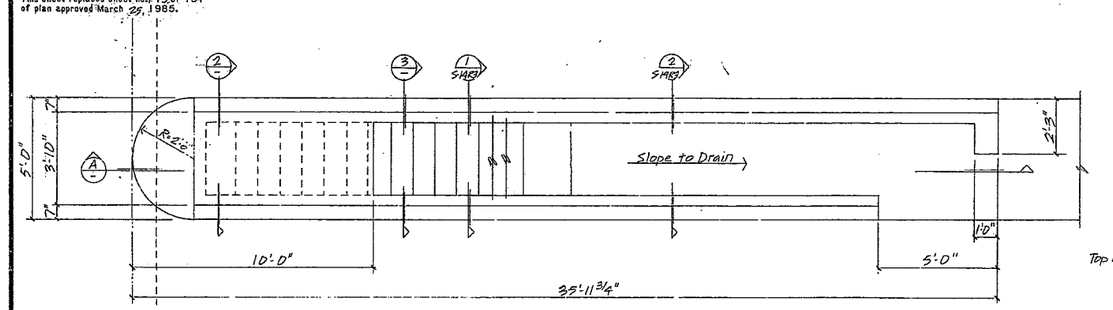

1 PLAN 1/2"=1'-0"

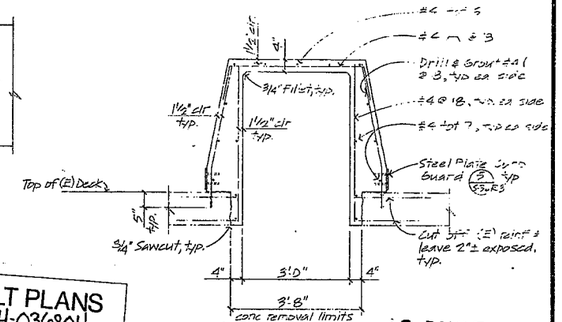

2 SECTION 3/4"=1'-0"

AS BUILT PLANS
Contract No. 04-0360804
Date Completed 5-14-91
Document No.

AS BUILT
CORRECTIONS BY Jim Vaughn
CONTRACT NO. 04-0360804
DATE 8/20/99 J.J.E. 8/99

NO CORRECTIONS THIS SHEET

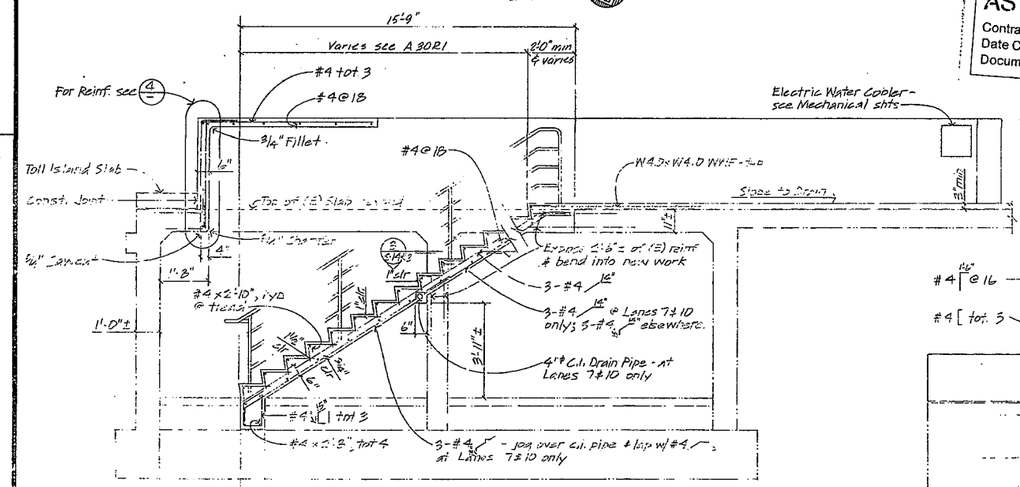

A PLAN

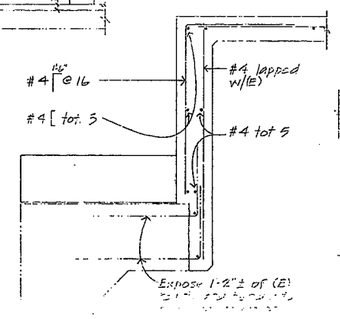

4 PART SECTION 1"=1'-0"

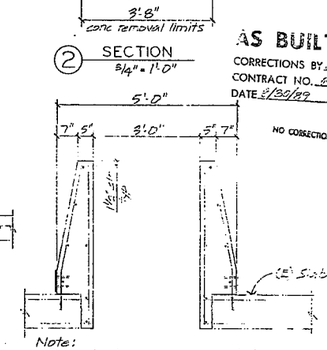

3 SECTION 3/4"=1'-0"

Note:
Except where shown or noted otherwise, details are sim to 2

NOTE:
THE CONTRACTOR SHALL VERIFY ALL DEPENDENT DIMENSIONS IN THE FIELD BEFORE ORDERING OR FABRICATING ANY MATERIAL.

NOTES:
1) See Electrical sht's for junction box locations & details not shown.
2) For [illegible]

CONTRACT CHANGE ORDER NO. ____
SHEET ___ OF ___

REPLACEMENT SHEET

DESIGN			
DETAILS			
QUANTITIES			

State of CALIFORNIA DEPARTMENT OF TRANSPORTATION

DIVISION OF STRUCTURES
STRUCTURE DESIGN

BRIDGE NO. 33M-0733
POST MILE 2.0-2.1

SFOBB TOLL PLAZA MODIFICATIONS
ISLAND STAIRS DETAILS I

SHEET 3-183 R3

ORIGINAL SCALE IN INCHES FOR REDUCED PLANS 0 1 2 3

CU 0400
WO 1

If marked red, license valid for usage date ——

REVISION DATES (MONTH DAY YEAR) ONLY

I HEREBY CERTIFY THAT THIS IS A TRUE AND ACCURATE COPY OF THE ABOVE DOCUMENT FILED WITH THE DIVISION AND/OR BUREAU OF ENGINEERING COMPUTER SERVICES PRIOR TO MICROFILMING.

DATE ____ TITLE ____

29X

This sheet replaces sheet no. 74 of 181 of plan approved March 25, 1985.

DIST.	COUNTY	ROUTE	POST MILES—TOTAL PROJECT	SHEET	TOTAL SHEETS
04	Ala	80	2.0	422	521

DESIGN ENGINEER

DATE APPROVED

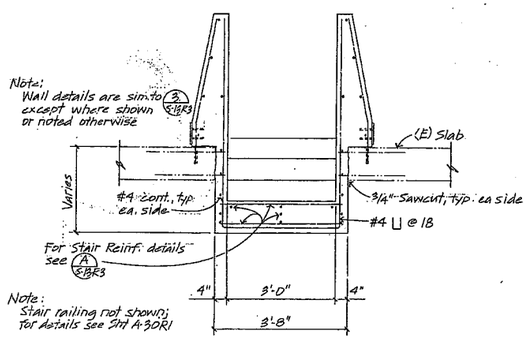

1 SECTION
3/4" = 1'-0"

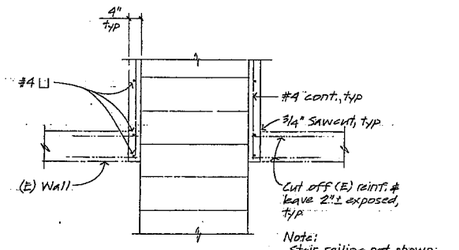

3 SECTION
3/4" = 1'-0"

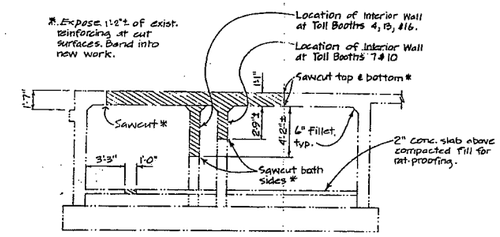

4B ELEVATION

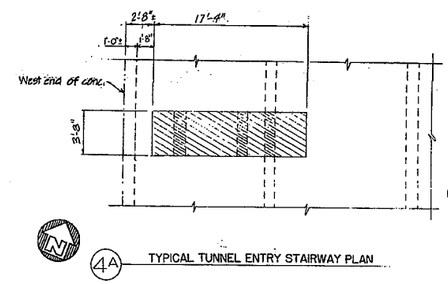

4A TYPICAL TUNNEL ENTRY STAIRWAY PLAN

Note:
At all walls & slab surfaces to be removed, sawcut min. 1/4" deep to provide neat joint.

Note:
For location of tunnel entry stairways, see shts S-2.R3 & S-3.R2.

4 ISLAND STAIR REMOVAL DETAILS
1/4" = 1'-0"

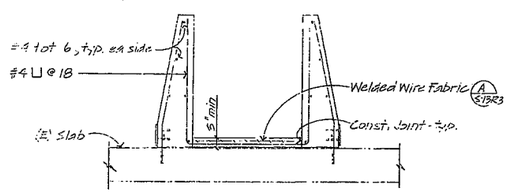

2 SECTION
3/4" = 1'-0"

AS BUILT
CORRECTIONS BY Jim Weiss
CONTRACT NO. 04-036804
DATE 8/30/89 E/B 7/4

NO CORRECTIONS THIS SHEET

AS BUILT PLANS
Contract No. 04-036804
Date Completed 5-14-91
Document No.

NOTE:
THE CONTRACTOR SHALL VERIFY ALL DEPENDENT DIMENSIONS IN THE FIELD BEFORE ORDERING OR FABRICATING ANY MATERIAL.

CONTRACT CHANGE ORDER NO.
SHEET OF

REPLACEMENT SHEET

DESIGN			State of CALIFORNIA DEPARTMENT OF TRANSPORTATION	DIVISION OF STRUCTURES STRUCTURE DESIGN
DETAILS				
QUANTITIES				

ORIGINAL SCALE IN INCHES FOR REDUCED PLANS 0 1 2 3

CU 04-0036
WO 04-0360

SFOBB TOLL PLAZA MODIFICATIONS
ISLAND STAIRS DETAILS 2

S-1.2 R3

29X

I HEREBY CERTIFY THAT THIS IS A TRUE AND ACCURATE COPY OF THE ABOVE DOCUMENT TAKEN UNDER MY DIRECTION AND CONTROL ON THIS DATE IN ACCORDANCE WITH CALIFORNIA PROCEDURE TO AUTHORIZATION BY THE DIRECTOR OF TRANSPORTATION

DIST	COUNTY	ROUTE	POST MILES TOTAL PROJECT	SHEET NO	TOTAL SHEETS
04	ALA	80	P.O	745	121

REGISTERED ENGINEER - CIVIL

5/25/88
PLANS APPROVAL DATE

REGISTERED PROFESSIONAL ENGINEER — K.F. Bridwell No. 27162 Exp. 6/30/90 CIVIL — STATE OF CALIFORNIA

CONTRACT CHANGE ORDER NO. 35

SHEET 3 OF 3

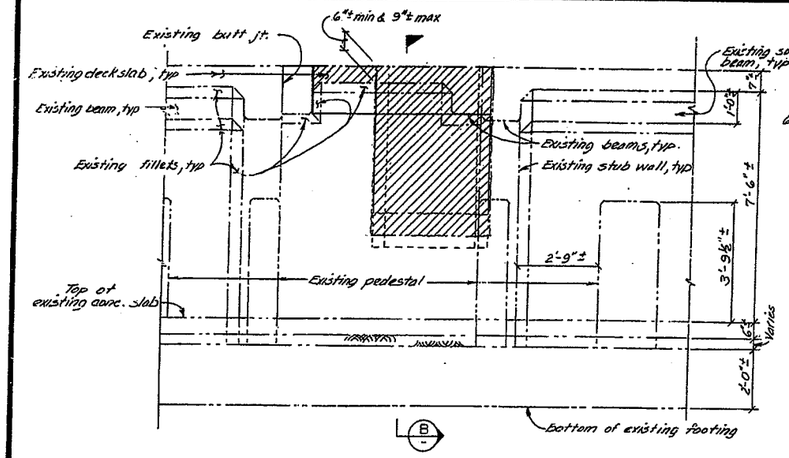

A ELEVATION
1/2" = 1'-0"

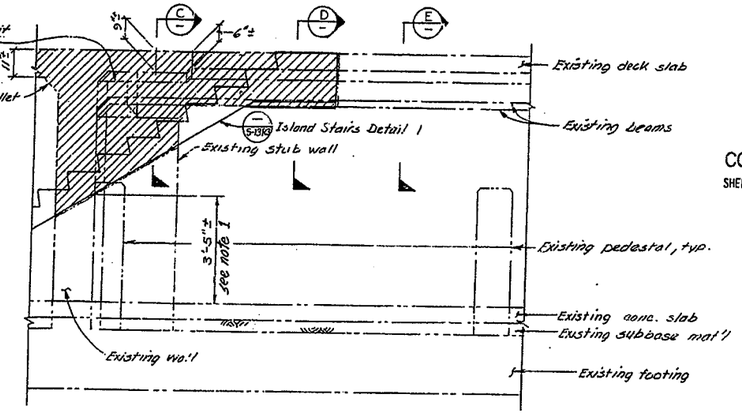

B ELEVATION SECTION
1/2" = 1'-0"

GENERAL NOTES:

1. Indicates limits of existing concrete removal. Existing reinforcement noted to remain shall be cleaned and undamanged.
2. Unless noted as existing, all material is to be new.
3. The contractor shall verify all controlling field dimensions before ordering or fabricating any material.
4. New concrete barriers at the top of stairway are not shown.
5. See "Island Stairs Details 1 & 2", sheets S-13R5 & S-14R3.

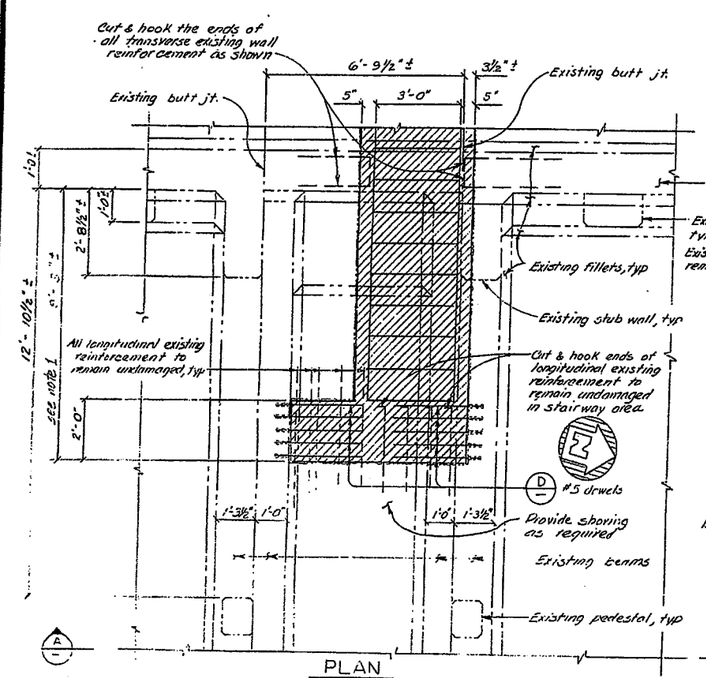

PLAN
1/2" = 1'-0"

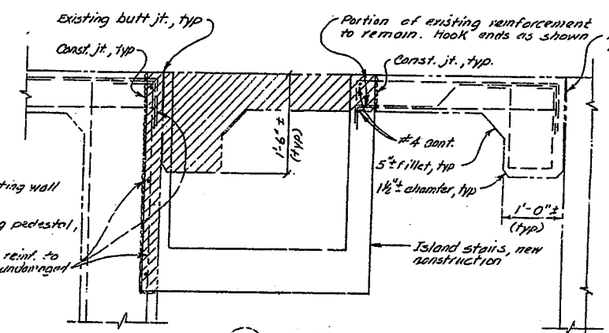

C SECTION
1" = 1'-0"

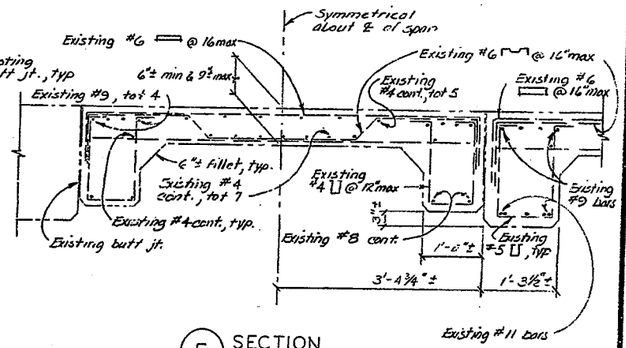

E SECTION
1" = 1'-0"

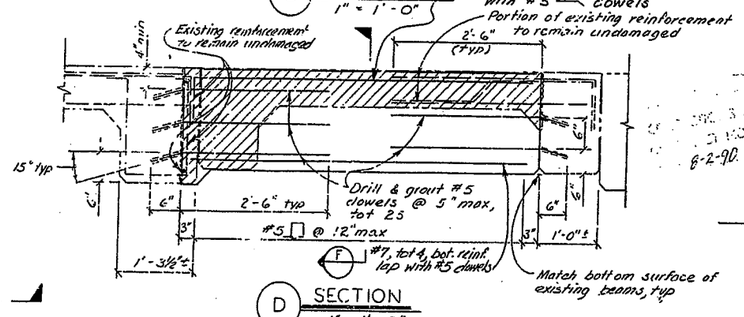

D SECTION
1" = 1'-0"

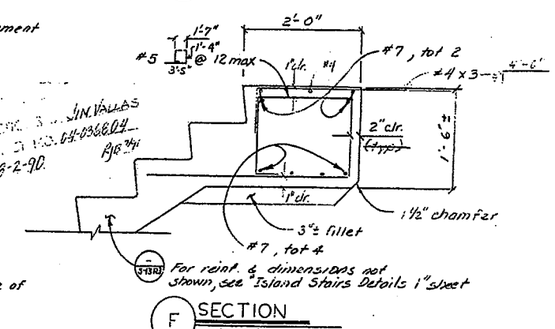

F SECTION
1" = 1'-0"

AS BUILT PLANS
Contract No. 04-036804
Date Completed 5-14-91
Document No.

DESIGN	By Joel E. Zeuslow 5/88	Checked Dennis D. Perchia 5/88	
DETAILS	By Joel E. Zeuslow 5/88	Checked Dennis D. Perchia 5/88	
QUANTITIES	By	Checked	

State of CALIFORNIA DEPARTMENT OF TRANSPORTATION

DIVISION OF STRUCTURES
STRUCTURE DESIGN
Dennis D. Perchia C 32049
PROJECT ENGINEER — REGISTERED CIVIL ENGINEER NO.

BRIDGE NO. 33M5785
POST MILE 2.0-2.1

SFOBB TOLL PLAZA MODIFICATIONS
ISLAND STAIR MODIFICATIONS

SHEET S-14 S

CU 04207
EA 036801

ORIGINAL SCALE IN INCHES FOR REDUCED PLANS 0 1 2 3

Disregard prints bearing earlier revision dates

REVISION DATES (PRELIMINARY STAGE ONLY) — SHEET — OF

05 050 2139A (5/86)

29X

I HEREBY CERTIFY THAT THIS IS A TRUE AND ACCURATE COPY OF THE ABOVE DOCUMENT TAKEN UNDER MY DIRECTION AND CONTROL ON THIS DATE IN SACRAMENTO, CALIFORNIA PURSUANT TO AUTHORIZATION BY THE DIRECTOR OF TRANSPORTATION

DATE 11/05/91 SIGNATURE Deborah Robinson TITLE SUPERVISOR OF MICROFILM SERVICES

DAS-33-78

This sheet replaces sheet no. 75 of 181 of plan approved March 29, 1985.

DIST.	COUNTY	ROUTE	POST MILES—TOTAL PROJECT	SHEET NO.	TOTAL SHEETS
04	ALA	80	2.0	75	181

DESIGN ENGINEER: [illegible] REGISTERED CIVIL ENGINEER
DATE APPROVED: March 29, 1985

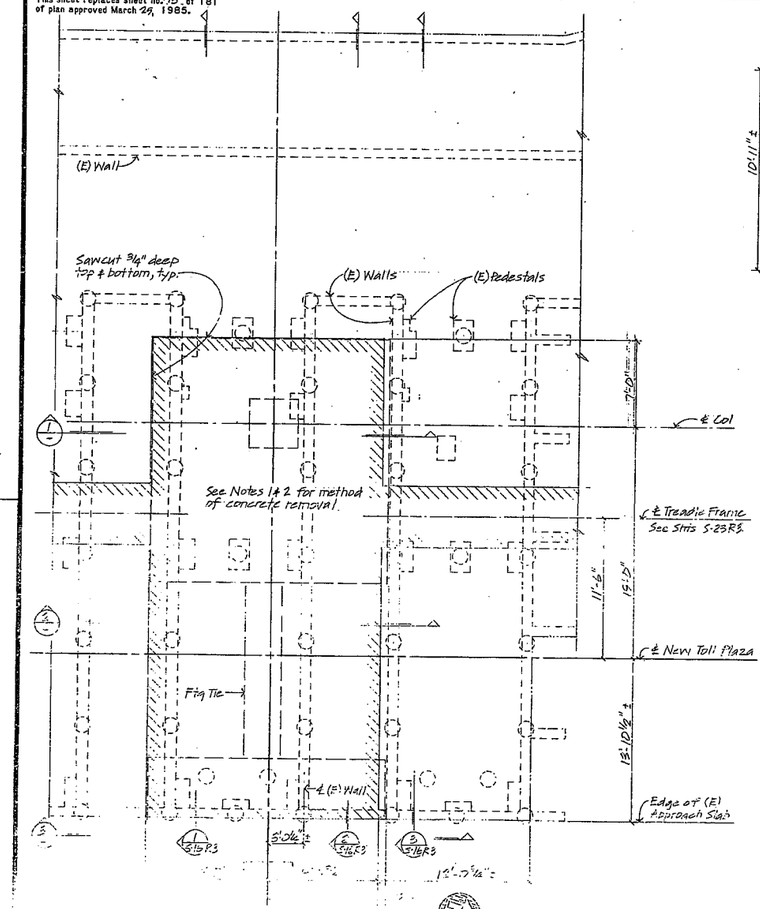

PEMOVAL PLAN

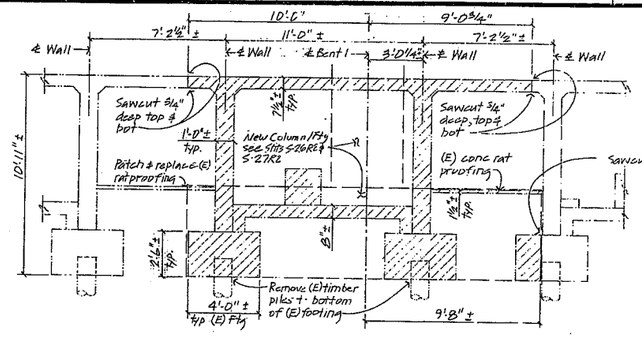

1 SECTION
3/8" = 1'-0"

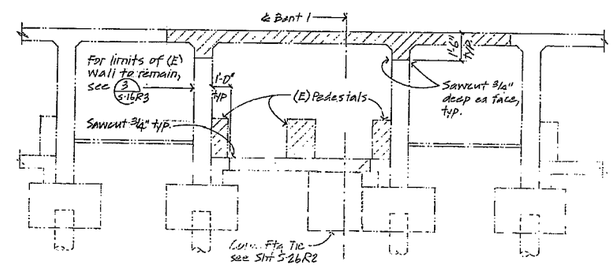

2 SECTION

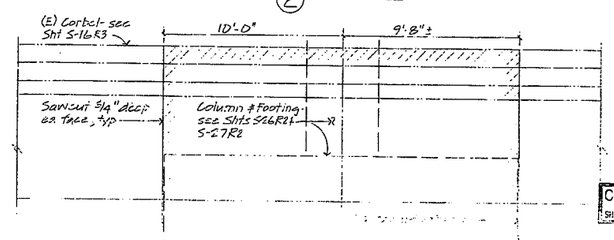

3 SECTION
3/8" = 1'-0"

AS BUILT PLANS
Contract No. 04-036804
Date Completed 5-14-91
Document No.

NOTES:

1) See "Reconstruction of Ent" sheets for all (E) reinf to remain in place and exposed for splices to new reinf.
2) Only hand-held removal equipment (to minimize damage to reinf) permitted at those locations where (E) reinf is to remain in place and exposed for splices. Heavy removal equipment allowed at all other locations.
3) [illegible] Indicates limits of removal of (E) concrete.
4) [illegible] indicates (E) structures
5) [illegible]
6) Concrete [illegible] removal [illegible] see [illegible]

NOTE:
THE CONTRACTOR SHALL VERIFY ALL DEPENDENT DIMENSIONS IN THE FIELD BEFORE ORDERING OR FABRICATING ANY MATERIAL.

AS BUILT
CORRECTIONS BY [illegible]
CONTRACT NO. [illegible]
DATE [illegible]
NO CORRECTIONS THIS SHEET

CONTRACT CHANGE ORDER NO. ____
SHEET ___ OF ___

REPLACEMENT SHEET

DESIGN	[illegible] 2/86	[illegible] 2/86	JCF 9/85	A. Tangvald 4/86	
DETAILS	[illegible]	[illegible]		A. Tangvald 4/86	
QUANTITIES					

State of CALIFORNIA
DEPARTMENT OF TRANSPORTATION
DIVISION OF STRUCTURES
STRUCTURE DESIGN
[illegible]
BRIDGE NO. 33M-795
POST MILE [illegible]

SFOBB TOLL PLAZA MODIFICATIONS
CONCRETE REMOVAL BENT 1

SHEET S-15 R3

ORIGINAL SCALE IN INCHES FOR REDUCED PLANS 0 1 2 3

CU 04237
WO 026401

Proposed plate bearing outline revision dates

REVISION DATES (FOR ORIGINAL STAGE ONLY)

29X

I HEREBY CERTIFY THAT THIS IS A TRUE AND ACCURATE COPY OF THE ABOVE DOCUMENT SHEET UNDER MY DIRECTION AND CONTROL ON THIS DATE IN SACRAMENTO, CALIFORNIA PURSUANT TO AUTHORIZATION BY THE [illegible] OF TRANSPORTATION

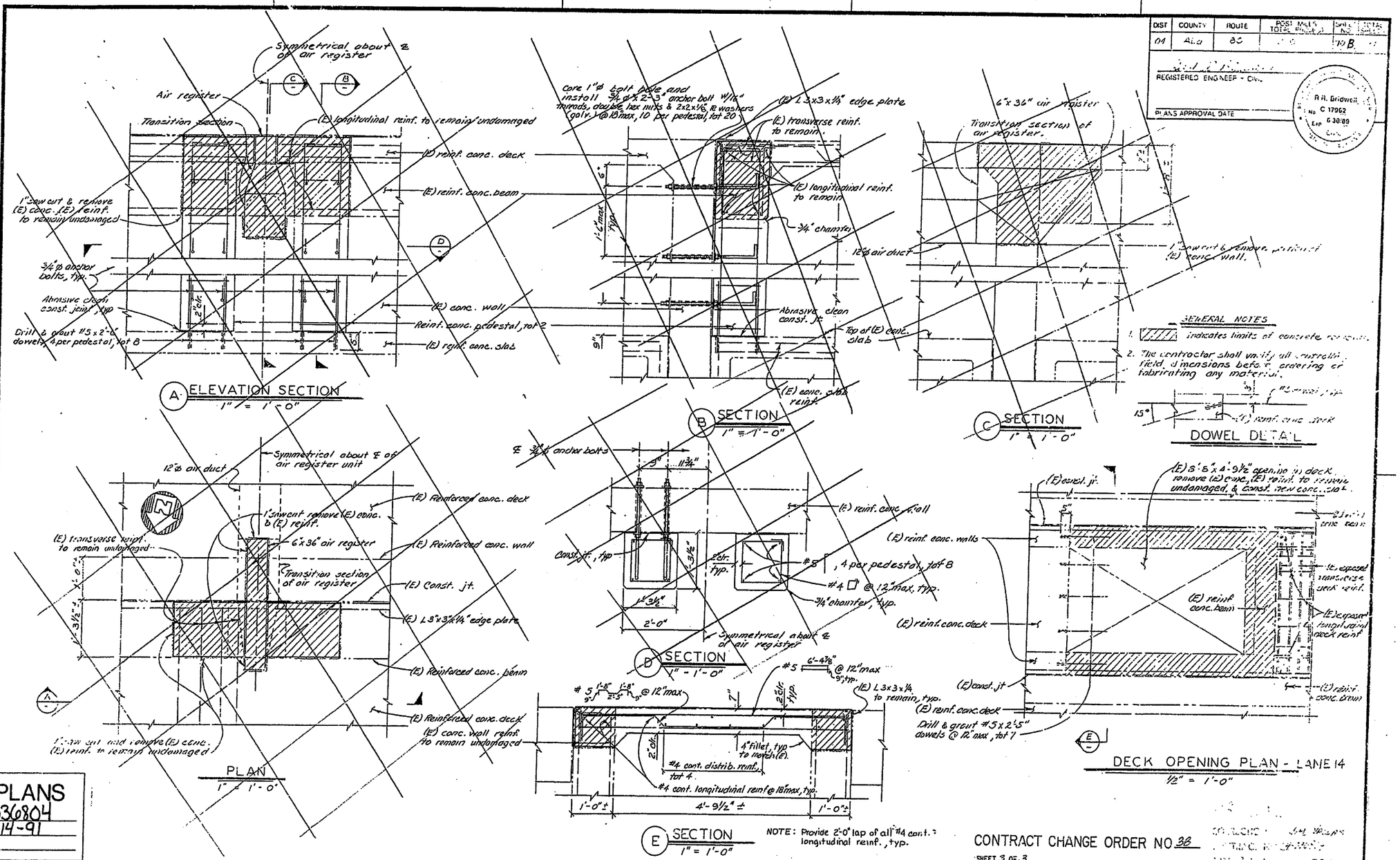

DIST	COUNTY	ROUTE	POST MILES TOTAL PROJECT	SHEET NO.	TOTAL SHEETS
04	Ala	80		70 B	

REGISTERED ENGINEER - CIVIL

PLANS APPROVAL DATE

R. R. Bridwell No. C 17962 Exp. 6/30/89

AS BUILT PLANS
Contract No. 04-036804
Date Completed 5-14-91
Document No.

CONTRACT CHANGE ORDER NO. 38

SHEET 3 OF 3

DESIGN	By Joel E. Escalon 6/88	Checked H. R. Bridwell 6/88	State of CALIFORNIA DEPARTMENT OF TRANSPORTATION	DIVISION OF STRUCTURES STRUCTURE DESIGN Joel E. Escalon 34606	BRIDGE NO. 33M5785 POST M.I.E. 2.0-2.1
DETAILS	By Joel E. Escalon 6/88	Checked H. R. Bridwell 6/88			SFOBB TOLL PLAZA MODIFICATIONS
QUANTITIES	By	Checked			REINFORCED CONCRETE DECK MODIFICATIONS

SHEET S10 S2

ORIGINAL SCALE IN INCHES FOR REDUCED PLANS 0 1 2 3

CU 04207
EA 036804

Disregard prints bearing earlier revision dates

REVISION DATES (PRELIMINARY STAGE ONLY)

29X

I HEREBY CERTIFY THAT THIS IS A TRUE AND ACCURATE COPY OF THE ABOVE DOCUMENT TAKEN UNDER MY DIRECTION AND CONTROL ON THIS DATE IN SACRAMENTO, CALIFORNIA PURSUANT TO AUTHORIZATION BY THE DIRECTOR OF TRANSPORTATION.

DATE 11/05/91 SIGNATURE Deborah Robinson TITLE SUPERVISOR OF MICROFILM SERVICES

This sheet replaces sheet no. 7.7 of 181 of plan approved March 25, 1985.

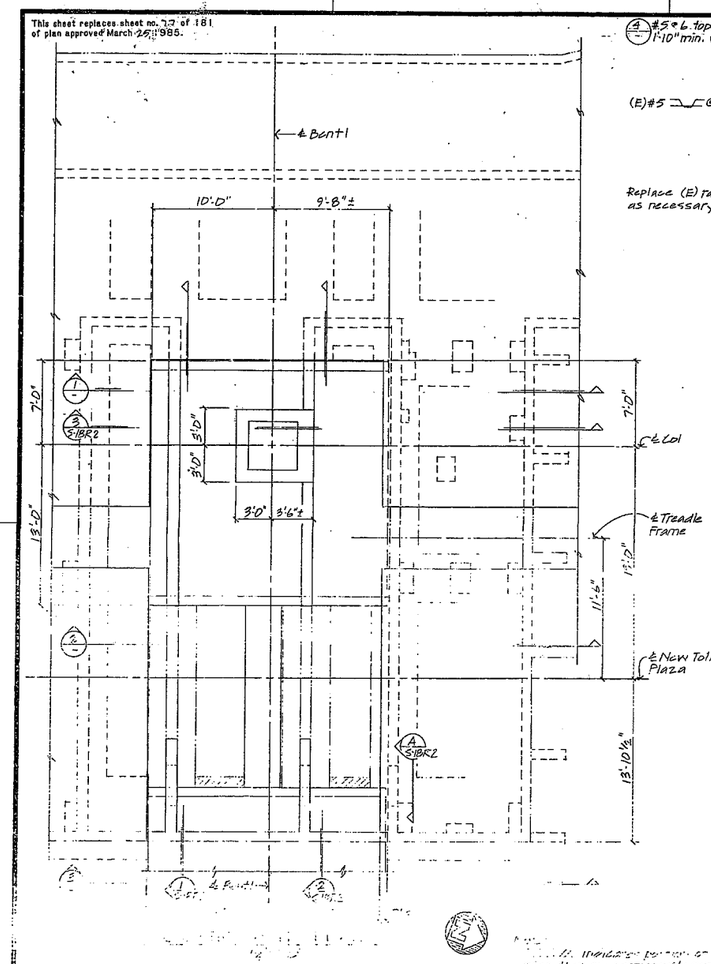

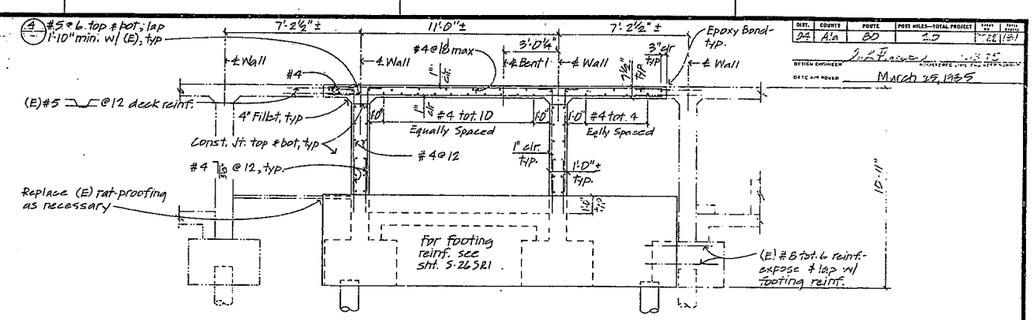

1 SECTION
3/8" = 1'-0"

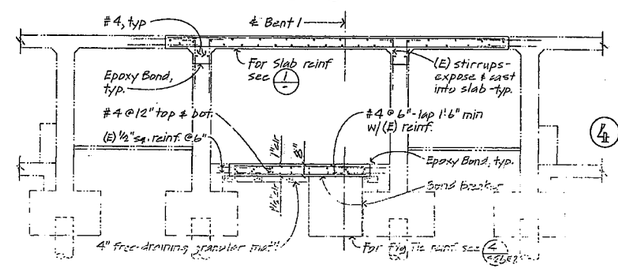

2 SECTION
3/8" = 1'-0"

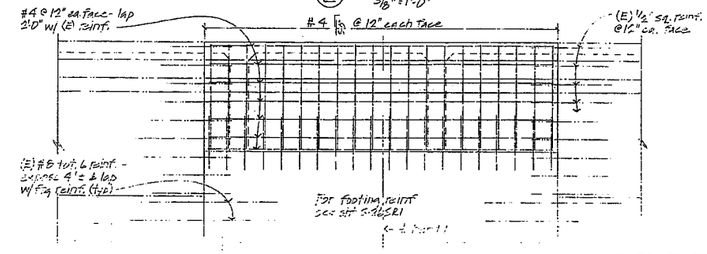

3 SECTION
3/8" = 1'-0"

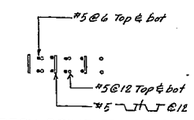

4 DECK REINF SPLICE DETAILS
No Scale

DIST.	COUNTY	ROUTE	POST MILES—TOTAL PROJECT	SHEET NO.	TOTAL SHEETS
04	Ala	880	1.0	1-26/181	

DESIGN ENGINEER
DATE APPROVED March 25, 1985

AS BUILT PLANS
Contract No. 04-036804
Date Completed 5-14-91
Document No.

AS BUILT
CORRECTIONS BY
CONTRACT NO.
DATE
NO CORRECTIONS THIS SHEET

NOTE:
THE CONTRACTOR SHALL VERIFY ALL EXPOSED DIMENSIONS TO THE FIELD BEFORE ORDERING MATERIAL OR FABRICATING ANY MEMBERS.

CONTRACT CHANGE ORDER NO.
SHEET OF

REPLACEMENT SHEET

DESIGN	Uncertified	Checked	
DETAILS	6F Firewall 1-85	Checked	
QUANTITIES		Checked	

State of CALIFORNIA
DEPARTMENT OF TRANSPORTATION

DIVISION OF STRUCTURES
STRUCTURE DESIGN

ORIGINAL SCALE IN INCHES FOR REDUCED PLANS

CU 34 207
WO 194 [illegible]

SFOBB TOLL PLAZA MODIFICATIONS
RECONSTRUCTION AT BENT 1

SHEET S-17 R2

29X

I HEREBY CERTIFY THAT THIS IS A TRUE AND ACCURATE COPY OF THE ABOVE DOCUMENT TAKEN UNDER MY DIRECTION AND CONTROL ON THIS DATE IN THE ORDINARY COURSE OF BUSINESS.

DIST.	COUNTY	ROUTE	POST MILES—TOTAL PROJECT	SHEET NO.	TOTAL SHEETS
04	ALA	80	2.0	7-19	

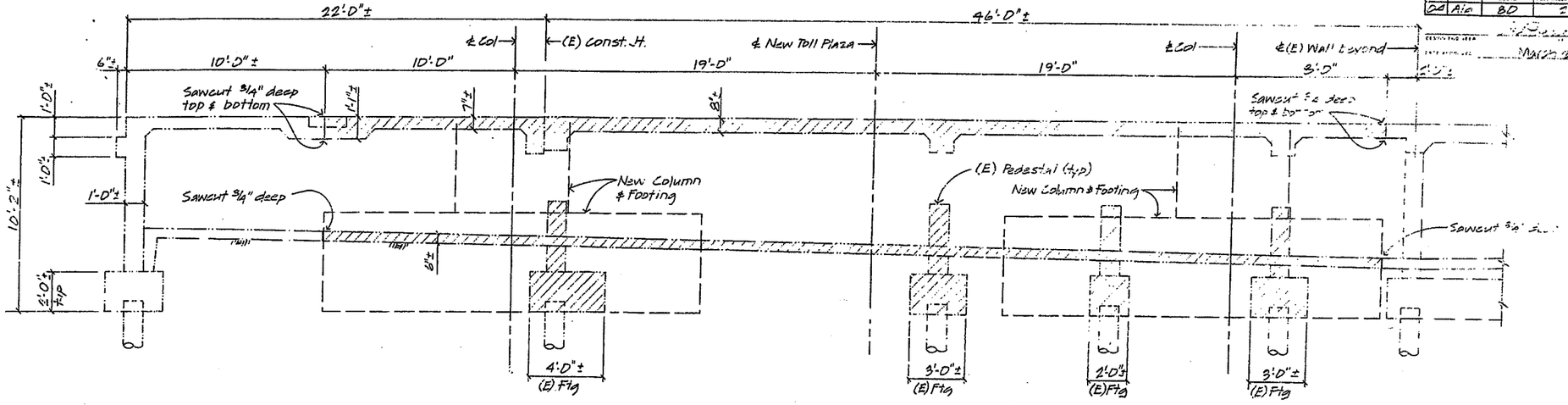

A SECTION
3/8" = 1'-0"

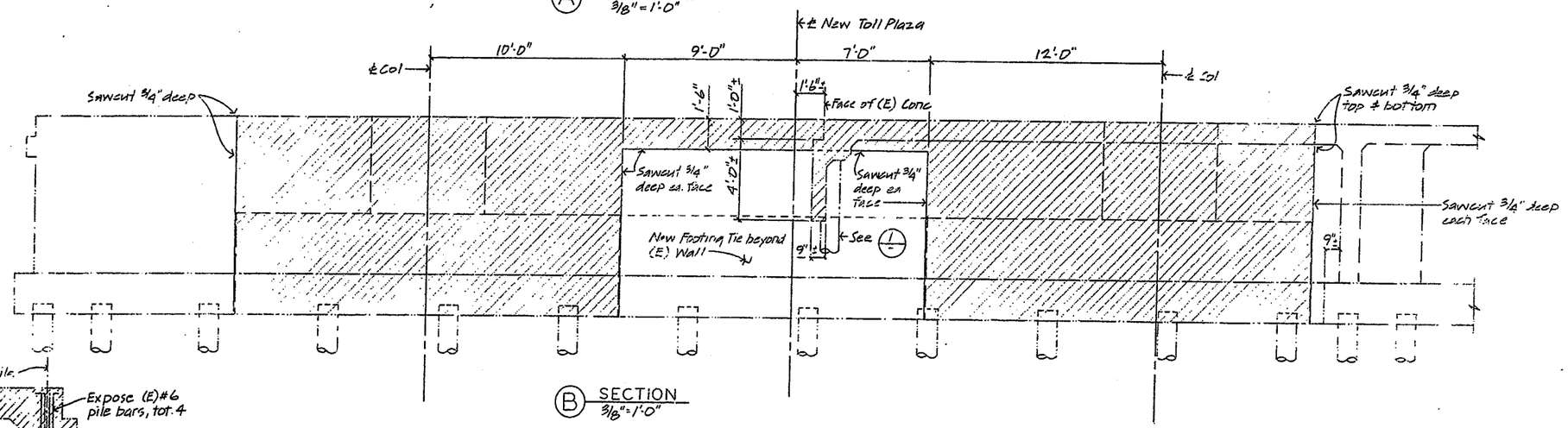

B SECTION
3/8" = 1'-0"

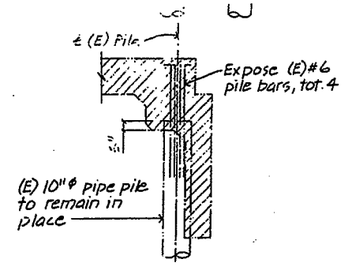

1 SECTION
1:10 Scale

AS BUILT PLANS
Contract No. 04-036804
Date Completed 5-14-91
Document No.

AS BUILT
CORRECTIONS BY Jim Villas
CONTRACT NO. 04-036804
DATE 8/1/90 RJE 7/91
NO CORRECTIONS THIS SHEET

NOTE:
THE CONTRACTOR SHALL VERIFY ALL DEPENDENT DIMENSIONS IN THE FIELD BEFORE ORDERING OR FABRICATING ANY MATERIAL.

CONTRACT CHANGE ORDER NO. 11
SHEET 60 OF 258

SUPPLEMENTAL SHEET

DESIGN	By DBS 6/83	Checked JLF 8/83	State of CALIFORNIA DEPARTMENT OF TRANSPORTATION	DIVISION OF STRUCTURES STRUCTURE DESIGN	BRIDGE NO. 33M-578S
DETAILS	By GF Bidwell 4-86	Checked R. Guyton 5/86		R. DECHIA C32049 PROJECT ENGINEER REGISTERED CIVIL ENGINEER NO	POST MILE 2.0-2.1
QUANTITIES	By	Checked			

SFOBB TOLL PLAZA MODIFICATIONS
CONCRETE REMOVAL BENT 2

SHEET S-19 S

CU 04207
WO 056801

ORIGINAL SCALE IN INCHES FOR REDUCED PLANS 0 1 2 3

Overgrand prints bearing earlier revision dates →

REVISION DATES (PRELIMINARY STAGE ONLY) 9/1/86 7/15/86 8/27/86 1/25/91

SHEET OF

DS 0123 (Rev. 6/85)

29X

I HEREBY CERTIFY THAT THIS IS A TRUE AND ACCURATE COPY OF THE ABOVE DOCUMENT TAKEN UNDER MY DIRECTION AND CONTROL ON THIS DATE IN SACRAMENTO, CALIFORNIA PURSUANT TO AUTHORIZATION BY THE DIRECTOR OF TRANSPORTATION.

DATE 11/05/91 SIGNATURE Deborah Robinson TITLE SUPERVISOR OF MICROFILM SERVICES

DAS-59-76

DIST.	COUNTY	ROUTE	POST MILES TOTAL PROJECT	SHEET NO	TOTAL SHEETS
04	ALA	5785	2.0-2.1	86A R2S	181

REGISTERED ENGINEER - CIVIL

PLANS APPROVAL DATE

REGISTERED PROFESSIONAL ENGINEER R.R. Bridwell No C 17962 Exp. 6/30/89 CIVIL STATE OF CALIFORNIA

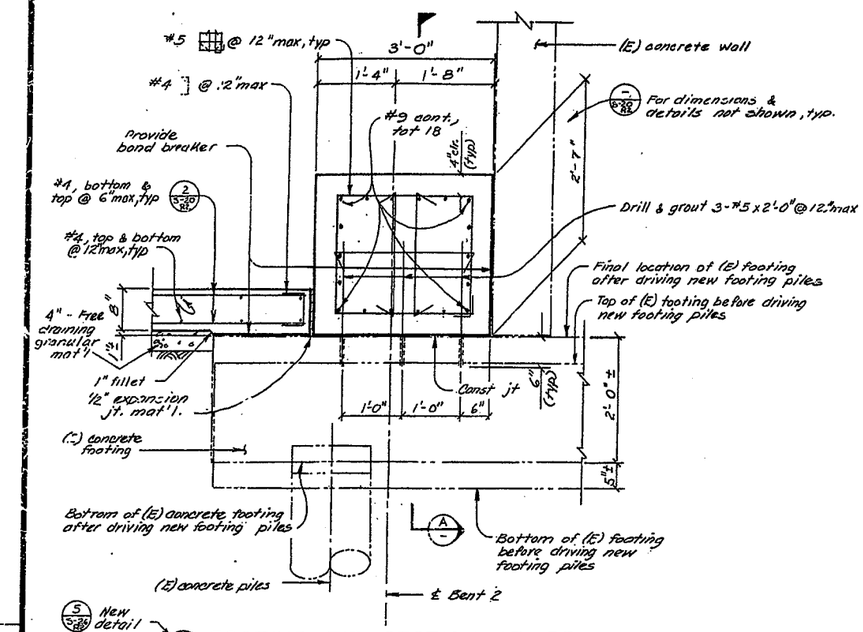

5 FOOTING TIE SECTION AT BENT 2

1" = 1' - 0"

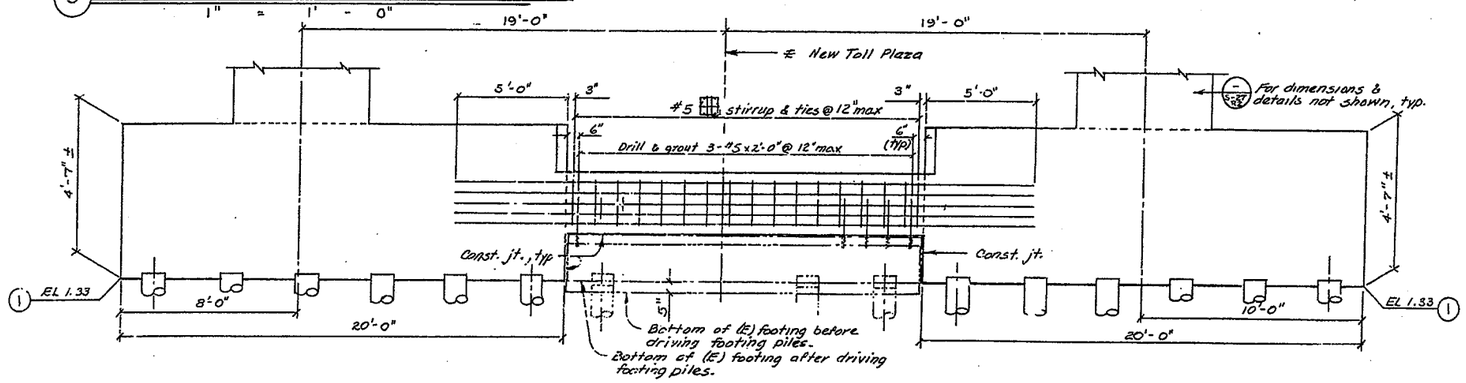

A SECTION

3/8" = 1'-0"

AS BUILT PLANS
Contract No. 04-036804
Date Completed 5-14-91
Document No.

NO CORRECTIONS THIS SHEET

GENERAL NOTES

1 Or, 3" below top of placed piles

CONTRACT CHANGE ORDER NO 39
SHEET 2 OF 2

NOTE:
THE CONTRACTOR SHALL VERIFY ALL CONTROLLING FIELD DIMENSIONS BEFORE ORDERING OR FABRICATING ANY MATERIAL.

DESIGN	By Joel E. Escalar 9/88	Checked Joe Esfandiari 9/88	State of CALIFORNIA DEPARTMENT OF TRANSPORTATION	DIVISION OF STRUCTURES STRUCTURE DESIGN Joel E. Escalar C34606 PROJECT ENGINEER REGISTERED CIVIL ENGINEER NO.	BRIDGE NO. 33M5785 POST MILE 2.0
DETAILS	By Joel E. Escalar 9/88	Checked Joe Esfandiari 9/88			
QUANTITIES	By	Checked			

SFOBB TOLL PLAZA MODIFICATIONS
CANOPY BENT 2 FOOTING DETAILS

SHEET S-26 R2S

DS OSD 2139A (5/86)

ORIGINAL SCALE IN INCHES FOR REDUCED PLANS 0 1 2 3

CU 04207
EA 036801

Disregard prints bearing earlier revision dates

REVISION DATES (PRELIMINARY STAGE ONLY)

SHEET OF

29X

I HEREBY CERTIFY THAT THIS IS A TRUE AND ACCURATE COPY OF THE ABOVE DOCUMENT TAKEN UNDER MY DIRECTION AND CONTROL ON THIS DATE IN SACRAMENTO, CALIFORNIA PURSUANT TO AUTHORIZATION BY THE DIRECTOR OF TRANSPORTATION.

DATE 11/05/91 SIGNATURE Deborah Robinson TITLE SUPERVISOR OF MICROFILM SERVICES

DAS-53-78

DIST	COUNTY	ROUTE	POST MILES TOTAL PROJECT	SHEET NO	TOTAL SHEETS
04	ALA	5785	2.0 - 2.1	86B R2A	181

REGISTERED ENGINEER - CIVIL

PLANS APPROVAL DATE

REGISTERED PROFESSIONAL ENGINEER T.L. Bertram No C 36148 Exp. 6-30-92 CIVIL STATE OF CALIFORNIA

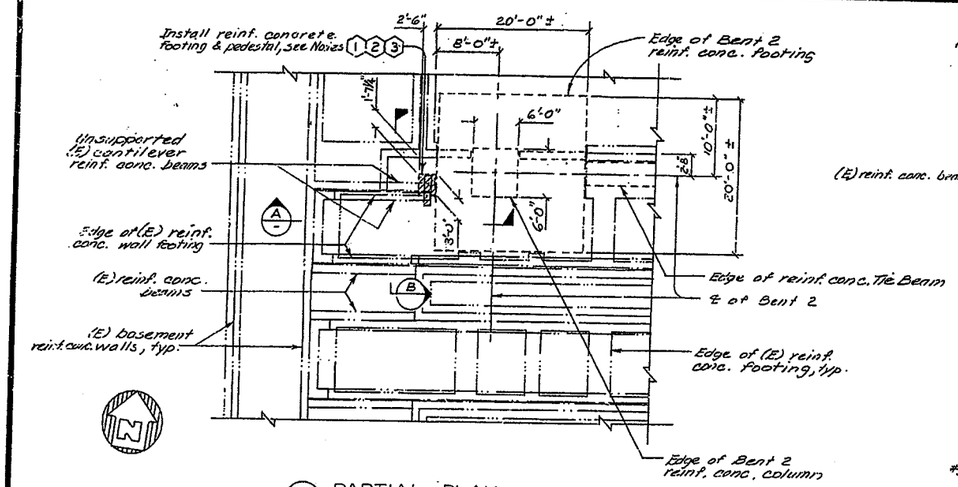

1 PARTIAL PLAN
1/8" = 1'-0"

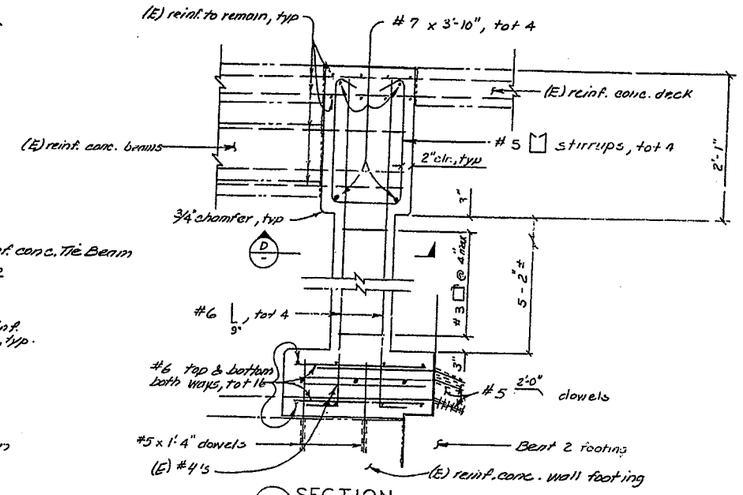

C SECTION
1" = 1'-0"

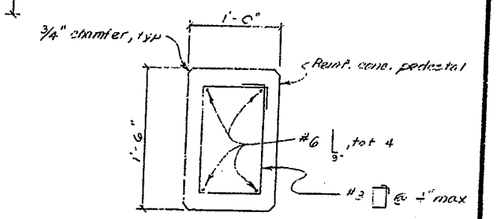

D SECTION
1½" = 1'-0"

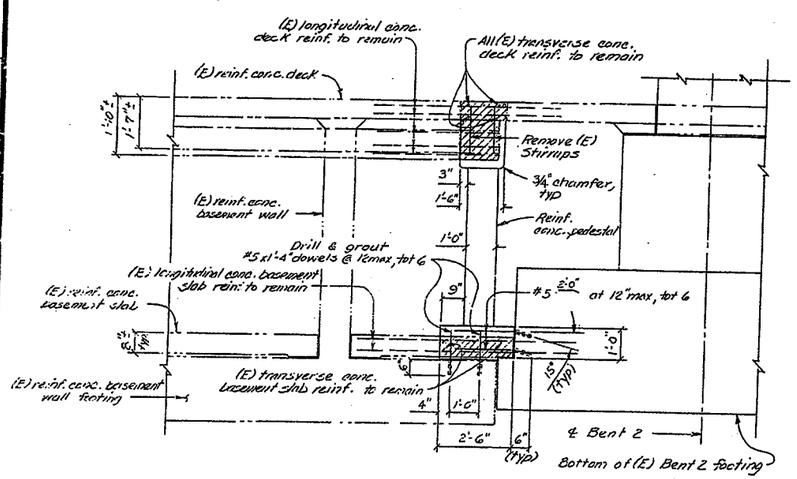

A SECTION
1/2" = 1'-0"

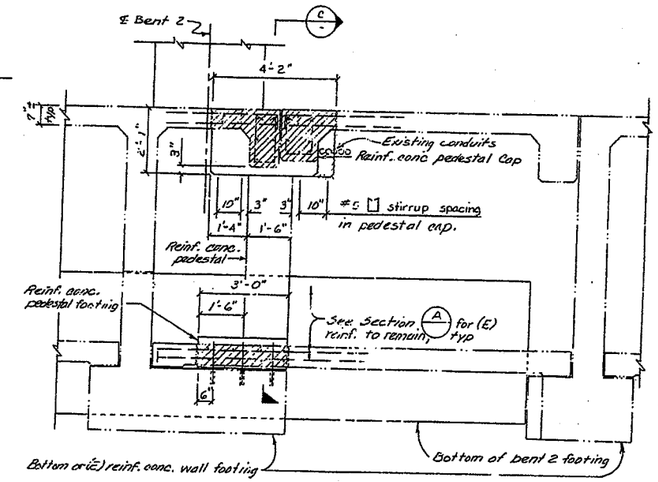

B SECTION
1/2" = 1'-0"

AS BUILT PLANS
Contract No. 04-036804
Date Completed 5-14-91
Document No.

AS BUILT PLANS OF Lou Ellen
CONTRACT NO. 04-036804
Date 5-14-91 RJB

CONTRACT CHANGE ORDER NO. 40
SHEET 2 OF 2

NOTES

1. Remove 2'-6" x 3'-0" portion of (E) basement concrete slab and 1'-6" x 4'-2" portion (E) concrete deck, (E) reinforcement to remain undamaged, typ.
2. Drill and grout #5 dowels into the (E) reinforced concrete wall footing & in the (E) Bent 2 reinforced concrete footing as shown in Section A.
3. Install 2'-6" x 3'-0" reinforced concrete footing, install 1'-0" x 1'-0" reinforced concrete pedestal, and install 1'-6" x 4'-2" reinforced concrete pedestal cap.
4. Indicates limits of (P) reinforced concrete removal.
5. Indicates existing structure.

NOTE:
The Contractor shall verify all controlling field dimensions and conditions before ordering or fabricating any material.

ADDITIONAL SHEET

	By	Checked	
DESIGN	Joel E. Gunderson 11/88	Lee E. Gunderson 11/88	State of CALIFORNIA DEPARTMENT OF TRANSPORTATION
DETAILS	Joel E. Gunderson 11/88	Lee E. Gunderson 11/88	
QUANTITIES			

DIVISION OF STRUCTURES
STRUCTURE DESIGN
Joel E. Gunderson 34608
PROJECT ENGINEER REGISTERED CIVIL ENGINEER NO.

BRIDGE NO. 33M5785
POST MILE 2.0

SFOBB TOLL PLAZA MODIFICATIONS
BEAM SUPPORT PEDESTAL AT BENT 2

3-26
R2A

DS 050 2139 (2/86)

ORIGINAL SCALE IN INCHES FOR REDUCED PLANS 0 1 2 3

CU 04207
EA 036804

Disregard prints bearing earlier revision dates

REVISION DATES (PRELIMINARY STAGE ONLY) | DATE | BY | OF

29X

I HEREBY CERTIFY THAT THIS IS A TRUE AND ACCURATE COPY OF THE ABOVE DOCUMENT TAKEN UNDER MY DIRECTION AND CONTROL ON THIS DATE IN SACRAMENTO, CALIFORNIA PURSUANT TO AUTHORIZATION BY THE DIRECTOR OF TRANSPORTATION.

DATE 11/05/91 SIGNATURE Deborah Robinson TITLE SUPERVISOR OF MICROFILM SERVICES

DIST	COUNTY	ROUTE	POST MILES TOTAL PROJECT	SHEET NO.	TOTAL SHEETS
04	Ala	80	2.0	86	181

DESIGN ENGINEER C.L. Pearson C13175 REGISTERED CIVIL ENGINEER NUMBER

DATE APPROVED March 25 1985

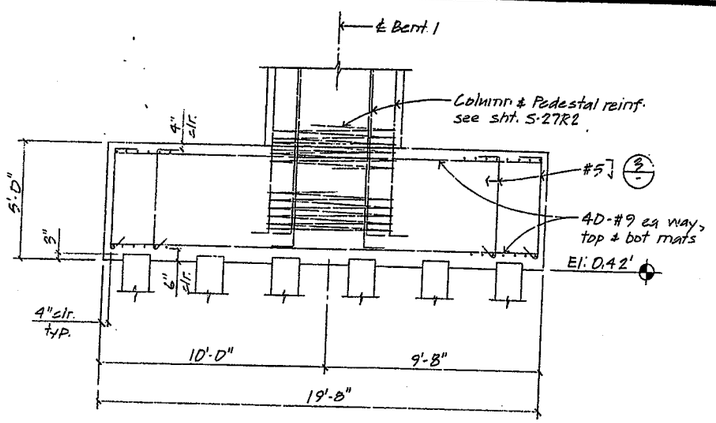

① BENT 1 FOOTING SECTION
3/8" = 1'-0"

Note: The Contractor shall verify that the bottom-of-new-footing elevations, EL: 0.42' at Bent1 and EL: 0.92' at Bent2, match the bottom of existing adjacent wall footings.

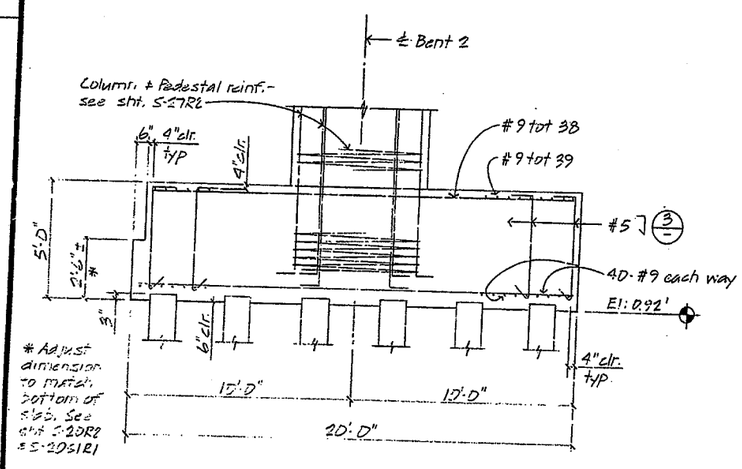

* Adjust dimension to match bottom of slab. See sht S-20R2 & S-20S1R1

② BENT 2 FOOTING SECTION
3/8" = 1'-0"

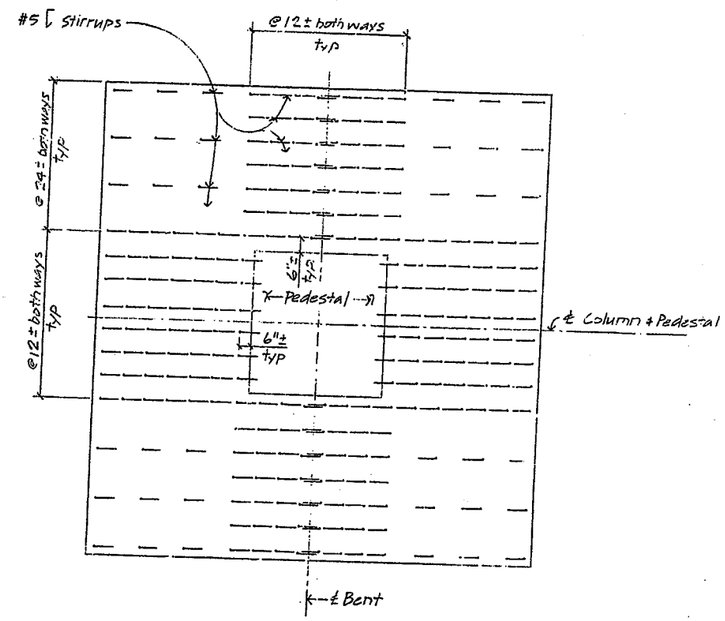

③ TYPICAL STIRRUP SPACING AT COLUMN FOOTING
No Scale

AS BUILT PLANS
Contract No. 04-036804
Date Completed 5-14-91
Document No.

AS BUILT
CORRECTIONS BY [illegible]
CONTRACT NO. 04-036804
DATE 8/1/90 [illegible]
NO CORRECTIONS THIS SHEET

CONTRACT CHANGE ORDER NO. 11
SHEET 7 OF 158

SUPPLEMENTAL SHEET

DESIGN	By DDP 7/83 BECCHIA 6/86	Checked BK 9/83	6/86
DETAILS	By GF Bidwell 5-86	Checked	6/86
QUANTITIES	By	Checked	

State of CALIFORNIA DEPARTMENT OF TRANSPORTATION

DIVISION OF STRUCTURES STRUCTURE DESIGN
BECCHIA C32049 PROJECT ENGINEER REGISTERED CIVIL ENGINEER NO.

BRIDGE NO. 33M5785
POST MILE 2.0-2.1

SFOBB TOLL PLAZA MODIFICATIONS
CANOPY BENT FOOTING DETAILS

SHEET S-26 SR1

ORIGINAL SCALE IN INCHES FOR REDUCED PLANS 0 1 2 3

CU 04207
EA 035601

Disregard prints bearing earlier revision dates

REVISION DATES (PRELIMINARY - STATE USE ONLY)

SHEET OF

DS OSD 2139 (2/86)

29X

I HEREBY CERTIFY THAT THIS IS A TRUE AND ACCURATE COPY OF THE ABOVE DOCUMENT TAKEN UNDER MY DIRECTION AND CONTROL ON THIS DATE IN SACRAMENTO, CALIFORNIA PURSUANT TO AUTHORIZATION BY THE DIRECTOR OF TRANSPORTATION.

DATE 11/05/91 SIGNATURE [illegible] TITLE SUPERVISOR OF MICROFILM SERVICES

DAS-SS-19

DIST	COUNTY	ROUTE	POST MILES TOTAL PROJECT	SHEET NO.	TOTAL SHEETS
04	Ala	80	2.0		141

DESIGN ENGINEER: W. F. Pearson C13175 (REGISTERED CIVIL ENGINEER NUMBER)

DATE APPROVED: March 28, 1986

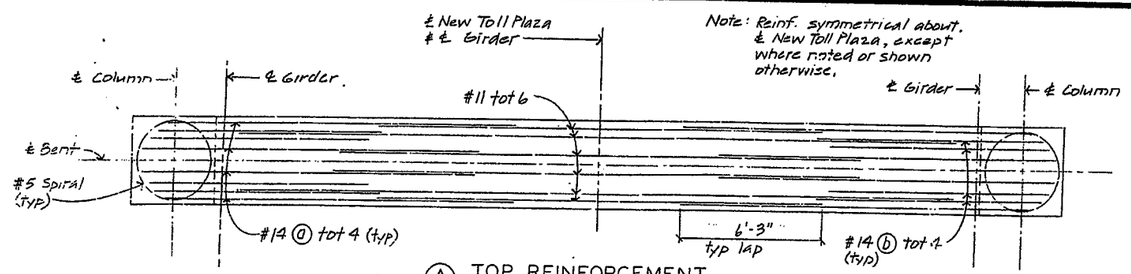

(A) TOP REINFORCEMENT
3/16" = 1'-0"

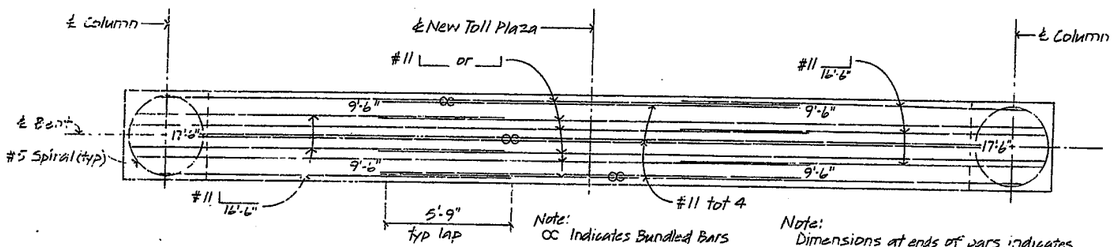

(B) BOTTOM REINFORCEMENT – BOT MAT
3/16" = 1'-0"

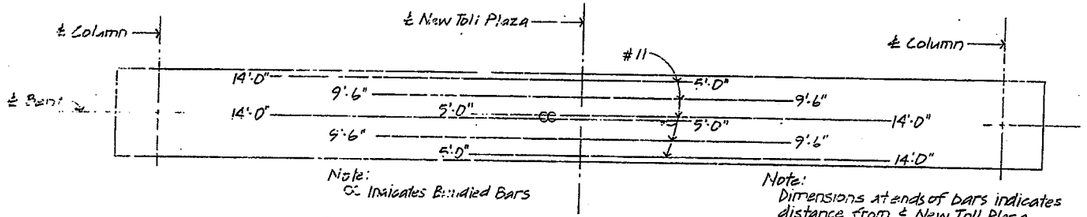

(C) BOTTOM REINFORCEMENT – TOP MAT
3/16" = 1'-0"

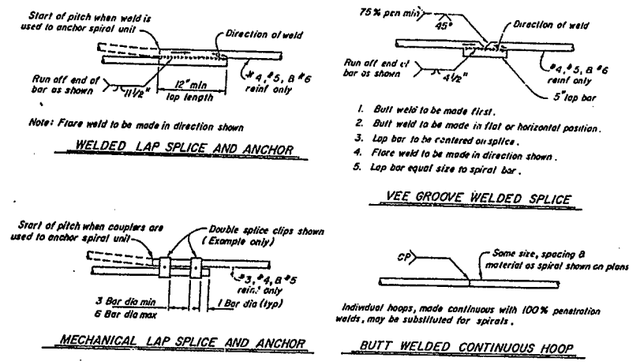

(2) BAR SPIRAL SPLICE & SPIRAL ANCHOR AND HOOP DETAIL
No Scale

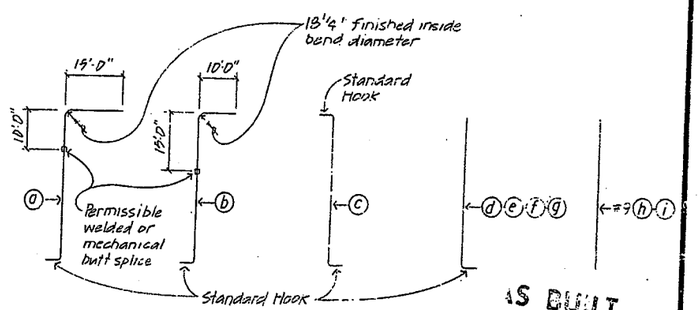

(4) BENDING DETAILS
No Scale

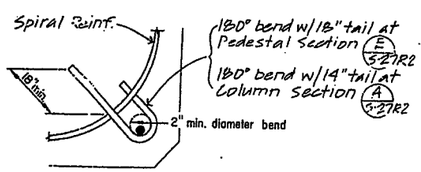

VERTICAL BAR OUTSIDE OF SPIRAL

(1) TIE BAR DETAIL
No Scale

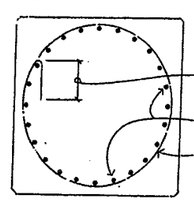

Note: 135° hook shall be placed around a longitudinal bar

(3) SPIRAL HOOK DETAILS
No Scale

AS BUILT PLANS
Contract No. 04-036804
Date Completed 5-14-91
Document No.

AS BUILT
CORRECTIONS BY
CONTRACT NO.
DATE
NO CORRECTIONS THIS SHEET

CONTRACT CHANGE ORDER NO. 11
SHEET 7 OF 158

SUPPLEMENTAL SHEET

DESIGN	Dr. DDR 7/83	Checked BLC 9/83		
DETAILS	Dr. G.F. Bidwell 5-86	Checked Jeff Olson 6/86		
QUANTITIES	Dr.	Checked Jeff Olson 6/86		

State of CALIFORNIA DEPARTMENT OF TRANSPORTATION

DIVISION OF STRUCTURES
STRUCTURE DESIGN
LBecchia (PROJECT ENGINEER) C32049 (REGISTERED CIVIL ENGINEER NO.)

BRIDGE NO. 33M-5785
POST MILE 2.0-2.1

SFOBB TOLL PLAZA MODIFICATIONS
CANOPY BENT DETAILS I

SHEET S-27 SR1

CU 04207
EA 036801

ORIGINAL SCALE IN INCHES FOR REDUCED PLANS 0 1 2 3

Divergent prints bearing earlier revision dates

REVISION DATES (PRELIMINARY STAGE ONLY) 4-1-86 6/16/86

SHEET OF

29X

I HEREBY CERTIFY THAT THIS IS A TRUE AND ACCURATE COPY OF THE ABOVE DOCUMENT TAKEN UNDER MY DIRECTION AND CONTROL ON THIS DATE IN SACRAMENTO, CALIFORNIA PURSUANT TO AUTHORIZATION BY THE DIRECTOR OF TRANSPORTATION.

DATE 11/05/91 SIGNATURE Deborah Robinson TITLE SUPERVISOR OF MICROFILM SERVICES

DIST.	COUNTY	ROUTE	POST MILES—TOTAL PROJECT
04	ALA	80	2.0

March 29, 1985

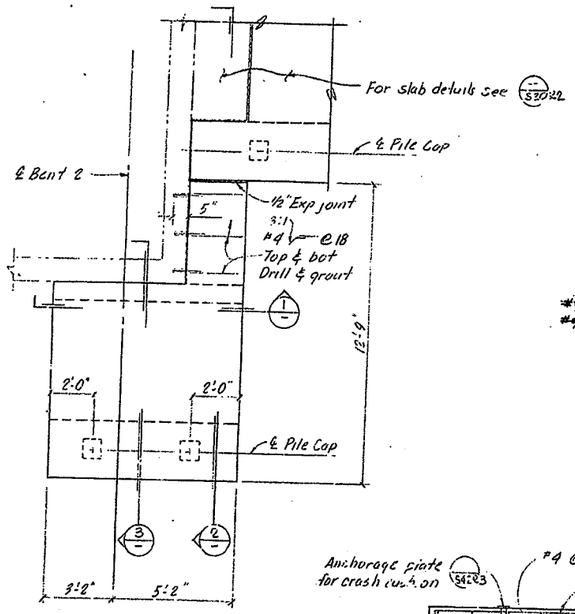

(A) PLAN
3/8" = 1'-0"

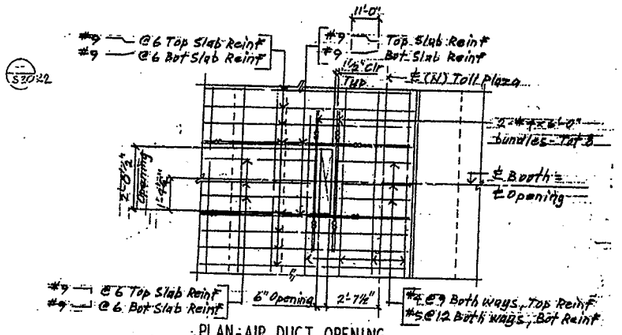

PLAN - AIR DUCT OPENING
No Scale

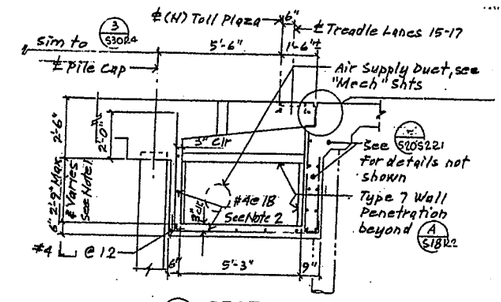

(6) SECTION
3/8" = 1'-0"

Note: Slope floor to drain from each wall (10) to be 1" in. of Type 7 wall penetration.

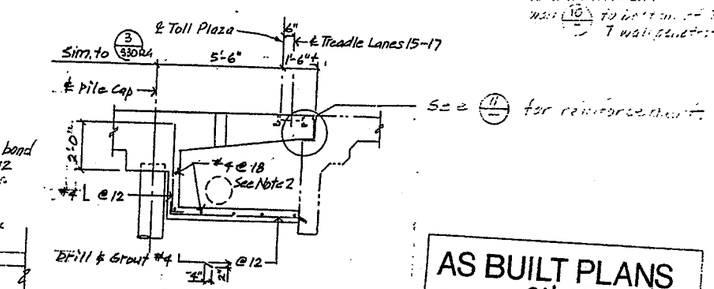

(9) SECTION
3/8" = 1'-0"

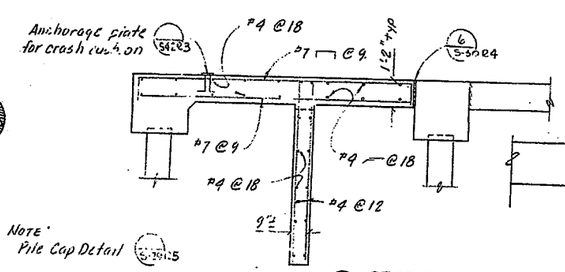

Note: Pile Cap Detail 3/301-5

(2) SECTION
3/8" = 1'-0"

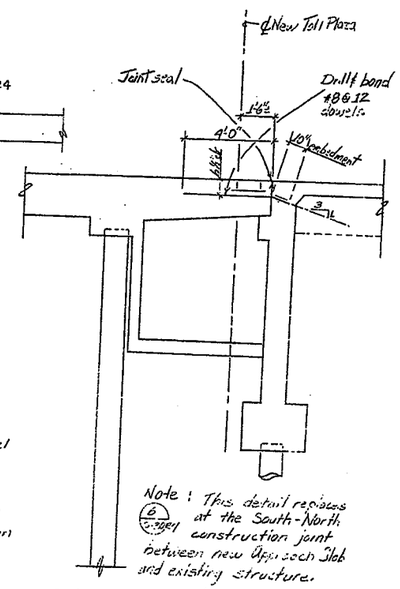

Note: This detail replaces (6) 3/530-24 at the South-North construction joint between new Approach Slab and existing structure.

Section @ Toll Booth Lanes #6, 7, 8, 9 & 10
3/8" = 1'-0"

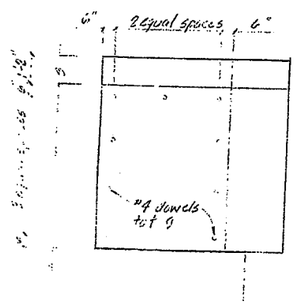

(1) WALL ELEVATION
3/8" = 1'-0"

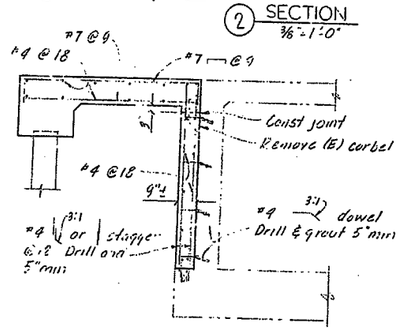

(3) SECTION
3/8" = 1'-0"

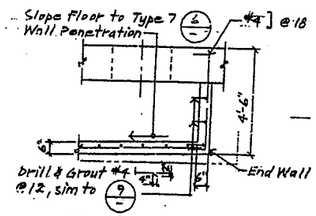

(10) SECTION
3/8" = 1'-0"

(11) REVISED JOINT DETAIL △

AS BUILT PLANS
Contract No. 04-036804
Date Completed 5-14-91
Document No.

AS BUILT
CORRECTIONS BY
CONTRACT NO.
DATE 7-31-96

△	Revised joint details per C.C.O. 33	D.L.E. 7/25/96

CONTRACT CHANGE ORDER NO. 11
SHEET 76 OF 158

SUPPLEMENTAL SHEET

DESIGN	M.N. Guyno 6/86	Checked R. Becchia 6/86	
DETAILS	Sakamoto 6/86	Checked R. Becchia 6/86	
QUANTITIES		Checked	

State of CALIFORNIA DEPARTMENT OF TRANSPORTATION

DIVISION OF STRUCTURES
STRUCTURE DESIGN
R. Becchia — PROJECT ENGINEER
C32049 — REGISTERED CIVIL ENGINEER NO.

BRIDGE NO. 33M5785
POST MILE 2.0-2.1

SFFOB TOLL PLAZA MODIFICATIONS
APPROACH SLAB DETAILS

SHEET S-30 SR1

ORIGINAL SCALE IN INCHES FOR REDUCED PLANS 0 1 2 3

CU 04-207
WO 0 5/9/01

Horizontal notes begining earliest revision dates →

REVISION DATES (PRELIMINARY STAGE ONLY)

29 X

I HEREBY CERTIFY THAT THIS IS A TRUE AND ACCURATE COPY OF THE ABOVE DOCUMENT TAKEN UNDER MY DIRECTION AND CONTROL ON THIS DATE IN SACRAMENTO, CALIFORNIA PURSUANT TO AUTHORIZATION BY THE DIRECTOR OF TRANSPORTATION.

DATE 11/05/91 SIGNATURE Michael Robinson TITLE SUPERVISOR OF MICROFILM SERVICES

DIST	COUNTY	ROUTE	POST MILES TOTAL PROJECT	SHEET NO	TOTAL SHEETS
04	Ala	80	20	33A S1R1	181

DESIGN ENGINEER — REGISTERED CIVIL ENGINEER NUMBER

DATE APPROVED March 25, 1985

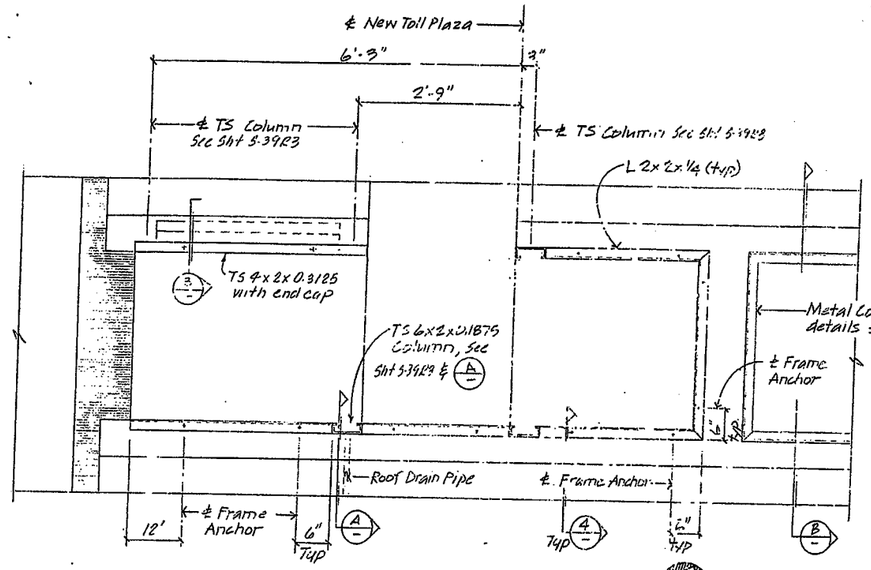

1 TOLL BOOTH FRAMING PLAN
1" = 1'-0"

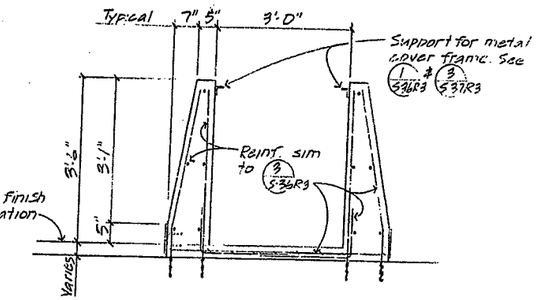

B SECTION
3/4" = 1'-0"

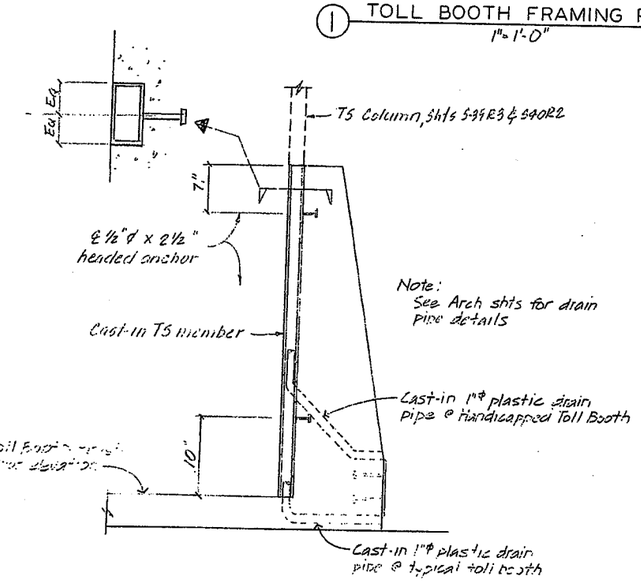

A FRAME ANCHOR AT COLUMN SUPPORT
1 1/2" = 1'-0"

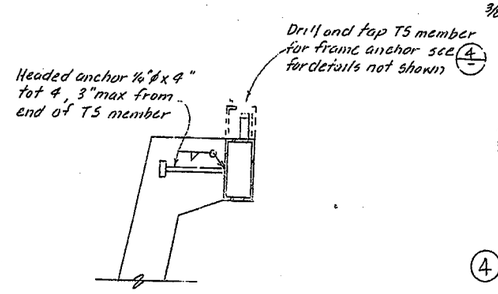

3 SECTION
3" = 1'-0"

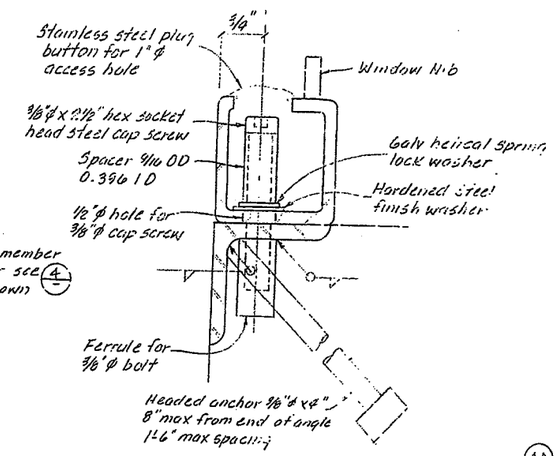

4 FRAME ANCHOR AT TOP OF CONC WALL
Full Scale

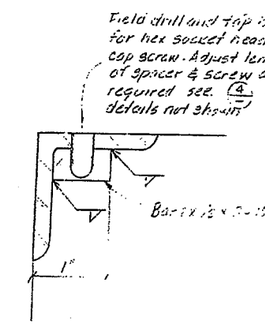

4A ALTERNATIVE FRAME ANCHOR DETAIL

NOTE:
All metalwork embedded in concrete, except for stainless steel, shall be hot-dip galvanized after fabrication.

AS BUILT PLANS
Contract No. 04-036804
Date Completed 5-14-91
Document No.

AS BUILT
CORRECTIONS BY [illegible]
CONTRACT NO. 04-036804
DATE 8-2-90
NO CORRECTIONS THIS SHEET

CONTRACT CHANGE ORDER NO 11
SHEET 23 OF 158

SUPPLEMENTAL SHEET

DESIGN	By Anthony Gagino 6/86	Checked John Boda 6/86	
DETAILS	By GF Bidwell 6-86	Checked John Boda 6/86	
QUANTITIES	By	Checked	

State of CALIFORNIA
DEPARTMENT OF TRANSPORTATION

DIVISION OF STRUCTURES
STRUCTURE DESIGN
PROJECT ENGINEER — REGISTERED CIVIL ENGINEER NO
C32049

BRIDGE NO. 33M5785
POST MILE 2.0-2.1

SFOBB TOLL PLAZA MODIFICATIONS
TOLL BOOTH BASE DETAILS I

SHEET S-36 S1R1

ORIGINAL SCALE IN INCHES FOR REDUCED PLANS 0 1 2 3

CU 04207
EA 036801

Disregard prints bearing earlier revision dates

REVISION DATES (PRELIMINARY STAGE ONLY)

DS OSD 2139 (2-86)

29X

I HEREBY CERTIFY THAT THIS IS A TRUE AND ACCURATE COPY OF THE ABOVE DOCUMENT TAKEN UNDER MY DIRECTION AND CONTROL ON THIS DATE IN SACRAMENTO, CALIFORNIA PURSUANT TO AUTHORIZATION BY THE DIRECTOR OF TRANSPORTATION

DATE 11/05/91 — SIGNATURE [illegible] — TITLE SUPERVISOR OF MICROFILM SERVICES

DIST.	COUNTY	ROUTE	POST MILES—TOTAL PROJECT	SHEET NO.	TOTAL SHEETS
04	SF	[illegible]	[illegible]	8	

DESIGN ENGINEER [illegible]

DATE APPROVED [illegible]

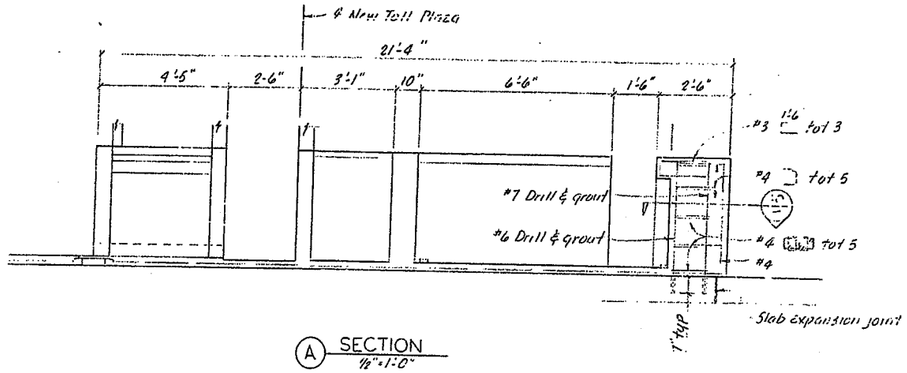

(A) SECTION
1/2" = 1'-0"

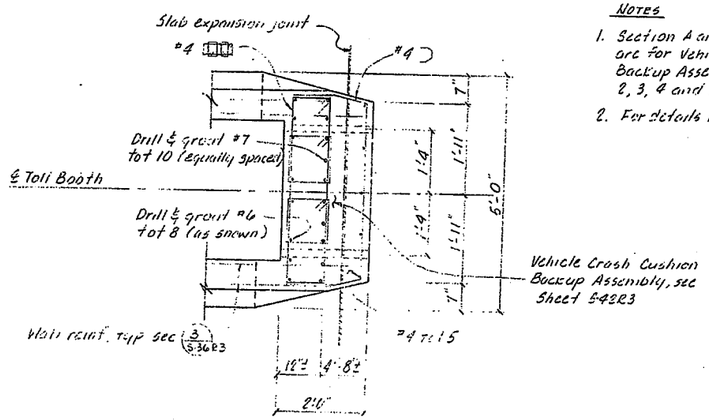

(10) SECTION
3/4" = 1'-0"

NOTES

1. Section A and Section 10 details are for Vehicle Crash Cushion Backup Assembly at Toll Booths 2, 3, 4 and 5
2. For details not shown see 5 S0R3

AS BUILT PLANS
Contract No. 04-0360804
Date Completed 5-14-91
Document No. _____

AS BUILT
CORRECTIONS BY JIM VALLIS
CONTRACT NO. 04-0360804
DATE 8-3-93
NO CORRECTIONS THIS SHEET

CONTRACT CHANGE ORDER NO. 11
SHEET 84 OF 158

SUPPLEMENTAL SHEET

DESIGN	By [illegible]	Checked R. Pecchia 6/86	
DETAILS	By [illegible] 4/86	Checked R. Pecchia 6/86	
QUANTITIES	By	Checked	

State of CALIFORNIA
DEPARTMENT OF TRANSPORTATION

DIVISION OF STRUCTURES
STRUCTURE DESIGN
R. Pecchia C32049
PROJECT ENGINEER REGISTERED CIVIL ENGINEER NO.

BRIDGE NO. 33W157BS
POST MILE 2.0-2.1

SFOBB TOLL PLAZA MODIFICATIONS
TOLL BOOTH BASE DETAILS I (SUPPLEMENT)

SHEET S-36 S2R1

DS 0139 (Rev 6/85)

ORIGINAL SCALE IN INCHES FOR REDUCED PLANS 0 1 2 3

CU 04 237
WO 036801

Disregard prints bearing earlier revision dates

REVISION DATES (PRELIMINARY STAGE ONLY) 5/5/86 11/15/86

DIST. | CO. | RTE. | POST MILE

29X

I HEREBY CERTIFY THAT THIS IS A TRUE AND ACCURATE COPY OF THE ABOVE DOCUMENT TAKEN UNDER MY DIRECTION AND CONTROL ON THIS DATE IN SACRAMENTO, CALIFORNIA PURSUANT TO AUTHORIZATION BY THE DIRECTOR OF TRANSPORTATION.

DATE 11/05/91 SIGNATURE Deborah Robinson TITLE SUPERVISOR OF MICROFILM SERVICES

DAS-55-78

DIST.	COUNTY	ROUTE	POST MILES—TOTAL PROJECT	SHEET NO.	TOTAL SHEETS
04	Ala	80	2.0	[illegible]	181

DESIGN ENGINEER: R. [illegible]

DATE APPROVED: March [illegible] 1985

AS BUILT
CORRECTIONS BY [illegible]
CONTRACT NO. [illegible]
DATE [illegible]

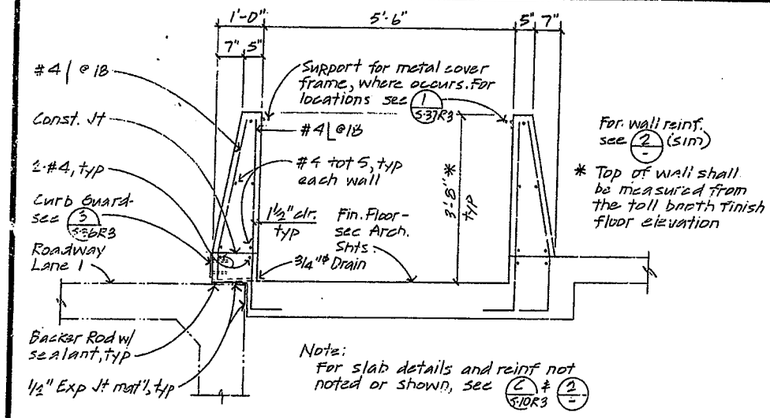

1 SECTION 3/4" = 1'-0"

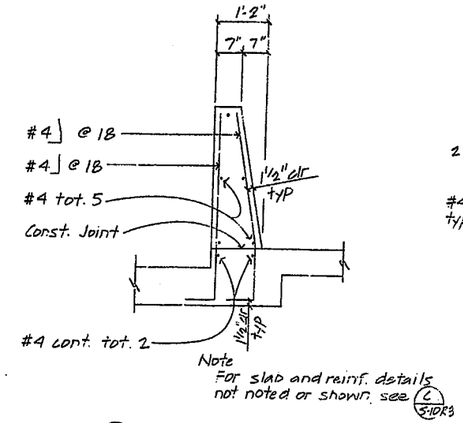

2 SECTION 3/4" = 1'-0"

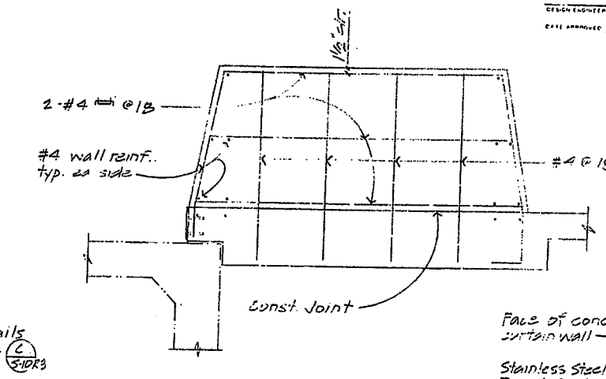

3 SECTION 3/4" = 1'-0"

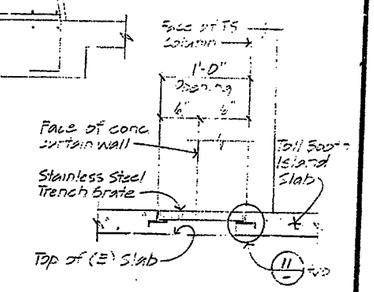

9 SECTION 1½" = 1'-0"

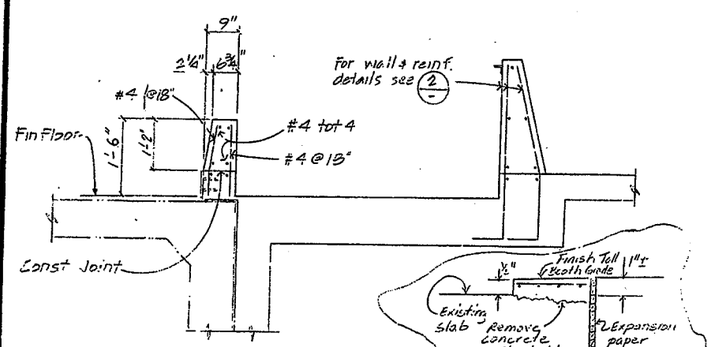

4 SECTION 3/4" = 1'-0"

13 SECTION AT T.B.1 ENTRANCE NO SCALE

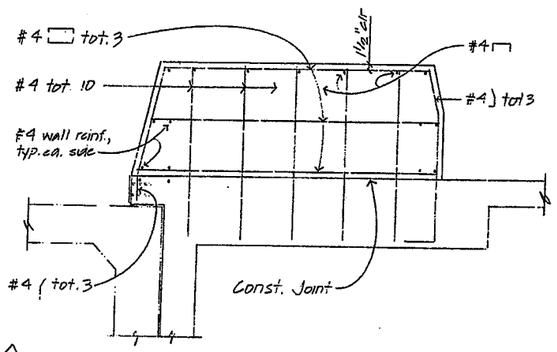

5 SECTION 3/4" = 1'-0"

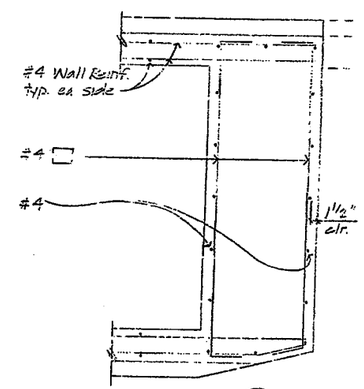

6 SECTION 3/4" = 1'-0"

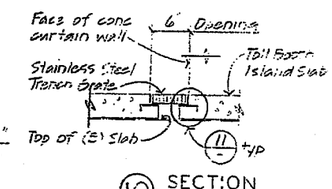

10 SECTION 1½" = 1'-0"

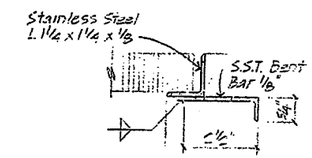

11 TRENCH GRATE FRAME 1/2" = 1"

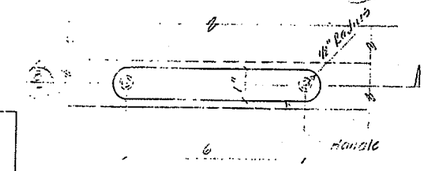

7 PLAN - HANDLE 1/2" = 1"

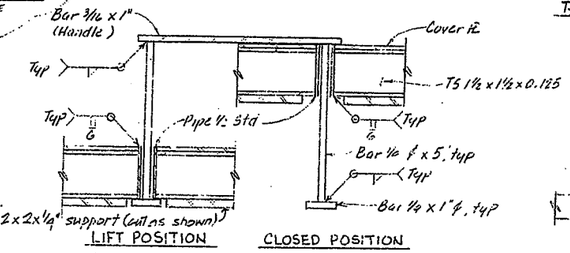

8 SECTION 1/2" = 1'

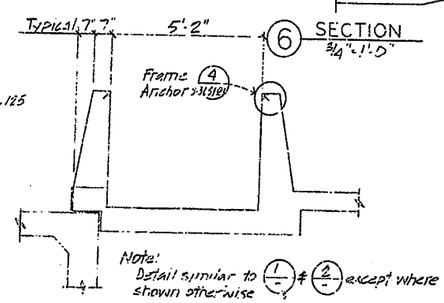

12 SECTION 1/2" = 1'-0"

NOTE:
All metalwork embedded in concrete, except for stainless steel, shall be hot-dip galvanized after fabrication.

1	Revise TB.2 Per C.O.O. #24

CONTRACT CHANGE ORDER NO. 1
SHEET 26 OF 45

SUPPLEMENTAL SHEET

AS BUILT PLANS
Contract No. 04-036804
Date Completed 5-14-91
Document No.

DESIGN	By A. Guyau 3/86	Checked EPC 3-86	John Boda 6/86
DETAILS	By GF Bidwell 2-86	Checked EPC 3-86	John Boda 6/86
QUANTITIES	By	Checked	

State of CALIFORNIA DEPARTMENT OF TRANSPORTATION

DIVISION OF STRUCTURES
STRUCTURE DESIGN
PROJECT ENGINEER [illegible] REGISTERED CIVIL ENGINEER NO. C32049

BRIDGE NO. 33M57B5
POST MILE 2.0-2.1

SFOBB TOLL PLAZA MODIFICATIONS
TOLL BOOTH BASE DETAILS 2S

SHEET S-37 SR2

ORIGINAL SCALE IN INCHES FOR REDUCED PLANS 0 1 2 3

CU 04207
WO 03690

Discard prints bearing earlier revision dates

REVISION DATES (PRELIMINARY ESTIMATE ONLY)

SHEET OF

I HEREBY CERTIFY THAT THIS IS A TRUE AND ACCURATE COPY OF THE ABOVE DOCUMENT TAKEN UNDER MY DIRECTION AND CONTROL ON THIS DATE IN SACRAMENTO, CALIFORNIA PURSUANT TO AUTHORIZATION BY THE DIRECTOR OF TRANSPORTATION

DATE 11/15/91 SIGNATURE [illegible] TITLE SUPERVISOR OF MICROFILM SERVICES

29X

DIST.	COUNTY	ROUTE	POST MILES TOTAL PROJECT	SHEET NO.	TOTAL SHEETS
04	Ala	80	2.0 2.1	104 B	181

REGISTERED ENGINEER - CIVIL

PLANS APPROVAL DATE

REGISTERED PROFESSIONAL ENGINEER R.R. Bridwell No. C 17962 Exp. 6/30/89 CIVIL STATE OF CALIFORNIA

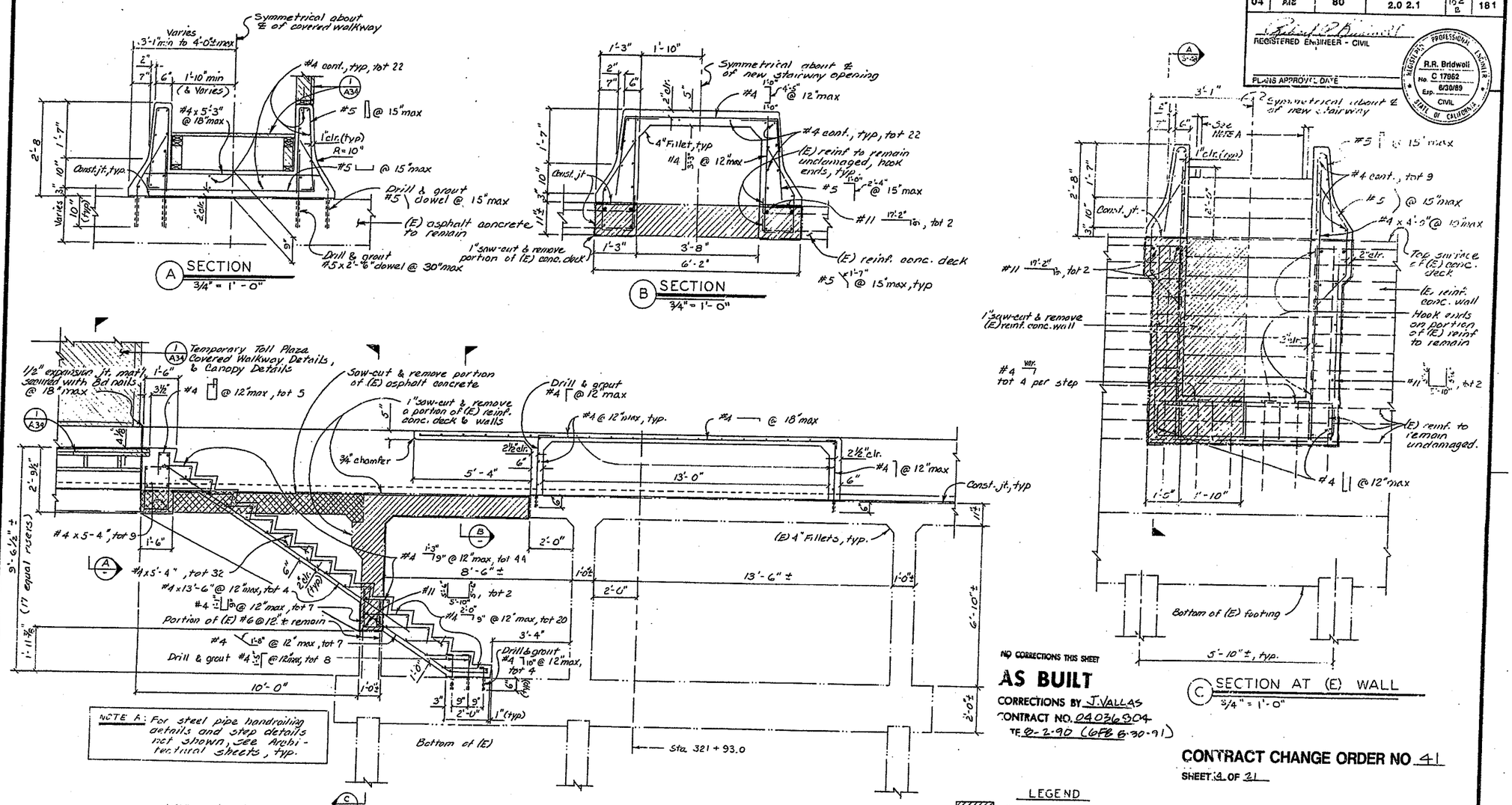

NO CORRECTIONS THIS SHEET

AS BUILT

CORRECTIONS BY J. VALLAS

CONTRACT NO. 04036804

TE 8-2-90 (6FB 8-30-91)

CONTRACT CHANGE ORDER NO 41

SHEET 4 OF 21

LEGEND

- Indicates limits of (E) reinforced concrete to be removed.
- Indicates elevated plywood walkway deck and walkway cover to be reconstructed.
- Indicates limits of (E) asphalt concrete to be removed.

NOTE:
THE CONTRACTOR SHALL VERIFY ALL CONTROLLING FIELD DIMENSIONS BEFORE ORDERING OR FABRICATING ANY MATERIAL.

ADDITIONAL SHEET

AS BUILT PLANS
Contract No. 04-036804
Date Completed 5-14-91
Document No.

DESIGN	By Joel E. Escalar 12/88	Checked [signature] 12/88	
DETAILS	By Joel E. Escalar 12/88	Checked [signature] 12/88	
QUANTITIES	By	Checked	

State of CALIFORNIA DEPARTMENT OF TRANSPORTATION

DIVISION OF STRUCTURES STRUCTURE DESIGN

Joel E. Escalar 34606 PROJECT ENGINEER REGISTERED CIVIL ENGINEER NO.

BRIDGE NO. 33M5785 POST MILE 2.0

SFOBB TOLL PLAZA MODIFICATIONS

NEW STAIRWAY NO. 7 DETAILS 2

SHEET S-47

ORIGINAL SCALE IN INCHES FOR REDUCED PLANS 0 1 2 3

CU 04207
EA 036804

Disregard prints bearing earlier revision dates

REVISION DATES (PRELIMINARY STAGE ONLY) 12/4/88

SHEET OF

05 050 2139 A (5/86)

29X

I HEREBY CERTIFY THAT THIS IS A TRUE AND ACCURATE COPY OF THE ABOVE DOCUMENT TAKEN UNDER MY DIRECTION AND CONTROL ON THIS DATE IN SACRAMENTO, CALIFORNIA PURSUANT TO AUTHORIZATION BY THE DIRECTOR OF TRANSPORTATION

DATE 11/05/91 SIGNATURE Deborah Robinson TITLE SUPERVISOR OF MICROFILM SERVICES

DAS-53 78

DIST	COUNTY	ROUTE	POST MILES TOTAL PROJECT	SHEET NO	TOTAL SHEETS
04	Ala	80	2.0-2.1	04 C	181

REGISTERED ENGINEER - CIVIL

PLANS APPROVAL DATE

REGISTERED PROFESSIONAL ENGINEER R.R. Bridwell No C 17962 Exp. 6/30/89 CIVIL STATE OF CALIFORNIA

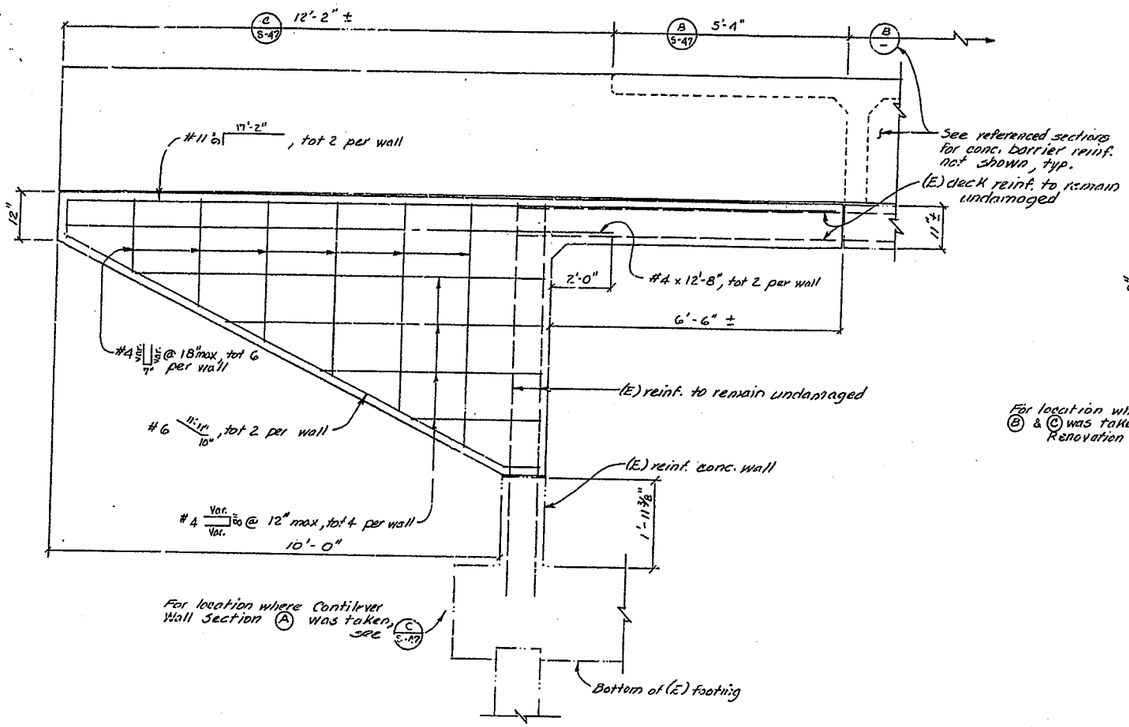

(A) CANTILEVER WALL SECTION
3/4" = 1'-0"

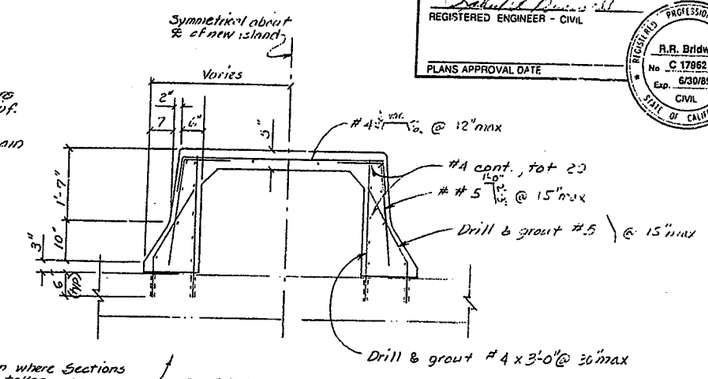

(B) SECTION
3/4" = 1'-0"

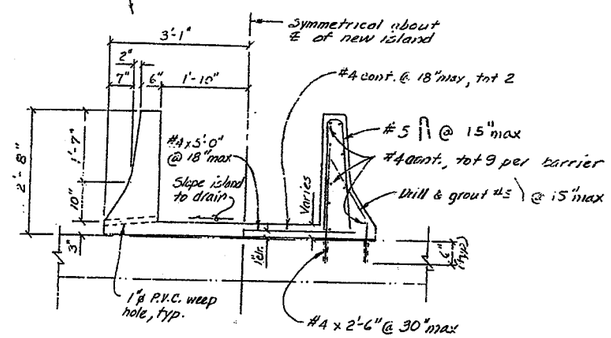

(C) SECTION
3/4" = 1'-0"

NO CORRECTIONS THIS SHEET

AS BUILT

CORRECTIONS BY J. Vallas
CONTRACT NO. 04036804
TE 8-2-90 (6FB 8-30-91)

AS BUILT PLANS
Contract No. 04-036804
Date Completed 5-14-91
Document No. _____

CONTRACT CHANGE ORDER NO 41
SHEET 15 OF 21

NOTE:
THE CONTRACTOR SHALL VERIFY ALL CONTROLLING FIELD DIMENSIONS BEFORE ORDERING OR FABRICATING ANY MATERIAL.

ADDITIONAL SHEET

DESIGN	By Joel E. Escobar 12/88	Checked Anthony Guyer 12/88	
DETAILS	By Joel E. Escobar 12/88	Checked Anthony Guyer 12/88	
QUANTITIES	By	Checked	

State of CALIFORNIA
DEPARTMENT OF TRANSPORTATION

DIVISION OF STRUCTURES
STRUCTURE DESIGN
Joel E. Escobar 34606
PROJECT ENGINEER REGISTERED CIVIL ENGINEER NO.

BRIDGE NO. 33M5785
POST MILE 2.0

SFOBB TOLL PLAZA MODIFICATIONS
NEW STAIRWAY NO. 7 DETAILS 3

SHEET S-48

ORIGINAL SCALE IN INCHES FOR REDUCED PLANS 0 1 2 3

CU 04207
EA 036804

Disregard prints bearing earlier revision dates

REVISION DATES (PRELIMINARY STAGE ONLY) 12/8/88

SHEET OF

05 050 2159A (5/86)

29X

I HEREBY CERTIFY THAT THIS IS A TRUE AND ACCURATE COPY OF THE ABOVE DOCUMENT TAKEN UNDER MY DIRECTION AND CONTROL ON THIS DATE IN SACRAMENTO, CALIFORNIA PURSUANT TO AUTHORIZATION BY THE DIRECTOR OF TRANSPORTATION.

DATE 11/05/91 SIGNATURE Deborah Robinson TITLE SUPERVISOR OF MICROFILM SERVICES

DIST.	COUNTY	ROUTE	POST MILES TOTAL PROJECT	SHEET NO.	TOTAL SHEETS
04	Ala	80	2.0-2.1	181	

REGISTERED ENGINEER - CIVIL

PLANS APPROVAL DATE

R.R. Bridwell No. C 17562 Exp. 6/30/89 CIVIL

AS BUILT PLANS
Contract No. 04-036804
Date Completed 5-14-91
Document No. _____

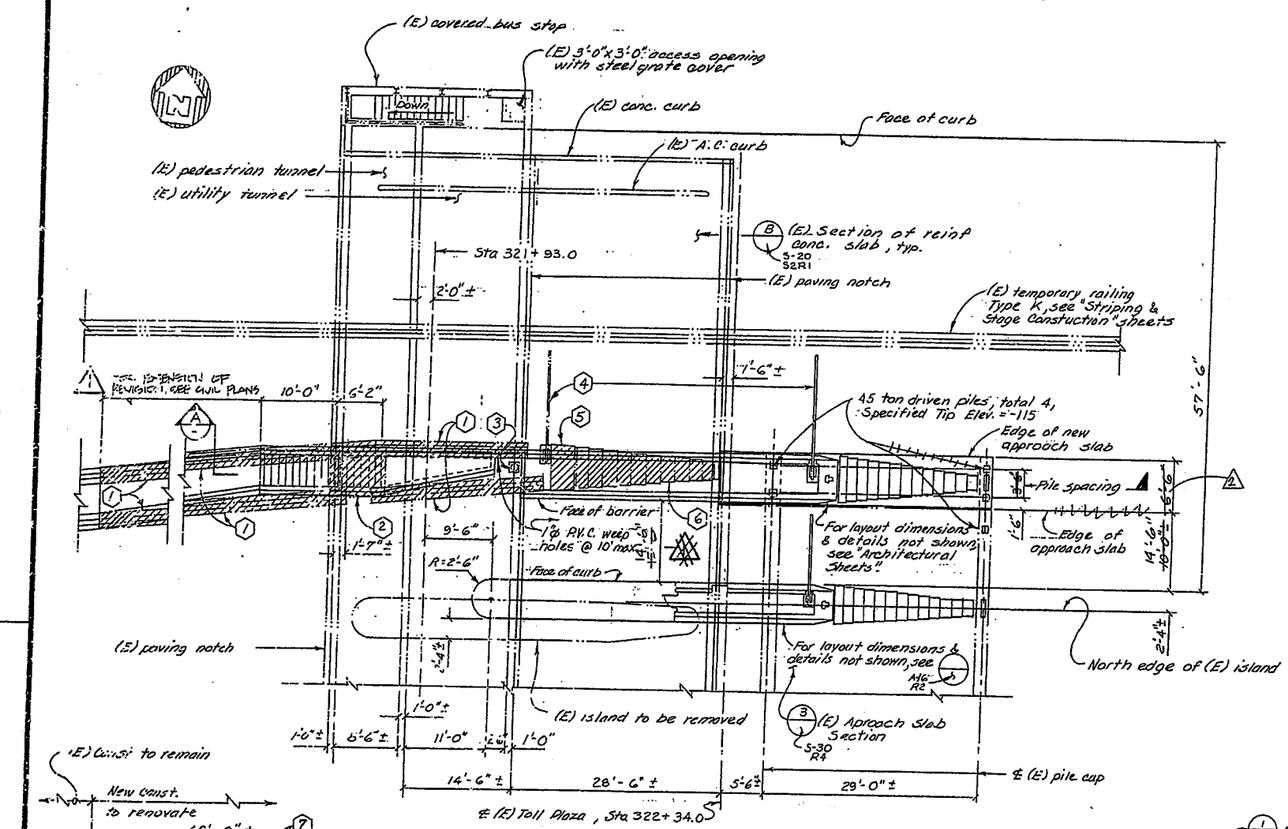

PARTIAL TOLL PLAZA PLAN
1/8" = 1' - 0"

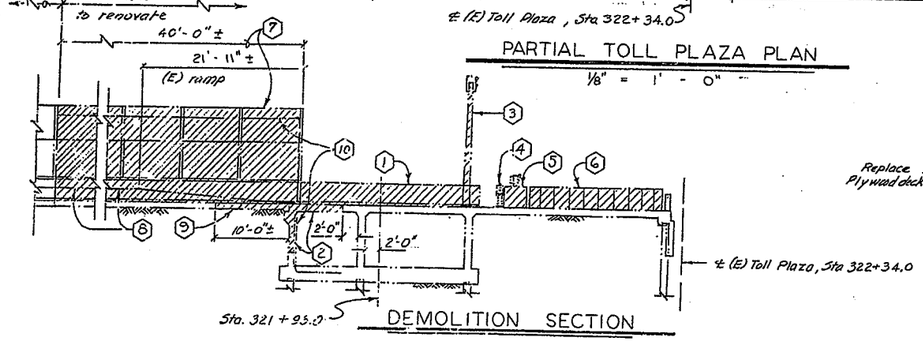

DEMOLITION SECTION

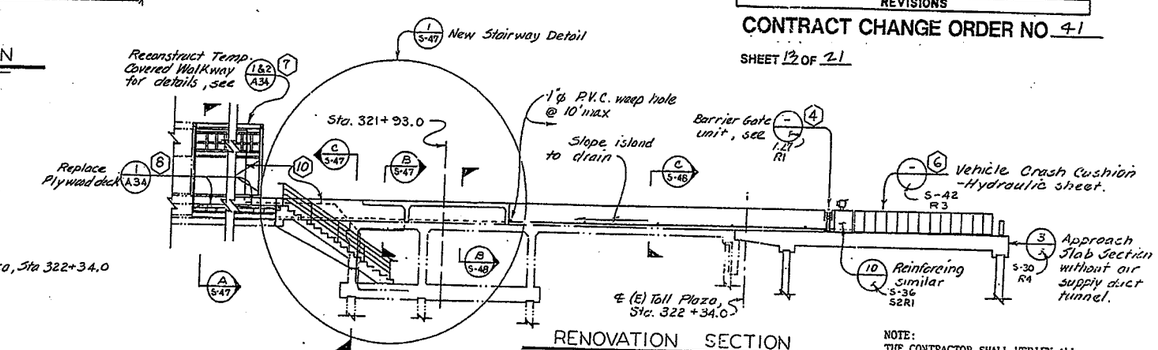

RENOVATION SECTION

A ELEVATION SECTIONS
1/8" = 1' - 0"

GENERAL NOTES

1. Remove (E) temporary concrete barrier Type 50.
2. Remove a portion of the (E) pedestrian tunnel concrete exterior wall and concrete deck. Retain existing reinforcement to remain undamaged, cut and bend as shown in the details on sheets "S-47" & "S-48".
3. Remove and salvage the (E) traffic signal.
4. Remove and relocate the (E) barrier gate unit.
5. Remove (E) reinforced concrete barrier.
6. Remove and relocate the (E) vehicle crash cushion - hydraulic.
7. Remove and reconstruct a portion of the (E) temporary covered walkway, see "Architectural" sheets.
8. Remove and reconstruct a portion of (E) wood ramp.
9. Remove a portion of (E) asphalt concrete pavement to construct the new reinforced concrete stairway.
10. Remove and relocate portion of (E) electrical lighting conduits for reconstruction of temporary covered walkway. Cast portion of electrical lighting conduits in the stairway wall and concrete barrier, see Electrical sheets.
11. For "Design Notes" see structural sheet "S-3/R2".
12. Indicates (E) Construction.
13. Indicates limits of removal for (E) items.

NO CORRECTIONS THIS SHEET
AS BUILT
CORRECTIONS BY J. Vallas
CONTRACT NO. 04036804
TE 7-16-90 (6FB 8-30-91)

MARK	DATE	DESCRIPTION	BY	CH'D
2	2/14/89	SEE S-49 FOR REVISIONS	DUF	
1	2/3/89	DIMENSION REVISION	CAN	DRC

REVISIONS

CONTRACT CHANGE ORDER NO. 41
SHEET 12 OF 21

NOTE:
THE CONTRACTOR SHALL VERIFY ALL CONTROLLING FIELD DIMENSIONS BEFORE ORDERING OR FABRICATING ANY MATERIAL.

ADDITIONAL SHEET

DESIGN	By Joel E. Lenahan 11/88	Checked Anthony Dupin 11/88	
DETAILS	By Joel E. Lenahan 11/88	Checked Anthony Dupin 11/88	
QUANTITIES	By	Checked	

State of CALIFORNIA
DEPARTMENT OF TRANSPORTATION

DIVISION OF STRUCTURES
STRUCTURE DESIGN
Joel E. Lenahan 34606
PROJECT ENGINEER REGISTERED CIVIL ENGINEER NO.

BRIDGE NO. 33M5785
POST MILE 2.0

SFOBB TOLL PLAZA MODIFICATIONS
NEW STAIRWAY NO. 7 DETAILS 1

SHEET S-46 R1

CU 04207
EA 036804

ORIGINAL SCALE IN INCHES FOR REDUCED PLANS 0 1 2 3

Disregard prints bearing earlier revision dates

REVISION DATES (PRELIMINARY STAGE ONLY)

SHEET ___ OF ___

DS 050 S 39A (5/66)

29X

I HEREBY CERTIFY THAT THIS IS A TRUE AND ACCURATE COPY OF THE ABOVE DOCUMENT TAKEN UNDER MY DIRECTION AND CONTROL ON THIS DATE IN SACRAMENTO, CALIFORNIA PURSUANT TO AUTHORIZATION BY THE INSPECTOR OF TRANSPORTATION.

DATE 11/15/91 SIGNATURE Richard Robinson TITLE SUPERVISOR OF MICROFILM SERVICES