DIST	COUNTY	ROUTE	POST MILES TOTAL PROJECT	SHEET NO.	TOTAL SHEETS
04	Ala	80	2.0	26	68

REGISTERED ENGINEER - CIVIL

1-25-88
PLANS APPROVAL DATE

REGISTERED PROFESSIONAL ENGINEER
C L PEARSON
No. C13175
Exp. 3/31/89
CIVIL
STATE OF CALIFORNIA

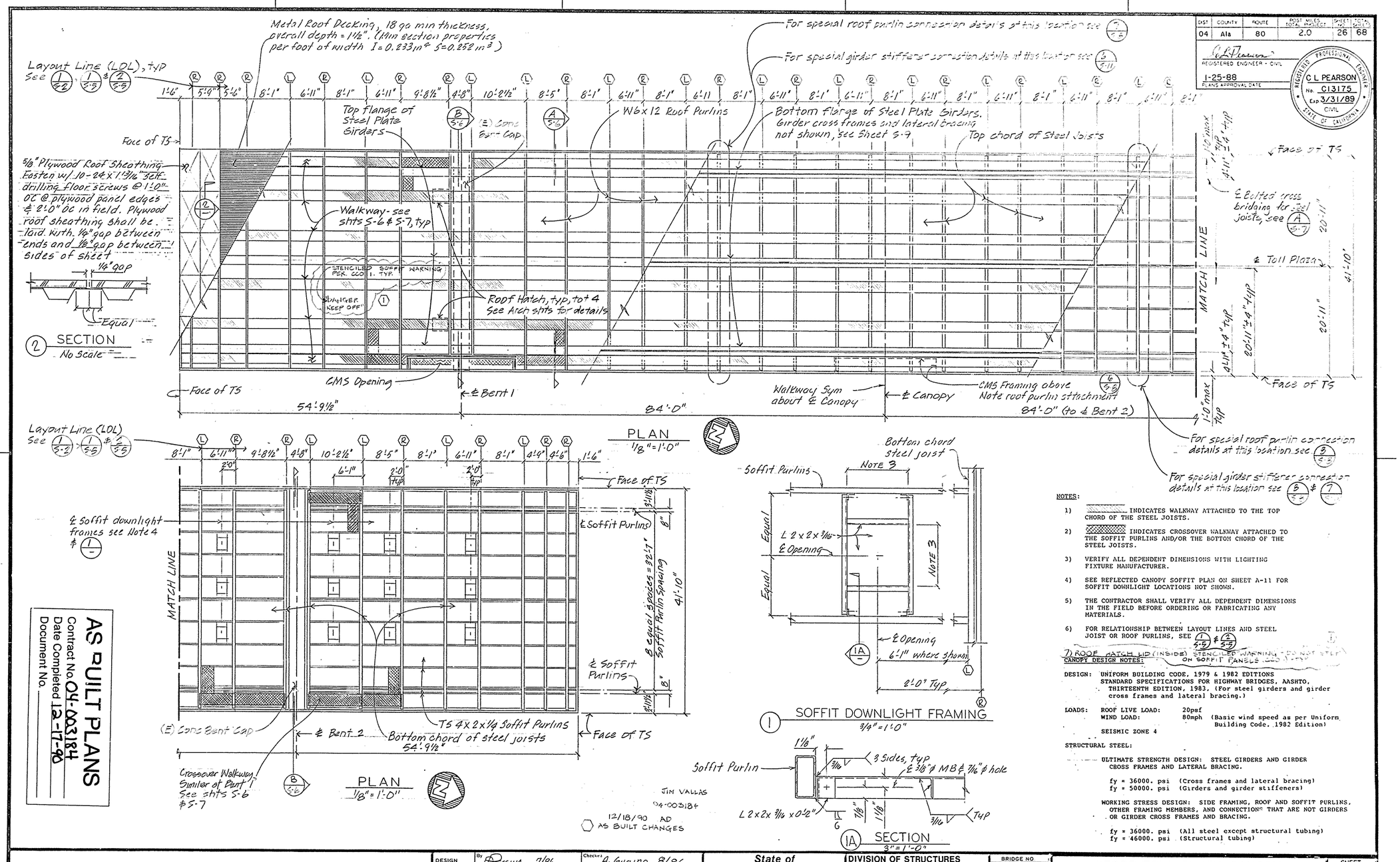

NOTES:

1) _____ INDICATES WALKWAY ATTACHED TO THE TOP CHORD OF THE STEEL JOISTS.

2) ▨▨▨▨ INDICATES CROSSOVER WALKWAY ATTACHED TO THE SOFFIT PURLINS AND/OR THE BOTTOM CHORD OF THE STEEL JOISTS.

3) VERIFY ALL DEPENDENT DIMENSIONS WITH LIGHTING FIXTURE MANUFACTURER.

4) SEE REFLECTED CANOPY SOFFIT PLAN ON SHEET A-11 FOR SOFFIT DOWNLIGHT LOCATIONS NOT SHOWN.

5) THE CONTRACTOR SHALL VERIFY ALL DEPENDENT DIMENSIONS IN THE FIELD BEFORE ORDERING OR FABRICATING ANY MATERIALS.

6) FOR RELATIONSHIP BETWEEN LAYOUT LINES AND STEEL JOIST OR ROOF PURLINS, SEE 1/S-2 & 2/S-5

7) ROOF HATCH LID (INSIDE) STENCILED WARNING "DO NOT STEP ON SOFFIT PANELS" (GO 11-TYP)

CANOPY DESIGN NOTES:

DESIGN: UNIFORM BUILDING CODE, 1979 & 1982 EDITIONS
STANDARD SPECIFICATIONS FOR HIGHWAY BRIDGES, AASHTO, THIRTEENTH EDITION, 1983. (For steel girders and girder cross frames and lateral bracing.)

LOADS: ROOF LIVE LOAD: 20psf
WIND LOAD: 80mph (Basic wind speed as per Uniform Building Code, 1982 Edition)
SEISMIC ZONE 4

STRUCTURAL STEEL:

ULTIMATE STRENGTH DESIGN: STEEL GIRDERS AND GIRDER CROSS FRAMES AND LATERAL BRACING.

fy = 36000. psi (Cross frames and lateral bracing)
fy = 50000. psi (Girders and girder stiffeners)

WORKING STRESS DESIGN: SIDE FRAMING, ROOF AND SOFFIT PURLINS, OTHER FRAMING MEMBERS, AND CONNECTIONS THAT ARE NOT GIRDERS OR GIRDER CROSS FRAMES AND BRACING.

fy = 36000. psi (All steel except structural tubing)
fy = 46000. psi (Structural tubing)

AS BUILT PLANS
Contract No. 04-003184
Date Completed 12-17-90
Document No.

26

	By		Checked	
DESIGN	DECCHIA	7/86	A. Gugino	8/86
DETAILS	EF Bidwell	7-86	A. Gugino	8/86
QUANTITIES				

State of CALIFORNIA
DEPARTMENT OF TRANSPORTATION

DIVISION OF STRUCTURES
STRUCTURE DESIGN
DECCHIA — PROJECT ENGINEER
C32049 — REGISTERED CIVIL ENGINEER NO.

BRIDGE NO. 33M5785
POST MILE 2.0-2.1

SFOBB TOLL PLAZA CANOPY
CANOPY FRAMING PLAN

SHEET S-1

DS OSD 2139 A (5/86)

ORIGINAL SCALE IN INCHES FOR REDUCED PLANS 0 1 2 3

CU 04334
EA 003181

Disregard prints bearing earlier revision dates

REVISION DATES (PRELIMINARY STAGE ONLY)
1/15/87

SHEET 1 OF 18

29X

I HEREBY CERTIFY THAT THIS IS A TRUE AND ACCURATE COPY OF THE ABOVE DOCUMENT TAKEN UNDER MY DIRECTION AND CONTROL ON THIS DATE IN SACRAMENTO, CALIFORNIA PURSUANT TO AUTHORIZATION BY THE DIRECTOR OF TRANSPORTATION.

DATE 6/26/91 SIGNATURE Donald Blackfield TITLE SUPERVISOR OF MICROFILM SERVICES

DAS-3306

DIST	COUNTY	ROUTE	POST MILES TOTAL PROJECT	SHEET NO	TOTAL SHEETS
04	Ala	80	2.0	27	68

REGISTERED ENGINEER - CIVIL

1-25-88
PLANS APPROVAL DATE

REGISTERED PROFESSIONAL ENGINEER
C L PEARSON
No. C13175
Exp. 3/31/89
CIVIL
STATE OF CALIFORNIA

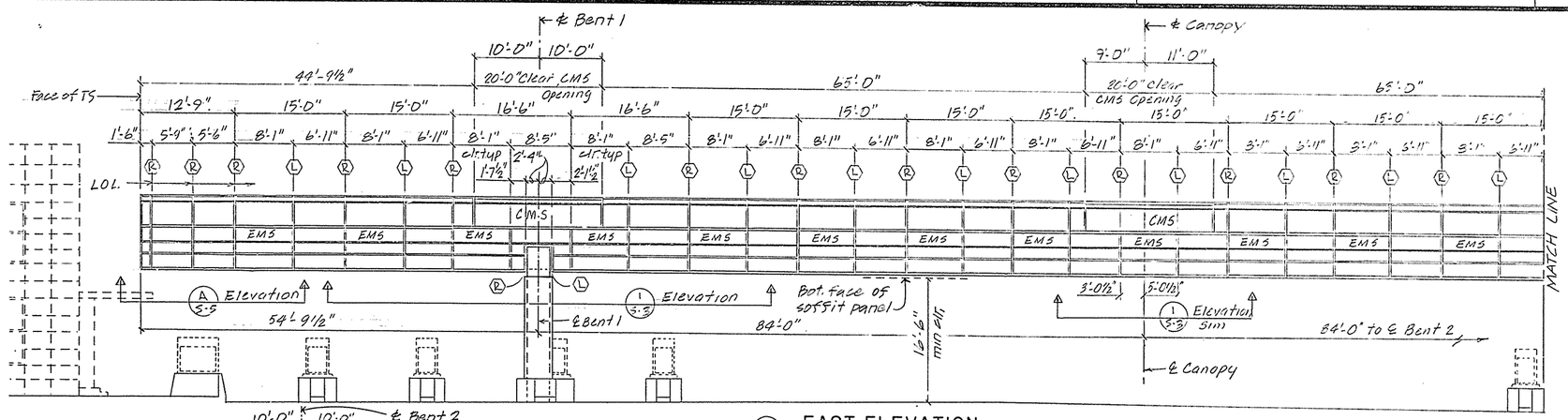

A EAST ELEVATION
1/8" = 1'-0"

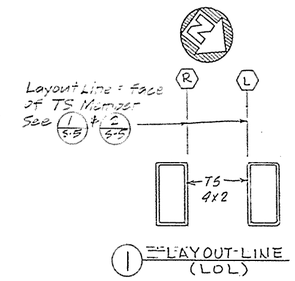

1 LAYOUT-LINE (LOL)

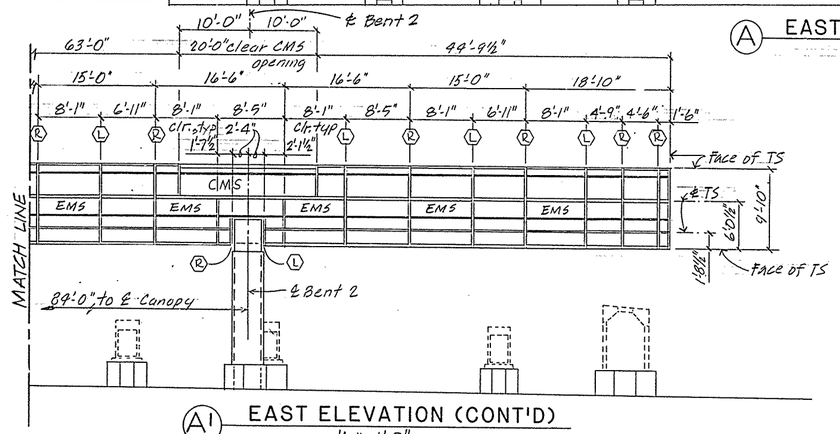

A' EAST ELEVATION (CONT'D)
1/8" = 1'-0"

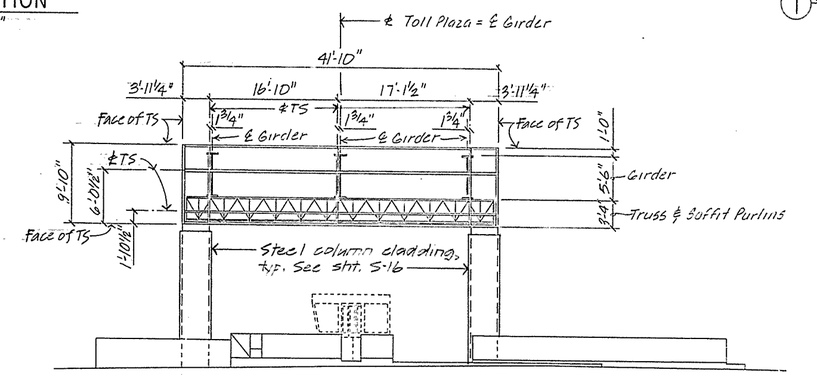

C NORTH ELEVATION (South Elevation similar)
1/8" = 1'-0"

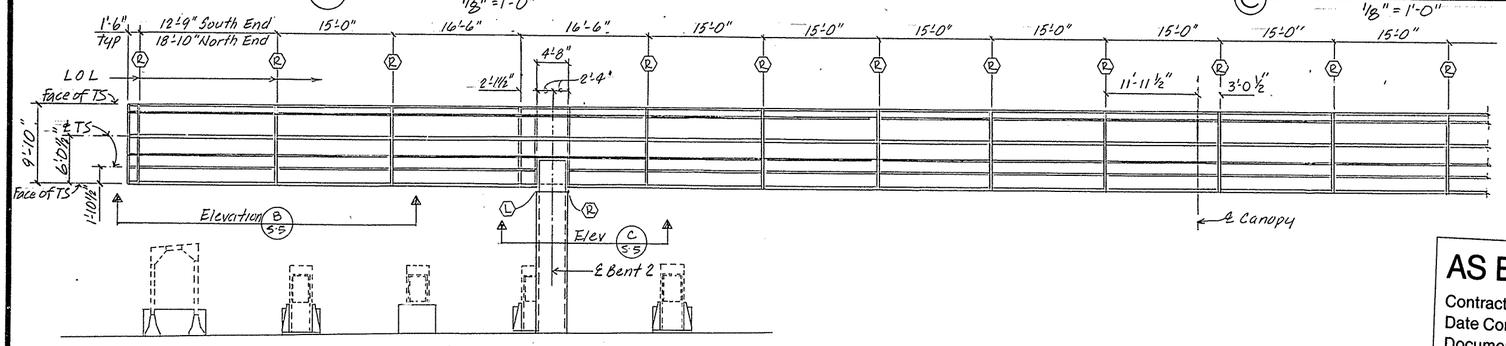

B PARTIAL WEST ELEVATION
1/8" = 1'-0"

AS BUILT PLANS
Contract No. 04-003184
Date Completed 12-17-90
Document No.

JIM VALLA
04-003 84
12/18/90 AD
NO AS BUILT CHANGES

NOTE:
THE CONTRACTOR SHALL VERIFY ALL DEPENDENT DIMENSIONS IN THE FIELD BEFORE ORDERING OR FABRICATING ANY MATERIAL.

27

DESIGN	By DECCHIA 7/86	Checked A.M. GUGINO 8/86	
DETAILS	By SF Bidwell 7-86	Checked A.M GUGINO 8/86	
QUANTITIES	By	Checked	

State of CALIFORNIA
DEPARTMENT OF TRANSPORTATION

DIVISION OF STRUCTURES
STRUCTURE DESIGN
DECCHIA — PROJECT ENGINEER
C32049 — REGISTERED CIVIL ENGINEER NO

BRIDGE NO. 33M5785
POST MILE 2.0-2.1

SFOBB TOLL PLAZA CANOPY
CANOPY FRAMING ELEVATIONS

SHEET S-2

DS 050 2139 A (5/86)

ORIGINAL SCALE IN INCHES FOR REDUCED PLANS 0 1 2 3

CU 04334
EA 003181

Disregard prints bearing earlier revision dates

REVISION DATES (PRELIMINARY STAGE ONLY)

SHEET 2 OF 18

29X

I HEREBY CERTIFY THAT THIS IS A TRUE AND ACCURATE COPY OF THE ABOVE DOCUMENT TAKEN UNDER MY DIRECTION AND CONTROL ON THIS DATE IN SACRAMENTO, CALIFORNIA PURSUANT TO AUTHORIZATION BY THE DIRECTOR OF TRANSPORTATION.

DATE 6/26/91 SIGNATURE Donald Bluehfield TITLE SUPERVISOR OF MICROFILM SERVICES

DAS 5049

DIST	COUNTY	ROUTE	POST MILES TOTAL PROJECT	SHEET NO.	TOTAL SHEETS
04	Ala	80	2.0	28	68

REGISTERED ENGINEER - CIVIL

1-25-88
PLANS APPROVAL DATE

REGISTERED PROFESSIONAL ENGINEER C L PEARSON No. C13175 Exp. 3/31/89 CIVIL STATE OF CALIFORNIA

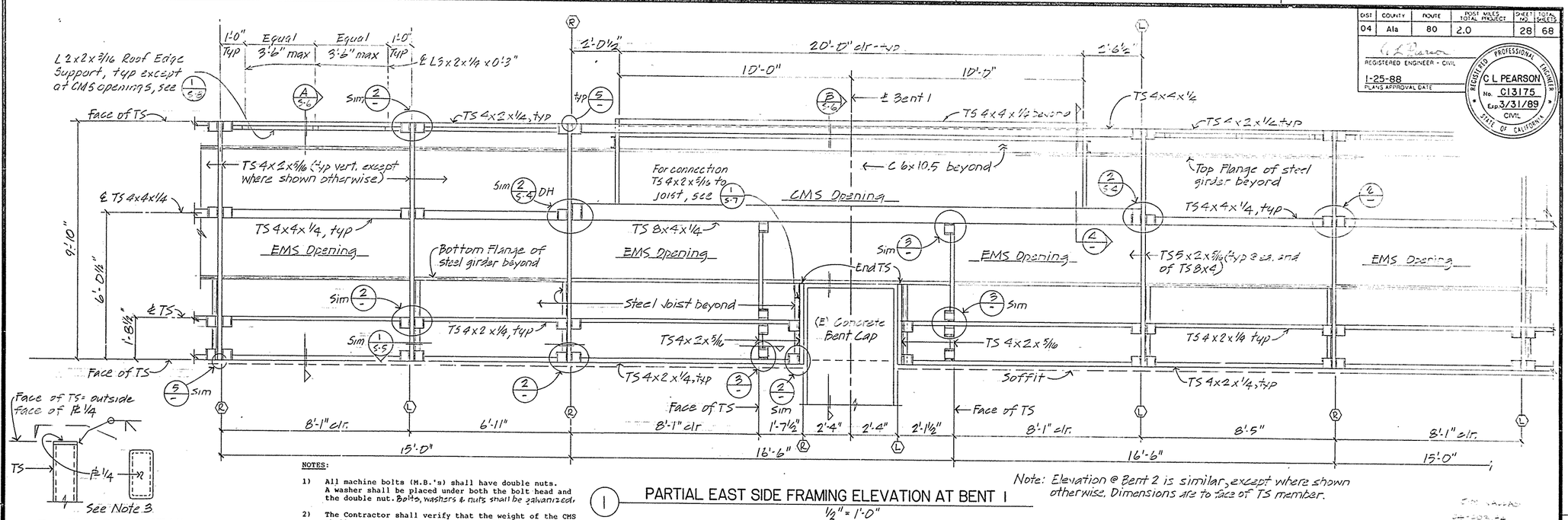

1 PARTIAL EAST SIDE FRAMING ELEVATION AT BENT 1
1/2" = 1'-0"

Note: Elevation @ Bent 2 is similar, except where shown otherwise. Dimensions are to face of TS member.

NOTES:

1) All machine bolts (M.B.'s) shall have double nuts. A washer shall be placed under both the bolt head and the double nut. Bolts, washers & nuts shall be galvanized.

2) The Contractor shall verify that the weight of the CMS shall not exceed 750 lbs, and that the weight of the EMS shall not exceed 400 lbs; when installed in the canopy.

3) All TS members with open ends shall be capped, and welds shall be ground at the outside face. See 5/-

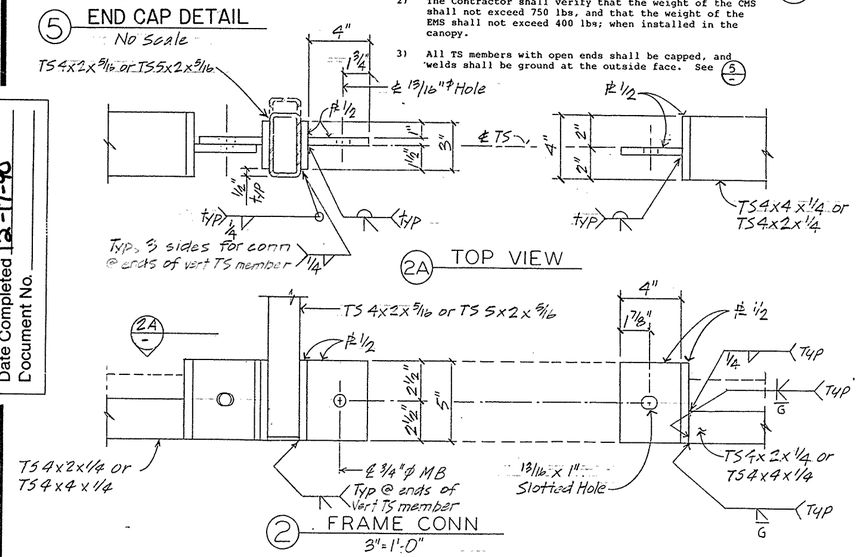

5 END CAP DETAIL
No Scale

2A TOP VIEW

2 FRAME CONN
3" = 1'-0"

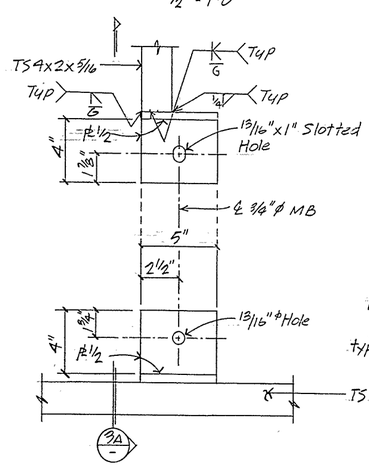

3 FRAME CONN
3" = 1'-0"

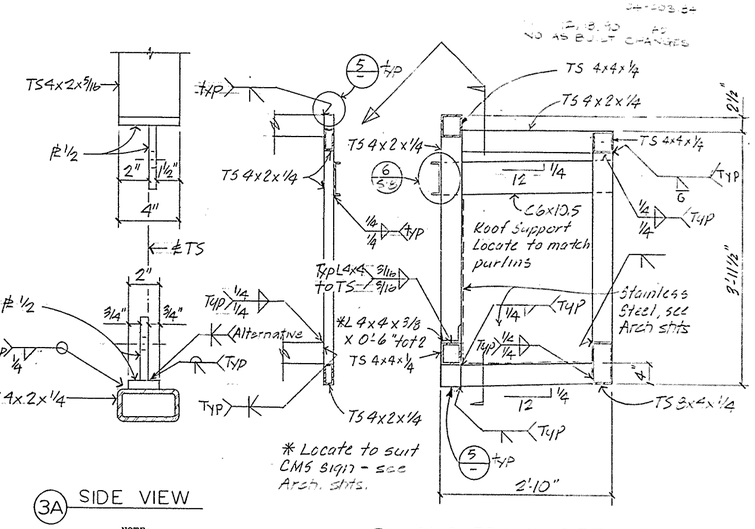

3A SIDE VIEW

4 CMS FRAME DETAILS
1" = 1'-0"

NOTE:

THE CONTRACTOR SHALL VERIFY ALL DEPENDENT DIMENSIONS IN THE FIELD BEFORE ORDERING OR FABRICATING ANY MATERIAL.

AS BUILT PLANS
Contract No. 04-003184
Date Completed 12-17-90
Document No.

28

	By	Checked
DESIGN	A. N. Gugino 8/86	DECCHIA 8/86
DETAILS	GF Bidwell 7-86	DECCHIA 8/86
QUANTITIES		

State of CALIFORNIA DEPARTMENT OF TRANSPORTATION

DIVISION OF STRUCTURES
STRUCTURE DESIGN
DECCHIA C32049
PROJECT ENGINEER REGISTERED CIVIL ENGINEER NO.

BRIDGE NO. 33M5785
POST MILE 20.2.1

SFOBB TOLL PLAZA CANOPY
CANOPY FRAMING DETAILS

SHEET S-3

DS OSD 2139A (5/86)

ORIGINAL SCALE IN INCHES FOR REDUCED PLANS 0 1 2 3

CU 04334
EA 003181

Disregard prints bearing earlier revision dates

REVISION DATES (PRELIMINARY STAGE ONLY)

SHEET 3 OF 15

29X

I HEREBY CERTIFY THAT THIS IS A TRUE AND ACCURATE COPY OF THE ABOVE DOCUMENT TAKEN UNDER MY DIRECTION AND CONTROL ON THIS DATE IN SACRAMENTO, CALIFORNIA PURSUANT TO AUTHORIZATION BY THE DIRECTOR OF TRANSPORTATION.

DATE 6/26/91 SIGNATURE Donald Blackford TITLE SUPERVISOR OF MICROFILM SERVICES

DAS-5568