DIST	COUNTY	ROUTE	POST MILE TOTAL PROJECT	SHEET NO.	TOTAL SHEETS
04	Ala	80	2.0	1	68

STATE OF CALIFORNIA

DEPARTMENT OF TRANSPORTATION

PROJECT PLANS FOR CONSTRUCTION ON STATE HIGHWAY

IN ALAMEDA COUNTY

IN OAKLAND AT THE

SAN FRANCISCO–OAKLAND BAY BRIDGE

TOLL PLAZA

Caltrans

LOCATION MAP

REDUCED PLAN
USE SCALE BELOW
0 1 2 3
3 INCHES ON ORIGINAL PLAN

INDEX OF SHEETS

SHEET NO.

ARCHITECTURAL

1	A0	Title and Location Map
2	A1	Architectural Abbreviations, Symbols and General Notes
3	A2	Partial Existing Condition Plaza Plan
4	A3	Partial Existing Condition Plaza Plan, Color and Coating Schedule
5	A4	East Elevation, West Elevation
6	A5	North Elevation, South Elevation, Partial Elevation
7	A6	Longitudinal Plaza Section
8	A7	Plaza Section
9	A8	Plaza Section
10	A9	Canopy Section
11	A10	Canopy Section
12	A11	Reflected Canopy Soffit Plan, Roof Camera Mount
13	A12	Roof Plan, Roof Details
14	A13	Details
15	A14	Details
16	A15	Roof Hatch, Ladder, Traffic Light Mounting
17	A16	Changeable Message Sign Modification

CIVIL

18	L1	Layout and Traffic Control Plans
19	L2	Layout and Traffic Control Plans
20	C1	Construction Details
21-24		Revised Standard Plans
25		New Standard Plans

STRUCTURAL

26	S1	Canopy Framing Plan
27	S2	Canopy Framing Elevations
28	S3	Canopy Framing Details
29	S4	Canopy Typical Section and Details
30	S5	Canopy Framing Details at Corners
31	S6	Canopy Typical Sections
32	S7	Steel Joist Details
33	S8	Roof Purlin Conn Details
34	S9	Girder Plan and Details
35	S10	Girder Cross-Frame Bracing Details
36	S11	Girder Details No.1
37	S12	Girder Details No. 2
38	S13	Steel Girder Details
39	S14	Girder Splice Welding Details
40	S15	Canopy Erection Details
41	S16	Column Cladding Details
42	S17	Canopy Bent Details (For Information Only)
43	S18	Canopy Bent Details 2 (For Information Only)

MECHANICAL

44	M1	Canopy Drain Plan
45	M2	Typical Section at Bents

ELECTRICAL

46	E1	Index, General Notes, and Abbreviations
47	E2	Project Notes, Legend, and Symbols
48	E3	Overhead Traffic Lights and Extinguishable Message Sign (EMS) Conduit and Conductor Block Diagram
49	E4	Overhead Traffic Lights and Extinguishable Message Sign Conduit Layout in Canopy-East Elevation
50	E5	Special CMS and EMS Mounting Details
51	E6	Overhead Traffic Light and EMS Schematic Diagrams
52	E7	Overhead Traffic Light and Special CMS for Lane 1
53	E8	Extinguishable Message Sign Schematic Diagram
54	E9	Canopy Lighting Individual Lane Uplights and Downlights Control Schematic and Conduit Layout
55	E10	Canopy Down Lighting EMS and CMS Details
56	E11	High Mast Lighting, CMS, Overhead Traffic Lights and Extinguishable Message Sign Details
57	E12	CCTV System One Line Layout and Block Diagrams
58	E13	CCTV System Power Supply and Trac Details
59	E14	CCTV System Canopy Details
60	E15	CCTV System Toll Booths, Canopy, and Administration Building
61	E16	CCTV System Monitor Console Station and CCTV Cabinet
62	E17	CCTV System Miscellaneous Details
63	E18	CCTV System Administration Building Details
64	E19	CCTV System-Canopy Roof Details
65	E20	CCTV System-Dispatchers Office Camera Locations and Overall Conduit Layout
66	E21	CCTV System - Dispatchers Office Power Panel, Block Diagram, and One Line Diagram
67	E22	CCTV System - Dispatchers Office Maintenance Building
68	E23	CCTV System - Dispatchers Office Miscellaneous Details

APPLICABLE STANDARD PLANS

A74-A	A-81	ES-6A
A75-A	F-10	ES-6S
A75-B	T-10	ES-6T
A77C-1	ES-1A	ES-6V
A77C-2	ES-1B	ES-8
A77-E	ES-3A	ES-10
A79-A	ES-3D	ES-13
A79-B	ES-4C	ES-27A
A79-C	ES-5F	ES-27B

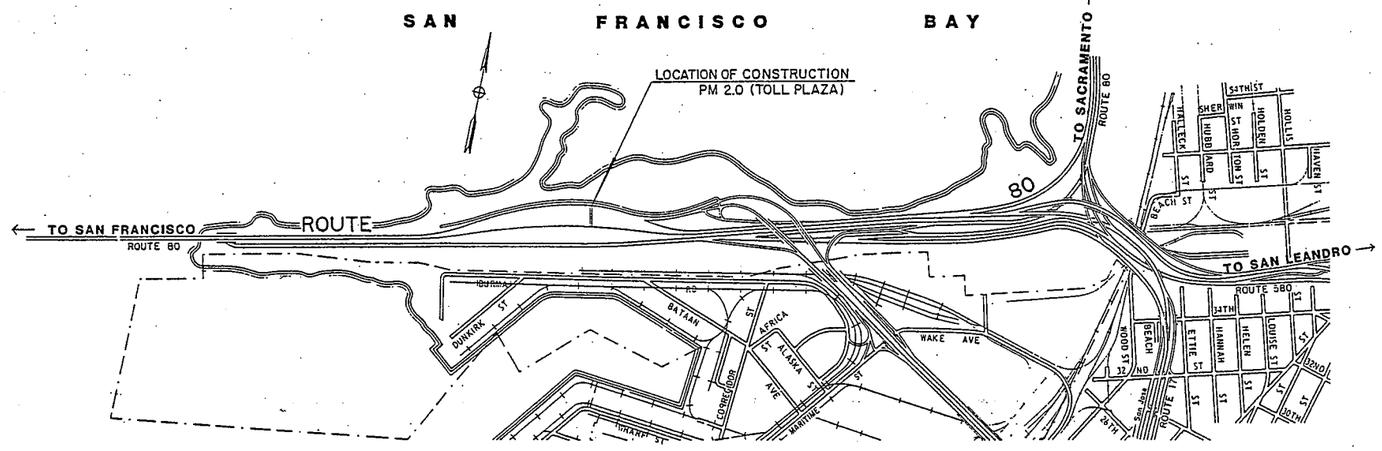

NO SCALE

VICINITY MAP

THE BUILDING WORK ON THIS PROJECT HAS BEEN DESIGNED TO CONFORM WITH THE REQUIREMENTS OF THE STATE BUILDING STANDARDS CODE OF TITLE 24, CALIFORNIA ADMINISTRATIVE CODE.

The Contractor shall possess the Class (or Classes) of license as specified in the "Notice to Contractors" on page 1 of the Special Provisions.

SCHEMATIC AND CONCEPTUAL DESIGN BY
SKIDMORE, OWINGS, & MERRILL

CHIEF, DIVISION OF STRUCTURE
Registered Civil Engineer

January 25, 1988
Plans Approval Date

REGISTERED PROFESSIONAL ENGINEER J. E. ROBERTS No. 11428 Exp. 12-31-88 CIVIL STATE OF CALIFORNIA

Chief, Office of Office Engineer
Registered Civil Engineer

REGISTERED PROFESSIONAL ENGINEER P.W. KELLEY No. 15161 Exp. 3-31-89 CIVIL STATE OF CALIFORNIA

APPROVAL RECOMMENDED BY
DESIGN SUPERVISOR CE 13175

Submitted By: C 8770 REGISTRATION NUMBER; Sr. Architect	DESIGNER GOM	CHECKED BY 1/4/88	REVIEWED BY 1-14-88	SHEET LEGEND: A-1 ARCHITECTURAL, M-1 MECHANICAL, S-1 STRUCTURAL, E-1 ELECTRICAL, C-1 CIVIL, L-1 LANDSCAPE	State of CALIFORNIA DEPARTMENT OF TRANSPORTATION
Approval Recommended By: CE 13175 Chief, Office of Structure Design	DRAWN BY MKM	STRUCTURAL REVIEW			
	REVISED BY	SPECIFICATIONS 1-19-88			

DIVISION OF STRUCTURES ARCHITECTURAL DESIGN	BRIDGE NO. 33M5785	SFOBB TOLL PLAZA CANOPY	SHEET A0
PRODUCTION ARCHITECT C 01524	POST MILE 2.0-2.1	TITLE SHEET	

Contract No. 04-003184

05 050 2179 (2/86)

ORIGINAL SCALE IN INCHES FOR REDUCED PLANS 0 1 2 3

CU 04334
EA 003181

Disregard prints bearing earlier revision dates

REVISION DATES (PRELIMINARY STAGE ONLY) SHEET OF

DIST.	COUNTY	ROUTE	POST MILES TOTAL PROJECT	SHEET NO.	TOTAL SHEETS
04	Ala	80	2.0	[illegible]	[illegible]

David G. Stein
SENIOR ARCHITECT
1-25-88
PLANS APPROVAL DATE

REGISTERED ARCHITECT — DAVID G. STEIN — No. C-8770 — Exp. 5/31/89 — STATE OF CALIFORNIA

ARCHITECTURAL ABBREVIATIONS

&	AND
∠	ANGLE
@	AT
℄	CENTERLINE
ϕ	DIAMETER or ROUND
⌗	SQUARE
d	PENNY (nail size)
#	POUND or NUMBER
°	DEGREE
AB	ANCHOR BOLT
ABV	ABOVE
AC	ASPHALT CONCRETE
A/C	AIR CONDITIONING
ACR	ACRYLIC
ACOUS	ACOUSTICAL
AC T	ACOUSTICAL TILE
ADDL	ADDITIONAL
ADJ	ADJUSTABLE
AGGR	AGGREGATE
ALUM	ALUMINUM
APPROX	APPROXIMATE
ARCH	ARCHITECTURAL
ASB	ASBESTOS
ASPH	ASPHALT
BB	BULLETIN BOARD
BD	BOARD
BIT	BITUMINOUS
BLDG	BUILDING
BLK	BLOCK
BLKG	BLOCKING
BR	BULLET RESISTANT
BM	BEAM
BOT	BOTTOM
BR	BRIDGE
BRG	BEARING
BTWN	BETWEEN
BUR	BUILT-UP ROOFING
CAB	CABINET
CB	CATCH BASIN
CEM	CEMENT
CER T	CERAMIC TILE
CL	CHAIN LINK
CIP	CAST-IN-PLACE
CIR	CIRCLE
CJ	CONTROL JOINT
CKBD	CHALK BOARD
CL	CENTERLINE
CLG	CEILING
CLOS	CLOSET
CLR	CLEAR
COL	COLUMN
CONST	CONSTRUCTION
CMP	CORRUGATED METAL PIPE
CMU	CONCRETE MASONRY UNIT
CONC	CONCRETE
CONN	CONNECTION
CONT	CONTINUOUS
CORR	CORRIDOR
CTOP	COUNTERTOP
CTR	CENTER
CTSK	COUNTERSUNK
CY	CUBIC YARD
CMS	CHANGEABLE MESSAGE SIGN
DBL	DOUBLE
DEPT	DEPARTMENT
DET	DETAIL
DEG	DEGREE
DD	DOOR DIMENSION
DF	DRINKING FOUNTAIN
DI	DRAIN INLET
DIA	DIAMETER
DIM	DIMENSION
DL	DEAD LOAD
DN	DOWN
DS	DOWNSPOUT
DET	DETAIL
DWG	DRAWING
DWR	DRAWER
E	EAST
(E)	EXISTING
EA	EACH
EHD	ELECTRIC HAND DRYER
EJM	EXPANSION JOINT MATERIAL
EL	ELEVATION
ELEC	ELECTRICAL
ELVR	ELEVATOR
EMER	EMERGENCY
ENCL	ENCLOSURE
EPB	ELECTRICAL PANEL BOARD
EQ	EQUAL
EQUP	EQUIPMENT
ESC	ESCALATOR
EWC	ELECTRIC WATER COOLER
EXIST	EXISTING
EXP	EXPANSION
EXPO	EXPOSED
EXT	EXTERIOR
EMS	EXTINGUISHABLE MESSAGE SIGN
FA	FAUCET ASSEMBLY
FD	FLOOR DRAIN
FDN	FOUNDATION
FG	FINISH GRADE
FE	FIRE EXTINGUISHER
FH	FIRE HYDRANT
FHC	FIRE HOSE CABINET
FHWS	FLAT HEAD WOOD SCREW
FIN	FINISH
FJ	FLOOR JOIST
FLR	FLOOR
FLSH	FLASHING
FLUR	FLUORESCENT
FOC	FACE OF CONCRETE
FOF	FACE OF FINISH
FOM	FACE OF MASONRY
FOS	FACE OF STUD
FBRP	FIBER REINFORCED PLASTIC
FRP	FIRE RATED PARTITION
FS	FULL SIZE
FT	FOOT or FEET
FTG	FOOTING
FURR	FURRING
FWY	FREEWAY
FO	FACE OF
GA	GAGE
GAL	GALLON
GALV	GALVANIZED
GB	GRAB BAR
GI	GALVANIZED IRON
GL	GLASS
GLB	GLUED LAMINATED BEAM
GLU LAM	GLUED LAMINATED
GLZ	GLAZING
GND	GROUND
GR	GRADE
GYP BD	GYPSUM BOARD
HB	HOSE BIB
HC	HOLLOW CORE
HD	HOLD DOWN
HCP	HANDICAPPED
HDR	HEADER
HDWD	HARDWOOD
HDWE	HARDWARE
HEX	HEXAGONAL
HF	HOSE FAUCET
HM	HOLLOW METAL
HT	HEIGHT
HORZ	HORIZONTAL
HP	HIGH POINT
HR	HOUR
HS	HIGH STRENGTH
HWY	HIGHWAY
ID	INSIDE DIAMETER
IN	INCH
INSUL	INSULATION
INT	INTERIOR
JAN	JANITOR
JT	JOINT
JST	JOIST
KIPS	KILO POUNDS
KIT	KITCHEN
LAB	LABORATORY
LAV	LAVATORY
LF	LINEAR FEET
LL	LIVE LOAD
LKR	LOCKER
LIQ	LIQUID
LS	LAG SCREW
LT	LIGHT
MAX	MAXIMUM
MB	MACHINE BOLT
MECH	MECHANICAL
MEMB	MEMBRANE
MET	METAL
MFR	MANUFACTURER
MH	MAN HOLE
MIN	MINIMUM
MIR	MIRROR
MISC	MISCELLANEOUS
MO	MASONRY OPENING
MR	MOISTURE RESISTANT
MS	MAINTENANCE STATION
MTD	MOUNTED
MTL	MATERIAL
MUL	MULLION
N	NORTH
ND	NAPKIN DISPENSER
NIC	NOT IN CONTRACT
No	NUMBER
NR	NAPKIN RECEPTACLE
NTS	NOT TO SCALE
OA	OVERALL
OBS	OBSCURE
OC	ON CENTER
OD	OUTSIDE DIAMETER
OFF	OFFICE
OG	ORIGINAL GRADE
OH	OPPOSITE HAND
OHSD	OVERHEAD SECTIONAL DOOR
OPNG	OPENING
OPP	OPPOSITE
OVH	OVERHEAD
P	PITCH
PARA	PARALLEL
PB	PULL BOX
PC	PRECAST CONCRETE
PERF	PERFORATED
PERT	PRESERVATIVE TREATED
PH	PHILLIPS HEAD
PL	PLATE
PLAM	PLASTIC LAMINATE
PLAS	PLASTER
PLWD	PLYWOOD
PMF	PRESSED METAL FRAME
PP	PONDEROSA PINE
PR	PAIR
PSF	POUNDS PER SQUARE FOOT
PSI	POUNDS PER SQUARE INCH
PT	POINT
PTD	PAPER TOWEL DISPENSER
PTR	PAPER TOWEL RECEPTACLE
PTN	PARTITION
QT	QUARRY TILE
R	RISER
RAD	RADIUS
RD	ROOF DRAIN
REF	REFERENCE
REFG	REFRIGERATOR
REINF	REINFORCEMENT
REQ	REQUIRED
RESIL	RESILIENT
RET	RETAINING
RFG	ROOFING
RJ	ROOF JOIST
RM	ROOM
RO	ROUGH OPENING
RTE	ROUTE
RWD	REDWOOD
R/W	RIGHT OF WAY
S	SOUTH
SC	SOLID CORE
SCHED	SCHEDULE
SD	SOAP DISPENSER
SECT	SECTION
SF	SQUARE FOOT
SHR	SHOWER
SHT	SHEET
SHTG	SHEATHING
SIM	SIMILAR
SMS	SHEET METAL SCREW
SPEC	SPECIFIED
SP	SUGAR PINE
SQ	SQUARE
SRRA	SAFETY ROADSIDE REST AREA
SS	SERVICE SINK
SST	STAINLESS STEEL
STA	STATION
STD	STANDARD
STL	STEEL
STOR	STORAGE
STR	STRAIGHT
STRUC	STRUCTURAL
SUSP	SUSPENDED
SW	SHEAR WALL
SYM	SYMMETRICAL
T	TREAD
TB	TOLL BOOTH
TC	TOP OF CURB or CONCRETE
TEL	TELEPHONE
TEMP	TEMPORARY
TER	TERRAZO
T&G	TONGUE AND GROOVE
TJ	TOOLED JOINT
THK	THICK
TP	TOP OF PAVEMENT
TOT	TOTAL
TOIP	TOILET PARTITION
TS	TUBULAR STEEL
TSCD	TOILET SEAT COVER DISPENSER
TTD	TOILET TISSUE DISPENSER
TYP	TYPICAL
UNF	UNFINISHED
UNO	UNLESS NOTED OTHERWISE
UR	URINAL
URSC	URINAL SCREEN
VAR	VARIES
VCT	VINYL COMPOSITION TILE
VERT	VERTICAL
VEST	VESTIBULE
W	WEST
W/	WITH
WC	WATER CLOSET
WD	WOOD
WDO	WINDOW
WD	WINDOW DIMENSION
WH	WATER HEATER
W/O	WITHOUT
WP	WORKING POINT
WR	WASTE RECEPTACLE
WRPF	WATER PROOF
WRR	WATER RESISTANT
WSCT	WAINSCOT
WT	WEIGHT
WWF	WELDED WIRE FABRIC

SYMBOLS

EARTH
AC PAVING
EXISTING CONSTRUCTION
EXISTING TO BE REMOVED
CONCRETE
PRECAST CONCRETE
STUD WALL
CONCRETE MASONRY UNIT
STRUCTURAL STEEL
SAND / MORTAR / PLASTER
BATT INSULATION
RIGID INSULATION
CERAMIC TILE
GLASS
PLYWOOD
GYPSUM BOARD
BEAM OR MEMBER OVERHEAD
FIRE RATED PARTITION
FINISH WOOD
WOOD FRAMING (CONTINUOUS)
WOOD BLOCKING
SECTION LETTER
SHEET NUMBER
DETAIL NUMBER
SHEET NUMBER
DETAIL NUMBER
SAME SHEET
ELEVATION LETTER
SHEET NUMBER
DOOR NUMBER
WINDOW TYPE LETTER
ROOM NUMBER
WORKING POINT
MATCH LINE

GENERAL NOTES

1. THE CONTRACTOR SHALL VERFIY ALL CONTROLLING FIELD DIMENSIONS AND CONDITIONS BEFORE ORDERING OR FABRICATING ANY MATERIAL. THE CONTRACTOR SHALL NOTIFY THE ENGINEER IN WRITING OF ANY DISCREPANCIES BETWEEN THESE PLANS AND ACTUAL CONDITIONS OR MEASUREMENTS.

BUILDING CODE DATA

TYPE OF CONSTRUCTION TYPE 3-N

REDUCED PLAN
USE SCALE BELOW
0 1 2 3
3 INCHES ON ORIGINAL PLAN

APPROVED FIRE AND BANG ONLY
STATE FIRE MARSHAL COASTAL REGION

SCHEMATIC AND CONCEPTUAL DESIGN BY
SKIDMORE, OWINGS, & MERRILL

DESIGNED BY SOM
DRAWN BY MITZ K MIZUTANI
CHECKED BY S. Bhasin 1/4/88 — 1-26-87
STRUCTURAL REVIEW
SPECIFICATIONS T. Shimura

State of CALIFORNIA
DEPARTMENT OF TRANSPORTATION

DIVISION OF STRUCTURES
ARCHITECTURAL DESIGN
PRODUCTION ARCHITECT C 015241

BRIDGE NO. 33M5785
POST MILE 2.0-2.1

SFOBB TOLL PLAZA CANOPY
ARCHITECTURAL ABBREVIATIONS, SYMBOLS AND GENERAL NOTES

SHEET A1

CU 04334
EA 003181

ORIGINAL SCALE IN INCHES FOR REDUCED PLANS 0 1 2 3

Disregard prints bearing earlier revision dates
REVISION DATES (PRELIMINARY STAGE ONLY) 7/87 [illegible] 1/12/88

SHEET OF

DS OSD 2180 (2/86)

DIST.	COUNTY	ROUTE	POST MILES—TOTAL PROJECT	SHEET NO.	TOTAL SHEETS
04	ALA	80	2.0	3	68

SENIOR ARCHITECT — REGISTRATION NUMBER C-8770

DATE APPROVED 1-25-88

REGISTERED ARCHITECT D. G. STOW No. C-8770 Exp. 5-31-88 ARCHITECT STATE OF CALIFORNIA

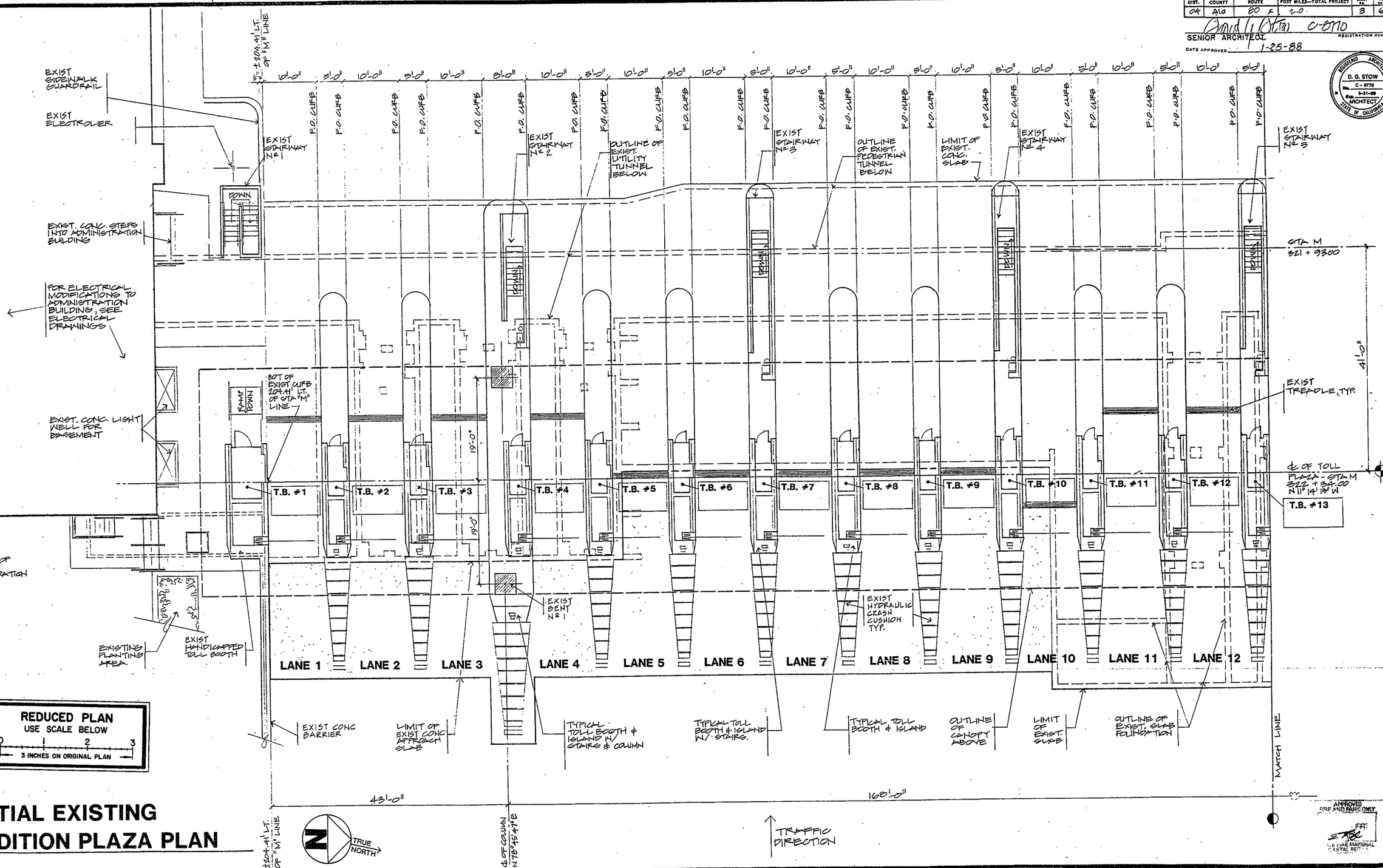

PARTIAL EXISTING CONDITION PLAZA PLAN

1/8" = 1'-0"

APPROVED FIRE AND PANIC ONLY
STATE FIRE MARSHAL COASTAL REGION

3

SCHEMATIC AND CONCEPTUAL DESIGN BY
SKIDMORE, OWINGS, & MERRILL

DESIGNER	EGM	CHECKED BY	G. Okami 1/4/88
DRAWN BY	DAVE LOWE MKM	REVIEWED BY	Stanley Schwarz 4-24-87
REVISED BY		STRUCTURAL REVIEW	

State of CALIFORNIA DEPARTMENT OF TRANSPORTATION

DIVISION OF STRUCTURES ARCHITECTURAL DESIGN
PRODUCTION ARCHITECT C015341

BRIDGE NO. 33-M 5785
POST MILE 2.0 - 2.1

SFOBB TOLL PLAZA CANOPY
PARTIAL EXISTING CONDITION PLAZA PLAN

SHEET A2

DS 0180 (Rev 5/85) 36241-500 5-85 500 GSP

ORIGINAL SCALE IN INCHES FOR REDUCED PLANS 0 1 2 3

CU 04334
WO 003181

Disregard prints bearing earlier revision dates

REVISION DATES (PRELIMINARY STAGE ONLY) 1/7/87 1/8/87 1/5/88

SHEET OF

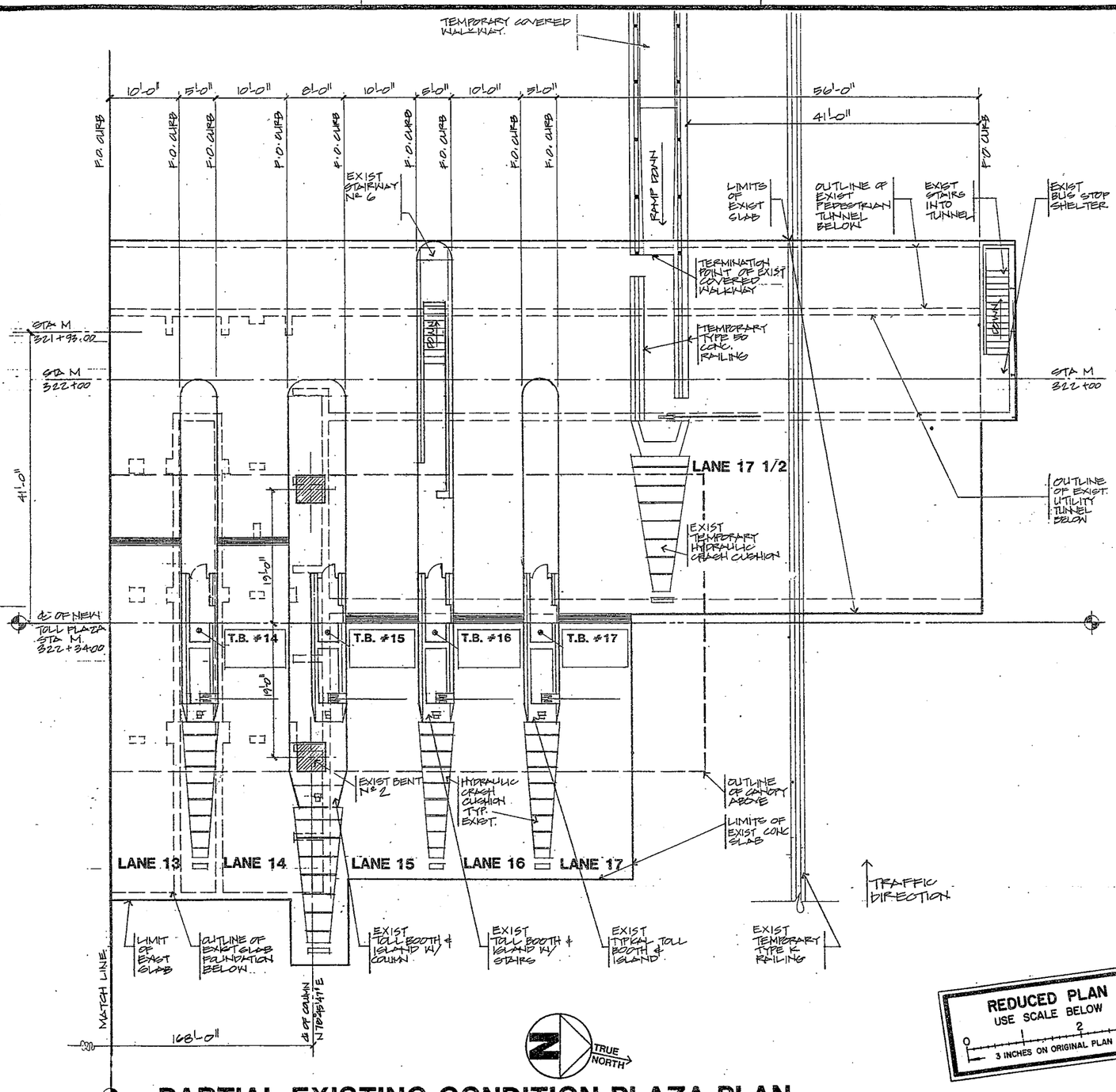

PARTIAL EXISTING CONDITION PLAZA PLAN

1/8" = 1'-0"

REDUCED PLAN
USE SCALE BELOW
0 1 2 3
3 INCHES ON ORIGINAL PLAN

DIST.	COUNTY	ROUTE	POST MILES—TOTAL PROJECT	SHEET No.	TOTAL SHEETS
04	Ala	80	2.0	4	68

REGISTERED ARCHITECT D. G. STOW No. C-8770 Exp. 5-31-89 ARCHITECT STATE OF CALIFORNIA

SENIOR ARCHITECT D. G. Stow C-8770 REGISTRATION NUMBER

DATE APPROVED 1-25-88

COLOR AND COATING SCHEDULE

PRODUCTS FOR THIS PROJECT ARE SELECTED AS REFERENCES OF PREFERRED PATTERN COLOR & TEXTURE. OTHER PRODUCTS THAN THOSE LISTED SHOULD INCLUDE SAMPLES OF MANUFACTURER'S COLOR & PATTERN SELECTIONS FOR CONFORMATION BY THE ENGINEER.

ALL EXPOSED SMALL PIPES, CONDUITS, ETC. AND CONTIGUOUS FASTENERS AND ELECTRICAL ACCESS PANELS AND BOXES SHALL MATCH ADJACENT BACKGROUND COLORS.

THE FOLLOWING REFERENCED COATING SYSTEMS ARE NUMBERED AS OUTLINED IN SPECIAL PROVISIONS.

COMPONENT	COATING SYSTEM	COLOR & FINISH
METAL PANELS (BACKSIDE)	NO. 5	ANY LIGHT COLOR
METAL PANELS (EXTERIOR)	NO. 5	"PPG INDUSTRIES INC." 5 ZM 93932 CHAMPAGNE METALLIC
ALUMINUM REVEAL EXCEPT WHERE OTHERWISE NOTED	NO. 5	"PPG INDUSTRIES INC." UC 54028 XL CHAMPAGNE METALLIC
CURTAIN WALL FRAMING EXCEPT FOR SPANDRELS	NO. 5	↓
TRAFFIC INDICATOR LIGHT REFLECTOR CONE	NO. 5	↓
COLUMN REVEAL	NO. 5	↓
ALUMINUM EXTRUSIONS	NO. 5	↓
EXTERIOR GALV. SHEET COMPONENTS	NO. 4	↓
COLUMN CLADDING	NO. 2	↓
ALUMINUM REVEAL AT JAMB OF EMS SPANDREL	NO. 5	"PPG INDUSTRIES INC." UC 54118 BLACK
CURTAIN WALL FRAMING FOR SPANDREL	NO. 5	↓
ALL STEEL SURFACES INSIDE CANOPY	NO. 1	WHITE
UNDERSIDE OF GALV. METAL DECK	NO. 3	↓
WALKWAY, LADDERS, CABLE RAILING	NO. 3	↓
SEALANT		BLACK

APPROVED FIRE AND RESCUE ONLY
STATE FIRE MARSHAL COASTAL REGION

SCHEMATIC AND CONCEPTUAL DESIGN BY
SKIDMORE, OWINGS, & MERRILL

DESIGNER	SOM	CHECKED BY	J. Ikami 1/4/88
DRAWN BY	DOUG LOWE MKM	REVIEWED BY	4-24-87
REVISED BY		STRUCTURAL REVIEW	

State of CALIFORNIA
DEPARTMENT OF TRANSPORTATION

DIVISION OF STRUCTURES
ARCHITECTURAL DESIGN
PRODUCTION ARCHITECT C01524

BRIDGE NO. 33 M 5785
POST MILE 2.0-2.1

SFOBB TOLL PLAZA CANOPY
PARTIAL EXISTING CONDITION PLAZA PLANS, COLOR AND COATING SCHEDULE

SHEET A3

CS D180 (Rev 5/85) 36241-500 5-85 500 OSP

ORIGINAL SCALE IN INCHES FOR REDUCED PLANS 0 1 2 3

CU 04334
WO 003181

Disregard prints bearing earlier revision dates

REVISION DATES (PRELIMINARY STAGE ONLY) 1/29/87 1/12/88

SHEET OF

DIST.	COUNTY	ROUTE	POST MILES—TOTAL PROJECT	SHEET No.	TOTAL SHEETS
04	SFO	80	2.0	5	68

SENIOR ARCHITECT — REGISTRATION NUMBER C-8770

DATE APPROVED 1-25-88

REGISTERED ARCHITECT D. G. STOW No. C-8770 Exp. 5-31-89 ARCHITECT STATE OF CALIFORNIA

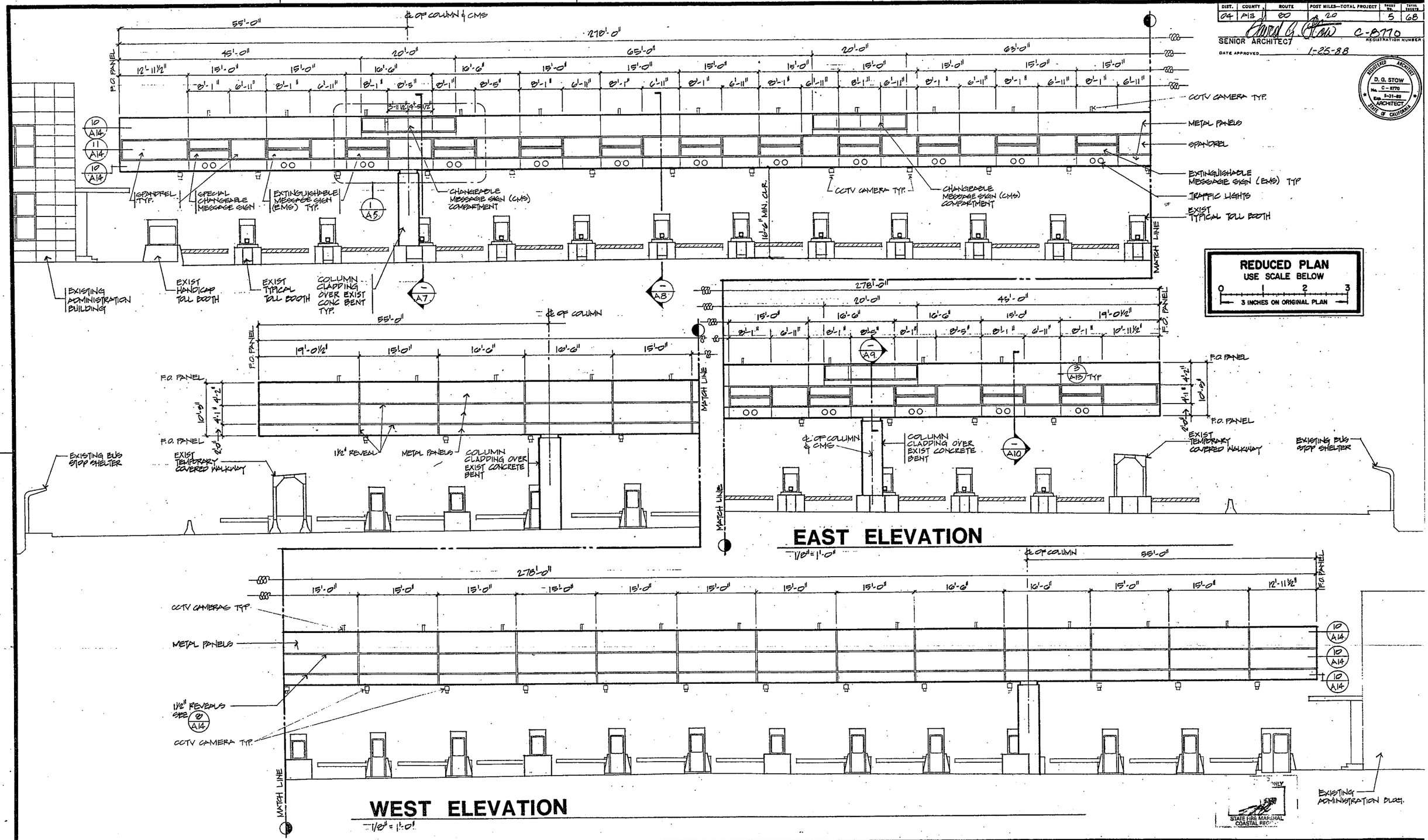

SCHEMATIC AND CONCEPTUAL DESIGN BY	DESIGNER	CHECKED BY	State of CALIFORNIA DEPARTMENT OF TRANSPORTATION	DIVISION OF STRUCTURES ARCHITECTURAL DESIGN	BRIDGE NO.	SFOBB TOLL PLAZA CANOPY	SHEET
SKIDMORE, OWINGS, & MERRILL	SOM	J. Skamu 1/4/88			35 M 5165	EAST ELEVATION, WEST ELEVATION	A4
	DRAWN BY CRAIG NAKAHARA	REVIEWED BY 8-19-86		PRODUCTION ARCHITECT C015341	POST MILE 20-2.1		
	REVISED BY DOUG LONE	STRUCTURAL REVIEW					

DS DISO (Rev 5/85) 36241-500 5-85 300 OSP

ORIGINAL SCALE IN INCHES FOR REDUCED PLANS 0 1 2 3

CU 04534
WO 003181

Disregard prints bearing earlier revision dates

REVISION DATES (PRELIMINARY STAGE ONLY)

SHEET OF

5

DIST.	COUNTY	ROUTE	POST MILES—TOTAL PROJECT	SHEET NO.	TOTAL SHEETS
04	Ala	80	0/2.0	6	68

SENIOR ARCHITECT — REGISTRATION NUMBER C-8770

DATE APPROVED 1-25-88

REGISTERED ARCHITECT — D. G. STOW — No. C-8770 — Exp. 5-31-89 — ARCHITECT — STATE OF CALIFORNIA

REDUCED PLAN
USE SCALE BELOW
0 1 2 3
3 INCHES ON ORIGINAL PLAN

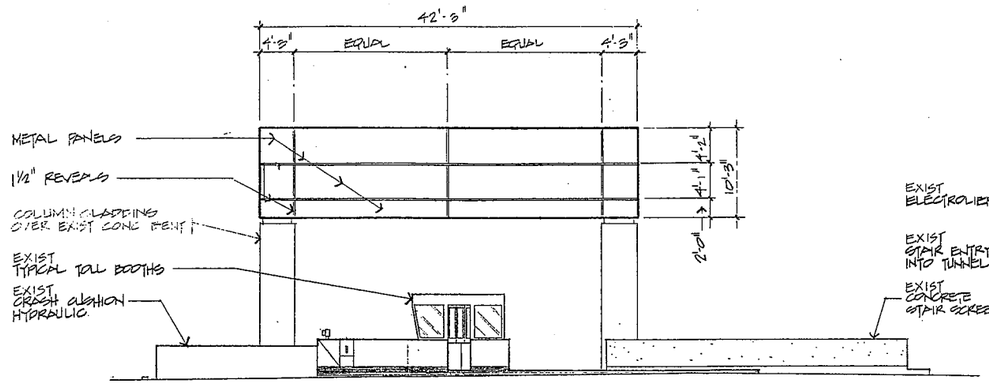

NORTH ELEVATION
1/8" = 1'-0"

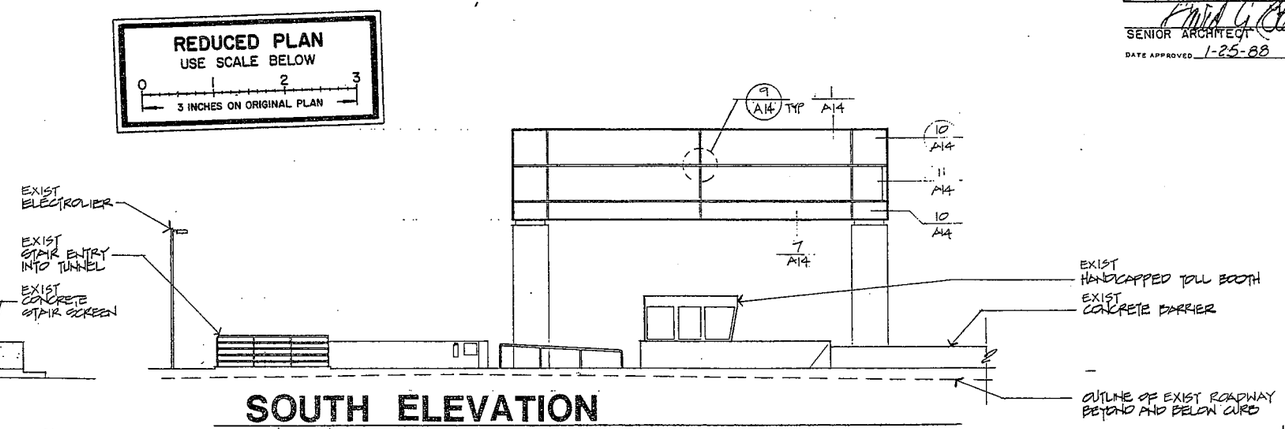

SOUTH ELEVATION
1/8" = 1'-0"

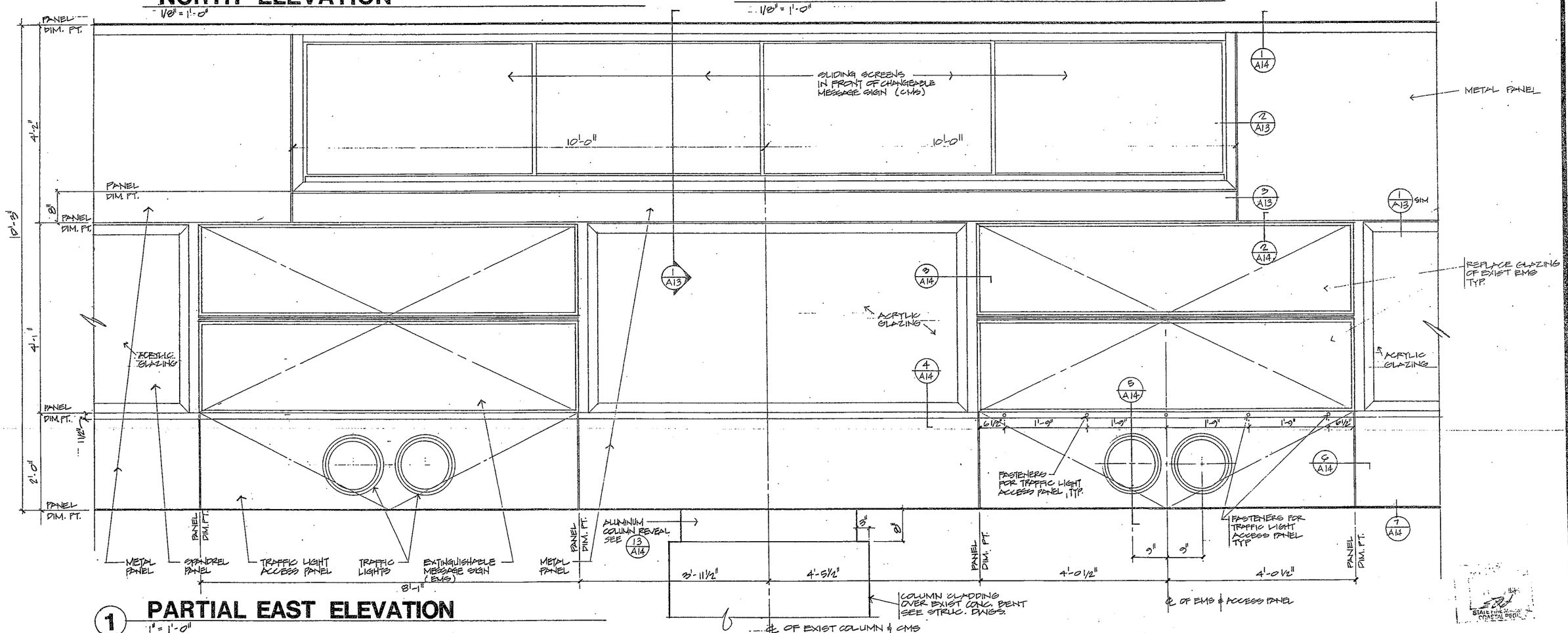

1 PARTIAL EAST ELEVATION
1" = 1'-0"

STATE FINE ARTS MUSEUM COASTAL DECIL

SCHEMATIC AND CONCEPTUAL DESIGN BY SKIDMORE, OWINGS, & MERRILL	DESIGNER SOM	CHECKED BY J. Ikawa 1/4/88	State of CALIFORNIA DEPARTMENT OF TRANSPORTATION	DIVISION OF STRUCTURES ARCHITECTURAL DESIGN	BRIDGE NO. 33M5185	SFOBB TOLL PLAZA CANOPY
	DRAWN BY CRAIG NAKAHARA, DOUG LONE MKM	REVIEWED BY J. Ikawa 8-9-88		PRODUCTION ARCHITECT C015341	POST MILE 2.0-2.1	NORTH ELEVATION, SOUTH ELEVATION, PARTIAL ELEVATION
	REVISED BY	STRUCTURAL REVIEW				SHEET A5

DS D180 (Rev 5/85) 36261-500 3-85 50M OSP

ORIGINAL SCALE IN INCHES FOR REDUCED PLANS 0 1 2 3

CU 04334
WO 003181

Disregard prints bearing earlier revision dates

REVISION DATES (PRELIMINARY STAGE ONLY) 7/1/88

SHEET OF

DIST.	COUNTY	ROUTE	POST MILES—TOTAL PROJECT	SHEET NO.	TOTAL SHEETS
04	ALA	80	2.0	7	68

SENIOR ARCHITECT David G. Stow REGISTRATION NUMBER C-8770

DATE APPROVED 1-25-88

REGISTERED ARCHITECT D. G. STOW No. C-8770 Exp. 5-31-88 ARCHITECT STATE OF CALIFORNIA

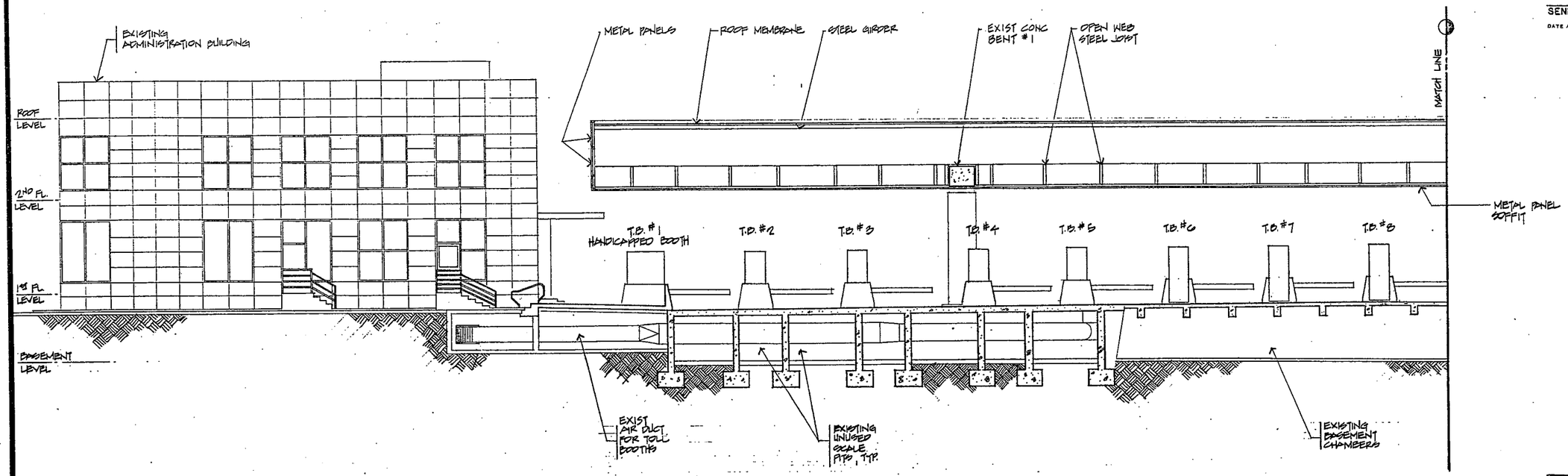

REDUCED PLAN
USE SCALE BELOW
0 1 2 3
3 INCHES ON ORIGINAL PLAN

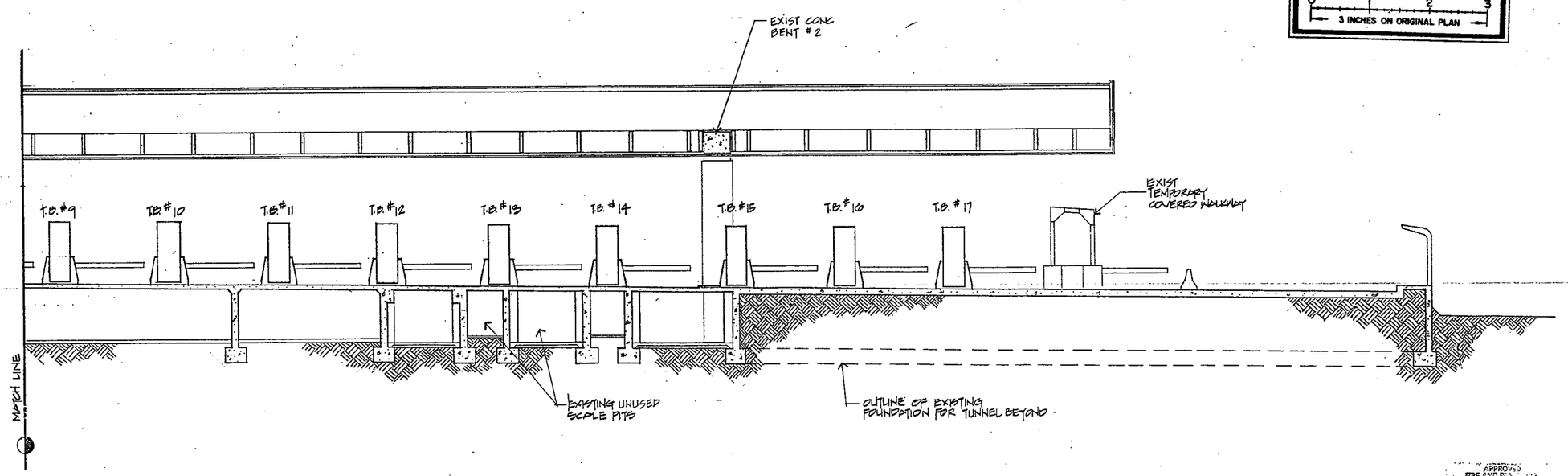

LONGITUDINAL SECTION

1/8" = 1'-0"

APPROVED FIRE AND POLICE STATE FIRE MARSHAL TRAFFIC REGION

7

SCHEMATIC AND CONCEPTUAL DESIGN BY SKIDMORE, OWINGS, & MERRILL	DESIGNER SOM	CHECKED BY 1/4/88	State of CALIFORNIA DEPARTMENT OF TRANSPORTATION
	DRAWN BY CRAIG NAKAHARA	REVIEWED BY 8-19-88	
	REVISED BY	STRUCTURAL REVIEW	

DIVISION OF STRUCTURES ARCHITECTURAL DESIGN
PRODUCTION ARCHITECT C015341

BRIDGE NO.	POST MILE
33 M 5785	2.0 - 2.1

SFOBB TOLL PLAZA CANOPY
LONGITUDINAL PLAZA SECTION

SHEET A6

DS 0180 (Rev 5/85) 35241-500 5-85 500 GSP

ORIGINAL SCALE IN INCHES FOR REDUCED PLANS 0 1 2 3

CU 04334
WO 003181

Disregard prints bearing earlier revision dates

REVISION DATES (PRELIMINARY STAGE ONLY) 1/8/87

SHEET OF

DIST.	COUNTY	ROUTE	POST MILES—TOTAL PROJECT	SHEET NO.	TOTAL SHEETS
04	Ala	80	12.0	8	68

SENIOR ARCHITECT David G. Stow REGISTRATION NUMBER C-8770

DATE APPROVED 1-25-88

REGISTERED ARCHITECT D. G. STOW No. C-8770 Exp. 5-31-89 ARCHITECT STATE OF CALIFORNIA

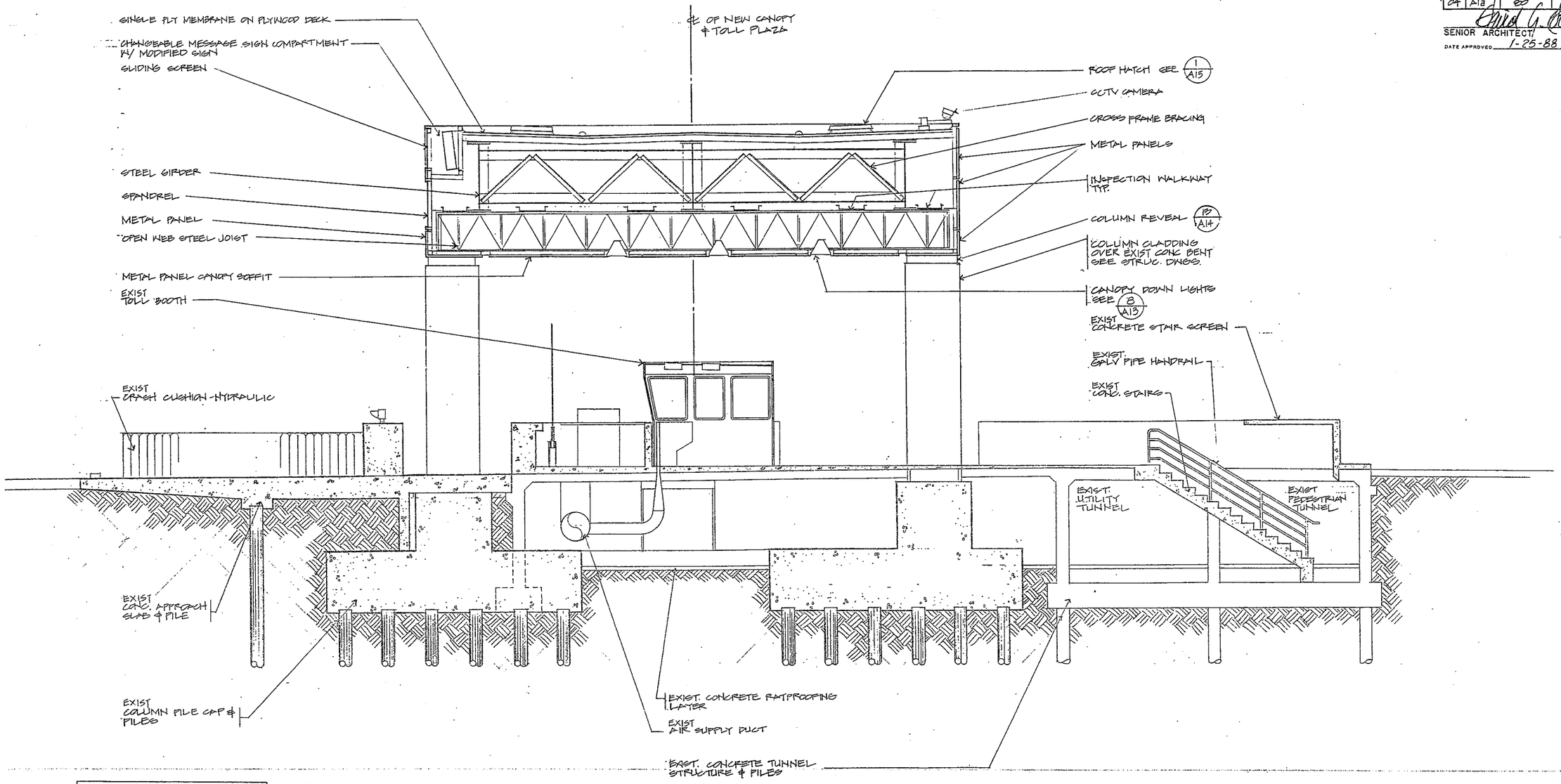

REDUCED PLAN
USE SCALE BELOW
0 1 2 3
3 INCHES ON ORIGINAL PLAN

TRANSVERSE SECTION AT TOLL BOOTH NO.4

1/4" = 1'-0"

APPROVED FIRE AND PANIC ONLY STATE FIRE MARSHAL (COASTAL REGION)

SCHEMATIC AND CONCEPTUAL DESIGN BY SKIDMORE, OWINGS, & MERRILL	DESIGNER SCM	CHECKED BY 1/4/88	State of CALIFORNIA DEPARTMENT OF TRANSPORTATION	DIVISION OF STRUCTURES ARCHITECTURAL DESIGN	BRIDGE NO. 33M5785	SFOBB TOLL PLAZA CANOPY	SHEET A7
	DRAWN BY DOUG LOWE MKM	REVIEWED BY 8-19-88		PRODUCTION ARCHITECT C015341	POST MILE 2.0-2.1	PLAZA SECTION	
	REVISED BY	STRUCTURAL REVIEW					

D180 (Rev 5/85) 36241-500 5-85 300 OSP

ORIGINAL SCALE IN INCHES FOR REDUCED PLANS 0 1 2 3

CU 04334
WO 0031811

Disregard prints bearing earlier revision dates

REVISION DATES (PRELIMINARY STAGE ONLY) SHEET OF

A5 F1

DIST.	COUNTY	ROUTE	POST MILES—TOTAL PROJECT	SHEET NO.	TOTAL SHEETS
04	ALA	80	2.0	9	68

SENIOR ARCHITECT — REGISTRATION NUMBER C-8770

DATE APPROVED 1-25-88

REGISTERED ARCHITECT D. G. STOW No. C-8770 Exp. 5-31-89 ARCHITECT STATE OF CALIFORNIA

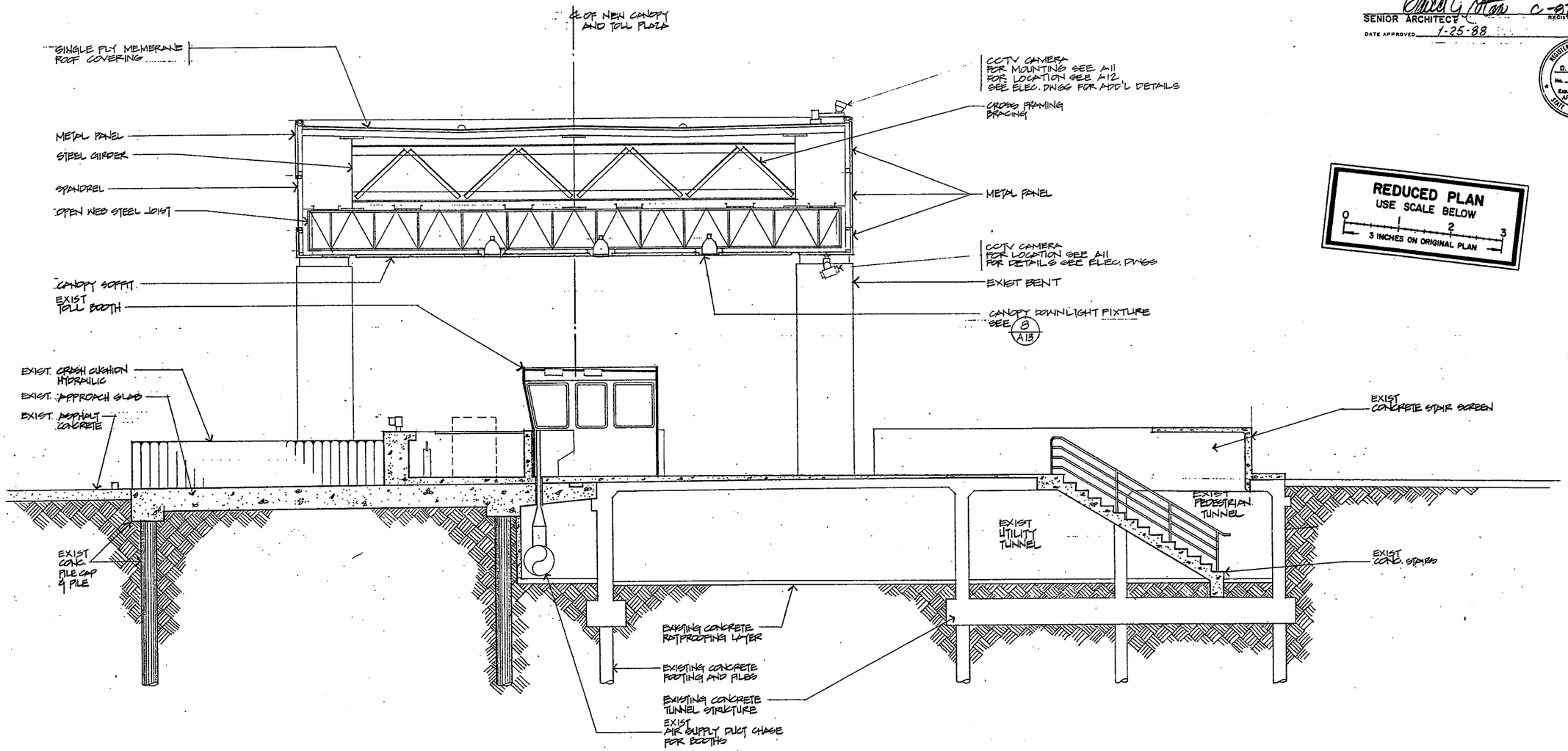

REDUCED PLAN
USE SCALE BELOW
0 1 2 3
3 INCHES ON ORIGINAL PLAN

TRANSVERSE SECTION AT TOLL BOOTH NO. 7

1/4" = 1'-0"

APPROVED FIRE AND PANIC ONLY

9

SCHEMATIC AND CONCEPTUAL DESIGN BY SKIDMORE, OWINGS, & MERRILL	DESIGNER SOM	CHECKED BY 1/4/88	State of CALIFORNIA DEPARTMENT OF TRANSPORTATION	DIVISION OF STRUCTURES ARCHITECTURAL DESIGN	BRIDGE NO. 33M5788	SFOBB TOLL PLAZA CANOPY	SHEET A8
	DRAWN BY CRAIG T. NAKAHARA MKM	REVIEWED BY		PRODUCTION ARCHITECT	POST MILE 2.0-2.1	PLAZA SECTION	
	REVISED BY	STRUCTURAL REVIEW					

DS D180 (Rev 5/85) 38141-500 5-85 500 OSP

ORIGINAL SCALE IN INCHES FOR REDUCED PLANS 0 1 2 3

CU 04334
WO 003181

Disregard prints bearing earlier revision dates →

REVISION DATES (PRELIMINARY STAGE ONLY) 12-7-87 12-14-87 1-12-88

SHEET OF

DIST.	COUNTY	ROUTE	POST MILES—TOTAL PROJECT	SHEET NO.	TOTAL SHEETS
04	A12	80	8.0	10	68

SENIOR ARCHITECT C-8770 REGISTRATION NUMBER

DATE APPROVED 1-25-88

REGISTERED ARCHITECT D. G. STOW No. C-8770 Exp. 5-31-89 ARCHITECT STATE OF CALIFORNIA

REDUCED PLAN
USE SCALE BELOW
0 1 2 3
3 INCHES ON ORIGINAL PLAN

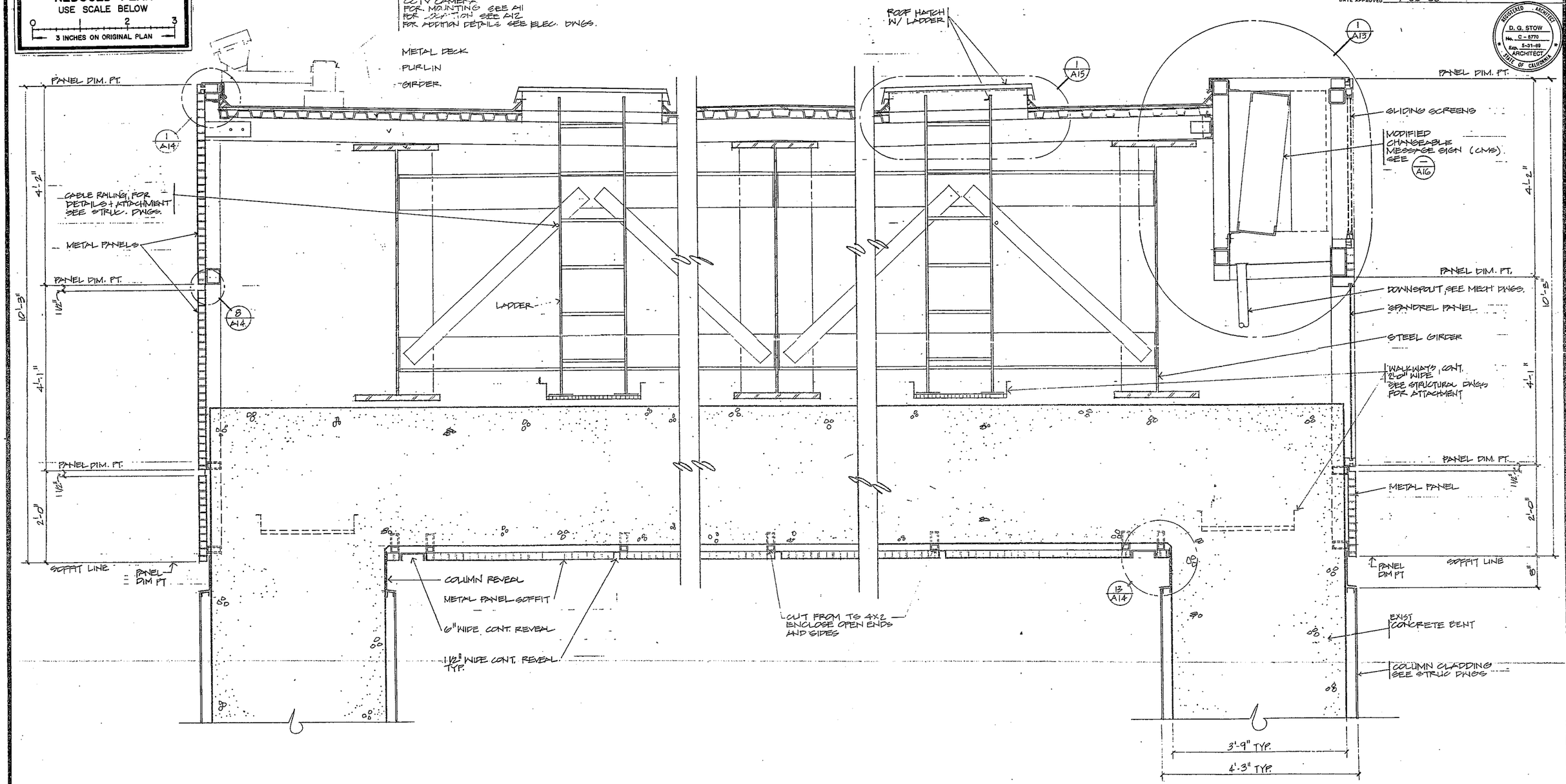

CANOPY SECTION

1" = 1'-0"

APPROVED FIRE AND PROTECTION ONLY STATE FIRE MARSHAL COASTAL ZONE

SCHEMATIC AND CONCEPTUAL DESIGN BY SKIDMORE, OWINGS, & MERRILL	DESIGNER GOM	CHECKED BY	State of CALIFORNIA DEPARTMENT OF TRANSPORTATION	DIVISION OF STRUCTURES ARCHITECTURAL DESIGN	BRIDGE NO. 33M5705	SFOBB TOLL PLAZA CANOPY	SHEET A9
	DRAWN BY DOUG LONG MKA	REVIEWED BY			POST MILE 2.0-2.1	CANOPY SECTION	
	REVISED BY	STRUCTURAL REVIEW		PRODUCTION ARCHITECT			

DS D180 (Rev 5/85) 36241-500 5-85 560 OSP

ORIGINAL SCALE IN INCHES FOR REDUCED PLANS 0 1 2 3

CU 04334
WO 003181

Disregard prints bearing earlier revision dates

REVISION DATES (PRELIMINARY STAGE ONLY) 1/13/88 1/13/88

SHEET OF

DIST.	COUNTY	ROUTE	POST MILES—TOTAL PROJECT	SHEET No.	TOTAL SHEETS
04	A13	880	8.2.0	11	68

SENIOR ARCHITECT D. G. Stow REGISTRATION NUMBER C-8770

DATE APPROVED 1-25-88

REGISTERED ARCHITECT D. G. STOW No. C-8770 Exp. 5-31-89 ARCHITECT STATE OF CALIFORNIA

REDUCED PLAN
USE SCALE BELOW
0 1 2 3
3 INCHES ON ORIGINAL PLAN

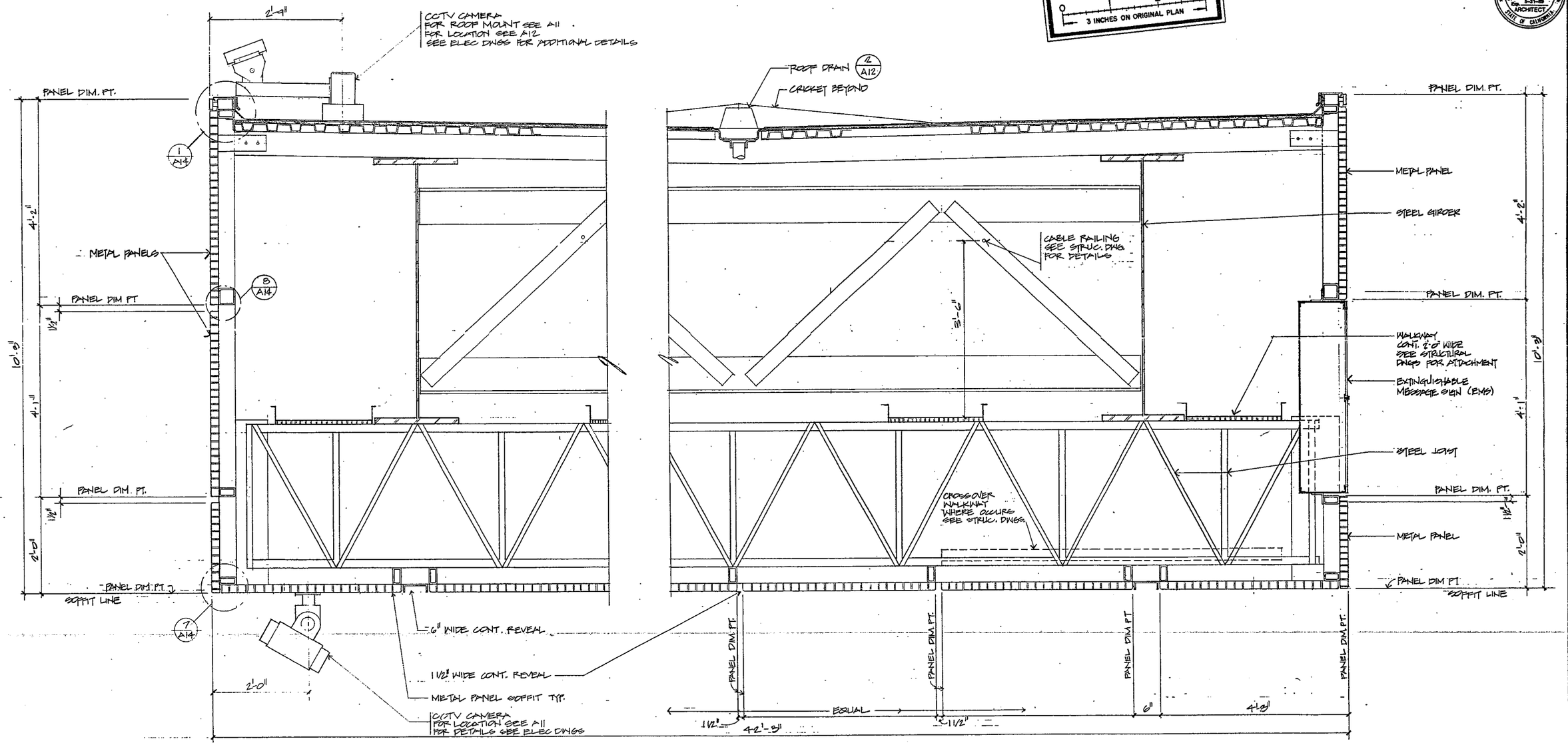

CANOPY SECTION

1" = 1'-0"

APPROVED
FIRE AND PANIC ONLY
JUL 1 1987
STATE FIRE MARSHAL
COASTAL REGION

SCHEMATIC AND CONCEPTUAL DESIGN BY SKIDMORE, OWINGS, & MERRILL	DESIGNER SOM	CHECKED BY G. Sakamoto 1/4/88	State of CALIFORNIA DEPARTMENT OF TRANSPORTATION	DIVISION OF STRUCTURES ARCHITECTURAL DESIGN	BRIDGE NO. 33M5765
	DRAWN BY CRAIG NAKAHARA	REVIEWED BY Charles Sahaw 8-19-86		PRODUCTION ARCHITECT C015241	POST MILE 2.0-2.1
	REVISED BY DOUG LOWE	STRUCTURAL REVIEW			

SFOBB TOLL PLAZA CANOPY

CANOPY SECTION

SHEET A10

OS D180 (Rev 5/85) 36241-500 5-85 500 OSP

ORIGINAL SCALE IN INCHES FOR REDUCED PLANS 0 1 2 3

CU 04334
WO 003131

Disregard prints bearing earlier revision dates

REVISION DATES (PRELIMINARY STAGE ONLY) 1/7/87 1/12/88

SHEET OF

DIST.	COUNTY	ROUTE	POST MILES—TOTAL PROJECT	SHEET NO.	TOTAL SHEETS
04	SF	80	2.0	12	68

SENIOR ARCHITECT David G. Stow C-8770 REGISTRATION NUMBER

DATE APPROVED 1-25-88

REGISTERED ARCHITECT D. G. STOW No. C-8770 Exp. 5-31-88 ARCHITECT STATE OF CALIFORNIA

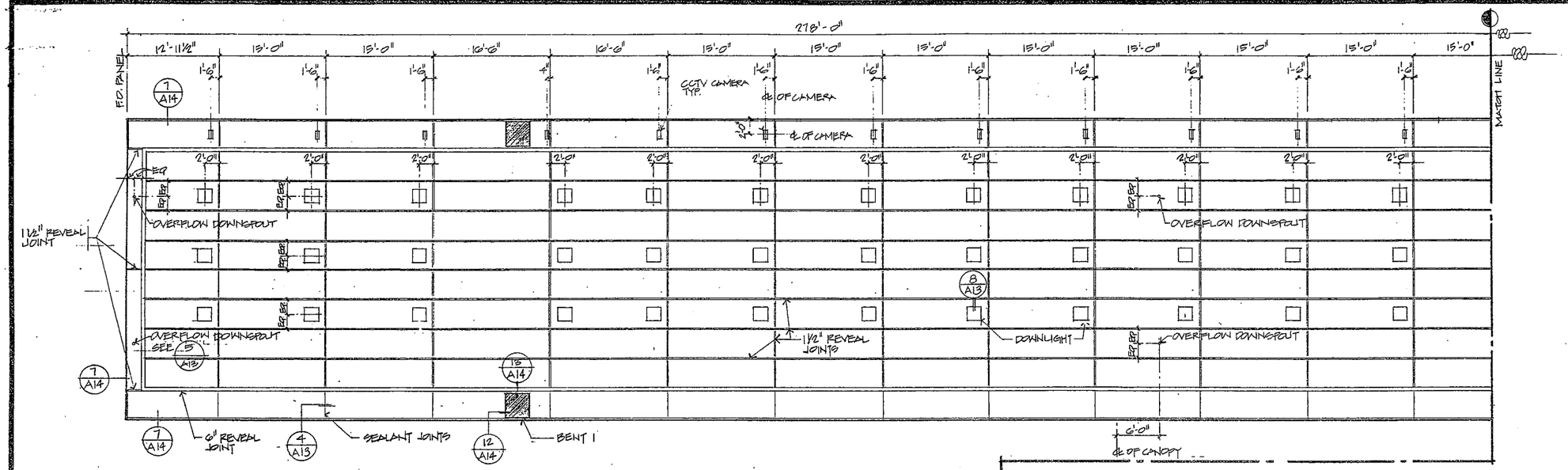

REDUCED PLAN
USE SCALE BELOW
0 2 3
3 INCHES ON ORIGINAL PLAN

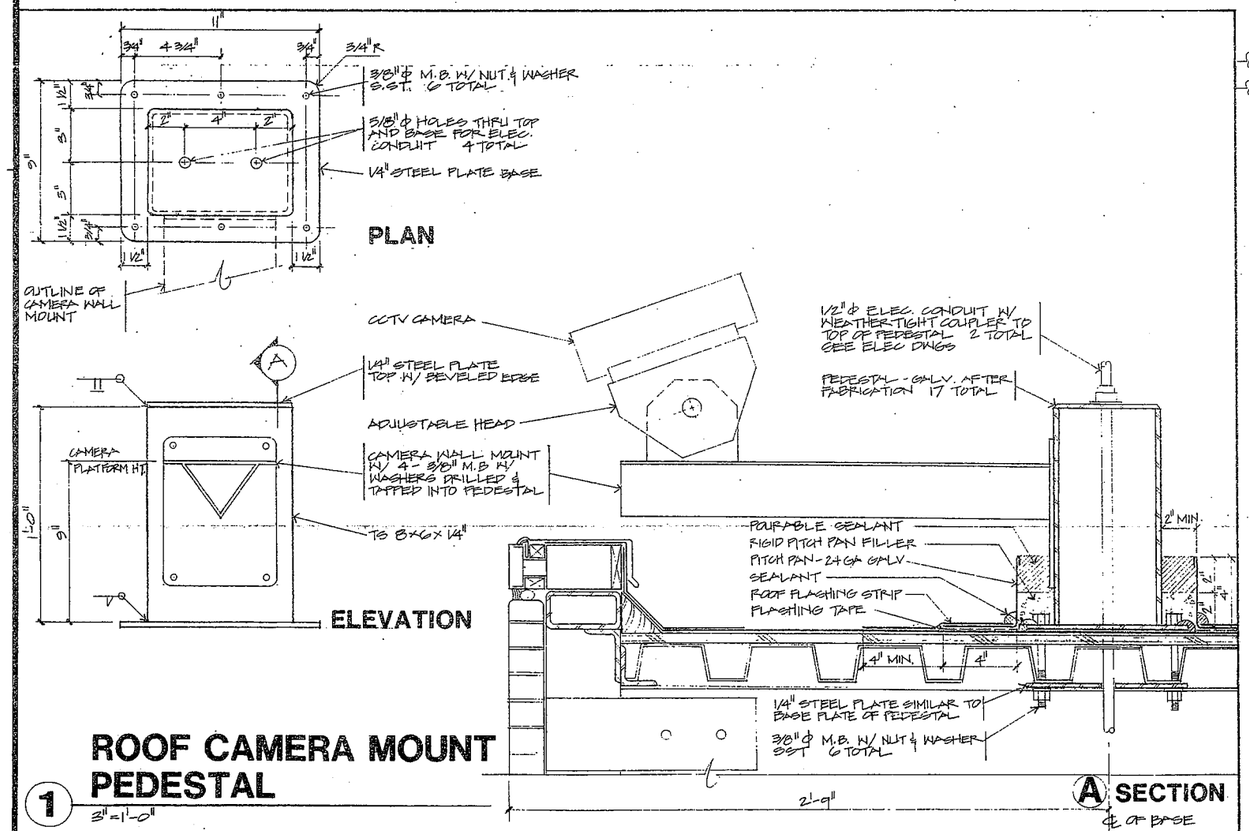

ROOF CAMERA MOUNT PEDESTAL

1 3" = 1'-0"

A SECTION

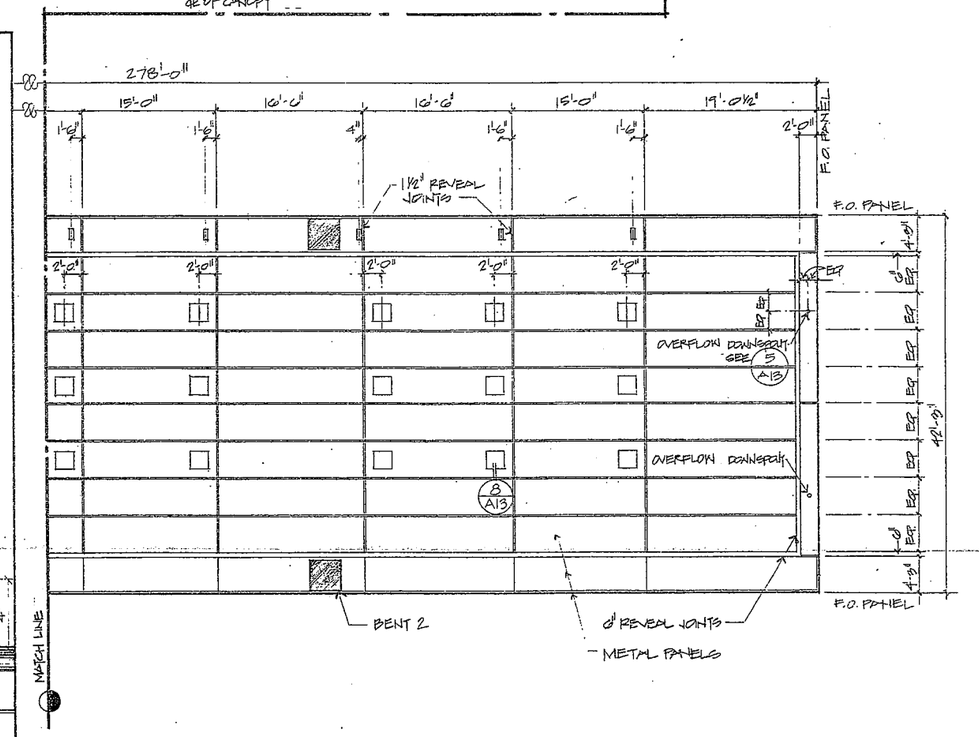

REFLECTIVE CANOPY SOFFIT PLAN

1/8" = 1'-0"

SCHEMATIC AND CONCEPTUAL DESIGN BY SKIDMORE, OWINGS, & MERRILL	DESIGNER GOM	CHECKED BY G. Okamii 1/4/88	State of CALIFORNIA DEPARTMENT OF TRANSPORTATION
	DRAWN BY CRAIG Y NAKAHARA, D LOWE	REVIEWED BY	DIVISION OF STRUCTURES ARCHITECTURAL DESIGN
	REVISED BY DOUG LOWE	STRUCTURAL REVIEW	PRODUCTION ARCHITECT C015341

BRIDGE NO.	POST MILE	SFOBB TOLL PLAZA CANOPY
33M 5785	2.0-2.1	REFLECTED CANOPY SOFFIT PLAN ROOF CAMERA MOUNT PEDESTAL

SHEET A11

CU 04334
WO 003181

Disregard prints bearing earlier revision dates

REVISION DATES (PRELIMINARY STAGE ONLY) 1/12/88

ORIGINAL SCALE IN INCHES FOR REDUCED PLANS 0 1 2 3

DS 0180 (Rev 5/85) 36241-500 5-85 50M DSP

DIST.	COUNTY	ROUTE	POST MILES—TOTAL PROJECT	SHEET No.	TOTAL SHEETS
04	MRN	580	2.0	13	68

SENIOR ARCHITECT David G. Stow REGISTRATION NUMBER C-8770

DATE APPROVED 1-25-88

REGISTERED ARCHITECT D. G. STOW No. C-8770 Exp. 5-31-89 ARCHITECT STATE OF CALIFORNIA

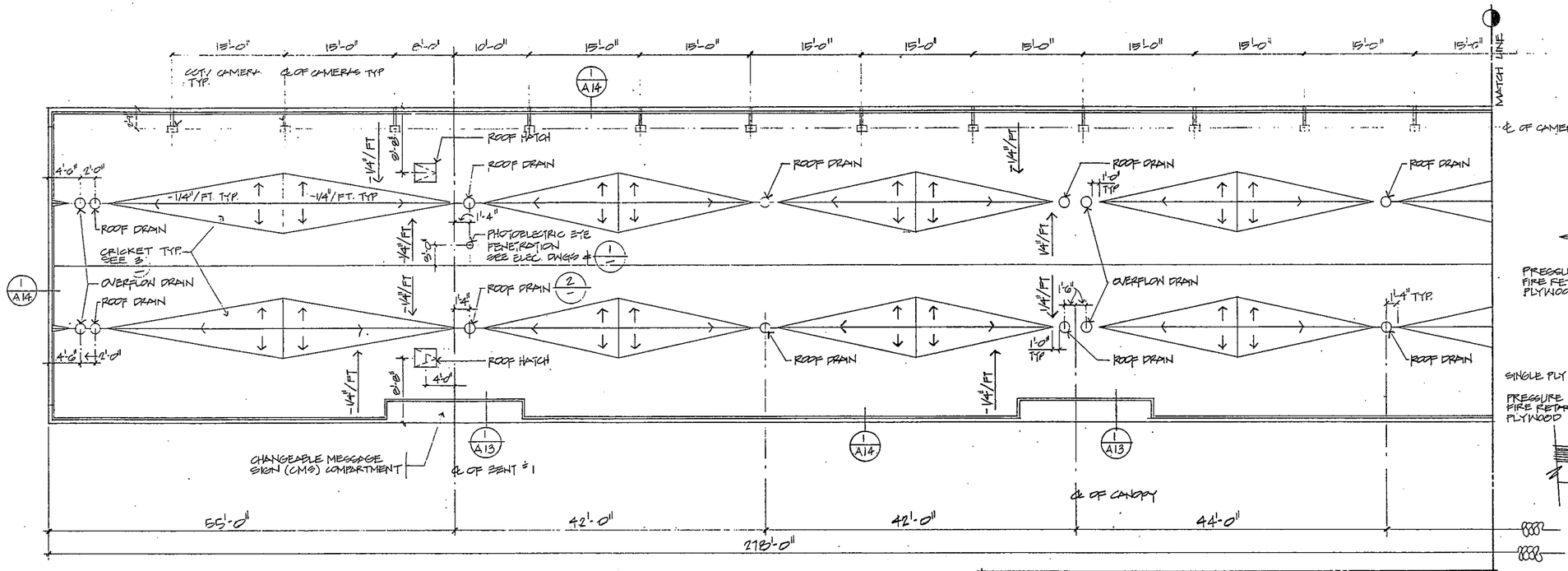

ROOF PLAN
1/8" = 1'-0"

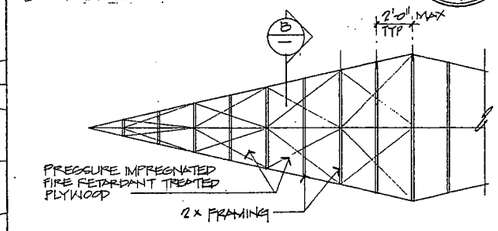

A PLAN
1/4" = 1'-0"

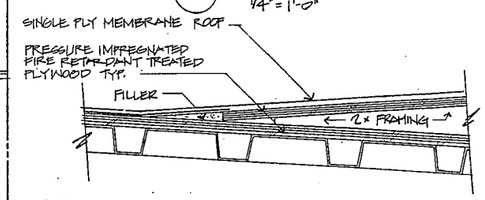

B SECTION
3" = 1'-0"

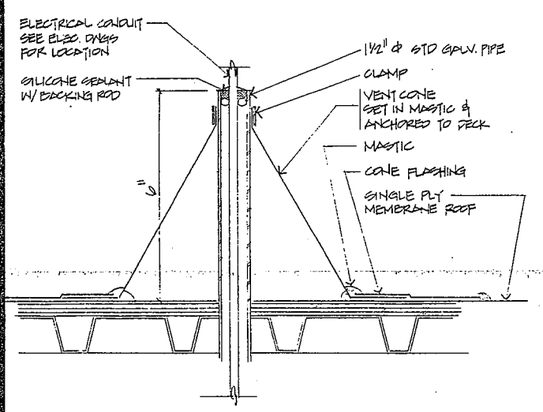

1 TYPICAL ROOF PENETRATION
3" = 1'-0"

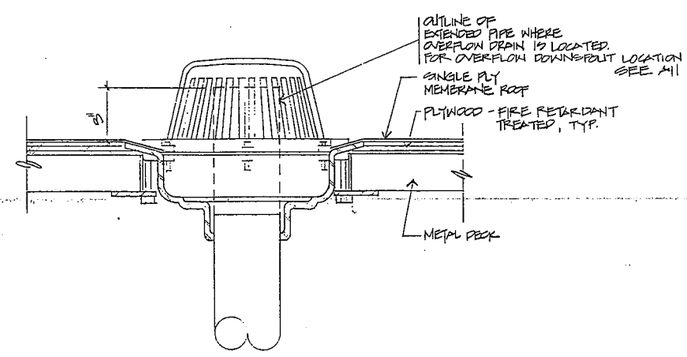

2 ROOF & OVERFLOW DRAIN
3" = 1'-0"

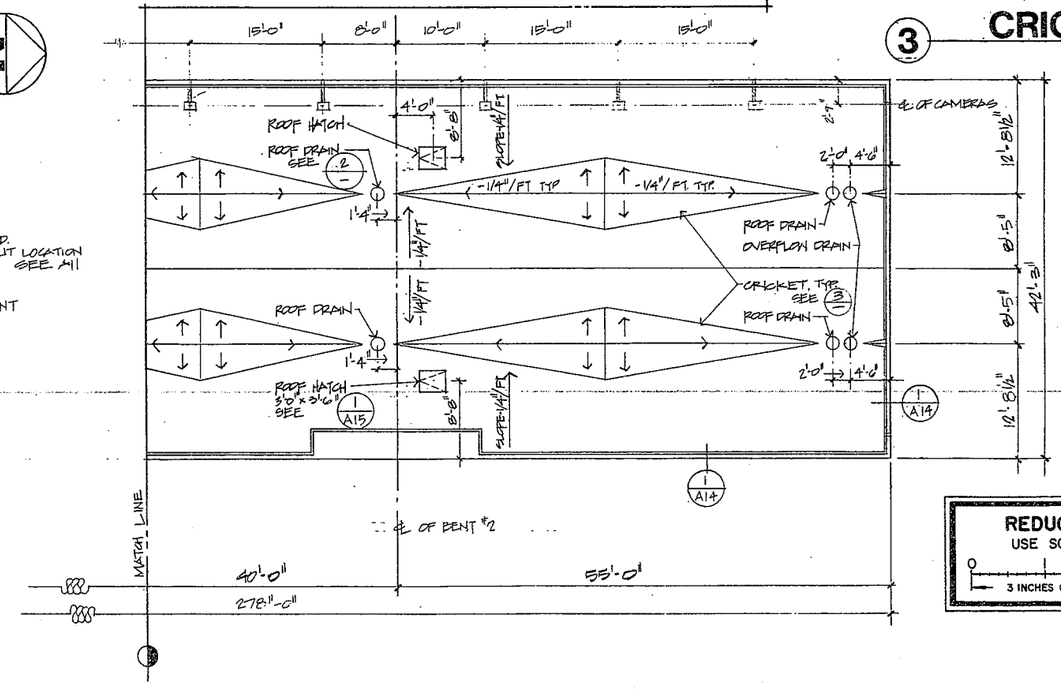

3 CRICKET

REDUCED PLAN
USE SCALE BELOW
0 1 2 3
3 INCHES ON ORIGINAL PLAN

13

SCHEMATIC AND CONCEPTUAL DESIGN BY SKIDMORE, OWINGS, & MERRILL	DESIGNER SOM	CHECKED BY 1/4/88	State of CALIFORNIA DEPARTMENT OF TRANSPORTATION	DIVISION OF STRUCTURES ARCHITECTURAL DESIGN	BRIDGE NO. 33M 5783	SFOBB TOLL PLAZA CANOPY
	DRAWN BY CRAIG Y. NAKAHARA	REVIEWED BY 8-19-86		PRODUCTION ARCHITECT 0015341	POST MILE 2.0-2.1	ROOF PLAN, ROOF DETAILS
	REVISED BY DOUG LOVE	STRUCTURAL REVIEW				

SHEET A12

DS 0180 (Rev 5/85) 36241-500 5-85 50M OSP

ORIGINAL SCALE IN INCHES FOR REDUCED PLANS 0 1 2 3

CU 04334
WO 003181

Disregard prints bearing earlier revision dates

REVISION DATES (PRELIMINARY STAGE ONLY) 1/4/88

SHEET OF

P.11

DIST.	COUNTY	ROUTE	POST MILES—TOTAL PROJECT	SHEET NO.	TOTAL SHEETS
04	Ala	80	0.0/2.0	14	68

SENIOR ARCHITECT: David G. Stow C-8770 REGISTRATION NUMBER

DATE APPROVED 1-25-88

REGISTERED ARCHITECT D. G. STOW No. C-8770 Exp. 6-30-89 ARCHITECT STATE OF CALIFORNIA

REDUCED PLAN
USE SCALE BELOW
0 2 3
3 INCHES ON ORIGINAL PLAN

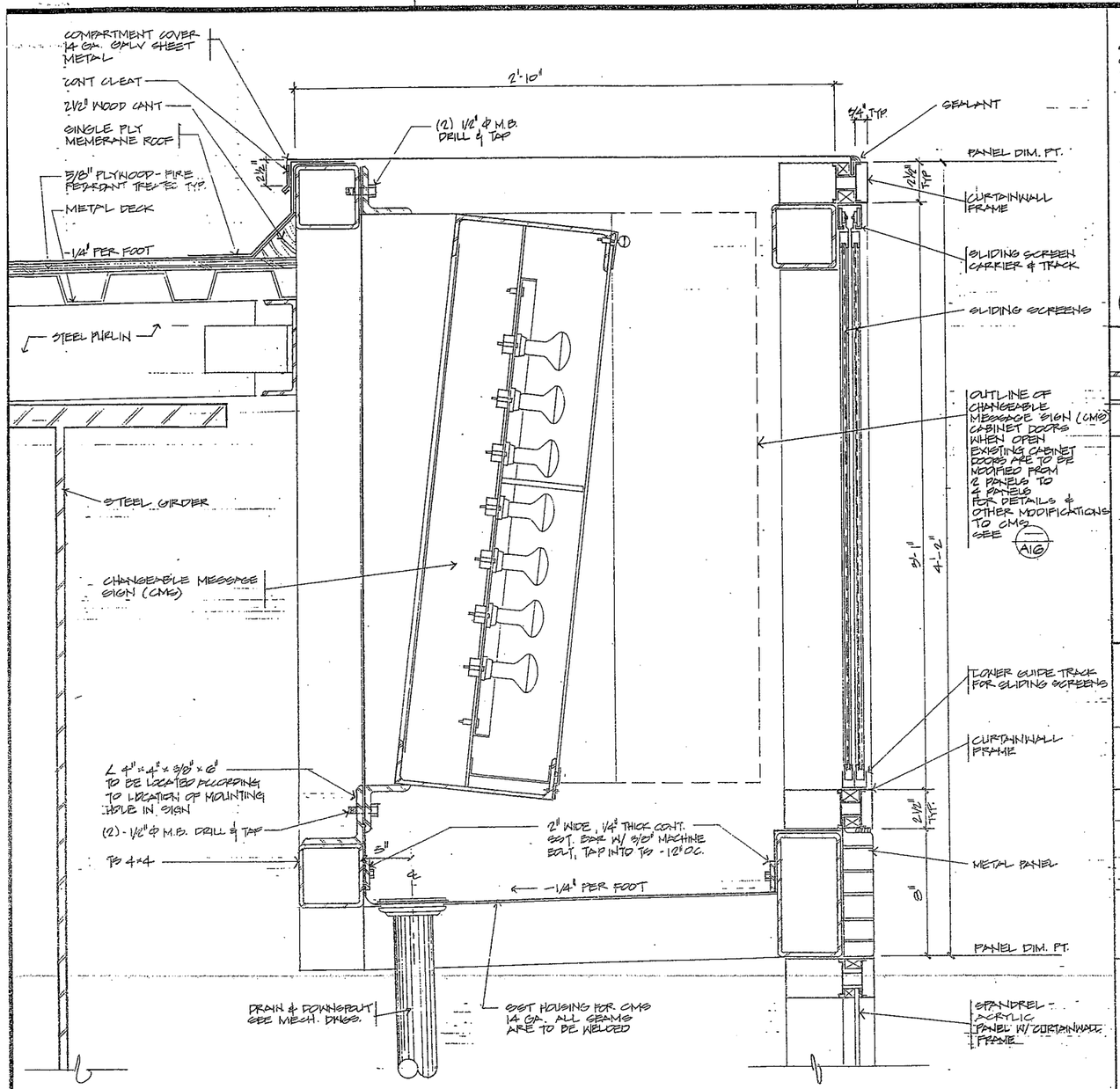

1 CHANGEABLE MESSAGE SIGN COMPARTMENT
3"=1'-0"

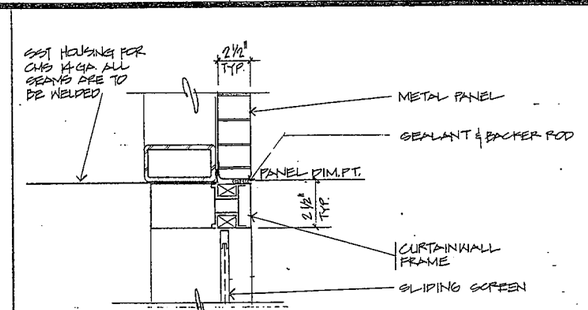

2 JAMB-CMS
3"=1'-0"

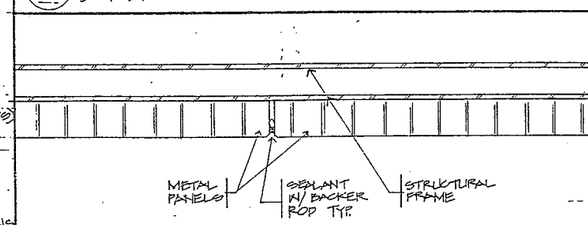

3 VERTICAL MINIMUM JOINT
3"=1'-0"

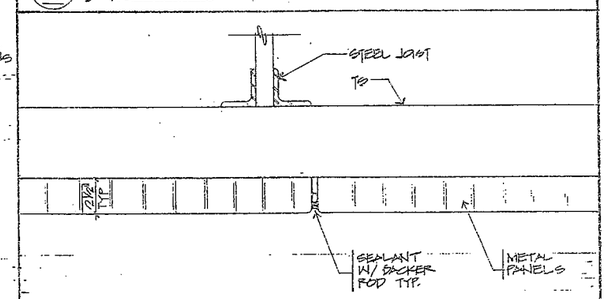

4 SOFFIT MINIMUM JOINT
3"=1'-0"

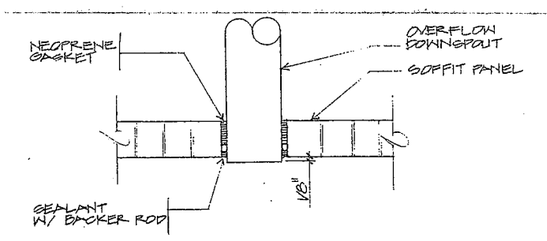

5 DOWNSPOUT PENETRATION
3"=1'-0"

6

7

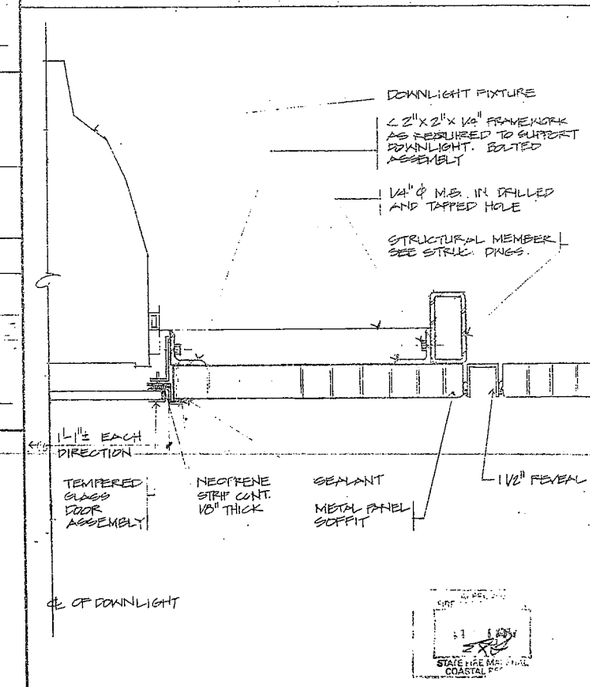

8 DOWNLIGHT SECTION
3"=1'-0"

STATE HPE MA... COASTAL ZONE

SCHEMATIC AND CONCEPTUAL DESIGN BY SKIDMORE, OWINGS, & MERRILL	DESIGNER SOM DRAWN BY CRAIG NAKAHARA, DOUG LOWE REVISED BY	CHECKED BY S. Okamu 1/4/88 REVIEWED BY [signature] 2-19-88 STRUCTURAL REVIEW	State of CALIFORNIA DEPARTMENT OF TRANSPORTATION	DIVISION OF STRUCTURES ARCHITECTURAL DESIGN [signature] C01534 PRODUCTION ARCHITECT	BRIDGE NO. 33M 5725 POST MILE 2.0-2.1	SFOBB TOLL PLAZA CANOPY DETAILS	SHEET A13

15,000 (Rev. 5/85) 36241-500 3-85 SOM OSP

ORIGINAL SCALE IN INCHES FOR REDUCED PLANS 0 1 2 3

CU 04 334
WO 003181

Disregard prints bearing earlier revision dates →

REVISION DATES (PRELIMINARY STAGE ONLY) 1/29/87 1/31/87

SHEET OF

DIST.	COUNTY	ROUTE	POST MILES—TOTAL PROJECT	SHEET NO.	TOTAL SHEETS
04	SFO	80	2.0	15	68

SENIOR ARCHITECT — REGISTRATION NUMBER C-8770

DATE APPROVED 1-25-88

REGISTERED ARCHITECT — D. G. STOW — No. C-8770 — Exp. 5-31-89 — ARCHITECT — STATE OF CALIFORNIA

REDUCED PLAN
USE SCALE BELOW
0 1 2 3
3 INCHES ON ORIGINAL PLAN

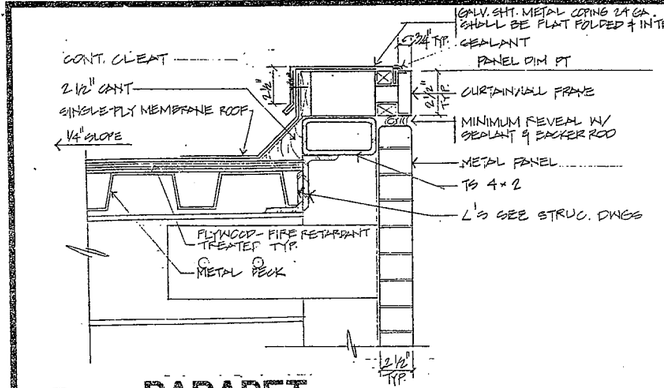

1 PARAPET
3" = 1'-0"

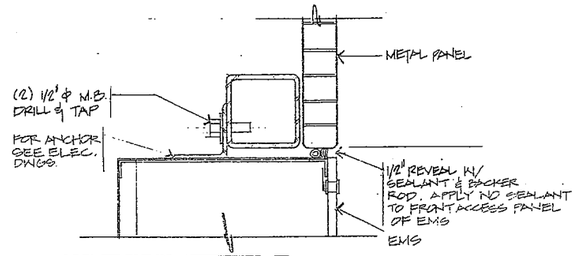

2 HEAD - EMS
3" = 1'-0"

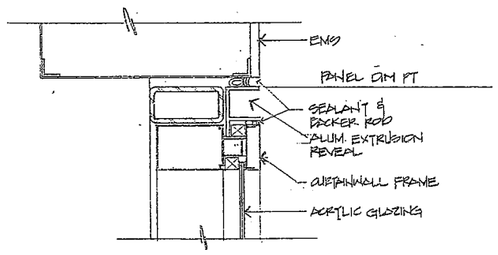

3 JAMB - EMS & SPANDREL
3" = 1'-0"

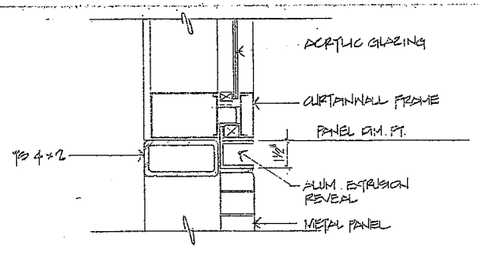

4 SILL - SPANDREL
3" = 1'-0"

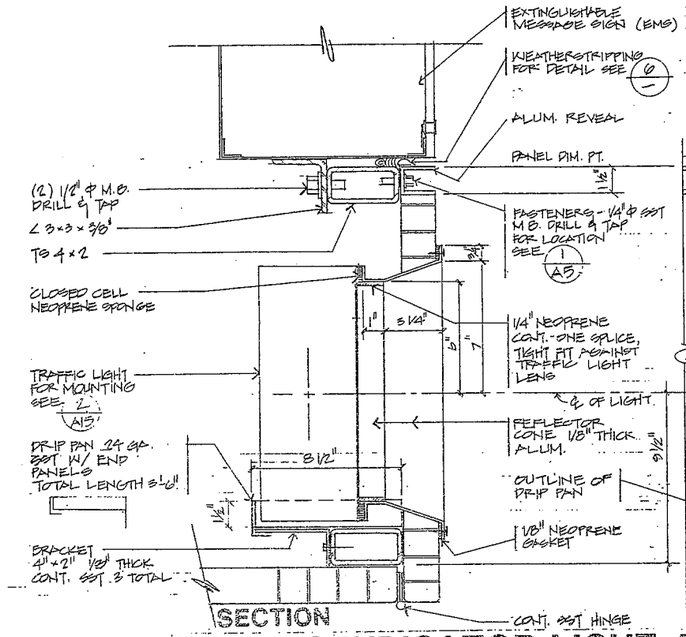

SECTION

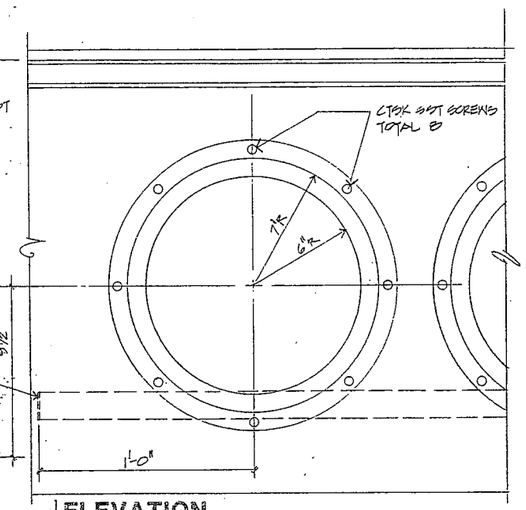

ELEVATION

5 TRAFFIC INDICATOR LIGHT ACCESS PANEL
3" = 1'-0"

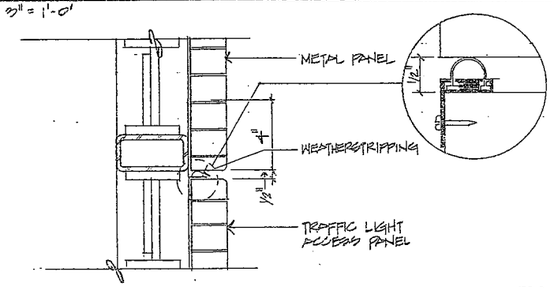

6 ACCESS PANEL JAMB
3" = 1'-0"

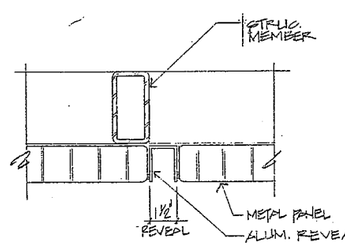

8 FASCIA & SOFFIT REVEAL
3" = 1'-0"

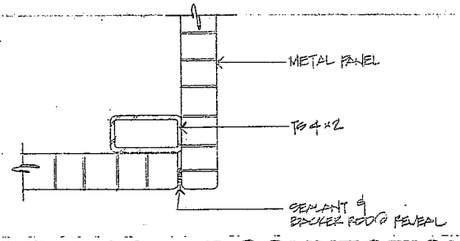

7 FASCIA-SOFFIT CONNECTION
3" = 1'-0"

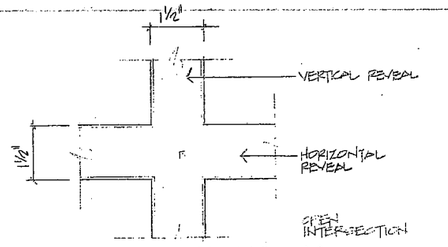

9 FASCIA & SOFFIT INTERSECTION
HALF SCALE ELEVATION

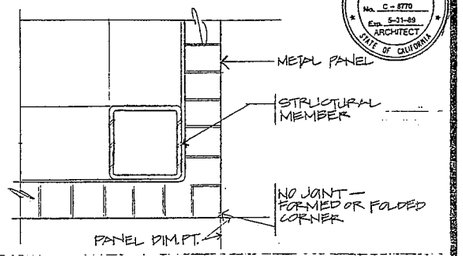

10 OUTSIDE FASCIA CORNER
3" = 1'-0"

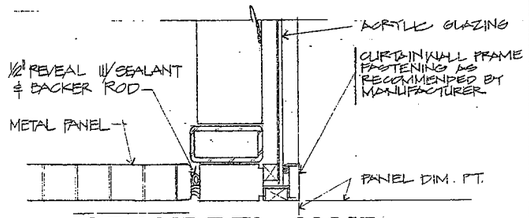

11 SPANDREL JAMB AT OUTSIDE CORNER
3" = 1'-0"

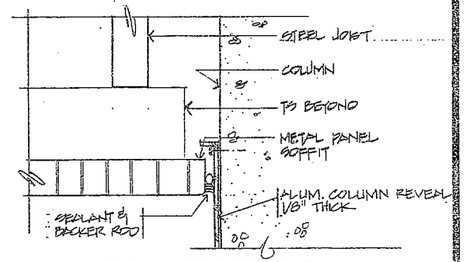

12 SOFFIT - COLUMN INTERSECTION

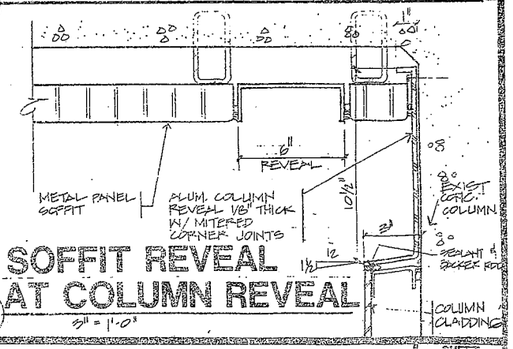

13 SOFFIT REVEAL AT COLUMN REVEAL
3" = 1'-0"

SCHEMATIC AND CONCEPTUAL DESIGN BY SKIDMORE, OWINGS, & MERRILL	DESIGNER OOM	CHECKED BY 1/9/88	State of CALIFORNIA DEPARTMENT OF TRANSPORTATION	DIVISION OF STRUCTURES ARCHITECTURAL DESIGN	BRIDGE NO. 33W135S
	DRAWN BY CRAIG NAKAHARA	REVIEWED BY		PRODUCTION ARCHITECT	POST MILE 2.0-2.1
	REVISED BY	STRUCTURAL REVIEW			

SFOBB TOLL PLAZA CANOPY
DETAILS

SHEET A14

DS 0180 (Rev 5/85) 35241-300 5-85 360 OSP

ORIGINAL SCALE IN INCHES FOR REDUCED PLANS 0 1 2 3

CU 04 334
WO 003181

Disregard prints bearing earlier revision dates

REVISION DATES (PRELIMINARY STAGE ONLY) 12/9/87 1/11/88

SHEET OF

DIST.	COUNTY	ROUTE	POST MILES—TOTAL PROJECT	SHEET NO.	TOTAL SHEETS
04	ALA	80	6.20	16	68

REGISTERED ARCHITECT D. G. STOW No. C-8770 Exp. 5-31-89 ARCHITECT STATE OF CALIFORNIA

SENIOR ARCHITECT David G. Stow C-8770 REGISTRATION NUMBER

DATE APPROVED 1-25-88

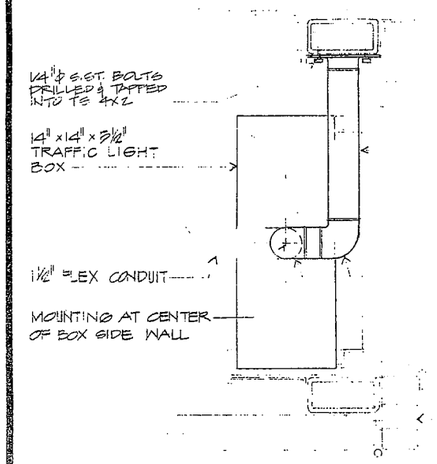

SIDE ELEVATION

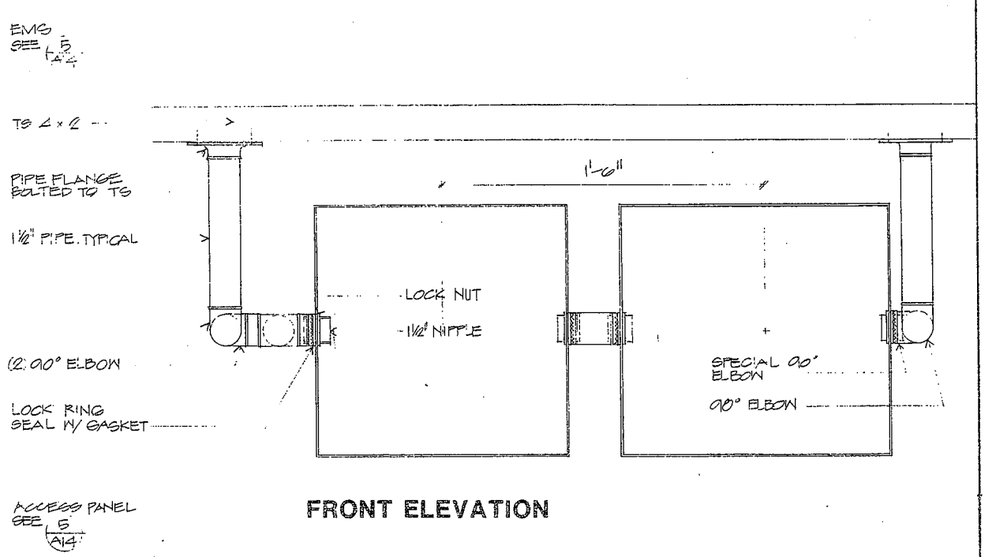

FRONT ELEVATION

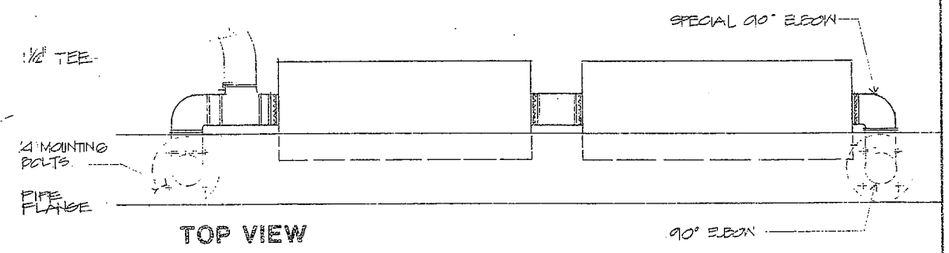

TOP VIEW

2 TRAFFIC LIGHT BOX MOUNTING DETAIL

3" = 1'-0"

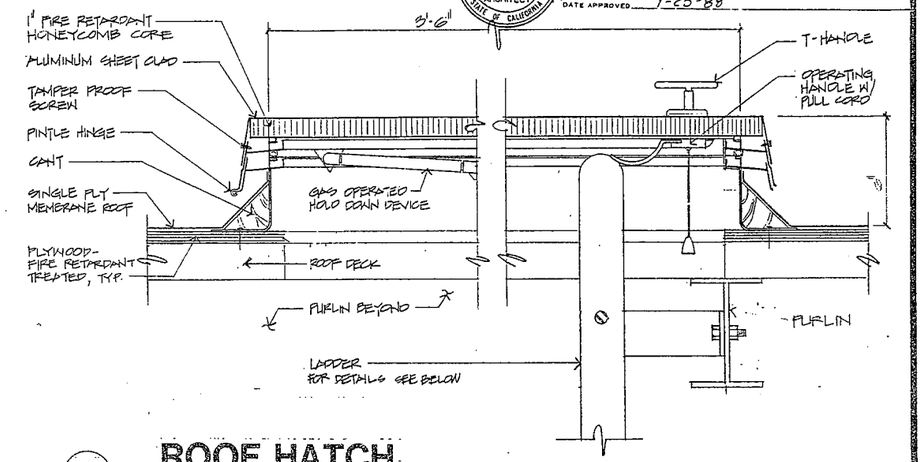

1 ROOF HATCH

3" = 1'-0"

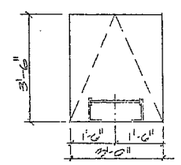

PLAN

1/2" = 1'-0"

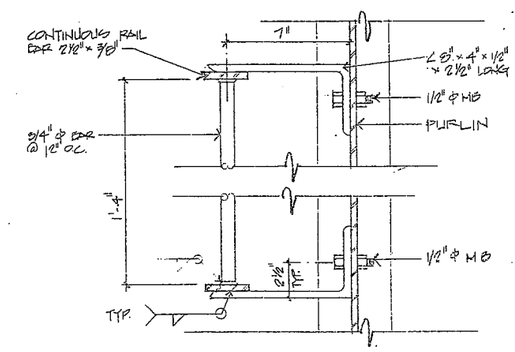

PLAN

3" = 1'-0"

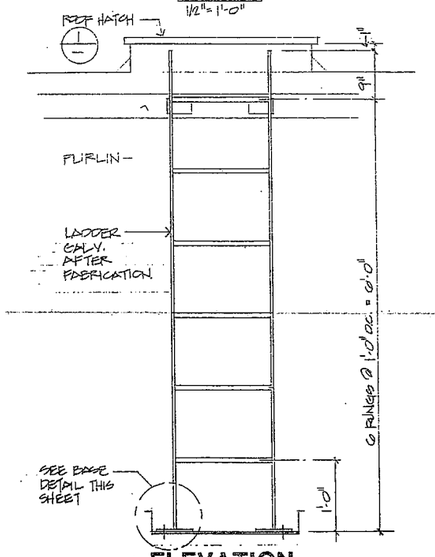

ELEVATION

1" = 1'-0"

LADDER

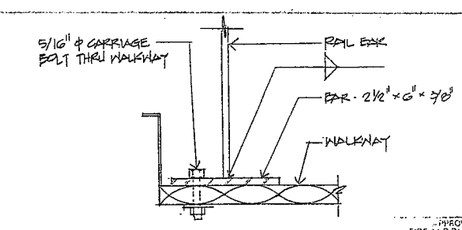

BASE

3" = 1'-0"

REDUCED PLAN
USE SCALE BELOW
0 2 3
3 INCHES ON ORIGINAL PLAN

SCHEMATIC AND CONCEPTUAL DESIGN BY SKIDMORE, OWINGS, & MERRILL	DESIGNER SOM	CHECKED BY 1/4/88	State of CALIFORNIA DEPARTMENT OF TRANSPORTATION	DIVISION OF STRUCTURES ARCHITECTURAL DESIGN	BRIDGE NO. 33 M 5705	SFOBB TOLL PLAZA CANOPY	SHEET A15
	DRAWN BY CRAIG NAKAHARA	REVIEWED BY 4-24-87		PRODUCTION ARCHITECT C015341	POST MILE 2.0-2.1	ROOF HATCH, LADDER, TRAFFIC LIGHT MOUNTING	
	REVISED BY	STRUCTURAL REVIEW					

DS 0180 (Rev 5/85) 36241-500 3-85 50M DSF

ORIGINAL SCALE IN INCHES FOR REDUCED PLANS 0 1 2 3

CU 04334
WO 003181

Disregard prints bearing earlier revision dates

REVISION DATES (PRELIMINARY STAGE ONLY) | SHEET | OF

DIST.	COUNTY	ROUTE	POST MILES—TOTAL PROJECT	SHEET NO.	TOTAL SHEETS
04	ALA	80	2.0	17	68

SENIOR ARCHITECT David G. Stow REGISTRATION NUMBER C-8770

DATE APPROVED 1-25-88

REGISTERED ARCHITECT D. G. STOW No. C-8770 Exp. 5-31-89 ARCHITECT STATE OF CALIFORNIA

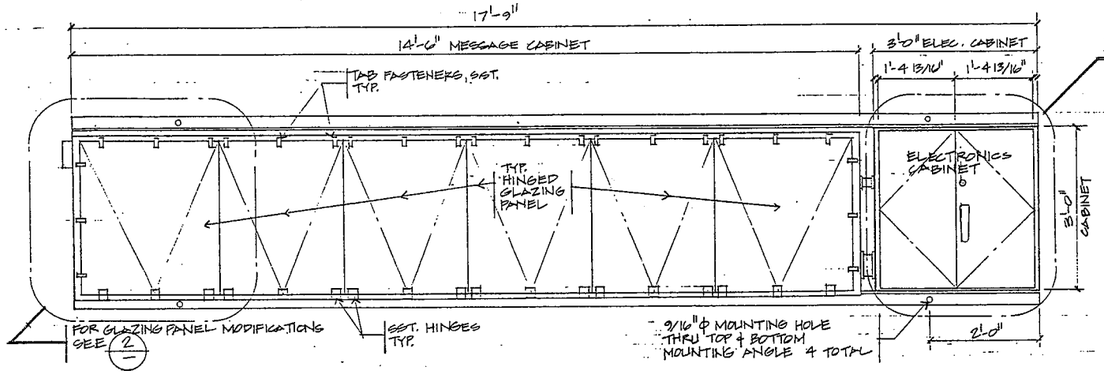

1 CHANGEABLE MESSAGE SIGN (STATE FURNISHED) - FRONT ELEVATION

3/4" = 1'-0"

REDUCED PLAN
USE SCALE BELOW
0 1 2 3
3 INCHES ON ORIGINAL PLAN

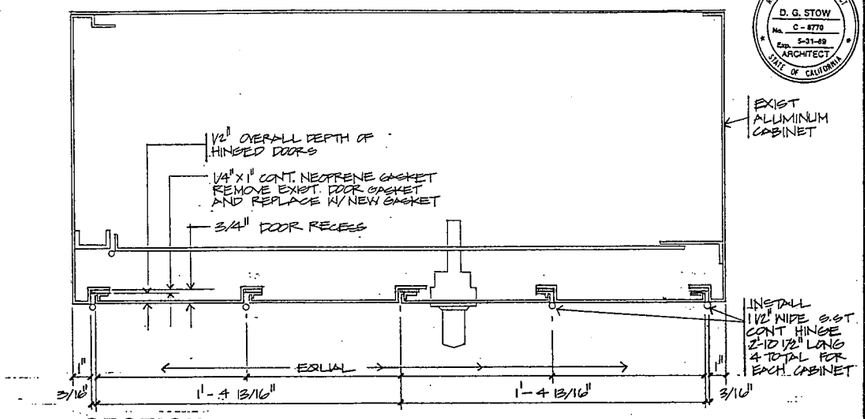

4 SECTION

3" = 1'-0"

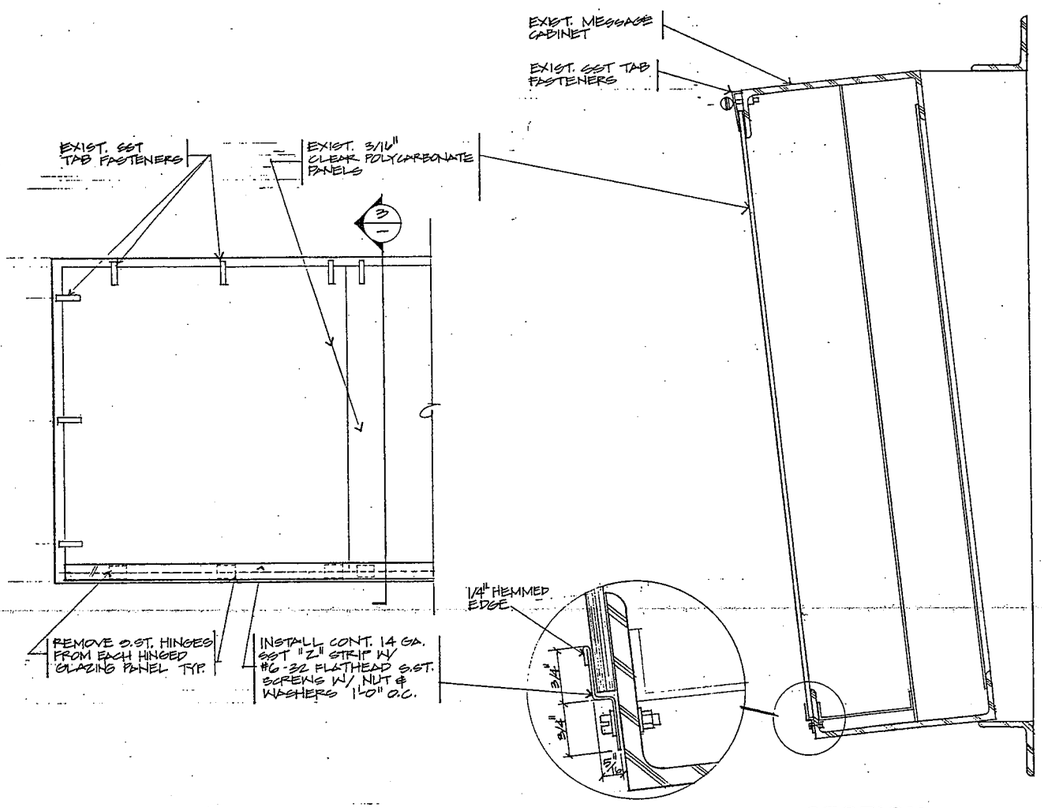

2 PARTIAL ELEVATION

1 1/2" = 1'-0"

3 SECTION

3" = 1'-0"

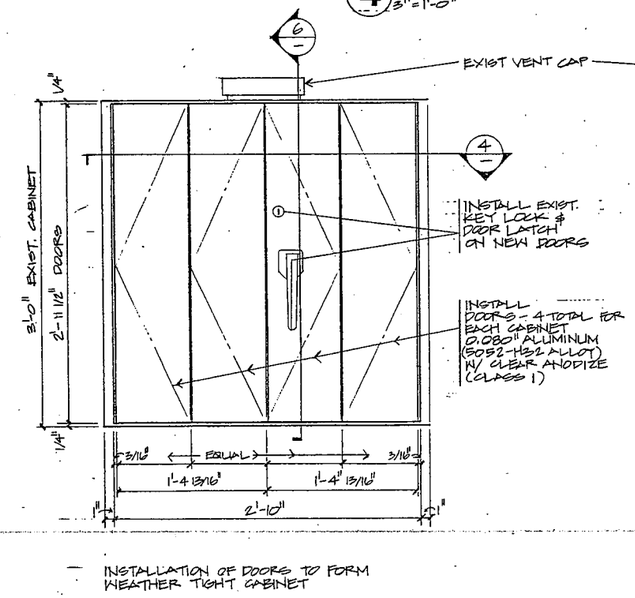

INSTALLATION OF DOORS TO FORM WEATHER TIGHT CABINET

5 ELEVATION

1 1/2" = 1'-0"

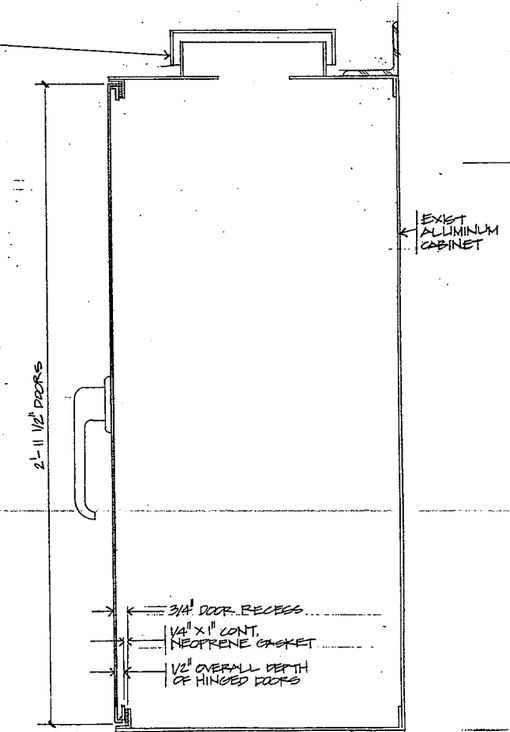

6 SECTION

3" = 1'-0"

APPROVED AS TO PLAN
STATE FIRE MARSHAL COASTAL REG.

GLAZING PANEL MODIFICATION

ELECTRONIC CABINET DOOR MODIFICATION

SCHEMATIC AND CONCEPTUAL DESIGN BY
SKIDMORE, OWINGS, & MERRILL

DESIGNER	SOM	CHECKED BY	J. Spanic 1/4/88
DRAWN BY	DOUG LOWE	REVIEWED BY	
REVISED BY		STRUCTURAL REVIEW	

State of CALIFORNIA DEPARTMENT OF TRANSPORTATION

DIVISION OF STRUCTURES ARCHITECTURAL DESIGN
PRODUCTION ARCHITECT

BRIDGE NO. 33M 5785
POST MILE 2.0 - 2.1

SFOBB TOLL PLAZA CANOPY
CHANGEABLE MESSAGE SIGN MODIFICATION

SHEET A16

CU 04334
WO 003181

ORIGINAL SCALE IN INCHES FOR REDUCED PLANS 0 1 2 3

Disregard prints bearing earlier revision dates

REVISION DATES (PRELIMINARY STAGE ONLY)

SHEET OF

DS 0180 (Rev 5/85) 36241-500 5-85 SGN DEP

7

DIST.	COUNTY	ROUTE	POST MILES TOTAL PROJECT	SHEET NO.	TOTAL SHEETS
04	Ala	80	2.0	18	68

E F Graham
REGISTERED CIVIL ENGINEER

1-25-88
PLANS APPROVAL DATE

REGISTERED PROFESSIONAL ENGINEER
E.F. Graham
No. 8935
Exp. 12-31-88
CIVIL
STATE OF CALIFORNIA

NOTES:

1. For traffic control upstream, See Standard Plans T-10 and Special Provisions.
2. For disposition of existing signs in the assembly site area, See Special Provisions.

REDUCED PLAN
USE SCALE BELOW
0 1 2 3
3 INCHES ON ORIGINAL PLAN

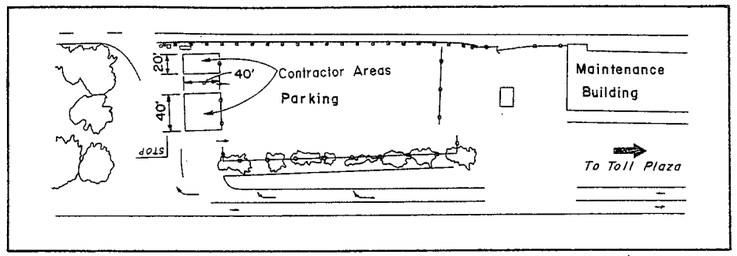

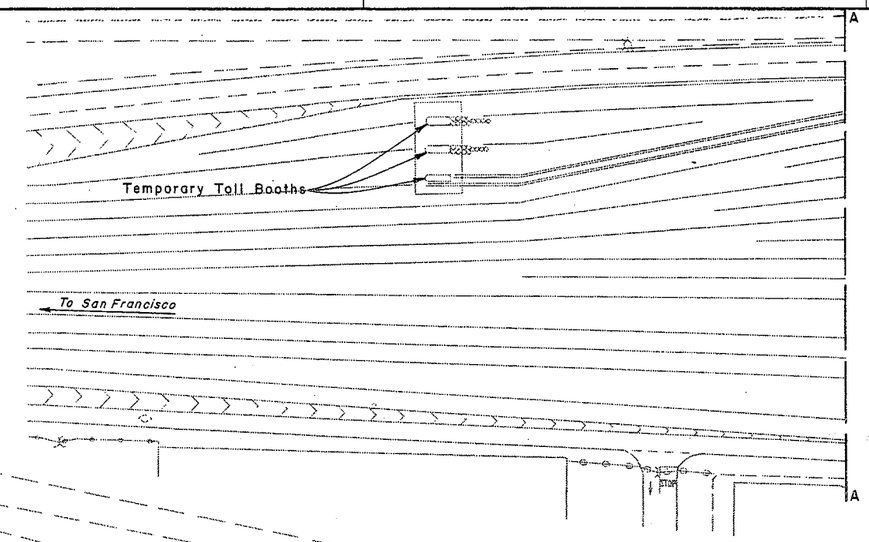

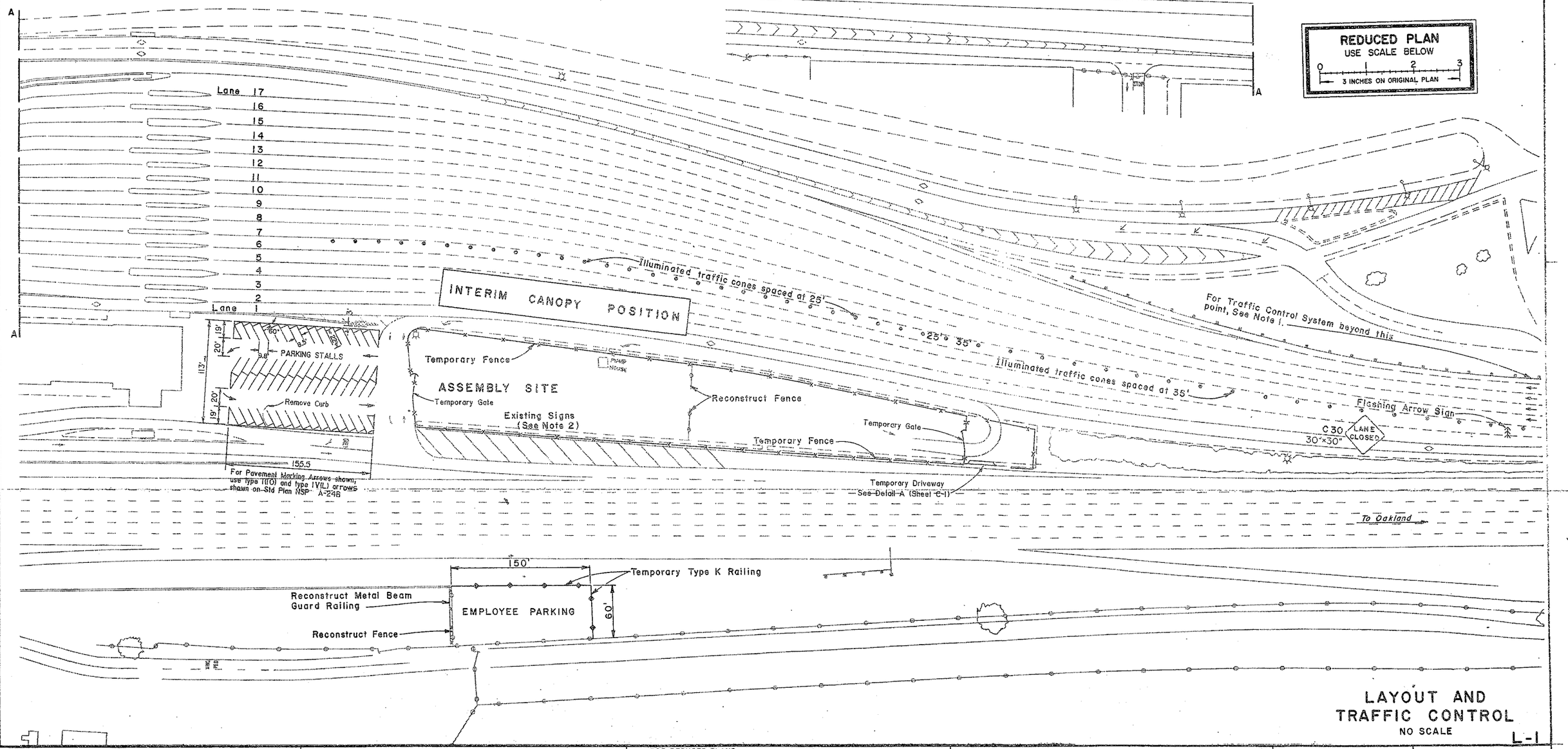

LAYOUT AND
TRAFFIC CONTROL
NO SCALE

L-1

REVISED BY | DATE REVISED
DESIGNED BY | CHECKED BY
E. Jeong

STATE OF CALIFORNIA - DEPARTMENT OF TRANSPORTATION

Caltrans

FOR REDUCED PLANS
ORIGINAL SCALE IS IN INCHES 0 1 2 3

CU 04334

EA 003181

RN 05-05-32-PF (REV. 1/88)

DIST.	COUNTY	ROUTE	POST MILES TOTAL PROJECT	SHEET NO.	TOTAL SHEETS
04	Ala	80	2.0	19	68

E. F. Graham
REGISTERED CIVIL ENGINEER

1-25-88
PLANS APPROVAL DATE

REGISTERED PROFESSIONAL ENGINEER
E.F. Graham
No. 8935
Exp. 12-31-88
CIVIL
STATE OF CALIFORNIA

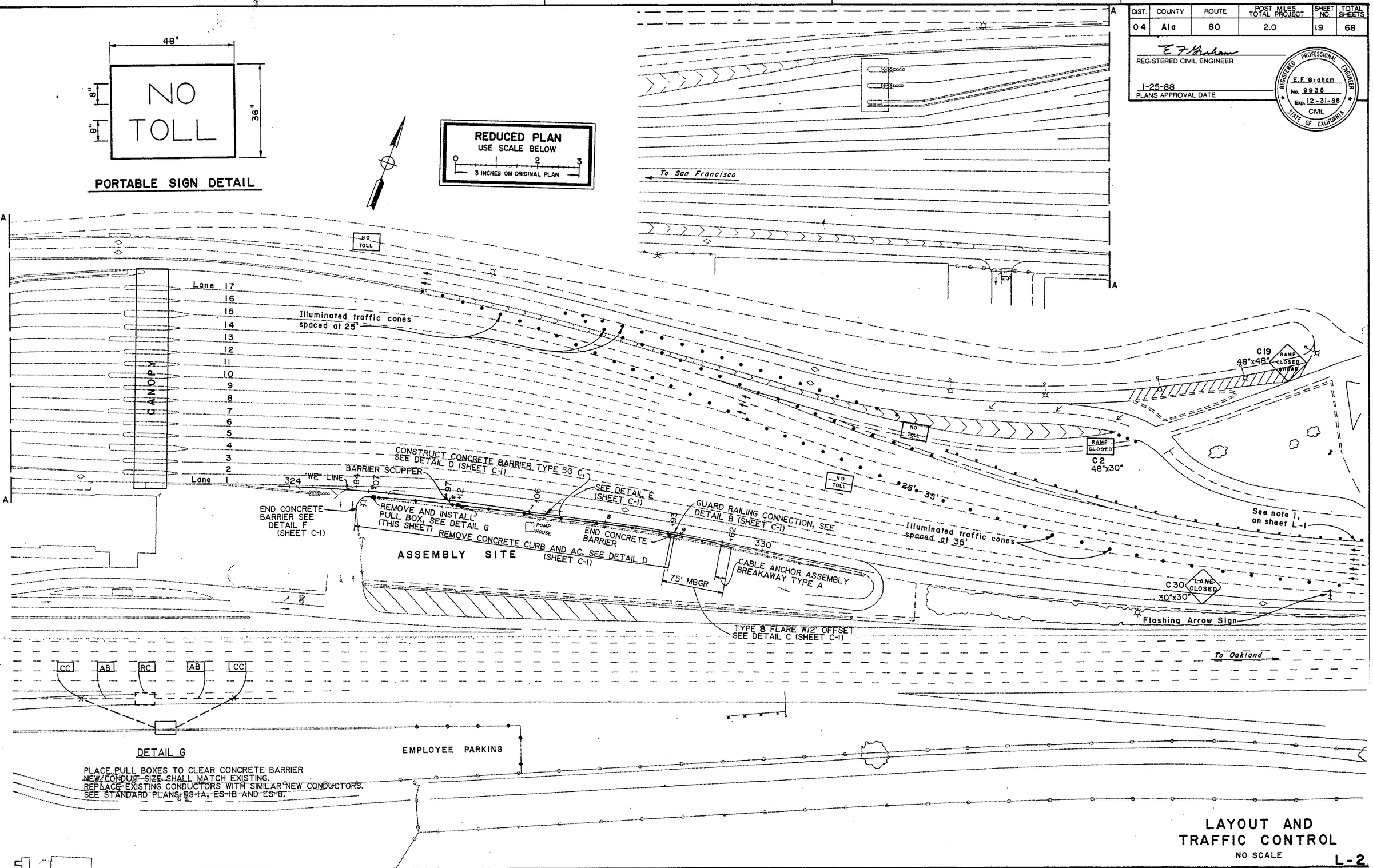

LAYOUT AND TRAFFIC CONTROL
NO SCALE

L-2

DATE	REVISED BY	DATE REVISED

CALCULATED/ DESIGNED BY	CHECKED BY

PROJECT ENGINEER
E. Jeong

STATE OF CALIFORNIA - DEPARTMENT OF TRANSPORTATION
Caltrans

FOR REDUCED PLANS ORIGINAL SCALE IS IN INCHES 0 1 2 3

CU04334

EA 003181

FORM DC-OE-92-PF (REV. 1/86)

19

DIST	COUNTY	ROUTE	POST MILES TOTAL PROJECT	SHEET NO.	TOTAL SHEETS
04	Ala	80	2.0	20	68

E. F. Graham
REGISTERED CIVIL ENGINEER

1-25-88
PLANS APPROVAL DATE

REGISTERED PROFESSIONAL ENGINEER E. F. GRAHAM No. 8935 Exp. 12/31/88 CIVIL STATE OF CALIFORNIA

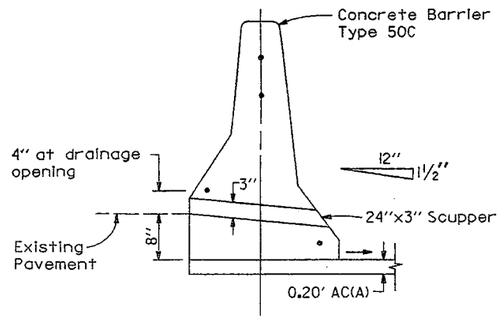

DETAIL E
WE 325+97
WE 327+06

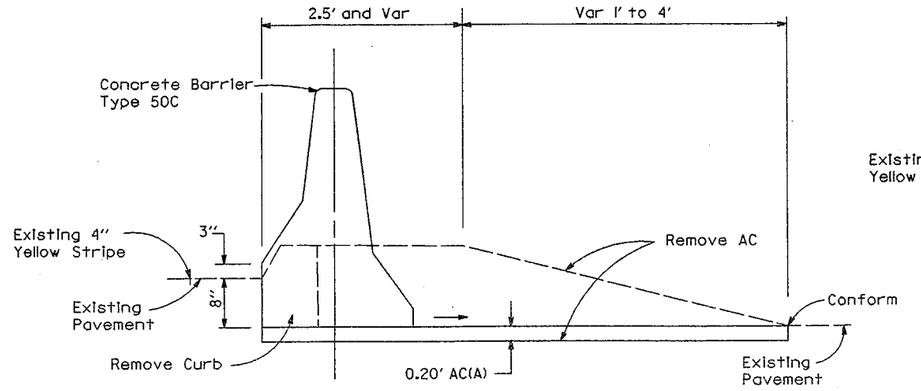

DETAIL D

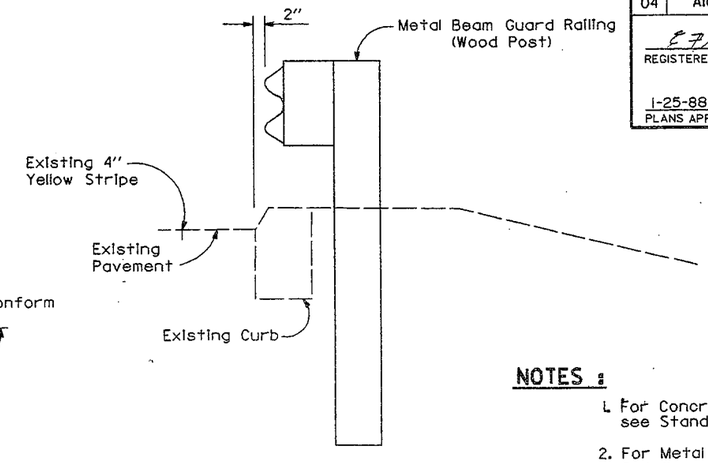

DETAIL C

NOTES :

1. For Concrete Barrier Details not shown, see Standard Plan A75-A .
2. For Metal Beam Guard Railing Installation Details not shown, see Standard Plans A77C-1, A77C-2, A77-E, A79-A, A79-B, A79-C and A81.
3. Shape Driveway Curve Return to conform .

REDUCED PLAN
USE SCALE BELOW
0 1 2 3
3 INCHES ON ORIGINAL PLAN

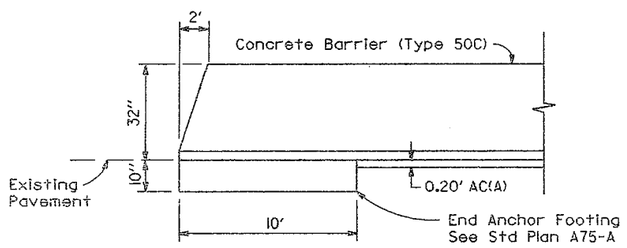

ELEVATION

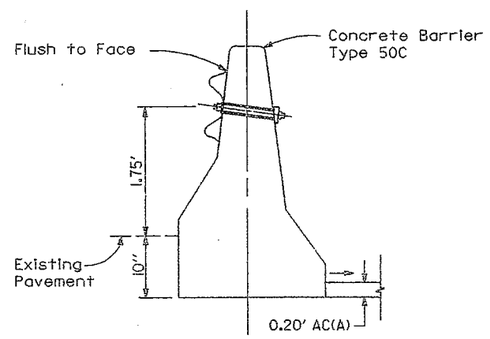

SECTION B - B

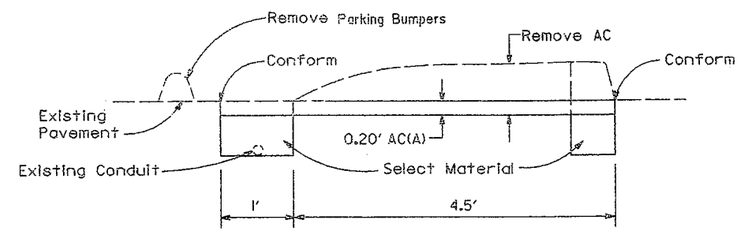

SECTION A - A

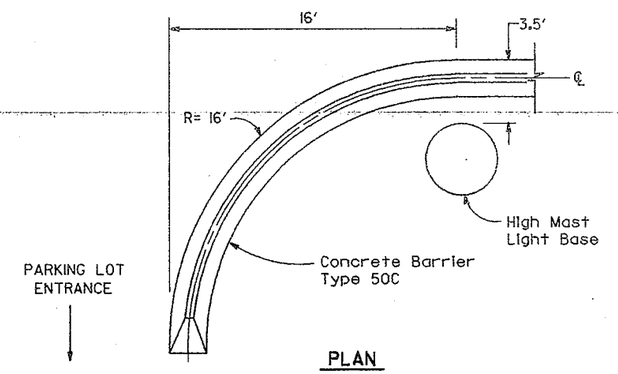

PLAN
DETAIL F
CONCRETE BARRIER TRANSITION

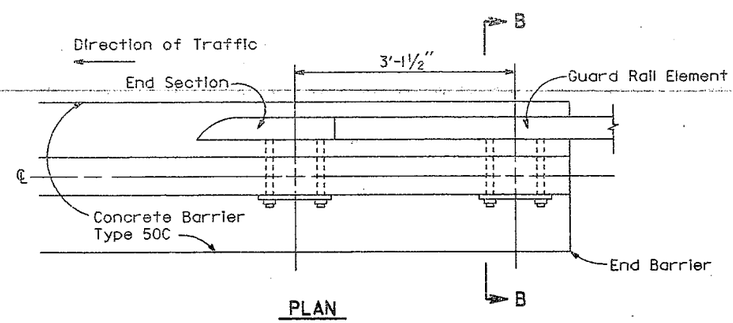

PLAN
DETAIL B
GUARD RAILING CONNECTION

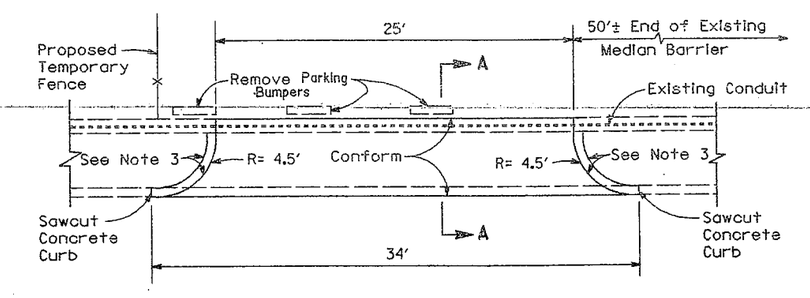

PLAN
DETAIL A
TEMPORARY DRIVEWAY

CONSTRUCTION DETAILS
NO SCALE

C-1

DATE REVISED
CHECKED BY
L. Jeong

-DE-92-PF (REV. 1/86)

FOR REDUCED PLANS ORIGINAL SCALE IS IN INCHES 0 1 2 3

CU 04334
EA 003181

ZFA2:(33):2014003181C01.DGN;1

DIST.	COUNTY	ROUTE	POST MILES TOTAL PROJECT	SHEET NO.	TOTAL SHEETS
04	Ala	80	2.0	21	68

To accompany plans dated 1-25-88

REDUCED PLAN
USE SCALE BELOW
0 1 2 3
3 INCHES ON ORIGINAL PLAN

CHIEF, OFFICE OF PROJECT PLANNING AND DESIGN
REGISTERED CIVIL ENGINEER

3-18-86
PLANS APPROVAL DATE

REGISTERED PROFESSIONAL ENGINEER
A.J. PHILLIPS
No. 13046
Exp. 3-31-89
CIVIL
STATE OF CALIFORNIA

A

AB	aggregate base
ABBC	asbestos bonded bituminous coated
ABM	air-blown mortar
Abn	abandon
Abut	abutment
AC	asphalt concrete
AFES	alternative flared end section
Ahd	ahead
Adj	adjust
Alt	alternate
AP	alternative pipe
APC	alternative pipe culvert
AS	aggregate subbase
Assy	assembly
ATPB	asphalt treated permeable base
ATPM	asphalt treated permeable material
Ave	avenue

B

BB	beginning of bridge
BC	begin horizontal curve
BCR	begin curb return
Beg	begin
Bit Ctd	bituminous coated
Bk	back
Bkf	backfill
Bldg	building
Blvd	boulevard
BM	bench mark
Br	bridge
BVC	begin vertical curve
BW	barbed wire

C

CAA	cable anchor assembly
CAP	corrugated aluminum pipe
CAPA	corrugated aluminum pipe arch
CAS	construction area sign
C–C	center to center
CF	cubic foot
Chnl	channel
CIDH	cast-in-drilled-hole
CIP	cast iron pipe
CIPCP	cast-in-place concrete pipe
℄	center line
CL	chain link
Cl	class
Clr	clear, clearance
Co	county
Col	column
Conc	concrete
Cond	conduit
Conn	connector
Const	construct(ion)
Coord	coordinate
Cr	creek
CRSP	concreted rock slope protection
CSP	corrugated steel pipe
CSPA	corrugated steel pipe arch
CTB	cement treated base
CTPB	cement treated permeable base
CTPM	cement treated permeable material
Culv	culvert
CY	cubic yard

D

Dbl	double
DD	downdrain
Del	delineators
Det	detour or detail
DI	drainage inlet
Dia	diameter
Dist	distance
DMBB	double metal beam barrier
Dr	drive
Dwy	driveway

E

EA	each
Ease	easement
EB	end of bridge or eastbound
EC	end horizontal curve
ECR	end curb return
ED	edge drain
EDC	edge drain cleanout
EDO	edge drain outlet
EDV	edge drain vent
Elev	elevation
Emb	embankment
EP	edge of pavement
Eq	equation
ES	edge of shoulder
ETW	edge of traveled way
EVC	end vertical curve
EW	endwall
Exc	excavation
Exist	existing
Exp	expressway
Exp Jt	expansion joint

F

F & C	frame and cover
Fdn	foundation
FES	flared end section
FF	filter fabric
F & G	frame and grate
FG	finished grade
FH	fire hydrant
FL	flow line
Fr Rd	frontage road
Ft	foot or feet
Ftg	footing
Fwy	freeway

G

Ga	gage
GAL	gallon
GM	guide marker
GR	guard railing
GSP	galvanized steel pipe

H

H	height
HD	horizontal drain
Horiz	horizontal
HP	hinge point or horse power
HW	headwall
Hwy	highway

I

IB	imported borrow
ID	inside diameter
Inv	invert
Irr	irrigation

J

JP	joint pole
JS	junction structure
Jt	joint

L

L	length
LB	pound
LCB	lean concrete base
LF	linear foot
Loc	location
LOL	layout line
Ln	lane
LS	lump sum
Lt	left

M

Max	maximum
MB	metal beam
MBB	metal beam barrier
MBGR	metal beam guard railing
Med	median
MH	manhole
MI	mile(s)
Mkr	marker
MFBM	thousand foot board measure
Min	minimum
Misc. I & S	miscellaneous iron and steel
Misc	miscellaneous
Mod	modified or modify
Mon	monument
MP	metal plate
MPGR	metal plate guard railing
MR	movement rating
Mtl	material

N

NB	northbound
No	number

O

Oblr	obliterate
OC	overcrossing
OD	outside diameter
OG	original ground
OGAC	open graded asphalt concrete
OH	overhead

P

PAP	perforated aluminum pipe
PB	pull box
PCC	point of compound curve or Portland cement concrete
PCP	perforated concrete pipe
PCVC	point of compound vertical curve
Ped	pedestrian
Ped OC	pedestrian overcrossing
Ped UC	pedestrian undercrossing
Perm Mtl	permeable material
PG	profile grade
PI	point of intersection
PL, P/L	property line
PL	plate
PM	post mile
PN	paving notch
POC	point on horizontal curve
POT	point on tangent
POVC	point on vertical curve
PP	power pole
PPP	perforated plastic pipe
PPL	preformed permeable liner
PRC	point of reverse curve
PRF	pavement reinforcing fabric
PRVC	point of reverse vertical curve
PSP	perforated steel pipe
PVC	polyvinyl chloride
Pvmt	pavement

R

R	radius
RCA	reinforced concrete arch
RCB	reinforced concrete box
RCP	reinforced concrete pipe
RCPA	reinforced concrete pipe arch
R & D	remove and dispose
Rd	road
Reinf	reinforced or reinforcing
Rel	relocate
Ret	retaining
RM	road-mixed
RP	reference point
RR	railroad
R &S	remove and salvage
RSP	rock slope protection
Rt	right
Rte	route
RW	retaining wall
R/W	right of way

S

SAE	structure approach embankment
Salv	salvage
SAPP	structural aluminum plate pipe
SB	southbound
SC	sand cushion
℄	station line
SCSP	slotted corrugated steel pipe or sacked concrete slope protection
SD	storm drain
	structural section drain
	subgrade drain
Sec	section
Sep	separation
SG	subgrade
Shld	shoulder
Sht	sheet
SM	selected material
Spec	special
SPP	slotted plastic pipe
SQFT	square foot
SQYD	square yard
SS	slope stake
SSPA	structural steel plate arch
SSPP	structural steel plate pipe
SSPPA	structural steel plate pipe arch
St	street
STA, Sta	station
Std	standard
Str	structure
Surf	surfacing
SW	sidewalk or sound wall
Swr	sewer

T

T	semi-tangent
TAB	tablet
TBB	thrie beam barrier
Tbr	timber
TC	top of curb
TCB	traffic control box
Temp	temporary
TG	top of grate
TP	telephone pole
TPB	treated permeable base
TPM	treated permeable material
Trans	transition
TS	traffic signal
Typ	typical
Typ Sec	typical section

U

UC	undercrossing
UD	underdrain
UP	underpass

V

V	design speed, valve
Var	variable
VC	vertical curve
VCP	vitrified clay pipe
Vert	vertical
Via	viaduct

W

WB	westbound
WH	weep hole
WM	wire mesh
WSP	welded steel pipe
WV	water valve
WW	wing wall

X

Xing	crossing
X Sec	cross section

REVISED STANDARD PLAN
RSP A–10A and RSP A–10B supersede Standard Plan A–10 dated July 1, 1984, on page 1 of the Standard Plans book dated July 1984.

STATE OF CALIFORNIA
DEPARTMENT OF TRANSPORTATION

ABBREVIATIONS

RSP A–10A

21

FOR REDUCED PLANS ORIGINAL SCALE IS IN INCHES 0 1 2 3

C-CB-P2-PF (REV. 11/78)

DIST.	COUNTY	ROUTE	POST MILES TOTAL PROJECT	SHEET NO.	TOTAL SHEETS
04	Ala	80	2.0	22	68

To accompany plans dated 1-25-88

CHIEF, OFFICE OF PROJECT PLANNING AND DESIGN
REGISTERED CIVIL ENGINEER

3-18-86
PLANS APPROVAL DATE

REGISTERED PROFESSIONAL ENGINEER — A. J. PHILLIPS — No. 13046 — Exp. 3-31-89 — CIVIL — STATE OF CALIFORNIA

TOPOGRAPHIC SYMBOLS

Existing Features

- Building
- Foundation or Ruin
- Surfaced Street, Highway or Road
- Curb
- Gravel or Dirt Road
- Drive or Walk
- Trail
- Railroad
- Bridge
- Culvert and Headwalls
- Fence and Gate
- Chain Link Fence
- Guard Railing
- Power Poles
- Other Poles
- Roadside Signs
- Wall
- Overhead Transmission Line (Tower Base to Scale)
- Manhole, Well or Tank
- 123.4 — Spot Elevations (Taken at Decimal Point)
- Channel
- Stream or River
- Body of Water
- Flow
- Depression
- Marsh or Tidal Area
- Flood Channel or Wash
- Spring
- Timber or Brush Area
- Tree
- Orchard
- Vineyard
- Hedge

CONSTRUCTION AND CADASTRAL SYMBOLS

- ℄, ℄ or LOL (9 — 260 — 1) — Centerline, Station Line, Layout Line
- R/W — Right of Way Line
- C, F — Top of Cut, Toe of Fill — Slope Lines
- OG, OG — Original Ground Line
- State or County; City Limits; National or State Forest or Park; Township, Range, Grant; Section or Fraction, Subdivision — Boundary Lines
- 3, 2, 10, 11 — Section Corner
- Structure (Bridge)
- Face of Wall - LOL — Wall
- Concrete Barrier
- AC Dike; AC Overside Drain; Downdrain — Dike and Overside Drain
- Curb without Gutter
- Curb with Gutter
- Guard Railing
- Chain Link Fence
- Other Fence
- Pipe Inlet; Drainage Inlet; Flared End Section — Culvert (36" or less in diameter)
- Headwall; Endwall — Culvert (greater than 36" in diameter)
- Ditch Flow Line

HORIZONTAL AND VERTICAL CONTROL MONUMENTS

- Horizontal Control Monument (2nd Order or Better)
- Horizontal Control Monument and Bench Mark (2nd Order or Better)
- Horizontal Control Monument (Third Order)
- Horizontal Control Monument and Bench Mark (Third Order)
- Bench Mark

REDUCED PLAN
USE SCALE BELOW
0 1 2 3
3 INCHES ON ORIGINAL PLAN

UNDERGROUND UTILITIES

- W — Water
- G — Gas
- S — Sewer
- E — Electric
- T — Telephone
- GS — Gasoline
- O — Oil
- TV — Television

REVISED STANDARD PLAN
RSP A-10A and RSP A-10B supersede Standard Plan A-10 dated July 1, 1984, on page 1 of the Standard Plans book dated July 1984.

STATE OF CALIFORNIA
DEPARTMENT OF TRANSPORTATION

SYMBOLS

RSP A-10B

FOR REDUCED PLANS ORIGINAL SCALE IS IN INCHES 0 1 2 3

RSP A-10B

DIST	COUNTY	ROUTE	POST MILES TOTAL PROJECT	SHEET NO	TOTAL SHEETS
04	Ala	80	2.0	23	68

To Accompany Plans Dated 1-25-88

CHIEF, OFFICE OF STRUCTURE DESIGN
REGISTERED CIVIL ENGINEER

September 4, 1987
PLANS APPROVAL DATE

REGISTERED PROFESSIONAL ENGINEER J E ROBERTS No. 11428 Exp. 12-31-88 CIVIL STATE OF CALIFORNIA

REDUCED PLAN
USE SCALE BELOW
0 1 2 3
3 INCHES ON ORIGINAL PLAN

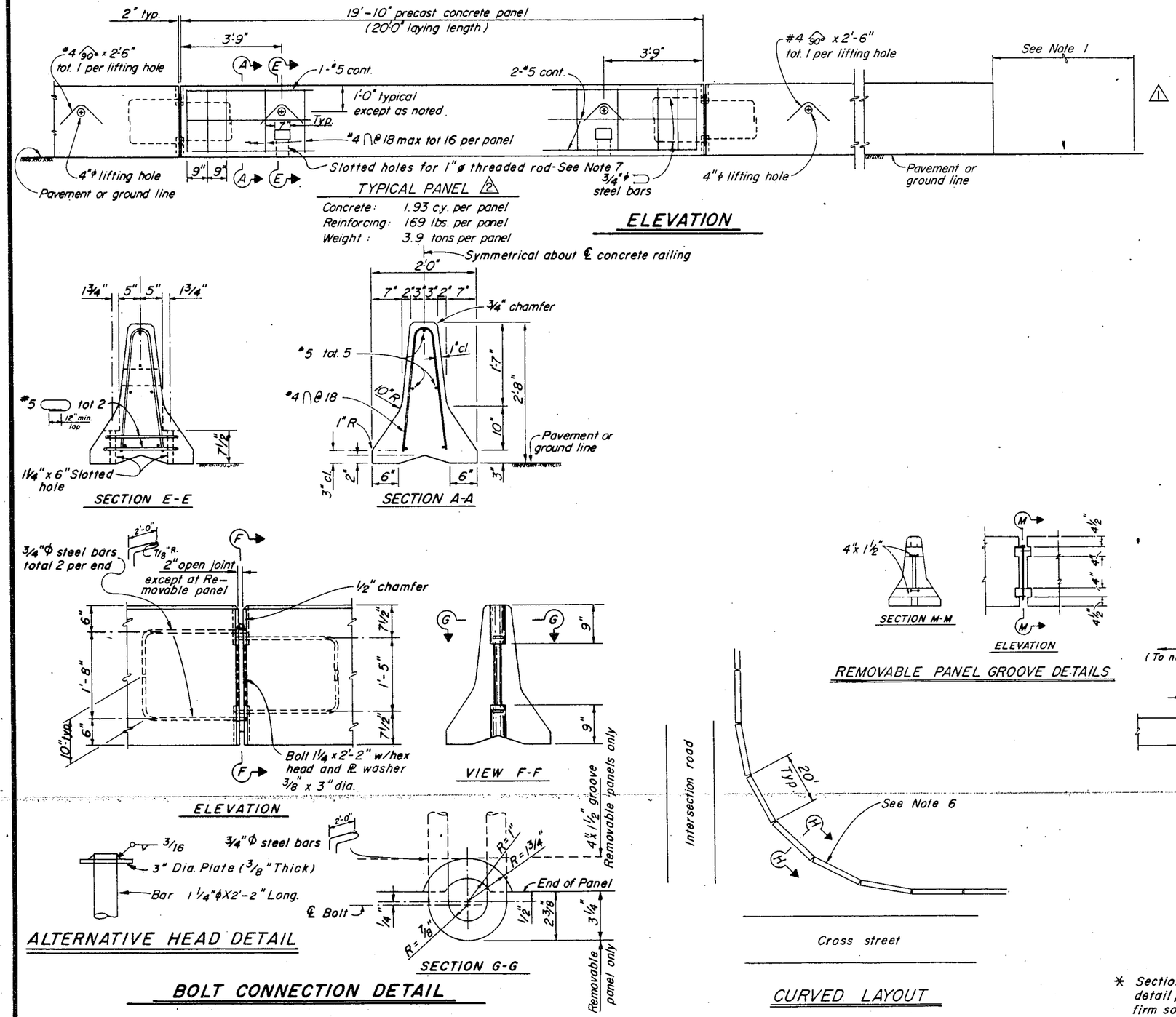

NOTES:

1. For end treatment; layout and crash cushions, where needed; see Road Plans or Special Provisions.
2. Paint entire panel white, or cure with white pigmented curing compound.
3. All 3½" gaps to be backed at the base with #8 x 10" dowel or 1"ϕ pin each side of joint. See Section K-K.
4. Alternative details for lifting the precast concrete panels of the Temporary Railing Type K may be submitted by the Contractor for the Engineer's approval.
5. Where barriers are placed on curves and radii that are too severe to make up joints, barriers are to be backed continuously with earth fill. See Section H-H.
6. Attach units to deck slabs when required by Bridge Plans.

* Section K-K is for P.C.C. pavement. Alternative detail, 1"ϕ pins 2'-0" long driven in A.C. or firm soil permitted, minimum 1'-6" deep.

REVISED STANDARD PLAN
RSP B11-30 dated September 4, 1987 Supercedes Standard Plan B11-30 dated July 1, 1984 on page 121 of the Standard Plans book dated July 1984.

STANDARD DRAWING

FILE No. XS-9-67	DESIGN By Ray B.	Checked JH	Approved Recommended By Joseph M. Wunderlich DESIGN SUPERVISOR
DRAWING DATE 7/87	DETAILS By Ray B.	Checked JH	REGISTERED CIVIL ENGINEER NUMBER 8198
	SUBMITTED BY Ralph W. Stalnaker		

1 Terminal Panel removed.
2 Designation of intermediate panel changed.
3 Minimum edge distance added.
4 Terminal offset removed.

State of CALIFORNIA DEPARTMENT OF TRANSPORTATION

DIVISION OF STRUCTURES
STRUCTURE DESIGN
PROJECT ENGINEER REGISTERED CIVIL ENGINEER NO

BRIDGE NO.
POST MILE

TEMPORARY RAILING (TYPE K)

ORIGINAL SCALE IN INCHES FOR REDUCED PLANS 0 1 2 3

CU
EA

Disregard prints bearing earlier revision dates

DIVISION DATES (PRELIMINARY STAGE ONLY)
7/28/87

RSP B11-30

DH-05-D 147

23

TO ACCOMPANY PLANS DATED 1-25-88

DIST	COUNTY	ROUTE	POST MILE	Sheet No.	Total
04	Ala	80	2.0	24	68

Chief, Office of Structure Design
Registered Civil Engineer
March 7, 1986
Date Approved

REGISTERED PROFESSIONAL ENGINEER J.E. Roberts No. 11428 Exp. 12-31-88 CIVIL STATE OF CALIFORNIA

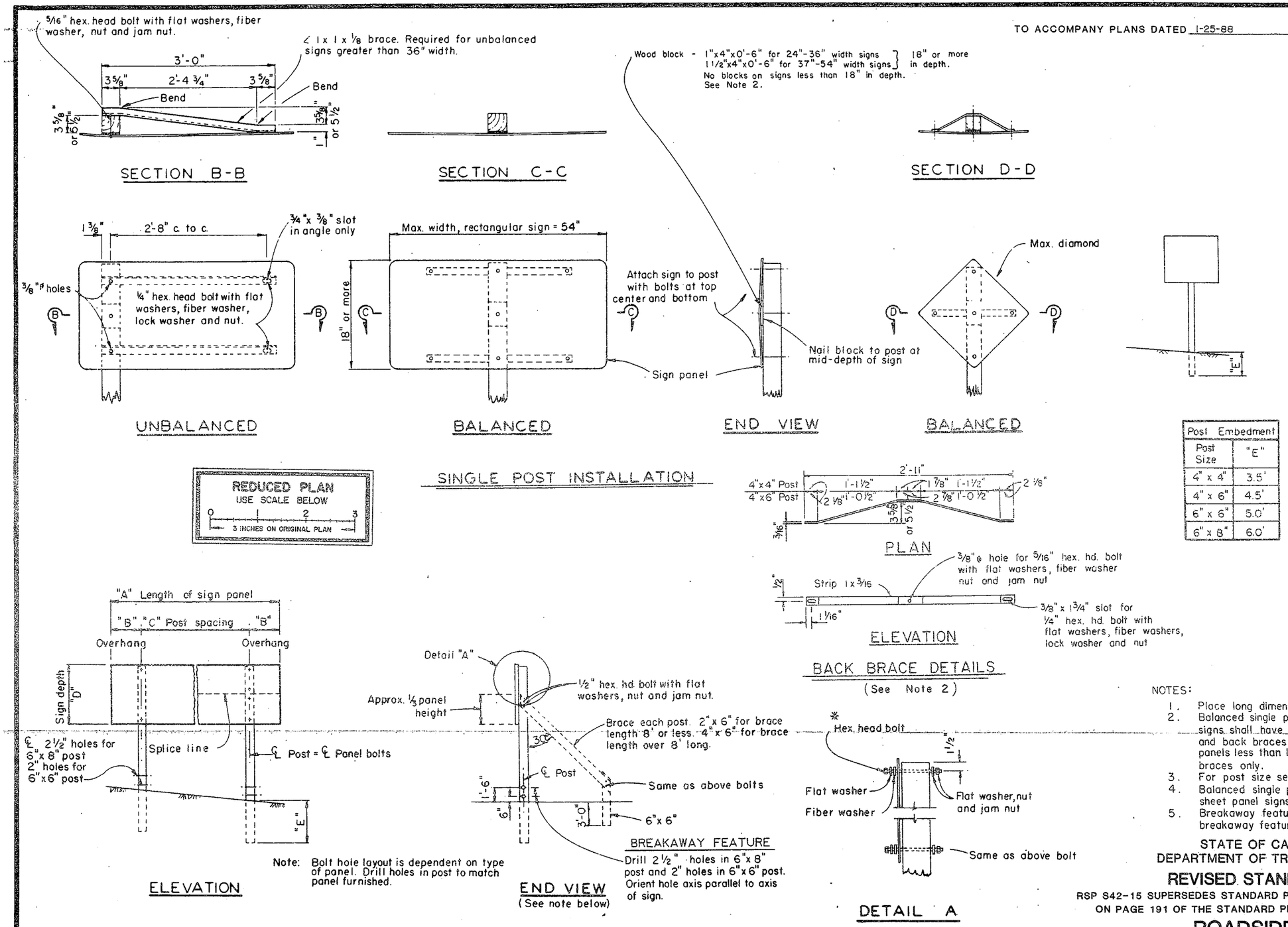

Post Embedment	
Post Size	"E"
4" x 4"	3.5'
4" x 6"	4.5'
6" x 6"	5.0'
6" x 8"	6.0'

POST SPACING TABLE		
SIGN PANEL LENGTH	SIGN PANEL OVERHANG	POST SPACING
"A"	"B"	"C"
4'-8", 5'-0" & 5'-6"	7", 9" & 12"	3'-6"
6'-0" & 6'-6"	12" & 15"	4'-0"
7'-0" & 7'-6"	15" & 18"	4'-6"
8'-0"	18"	5'-0"
8'-6"	20"	5'-2"
9'-0"	22"	5'-4"
9'-6"	23"	5'-8"
10'-0"	24"	6'-0"
10'-6"	24"	6'-6"
11'-0", 11'-6" & 12'-0"	24", 27" & 30"	7'-0"
12'-6"	30"	7'-6"
13'-0"	30"	8'-0"
13'-6" & 14'-6"	30" & 36"	8'-6"
14'-0" & 15'-0"	30" & 36"	9'-0"
15'-6" & 16'-0"	36" & 39"	9'-6"
16'-6"	39"	10'-0"
17'-0" & 17'-6"	39" & 42"	10'-6"
18'-0" & 18'-6"	42" & 45"	11'-0"
19'-0"	45"	11'-6"
19'-6" & 20'-0"	45" & 48"	12'-0"
20'-6" & 21'-0"	48" & 51"	12'-6"
21'-6"	51"	13'-0"
22'-0" & 22'-6"	51" & 54"	13'-6"
23'-0"	54"	14'-0"
23'-6" & 24'-0"	54" & 57"	14'-6"

NOTES:

1. Place long dimension of post cross section normal to sign axis.
2. Balanced single post installations of unframed single sheet aluminum panel signs shall have blocks if 18" or more in depth and a combination of blocks and back braces if 18" or more in depth and 34" or more in width. Sign panels less than 18" in depth and 34" or more in width shall have back braces only.
3. For post size see sign layout, format or quantity sheets.
4. Balanced single post installations of Laminated Panel and Framed single sheet panel signs require back braces when 34" or more in width.
5. Breakaway feature for single post installation shall be the same as the breakaway feature shown for the two post installation.

STATE OF CALIFORNIA
DEPARTMENT OF TRANSPORTATION

REVISED STANDARD PLAN

RSP S42-15 SUPERSEDES STANDARD PLAN S42-15 DATED JULY 1, 1984, ON PAGE 191 OF THE STANDARD PLANS BOOK DATED JULY, 1984.

ROADSIDE SIGN WOOD POSTS

TYPICAL INSTALLATION DETAILS NO. 2

RSP S 42-15

To accompany plans dated 1-25-88

DIST.	COUNTY	ROUTE	POST MILES TOTAL PROJECT	SHEET NO.	TOTAL SHEETS
04	Ala	80	2.0	25	68.

C.D. Bartell
CHIEF, DIVISION OF TRAFFIC ENGINEERING
REGISTERED CIVIL ENGINEER NO. 10995

DATE APPROVED January 6, 1986

REGISTERED PROFESSIONAL ENGINEER C.D. BARTELL No. 10995 Exp. 12/31/88 CIVIL STATE OF CALIFORNIA

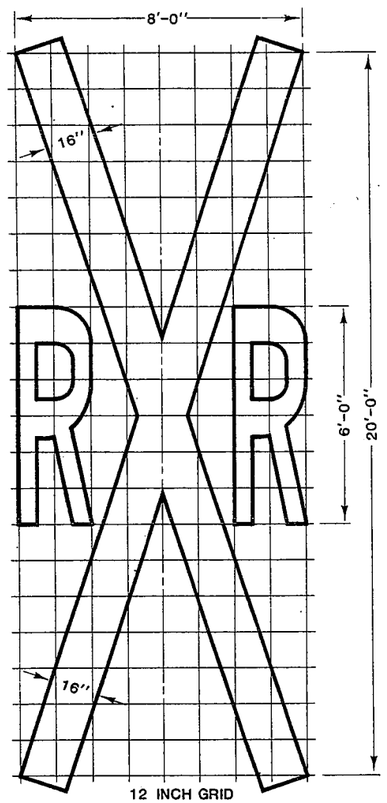

A=70 SQ. FT.
RAILROAD CROSSING SYMBOL

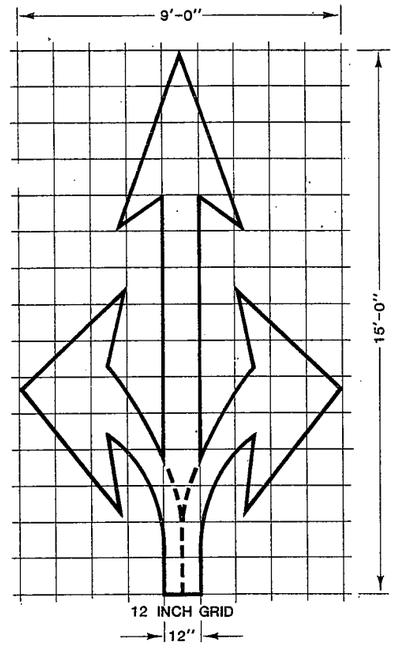

A=36 SQ. FT.
TYPE VIII ARROW

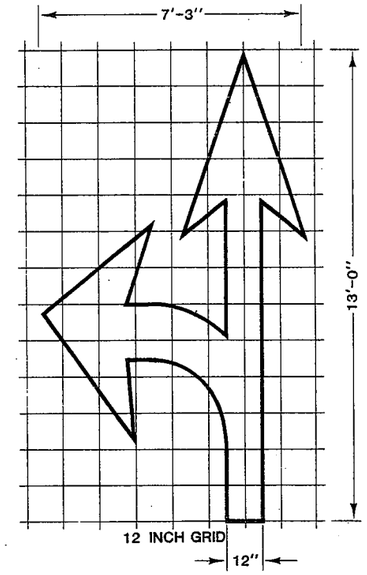

A=27 SQ. FT.
TYPE VII (L) ARROW
(FOR TYPE VII (R) ARROW USE MIRROR IMAGE)

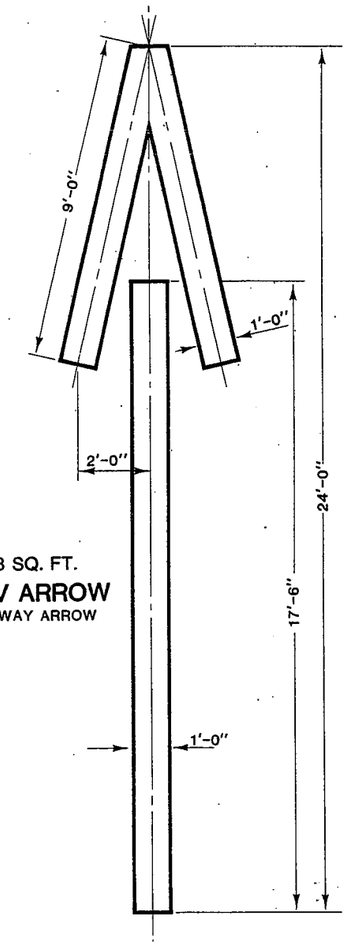

A=33 SQ. FT.
TYPE V ARROW
WRONG WAY ARROW

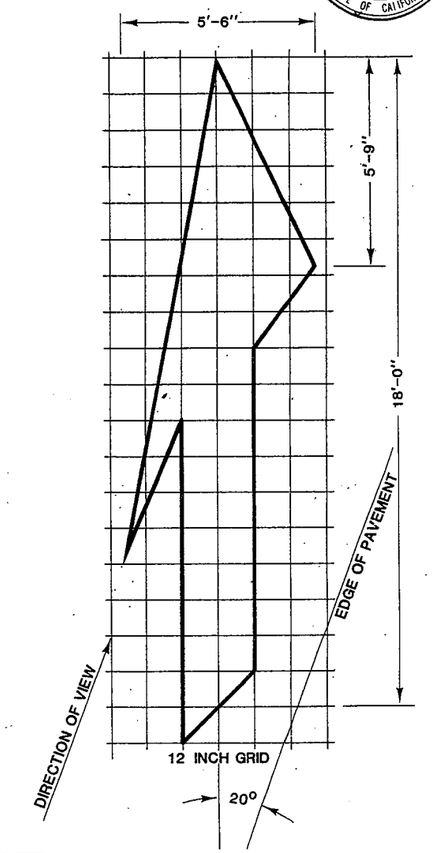

A=42 SQ. FT.
TYPE VI ARROW
RIGHT LANE DROP ARROW
(FOR LEFT LANE, USE MIRROR IMAGE)

REDUCED PLAN
USE SCALE BELOW
0 2 3
3 INCHES ON ORIGINAL PLAN

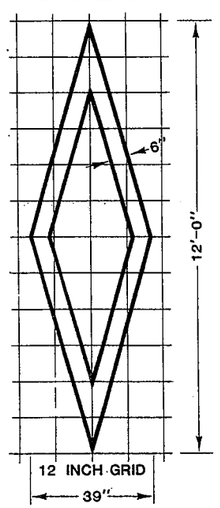

A=11 SQ. FT.
DIAMOND SYMBOL

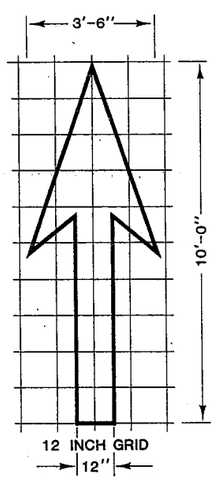

A=14 SQ. FT.
TYPE I (10) ARROW

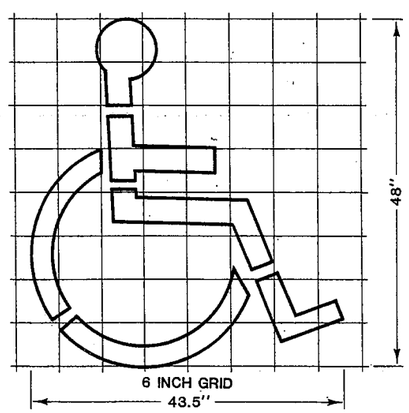

A=4 SQ. FT.
HANDICAPPED PARKING SYMBOL

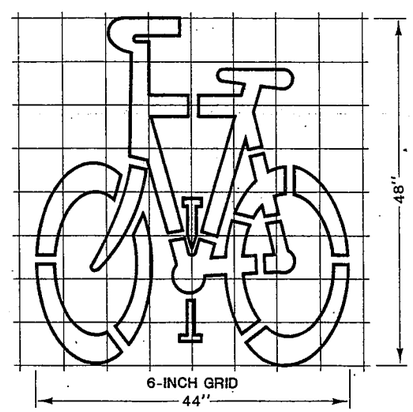

A=7 SQ. FT.
BIKE SYMBOL

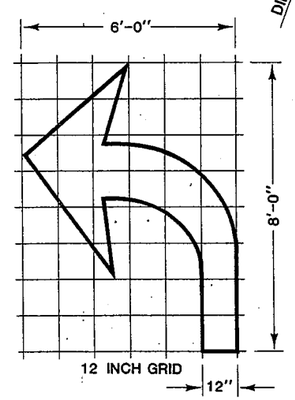

A=15 SQ. FT.
TYPE IV (L) ARROW
(FOR TYPE IV (R) ARROW, USE MIRROR IMAGE)

MINOR VARIATIONS IN DIMENSIONS MAY BE ACCEPTED BY THE ENGINEER.

STATE OF CALIFORNIA
DEPARTMENT OF TRANSPORTATION

PAVEMENT MARKINGS, ARROWS AND SYMBOLS

NSP A-24B

Project Engineer | Date | Design Engineer | Date | Approval Recommended by | Date

25

M DC-OE-92-PF (REV. 10/85)

FOR REDUCED PLANS ORIGINAL SCALE IS IN INCHES 0 1 2

DIST.	COUNTY	ROUTE	POST MILES TOTAL PROJECT	SHEET NO	TOTAL SHEETS
04	Ala	80	2.0	26	68

REGISTERED ENGINEER - CIVIL
1-25-88
PLANS APPROVAL DATE

REGISTERED PROFESSIONAL ENGINEER C L PEARSON No. C13175 Exp. 3/31/89 CIVIL STATE OF CALIFORNIA

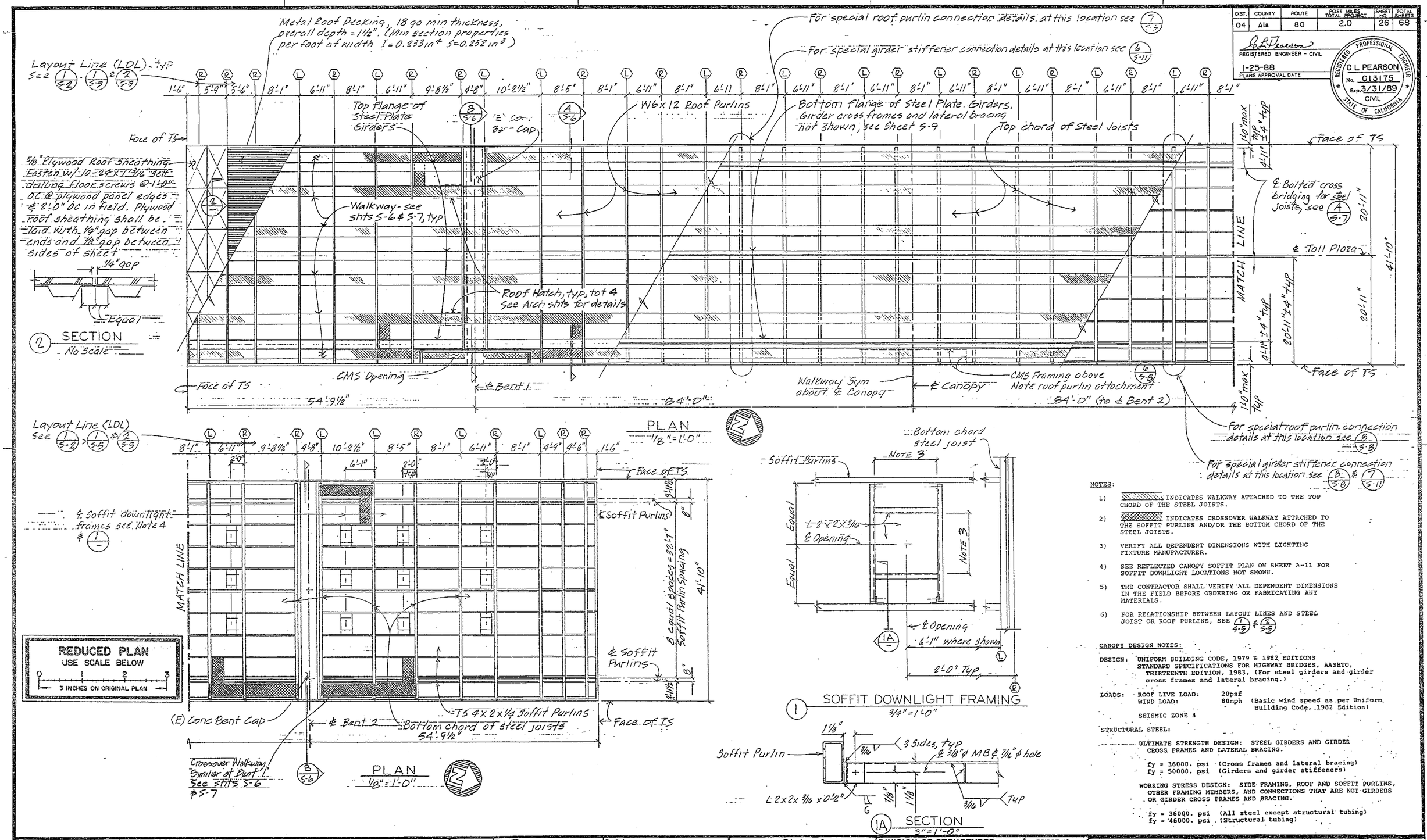

NOTES:

1) ▨ INDICATES WALKWAY ATTACHED TO THE TOP CHORD OF THE STEEL JOISTS.

2) ▩ INDICATES CROSSOVER WALKWAY ATTACHED TO THE SOFFIT PURLINS AND/OR THE BOTTOM CHORD OF THE STEEL JOISTS.

3) VERIFY ALL DEPENDENT DIMENSIONS WITH LIGHTING FIXTURE MANUFACTURER.

4) SEE REFLECTED CANOPY SOFFIT PLAN ON SHEET A-11 FOR SOFFIT DOWNLIGHT LOCATIONS NOT SHOWN.

5) THE CONTRACTOR SHALL VERIFY ALL DEPENDENT DIMENSIONS IN THE FIELD BEFORE ORDERING OR FABRICATING ANY MATERIALS.

6) FOR RELATIONSHIP BETWEEN LAYOUT LINES AND STEEL JOIST OR ROOF PURLINS, SEE 1/S-5 & 2/S-5

CANOPY DESIGN NOTES:

DESIGN: UNIFORM BUILDING CODE, 1979 & 1982 EDITIONS
STANDARD SPECIFICATIONS FOR HIGHWAY BRIDGES, AASHTO, THIRTEENTH EDITION, 1983. (For steel girders and girder cross frames and lateral bracing.)

LOADS: ROOF LIVE LOAD: 20psf
WIND LOAD: 80mph (Basic wind speed as per Uniform Building Code, 1982 Edition)
SEISMIC ZONE 4

STRUCTURAL STEEL:

ULTIMATE STRENGTH DESIGN: STEEL GIRDERS AND GIRDER CROSS FRAMES AND LATERAL BRACING.

fy = 36000. psi (Cross frames and lateral bracing)
fy = 50000. psi (Girders and girder stiffeners)

WORKING STRESS DESIGN: SIDE FRAMING, ROOF AND SOFFIT PURLINS, OTHER FRAMING MEMBERS, AND CONNECTIONS THAT ARE NOT GIRDERS OR GIRDER CROSS FRAMES AND BRACING.

fy = 36000. psi (All steel except structural tubing)
fy = 46000. psi (Structural tubing)

	By	Date	Checked	Date
DESIGN	DECCHIA	7/86	A. Gugino	8/86
DETAILS	GF Bidwell	7-86	A. Gugino	8/86
QUANTITIES	By		Checked	

State of CALIFORNIA DEPARTMENT OF TRANSPORTATION

DIVISION OF STRUCTURES
STRUCTURE DESIGN
DECCHIA C32049
PROJECT ENGINEER REGISTERED CIVIL ENGINEER NO.

BRIDGE NO. 33M5785
POST MILE 2.0-2.1

SFOBB TOLL PLAZA CANOPY
CANOPY FRAMING PLAN

SHEET S-1

ORIGINAL SCALE IN INCHES FOR REDUCED PLANS 0 1 2 3

CU 04334
EA 003181

Disregard prints bearing earlier revision dates

REVISION DATES (PRELIMINARY STAGE ONLY)

SHEET 1 OF 18

DS OSD 2139A (5/86)

DIST.	COUNTY	ROUTE	POST MILES TOTAL PROJECT	SHEET NO.	TOTAL SHEETS
04	Ala	80	2.0	29	68

REGISTERED ENGINEER - CIVIL: C. L. Pearson

PLANS APPROVAL DATE: 1-25-88

REGISTERED PROFESSIONAL ENGINEER — C L PEARSON — No. C13175 — Exp. 3/31/89 — CIVIL — STATE OF CALIFORNIA

REDUCED PLAN
USE SCALE BELOW
0 1 2 3
3 INCHES ON ORIGINAL PLAN

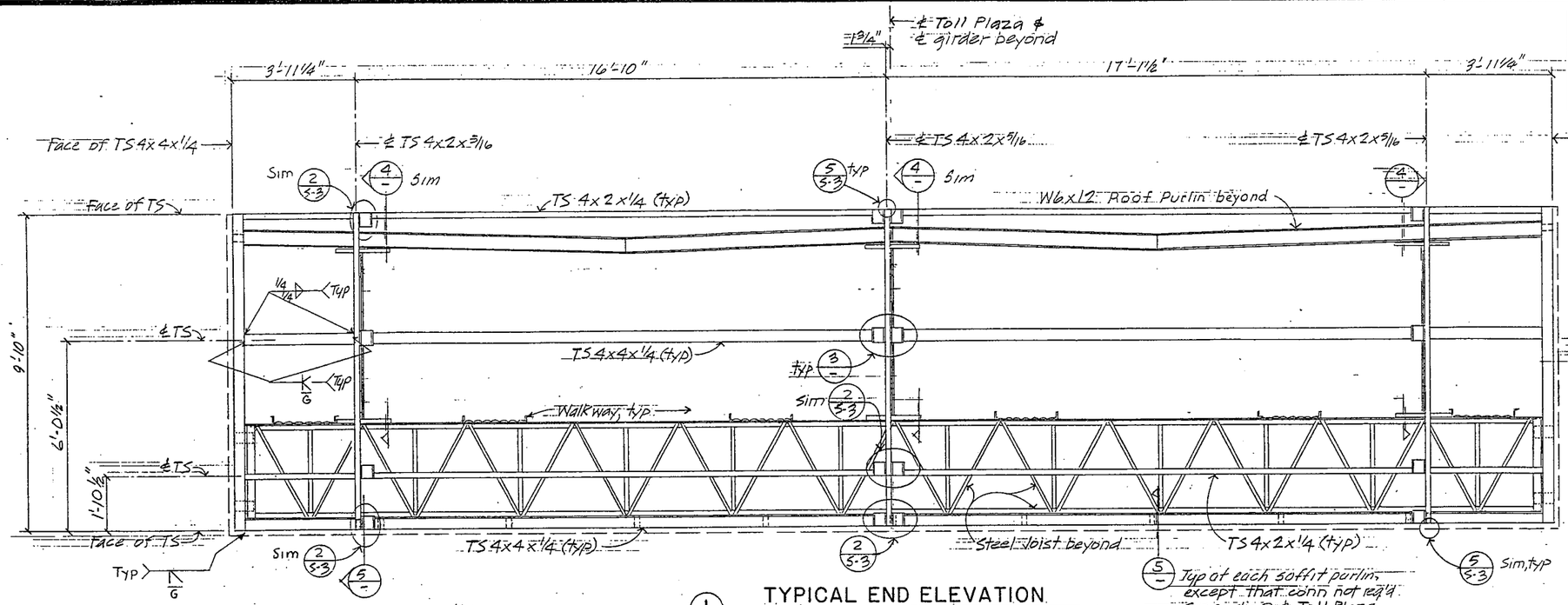

1 TYPICAL END ELEVATION
½" = 1'-0"

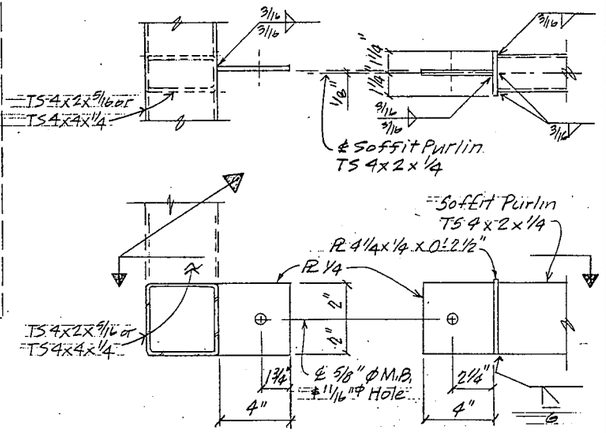

5 CONN DETAIL
3" = 1'-0"

Typ at each soffit purlin, except that conn not req'd for purlin @ ℄ Toll Plaza

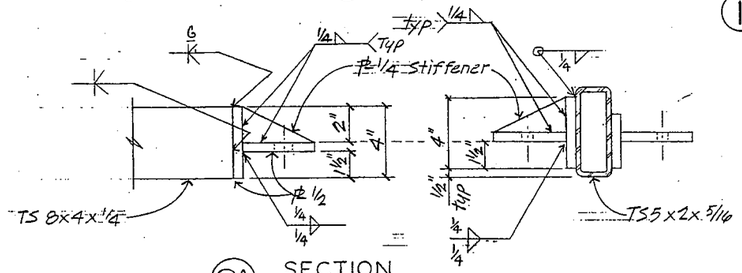

2A SECTION
3" = 1'-0"

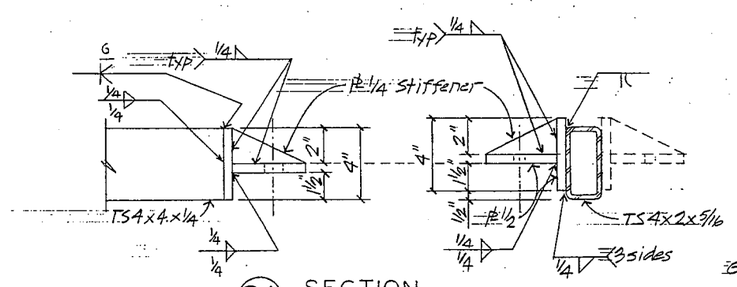

3A SECTION
3" = 1'-0"

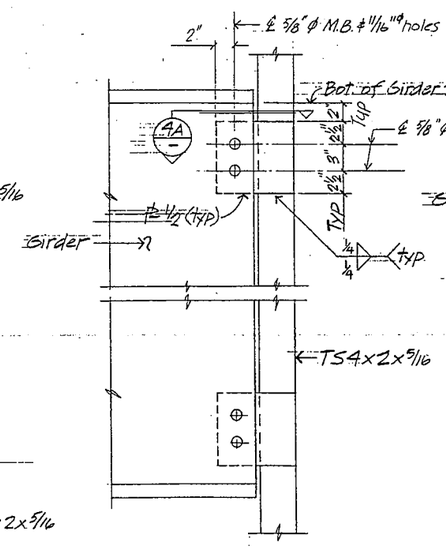

4 CONN DETAIL
1½" = 1'-0"

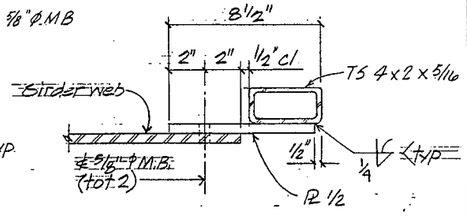

4A SECTION
3" = 1'-0"

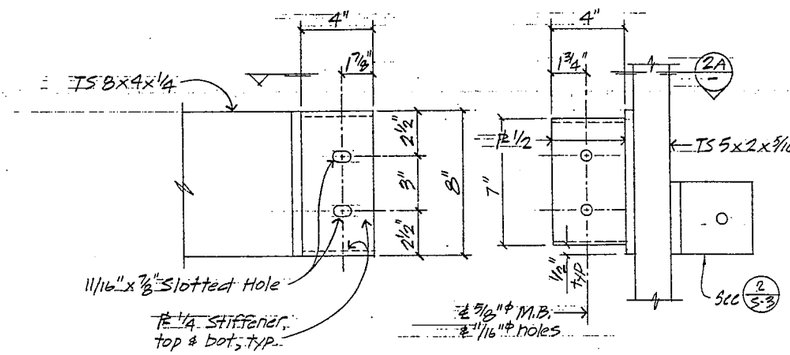

2 CONN DETAIL
3" = 1'-0"

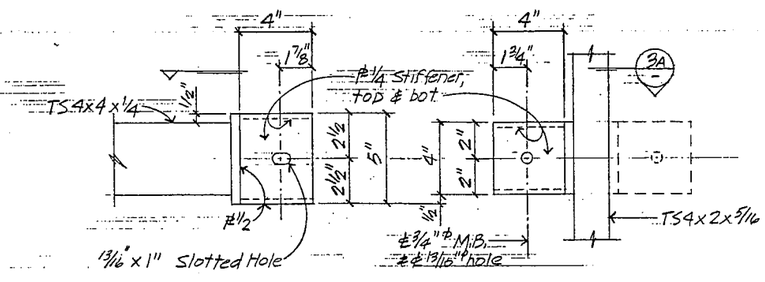

3 CONN DETAIL
3" = 1'-0"

NOTE!
All machine bolts (M.B.'s) shall have double nuts. A washer shall be placed under the bolt head and the double nut. Bolts, nuts and washers shall be galvanized.

NOTE:
THE CONTRACTOR SHALL VERIFY ALL DEPENDENT DIMENSIONS IN THE FIELD BEFORE ORDERING OR FABRICATING ANY MATERIAL.

29

DESIGN	By A.M. Gugino 7/86	Checked DECCHIA 8/86	
DETAILS	By GF Bidwell 7-86	Checked DECCHIA 8/86	
QUANTITIES	By	Checked	

State of CALIFORNIA
DEPARTMENT OF TRANSPORTATION

DIVISION OF STRUCTURES
STRUCTURE DESIGN
DECCHIA — PROJECT ENGINEER — C32049 — REGISTERED CIVIL ENGINEER NO.

BRIDGE NO. 33M5785
POST MILE 2.0-2.1

SFOBB TOLL PLAZA CANOPY
CANOPY TYPICAL SECTION & DETAILS

SHEET S-4

DS OSD 2139 A (5/86)

ORIGINAL SCALE IN INCHES FOR REDUCED PLANS 0 1 2 3

CU 04334
EA 003181

Disregard prints bearing earlier revision dates

REVISION DATES (PRELIMINARY STAGE ONLY)

SHEET 4 OF 18

DIST.	COUNTY	ROUTE	POST MILES TOTAL PROJECT	SHEET NO.	TOTAL SHEETS
04	Ala	80	2.0	30	68

REGISTERED ENGINEER - CIVIL
1-25-88
PLANS APPROVAL DATE

REGISTERED PROFESSIONAL ENGINEER C L PEARSON No. C13175 Exp. 3/31/89 CIVIL STATE OF CALIFORNIA

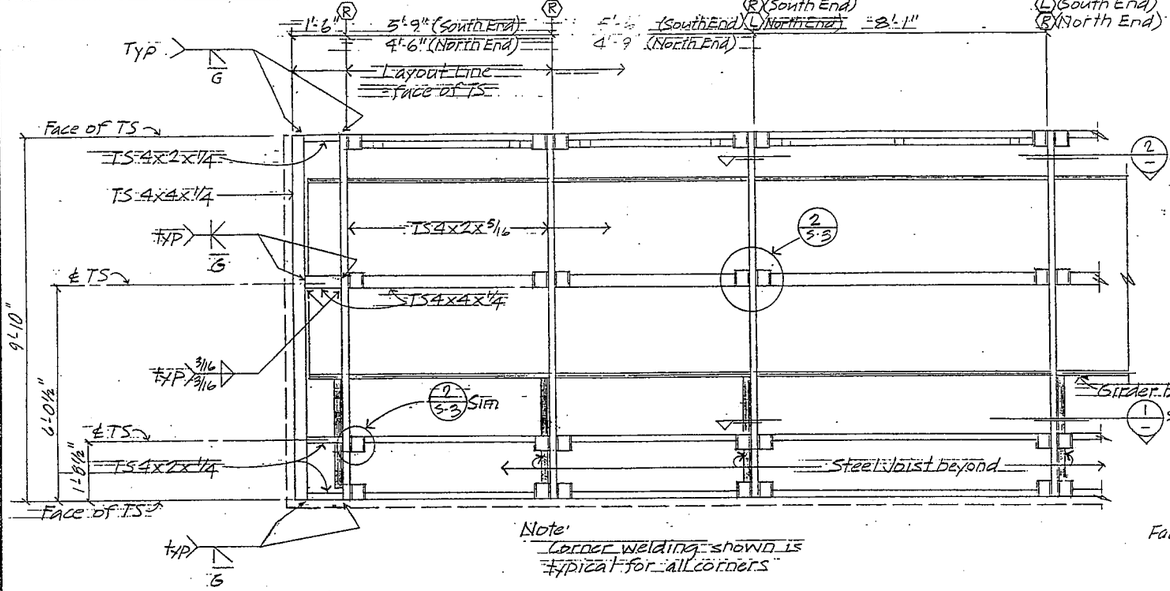

A EAST ELEVATION AT CORNER, TYP
1/2" = 1'-0"

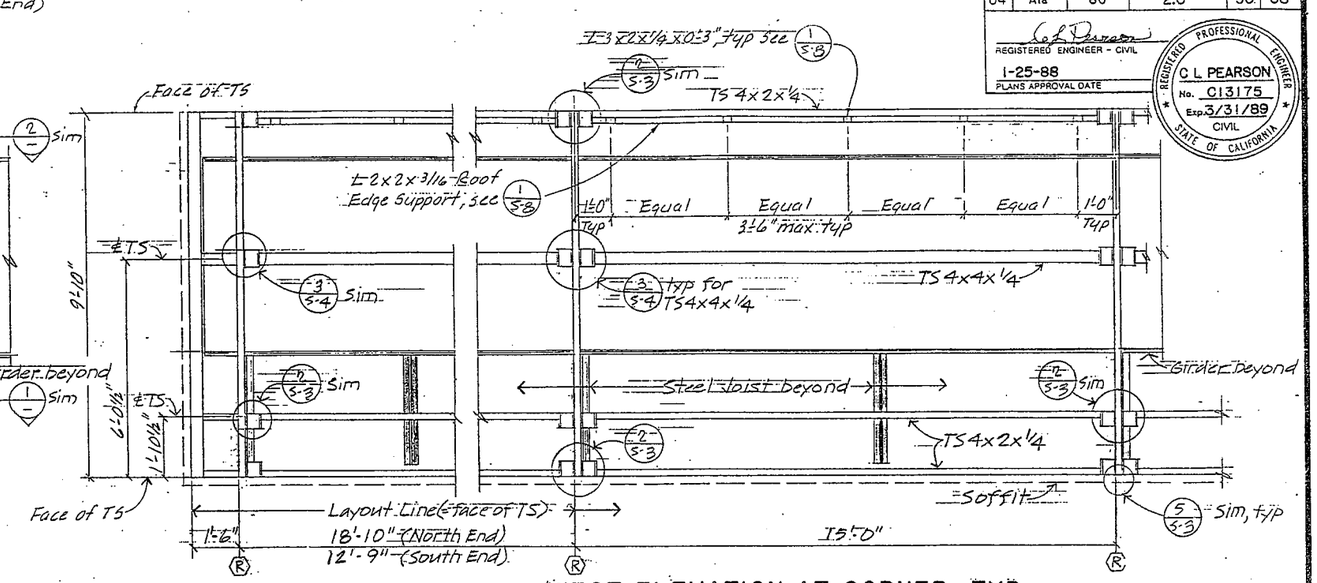

B WEST ELEVATION AT CORNER, TYP
1/2" = 1'-0"

REDUCED PLAN
USE SCALE BELOW
0 1 2 3
3 INCHES ON ORIGINAL PLAN

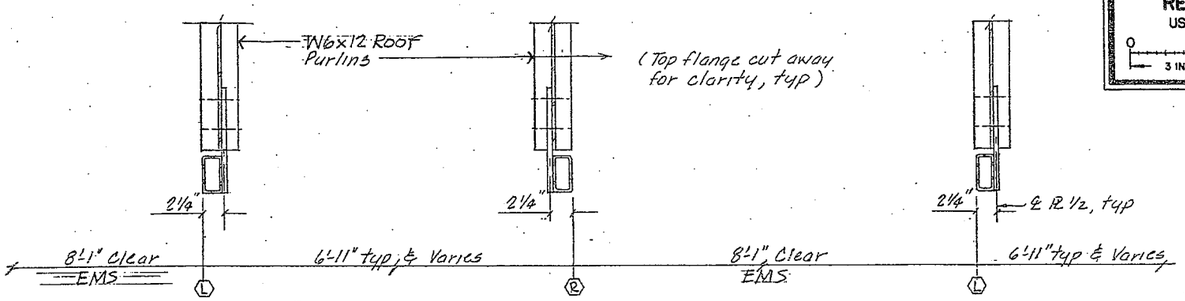

2 VERT. FRAMING/ROOF PURLIN LAYOUT, TYP
1½" = 1'-0"

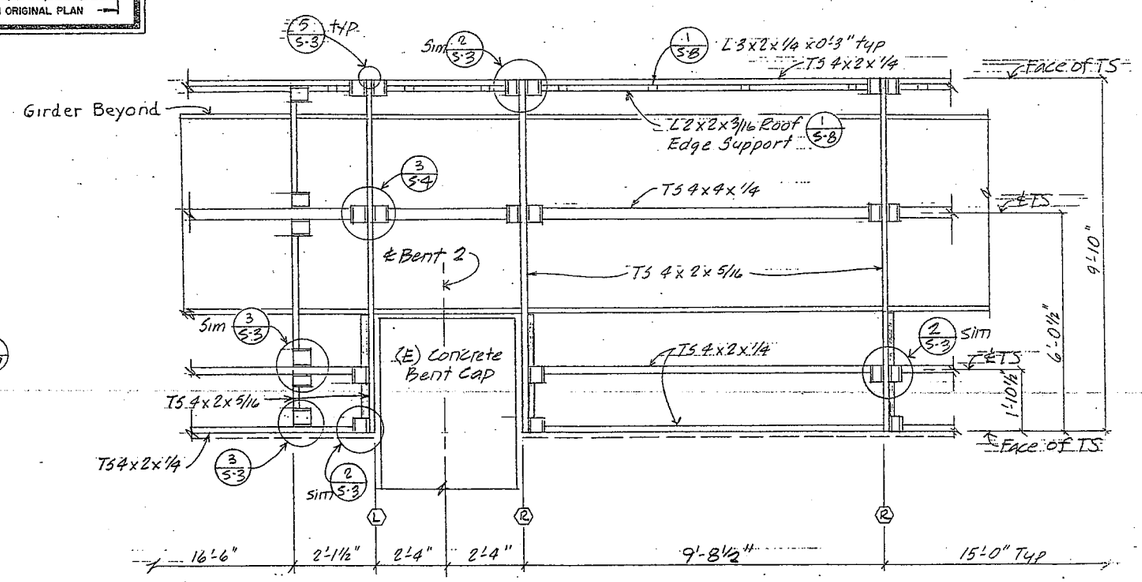

C PARTIAL WEST SIDE FRAMING ELEVATION AT BENT 2 (Bent 1 Similar)
1/2" = 1'-0"

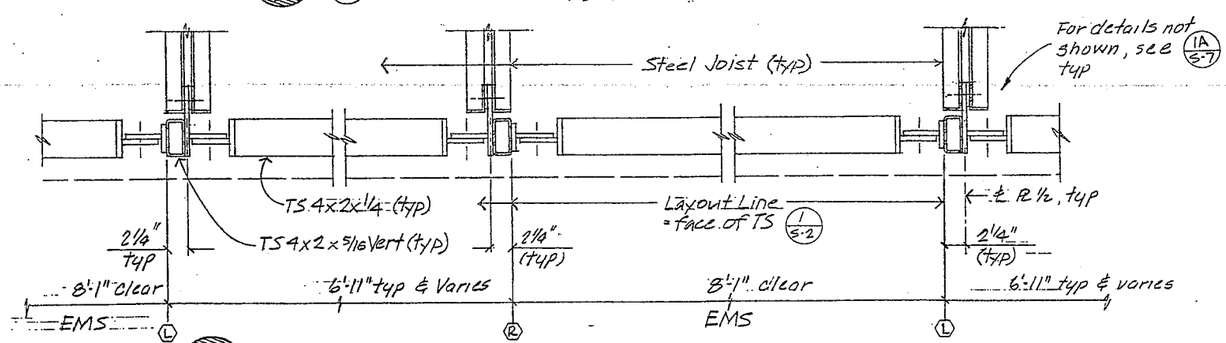

1 VERT. FRAMING/JOIST LAYOUT, TYP
1½" = 1'-0"

NOTE: ALL MACHINE BOLTS (MB'S) SHALL HAVE DOUBLE NUTS. A WASHER SHALL BE PLACED UNDER BOTH THE BOLT HEAD AND THE DOUBLE NUTS. BOLTS, NUTS & WASHERS SHALL BE GALVANIZED.

NOTE:
THE CONTRACTOR SHALL VERIFY ALL DEPENDENT DIMENSIONS IN THE FIELD BEFORE ORDERING OR FABRICATING ANY MATERIAL.

	By	Checked
DESIGN	AM. Gugino 7/86	DECCHIA 9/86
DETAILS	GF Bidwell 7-86	DECCHIA 9/86
QUANTITIES		

State of CALIFORNIA DEPARTMENT OF TRANSPORTATION

DIVISION OF STRUCTURES
STRUCTURE DESIGN
DECCHIA C32049
PROJECT ENGINEER REGISTERED CIVIL ENGINEER NO.

BRIDGE NO. 33M5785
POST MILE 2.0-2.1

SFOBB TOLL PLAZA CANOPY
CANOPY FRAMING DETAILS AT CORNERS

SHEET S-5

DS OSD 2139A (5/86)

ORIGINAL SCALE IN INCHES FOR REDUCED PLANS 0 1 2 3

CU 04334
EA 003181

Disregard prints bearing earlier revision dates

REVISION DATES (PRELIMINARY STAGE ONLY)

SHEET 5 OF 18

DIST.	COUNTY	ROUTE	POST MILES TOTAL PROJECT	SHEET NO.	TOTAL SHEETS
04	Ala	80	2.0	31	68

REGISTERED ENGINEER - CIVIL
1-25-88
PLANS APPROVAL DATE

REGISTERED PROFESSIONAL ENGINEER C. L. PEARSON No. C13175 Exp. 3/31/89 CIVIL STATE OF CALIFORNIA

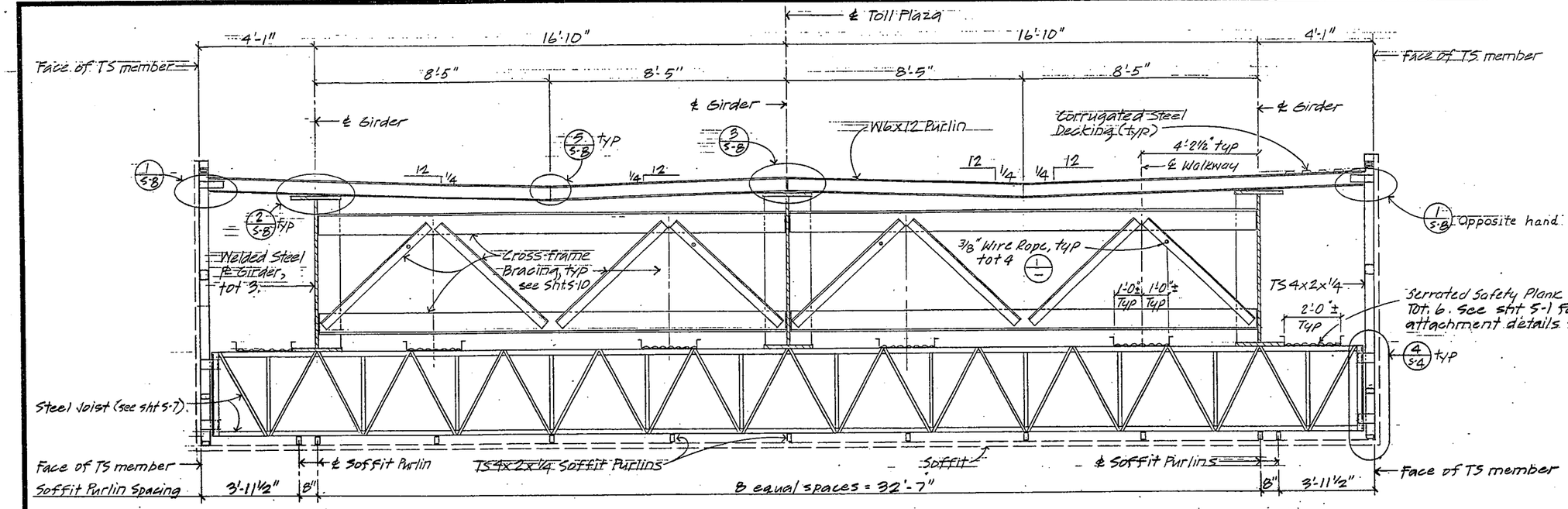

REDUCED PLAN
USE SCALE BELOW
0 1 2 3
3 INCHES ON ORIGINAL PLAN

(A) TYPICAL SECTION BETWEEN BENTS
½" = 1'-0"

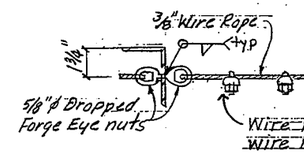

Note:
Tighten wire ropes and clips at every third cross-frame. Drill ½"ϕ hole at intermediate cross-frames.

(1) SAFETY ROPE ANCHORAGE
No Scale

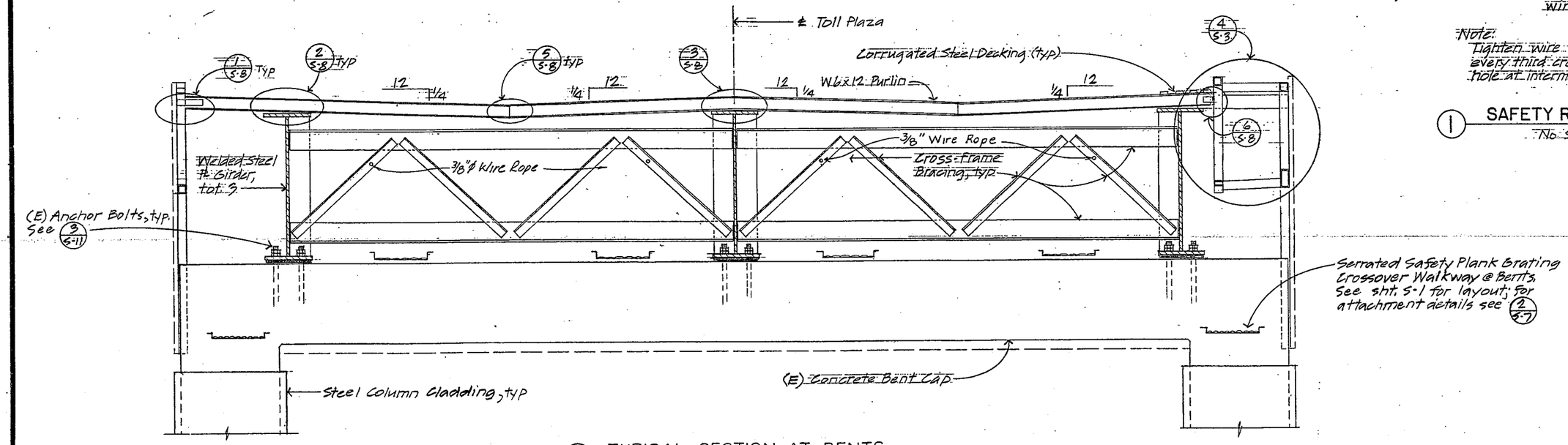

(B) TYPICAL SECTION AT BENTS
½" = 1'-0"

NOTE:
THE CONTRACTOR SHALL VERIFY ALL DEPENDENT DIMENSIONS IN THE FIELD BEFORE ORDERING OR FABRICATING ANY MATERIAL.

31

	By	Checked
DESIGN	A.M. Gugino 7/86	DECCHIA 9/86
DETAILS	GF Bidwell 7-86	DECCHIA 9/86
QUANTITIES		

State of CALIFORNIA DEPARTMENT OF TRANSPORTATION

DIVISION OF STRUCTURES
STRUCTURE DESIGN
DECCHIA — PROJECT ENGINEER
C32049 — REGISTERED CIVIL ENGINEER NO.

BRIDGE NO. 33M5785
POST MILE 2.0-2.1

SFOBB TOLL PLAZA CANOPY
CANOPY TYPICAL SECTIONS

SHEET S-6

DS 050 2139A (5/86)

ORIGINAL SCALE IN INCHES FOR REDUCED PLANS 0 1 2 3

CU 04334
EA 003181

Disregard prints bearing earlier revision dates

REVISION DATES (PRELIMINARY STAGE ONLY)

SHEET 6 OF 18

DIST.	COUNTY	ROUTE	POST MILES TOTAL PROJECT	SHEET NO	TOTAL SHEETS
04	Ala	80	2.0	32	68

C L Pearson
REGISTERED ENGINEER - CIVIL
1-25-88
PLANS APPROVAL DATE

REGISTERED PROFESSIONAL ENGINEER — C L PEARSON No. C13175 Exp. 3/31/89 CIVIL — STATE OF CALIFORNIA

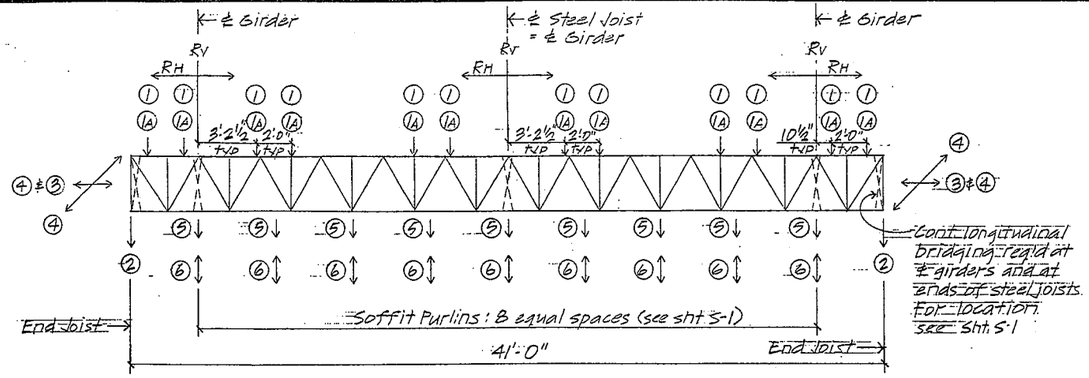

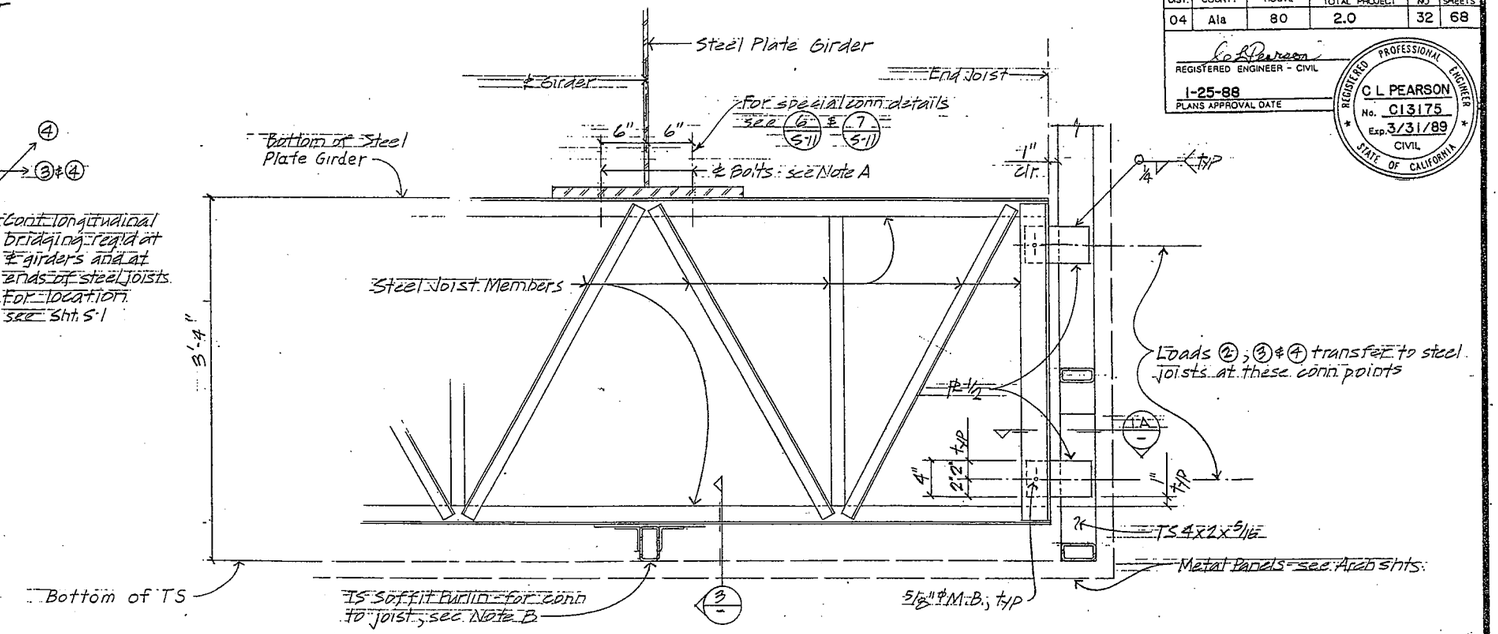

1 PART ELEVATION – STEEL JOIST
1½" = 1'-0"

DESIGN LOADS:

1. WALKWAY DEAD LOAD = 40 lb
1A. WALKWAY LIVE LOAD = 160 lb
2. WALL FRAMING DEAD LOAD = 1,500 lb (see 1/-)
3. LATERAL WIND LOAD = 2,400 lb (see 1/-)
4. LONGITUDINAL EARTHQUAKE LOAD = 450 lb (see 1/-)
5. SOFFIT DEAD LOAD = 300 lb (see 3A/-)
6. SOFFIT WIND LOAD = 1,000 lb (see 3A/-)

CAMBER:
STEEL JOIST SHALL BE CAMBERED AS REQUIRED FOR DEAD LOADS TO PROVIDE A FLAT AND LEVEL PROFILE.

A STEEL JOIST LOADING DIAGRAM
No Scale

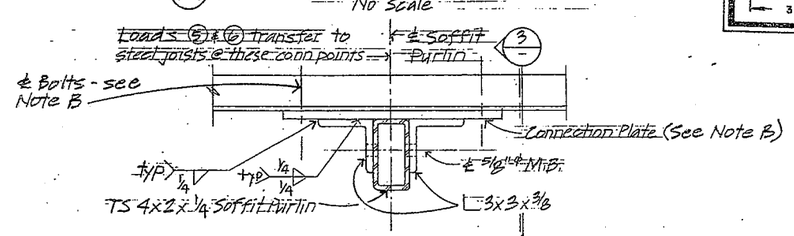

3A SOFFFIT PURLIN/JOIST CONN
3" = 1'-0"

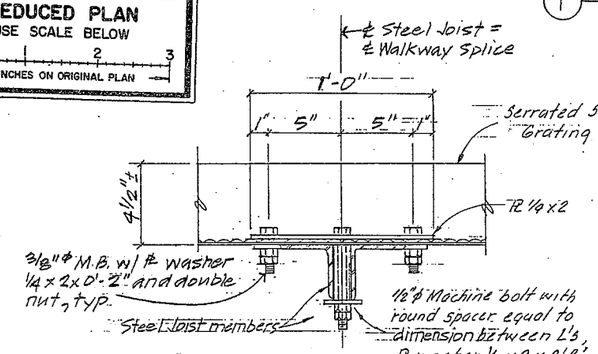

2A SECTION
3" = 1'-0"

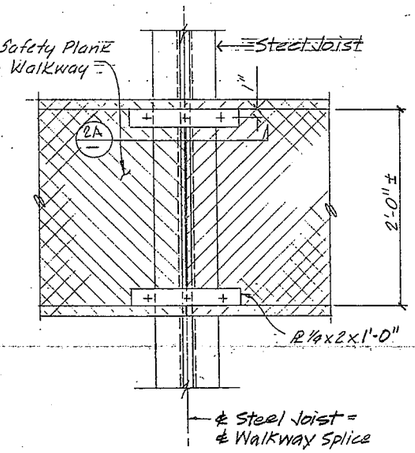

2 PLAN – GRATING ATTACHMENT/SPLICE
1½" = 1'-0"

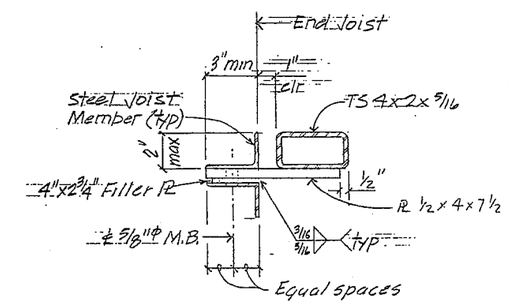

1A SECTION
3" = 1'-0"

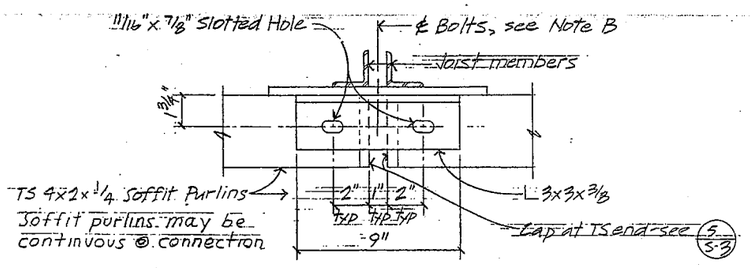

3 SOFFIT PURLIN/JOIST CONN
3" = 1'-0"

WALKWAY NOTES:

1. See Shts S-1 and S-6 for walkway layout details
2. Each walkway shall extend for the entire 276'-10"± length along the Steel Plate Girders, except where discontinued at the Crossover Walkways shown on sht. S-1.

CONNECTION DESIGN NOTES:

A. The steel joist to plate girder connection shall be designed for the maximum reaction (R) generated by the loads shown at A/-
B. The soffit purlin to steel joist connection, including the size of the connection plate and machine bolts, shall be designed for the applicable loads shown at A/-

NOTE:
THE CONTRACTOR SHALL VERIFY ALL DEPENDENT DIMENSIONS IN THE FIELD BEFORE ORDERING OR FABRICATING ANY MATERIAL.

NOTE:
All machine bolts (M.B.) shall have double nuts. A washer shall be placed under both the bolt head and the double nuts. Bolts, washers and nuts shall be galvanized.

REDUCED PLAN
USE SCALE BELOW
0 2 3
3 INCHES ON ORIGINAL PLAN

	By	Date	Checked	Date
DESIGN	A.M. Gugino	7/86	DECCHIA	8/86
DETAILS	GF Bidwell	7-86	DECCHIA	8/86
QUANTITIES				

State of CALIFORNIA DEPARTMENT OF TRANSPORTATION

DIVISION OF STRUCTURES
STRUCTURE DESIGN
DECCHIA — PROJECT ENGINEER
C32049 — REGISTERED CIVIL ENGINEER NO.

BRIDGE NO. 33M5785
POST MILE 2.0-2.1

SFOBB TOLL PLAZA CANOPY
STEEL JOIST DETAILS

SHEET S-7

DS 050 2139A (5/86)

ORIGINAL SCALE IN INCHES FOR REDUCED PLANS 0 1 2 3

CU 04334
EA 003181

Disregard prints bearing earlier revision dates

REVISION DATES (PRELIMINARY STAGE ONLY) 11/19/86

SHEET 7 OF 18

DIST.	COUNTY	ROUTE	POST MILES TOTAL PROJECT	SHEET NO	TOTAL SHEETS
04	Ala	80	2.0	33	68

C. L. Pearson
REGISTERED ENGINEER - CIVIL
1-25-88
PLANS APPROVAL DATE

REGISTERED PROFESSIONAL ENGINEER
C. L. PEARSON
No. C13175
Exp. 3/31/89
CIVIL
STATE OF CALIFORNIA

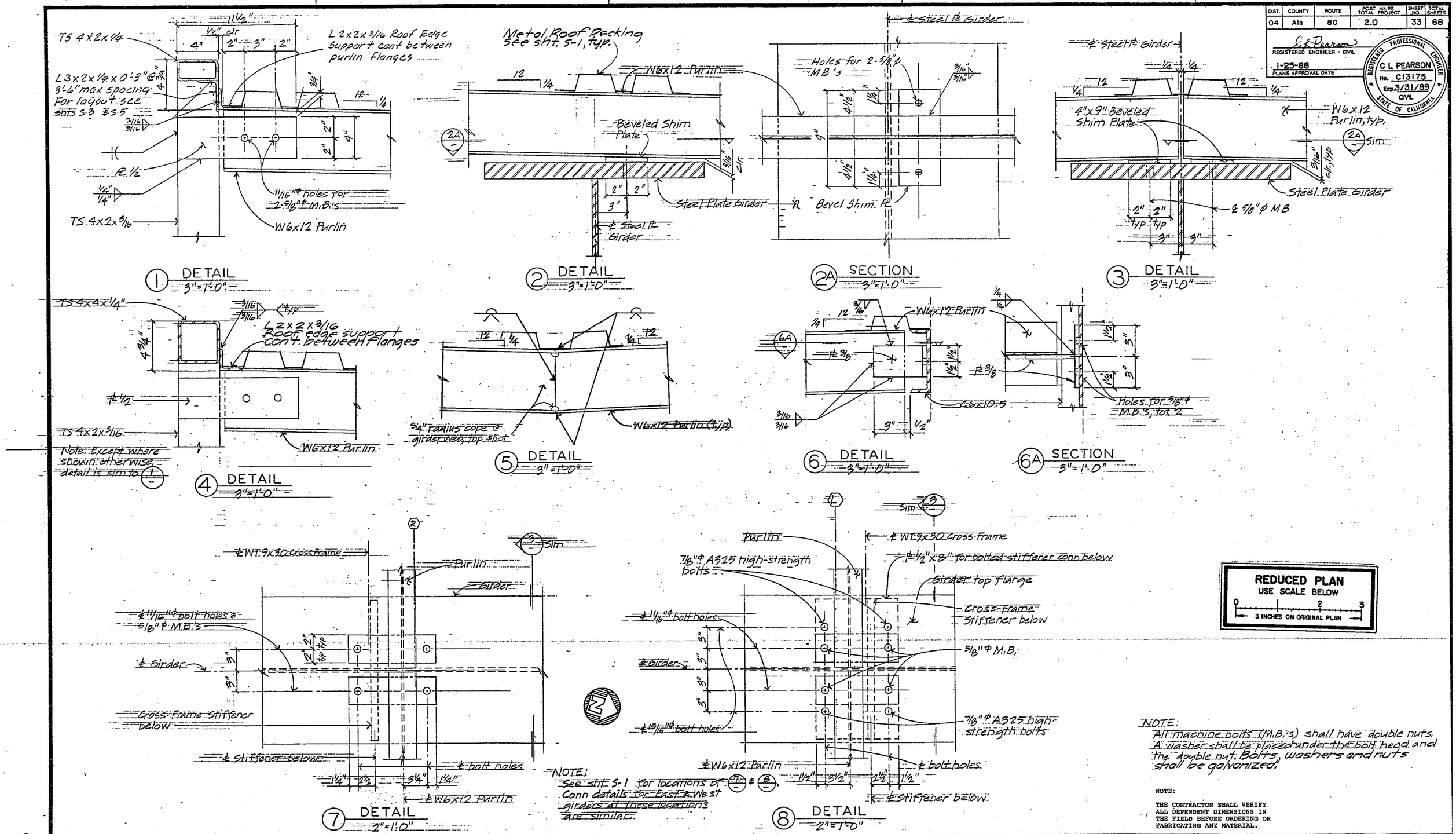

NOTE:
See sht. S-1 for locations of 7 & 8. Conn details for East & West girders at these locations are similar.

REDUCED PLAN
USE SCALE BELOW
0 1 2 3
3 INCHES ON ORIGINAL PLAN

NOTE:
All machine bolts (M.B.'s) shall have double nuts. A washer shall be placed under the bolt head and the double nut. Bolts, washers and nuts shall be galvanized.

NOTE:
THE CONTRACTOR SHALL VERIFY ALL DEPENDENT DIMENSIONS IN THE FIELD BEFORE ORDERING OR FABRICATING ANY MATERIAL.

33

	By	Date	Checked	Date
DESIGN	A. Gugino	8/86	L. Decchia	8/86
DETAILS	G.F. Bidwell	7-86	L. Decchia	8/86
QUANTITIES				

State of CALIFORNIA
DEPARTMENT OF TRANSPORTATION

DIVISION OF STRUCTURES
STRUCTURE DESIGN
L. Decchia C32049
PROJECT ENGINEER REGISTERED CIVIL ENGINEER NO.

BRIDGE NO. 33M5785
POST MILE 2.0-2.1

SFOBB TOLL PLAZA CANOPY
ROOF PURLIN CONN DETAILS

SHEET S-8

DS OSD 2139A (5/86)

ORIGINAL SCALE IN INCHES FOR REDUCED PLANS 0 1 2 3

CU 04334
EA 003181

Disregard prints bearing earlier revision dates

REVISION DATES (PRELIMINARY STAGE ONLY)
11/19/86

SHEET 8 OF 18

DIST.	COUNTY	ROUTE	POST MILES TOTAL PROJECT	SHEET NO.	TOTAL SHEETS
04	Ala	80	2.0	34	68

REGISTERED ENGINEER - CIVIL
1-25-88
PLANS APPROVAL DATE

REGISTERED PROFESSIONAL ENGINEER C L PEARSON No. C13175 Exp. 3/31/89 CIVIL STATE OF CALIFORNIA

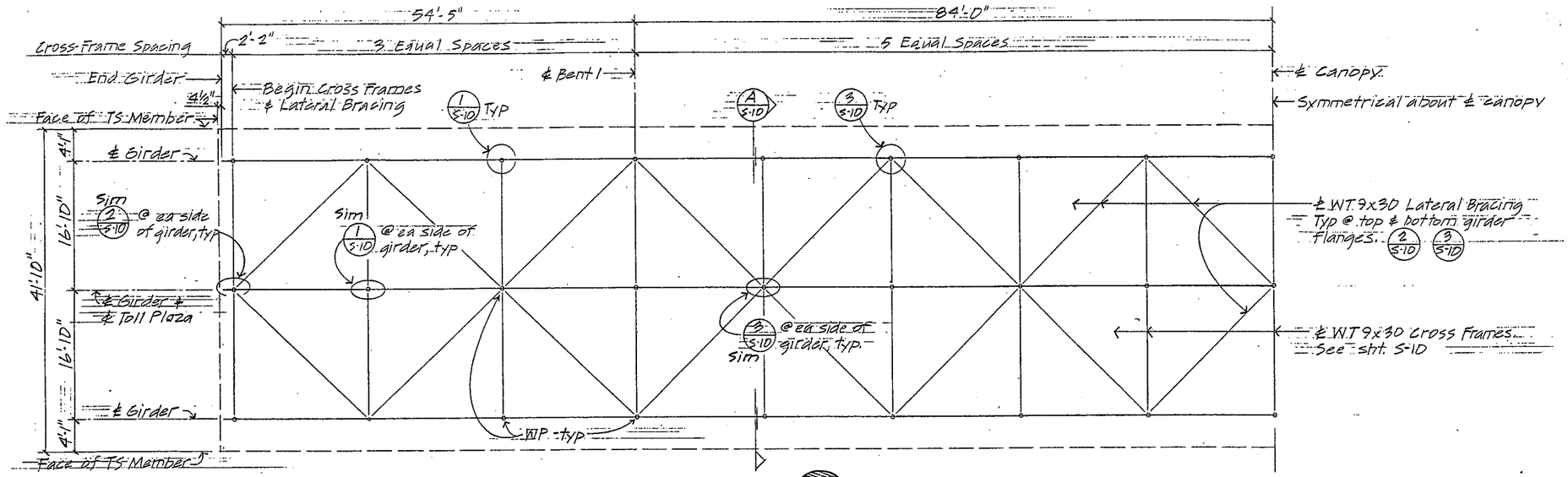

1 FRAMING PLAN
1/8" = 1'-0"

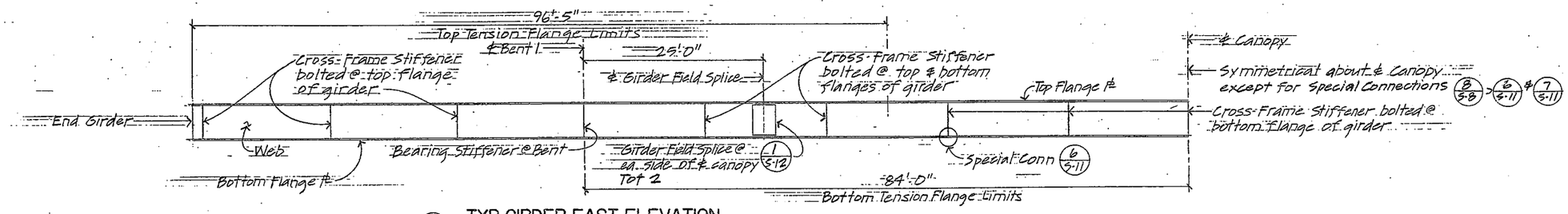

2 TYP GIRDER EAST ELEVATION
1/8" = 1'-0"

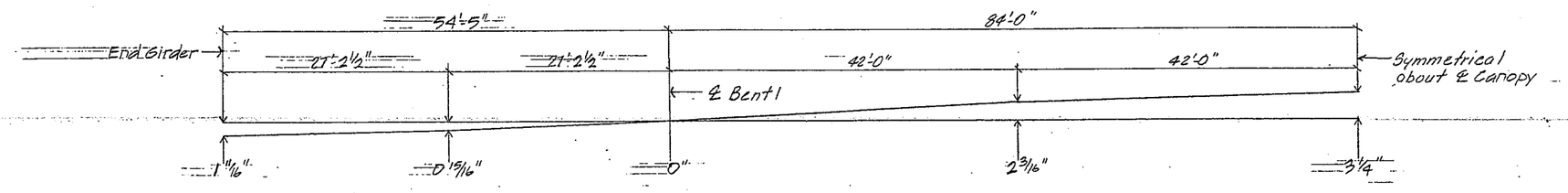

3 TYPICAL WEB CAMBER DIAGRAM
No Scale

REDUCED PLAN
USE SCALE BELOW
0 1 2 3
3 INCHES ON ORIGINAL PLAN

NOTES:

1) fy = 50,000 psi FOR GIRDER WEB PLATES, FLANGE PLATES, STIFFENERS AND SPLICE PLATES.
fy = 36,000 psi FOR LATERAL BRACING, CROSS FRAMES AND T-GUSSETS.

2) THE CONTRACTOR SHALL SUBMIT TO THE ENGINEER ALL ERECTION-ASSEMBLY PROCEDURES AND SEQUENCES FOR STEEL GIRDERS, CROSS FRAMES, LATERAL BRACING, TS FRAMING FOR SIDES AND SIGN SUPPORTS, ROOF PURLINS, STEEL JOISTS, SOFFIT PURLINS, METAL ROOF DECKING, METAL PANELS FOR SIDES AND SOFFIT, ETC.

3) CANOPY ERECTION PROCEDURES SHALL NOT IMPOSE LOADS ON (E) UNDERGROUND FACILITIES AND (E) CONCRETE APPROACH SLABS THAT EXCEED THE LOAD-CARRYING CAPACITY OF THOSE FACILITIES OR SLABS. FOR LOAD-CARRYING CAPACITY AND LIMITS OF (E) UNDERGROUND FACILITIES AND (E) CONCRETE APPROACH SLABS SEE SHEET S-15.

4) THE CONTRACTOR SHALL VERIFY ALL DEPENDENT DIMENSIONS IN THE FIELD BEFORE ORDERING OR FABRICATING ANY MATERIAL.

	By	Checked
DESIGN	DECCHIA 7/86	Don Fukushima 8/86
DETAILS	SF Bidwell/JS 7-86	Don Fukushima 8/86
QUANTITIES		

State of CALIFORNIA DEPARTMENT OF TRANSPORTATION

DIVISION OF STRUCTURES
STRUCTURE DESIGN
DECCHIA (PROJECT ENGINEER) C32049 (REGISTERED CIVIL ENGINEER NO.)

BRIDGE NO. 33M-5785
POST MILE 2.0-2.1

SFOBB TOLL PLAZA CANOPY
GIRDER PLAN & DETAILS

SHEET S-9

CU 04334
EA 003181

ORIGINAL SCALE IN INCHES FOR REDUCED PLANS 0 1 2 3

Disregard prints bearing earlier revision dates

REVISION DATES (PRELIMINARY STAGE ONLY) 1/19/88

SHEET 9 OF 18

...OS 0S0 2139 A (5/86)

DIST.	COUNTY	ROUTE	POST MILES TOTAL PROJECT	SHEET NO.	TOTAL SHEETS
04	Ala	80	2.0	35	68

REGISTERED ENGINEER - CIVIL
1-25-88
PLANS APPROVAL DATE

REGISTERED PROFESSIONAL ENGINEER C L PEARSON No. C13175 Exp. 3/31/89 CIVIL STATE OF CALIFORNIA

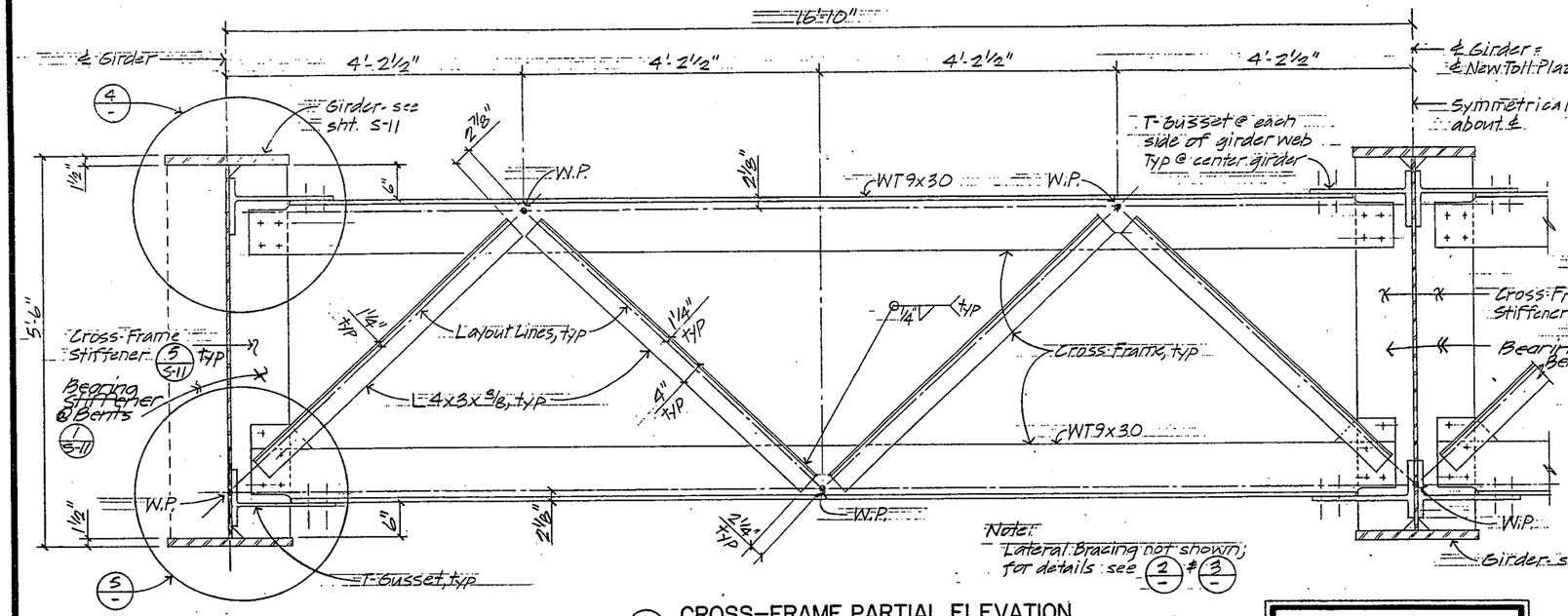

A CROSS-FRAME PARTIAL ELEVATION
1" = 1'-0"

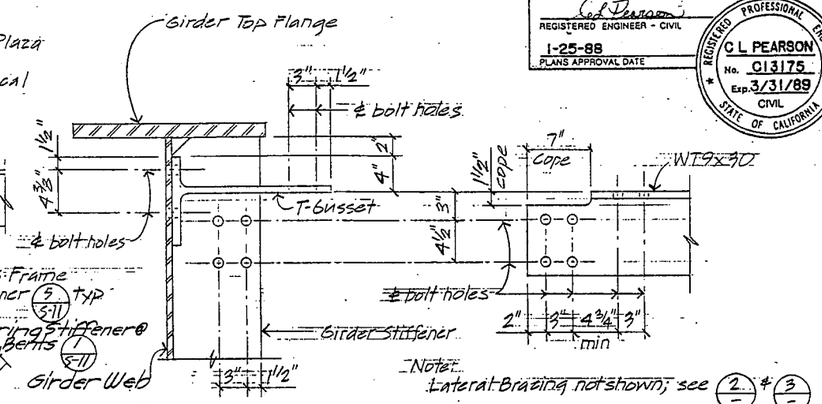

4 CROSS-FRAME/GIRDER CONN DETAIL
1½" = 1'-0"

REDUCED PLAN
USE SCALE BELOW
0 1 2 3
3 INCHES ON ORIGINAL PLAN

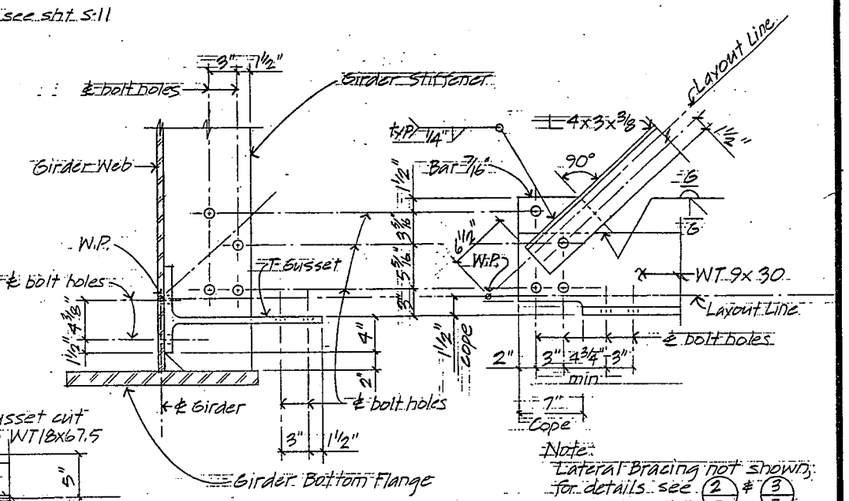

5 CROSS-FRAME/GIRDER CONN DETAIL
1½" = 1'-0"

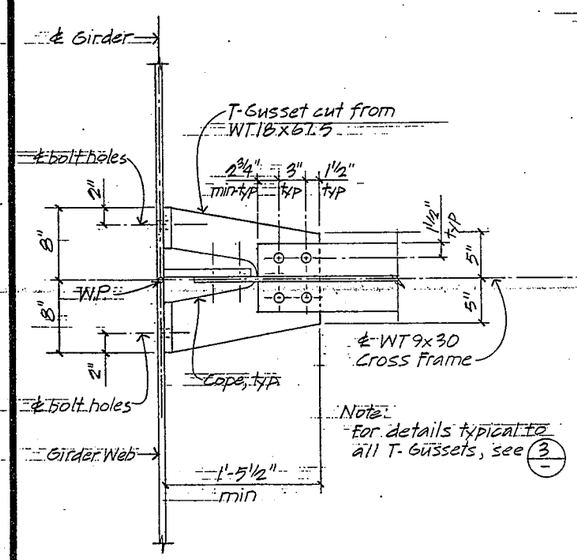

1 T-GUSSET DETAIL
1½" = 1'-0"

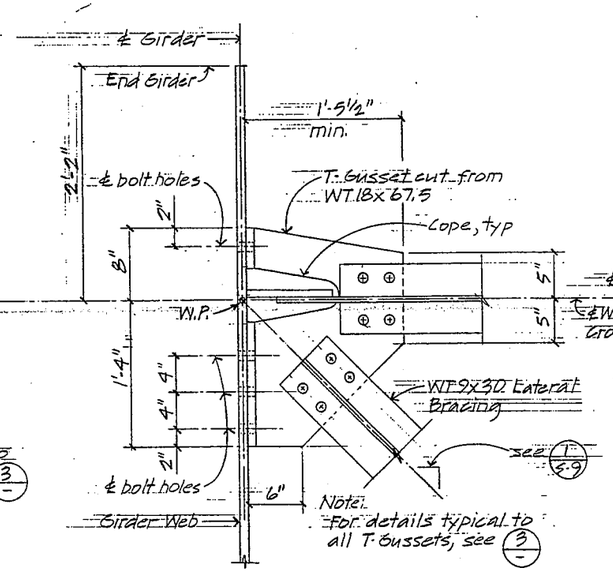

2 T-GUSSET DETAIL
1½" = 1'-0"

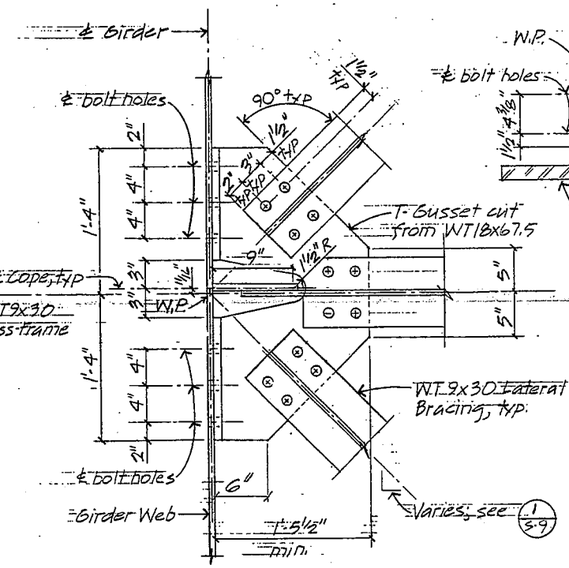

3 T-GUSSET DETAIL
1½" = 1'-0"

Note:
1. All Bolts are 7/8" ϕ galv. High Strength bolts w/ galv. washer type Direct Tension Indicators. Bolt holes are 15/16" ϕ unless otherwise noted.

2) DETAILS (1/-), (2/-) & (3/-) SHOW BOTTOM T-GUSSETS AT WEST GIRDER. T-GUSSETS AT EAST GIRDER AND CENTER GIRDER ARE SIMILAR TO WEST GIRDER. TOP T-GUSSETS ARE SIMILAR TO BOTTOM T-GUSSETS.

NOTE:

THE CONTRACTOR SHALL VERIFY ALL DEPENDENT DIMENSIONS IN THE FIELD BEFORE ORDERING OR FABRICATING ANY MATERIAL.

35

	By	Checked	
DESIGN	DECCHIA 7/86	Don Fukushima	8/86
DETAILS	SF Bidwell 7-86	Don Fukushima	8/86
QUANTITIES			

State of CALIFORNIA DEPARTMENT OF TRANSPORTATION

DIVISION OF STRUCTURES
STRUCTURE DESIGN
DECCHIA C32049
PROJECT ENGINEER REGISTERED CIVIL ENGINEER NO.

BRIDGE NO. 33M5785
POST MILE 2.0-2.1

SFOBB TOLL PLAZA CANOPY
GIRDER CROSS-FRAME BRACING DETAILS

SHEET S-10

DS 050 2139A (5/86)

ORIGINAL SCALE IN INCHES FOR REDUCED PLANS 0 1 2 3

CU 04334
EA 003181

Disregard prints bearing earlier revision dates

REVISION DATES (PRELIMINARY STAGE ONLY)

SHEET 10 OF 18

DIST.	COUNTY	ROUTE	POST MILES TOTAL PROJECT	SHEET NO.	TOTAL SHEETS
04	Ala	80	2.0	36	68

REGISTERED ENGINEER - CIVIL
1-25-88
PLANS APPROVAL DATE

REGISTERED PROFESSIONAL ENGINEER C L PEARSON No. C13175 Exp. 3/31/89 CIVIL STATE OF CALIFORNIA

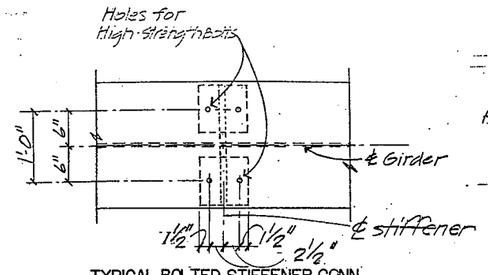

2A TYPICAL BOLTED STIFFENER CONN AT TOP AND/OR GIRDER BOT FLANGE
1"=1'-0"

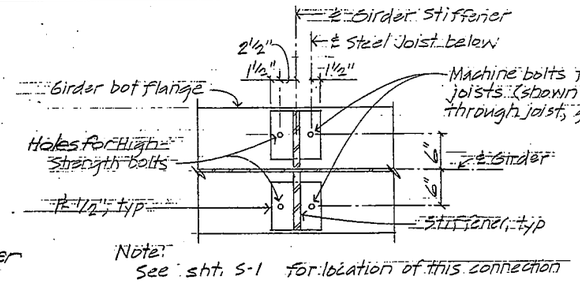

Note:
See sht. S-1 for location of this connection

6 BOLTED STIFFENER CONN AT GIRDER BOT FLANGE
1"=1'-0"

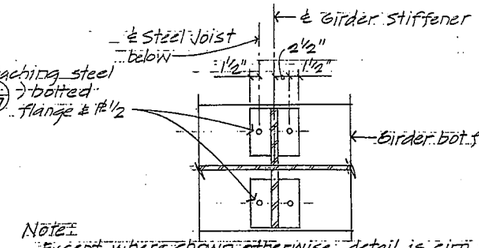

Note:
Except where shown otherwise, detail is sim. to (6/-)
See sht. S-1 for location of this connection.
for conn at girder top flange at this location, see (8/S-8)

7 BOLTED STIFFENER CONN AT GIRDER BOT FLANGE
1"=1'-0"

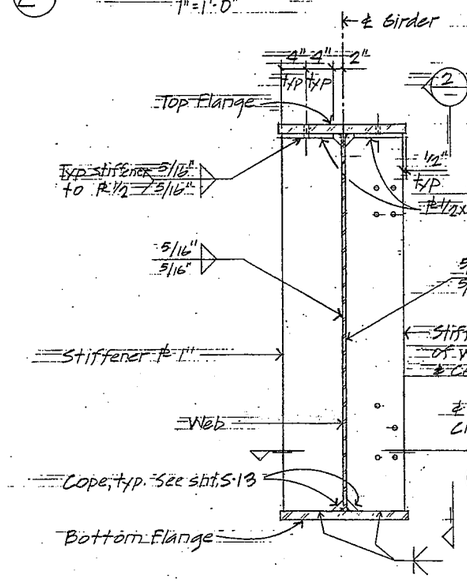

1 BEARING STIFFENER AT BENTS
1"=1'-0"

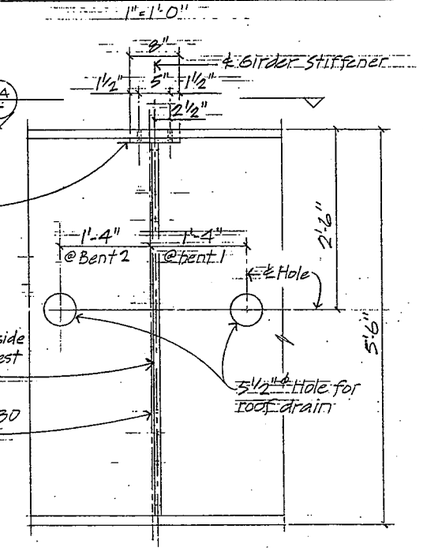

2 ELEVATION AT BENTS
1"=1'-0"

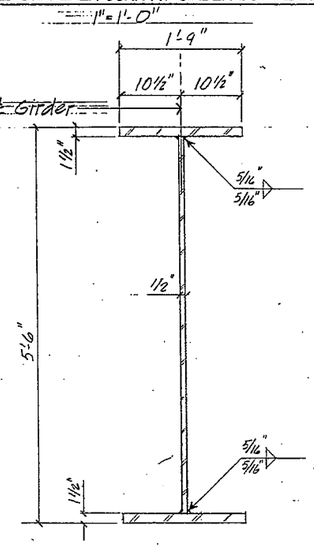

4 TYPICAL SECTION
1"=1'-0"

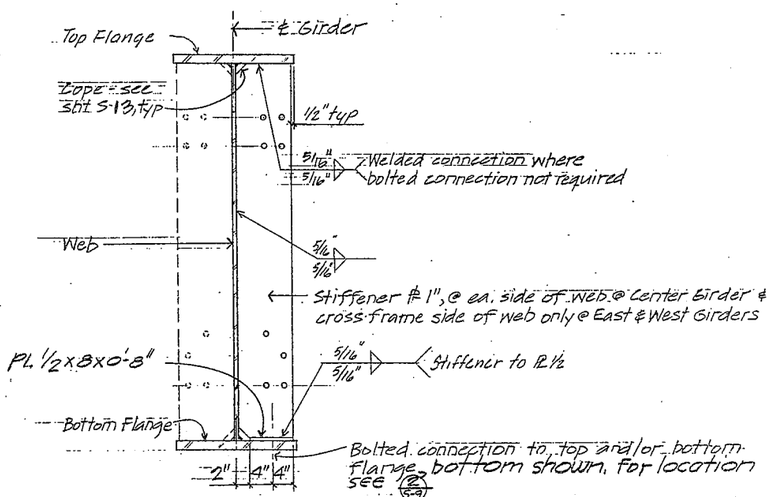

5 TYPICAL CROSS-FRAME STIFFENER
1"=1'-0"

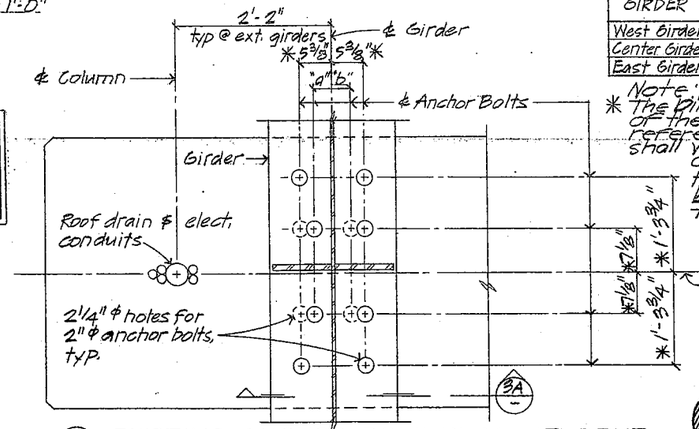

GIRDER	DIMENSION "a"	DIMENSION "b"
West Girder	3" *	5 3/8 *
Center Girder	5 3/8 *	5 3/8 *
East Girder	5 3/8 *	3" *

Note:
* The dimensions shown for location of the anchor bolts are for reference only. The contractor shall verify the location of the anchor bolts by field measurements before drilling holes in the bottom girder flange

3 EXISTING ANCHOR BOLT PLAN AT BENT
1"=1'-0"

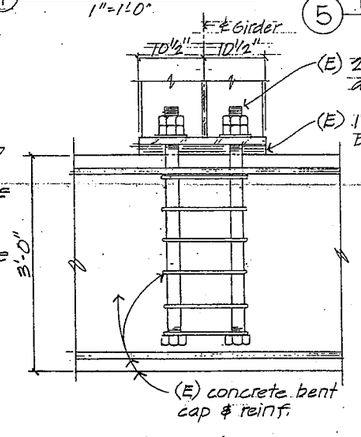

3A SECTION
1"=1'-0"

REDUCED PLAN
USE SCALE BELOW
0 1 2 3
3 INCHES ON ORIGINAL PLAN

NOTES:

1. All bolts are 7/8" ϕ galvanized high-strength bolts with galv. washer type direct tension indicators. Bolt holes are 15/16" ϕ unless otherwise indicated.
2. See shts. S-7 & S-8 for roof purlin & steel joist connection details not shown.

NOTE:
THE CONTRACTOR SHALL VERIFY ALL DEPENDENT DIMENSIONS IN THE FIELD BEFORE ORDERING OR FABRICATING ANY MATERIAL.

	By	Checked
DESIGN	LDECCHIA 7/86	Dan Fukushima 8/86
DETAILS	GF Bidwell/JS 7-86	Dan Fukushima 8/86
QUANTITIES		

State of CALIFORNIA DEPARTMENT OF TRANSPORTATION

DIVISION OF STRUCTURES
STRUCTURE DESIGN
LDECCHIA C32049
PROJECT ENGINEER REGISTERED CIVIL ENGINEER NO.

BRIDGE NO. 33M5785
POST MILE 2.0-2.1

SFOBB TOLL PLAZA CANOPY
GIRDER DETAILS NO 1

SHEET S-11

CU 04334
EA 003181

ORIGINAL SCALE IN INCHES FOR REDUCED PLANS 0 1 2 3

Disregard prints bearing earlier revision dates

REVISION DATES (PRELIMINARY STAGE ONLY) 1/19/88

SHEET 11 OF 18

DS-050 2139 A (5/86)

DIST.	COUNTY	ROUTE	POST MILES TOTAL PROJECT	SHEET NO.	TOTAL SHEETS
04	Ala	80	2.0	37	68

C L Pearson
REGISTERED ENGINEER - CIVIL
1-25-88
PLANS APPROVAL DATE

REGISTERED PROFESSIONAL ENGINEER
C L PEARSON
No. C13175
Exp. 3/31/89
CIVIL
STATE OF CALIFORNIA

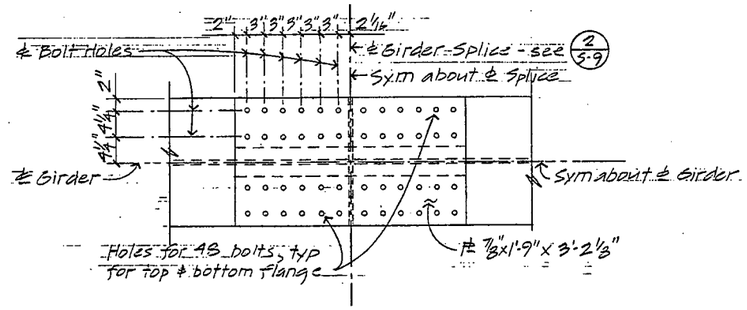

1A TOP VIEW
1"=1'-0"

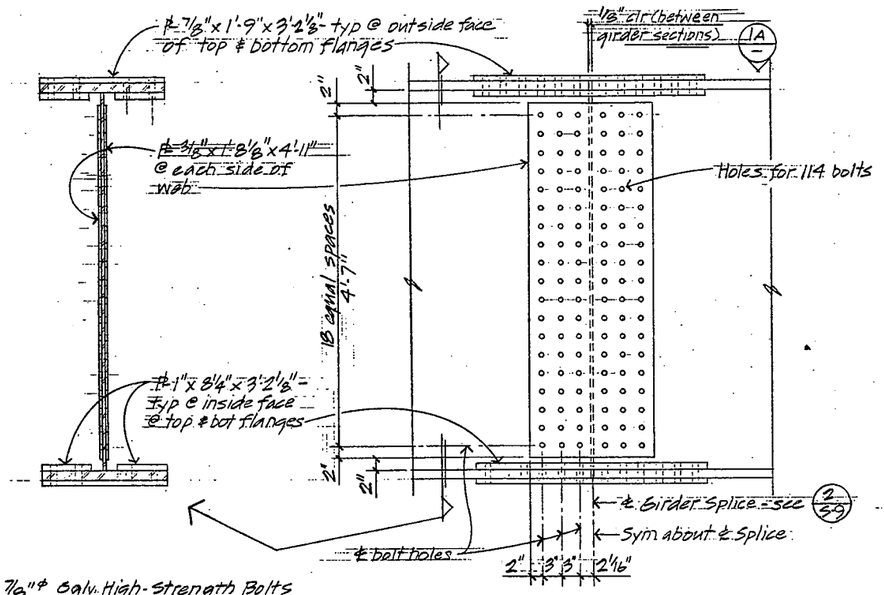

NOTES:
1) All bolts are 7/8"ϕ Galv. High-Strength Bolts with galv. washer type direct tension indicators. Bolt holes are 15/16"ϕ unless noted otherwise
2) For welded field splice alternative, see shts S-13 and S-14

1 BOLTED GIRDER FIELD SPLICE
1"=1'-0"

REDUCED PLAN
USE SCALE BELOW
0 1 2 3
3 INCHES ON ORIGINAL PLAN

NOTE:

THE CONTRACTOR SHALL VERIFY ALL DEPENDENT DIMENSIONS IN THE FIELD BEFORE ORDERING OR FABRICATING ANY MATERIAL.

37

DESIGN	By RPECCHIA 7/86	Checked Don Fukuhara 8/86	
DETAILS	By GF Bidwell 7-86	Checked Don Fukuhara 8/86	
QUANTITIES	By	Checked	

State of CALIFORNIA DEPARTMENT OF TRANSPORTATION

DIVISION OF STRUCTURES
STRUCTURE DESIGN
RPECCHIA C32049
PROJECT ENGINEER REGISTERED CIVIL ENGINEER NO.

BRIDGE NO. 33M5785
POST MILE 2.0-2.1

SFOBB TOLL PLAZA CANOPY
GIRDER DETAILS NO 2

SHEET S-12

05 D139 (Rev 6/85)

ORIGINAL SCALE IN INCHES FOR REDUCED PLANS 0 1 2 3

CU 04334
WO 003181

Disregard prints bearing earlier revision dates

REVISION DATES (PRELIMINARY STAGE ONLY)
1/15/86

SHEET 12 OF 18

86 37423

DIST.	COUNTY	ROUTE	POST MILES TOTAL PROJECT	SHEET NO.	TOTAL SHEETS
04	Ala	80	2.0	38	68

REGISTERED ENGINEER - CIVIL
1-25-88
PLANS APPROVAL DATE

REGISTERED PROFESSIONAL ENGINEER
C L. PEARSON
No. C13175
Exp. 3/31/89
CIVIL
STATE OF CALIFORNIA

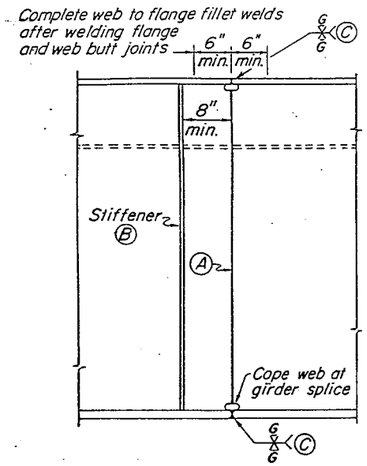

GIRDER SPLICE

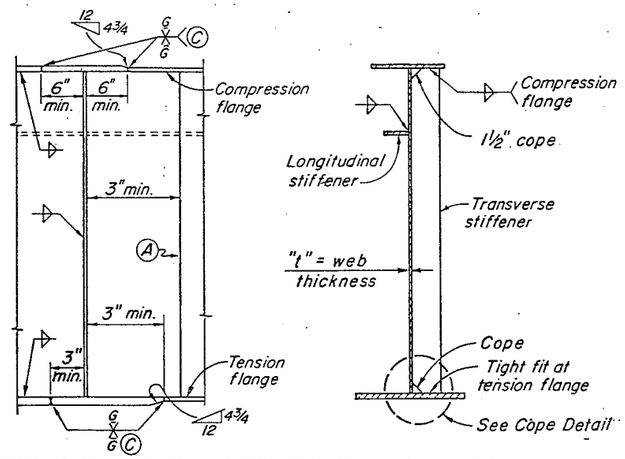

ASSEMBLY AND FABRICATION DETAILS

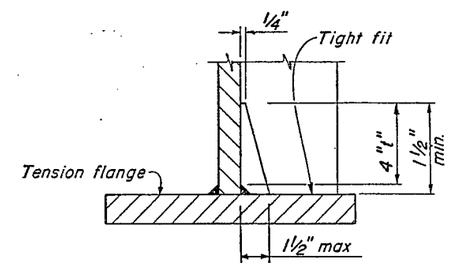

COPE DETAIL

1

2

REDUCED PLAN
USE SCALE BELOW
0 1 2 3
3 INCHES ON ORIGINAL PLAN

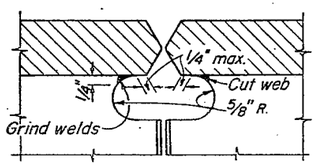

WEB COPE AT GIRDER SPLICE

NOTE: Alternative girder splices will be permitted subject to approval by the Engineer.

(A) Web butt joints shall be full penetration groove welds. All weld areas on the exterior face of exterior girders shall be ground flush. Where welds on a girder interfere with longitudinal stiffeners, the weld areas shall be ground flush.

Under full dead load and deck shrinkage, as shown on the camber diagram, girder ends and bearing stiffeners shall be vertical except they may be normal to grade for grades less than 2 percent.

(B) Stiffeners adjacent to a field splice shall be field welded.

(C) Grind all surfaces flush on tension flanges.
Grind all surfaces flush on compression flanges when required for NDI.
Grind all exterior surfaces flush on all bottom compression flanges.

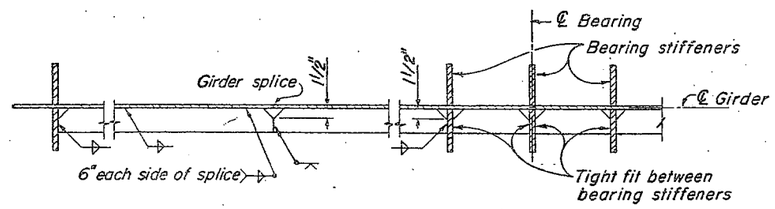

LONGITUDINAL STIFFENER DETAILS

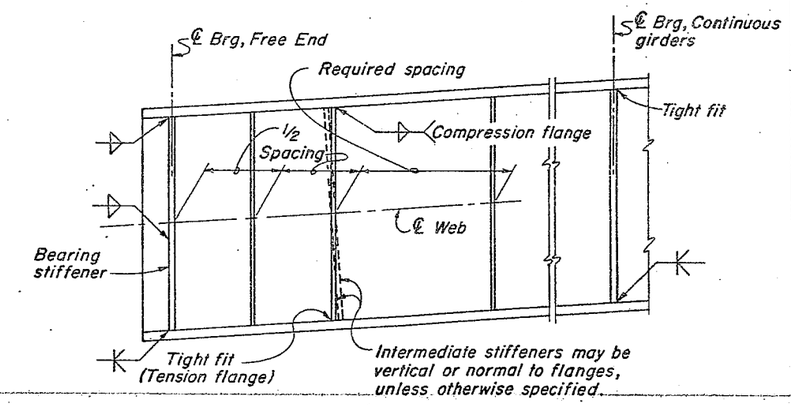

TRANSVERSE STIFFENERS

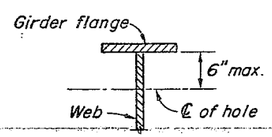

1" max. diameter hole at 4'± min. spacing to be used for falsework support when specified by the Contractor. Contractor to determine location, size and spacing.

2" max. diameter hole to be drilled where lighting conduit passes through girder web. For location and size of hole see "Lighting Plan."

HOLES FOR CONDUIT AND FALSEWORK

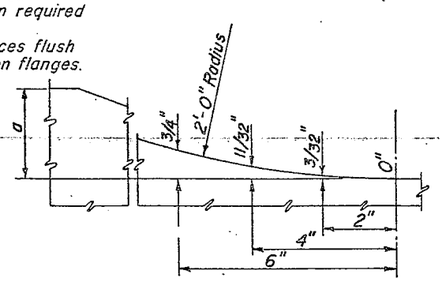

DETAIL OF CUT

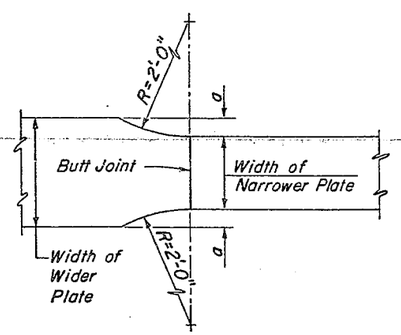

TRANSITION OF WIDTH

FLANGE TRANSITION DETAIL

STANDARD DRAWING

FILE No. XS-16-62	DESIGN	By R.	Checked	Approval Recommended By
DRAWING DATE REVISED	DETAILS	By R.C. Blechinger	Checked	DESIGN SUPERVISOR
	SUBMITTED BY	P.C. Wan		REGISTERED CIVIL ENGINEER NUMBER 17989

1 Signature block revised.
2 Detail removed.

State of CALIFORNIA
DEPARTMENT OF TRANSPORTATION

STRUCTURES-DESIGN
PROJECT ENGINEER L. Pecchia C32049

BRIDGE No. 33M5785
POST MILE 2.0-2.1

SFOBB TOLL PLAZA CANOPY
STEEL GIRDER DETAILS

SHEET S-13

DS 0147

ORIGINAL SCALE IN INCHES FOR REDUCED PLANS 0 1 2 3

CU 04334
WO 003181

Disregard prints bearing earlier revision dates

REVISION DATES (PRELIMINARY STAGE ONLY)

SHEET 13 OF 18

DIST.	COUNTY	ROUTE	POST MILES TOTAL PROJECT	SHEET NO.	TOTAL SHEETS
04	Ala	80	2.0	39	68

1

REGISTERED ENGINEER - CIVIL

1-25-88

PLANS APPROVAL DATE

REGISTERED PROFESSIONAL ENGINEER C L PEARSON No. C13175 Exp. 3/31/89 CIVIL STATE OF CALIFORNIA

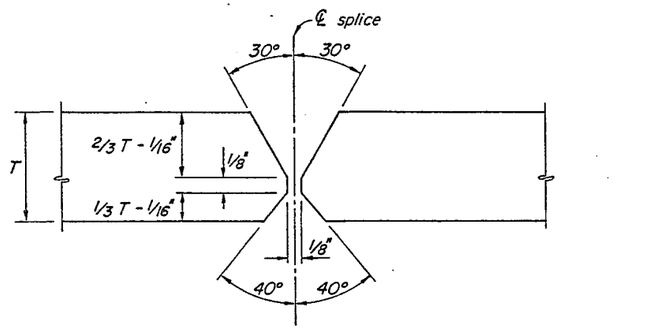

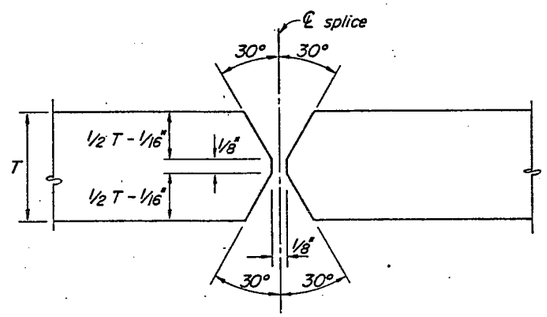

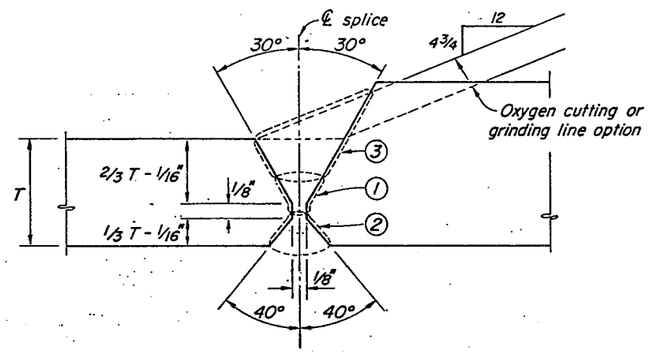

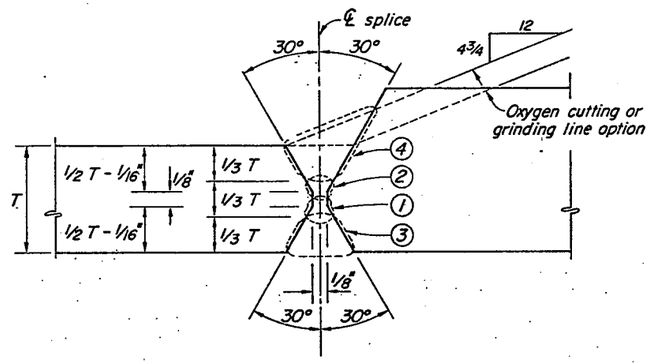

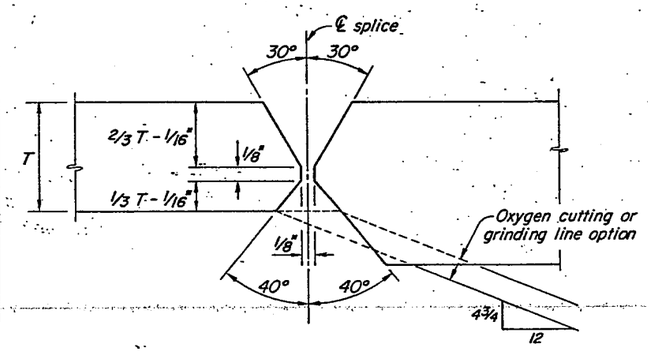

1/3 - 2/3 T FLANGE SPLICE

Joint Limitation - Min. T=1" max. Unlimited

TYPICAL WELD SEQUENCE INDICATED

1. Weld passes to 1/3 thickness of thinnest plate.
2. Back gouge and weld complete.
3. Complete weld.

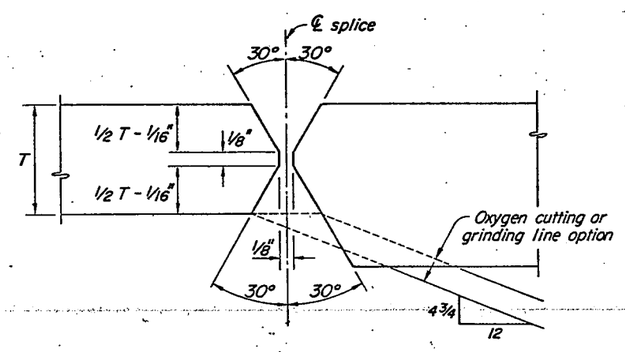

1/2 T FLANGE SPLICE

Joint Limitation - Unlimited

TYPICAL WELD SEQUENCE INDICATED

1. Weld passes to 1/6 thickness of thinnest plate.
2. Back gouge and weld.
3. Complete weld.
4. Complete weld.

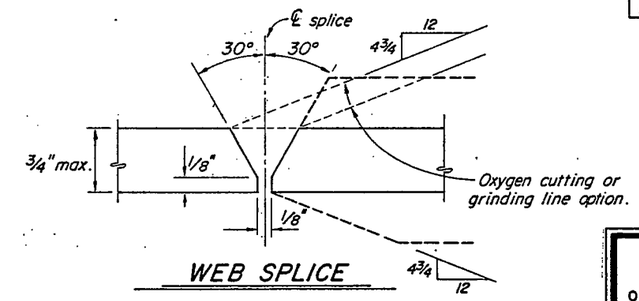

WEB SPLICE

REDUCED PLAN
USE SCALE BELOW
0 1 2 3
3 INCHES ON ORIGINAL PLAN

NOTES

1. All groove welds shall have the root of the initial weld back gouged by either chipping or by air arc.
2. Prior to joining flanges to the web, the web and flange plates shall be fabricated in lengths at least equal to the length of the girder to be fabricated.
3. Welding to proceed continuously from one end of member to the other.
4. Distortion limits for flat side of welded joints shall not deviate from flatness by more than 3/16" in a length of 2 feet centered over the joint.
5. Method of supporting girders while girder splices are being made shall be shown on erection drawings.
6. Root openings shown are for manual shielded arc. Seal bead passes in 1/8" root openings with SMAW may be used prior to SAW or root openings may be zero with 1/4" root face for SAW.
7. Alternative welding details may be used when approved in writing by the Engineer.

GIRDER SPLICE WELDING SEQUENCE

1. Install bolts, clamps, wedges, guy lines, struts or other suitable devices to hold girder sections in alignment and in such a manner as to allow normal shrinkage movement in the girder splice weld.
2. Preheat flanges 12" in both directions from centerline of butt joint between 300°F and 400°F.
3. Weld girder flanges top and bottom complete maintaining preheat.
4. Hold preheat of flanges to 200°F minimum. Preheat web plate for 6" to 8" each side of centerline of the butt joint to a maximum of 200°F. Maintain the preheat and weld web butt joint. Sequence of web groove weld may be backstep, cascade or intermittent so as to balance the applied web heat to the heat of the flanges, thus minimizing the shrinkage stresses.
5. After completion of web groove weld the remaining fillet welds between web and flanges shall be completed.
6. Controlled cooling, as ordered by the Engineer, shall follow completion of girder splice welding.

39

STANDARD DRAWING

FILE No. XS-16-63	DESIGN	By	Checked	Approval Recommended By
DRAWING DATE REVISED	DETAILS	By E. Esquivez	Checked	DESIGN SUPERVISOR
	SUBMITTED BY			REGISTERED CIVIL ENGINEER NUMBER 7283

DH-05-D 147

1 Signature block revised.

ORIGINAL SCALE IN INCHES FOR REDUCED PLANS 0 1 2 3

State of CALIFORNIA DEPARTMENT OF TRANSPORTATION

STRUCTURES-DESIGN

PROJECT ENGINEER R. DECCHIA C32049

CU 04334
WO 003181

BRIDGE NO. 33M5785

POST MILE 2.0-2.1

SFOBB TOLL PLAZA CANOPY

GIRDER SPLICE WELDING DETAILS

Disregard prints bearing earlier revision dates

REVISION DATES (PRELIMINARY STAGE ONLY) 1/19/88

SHEET S-14

SHEET 14 OF 18

DIST.	COUNTY	ROUTE	POST MILES TOTAL PROJECT	SHEET NO.	TOTAL SHEETS
04	Ala	80	2.0	40	68

REGISTERED ENGINEER - CIVIL

1-25-88
PLANS APPROVAL DATE

REGISTERED PROFESSIONAL ENGINEER
C L PEARSON
No. C13175
Exp. 3/31/89
CIVIL
STATE OF CALIFORNIA

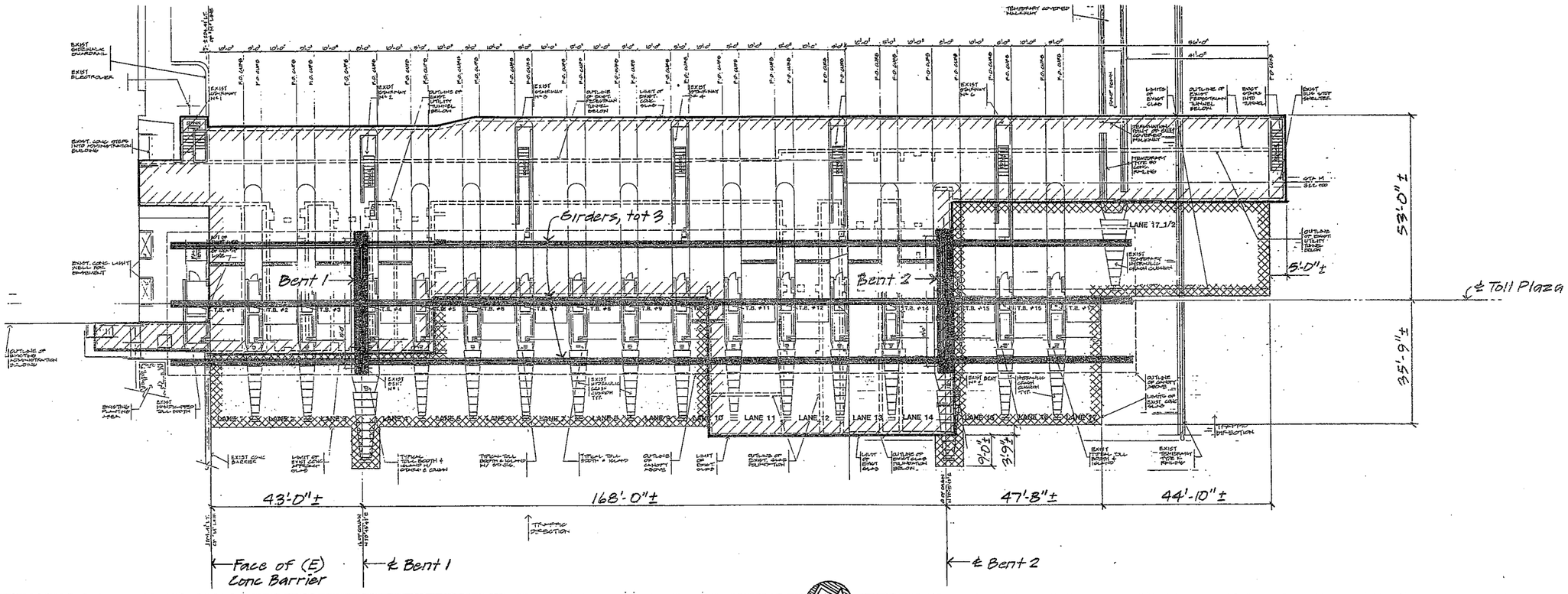

CANOPY ERECTION PLAN

1/16" = 1'-0"

REDUCED PLAN
USE SCALE BELOW
0 1 2 3
3 INCHES ON ORIGINAL PLAN

NOTE:

Indicates limits of (E) underground concrete facilities designed for H20-44 live loading

Indicates limits of (E) concrete approach slabs designed for HS20-44 live loading

NOTE:

THE CONTRACTOR SHALL VERIFY ALL DEPENDENT DIMENSIONS IN THE FIELD BEFORE ORDERING OR FABRICATING ANY MATERIAL

	By	Checked
DESIGN	Decchia 12/87	GF BIDWELL 12/87
DETAILS	GF BIDWELL 12/87	Decchia 12/87
QUANTITIES		

State of CALIFORNIA
DEPARTMENT OF TRANSPORTATION

DIVISION OF STRUCTURES
STRUCTURE DESIGN
Decchia C32049
PROJECT ENGINEER REGISTERED CIVIL ENGINEER NO.

BRIDGE NO. 33M5785
POST MILE 2.0 - 2.1

SFOBB TOLL PLAZA CANOPY
CANOPY ERECTION DETAILS

SHEET S-15

DS 050 2139A (5/86) BY 44432

ORIGINAL SCALE IN INCHES FOR REDUCED PLANS 0 1 2 3

CU 04334
EA 003181

Disregard prints bearing earlier revision dates

REVISION DATES (PRELIMINARY STAGE ONLY)

SHEET 15 OF 18

DIST.	COUNTY	ROUTE	POST MILES TOTAL PROJECT	SHEET NO.	TOTAL SHEETS
04	Ala	80	2.0	41	68

REGISTERED ENGINEER - CIVIL

1-25-88
PLANS APPROVAL DATE

REGISTERED PROFESSIONAL ENGINEER C L PEARSON No. C13175 Exp. 3/31/89 CIVIL STATE OF CALIFORNIA

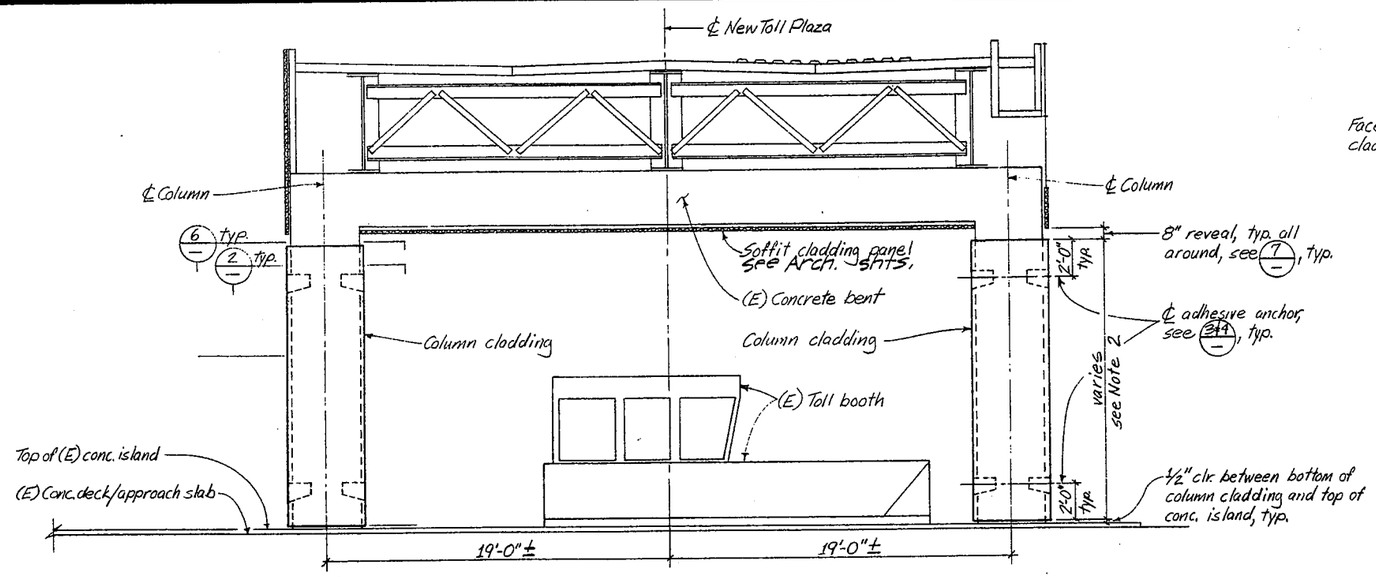

1 SOUTH ELEVATION AT BENT
¼" = 1'-0"

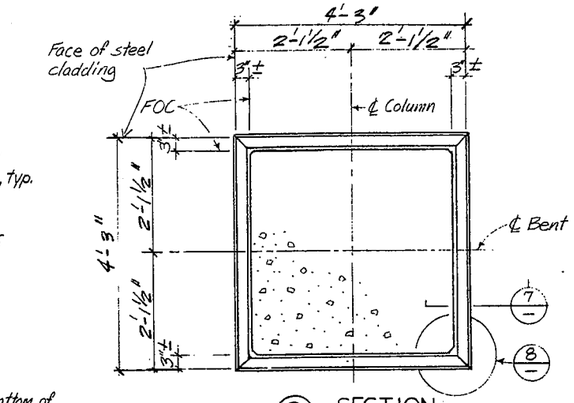

6 SECTION
¾" = 1'-0"

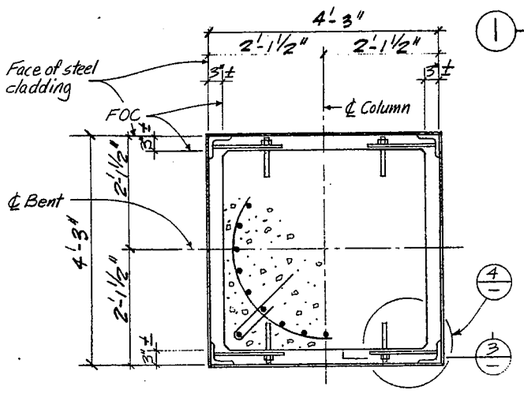

2 SECTION
¾" = 1'-0"

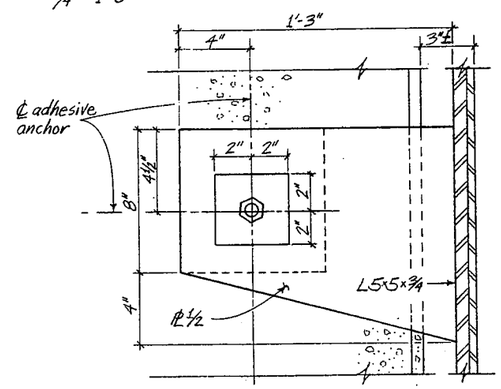

3 SECTION
3" = 1'-0"

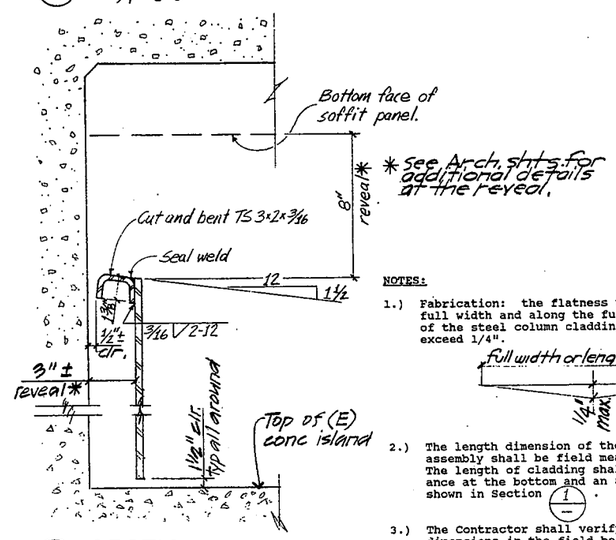

7 SECTION
3" = 1'-0"

NOTES:

1.) Fabrication: the flatness variation across the full width and along the full length of each side of the steel column cladding assembly shall not exceed 1/4".

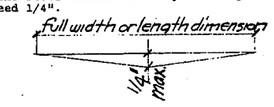

2.) The length dimension of the steel column cladding assembly shall be field measured at each column. The length of cladding shall provide 1/2" clearance at the bottom and an 8" reveal at the top as shown in Section 1.

3.) The Contractor shall verify all dependent dimensions in the field before ordering or fabricating any material.

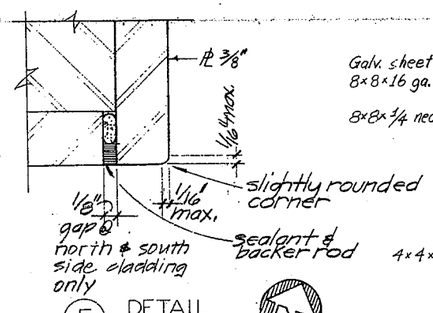

5 DETAIL
No Scale

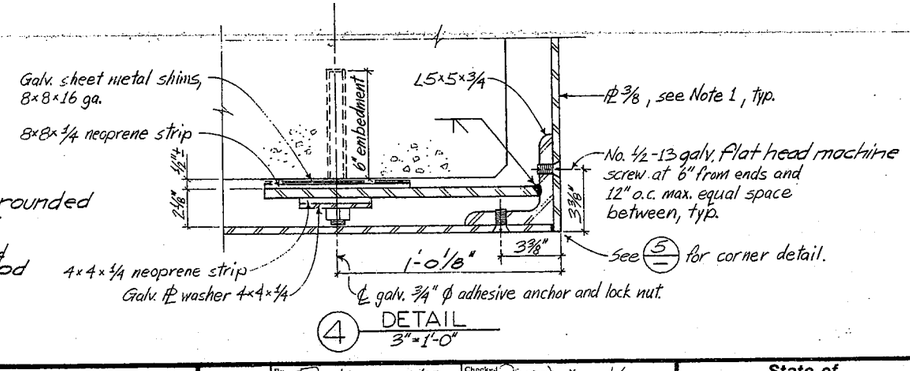

4 DETAIL
3" = 1'-0"

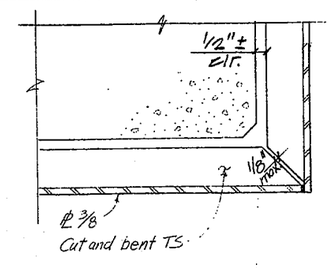

8 DETAIL
3" = 1'-0"

REDUCED PLAN
USE SCALE BELOW
0 1 2 3
3 INCHES ON ORIGINAL PLAN

NOTE:

THE CONTRACTOR SHALL VERIFY ALL DEPENDENT DIMENSIONS IN THE FIELD BEFORE ORDERING OR FABRICATING ANY MATERIAL.

	By		Checked
DESIGN	L Becchia	9/87	L A Bonham 1/88
DETAILS	L Becchia	9/87	L A Bonham 1/88
QUANTITIES			

State of CALIFORNIA DEPARTMENT OF TRANSPORTATION

DIVISION OF STRUCTURES
STRUCTURE DESIGN
L Becchia C32049
PROJECT ENGINEER REGISTERED CIVIL ENGINEER NO.

BRIDGE NO. 33M5785
POST MILE 2.0-2.1

SFOBB TOLL PLAZA CANOPY
COLUMN CLADDING DETAILS

SHEET S-16

CU 04334
EA 003181

Disregard prints bearing earlier revision dates

REVISION DATES (PRELIMINARY STAGE ONLY) 11/4/87 1/19/88

SHEET 16 OF 19

ORIGINAL SCALE IN INCHES FOR REDUCED PLANS 0 1 2 3

DS OSD 2139A (5/86) 87 44422

41

DIST.	COUNTY	ROUTE	POST MILES TOTAL PROJECT	SHEET NO.	TOTAL SHEETS
04	Ala	80	2.0	42	68

REGISTERED ENGINEER - CIVIL
1-25-88
PLANS APPROVAL DATE

PROFESSIONAL ENGINEER — REGISTERED — C L PEARSON — No. C13175 — Exp. 3/31/89 — CIVIL — STATE OF CALIFORNIA

REDUCED PLAN
USE SCALE BELOW
0 2 3
3 INCHES ON ORIGINAL PLAN

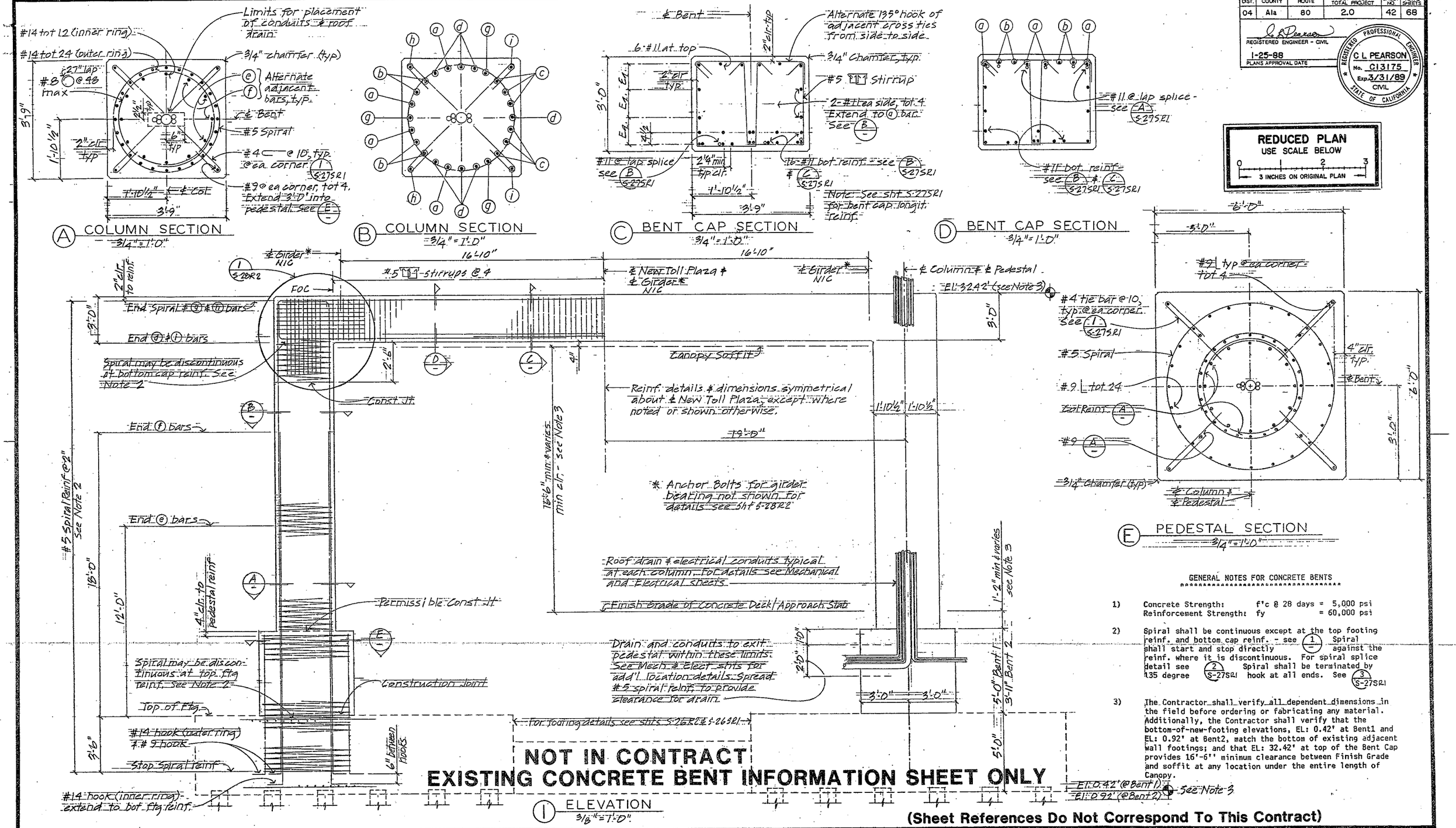

NOT IN CONTRACT
EXISTING CONCRETE BENT INFORMATION SHEET ONLY

(Sheet References Do Not Correspond To This Contract)

GENERAL NOTES FOR CONCRETE BENTS

1) Concrete Strength: f'c @ 28 days = 5,000 psi
Reinforcement Strength: fy = 60,000 psi

2) Spiral shall be continuous except at the top footing reinf. and bottom cap reinf. - see 1 Spiral shall start and stop directly against the reinf. where it is discontinuous. For spiral splice detail see 2 S-27SR1 Spiral shall be terminated by 135 degree hook at all ends. See 3 S-27SR1

3) The Contractor shall verify all dependent dimensions in the field before ordering or fabricating any material. Additionally, the Contractor shall verify that the bottom-of-new-footing elevations, EL: 0.42' at Bent1 and EL: 0.92' at Bent2, match the bottom of existing adjacent wall footings; and that EL: 32.42' at top of the Bent Cap provides 16'-6'' minimum clearance between Finish Grade and soffit at any location under the entire length of Canopy.

DESIGN	By DDT 7/83	Checked BK 9/83	
DETAILS	By KDECCHIA 6/86	Checked	
QUANTITIES	By SF Bidwell 5-86	Checked	

State of CALIFORNIA DEPARTMENT OF TRANSPORTATION

DIVISION OF STRUCTURES STRUCTURE DESIGN
KDECCHIA — PROJECT ENGINEER
C32049 — REGISTERED CIVIL ENGINEER NO.

BRIDGE NO. 33M5785
POST MILE 2.0-2.1

SFOBB TOLL PLAZA CANOPY
CANOPY BENT DETAILS I

SHEET S-17

DS OSD 2139 (2/86)

ORIGINAL SCALE IN INCHES FOR REDUCED PLANS 0 1 2 3

CU 04334
EA 003181

Disregard prints bearing earlier revision dates

REVISION DATES (PRELIMINARY STAGE ONLY) 1/19/88

SHEET 17 OF 18

DIST.	COUNTY	ROUTE	POST MILES TOTAL PROJECT	SHEET NO.	TOTAL SHEETS
04	Ala	80	2.0	43	68

REGISTERED ENGINEER - CIVIL
1-25-88
PLANS APPROVAL DATE

REGISTERED PROFESSIONAL ENGINEER C L PEARSON No. C13175 Exp. 3/31/89 CIVIL STATE OF CALIFORNIA

REDUCED PLAN
USE SCALE BELOW
0 1 2 3
3 INCHES ON ORIGINAL PLAN

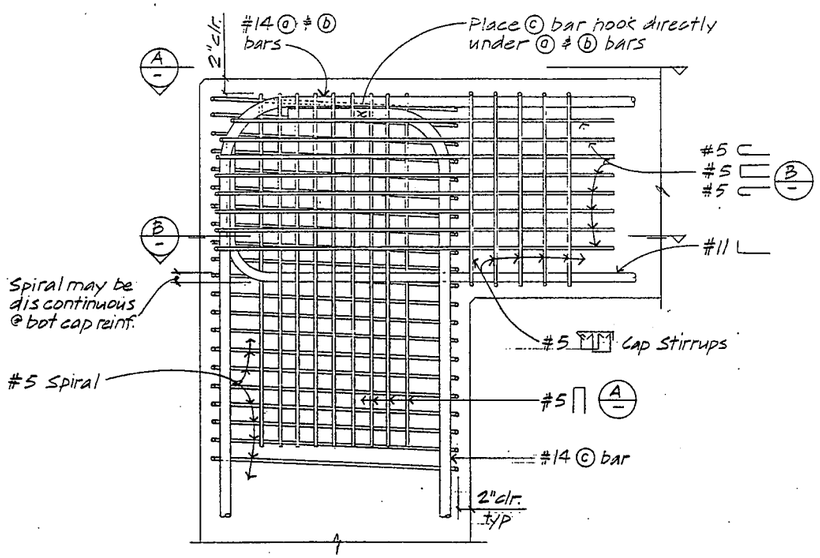

① COLUMN - BENT CAP REINF DETAIL
No Scale

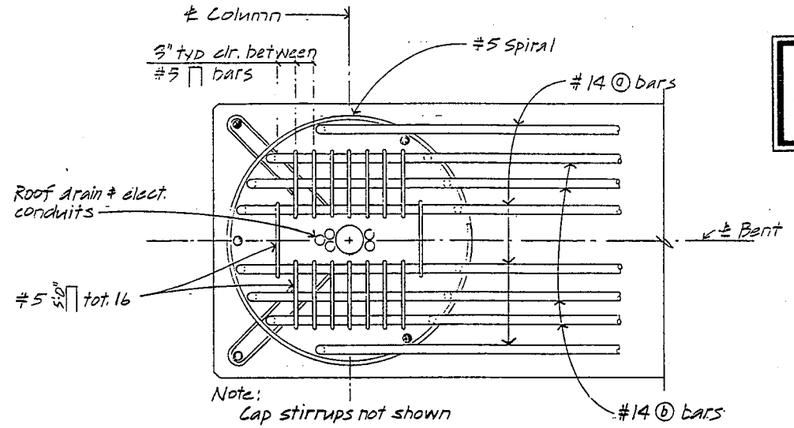

Ⓐ TOP CAP - COLUMN REINF
1" = 1'-0"

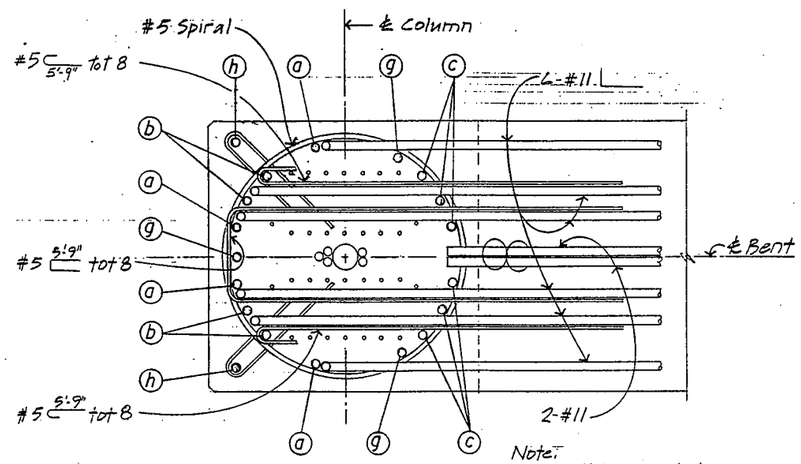

Ⓑ BOTTOM CAP - COLUMN REINF
1" = 1'-0"

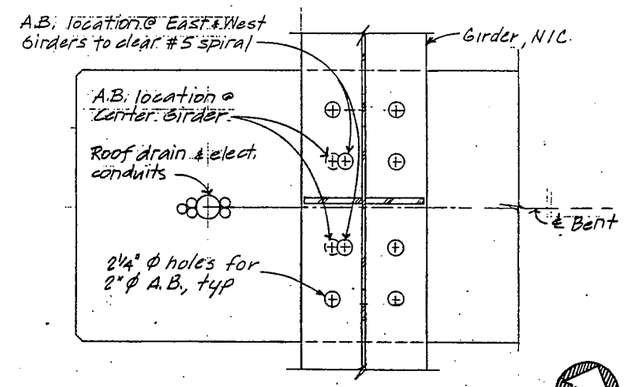

Ⓒ SECTION
1" = 1'-0"

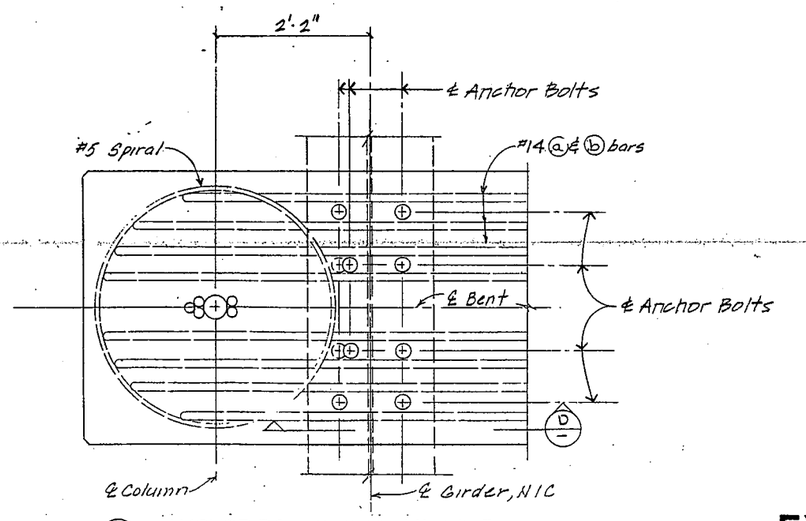

② ANCHOR BOLTS PLAN AT BENT
1" = 1'-0"

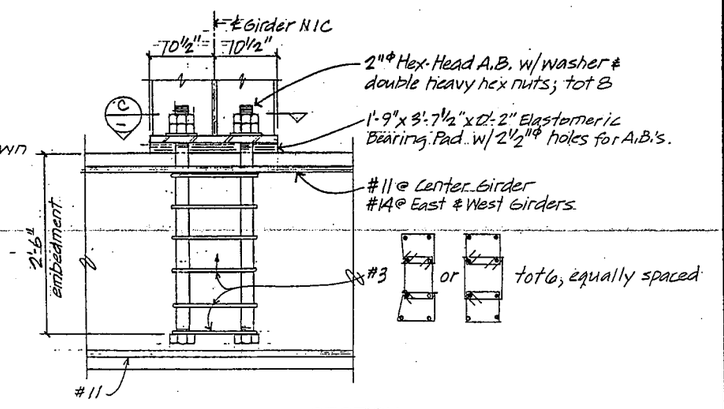

Ⓓ SECTION
1" = 1'-0"

NOT IN CONTRACT
EXISTING CONCRETE BENT INFORMATION SHEET ONLY

NOTE:
THE CONTRACTOR SHALL VERIFY ALL DEPENDENT DIMENSIONS IN THE FIELD BEFORE ORDERING OR FABRICATING ANY MATERIAL.

	By	Checked	
DESIGN	DOB 7/85 RBECCHIA 6/86	BK 7/85 Jeff Olson	6/86
DETAILS	BF Bidwell	Jeff Olson	6/86
QUANTITIES			

State of CALIFORNIA DEPARTMENT OF TRANSPORTATION

DIVISION OF STRUCTURES STRUCTURE DESIGN
RBECCHIA C32049
PROJECT ENGINEER REGISTERED CIVIL ENGINEER NO

BRIDGE NO. 33M-5785
POST MILE 2.0-2.1

SFOBB TOLL PLAZA CANOPY
CANOPY BENT DETAILS 2

SHEET S-18

73

DS OSD 2139 (2/86)

ORIGINAL SCALE IN INCHES FOR REDUCED PLANS 0 1 2 3

CU 04334
EA 003181

Disregard prints bearing earlier revision dates

REVISION DATES (PRELIMINARY STAGE ONLY) 1/19/88

SHEET 18 OF 18

DIST.	COUNTY	ROUTE	POST MILES TOTAL PROJECT	SHEET NO.	TOTAL SHEETS
04	Ala	80	2.0	44	68

REGISTERED ENGINEER - MECHANICAL

1-25-88
PLANS APPROVAL DATE

REGISTERED PROFESSIONAL ENGINEER
ALAN TORRES
No. 20155
Exp. 9-30-88
MECH.
STATE OF CALIFORNIA

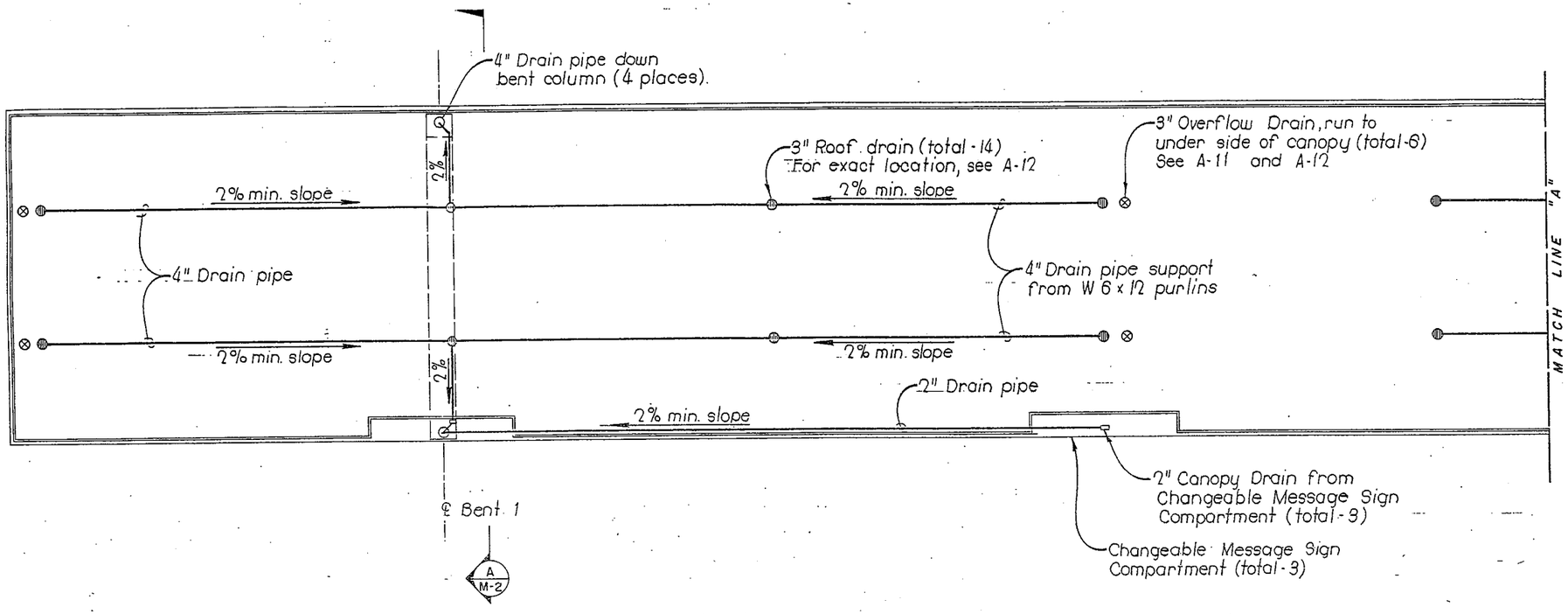

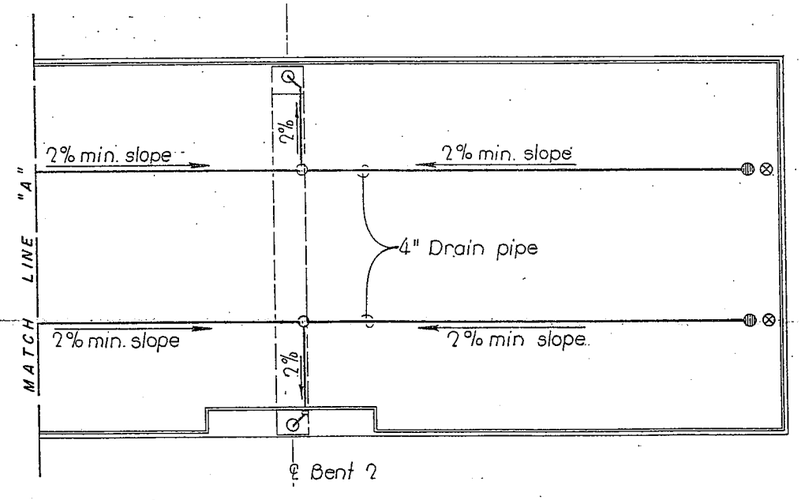

REDUCED PLAN
USE SCALE BELOW
0 1 2 3
3 INCHES ON ORIGINAL PLAN

CANOPY ROOF PLAN

SCALE : 1/8" = 1'-0"

APPROVED FIRE AND PANIC ONLY
JUN 3 1 1987
STATE FIRE MARSHAL COASTAL REGION

THIS DRAWING ACCURATE FOR MECHANICAL WORK ONLY

APPROVAL RECOMMENDED BY			
M17007 DESIGN SUPERVISOR REGISTERED MECHANICAL ENGINEER NUMBER	DESIGN	By E. A. Denny	Checked Dick Oxford
	DETAILS	By R. A. Sante 4/87	Checked E. A. Denny
	QUANTITIES	By E. A. Denny	Checked Dick Oxford

State of CALIFORNIA
DEPARTMENT OF TRANSPORTATION

DIVISION OF STRUCTURES
ELECTRICAL-MECHANICAL-SANITARY
Dick Oxford
PROJECT ENGINEER

BRIDGE NO. 33M5785
POST MILE 2.0-2.1

SFOBB TOLL PLAZA CANOPY
CANOPY DRAIN PLAN

SHEET M-1

DS OSD 2171 (2/86)

ORIGINAL SCALE IN INCHES FOR REDUCED PLANS 0 1 2 3

CU 04207
EA 003181

Disregard prints bearing earlier revision dates

REVISION DATES (PRELIMINARY STAGE ONLY)

SHEET OF

DIST.	COUNTY	ROUTE	POST MILES TOTAL PROJECT	SHEET NO.	TOTAL SHEETS
.04	Ala	80	2.0	45	68

Alan M Torres
REGISTERED ENGINEER - MECHANICAL

1-25-88
PLANS APPROVAL DATE

REGISTERED PROFESSIONAL ENGINEER
ALAN TORRES
No. 20155
Exp. 9-30-88
MECH.
STATE OF CALIFORNIA

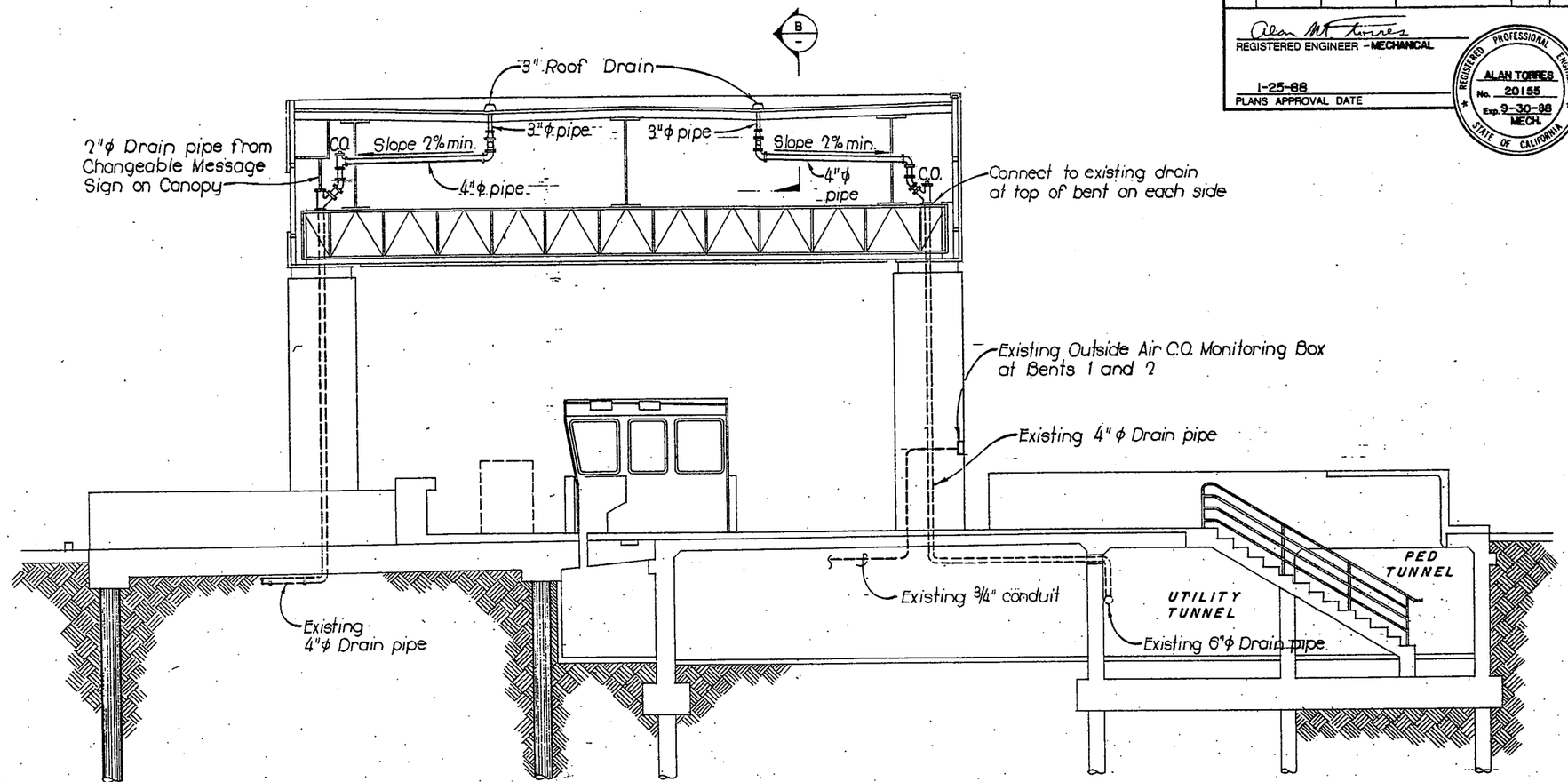

A SECTION
SCALE : 1/4" = 1'-0"

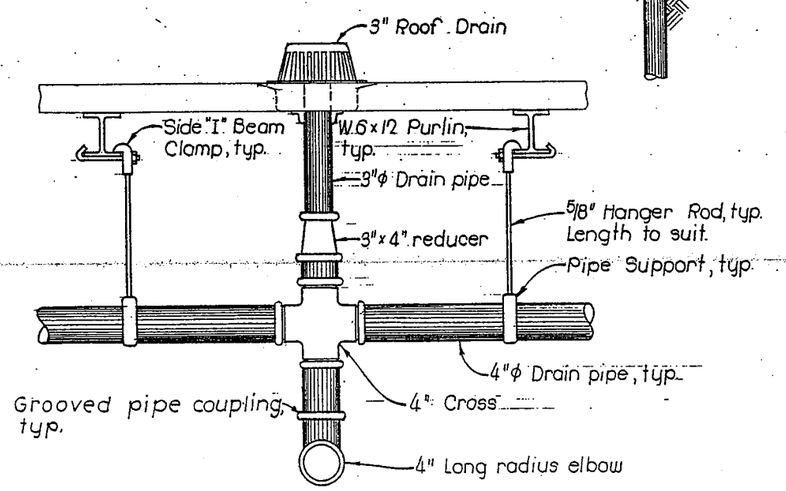

B SECTION
NO SCALE

REDUCED PLAN
USE SCALE BELOW
0 1 2 3
3 INCHES ON ORIGINAL PLAN

APPROVED FIRE AND PANIC ONLY
JUL 3 1 1987
STATE FIRE MARSHAL COASTAL REGION

THIS DRAWING ACCURATE FOR MECHANICAL WORK ONLY

DESIGN	By E.A. Denney	Checked Dick Oxford
DETAILS	By R.A. Sarte 4/87	Checked E.A. Denney
QUANTITIES	By E.A. Denney	Checked Dick Oxford

State of CALIFORNIA DEPARTMENT OF TRANSPORTATION

DIVISION OF STRUCTURES
ELECTRICAL-MECHANICAL-SANITARY
Dick Oxford
PROJECT ENGINEER

BRIDGE NO. 33M5785
POST MILE 2.0-2.1

SFOBB TOLL PLAZA CANOPY
TYPICAL SECTION AT BENTS

SHEET M-2

ORIGINAL SCALE IN INCHES FOR REDUCED PLANS 0 1 2 3

CU 04207
EA 003181

Disregard prints bearing earlier revision dates

REVISION DATES (PRELIMINARY STAGE ONLY) 4/14/87

SHEET OF

75

DS OSD 2171 (2/86)

DIST.	COUNTY	ROUTE	POST MILES TOTAL PROJECT	SHEET NO.	TOTAL SHEETS
04	Ala	80	2.0	46	68

Luis Batiza
ENGINEER

NO.

1-25-88
PLANS APPROVAL DATE

INDEX OF SHEETS

E-1 Index, General Notes and Abbreviations.
E-2 Project Notes, Legend and Symbols
E-3 Overhead Traffic Lights and Extinguishable Message Sign (EMS) Conduit and Conductors Block Diagram
E-4 Overhead Traffic Lights and Extinguishable Message Sign Conduit Layout in Canopy — East Elevation.
E-5 Special CMS and EMS Sign Mounting Details
E-6 Overhead Traffic Light and EMS Schematic Diagrams.
E-7 Overhead Traffic Light and Special CMS for Lane 1.
E-8 Extinguishable Message Signs Schematic Diagram.
E-9 Canopy Lighting
E-10 Canopy Down Lighting, EMS and CMS Details.
E-11 High Mast Lighting, CMS, Overhead Traffic Lights, and Extiguishable Message Sign Details.
E-12 CCTV System - One Line and block diagrams.
E-13 CCTV System - Power Supply and TRAC Details.
E-14 CCTV System - Canopy Details.
E-15 CCTV System - Toll Booths, Canopy and Administration Building.
E-16 CCTV System - monitor console station and CCTV cabinet.
E-17 CCTV System - Miscellaneous Details.
E-18 CCTV System - Administration Building Details
E-19 CCTV System - Canopy Roof Details.
E-20 CCTV System - Dispatchers office camera locations and overall conduit layout
E-21 CCTV System - Dispatchers office power panel, block diagram and one line diagram.
E-22 CCTV System - Dispatchers office - Maintenance Building
E-23 CCTV System - Dispatchers office - Miscellaneous Detail

ABBREVIATIONS

FOR OTHER ABBREVIATIONS, LEGENDS AND SYMBOLS, SEE E-2 AND STANDARD PLANS DATED JULY, 1984

19/C	19 Conductor Cable
SUB	Substation
Hg	Mercury
CKT	Circuit
Ø	Phase
P	Pole
HTR	Heater
PWR	Power
LC	Lane Console
G	Green (Lamp)
R	Red (Lamp)
pr.	Pair
DPDT	Double Pole Double Throw
SPST	Single Pole Single Throw
L_1, L_2, L_3	Phase Order

GENERAL NOTES

Dimensions shown for existing structures are taken from construction drawing. The contractor shall field verify and adjust all dimensions to fit existing conditions since minor variations are to be anticipated.

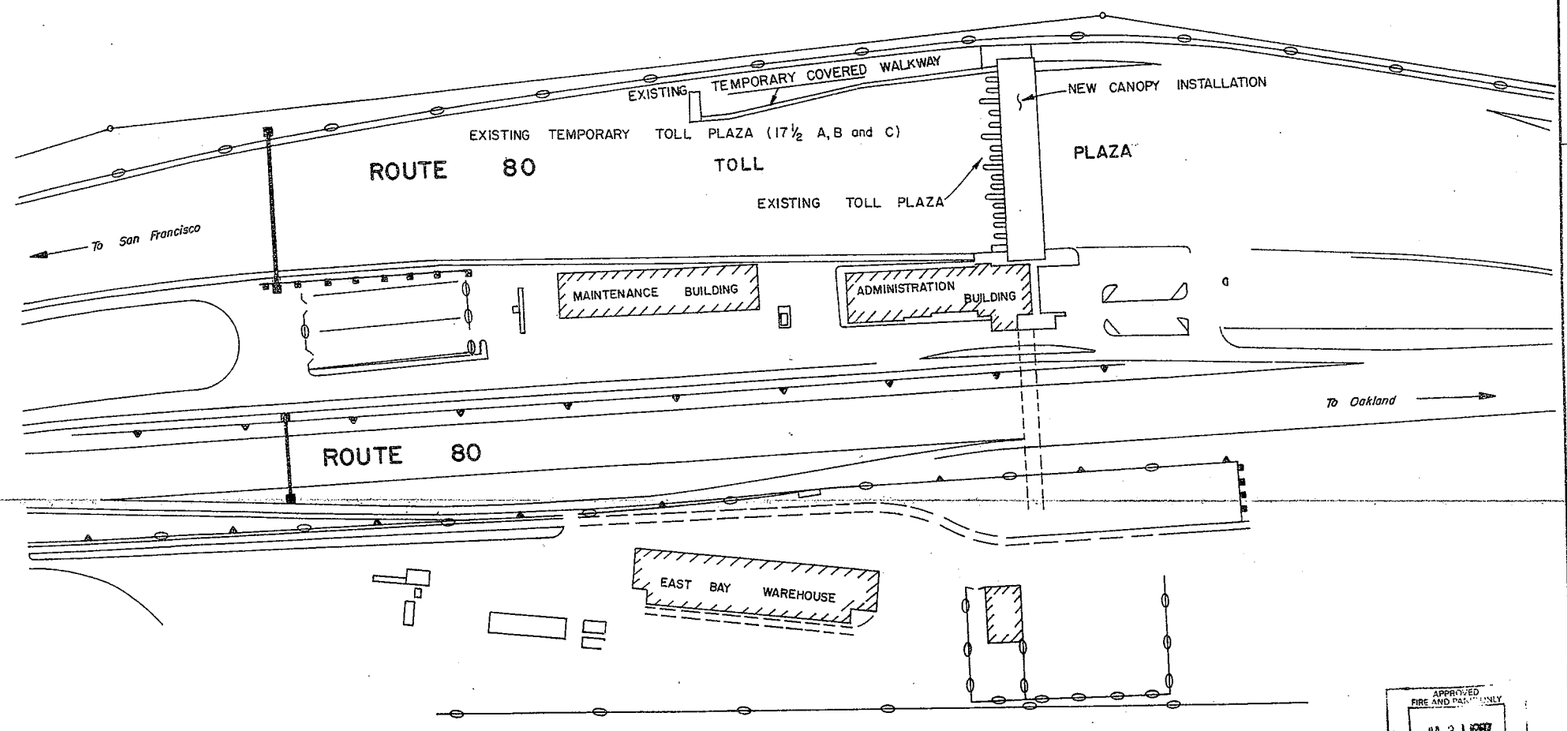

REDUCED PLAN
USE SCALE BELOW
0 1 2 3
3 INCHES ON ORIGINAL PLAN

APPLICABLE STANDARD PLANS

DATED JULY, 1984

ES - 1A
ES - 1B
ES - 3D
ES - 4C
ES - 6T
ES - 8
ES - 13
ES - 27A
ES - 27B

APPROVED FIRE AND PANIC ONLY
JUL 31 1987
STATE FIRE MARSHAL COASTAL REGION

INDEX, GENERAL NOTES AND ABBREVIATIONS

NO SCALE

E-1

DATE REVISED
DESIGNED BY
CHECKED BY
M. CHO

Caltrans

DC-OE-SPECIAL (10/86)

FOR REDUCED PLANS ORIGINAL SCALE IS IN INCHES 0 1 2 3

CU 04 334

EA 003181

DIST.	COUNTY	ROUTE	POST MILES TOTAL PROJECT	SHEET NO.	TOTAL SHEETS
04	Ala	80	2.0	47	68

Luis Batiza
ENGINEER

NO.

1-25-88
PLANS APPROVAL DATE

REDUCED PLAN
USE SCALE BELOW
0 1 2 3
3 INCHES ON ORIGINAL PLAN

LEGEND AND SYMBOLS

- Existing Pull Box, 16" × 10" × 5".
- Existing FD Junction Box with cast cover and gasket, except as noted.
- Vapor Tight Incandescent Wall Mounted Fixture with 100W lamp for utility tunnel, 150W for pedestrian tunnel.
- Receptacle - Line denotes number of outlets.
- Exposed Conduit
- Concealed Conduit. (Embedded in concrete wall or ceiling).
- (M) Sump pump motor.
- Conduit Riser toward observer.
- Conduit Riser away from observer.
- 4" Octagonal Junction Box embedded in ceiling.
- 4" Octagonal Junction Box exposed in ceiling.
- 20A, 120V. split-wired duplex floor outlet with isolated ground.
- [E] Emergency remote pushbuttonn with safety cover.
- [T] Thermostat for temperature alarm system.
- PB#3 8" × 8" × 6" pull box No. 3 with screw cover.
- Core hole in wall for new conduit.
- Flexible Conduit concealed.
- Flexible Conduit exposed.
- Conduit Stub.
- CMS Junction Box, 6" × 6" × 6".
- LE Box Lane Extension Cable Outlet Box.
- Normally Open Contact.
- Normally Closed Contact.
- Telephone and Intercom Outlet.
- [I] Junction Box (Roman numeral denotes type).
- Circuit Breaker, single pole.
- Circuit Breaker, double pole.
- Circuit Breaker, three pole.
- Electrically Connected.
- (S)H Halon Abort Switch.
- Pushbutton Switch, Momentary Contact.
- Pushbutton Switch, Momentary Open.
- Pushbutton Switch, Alternate Contact.
- (S3) [S3] Light switch, 20A, 120V., 3 way switch.
- (S)T Temperature alarm switch, single pole 15A .
- Homerun, 2 # 12 unless otherwise indicated.
- Coupling or junction transition point from exposed to concealed installation.
- Conduit riser.
- [TA] Air Conditioner Thermostat.
- (T_1) Traffic Light Control Relay Coil Lane 1.
- (C_2) Carpool Control Relay Coil Lane 2.
- (B_3) Bus Control Relay Coil Lane 3.
- (M_2) Automatic Toll Collection Machine Unit Coil Lane 2.
- (ER) Emergency relay coil.
- (C) Contactor coil.
- Bus
- [GB] Ground bus
- [SN] Solid Neutral
- (SD) Smoke detector
- (n_A) (n_B) Canopy Lights. "n" denotes lane number
- (R) Red Traffic Signal Light.
- (G) Green Traffic Signal Light.
- S_W Single - pole, Single - throw Switch.
- CKT BKR Circuit breaker.
- N Neutral Terminal or Conductor.
- ATCM Automatic Toll Collecting Machine.
- ATS Automatic Transfer Switch.
- BL Booth Lights and receptacle.
- CMS Changeable Message Sign
- CO Carbon Monoxide.
- EMS Extinguishable Message Sign
- [G] Mercury Switch at barrier gate.
- GEN Generator
- IG Isolated ground.
- GFI Ground Fault Circuit Interrupter Receptacle, mounted in weatherproof box and cover.
- CPU Central processing unit.
- UPS Uninterruptible Power Supply.
- JB Junction Box, size as noted.
- JBH 6" × 6" × 4", 14 Gauge Steel Box containing Hg Plunger Type Relay. 25 Amp., 2 pole, normally open, 208 volt coil and with outlet mounted in cover.
- LVCC Low Voltage Control Center.
- MT Empty Conduit with pull wire or rope only.
- NIC Not in Contract. (Part of Contract No. 04-036804)
- NTS Not to scale.
- MPE Main Emergency power panel.
- PE Emergency power panel in toll booth.
- MPR Main Regular power panel.
- PR Regular power panel in toll booth.
- SV Voltage relay.
- TDPU Time delay on pick up relay.
- TL Overhead traffic lights.
- TMS Traffic Management System.
- TRAC Toll Registration , Audit and Collection Systems.
- V Voltage
- WP Weather - proof.
- EDP Emergency disconnect panel.
- 70A/3P 70 amps, 3 pole.
- Rm. Room

PROJECT NOTES

1. Install 1/2" C, 1 terminal extension cable.
2. Install 1 terminal extension and one 19pr.#22 conductor cable for surveillance intercom in existing 3" C.
3. Install 1" C, 1 terminal extension cable.
4. Install 1 1/2" C, 2 terminal extension cables.
5. Install 2" C, 2 terminal extension cables. 20 lane cables.
6. Install 2 " C, 1 terminal extension cable and 20 lane cables.
7. Install 2 " C, 20 lane cables.
8. Install 1" C, 6 # 12, 2 # 12 (insulated green ground).
9. Remove all 19/C. cables from existing 3" C, install 2 # 12, 1 # 12 (insulated green ground) for power.
10. Remove all 19/C. cables from existing 3" C., install 4 # 12, 1 # 12 (insulated green ground) for power.
11. Install 1" C, 4 # 12, 1 # 12 (insulated green ground).
12. Install 1" C, 2 # 12, 1 # 12 (insulated green ground).
13. Install 1/2" C, 2 # 12 Booth Light and receptacle.
14. Install 2" C, 4 # 1/0, 1 # 4 (insulated green ground) to new panel LC in tunnel.
15. Install 1 1/4" C, 5 # 4.
16. Install 5 # 4 in existing 3" C.
17. Install 1 1/4" C, 5 # 4.
18. Install 1" C, 3 # 4.
19. Install 2" C, 4 # 2/0, 1 # 4.
20. Install 2" C, 4 # 2/0.
21. Install 3" C, 2 - 500-MCM.
22. Install 3/4" C, 6 # 12.
23. Install 1/2" C, 4 # 12.
24. Install 1" C, 20 # 18 Type THHN for burglar alarm.
25. Install 2" C, 5-19/C # 18 Cable-EMS and Barrier Gate Indications.
26. Install 1 1/4" C, 24 Pairs # 22-Intercom, surveillance intercom, and Telephone Booths 1-8.
27. Install 1 1/2" C, 27 Pairs # 22-Intercom, surveillance intercom, and Telephone , Booths 9-17, and 3 Pairs # 18 , temporary toll booths.
28. Install 1 3/4" C, 2-19 Pairs # 22-Intercom and Telephone and 3 pairs #18, temporary toll booths.
29. Install 1" C, 2-19/C, # 18, 2 # 12-EMS and Barrier Gate Indications.
30. Install 1" C, 2-19/C # 18, EMS and Barrier Gate Indications.
31. Install 1" C, 19/C # 18, 2 # 12 Alarm System.
32. Install 1" C, 2 # 12 Alarm System Power.
33. Install 1" C, 3 # 8 Toll Booth Regular Power.
34. Install 1" C, 2 # 10 Toll Booth Emergency Power.
35. Install 1/2" C, 3-PR # 22 (Telephone, surveillance intercom. and intercom) 2#18 (alarm annunciation).
36. Install 1/2" C, 3 # 12 Booth Clock.
37. Install 1/2" C, 2 # 12 Outside Receptacle.
38. Install 3/4" C, 3 # 10 Barrier Gate mercury switch.
39. Install 3/4" C, 2#12 Automatic Toll Collection Machine Booth 1 to 10. See Note 7 on E-28.
40. Install 1 1/2" C, Two 4/C #16 RIRC Treadle Cable.
41. Install 1"C, 3 # 8 canopy lights.
42. Install 3/4" C, Trac System Lane Cable.
43. Install 1" C, 4 # 10 Vacuum Cleaner Power.
44. 1" C, 25/C # 18 Changeable Message Sign Control. (CMSC)
45. Install 1/2"C, 2 # 10 Extinguishable Message Sign Flasher Booths 2 to 10. See Note 7 on E-28.
46. Install 1" C, 2 # 12 booth lights and receptacle, 2 # 10 traffic light and EMS Power.
47. Install 1 1/2" C, 4 # 8 Emergency Power Main Feeder.
48. Install 3/4" C, 4 # 10 To Overhead Traffic Light and EMS.
49. Install 3/4" C, 3 # 10 To Overhead Traffic Light 3-way Switch.
50. Install 1/2" C, 3 # 18 Vacuum Cleaner Outlet.
51. Install 1" C, 4 # 10 EMS Dimmer Relay Power.
52. Install 3/4" C, 2 # 10 Traffic light and EMS Power (lanes 16 and 17).
53. Install 3/4" C, 4 # 10 Traffic light and EMS control.
54. Install 1/2" C, 2 # 12 Flashing Beacon Light Power.
55. 1" C, 3 # 8 Changeable Message Sign Power. (CMSP)
56. Install 1/2" C, 2 # 12 Drinking Fountain Receptacle. Lanes 4, 7, 10, 13 & 16.
57. Install 1/2" C, 2 # 12 Flashing Beacon Light.
58. Install 1" C, 3 # 8 Canopy Light.
59. Install 3/4"C, 4#12 canopy light.
60. See note on E-1R1.
61. All existing conduits and conductors coming up the bent columns from tunnel were terminated in 24"x 24"x 10" junction boxes at the top of columns as shown on the plans. Identify each existing circuit and complete new canopy electrical circuits connections . Install all electrical devices including conduits and conductors on the canopy as shown on plans . Remove weather - proof covering for 24"x 24" x 10" junction boxes as required. All plans noted with "NIC" are existing and for reference only.

* NIC

PROJECT NOTES,
LEGEND AND SYMBOLS

E-2

DATE	REVISED BY	DATE REVISED

CALCULATED DESIGNED BY: RC
CHECKED BY: LB

PROJECT ENGINEER: M. CHO

STATE OF CALIFORNIA - DEPARTMENT OF TRANSPORTATION
Caltrans

FORM DC-OE-SPECIAL (10/86)

FOR REDUCED PLANS ORIGINAL SCALE IS IN INCHES 0 1 2 3

CU 04334 EA 003181

DIST.	COUNTY	ROUTE	POST MILES TOTAL PROJECT	SHEET NO.	TOTAL SHEETS
04	Ala	80	2.0	48	68

Luis Batiga
ENGINEER NO.

1-25-88
PLANS APPROVAL DATE

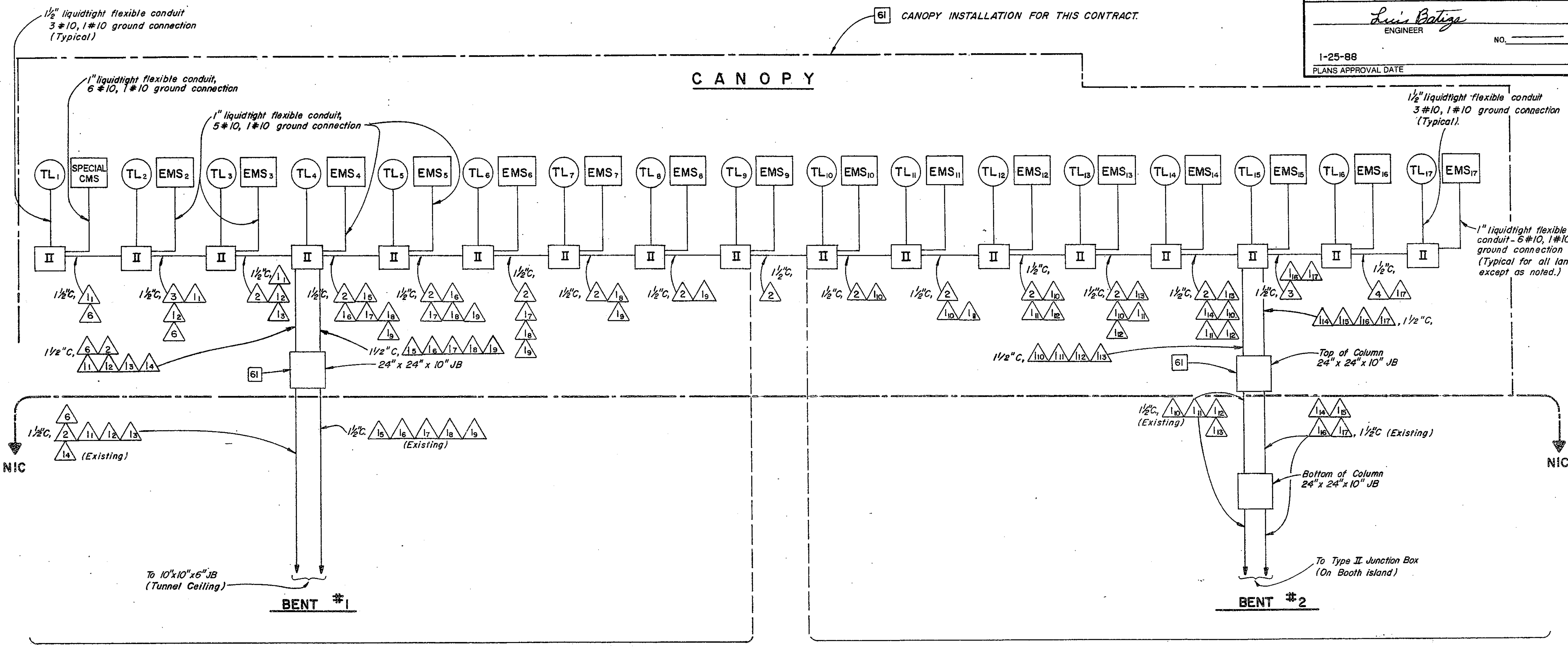

SECTION I - OVERHEAD TRAFFIC LIGHT

SECTION II - OVERHEAD TRAFFIC LIGHT

SYMBOLS

- (1N) 5#10 to Traffic Lights and EMS (LANES 2 to 5). 6#10 to Traffic Lights and EMS (LANES 6 to 17). "N" denotes corresponding lane number. 6#10 to Traffic Lights and CMS (LANE 1).
- (2) 4#10 dimmer relay power (from panel D).
- (3) 3#10 dimmer relay power.
- (4) 2#10 dimmer relay power.
- (5) 2#10 Overhead Traffic Lights status; 2#10 EMS Control Switch } To relay control cabinet.
- (6) Add 2#10, power for Special CMS, Lane 1 only.
- (7) 5#10, Overhead Traffic Light status and Special CMS Control Switch (To relay control cabinet), Lane 1 only.
- (8) Install 1/2"C, 2#10, Special CMS Control, Lane 1 only.

NOTES

1. For project notes and symbols, see E-2.
2. For conduit routing on the canopy, see E-4 and E-10.

REDUCED PLAN
USE SCALE BELOW
0 1 2 3
3 INCHES ON ORIGINAL PLAN

APPROVED FIRE AND PANIC ONLY
JUL 3 1 1987
STATE FIRE MARSHAL

OVERHEAD TRAFFIC LIGHTS AND EXTINGUISHABLE MESSAGE SIGN (EMS) CONDUIT AND CONDUCTOR BLOCK DIAGRAM

NO SCALE

E-3

DATE REVISED
CHECKED BY LB
M. CHO
Caltrans

DIST.	COUNTY	ROUTE	POST MILES TOTAL PROJECT	SHEET NO.	TOTAL SHEETS
04	Ala	80	2.0	49	68

ENGINEER

NO.

1-25-88
PLANS APPROVAL DATE

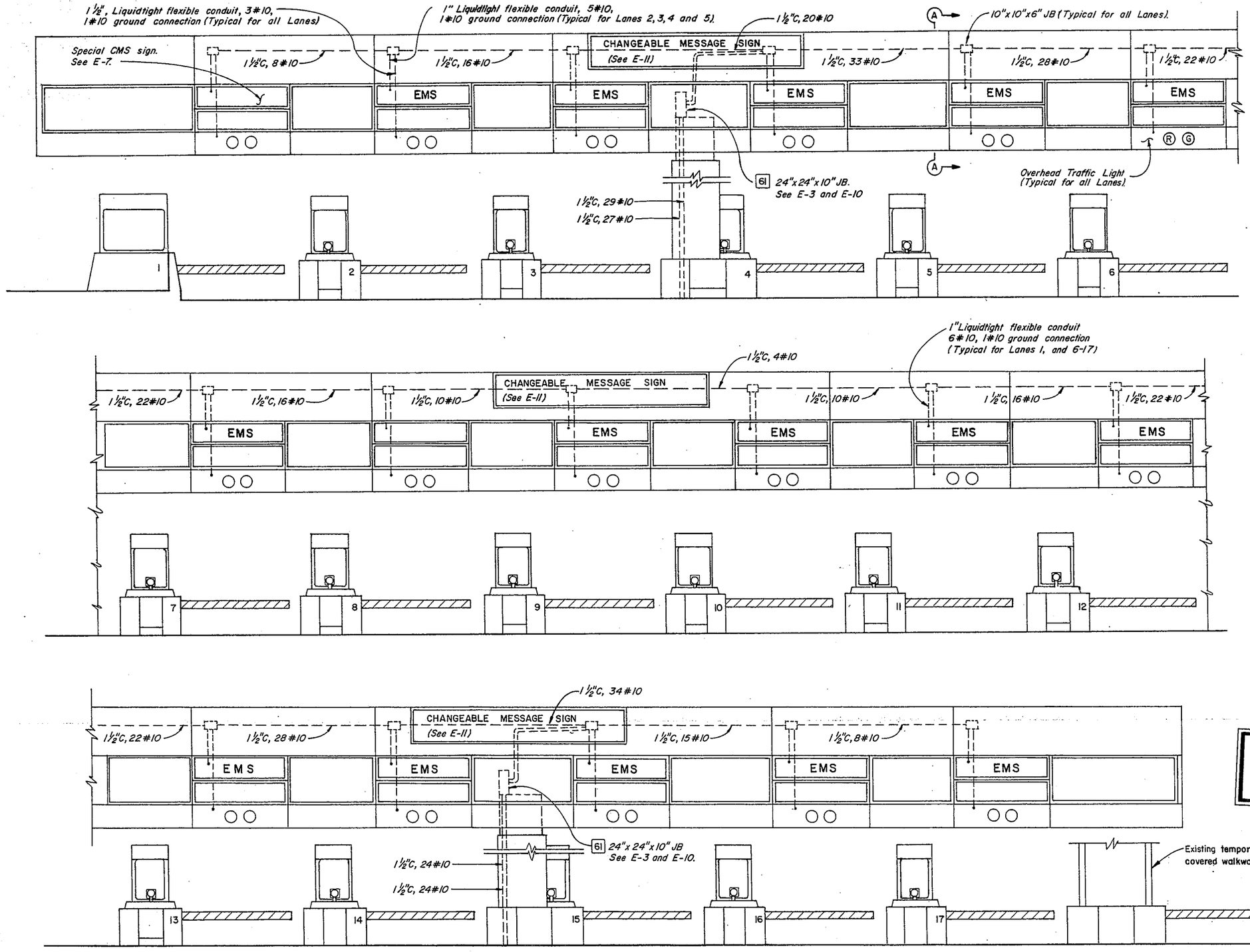

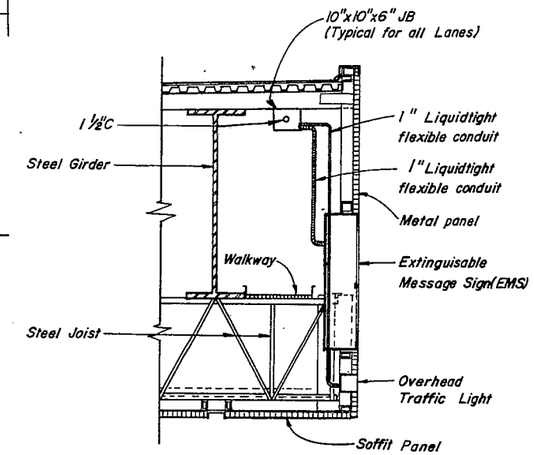

SECTION A-A
SCALE: 1/2" = 1'-0"

NOTES

1. Install electrical devices including conduits and conductors on canopy only, see 61.
2. For overhead Traffic Lights and Extinguisable Sign (EMS) Schematic Diagram, see E-6.
3. EMS on Lane 11 and 12 shall be installed but unplugged.
4. Install special CMS on Lane 1.
5. For Project Notes, see E-2.
6. See Arch. Dwgs. for EMS sign and overhead traffic light mounting details.

REDUCED PLAN
USE SCALE BELOW
0 1 2 3
3 INCHES ON ORIGINAL PLAN

OVERHEAD TRAFFIC LIGHTS AND EXTINGUISHABLE MESSAGE SIGN CONDUIT LAYOUT IN CANOPY - EAST ELEVATION

SCALE: 1/4" = 1'-0"

E-4

REVISED BY	DATE REVISED

DATE	R.C.
	L.B.

CALCULATED/DESIGNED BY
CHECKED BY

PROJECT ENGINEER M. CHO

STATE OF CALIFORNIA · DEPARTMENT OF TRANSPORTATION
Caltrans

19

FORM DC-OE-SPECIAL (10/86)

FOR REDUCED PLANS ORIGINAL SCALE IS IN INCHES 0 1 2 3

CU 04334 EA 003181

DIST.	COUNTY	ROUTE	POST MILES TOTAL PROJECT	SHEET NO	TOTAL SHEETS
04	Ala	80	2.0	50	68

Luis Portiga
ENGINEER

NO.

1-25-88
PLANS APPROVAL DATE

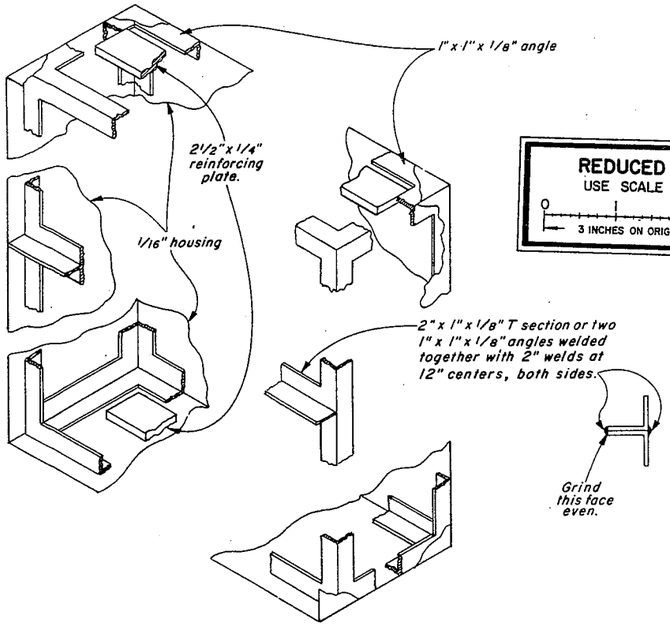

FRAMING DETAILS
NO SCALE

REDUCED PLAN
USE SCALE BELOW
0 1 2 3
3 INCHES ON ORIGINAL PLAN

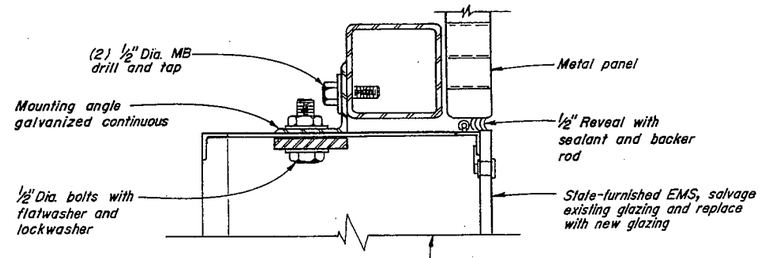

DETAIL 1
NO SCALE

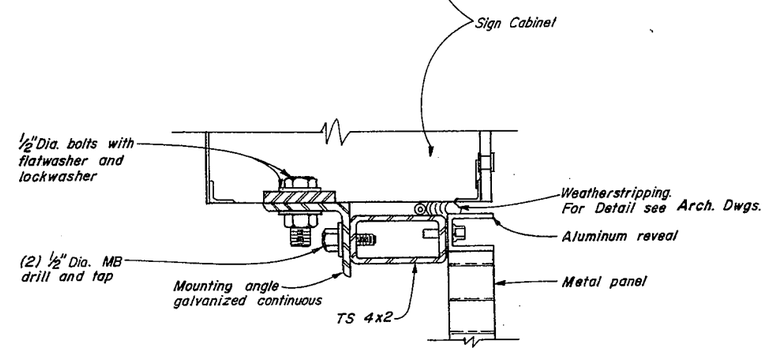

DETAIL 2
NO SCALE

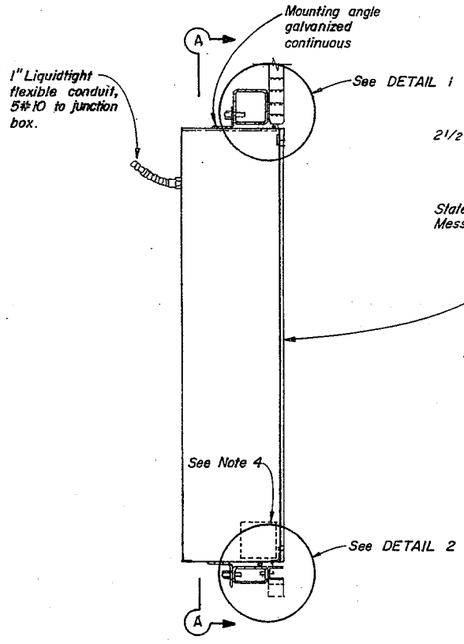

MOUNTING DETAIL
NO SCALE

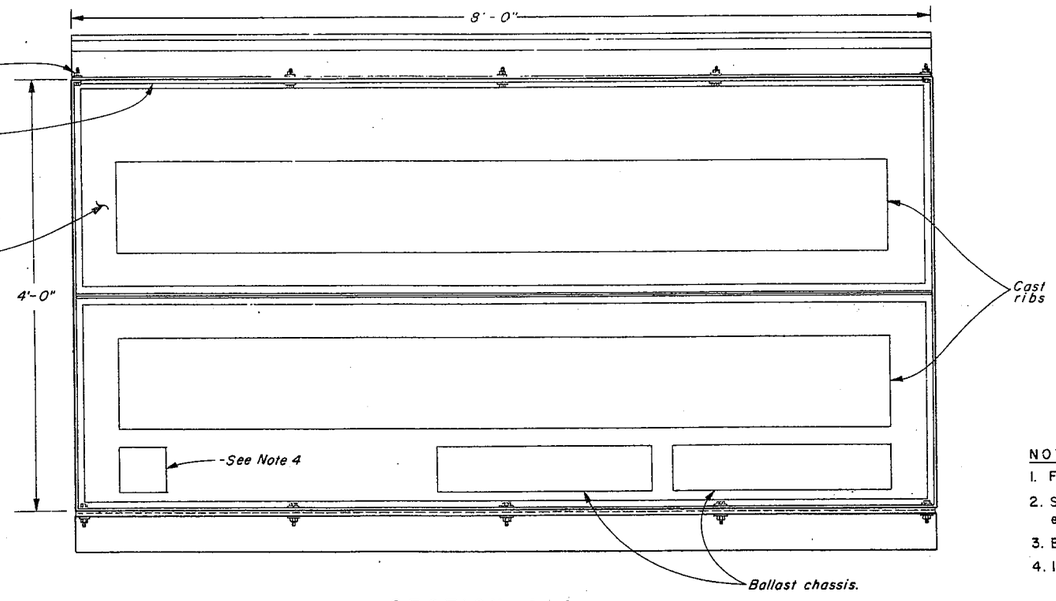

SECTION A-A
SCALE: 1 1/2" = 1'-0"

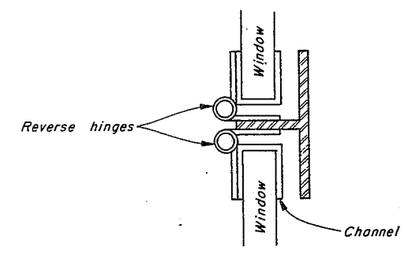

HINGE DETAIL
NO SCALE

NOTES:

1. For canopy details, see Arch. Dwgs.
2. See ES-27A of the standard plans, for other applicable details, exceptions are shown on this sheet.
3. EMS letters shall be 8" or 10". For messages and locations, see sheet E-11.
4. Install Flasher unit and Radio interference suppressor where required, see sheet E-6.

SPECIAL CMS AND EMS MOUNTING DETAILS

SCALE: AS SHOWN

E-5

STATE OF CALIFORNIA - DEPARTMENT OF TRANSPORTATION
Caltrans
PROJECT ENGINEER M. CHO
CALCULATED DESIGNED BY R.C. DATE REVISED
CHECKED BY L.B. DATE REVISED

DIST	COUNTY	ROUTE	POST MILES TOTAL PROJECT	SHEET NO.	TOTAL SHEETS
04	Ala	80	2.0	51	68

Luis Batiza
ENGINEER

NO.

1-25-88
PLANS APPROVAL DATE

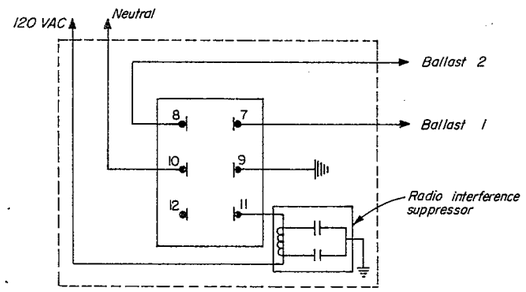

SOLID STATE FLASHER DETAIL
(See ES-4C of the standard plans)

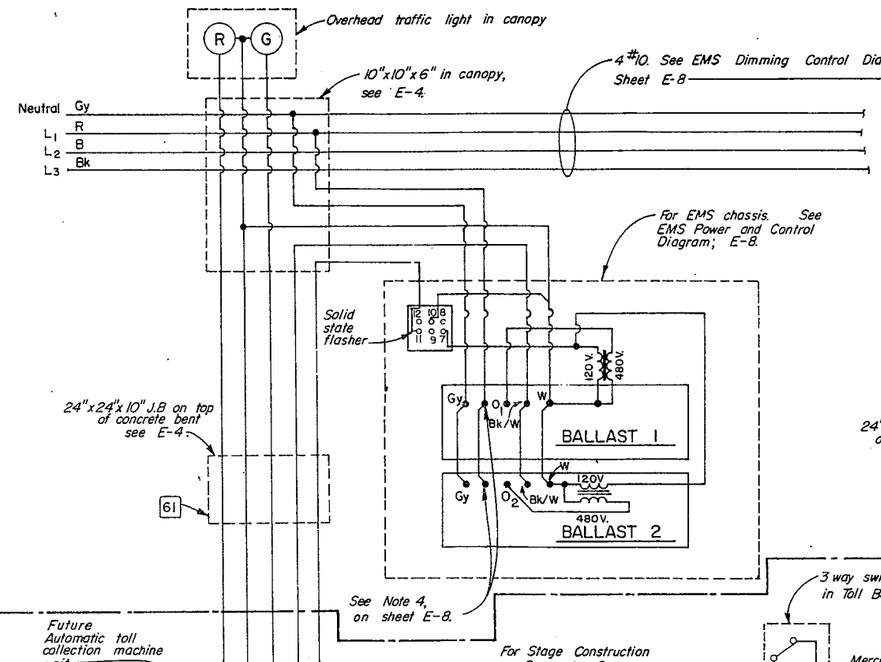

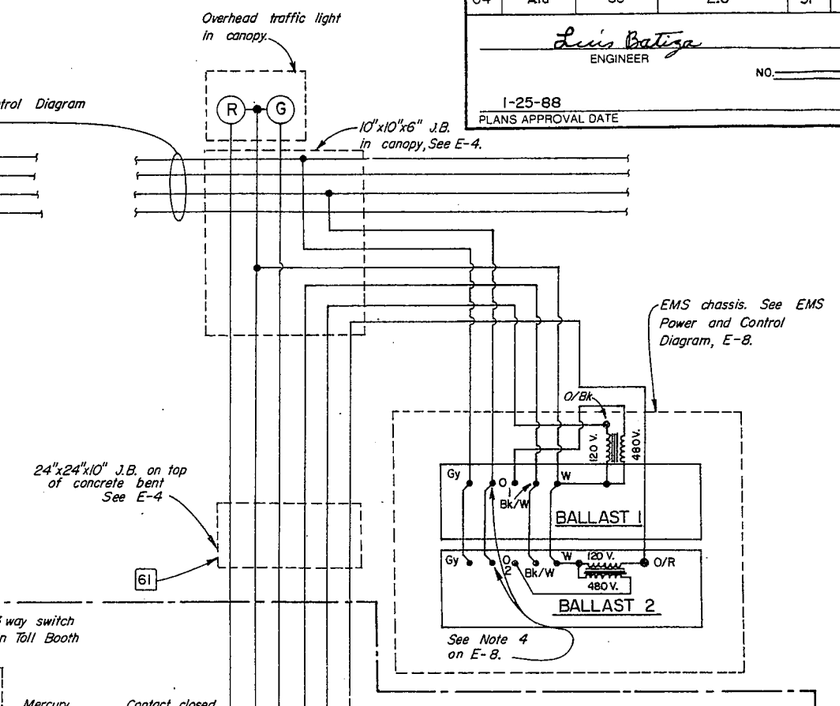

TYPICAL SCHEMATIC DIAGRAM – EMS FOR LANES 6 TO 17
(LANE 6 SHOWN)

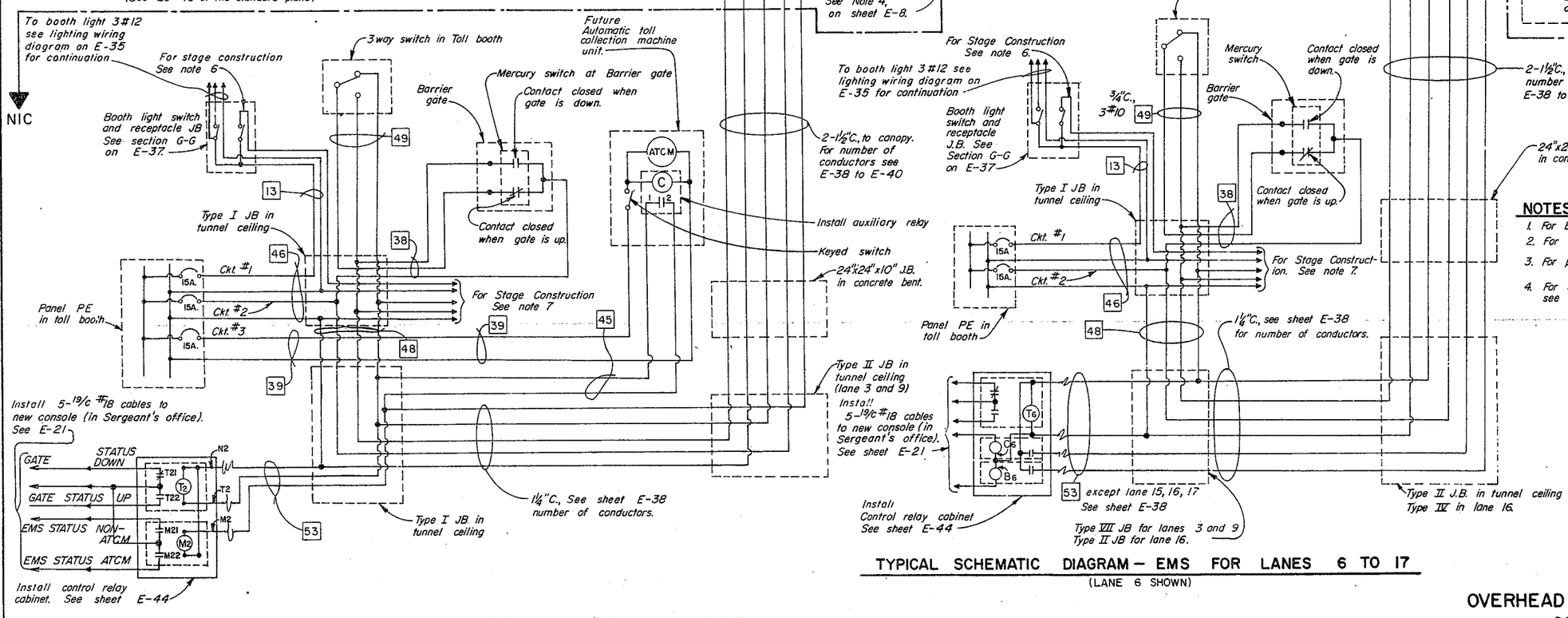

TYPICAL SCHEMATIC DIAGRAM – FLASHING EMS FOR LANES 2, 3, 4, AND 5
(LANE 2 SHOWN)

NOTES

1. For EMS locations, see sheet E-4.
2. For actual conduit and conductor installation, see E-4.
3. For project notes, see E-2.
4. For overhead traffic lights and EMS block diagram, see E-3.

REDUCED PLAN
USE SCALE BELOW
0 1 2 3
3 INCHES ON ORIGINAL PLAN

OVERHEAD TRAFFIC LIGHT AND EMS SCHEMATIC DIAGRAMS

NO SCALE

E-6

REVISED BY	DATE	
DATE REVISED	R. CHIU	7-8
CALCULATED DESIGNED BY	CHECKED BY	
PROJECT ENGINEER	M. CHO	

STATE OF CALIFORNIA - DEPARTMENT OF TRANSPORTATION
Caltrans

FORM DC-OE-SPECIAL (10/86)

FOR REDUCED PLANS ORIGINAL SCALE IS IN INCHES 0 1 2 3

CU 04 334

EA 003181

DIST.	COUNTY	ROUTE	POST MILES TOTAL PROJECT	SHEET NO	TOTAL SHEETS
04	Ala	80	2.0	52	68

ENGINEER

NO.

1-25-88
PLANS APPROVAL DATE

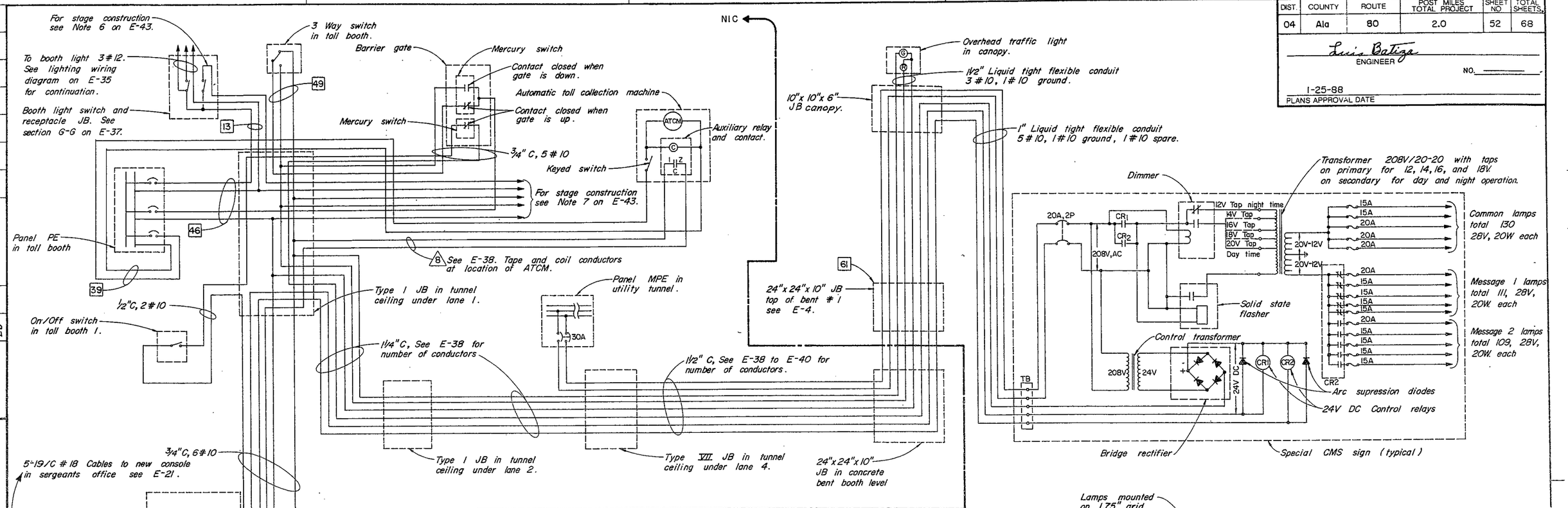

TYPICAL SCHEMATIC DIAGRAM - SPECIAL CMS AND TRAFFIC CONTROL

FRONT ELEVATION SPECIAL CMS

SECTION A-A

LAMP HOUSING DETAIL (TYPICAL)

OVERHEAD TRAFFIC LIGHT AND SPECIAL CMS FOR LANE 1

NO SCALE

E-7

FOR REDUCED PLANS ORIGINAL SCALE IS IN INCHES 0 1 2 3		CU 04334	EA 003181

STATE OF CALIFORNIA - DEPARTMENT OF TRANSPORTATION
Caltrans
PROJECT ENGINEER M. CHO
CALCULATED DESIGNED BY PP
CHECKED BY L.B.
DATE REVISED
REVISED BY

FORM DC-OE-SPECIAL (10/86)

DIST.	COUNTY	ROUTE	POST MILES TOTAL PROJECT	SHEET NO	TOTAL SHEETS
04	Ala	80	2.0	53	68

Luis Batiga
ENGINEER

NO.

1-25-88
PLANS APPROVAL DATE

REDUCED PLAN
USE SCALE BELOW
0 1 2 3
3 INCHES ON ORIGINAL PLAN

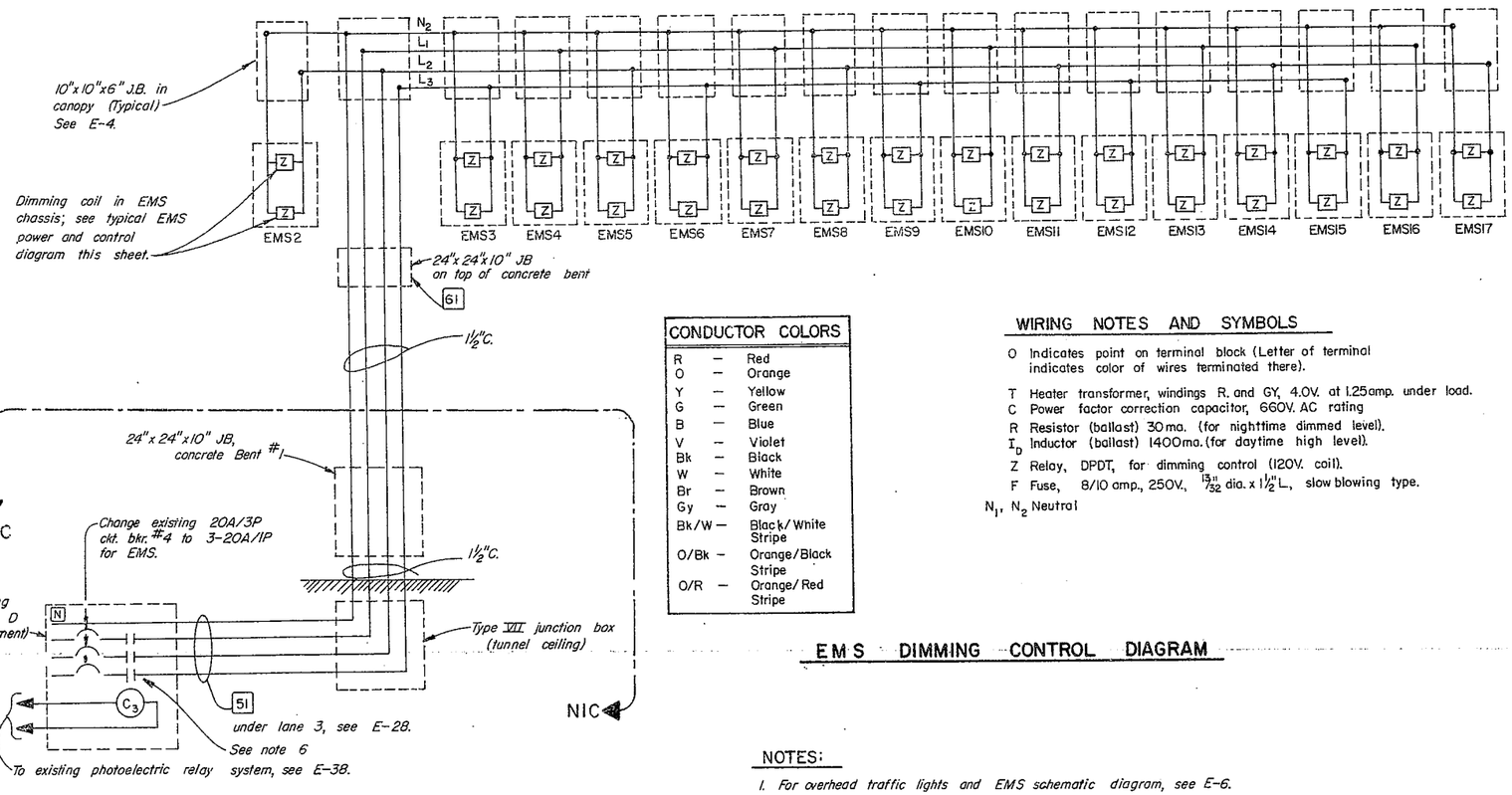

CONDUCTOR COLORS		
R	—	Red
O	—	Orange
Y	—	Yellow
G	—	Green
B	—	Blue
V	—	Violet
Bk	—	Black
W	—	White
Br	—	Brown
Gy	—	Gray
Bk/W	—	Black/White Stripe
O/Bk	—	Orange/Black Stripe
O/R	—	Orange/Red Stripe

WIRING NOTES AND SYMBOLS

O Indicates point on terminal block (Letter of terminal indicates color of wires terminated there).

T Heater transformer, windings R. and GY, 4.0V. at 1.25amp. under load.
C Power factor correction capacitor, 660V. AC rating
R Resistor (ballast) 30ma. (for nighttime dimmed level).
I_D Inductor (ballast) 1400ma. (for daytime high level).
Z Relay, DPDT, for dimming control (120V. coil).
F Fuse, 8/10 amp., 250V., 15/32" dia. x 1½" L., slow blowing type.
N_1, N_2 Neutral

EMS DIMMING CONTROL DIAGRAM

NOTES:

1. For overhead traffic lights and EMS schematic diagram, see E-6.
2. For canopy light fixture location, see E-10.
3. EMS. 11 and 12 shall be installed and completely wired, but unplugged.
4. L_1, L_2, or L_3 where applicable.
5. Photoelectric unit shall have a "turn-on" level of 50 footcandles or lower measured in the horizontal plane and the "turn off" level shall not exceed 3 times "turn on" level.

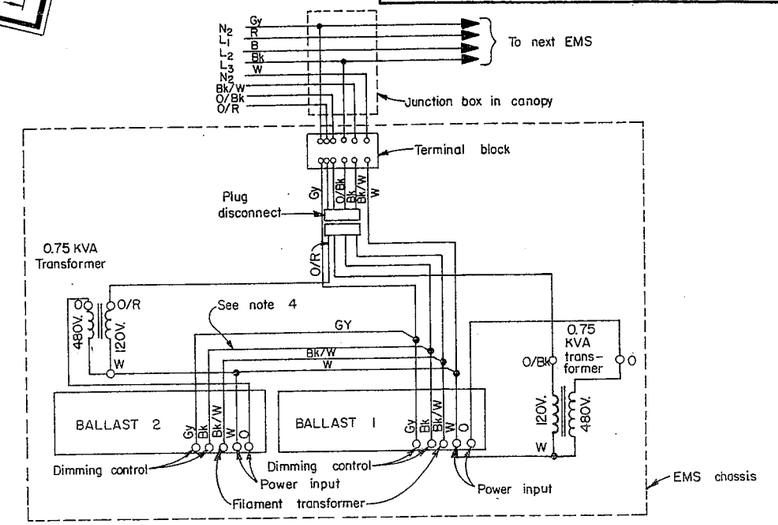

POWER AND CONTROL DIAGRAM

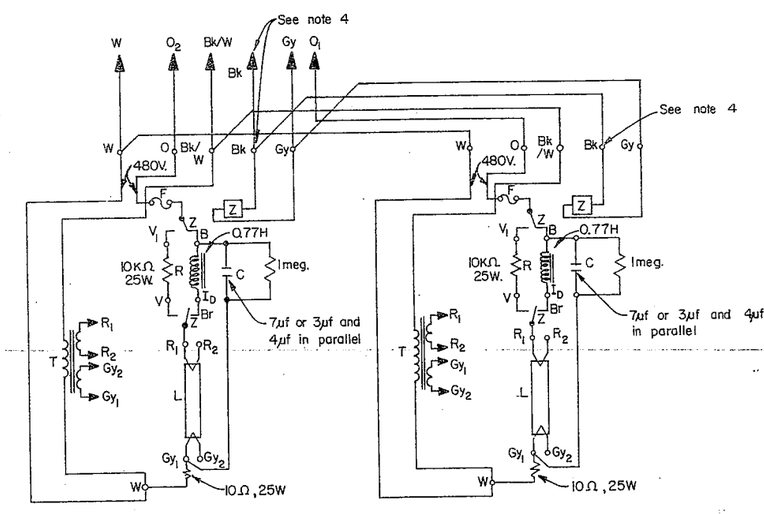

BALLAST WIRING DIAGRAM

TYPICAL EMS POWER AND CONTROL DIAGRAM

(Similar to ES-27A except for the modifications as shown)

EXTINGUISHABLE MESSAGE SIGNS SCHEMATIC DIAGRAM

NO SCALE

E-

STATE OF CALIFORNIA - DEPARTMENT OF TRANSPORTATION

PROJECT ENGINEER M. CHO

CALCULATED DESIGNED BY	R.C.	DATE	REVISED BY
CHECKED BY	L.B.		DATE REVISED

FORM DC-C-C-SPECIAL (10/88)

FOR REDUCED PLANS ORIGINAL SCALE IS IN INCHES 0 1 2 3

CU 04334

EA 003181

DIST.	COUNTY	ROUTE	POST MILES TOTAL PROJECT	SHEET NO	TOTAL SHEETS
04	Ala	80	2.0	54	68

Luis Batiza
ENGINEER

NO.

1-25-88
PLANS APPROVAL DATE

REDUCED PLAN
USE SCALE BELOW
0 1 2 3
3 INCHES ON original PLAN

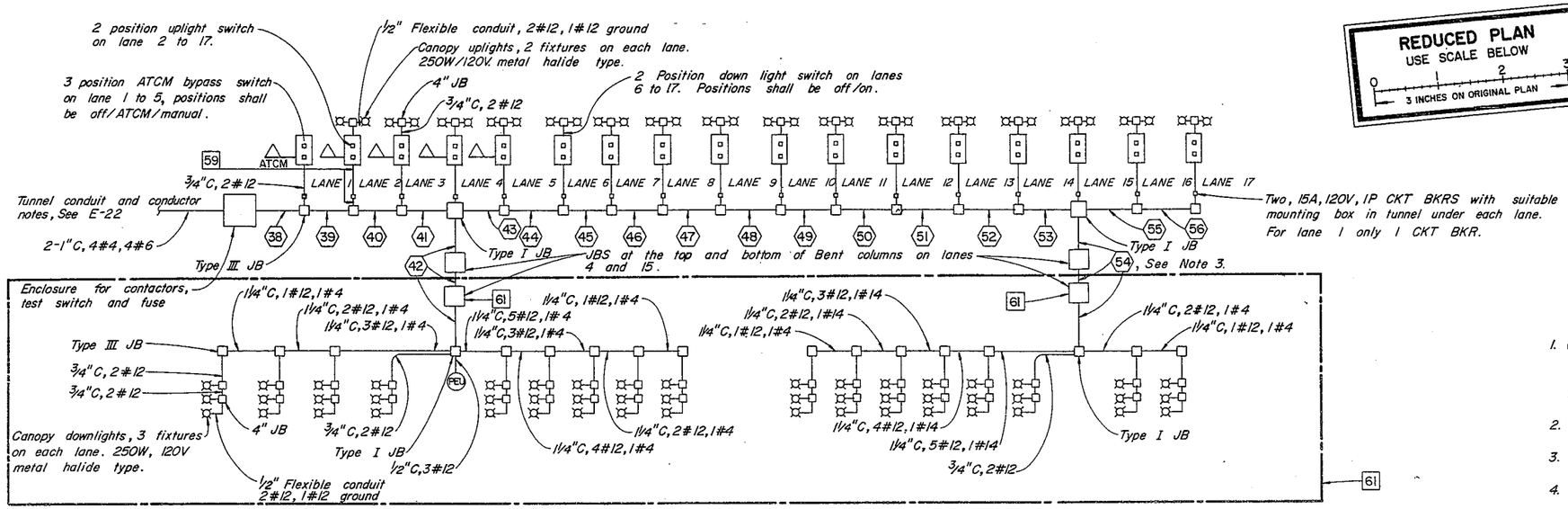

CONDUIT LAYOUT - UPLIGHTS AND DOWNLIGHTS CIRCUITS

NOTES & SYMBOLS

1. (a) The logic contact closes when -
   Lane is open and ATCM machine is on (ATCM mode), and lane console is off.
   Lane is open and ATCM machine is off (manual mode), and lane console is on.
   (b) The logic contact opens when the lane is closed (ATCM and lane console are off).
2. No uplights on lane 1.
3. Conduit and conductor notes in ⬡ blocks see this sheet.
4. Successive lane fixtures (uplights and downlights) shall be connected to alternate phase. Uplights not part of this contract.
5. This plan shows existing schematic and conduit layout, except canopy lighting installation as noted by 61.

42 — 2"C, 1#4, 12#12, See 61.

54 — 2"C, 1#4, 8#12, See 61.

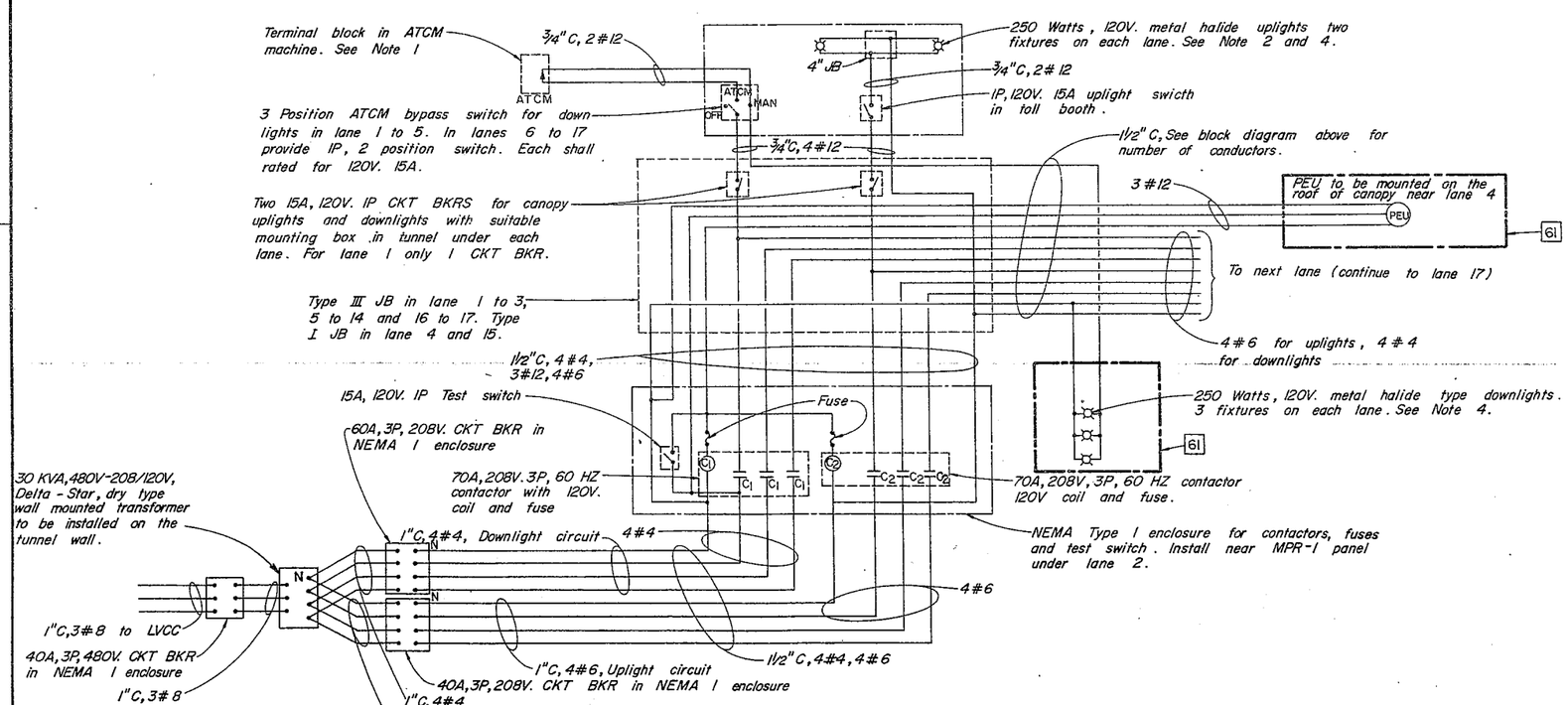

CANOPY UPLIGHTS AND DOWNLIGHTS - SCHEMATIC DIAGRAM (TYPICAL)

SEE NOTE 2

STATE OF CALIFORNIA
COUNTY OF

CANOPY LIGHTING

INDIVIDUAL LANE UPLIGHTS AND DOWNLIGHTS CONTROL
SCHEMATIC AND CONDUIT LAYOUT

NO SCALE

E-9

STATE OF CALIFORNIA - DEPARTMENT OF TRANSPORTATION
Caltrans
PROJECT ENGINEER M. CHO
CALCULATED / DESIGNED BY
CHECKED BY
P.P. L.B.
DATE REVISED
REVISED BY

STD. PLAN E-SPECIAL (10/88)

FOR REDUCED PLANS ORIGINAL SCALE IS IN INCHES 0 1 2 3

CU 04334

EA 003181

DIST.	COUNTY	ROUTE	POST MILES TOTAL PROJECT	SHEET NO	TOTAL SHEETS
04	Ala	80	2.0	55	58

Luis Batiza
ENGINEER

NO.

1-25-88
PLANS APPROVAL DATE

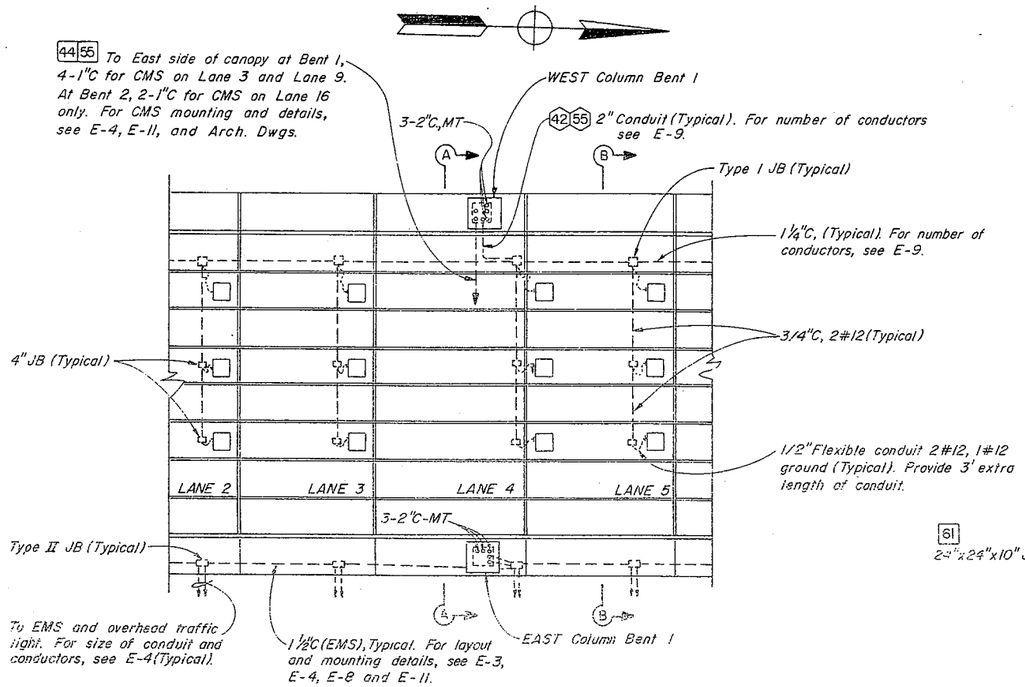

REFLECTED CANOPY SOFFIT LIGHTING PLAN (TYPICAL)

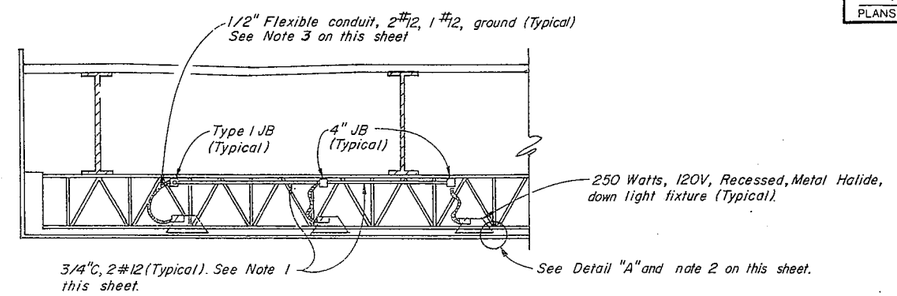

TYPICAL SECTION B-B

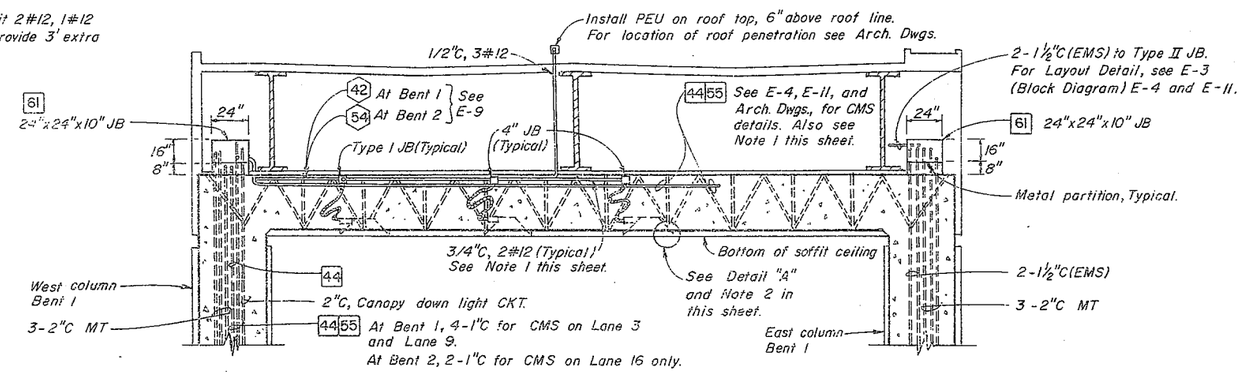

TYPICAL SECTION A-A AT BENTS

REDUCED PLAN
USE SCALE BELOW
0 1 2 3
3 INCHES ON ORIGINAL PLAN

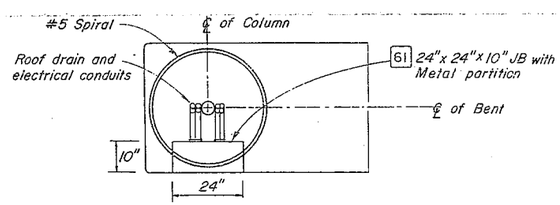

TOP VIEW - WEST COLUMN

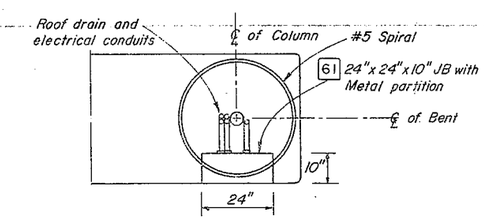

TOP VIEW - EAST COLUMN

NOTE: 1. Install conduits and junction boxes with suitable clamps and mounting bolts on the sides of the joist.

2. For location of Downlight - Fixtures, see Arch. Dwgs.

3. Provide 3' extra lenght of flexible conduit to each fixture for ease of maintenance.

CANOPY DOWN LIGHTING EMS AND CMS DETAILS

NO SCALE

E-10

R.CHU	DATE
CALCULATED BY	
DESIGNED BY	
CHECKED BY	
REVISED BY	
DATE REVISED	

PROJECT ENGINEER M. CHO

STATE OF CALIFORNIA - DEPARTMENT OF TRANSPORTATION

Caltrans

FORM D-OE-SPECIAL (10/86)

FOR REDUCED PLANS ORIGINAL SCALE IS IN INCHES 0 1 2 3

CU 04334 EA 003181

DIST	COUNTY	ROUTE	POST MILES TOTAL PROJECT	SHEET NO	TOTAL SHEETS
04	Ala	80	2.0	56	68

Luis Batiza
ENGINEER

NO.

1-25-88
PLANS APPROVAL DATE

SIGN TYPE	LANE No.		SIGN/LETTER SIZE 12"	12"	10"
SPECIAL CMS	1	LINE 1	◊ CAR POOLS	AUTOS -75 ¢	
		LINE 2	BUSES ONLY	COINS ONLY	
EMS	2 To 10	LINE 1			AUTOS -75¢
		LINE 2			COINS ONLY
EMS	11 and 12	LINE 1			
		LINE 2			
EMS	13 To 17	LINE 1			TRUCKS
		LINE 2			AUTOS O.K.

MESSAGE I MESSAGE II

SPECIAL CMS, EMS MESSAGE TABLE

REDUCED PLAN
USE SCALE BELOW
0 1 2 3
3 INCHES ON ORIGINAL PLAN

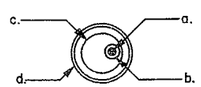

a. 25 conductor, 18 AWG, stranded copper.
b. 0.018" vinyl insulation (300 V.)
c. Binder tape.
d. 0.078" chrome vinyl jacket.

TYPE CMSC
(CHANGEABLE MESSAGE SIGN CONTROL)
COLOR CODE-IPCEA METHOD 1

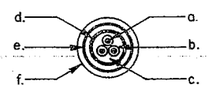

a. Three conductor, 8 AWG, stranded copper.
b. 0.047" rubber insulation (600 V.)
c. Fillers.
d. Binder tape.
e. 0.010" corrugated copper shield.
f. 0.050" polythylene jacket.

TYPE CMSP
(CHANGEABLE MESSAGE SIGN POWER 240V.)
COLOR CODE: 1. Black
2. Red
3. White

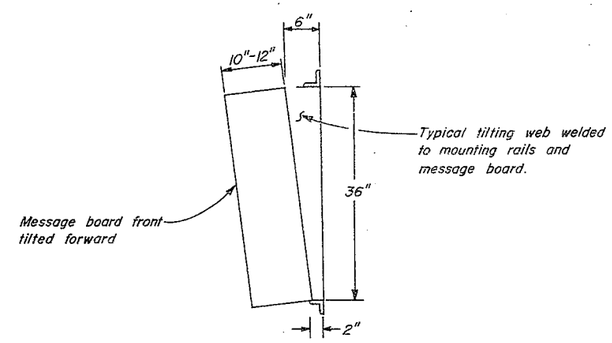

CMS UNIT SIDE VIEW

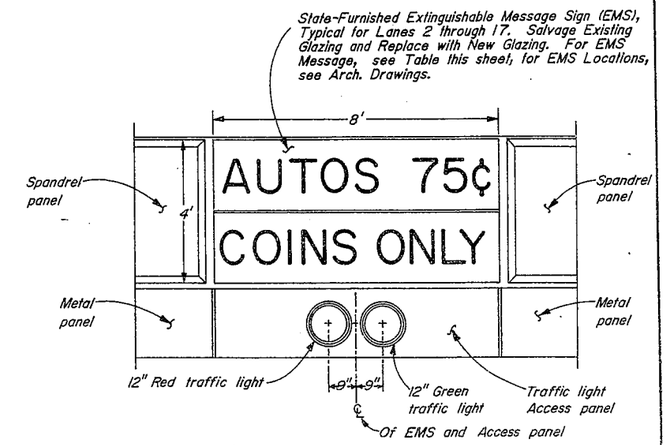

ELEVATION - EXTINGUISHABLE MESSAGE SIGN
NO SCALE

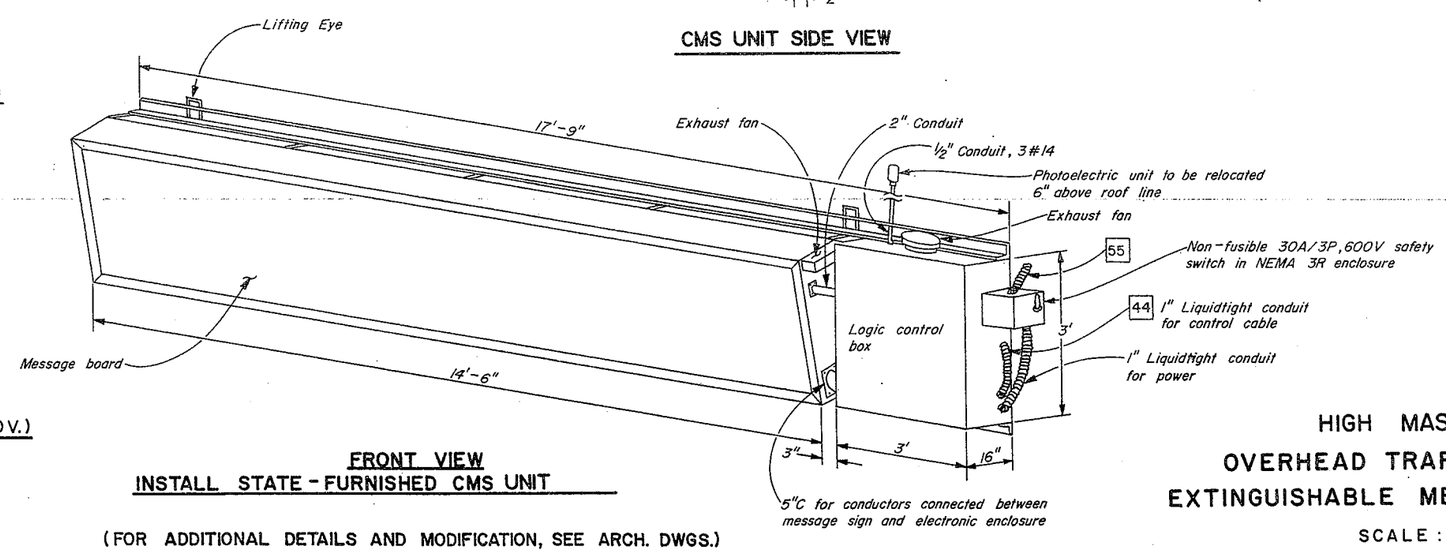

FRONT VIEW
INSTALL STATE-FURNISHED CMS UNIT

(FOR ADDITIONAL DETAILS AND MODIFICATION, SEE ARCH. DWGS.)

APPROVED FOR READ ONLY
JUL 3 1 1987

HIGH MAST LIGHTING, CMS, OVERHEAD TRAFFIC LIGHTS, AND EXTINGUISHABLE MESSAGE SIGN DETAILS

SCALE: AS SHOWN

E-11

STATE OF CALIFORNIA - DEPARTMENT OF TRANSPORTATION
Caltrans

PROJECT ENGINEER M. CHO
DESIGNED BY RC
CHECKED BY LB
REVISED BY
DATE REVISED

FOR REDUCED PLANS ORIGINAL SCALE IS IN INCHES 0 1 2 3

CU04334 EA 003181

DOT DC-OE-SPECIAL (10/86)

Dist.	COUNTY	ROUTE	POST MILES TOTAL PROJECT	SHEET NO.	TOTAL SHEETS
04	Ala	80	2.0	57	68

ENGINEER Luis Batiza

NO.

DATE APPROVED 1-25-88

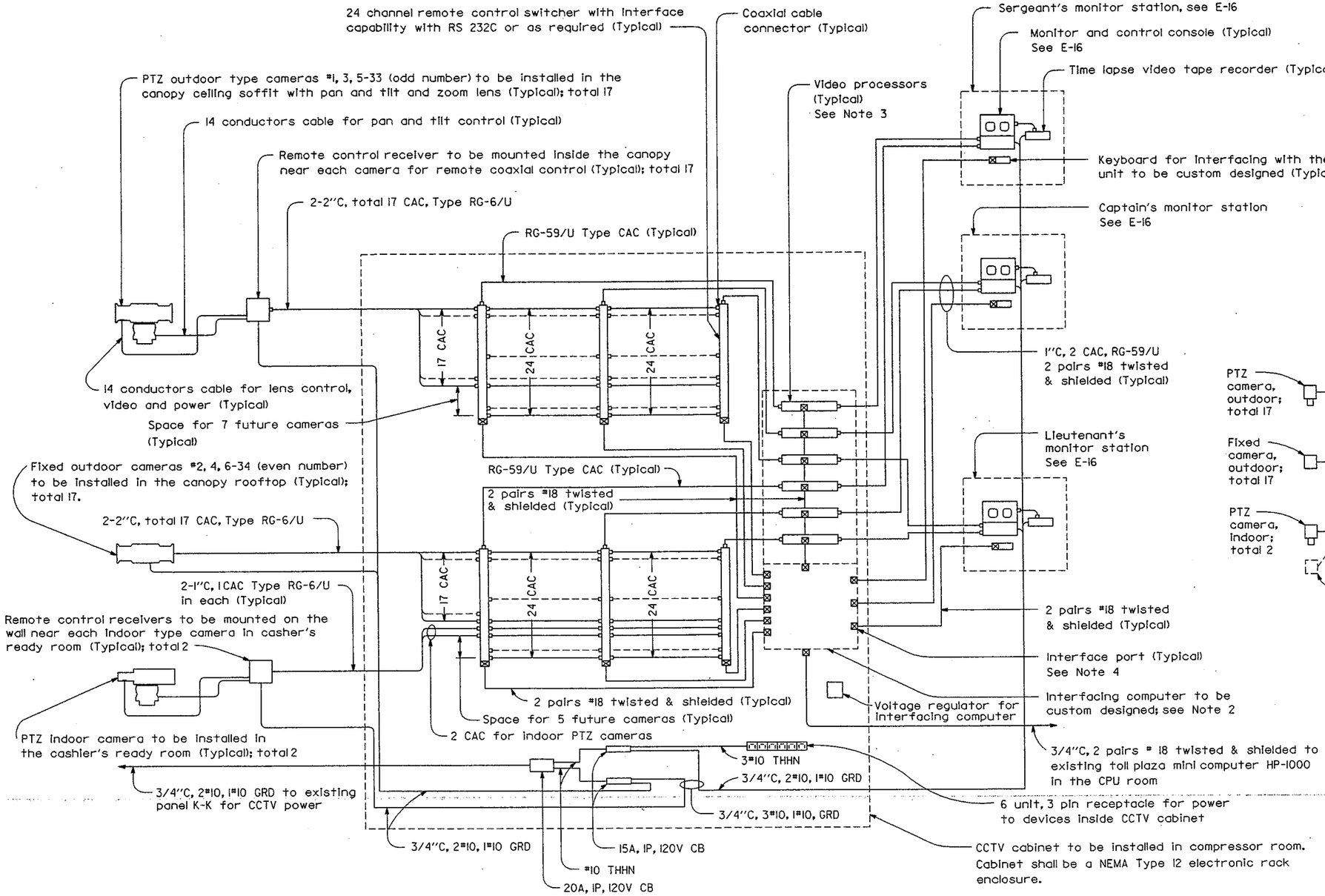

ONE LINE DIAGRAM

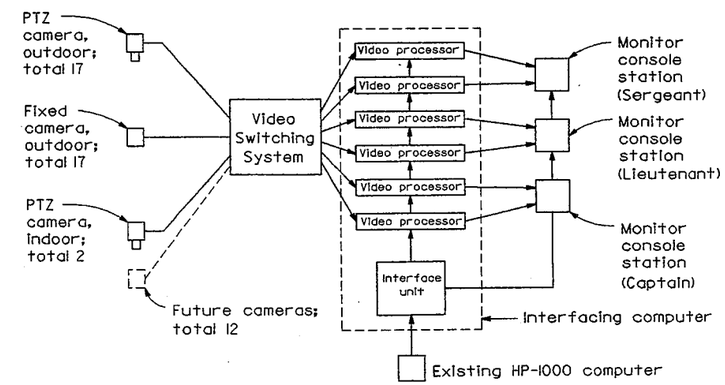

BLOCK DIAGRAM

See Note 1

REDUCED PLAN
USE SCALE BELOW
0 1 2 3
3 INCHES ON ORIGINAL PLAN

Notes:

1. All devices shall be supplied with 120V, AC, 60Hz power
2. Contractor shall design, develop and install the interfacing computer, keyboards, video processors and any other related electronic devices with suitable software programs necessary to meet the functional requirements as described in the special provisions in order to display toll transaction details on the video monitors.
3. Video processors shall be part of the interface unit and shall be designed, developed and installed by the Contractor.
4. The interfacing between the custom designed interface unit, video processors, video switchers, keyboards etc. shall be RS 232C, RS 2485 or RS 422. The Contractor shall select the suitable type of interfacing for specified requirements.
5. The one line diagram does not show the junction boxes, floor boxes and individual conduit terminators. All electrical and electronic devices shown are symbolic only.
6. All devices shown in this sheet are new and shall be installed by the Contractor except as noted.

PROJECT ENGINEER	DATE	DESIGN ENGINEER	DATE	APPROVAL RECOMMENDED BY	DATE
M. CHO		P.P.			

APPROVED FOR CONSTRUCTION 11 3 1988 STATE LINE TO COASTAL

CCTV SYSTEM
ONE LINE AND BLOCK DIAGRAMS

SCALE: NONE

E-12

FOR REDUCED PLANS ORIGINAL SCALE IS IN INCHES 0 1 2 3

CU 04 334

003181

ZFA2:[331,1]400318E12.DGN;1

DIST.	COUNTY	ROUTE	POST MILES TOTAL PROJECT	SHEET NO.	TOTAL SHEETS
04	Ala	80	2.0	58	68

Luis Batiga
ENGINEER

NO.

1-25-88
PLANS APPROVAL DATE

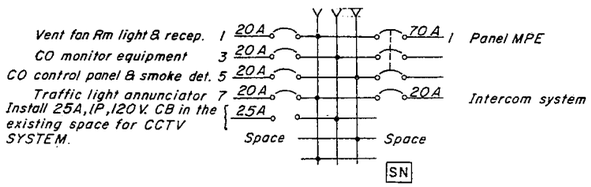

EXISTING PANEL K-K

120/208V. 3Ø 4W

(All devices shown in this diagram are- existing except as noted)

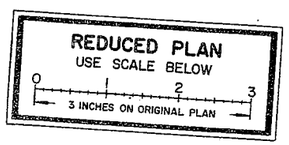

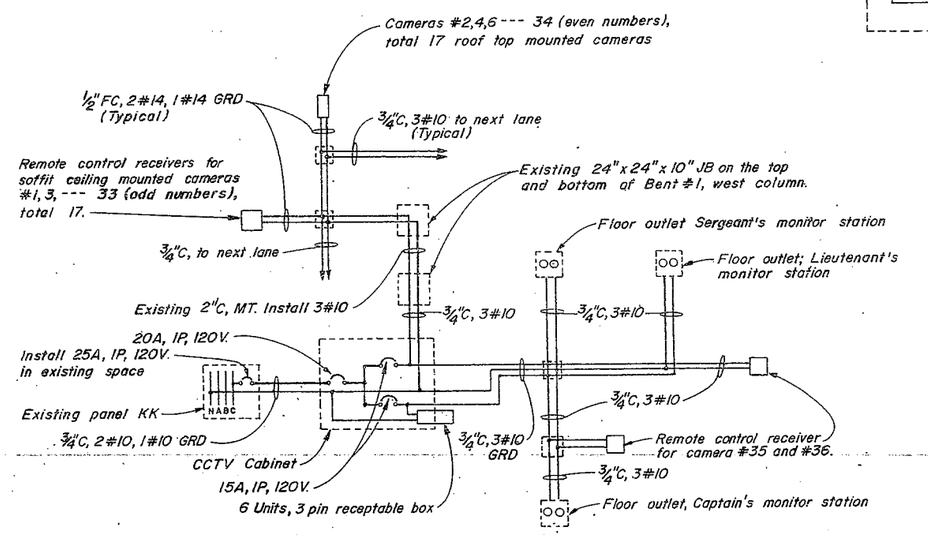

SCHEMATIC DIAGRAM POWER SUPPLY

(All devices shown in this diagram are new unless otherwise noted).

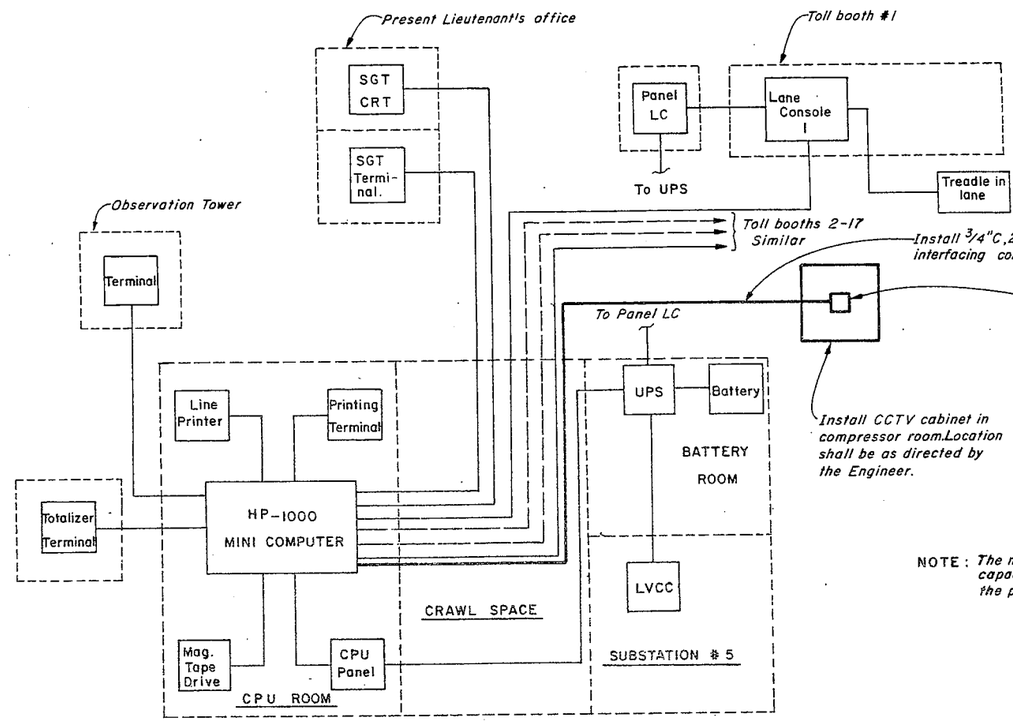

NOTE: The new circuit breakers shall have the same interrupting capacity rating as that of the existing circuit breakers in the power supply system.

EXISTING TOLL REGISTRATION AUDIT AND COLLECTION (TRAC) BLOCK DIAGRAM

(All devices shown in the block diagram are existing except as marked by heavy lines).

CCTV SYSTEM
POWER SUPPLY AND TRAC DETAILS

E-13

DESIGNED BY
CHECKED BY
DATE REVISED
M. CHO

Caltrans

DC-OE-SPECIAL (10/86)

FOR REDUCED PLANS ORIGINAL SCALE IS IN INCHES 0 1 2 3

CU 04334 EA 003181

DIST.	COUNTY	ROUTE	POST MILES TOTAL PROJECT	SHEET NO	TOTAL SHEETS
04	Ala	80	2.0	59	68

Luis Batiza
ENGINEER

NO.

1-25-88
PLANS APPROVAL DATE

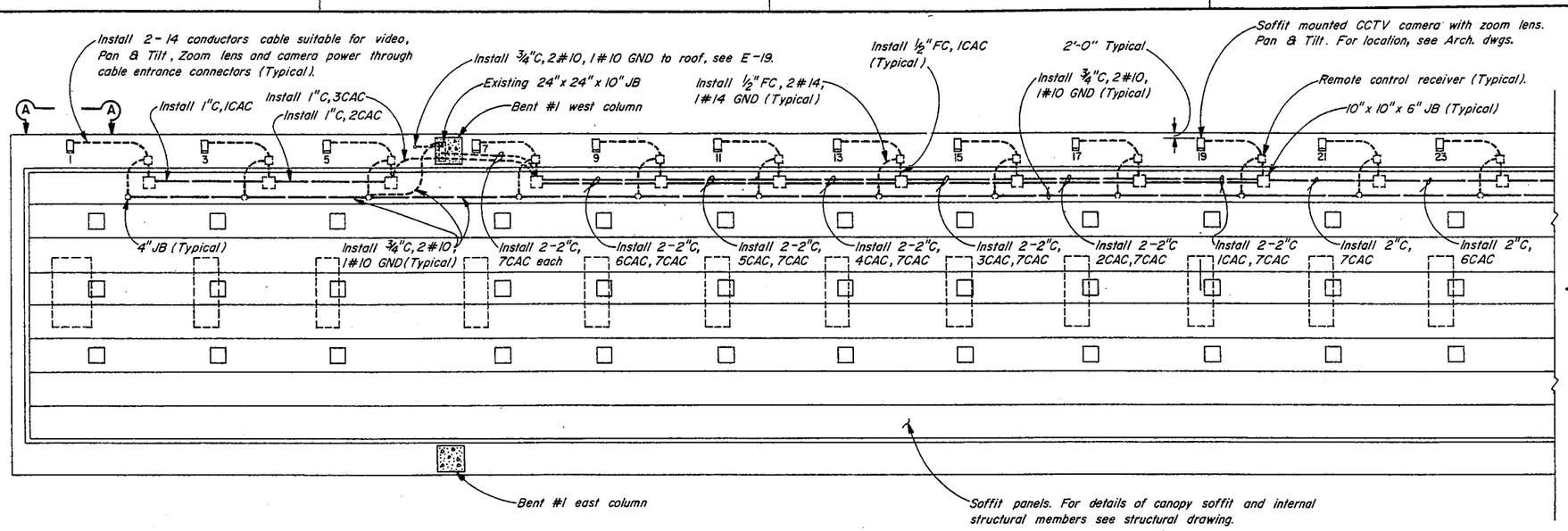

REFLECTED CANOPY SOFFIT PLAN

SCALE : ⅛"=1'

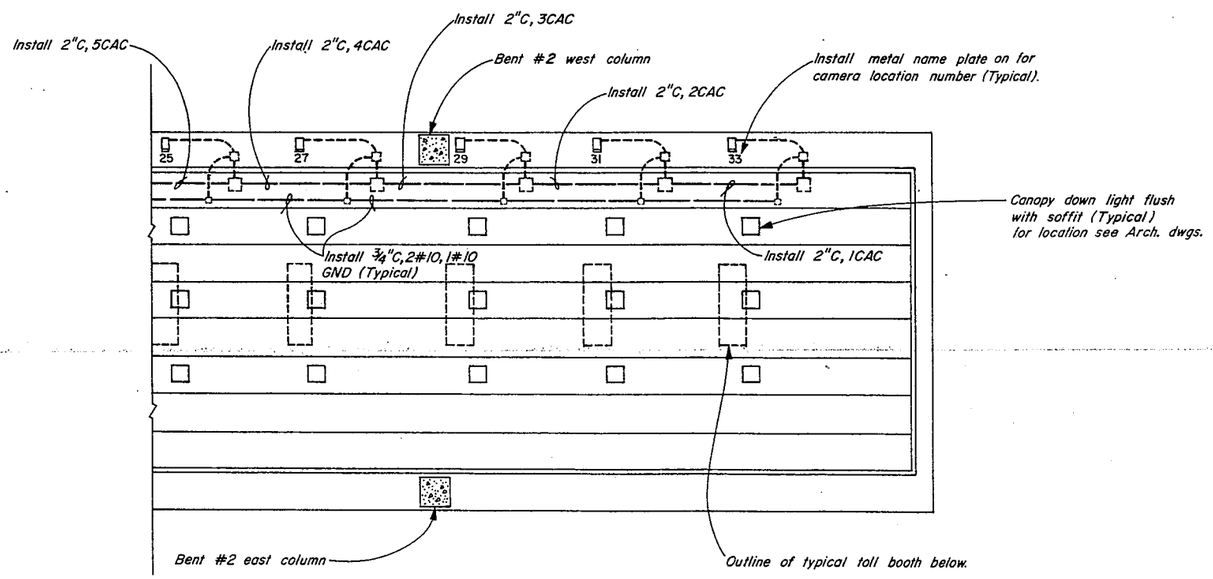

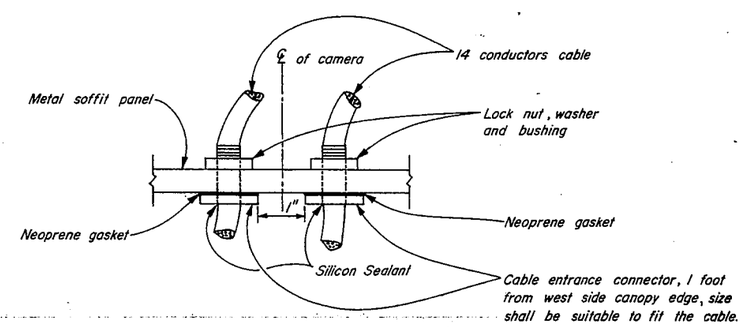

SECTION A-A

(TYPICAL FOR SOFFIT MOUNTED CAMERAS)
NO SCALE

NOTES:

1. This sheet shows details relating to CCTV system only.
2. Locations of electrical and electronic devices are approximate and symbolic only. Actual locations shall be as decided by Engineer.
3. Electrical and electronics devices shown are not scale.
4. All electrical devices including conduit, conductors, JB's, camera, camera mounting etc. shown in this sheet are new and shall be installed by Contractor unless otherwise noted.

REDUCED PLAN
USE SCALE BELOW
0 1 2 3
3 INCHES ON ORIGINAL PLAN

CCTV SYSTEM
CANOPY DETAILS

E-1

REVISED BY	
DATE REVISED	
DATE	
RC	LB
CALCULATED/DESIGNED BY	
CHECKED BY	
PROJECT ENGINEER	M. CHO

STATE OF CALIFORNIA - DEPARTMENT OF TRANSPORTATION
Caltrans

FORM DC-OE-8 SPECIAL (10/86)

FOR REDUCED PLANS ORIGINAL SCALE IS IN INCHES 0 1 2 3

CU 04334 EA 003181

DIST.	COUNTY	ROUTE	POST MILES TOTAL PROJECT	SHEET NO.	TOTAL SHEETS
04	Ala	80	2.0	60	68

Luis Batiza
ENGINEER

NO.

1-25-88
PLANS APPROVAL DATE

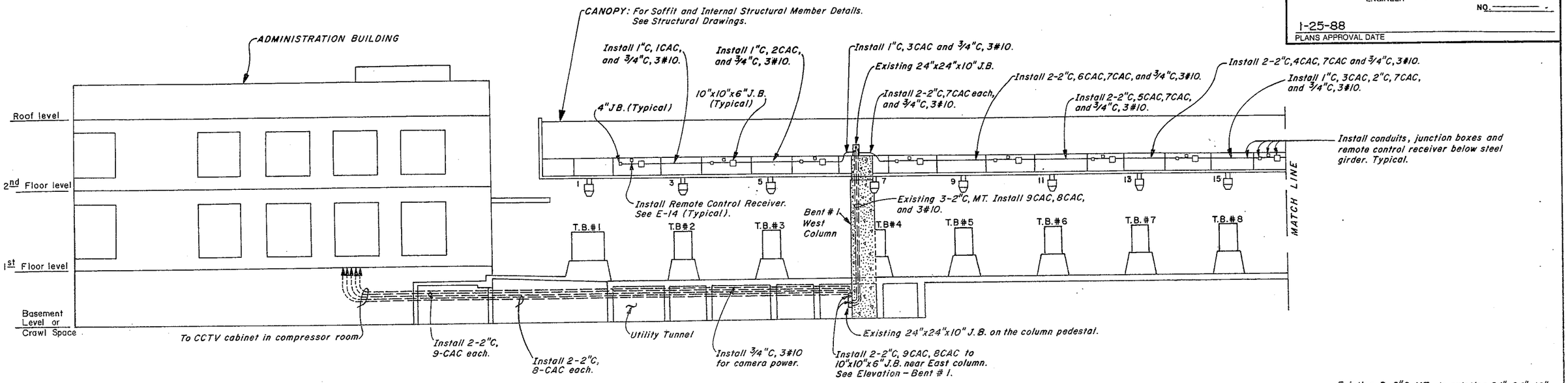

LONGITUDINAL SECTION

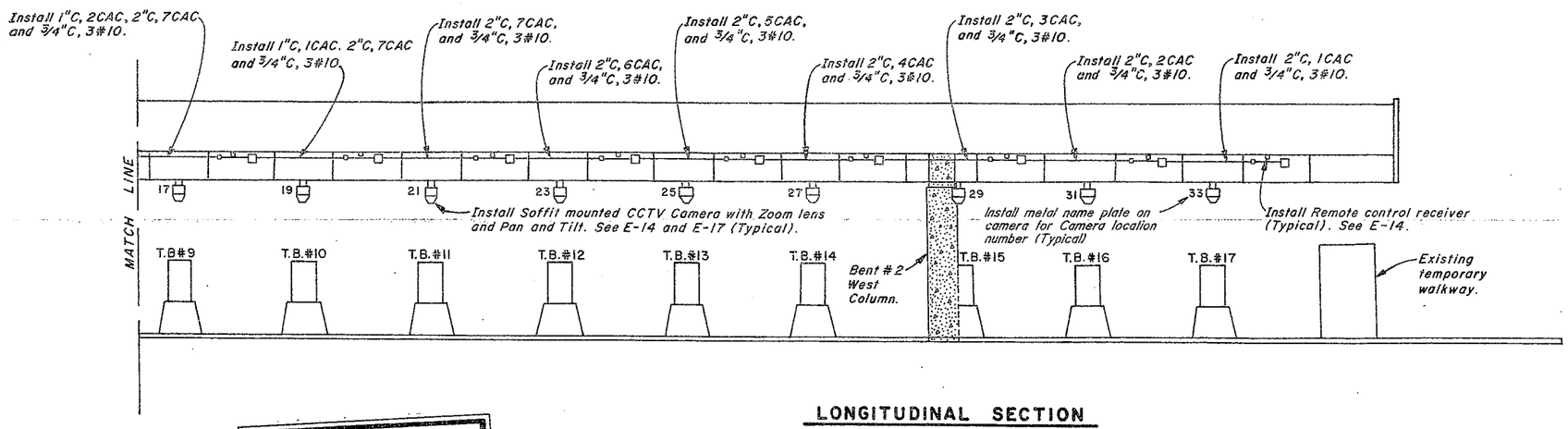

LONGITUDINAL SECTION

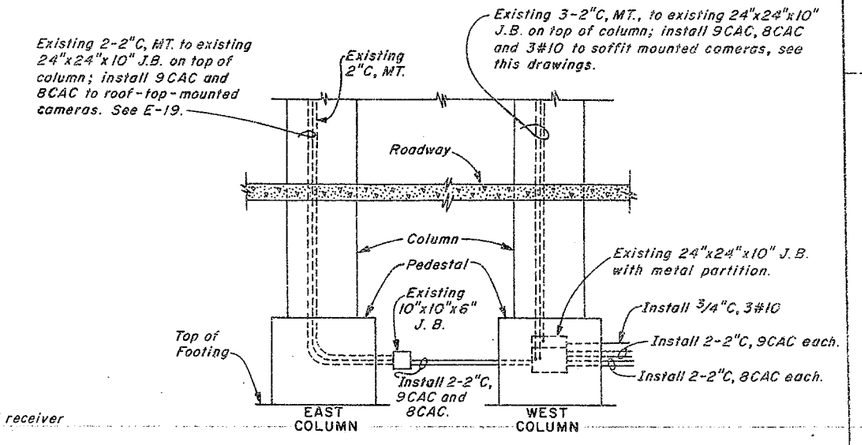

ELEVATION - BENT No. 1
NO SCALE

REDUCED PLAN
USE SCALE BELOW
0 1 2 3
3 INCHES ON ORIGINAL PLAN

NOTES:

1. The locations of electrical and electronic devices, conduit's route are approximate and symbolic only. Actual locations shall be decided by the Engineer.
2. This sheet shows details relating to CCTV system only.
3. Electrical and electronic devices shown are not to scale.
4. All conduits, junction boxes, conductors, cameras, and camera mountings, etc, and other electrical devices shown on this sheet are new and shall be installed by the Contractor unless otherwise noted.

APPROVED FOR INCLUSION IN THE STATE FIRE MARSHAL COASTAL RPI

CCTV SYSTEM

TOLL BOOTHS, CANOPY, AND ADMINISTRATION BUILDING

SCALE : 1/8" = 1'-0"

E-15

DESIGNED BY R.C. | CHECKED BY L.B. | REVISED BY | DATE REVISED

M. CHO

STATE OF CALIFORNIA • DEPARTMENT OF TRANSPORTATION

Caltrans

FORM DC-OE-92-PF (REV. 1/86)

FOR REDUCED PLANS ORIGINAL SCALE IS IN INCHES 0 1 2 3

CU 04334 | EA 003181

DIST.	COUNTY	ROUTE	POST MILES TOTAL PROJECT	SHEET NO.	TOTAL SHEETS
04	Ala	80	2.0	61	68

Luis Batiza
ENGINEER

NO.

1-25-88
PLANS APPROVAL DATE

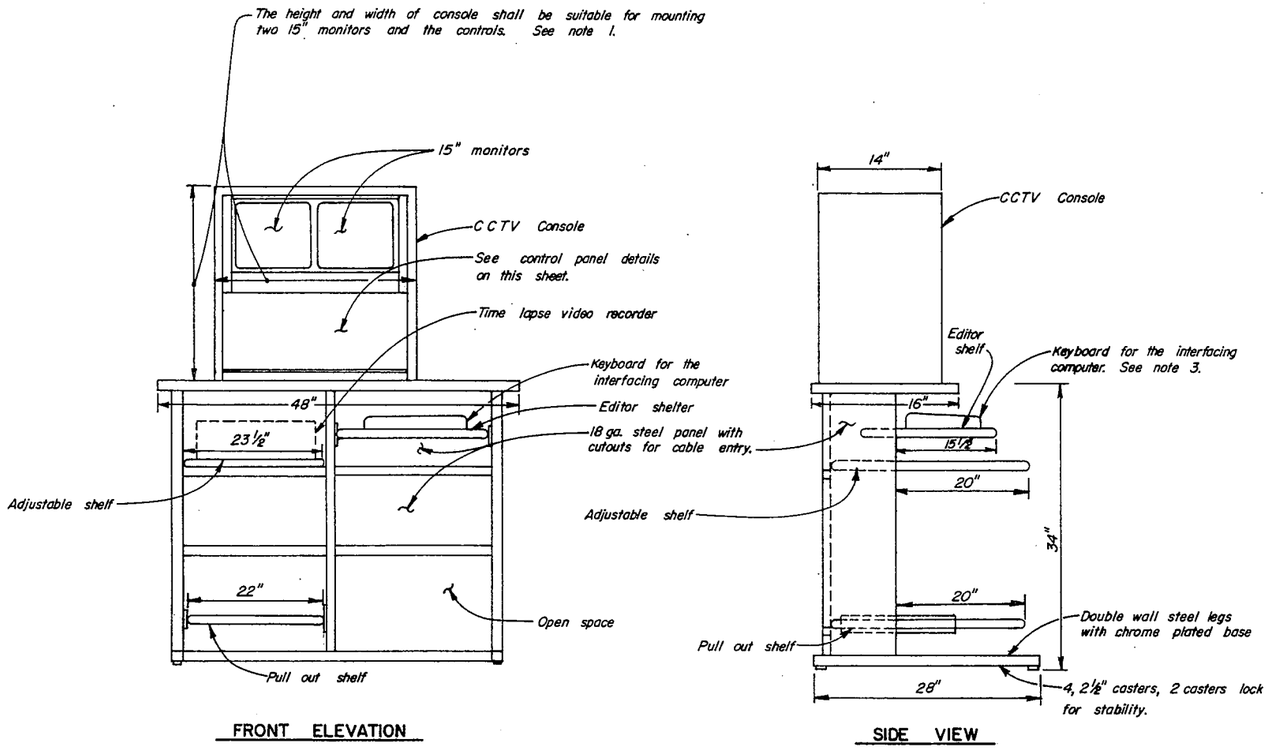

FRONT ELEVATION

SIDE VIEW

MONITOR CONSOLE STATION

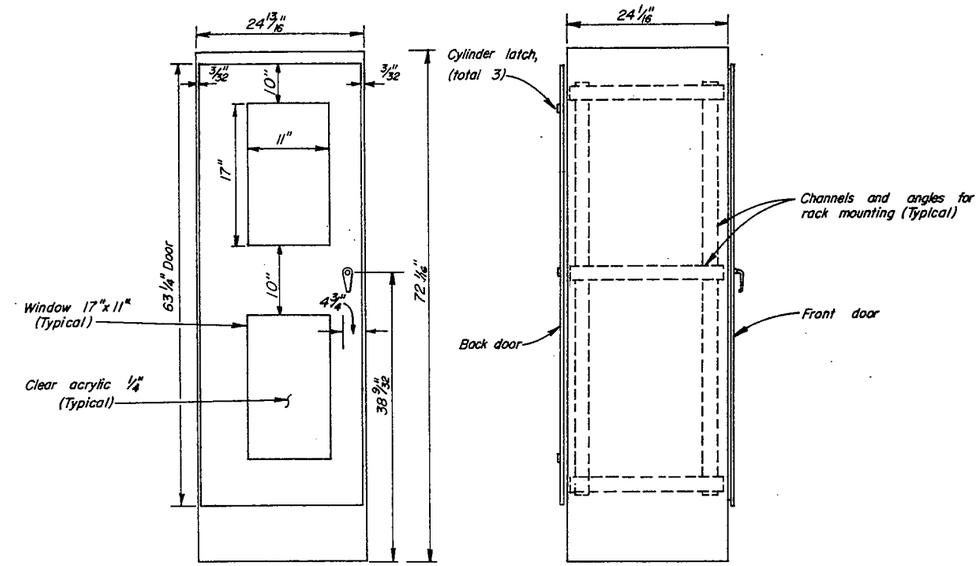

FRONT VIEW

SIDE VIEW

CCTV CABINET

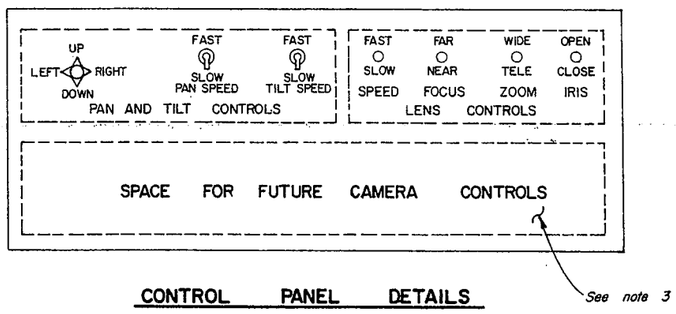

CONTROL PANEL DETAILS

REDUCED PLAN
USE SCALE BELOW
0 1 2 3
3 INCHES ON ORIGINAL PLAN

NOTES:

1. The Sergeants monitor console shall not display indoor cameras #35 and #36 installed in the Cashier's ready room. All the consoles shall be designed with controls for the total of 48 cameras. The 14 unused controls in Sergeant's consoles are for future camera controls. Each 12 unused controls in Captain's or Lieutenant's console are for future camera controls. The Lieutenant's console shall have priority interlock over the other two consoles and Captain's console shall have priority interlock over the Sergeant's console for the control of the pan & tilt and zoom lens operation.

2. All devices shown on this sheet are new.

3. The keyboard shall be designed to communicate between the operator and the interfacing computer. The operator shall be able to select camera number, mode of operation like manual or automatic, interval between each camera display etc, by pressing respective keys. If the above-mentioned functions cannot be provided by the keyboard system, seperate toggle switch controls shall be furnished and installed in each monitor console.

APPROVED
MECHANICAL PLANS ONLY
JUL 31 1987
STATE FIRE MARSHAL
COASTAL REGION

CCTV SYSTEM

MONITOR CONSOLE STATION AND CCTV CABINET

SCALE: NONE

E-16

CALCULATED/DESIGNED BY	RC
CHECKED BY	L.B.
DATE	
REVISED BY	
DATE REVISED	
PROJECT ENGINEER	M. CHO

STATE OF CALIFORNIA - DEPARTMENT OF TRANSPORTATION
Caltrans

FORM DC-OE-SPECIAL (10/86)

FOR REDUCED PLANS ORIGINAL SCALE IS IN INCHES 0 1 2 3

CU 04 334 | EA 003181

DIST.	COUNTY	ROUTE	POST MILES TOTAL PROJECT	SHEET NO	TOTAL SHEETS
04	Ala	80	2.0	62	68

Luis Batiza
ENGINEER

NO. _____

1-25-88
PLANS APPROVAL DATE

REDUCED PLAN
USE SCALE BELOW
0 1 2 3
3 INCHES ON ORIGINAL PLAN

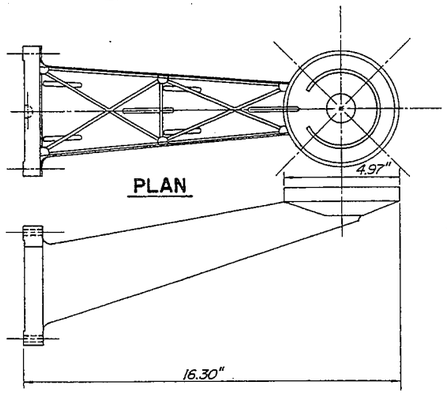

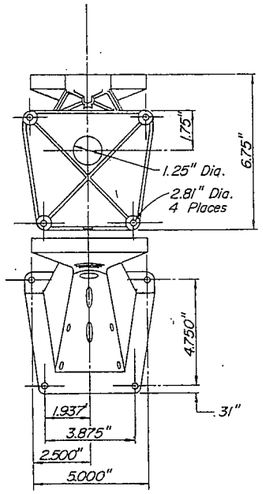

FRONT VIEW

SIDE VIEW

INDOOR CAMERA MOUNTING, WALL MOUNTING TYPE (TYPICAL)

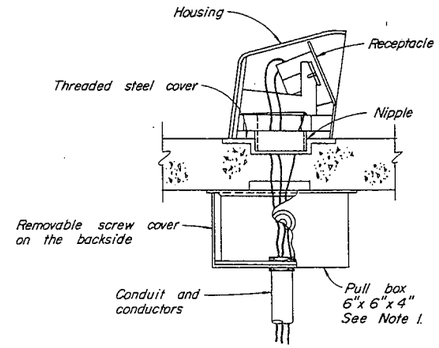

SECTION
NO SCALE

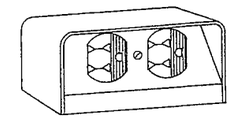

ELEVATION
NO SCALE

DETAIL 2, I.G. DUPLEX FLOOR OUTLET (TYPICAL)
4 3/8" x 3" x 2 5/8"

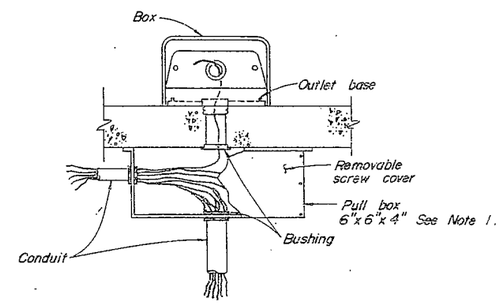

SECTION
NO SCALE

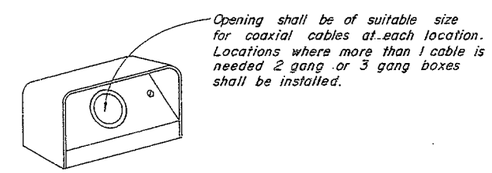

ELEVATION VIEW
NO SCALE

DETAIL 3, FLOOR BOX FOR CAC AND CONTROL CABLES (TYPICAL)
See Note 1

SYMBOLS AND ABBREVIATIONS
(APPLICABLE TO CCTV SYSTEM ONLY)

CAC	Co-axial cable
JB	Junction box
CB	Circuit breaker
GRD	Ground
C	Conduit
FC	Flexible conduit
CCTV	Closed circuit television monitor system
EQU	Equivalent
PTZ	Pan and tilt; zoom
PT	Pan and tilt

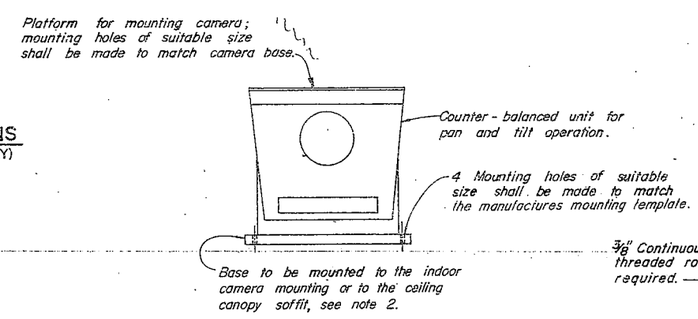

PAN AND TILT UNIT (TYPICAL)

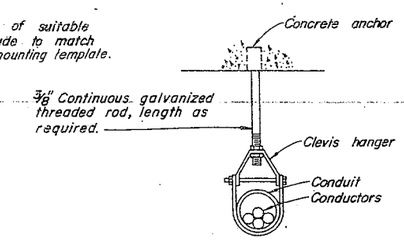

DETAIL 4
TYPICAL CONDUIT HANGER

NOTES:

1. Size shown for reference only. The dimensions of the pull box shall be suitable for the type and the number of cables, and conduits entering the box.
2. PT units for indoor cameras shall be installed on the wall mounts in the upright position. PT units for outdoor cameras shall be mounted to the canopy ceiling soffit panel in the inverted position. Two channels of suitable size shall be installed inside the canopy to reinforce the PT units and cameras.

APPROVED

CCTV SYSTEM MISCELLANEOUS DETAILS

SCALE: NONE

E-17

STATE OF CALIFORNIA - DEPARTMENT OF TRANSPORTATION
Caltrans

PROJECT ENGINEER M. CHO

CALCULATED DESIGNED BY P.P.
CHECKED BY L.B.
DATE REVISED
REVISED BY

FORM DC-OE-SPECIAL (10/86)

FOR REDUCED PLANS ORIGINAL SCALE IS IN INCHES 0 1 2 3

CU 04334

EA 003181

DIST.	COUNTY	ROUTE	POST MILES TOTAL PROJECT	SHEET NO.	TOTAL SHEETS
04	Ala	80	2.0	63	68

ENGINEER

NO.

1-25-88
PLANS APPROVAL DATE

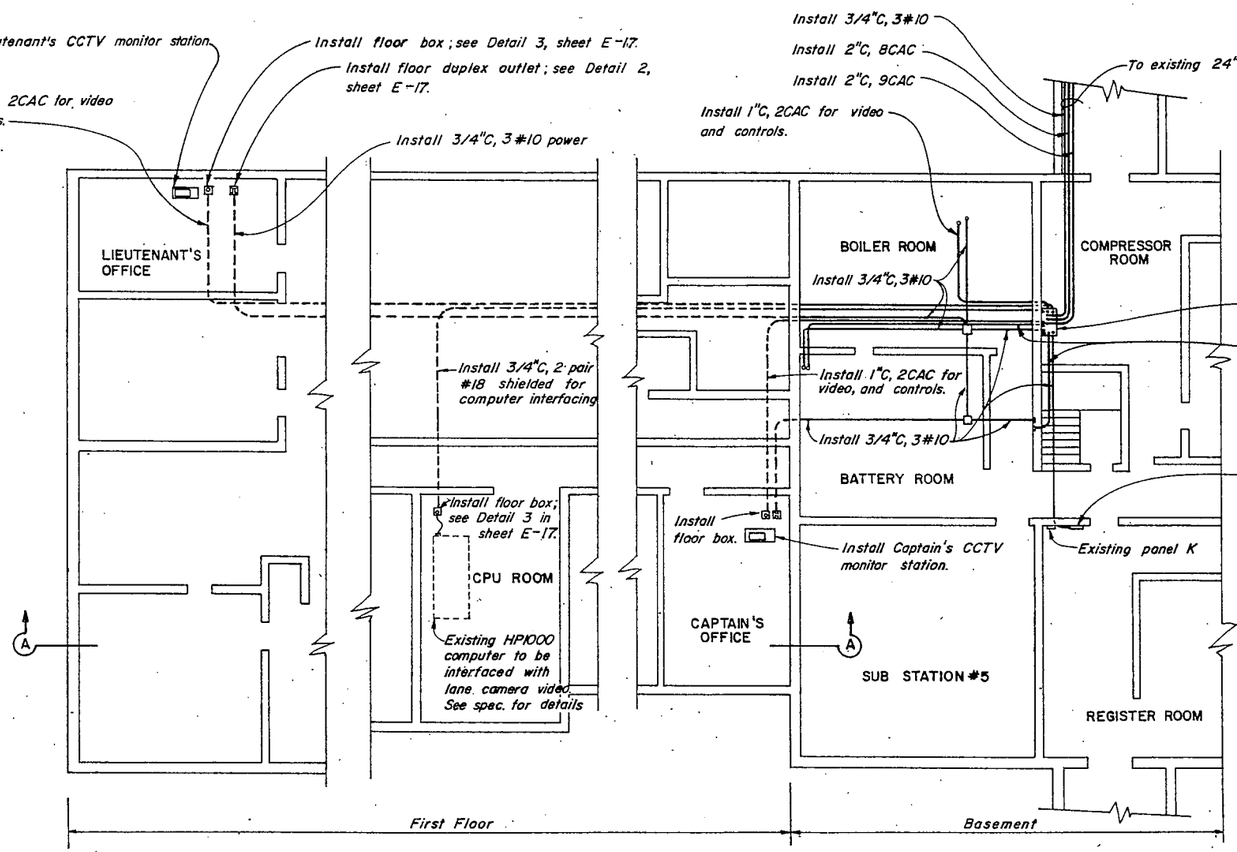

ADMINISTRATION BUILDING

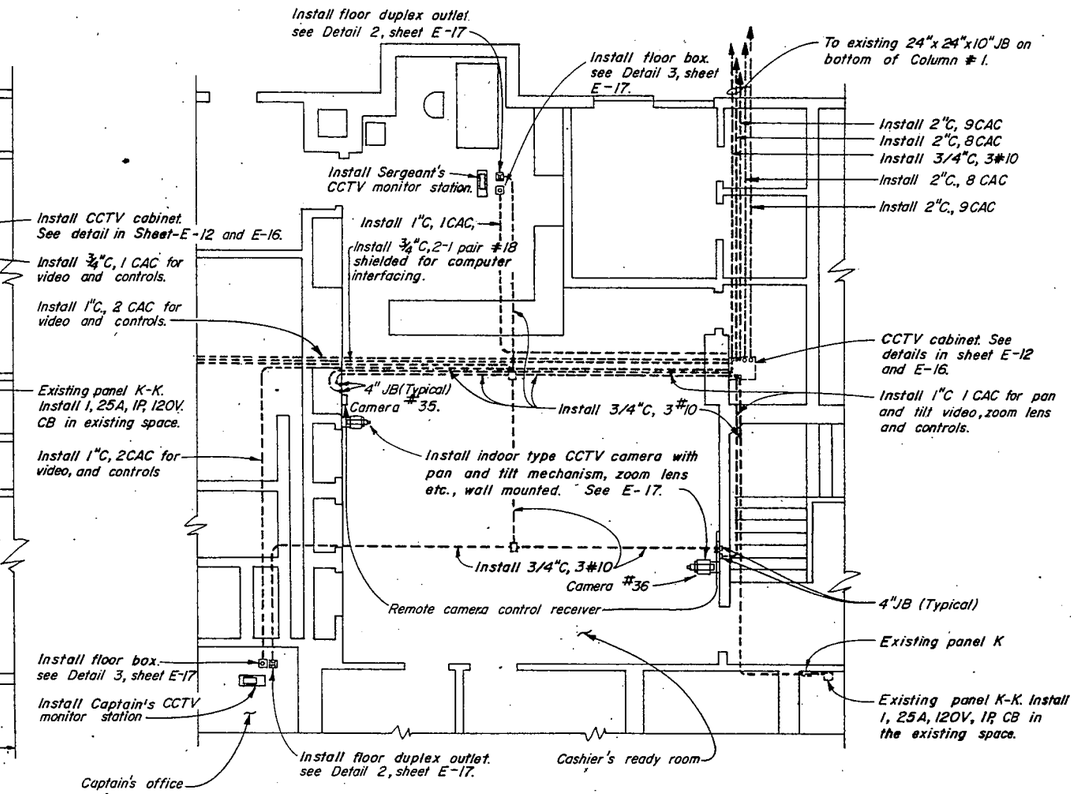

PARTIAL FIRST FLOOR PLAN

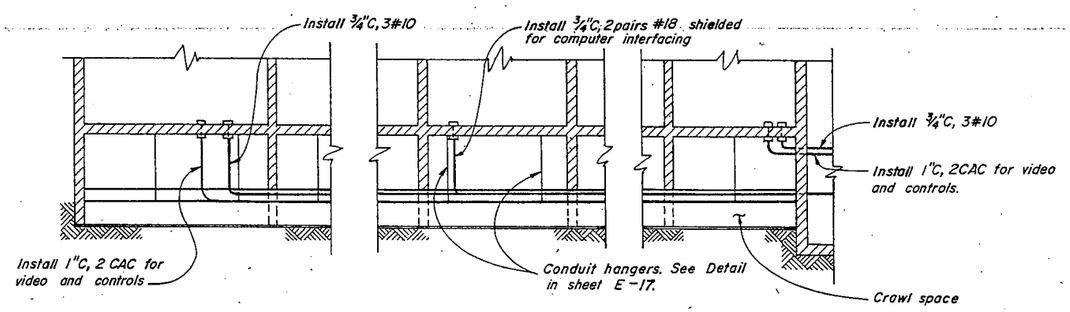

Section A-A

NOTE:

1. Plans do not show the connections from floor boxes to consoles. Connections from the floor boxes to the consoles shall be through ½" flexible conduit. Interconnection between video tape recorder and consoles shall be through RG-59 coaxial cables.
2. Conduit layout is symbolic only. Necessary adjustments shall be made in the route. Junction boxes, elbows, couplings, nipples, locknuts, etc. shall be furnished and installed where necessary.

REDUCED PLAN
USE SCALE BELOW
0 1 2 3
3 INCHES ON ORIGINAL PLAN

CCTV SYSTEM
ADMINISTRATION BUILDING DETAILS
SCALE: NONE

E-1

STATE OF CALIFORNIA - DEPARTMENT OF TRANSPORTATION
Caltrans

PROJECT ENGINEER M. CHO

CALCULATED/DESIGNED BY	DATE	REVISED BY	DATE REVISED
CHECKED BY			

FORM DC-OE-8 SPECIAL (10/86)

FOR REDUCED PLANS ORIGINAL SCALE IS IN INCHES 0 1 2 3

CU 04334 EA 003181

DIST.	COUNTY	ROUTE	POST MILES TOTAL PROJECT	SHEET NO.	TOTAL SHEETS
04	Ala	80	2.0	64	68*

Luis Batiza
ENGINEER

NO.

1-25-88
PLANS APPROVAL DATE

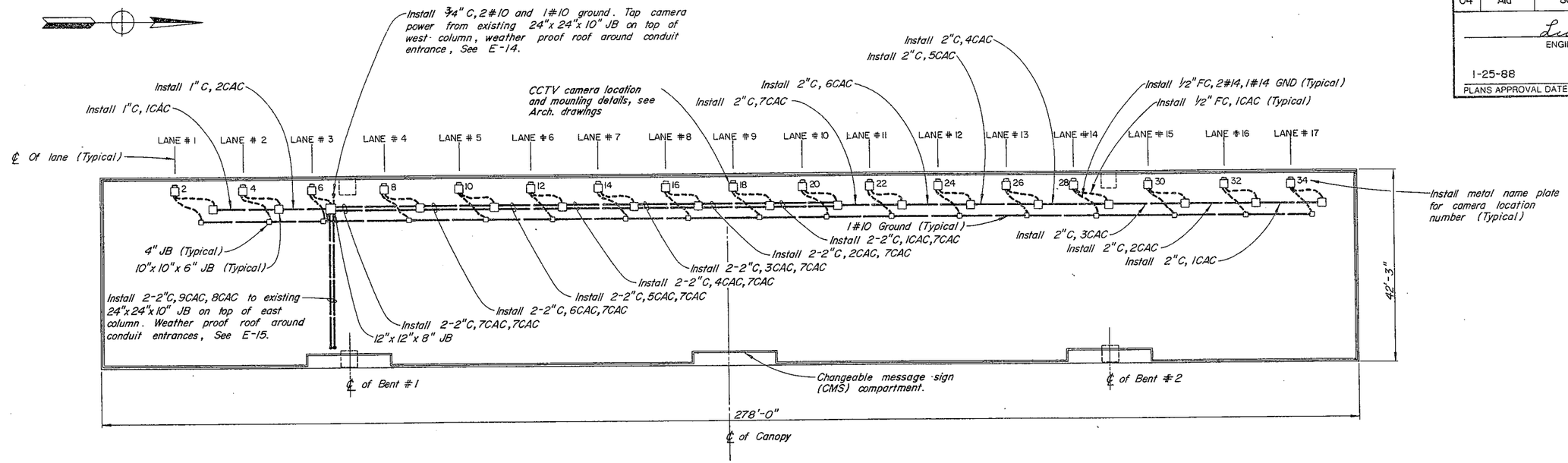

ROOF PLAN - CCTV CAMERA

NO SCALE

NOTES:

1. The location of electrical and electronic devices is approximate and symbolic only. Actual location shall be decided by the Engineer.
2. This sheet shows details relating to the roof top CCTV system only.
3. Weather proof all canopy roof opening for mounting CCTV equipment conduit entrances and junction boxes.
4. All electrical devices including conduits, junction, boxes conductors, cables cameras, camera mountings, etc. shown on this sheet are new and shall be installed by the Contractor unless otherwise noted.

REDUCED PLAN
USE SCALE BELOW
0 1 2 3
3 INCHES ON ORIGINAL PLAN

CCTV SYSTEM
CANOPY ROOF DETAILS
SCALE: AS SHOWN

E-19

REVISED BY | DATE REVISED
DESIGNED BY R.C. | CHECKED BY L.B.
PROJECT ENGINEER M. CHO
STATE OF CALIFORNIA - DEPARTMENT OF TRANSPORTATION
Caltrans

RM DC-OE-SPECIAL (10/86)

FOR REDUCED PLANS ORIGINAL SCALE IS IN INCHES 0 1 2 3

CU 04334 | EA 003181

DIST.	COUNTY	ROUTE	POST MILES TOTAL PROJECT	SHEET NO.	TOTAL SHEETS
04	Ala	80	2.0	65	68

Luis Batiza
ENGINEER

NO.

1-25-88
PLANS APPROVAL DATE

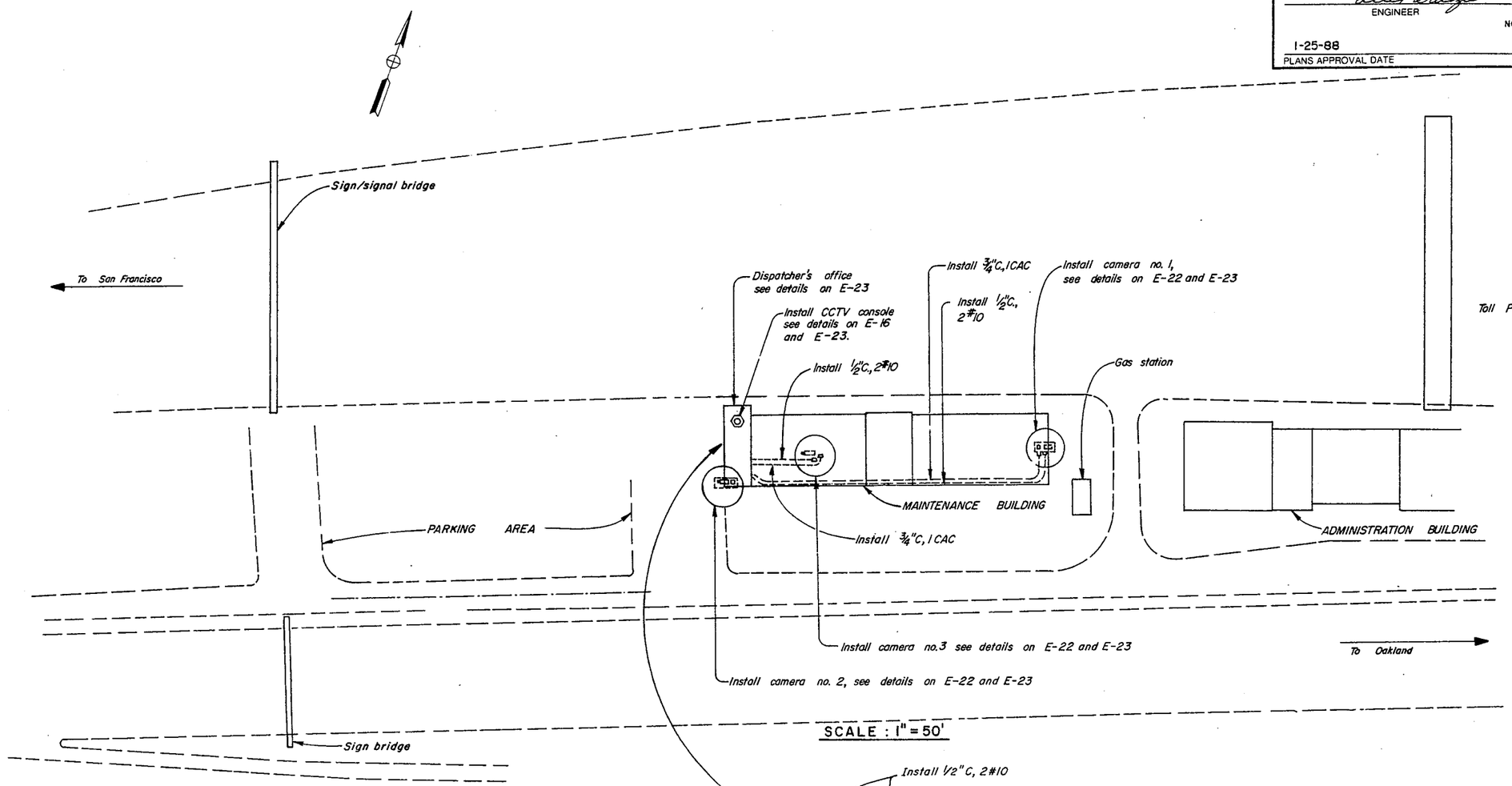

SCALE : 1" = 50'

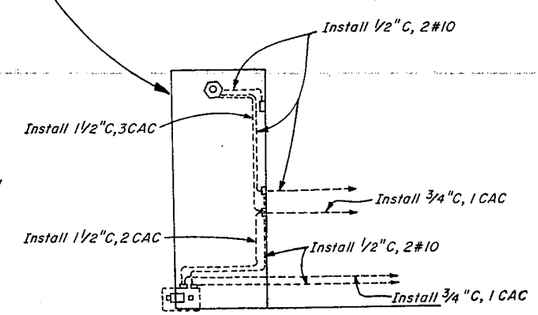

NO SCALE

NOTES:

1. All electrical and electronic devices shown on this sheet are new and shall be supplied and installed by Contractor unless otherwise noted.
2. This sheet does not show all the junction boxes, conduits, condulets, pull boxes, and appurtenances. The Contractor shall install these required items to meet the applicable standards and codes.
3. The locations of electrical and electronic devices shown are approximate only Actual locations shall be decided by the Engineer.
4. The electrical and electronic devices shown are not to scale and are symbolic only.

REDUCED PLAN
USE SCALE BELOW
0 1 2 3
3 INCHES ON ORIGINAL PLAN

APPROVED FOR FIRE AND LIFE SAFETY ONLY
JAN 7 1988
STATE FIRE MARSHAL COASTAL

CCTV SYSTEM DISPATCHER'S OFFICE
CAMERA LOCATIONS AND OVERALL CONDUIT LAYOUT
SCALE : AS SHOWN

E-2

CALCULATED/DESIGNED BY	PP	DATE	REVISED BY
CHECKED BY	LB		DATE REVISED

PROJECT ENGINEER M. CHO

STATE OF CALIFORNIA · DEPARTMENT OF TRANSPORTATION
Caltrans

FORM DC-OE-SPECIAL (10/86)

FOR REDUCED PLANS ORIGINAL SCALE IS IN INCHES 0 1 2 3

CU 04 334 EA 003181

DIST	COUNTY	ROUTE	POST MILES TOTAL PROJECT	SHEET NO	TOTAL SHEETS
04	Ala	80	2.0	66	68

Luis Batiza
ENGINEER
NO.

1-25-88
PLANS APPROVAL DATE

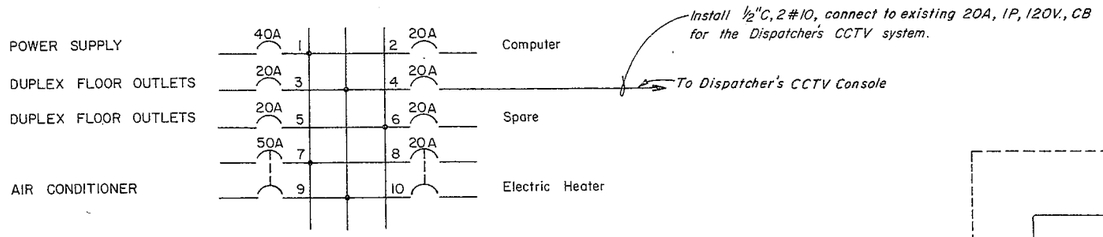

EXISTING DISPATCHER PANEL

120/208 V., 400A. MAIN BUS

REDUCED PLAN
USE SCALE BELOW
0 1 2 3
3 INCHES ON original PLAN

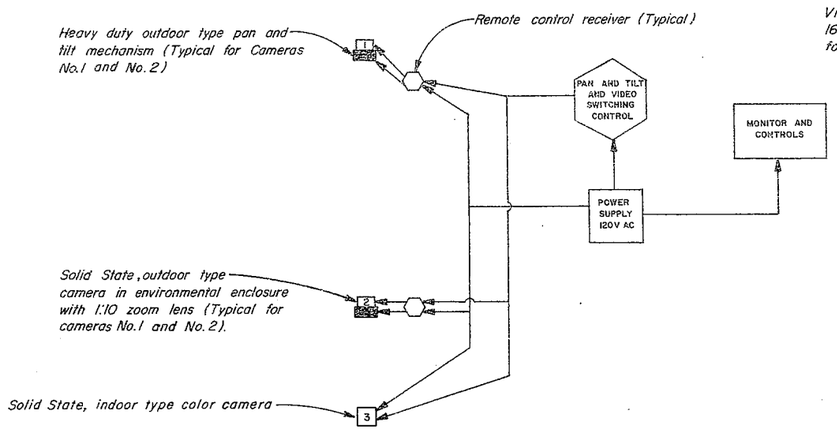

BLOCK DIAGRAM

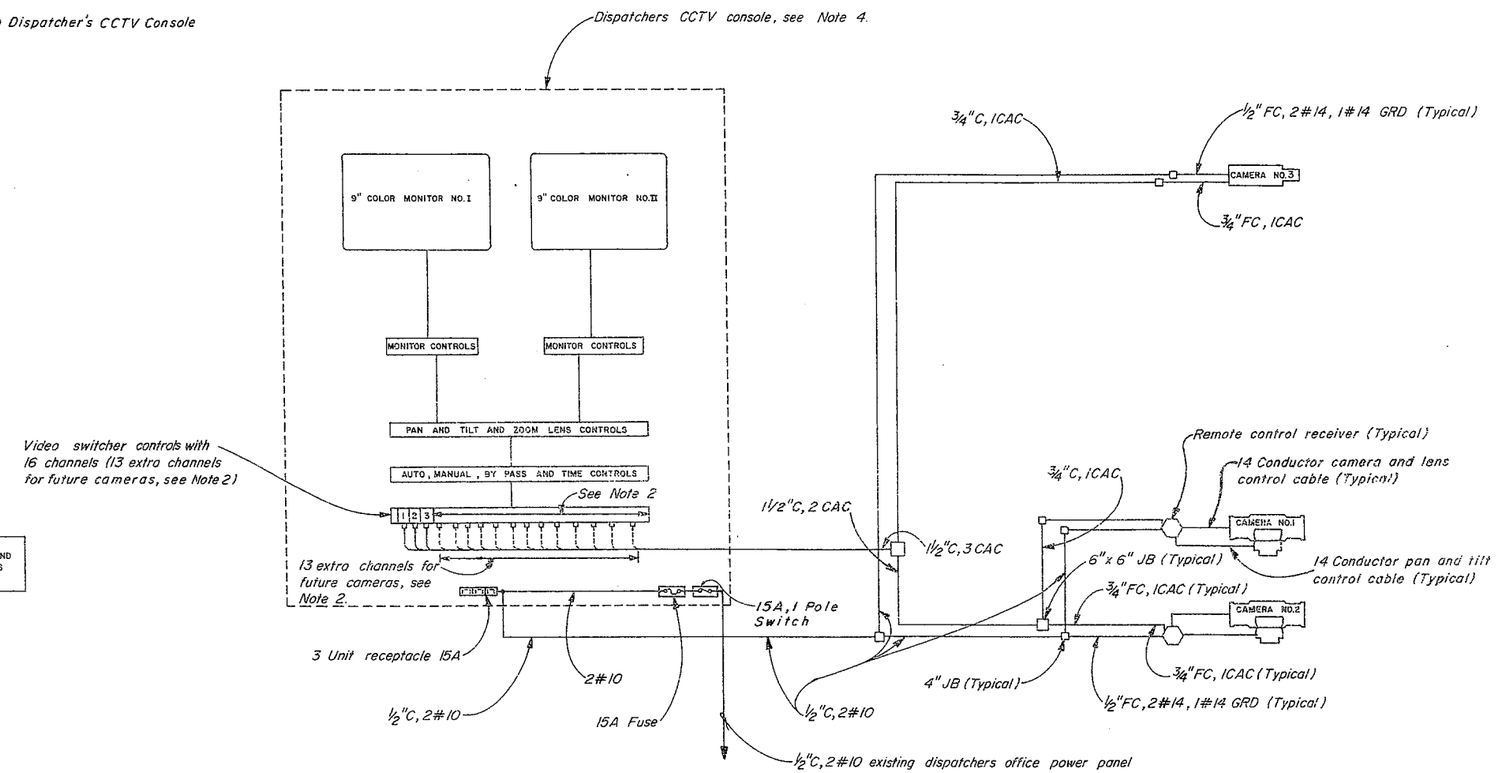

ONE LINE DIAGRAM

NOTES:

1. All devices shown on this sheet are new and shall be supplied and installed by the contractor unless otherwise noted.
2. The Dispatcher's office CCTV system console shall be designed and wired for 16 cameras including the 13 future cameras. Future cameras and their associated circuits outside the console are not part of this contract. All the controls and switches on the console shall be similar to those shown on sheet E-16 except the computer interfacing and keyboard.
3. The coaxial cable shall be RG-6/U from camera location to console and RG-59/U for interconnection inside the console.
4. The devices shown in the one line diagram and block diagram are only symbolic in nature. The contractor shall design and install the system in order to meet the functional requirements specified in the SPECIAL PROVISION.
5. Monitor I shall display all the cameras in sequence automatically for selected time interval. Monitor II shall display one of the operator selected cameras by means of its auto/manual/bypass selector switch.

APPROVED FOR USE
JAN 7 1988
STATE FIRE MARSHAL
COASTAL REGION

CCTV SYSTEM - DISPATCHER'S OFFICE

POWER PANEL, BLOCK DIAGRAM AND ONE LINE DIAGRAM

SCALE: NONE

E-21

STATE OF CALIFORNIA - DEPARTMENT OF TRANSPORTATION
Caltrans
PROJECT ENGINEER M. CHO
CALCULATED DESIGNED BY PP
CHECKED BY LB
DATE REVISED BY
DATE REVISED

FOR REDUCED PLANS ORIGINAL SCALE IS IN INCHES 0 1 2 3

CU 04334 EA 003181

ORM DC-OE-SPECIAL (10/88)

DIST.	COUNTY	ROUTE	POST MILES TOTAL PROJECT	SHEET NO	TOTAL SHEETS
04	Ala	80	2.0	67	68

Luis Batiza
ENGINEER

NO.

1-25-88
PLANS APPROVAL DATE

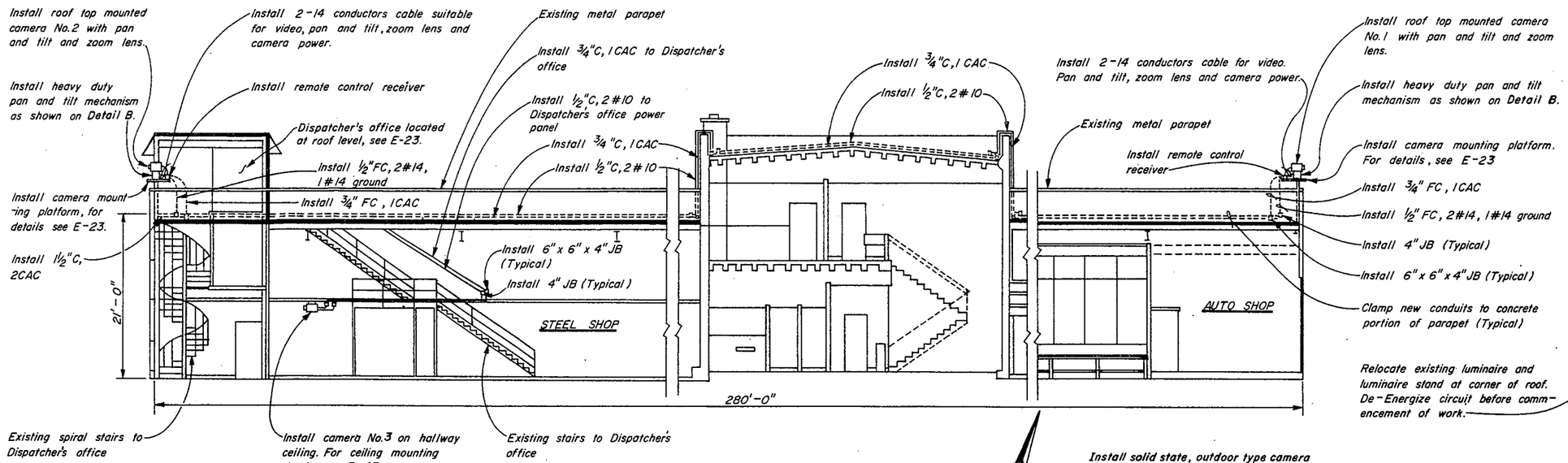

ELEVATION - MAINTENANCE BUILDING
NO SCALE

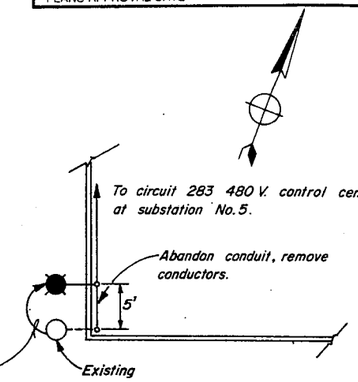

DETAIL A
NO SCALE

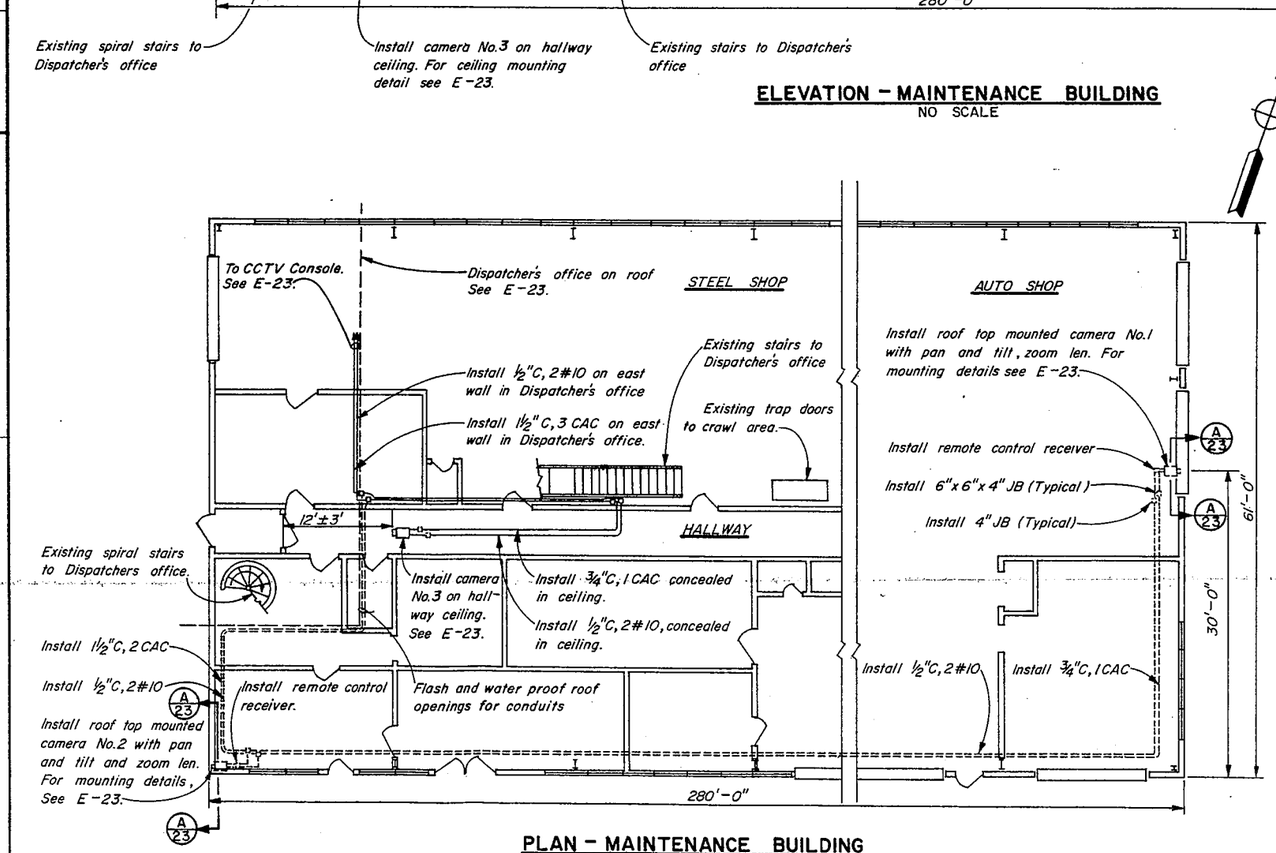

PLAN - MAINTENANCE BUILDING
SCALE : 1/8 = 1'-0"

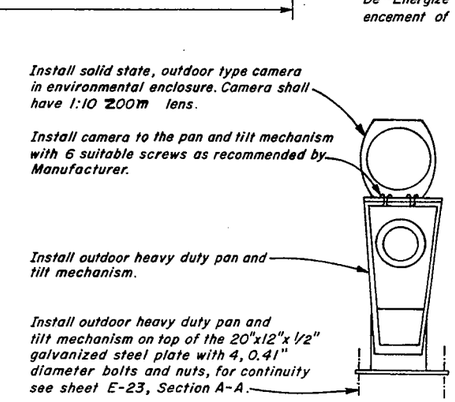

DETAIL B
NO SCALE

NOTES

1. Electrical and electronic devices shown in this plan are symbolic only and not to scale. Their locations are approximate and may be changed to suit field conditions as directed by the Engineer.
2. All electrical and electronic devices shown in this plan are new and shall be supplied and installed by the Contractor unless otherwise noted.
3. Necessary conduit clamps and junction boxes shall be installed to meet applicable NEC and Local codes.
4. Flash and water proof all roof openings for CCTV equipment conduit entrances and junction boxes.

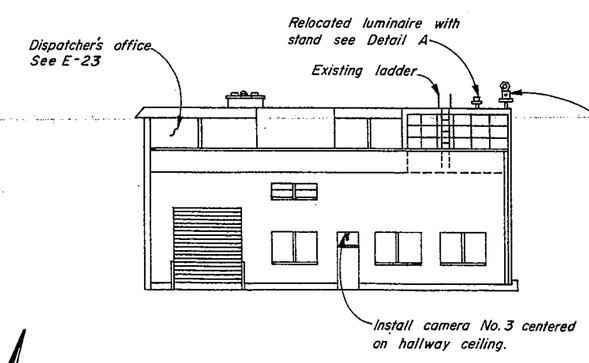

WEST ELEVATION
NO SCALE

REDUCED PLAN
USE SCALE BELOW
0 2 3
3 INCHES ON ORIGINAL PLAN

CCTV SYSTEM - DISPATCHER'S OFFICE
MAINTENANCE BUILDING
SCALE : AS NOTED

E-22

DATE	REVISED BY	DATE	REVISED BY

CALCULATED/DESIGNED BY: R C H
CHECKED BY: L B
PROJECT ENGINEER: M. CHO

STATE OF CALIFORNIA - DEPARTMENT OF TRANSPORTATION
Caltrans

FORM DC-OE-SPECIAL (10/86)

FOR REDUCED PLANS ORIGINAL SCALE IS IN INCHES 0 1 2 3

CU 04334 EA 003181

DIST	COUNTY	ROUTE	POST MILES TOTAL PROJECT	SHEET NO.	TOTAL SHEETS
04	Ala	80	2.0	68	68

Luis Batiza
ENGINEER

NO.

1-25-88
PLANS APPROVAL DATE

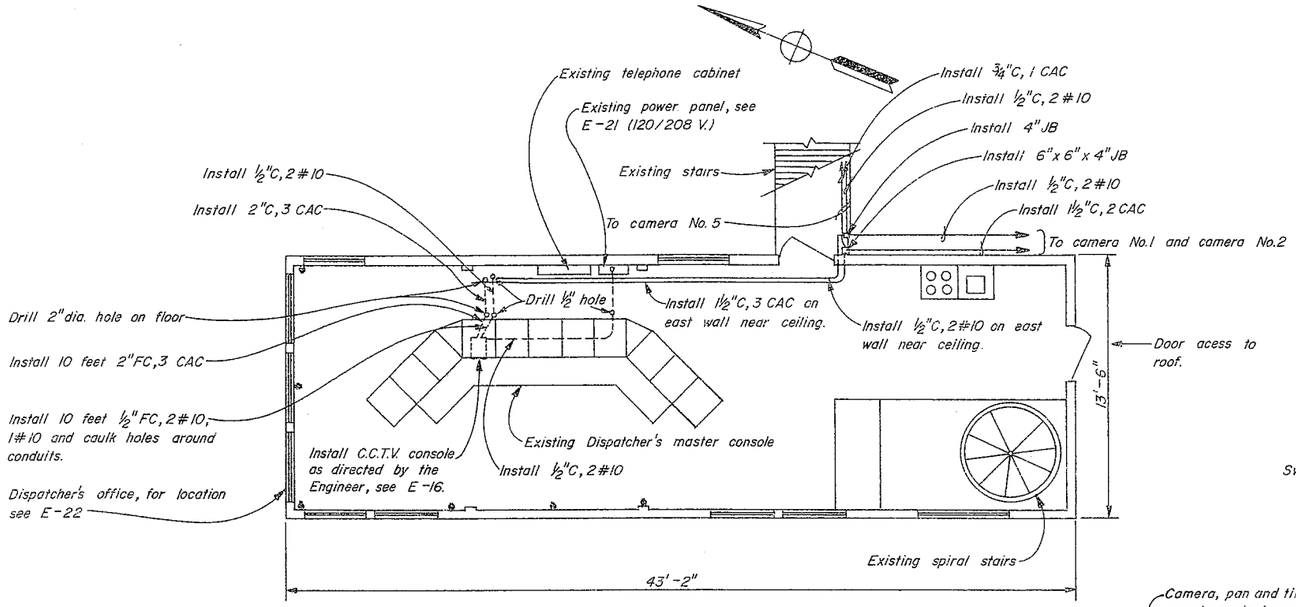

DISPATCHERS OFFICE
SCALE : ¼" = 1'-0"

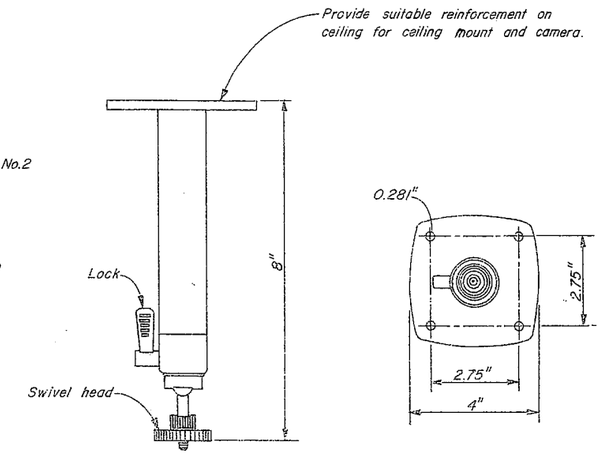

ADJUSTABLE CEILING MOUNT
(FOR CAMERA NO.5)
NO SCALE

NOTES :

1. Electrical and electronic devices shown in this plan are symbolic only and their locations are approximate.
2. All electrical and electronic devices shown in this plan are new and shall be supplied and installed by the Contractor unless otherwise noted.
3. Necessary conduit clamps and junction boxes shall be installed to meet applicable NEC and Local codes.
4. The entire camera unit including camera mounting platform shall withstand environmental effects, like wind load, rain and corrosion. Suitable reinforcement of existing metal parapet shall be provided.
5. All 4"x 3" TS (Structural steel tubing) shall be 1/4" thick.

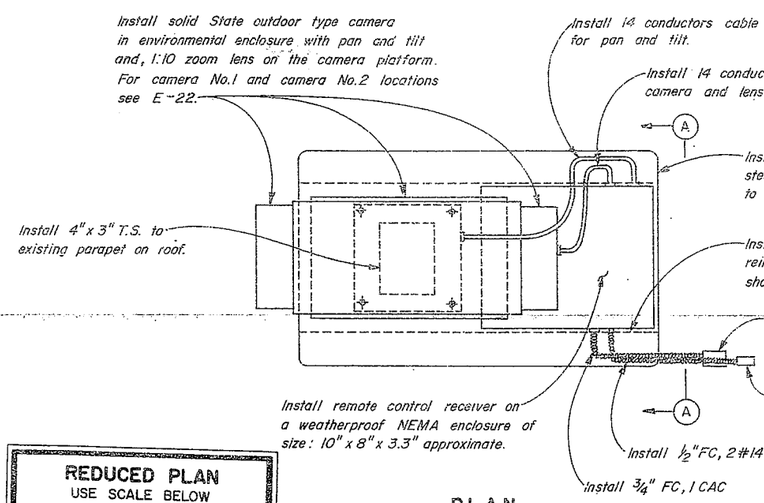

PLAN
CAMERA MOUNTING PLATFORM
NO SCALE

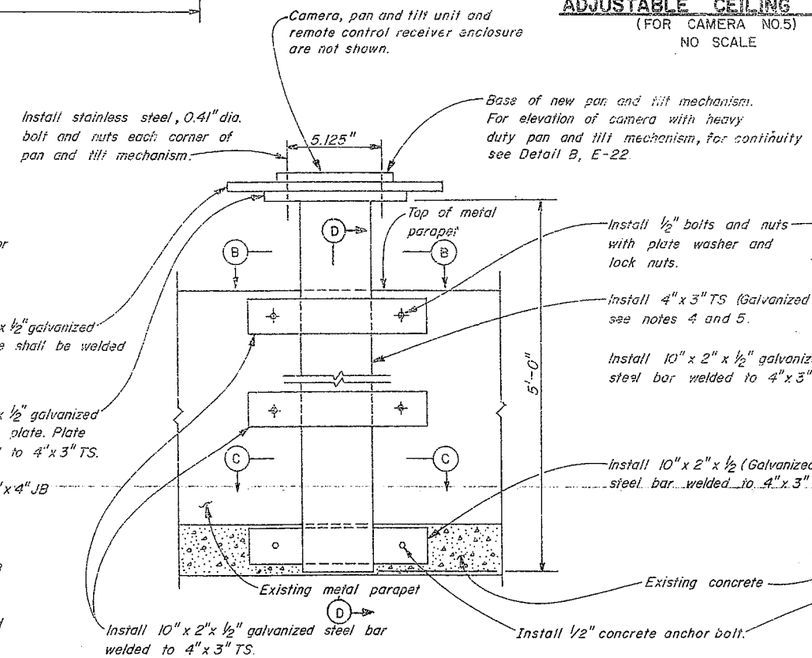

SECTION A-A
NO SCALE

SECTION B-B
NO SCALE

SECTION C-C
NO SCALE

SECTION D-D
NO SCALE

Install 4"x 3" TS (Galvanized). See Notes 4 and 5.

REDUCED PLAN
USE SCALE BELOW
0 1 2 3
3 INCHES ON ORIGINAL PLAN

JAN 1988
STATE FIRE MARSHAL
COASTAL REGION

CCTV SYSTEM - DISPATCHER'S OFFICE
MISCELLANEOUS DETAILS

SCALE : AS NOTED

E-23

STATE OF CALIFORNIA - DEPARTMENT OF TRANSPORTATION
Caltrans
PROJECT ENGINEER M. CHO
CALCULATED/DESIGNED BY RC
CHECKED BY LB
REVISED BY
DATE REVISED

FORM DC-OE-SPECIAL (10/86)

FOR REDUCED PLANS ORIGINAL SCALE IS IN INCHES 0 1 2 3

CU 04334 EA 003181