San Francisco-Oakland Toll Plaza (04 - Ala - 80 – PM 2.0 - PM 2.3)
Contract No. BATA-011
EA No. 4G2801 & 4G2901

INVITATION FOR BIDS

Contract Documents
NOTICE TO CONTRACTORS AND SPECIAL PROVISIONS

SFOBB TOLL PLAZA IMPROVEMENTS
IN ALAMEDA COUNTY IN OAKLAND ON ROUTE 80 FROM 2.0 MILE WEST TO 2.3 MILE OF THE SAN FRANCISCO-OAKLAND BAY BRIDGE

Issued for Bid July 6, 2012

For use in Connection with Standard Specifications **Dated May 2006**, Standard Plans **Dated May 2006** of the California Department of Transportation

BAY AREA TOLL AUTHORITY
Joseph P. Bort MetroCenter
101 Eighth Street
Oakland, California 94607-4700

BAY AREA TOLL AUTHORITY Contract No. BATA – 011

The Special Provisions contained herein have been prepared by or under the direction of the following Registered persons.

`

ROADWAY / TRAFFIC

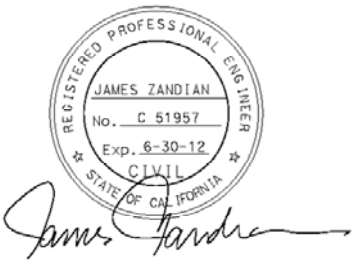

STRUCTURES

ELECTRICAL

ARCHITECTURE

TABLE OF CONTENTS

SECTION 1. INVITATION FOR BID 1
SECTION 2. FORWARD 6
2-1 Bay Area Toll Authority 7
2-2 General Description of Work 7
2-3 Description of the Contracting Process 8
2-4 Notice of Award 8
2-5 Certificates of Insurance 9
2-6 Return of Bid Security 10
2-7 Executed Contract 10
2-8 Notice to Proceed 10
SECTION 3. INSTRUCTIONS TO BIDDERS 11
1. Scope of Work 12
2. Mandatory Pre-Bid Conference 12
3. Examination of the Contract Documents 12
4. Examination of Site and Existing Conditions 19
5. Addenda to Contract Documents 19
6. Prevailing Wage Rates 19
7. Preparation and Submittal of Bid 20
8. Bid Security 22
9. Opening of Bids 22
10. Withdrawal of Bid 22
11. Conditional Bids 22
12. Single Bid Response 23
13. Award or Rejection of Bids 23
14. Basis of Award 23
15. Protest Procedures 24
16. Public Records 25
SECTION 4. CONTRACT FORMS 26
Construction Agreement 28
Performance Bond for Public Works 31
Payment Bond for Public Works 34
Alternate to Form W-9 38
SECTION 5. BID FORMS 41
BID FORM 42

Bidder's Bond 47
Designation of Subcontractors 49
Affidavit of Non-Collusion 50
Iran Contracting Act 51
Contractors Reference Form 53
SECTION 6. SPECIAL CONDITIONS 54
SC-1 Indemnification 55
SC-2 Insurance 55
SC-3 Contract Bonds 58
SC-4 Time for Performance 59
SC-5 Beginning of Work, Time of Completion, and Liquidated Damages 59
SC-6 Contract Data Requirements 61
SC-7 Permits and Fees 65
SC-8 Materials & Services 66
SC-9 Delivery, Unloading and Storage 67
SC-10 Work Sequence & Constraints 67
SC-11 Mobilization 68
SC-12 Sound Control Requirements 69
SC-13 Worker's Safety Provisions 70
SC-14 Hazardous Materials 75
SC-15 Construction Water Conservation 77
SC-16 Air Pollution Control 78
SC-17 Contractor Cooperation and Coordination 78
SC-18 Not Used 78
SC-19 Final Pay Quantities 78
SC-20 Schedule of Values 79
SC-21 Increase or Decreased Quantities, and Quantity Variation 79
SC-22 Project Close-Out Requirements - Record Drawings 80
SC-23 Progress Schedule 80
SC-24 Water Pollution Control Plan (WPCP) 89
SC-25 Surface Mining and Reclamation Act 90
SC-26 Laboratory 90
SC-27 (Not Used) 90
SC-28 Partnering 90
SC-29 Bridge Tolls 91

SC-30 Value Engineering Change Proposals (VECP) 91
SC-31 Alternative Methods of Construction 93
SC-32 Highway Construction Equipment 93
SC-33 Quality Assurance Program 94
SC-34 Conformity With Contract Documents and Allowable Deviations 94
SC-35 Use Of Materials Found On The Work 94
SC-36 Certificates of Compliance 94
SC-37 Environmental Coordination and Cooperation 94
SC-38 Bird Protection 96
SC-39 Final Inspection and Acceptance 97
SC-40 Dust Control 97
SC-41 Weight Limitations 98
SC-42 Public Convenience and Safety 100
SC-43 Flagging 106
SC-44 Clearing and Grubbing 107
SC-45 Equipment and Plants 107
SC-46 Preservation of Property 108
SC-47 Utilities 109
SC-48 Sanitary Facilities 109
SC-49 Measurement of Quantities 109
SC-50 Contract Data Requirements List 112
SC-51 Technical Submittals List 114
SECTION 7. GENERAL CONDITIONS 116
7.1 Legal Responsibilities and Relationships 117
GC-1 Applicable Law and Jurisdiction 117
GC-2 Compliance with Laws and Regulations 117
GC-3 Contractors' Licensing Requirements 117
GC-4 Independent Contractor 117
GC-5 Permits, Licenses, Fees and Notices 118
GC-6 Nondiscrimination 118
GC-7 Prohibited Interests 119
GC-8 Labor Provisions 119
GC-9 Hazardous Materials or Unusual Conditions 121
GC-10 Organization Conflicts of Interest 121
GC-11 Not Used 122

GC-12 Archaeological/Historical Discoveries 122
GC-13 Not Used 122
GC-14 Patent Rights 122
GC-15 Intellectual Property, Copyright and Patent Infringement 122
GC-16 Rights in Technical Data 123
GC-17 Ownership of Work and Material 124
GC-18 Title and Risk of Loss 124
GC-19 Assignment and Delegation 124
GC-20 Subcontracts 124
GC-21 Waiver and Non-waiver 124
GC-22 Antitrust Claims 125
GC-23 Stop Notices 125
GC-24 Authorized Representatives 125
GC-25 Notices and Communications 126
GC-26 Pre-Construction Meeting 127
GC-27 Project Meetings 128
GC-28 Publicity Releases 128
GC-29 Notice to Proceed 128
GC-30 Time of Completion 129
GC-31 Progress Schedule 129
GC-32 Excusable Delays and Extensions of Time 129
GC-33 Failure to Complete the Work on Time 129
GC-34 Not Used 130
GC-35 Temporary Construction Facilities and Utilities 130
GC-36 Character of Workmen 130
GC-37 Working Environment 130
GC-38 Public Convenience and Safety 130
GC-39 Cooperation/Coordination and Work by Others 131
GC-40 Security 131
GC-41 Product Options, Supplier Approval and Substitutions 131
GC-42 Source of Materials 132
GC-43 Submittal of Shop Drawings, Product Data and Samples 132
GC-44 Not Used 133
GC-45 Protection and Restoration of Property 133

GC-46 Utility Paint Markings....134
GC-47 Not Used....134
GC-48 Inspection....134
GC-49 Certificates of Compliance and Testing....134
GC-50 Removal of Rejected or Unauthorized Work....136
GC-51 Disposal of Materials....136
GC-52 Protection of Completed Portions of Work....137
GC-53 Cleanup....137
GC-54 Redlined Construction Drawings....137
GC-55 Final Inspection and Acceptance of All or a Portion of the Work....137
GC-56 Compensation....138
GC-57 Increased or Decreased Quantities and Quantity Variation....139
GC-58 Certified Payrolls....139
GC-59 Invoicing and Progress Payments....140
GC-60 Force Account Payment....145
GC-61 Prompt Payment....150
GC-62 Final Payment....151
GC-63 Project Records....151
GC-64 Not Used....152
GC-65 Change Requests and Change Notices....152
GC-66 Change Order....153
GC-67 Differing Site Conditions....153
GC-68 Claims....154
GC-69 Suspension of the Work....157
GC-70 Termination for Convenience or in the Public Interest....157
GC-71 Termination for Default....158
GC-72 Contractor's Duties Upon Termination....158
GC-73 Warranty....159
GC-74 Warranty Work....159
GC-75 Warranty on Replaced Parts....159
GC-76 Systematic Failures....160
GC-77 Iron Contracting Act of 2010....160
SECTION 8. MISCELLANEOUS....161
8-1 Prequalified and Tested Signing and Delineation Materials....162
8-2 Concrete....169

SECTION 9. (BLANK) **182**
SECTION 10. CONSTRUCTION DETAILS **183**
10-1 Order of Work 184
10-2 Water Pollution Control 184
10-3 Construction Site Management 192
10-4 Project Appearance 205
10-5 Temporary Concrete Washout Facility 206
10-6 Temporary Fence 210
10-7 Scaffolding 211
10-8 Cooperation 213
10-9 Progress Schedule (Critical Path Method) 213
10-10 Existing Highway Facilities 216
10-11 Clearing and Grubbing 217
10-12 Material Containing Lead 217
10-13 Remove Concrete 220
10-14 Waterproofing 221
10-15 Construction Area Traffic Control Devices 223
10-16 Construction Area Signs 225
10-17 Traffic Management Plan 227
10-18 Maintaining Traffic 229
10-19 Closure Requirements and Conditions 235
10-20 Impact Attenuator Vehicle 238
10-21 Traffic Control System For Lane Closure 240
10-22 Portable Changeable Message Signs 242
10-23 Maintain Toll Plaza Signal System 244
10-24 Temporary Crash Cushion Module 246
10-25 Concrete Structures 248
10-26 Reinforcement 251
10-27 Clean and Paint Existing and New Concrete and Steel Surfaces 251
10-28 Crash Cushion - Quadguard System 260
10-29 Furnish Sign 262
10-30 Install Roadside Sign Panel on Existing Post 267
10-31 Reset Roadside Sign 267
10-32 Remove Stairway No. 7 267
SECTION 12. ARCHITECTURAL SPECIFICATIONS **269**

12-1.1 Toll Plaza Recladding....269
12-1.2 Toll Plaza Lighting....271
12-1.3 Paint Toll Plaza Booth....272
12-1.4 Remove Existing Pump Station Building....272
12-1.5 Pump Station Building....274
12-1.6 Pump Station Building Electrical....276
12-2.1 Selective Structure Demolition....277
12-2.2 Cast-In-Place Concrete....282
12-2.3 Structural Steel Framing....285
12-2.4 Steel Decking....298
12-2.5 Cold-Formed Metal Framing....305
12-2.6 Metal Fabrications....315
12-2.7 Rough Carpentry and Sheathing....330
12-2.8 Composite Wall Panels....332
12-2.9 Ethylene-Propylene-Diene-Monomer (Epdm) Roofing....344
12-2.10 Roof Accessories....356
12-2.11 Hollow Metal Doors and Frames....359
12-2.12 Door Hardware....363
12-2.13 Louvers and Vents....377
12-2.14 Cutting and Patching....382
12-2.15 Field Engineering....385
SECTION 13 SIGNALS, LIGHTING AND ELECTRICAL SYSTEMS....387
13-1 Description....388
13-2 Abbreviations....389
13-3 Cost Break-Down....390
13-4 Maintaining Existing Electrical Systems....391
13-5 Construction Responsibility....392
13-6 Conduit....392
13-7 Support Hardware for Conduits....394
13-8 Pull Boxes, Splice Boxes and Junction Boxes....395
13-9 Conductors, Cables and Wiring....396
13-10 Lighting....401
13-11 Wiring Devices....405
13-12 Seismic Anchoring....406
13-13 Bonding and Grounding....406

13-14 Electrical Equipment 410
13-15 Arc Flash Hazard Labeling 412
13-16 Electrical Equipment Identification and Labeling 412
13-17 Removing, Reinstalling or Salvaging Electrical Equipment 414
13-18 Closeout Submittals 415
13-19 Payment.....415

SECTION 1. INVITATION FOR BID

LETTER OF INVITATION

For
SFOBB TOLL PLAZA IMPROVEMENTS

Dear Contractor:

The Bay Area Toll Authority (BATA) invites your firm to respond to this Invitation for Bid (IFB) for:

SFOBB TOLL PLAZA IMPROVEMENTS

BATA is soliciting bids for the construction of **SFOBB TOLL PLAZA IMPROVEMENTS** at the San Francisco - Oakland Bay Bridge Toll Plaza (see description of project in Section 2-2, General Description of Work). The project is part of the corridor improvements that are anticipated to be completed prior to the new SFOBB East Span opening in late 2013.

This letter, together with Contract Documents/Special Provisions, Bid Forms and Project Plans comprise the IFB for this project. Responses to the IFB are to be submitted in accordance with the instructions stated herein.

Bid Submission

Interested bidders must submit their bids in sealed envelopes no later than 2:00 p.m. on August 21, 2012. **Bids received after that date and time will not be considered**. **All bids must be completed and submitted on the enclosed Bid Forms, in Section 5 of this IFB, in order to be considered.**

BATA Point of Contact

A submitted bid shall be considered a firm offer to provide the services described for a period of one hundred twenty (120) days from the date of bid opening.

Bids and all inquiries relating to this IFB shall be submitted to the Project Manager at the address shown below. E-mail inquiries may be directed to <sbaker@mtc.ca.gov>.

Stephen Baker, Project Manager
Bay Area Toll Authority
Joseph P. Bort MetroCenter
101 Eighth Street
Oakland, CA 94607-4700
510/817-5892

Bid Guaranty

Bids must be accompanied by a bid guaranty in the form of a cashier's check, a certified check, or a bid bond executed by an admitted surety insurer ("A 7" Rating or better), in

the amount of 10% of the bid amount, payable to BATA. Such check or bond shall be given as a guaranty that the Bidder will, within ten (10) days of being requested to do so by BATA, enter into a contract and provide the required performance and payment bonds. If a Bidder's bond is furnished, it must conform the form provided with the bid documents herein.

If the Bidder to whom the work has been awarded refuses or fails to accept the contract and/or provide the required bonds within the specified time, the check shall be forfeited to BATA or the principal and surety on the bond shall be liable to BATA for the principal amount thereof in accordance with its terms. Bidder guarantees will be held until the contract has been finally executed, after which all Bidders' guarantees except any guarantees which have been forfeited, will be returned to the respective Bidders whose bids they accompany, but in no event will Bidder's securities be held by BATA beyond one hundred twenty (120) days from the time set for receiving bids.

References

Bidders must provide **at least three (3) references** for work performed by the bidder or bidder's subcontractor for work similar to the work described in this IFB. The reference information shall include:

1. Name, address, contact person, email address, and telephone number of client.
2. Description of work performed that is similar to the work requested in this IFB, including contract amount and construction/installation start and completion date.
3. Bidder or bidder's subcontractor role in the construction and installation services provided, including key personnel. BATA may request any additional information to substantiate the bidder's references, as it deems appropriate.

Pre-Bid Conference

A mandatory pre-bid conference will be held on Monday, July 23, 2012 at 10 am PST at BATA offices located at Joseph P. Bort MetroCenter, 101 Eighth St, Oakland CA, 94607, Auditorium. Attendance at the pre-bid conference is mandatory.

Specifications and Schedule

The specifications and schedule for this project are described herein. The IFB also contains substantive requirements with which Bidders must fully comply in order to guarantee responsiveness.

The time of completion for all construction work shall not be more than **285 calendar days**, commencing on the **sixth (6) calendar day** following issuance of the Notice of Award by BATA.

Bid Evaluation

Bids will be initially evaluated for responsiveness and adherence to the IFB. Quality and customer service are of the highest importance. In order to ensure superior service, references

will be checked, and bidders may be required to provide additional information verifying their experience.

A contract, if awarded, will be to the responsible bidder submitting the lowest responsive bid, as indicated in the "Total Bid for Comparison" space on the Bid Form #1 Schedule of Quantities and Prices in Section 5.

Performance and Labor & Materials Payment Bonds

Prior to contract award, BATA will require both a Performance and Labor & Materials Payment Bond, executed by an admitted surety insurer with Best Guide of A7 or better and issued by a surety acceptable to BATA. Each bond shall be in a sum not less than 100% of the Total Contract Price, as described in Section 6, SC 3.1 (Payment Bond) and SC 3.2 (Performance Bond), of this IFB.

Bidder Selection Timetable

Monday, July 23, 2012, 10 am.	Mandatory Pre-Bid Conference
Thursday, August 9, 2012	Deadline for requests for clarification or exception
Tuesday, August 21, 2012, 2:00 p.m.	**Closing date & time for receipt of bids & bid opening**
Wednesday, September 12, 2012	BATA Oversight Committee consideration of recommendation for award
Tuesday, September 18, 2012 (approx.)	Issuance of Notice of Award

General Conditions

BATA reserves the right to award a contract or to reject all bids.

A signed BATA Construction Agreement mailed or delivered to a particular bidder shall constitute a binding contract, which incorporates this IFB and its addenda, if any, and all documents referenced herein, any deviations from the specifications expressly accepted by BATA, and all terms and conditions of the Construction Agreement.

In accordance with California Public Contract Code Section 22300, Contractor may substitute securities for any money withheld under **Section 7.0 General Conditions**. At Contractors request and expense, securities equivalent to the amount withheld shall be deposited with BATA, or with a state or federally chartered bank as the escrow agent, who shall then pay such monies to Contractor. Upon satisfactory completion of the contract, the securities shall be returned to Contractor.

Authority to Commit BATA

The Executive Director of BATA will recommend the successful bidder to the BATA Oversight

Committee, which will commit BATA to the expenditure of funds in connection with this IFB.

Thank you for your participation.

Sincerely,

Steve Heminger
Executive Director

SH: SB

J:\CONTRACT\Procurements\Engineer&Architect\BATA\SFOBB Canopy Renovation Project\SFOBB FINAL 100 PERCENT SPECS_Final.docx

SECTION 2. FORWARD

2-1 Bay Area Toll Authority

There are seven state-owned toll bridges (Antioch, Benicia-Martinez, Carquinez, Richmond-San Rafael, Dumbarton, San Mateo Hayward and the San Francisco-Oakland Bay Bridge) that are owned and operated by the California Department of Transportation (Caltrans) in the San Francisco Bay Area. State-owned toll bridge operations and capital improvement projects are funded by toll revenues, which are administered by the Bay Area Toll Authority (BATA).

2-2 General Description of Work

The project will upgrade the San Francisco-Oakland Bay Bridge Toll Plaza by recladding the canopy structure, replacing the crash cushions, remove existing pump station building, constructing a new pump station building over existing concrete slab, Stairway No. 7 removal, and painting the toll booths, concrete pillars, bus shelter, pump station building inside wall and floor, and steel clad columns. The new pump station building will be in the footprint of the existing building located in the median of I-80.

The project is an element of the overall project reconstructing the east span of the San Francisco-Oakland Bay Bridge. The architectural enhancement does not include any structural modification of the existing Toll Plaza Canopy. There is no change to Caltrans right-of-way and the existing freeway access control will remain unchanged under the proposed work. The project is fully funded by BATA.

One item of the work requires the use of scaffolding in a coordinated manner over continuous traffic. This item includes the removal of existing cladding and the installation of a new cladding system above the top of column height on all sides of the existing toll plaza canopy. The specification includes a traffic management plan (TMP) which describes the closures for traffic lanes. The Contractor shall submit the means and methods he intends to utilize to install the canopy cladding. These means and methods must provide adequate structural stability and safety for traffic and the general public. All canopy construction must include visual screening that obscures direct view of the construction activity including workers standing on the Toll Canopy roof. The Contractor's attention is directed to the two mandatory factors:

1. The Contractor must maintain two (2) temporary traffic lights at each lane while work proceeds over the said lane. These traffic lights must be functional from the appropriate toll booth and the control room in the administration building.
2. All access methods must provide a minimum of 15 ft. height clearance at each lane.

Four such means and methods of cladding installation are noted below but the Contractor is not limited to these methods. The Contractor may submit an alternative installation method for review and approval of the Engineer, provided the Contractor does so no less than fourteen (14) calendar days prior to bid opening:

1. Conventional Method: This method includes portable scaffolding that would be erected and dismantled at the end of each work shift. The Contractor is advised to

review the TMP for lane closure requirements. The maximum number of lane closures is 4 adjacent lanes, which includes work over 2 lanes, with a 1 lane buffer on each side of the canopy work area.

2. Temporary Falsework: This method includes the installation and removal of a temporary elevated work platform with provision subject to the Maintain Traffic of these Special Provisions and as directed by the Engineer. This falsework must conform to the Standard Specification.
3. Cantilever Scaffold Method: This method includes cantilever type scaffolding systems used in conventional bridge construction and maintenance. The scaffold may be supported from the superstructure of the Toll Plaza canopy, and must comply with allowable load limitations. The scaffolding may be set up on all sides of the canopy as dictated by the staging plans. Should the Contractor elect to use cantilever scaffolding system he must submit shop drawings structural load calculations, details of the scaffolding, and details of its structural support for review and approval by the Engineer.
4. Prefabricated method: This method may allow for the existing cladding to remain in place, with the exception of certain demolition for prefabricated panel structural connections. This allows the fabrication of panels to be either fabricated off-site or on-site in areas not over traffic lanes. This method would allow for panels of various widths to be hoisted and secured in place, subject to the maximum allowable width of 2 lanes, to which buffer dimensions of approximately one lane width must be added on each side, as approved by the Engineer. Lesser buffer dimensions must be approved by the Engineer. The panels should be constructed as shown on the plans and attached to a substructure that shall match the configuration of and be the equivalent to the 4 inch wide existing substructure of the existing canopy.

2-3 Description of the Contracting Process

The procedure that will be followed during the period between BATA's determination of the successful Bidder and its issuance of a Notice to Proceed consists of the steps listed and explained below:

1. Issuance of Notice of Award (NOA)
2. Signing of Construction Agreement by successful Bidder
3. Submittals of Performance Bond, Payment Bond and Insurance Certificate(s)
4. Execution of Contract by BATA
5. Issuance of Notice to Proceed

2-4 Notice of Award

After Bids are opened at the time and place stipulated, Bids will be reviewed by BATA. The contract will be awarded to the lowest responsive and responsible Bidder subject to the approval of the BATA Oversight Committee. BATA reserves the right to award a contract or to

reject any or all bids. No Bidder may withdraw its bid for the period of days stipulated on the Bid Form after the date set for the Bid Opening. The Bid shall be subject to acceptance by BATA during this period.

Promptly upon BATA's approval of the award of the Contract, BATA will issue a "Notice of Award" (NOA) letter to the successful Bidder. Included with the NOA will be two originals of **Construction Agreement** and one original of the following:

1. **Performance Bond** in the amount of 100% of the total amount of the Contract indicated in the total bid for Part "A" space on the Schedule of Quantities and Prices Form, Bid Form #1, to guarantee faithful performance of the work under the Contract, including the replacing of or making acceptable, any defective materials or faulty workmanship.
2. **Payment Bond** in the amount of 100% of the total amount of the Contract, to inure to the benefit of persons performing labor or furnishing materials in connection with the work of the proposed contract. This bond shall be maintained in full force and effect until all work under the contract is completed and accepted by BATA, and until all claims for materials and labor have been paid.

Within **six (6) calendar days** from the date of NOA, the successful Bidder shall return executed copies of these documents. Within this same period, Bidder shall furnish Certificates of Insurance as more fully described below.

Both the Performance Bond and the Payment Bond shall be issued by a surety company (ies) acceptable to BATA with a Best Guide Rating of A7 or better and authorized to execute such in the State of California.

Should any surety or sureties be deemed unsatisfactory at any time by BATA, notice will be given Contractor to that effect, and Contractor shall forthwith substitute a new surety or sureties satisfactory to BATA, at Contractor's expense.

All alterations, time extensions, extra work, additional work or any other changes authorized in the Contract, may be made without notice to, or securing the prior consent of, the surety or sureties on the Performance or Payment Bonds.

2-5 Certificates of Insurance

Bidder shall furnish original certificates showing evidence that the insurance coverages specified in the Special Conditions herein have been obtained and are in force. All certificates shall provide that not less than sixty (60) calendar days written notice shall be given to BATA and any additional insureds in the event of cancellation, non-renewal or material change in the polic**Forfeiture of Bid Security**

Failure of the Bidder to whom the Notice of Award was issued to sign the Construction Agreement and submit all of the documents required within **six (6) calendar days** shall be just cause for the annulment of the award and forfeiture of Bidder's security.

2-6 Return of Bid Security

If the Bid is not accepted by BATA within one hundred twenty (120) days after the date set for Bid Opening, or if the Bidder to whom the Contract is awarded executes and delivers to BATA the required documents, then the Bidder's Bond, cash, or the amount of the certified or cashier's check shall be returned to all bidders.

2-7 Executed Contract

After Contractor's delivery of two (2) signed original Construction Agreements and all required submissions as stipulated above, BATA will sign the Construction Agreement. No agreement between BATA and Contractor shall be in effect until BATA executes the Construction Agreement.

2-8 Notice to Proceed

BATA will issue a Notice to Proceed promptly following execution of the Construction Agreement. Contractor shall commence performance of work after receipt of the Notice to Proceed, and shall continuously and diligently prosecute the work to completion on or before the time or times set forth in Section 6, **Special Conditions.** Unless otherwise specified in the Notice to Proceed (NTP), the first day charged shall be the **sixth calendar day** following the date of the Notice of Award. Contractor shall not enter upon nor occupy State property or commence any materials fabrication prior to receiving the Notice to Proceed. Any work performed or expenses incurred by Contractor prior to Contractor's receipt of Notice to Proceed shall be entirely at Contractor's risk.

SECTION 3. INSTRUCTIONS TO BIDDERS

1. Scope of Work

In summary, project will upgrade the San Francisco-Oakland Bay Bridge Toll Plaza by recladding the canopy structure, replacing the crash cushions, remove existing pump station building, constructing a new pump station building over existing concrete slab, Stairway No. 7 removal and painting the toll booths, concrete pillars, bus shelter, pump station building inside wall and floor, and steel clad columns. The new pump station building will be in the footprint of the existing building which is located in the median of I-80.

2. Mandatory Pre-Bid Conference

A mandatory pre-bid conference will be held at the time and place set out in Section 1, **Invitation for Bid (IFB)**. The purpose of this meeting is to inform prospective Bidders and potential subcontractors of subcontracting and material supply opportunities and to receive comments and questions regarding the work and the Contract Documents from attendees.

3. Examination of the Contract Documents

Each prospective Bidder shall carefully examine the Contract Documents and become thoroughly familiar with the terms and conditions contained therein prior to the Bid Opening date. The bid submitted shall include a sum to cover the cost of all items necessary to perform the work as set forth in the Contract Documents. No allowance of any kind will be made to any Bidder because of lack of such examination or knowledge. The submittal of a bid shall be conclusive evidence that the Bidder has made such an examination.

3.1 Definitions

"Definitions and Terms," of the Standard Specifications and Contract Documents. Whenever in the Standard Specifications, Standard Plans and these contract documents the following terms are used, unless the context otherwise requires, the intent and meaning shall be interpreted as follows:

Acceptance: The formal written acceptance by BATA of an entire contract that has been completed in all respects in accordance with the plans and specifications and any modifications thereof previously approved.

Base: A layer of specified material of planned thickness placed immediately below the pavement or surfacing.

Basement Material: The material in excavation or embankments underlying the lowest layer of subbase, base, pavement, surfacing or other specified layer which is to be placed.

BATA: The Bay Area Toll Authority.

Bidder: Any individual, firm, partnership, corporation, or combination thereof, submitting a bid for the work contemplated, acting directly or through a duly authorized representative.

Bridge: Any structure, with a bridge number, which carries a utility facility, or railroad, highway, pedestrian or other traffic, over a watercourse or over or under or around any obstruction.

Calendar Days: A calendar day shall be any day including all legal holidays, Saturday and Sunday.

Caltrans: California Department of Transportation

Conduit: A pipe or tube in which smaller pipes, tubes or electrical conductors are inserted or are to be inserted.

Contract: The written agreement covering the performance of the work and the furnishing of labor, materials, tools and equipment in the construction of the work. The contract shall incorporate this IFB, and its addenda, if any, all documents referenced herein, any deviations from the specifications expressed and accepted by BATA, and shall include the notice to Contractors, proposal, plans, special conditions, general conditions, applicable Caltrans Standard plans and Specifications, and contract bonds; also any and all supplemental agreements amending or extending the work contemplated and which may be required to complete the work in a substantial and acceptable manner. Supplemental Agreements are written agreements covering alterations, amendments or extensions to the contract and include contract change orders.

Contractor: The person or persons, firm, partnership, corporation, or combination thereof, private or municipal, who have entered into a contract with the Bay Area Toll Authority.

Days: Unless otherwise designated, days as used in the specifications will be understood to mean calendar days.

Department: California Department of Transportation, unless with respect to the Standard Plans and Standard Specifications the context requires that Department mean Bay Area Toll Authority (BATA).

Departments or Officers: Wherever departments or officers are referred to herein, Department staff are meant for the purpose of these Contract Documents, unless with respect to the Standard Plans and Standard Specifications the context requires that Department means BATA.

Detour: A temporary route for traffic around a closed portion of a road.

Director or Director of Transportation: The Director of Congestion Management and Highway Programs or his/her duly authorized representatives.

Divided Highway: A highway with separated traveled ways for traffic, generally in opposite directions.

Engineer: The Resident Engineer.

Federal Agencies: Whenever, in the specifications, reference is made to any Federal agency or officer, the reference shall be deemed made to any agency or officer succeeding in accordance with law to the powers, duties, jurisdiction and authority of the agency or officer mentioned.

Fixed Costs: Any necessary labor, material and equipment costs directly expended on the item or items under consideration that remain constant regardless of the quantity of the work done.

Frontage Road: A local street or road auxiliary to and located generally on the side of an arterial highway for service to abutting property and adjacent areas and for control of access.

Grading Plane: The surface of the basement material upon which the lowest layer of subbase, base, pavement, surfacing or other specified layer is placed.

Highway: The whole right of way or area that is reserved for and secured for use in constructing the roadway and its appurtenances.

Laboratory: The established Laboratory authorized by the Engineer to test materials and work involved in the contract.

Legal Holidays: Those days designated as State holidays in the Government Code.

Liquidated Damages: The amount prescribed in the contract documents, to be paid to BATA or to be deducted from any payments due or to become due the Contractor for each day's delay in completing the whole or any specified portion of the work beyond the time allowed in the contract documents.

Manual of Traffic Controls: The Caltrans Department of Transportation publication entitled "MANUAL OF TRAFFIC CONTROLS for Construction and Maintenance Work Zones." This manual may be obtained from Caltrans Publications.

Median: That portion of a divided highway separating the traveled ways for traffic in opposite directions including inside shoulders.

Notice of Award (NOA): Written notification issued by BATA awarding the contract.

Notice To Proceed (NTP): Notification to the Contractor to commence construction.

Oversight Engineer: The assigned representative of the California Department of Transportation that is duly authorized to oversee work covered by these specifications. The Oversight Engineer will have authority to stop work at any time there is a risk to public safety or when the work appears to be performed in an unsafe manner.

Owner Furnished Materials: Bay Area Toll Authority furnished materials.

Pavement: The uppermost layer of material placed on the traveled way or shoulders. This term is used interchangeably with surfacing.

Plans: The official project plans, Standard Plans, profiles, typical cross sections, working drawings and supplemental drawings, or reproductions thereof, which show the location, character, dimensions and details of the work to be performed. These documents are to be considered as a part of the plans.

Processing: Any operation or operations of whatever nature and extent required to produce a specified material.

Resident Engineer: Authorized representative for BATA, also, identified as the Engineer.

Resident Inspector: Resident Engineer or his authorized representative.

Roadbed: The roadbed is that area between the intersection of the upper surface of the roadway and the side slopes or curb lines. The roadbed rises in elevation as each increment or layer of sub-base, base, surfacing or pavement is placed. Where the medians are so wide as to include areas of undisturbed land, a divided highway is considered as including 2 separate roadbeds.

Roadway: That portion of the highway included between the outside lines of sidewalks, or curbs, slopes, ditches, channels, waterways, and including all the appertaining structures, and other features necessary for proper drainage and protection.

Shoulders: The portion of the roadway contiguous with the traveled way for accommodation of stopped vehicles, for emergency use, and for lateral support of base and surface courses.

Special Provisions: The Special Provisions are specific clauses setting forth conditions or requirements peculiar to the work. References to these can include BATA Special Conditions, General Conditions.

Specifications: The directions, provisions and requirements contained in these Contract documents.

Standard Plans: The Standard Plans of the State of California Department of Transportation.

Standard Specifications: The Standard Specifications of the State of California, Department of Transportation.

State: State of California**,** unless with respect to the Standard Plans and Standard Specifications the context requires that Department mean Bay Area Toll Authority (BATA).

State Contract Act: The applicable portions of the Public Contract Code. The provisions of this act and other applicable laws form and constitute a part of the provisions of this contract to the same extent as if set forth herein in full.

Subbase: A layer of specified material of planned thickness between a base and the basement material.

Subgrade: That portion of the roadbed on which pavement, surfacing, base, subbase, or a layer of any other material is placed.

Substantial Completion: Beneficial occupancy of the Canopy project and issuance of the notice of relief of maintenance both statement issued from the Resident Engineer .

Substructure: All that part of the bridge or canopy below the bridge seats, tops of piers, haunches of rigid frames, or below the spring lines of arches. Backwalls and parapets of abutments and wingwalls of bridges shall be considered as parts of the substructure.

Superstructure: All that part of the bridge or canopy except the bridge substructure.

Surfacing: The uppermost layer of material placed on the traveled way, or shoulders. This term is used interchangeably with pavement.

Traffic Lane: That portion of a traveled way for the movement of a single line of vehicles.

Traveled Way: That portion of the roadway for the movement of vehicles, exclusive of shoulders.

Work: All the work specified, indicated, shown or contemplated in the contract to construct the Improvement, including all alterations, amendments or extensions thereto made by contract change order or other written orders of the Engineer.

Working Days: Same as calendar days.

3.2 Abbreviations

Each abbreviation signifies the following:

Abbreviation	Term
AAN	American Association of Nurserymen.
AASHTO	American Association of State Highway and Transportation Officials.
AISC	American Institute of Steel Construction.
AISI	American Iron and Steel Institute.
ANSI	American National Standards Institute.
APHA	American Public Health Association.
API	American Petroleum Institute.
AREA	American Railway Engineering Association.
ASME	American Society of Mechanical Engineers.
ASTM	American Society for Testing and Materials.
AWG	American Wire Gage.
AWPA	American Wood-Preservers' Association.
AWS	American Welding Society.
AWWA	American Water Works Association.
CEC	California Electrical Code
EIA	Electronic Industries Association.
IEEE	Institute of Electrical and Electronics Engineers.
NEC	National Electric Code
NECA	Standards for Construction
NESC	National Electrical Safety Code
NEMA	National Electrical Manufacturers Association.
UL	Underwriters' Laboratories Inc.

3.3 Units of Measurement

Some of the symbols for units of measurement used in the specifications and in the Summary of Quantities and Prices are defined as follows. The symbols for other units of measurement used in the specifications are as defined in American Society for Testing and Materials (ASTM) Designation: E-380, or in the various specifications and test referenced in the specifications

Symbols as used in the Specifications	Symbols as used in the Engineer's Estimate	Definitions
A	—	amperes
	ACRE	acre
	CF	cubic foot
	CY	cubic yard
—	EA	each
g	—	gram
ksi	—	kips per square inch
	GAL	gallon
h	H	hour
	LB	pound
—	LS	lump sum
	LF	linear foot
	LNMI	lane mile
	MFBM	thousand foot board measure
	MI	mile
	MSYD	thousand station yard
Ω	—	ohm
pcf	—	pounds per cubic foot
s	—	second
	STA	100 feet
	SQFT	square foot
	SQYD	square yard
	TAB	tablet
ton	TON	2,000 pounds
W	—	watt
V	—	volt

4. Examination of Site and Existing Conditions

In addition to examination of the Contract Documents, each prospective Bidder shall, prior to the Bid Submission, request a site visit and become fully informed regarding all existing and expected site conditions that might in any way affect the cost or the time of performance of the work. Any failure of the prospective Bidder to fully investigate the site and inform itself of existing and anticipated site conditions shall not relieve such Bidder from responsibility for estimating properly the cost or difficulty of performing the work.

Prospective bidders shall make arrangements to visit the project sites by contacting the BATA Project Manager.

5. Addenda to Contract Documents

BATA reserves the right to make changes in the Contract Documents as it may deem appropriate up to the time set for opening of bids. Any and all changes in the Contract Documents shall be made by written Addendum, which shall be issued by BATA at http://www.procurements.mtc.ca.gov. All potential bidders are responsible for checking the BATA website for any addenda to the bid document.

If such Addenda require changes in quantities or might affect the prices bid, or both, the date set for opening of bids may be postponed by such number of days as in the opinion of BATA shall enable Bidders to revise their bids.

Failure to acknowledge receipt of all Addenda may cause the bid to be considered non-responsive to the Contract Documents. Bidder certifies that the Contract Documents and Addenda thereto have been thoroughly read and that there are no misunderstandings as to the meaning, purpose or intent of any provision in the Contract Documents as modified by those Addenda.

6. Prevailing Wage Rates

Pursuant to appropriate Sections of the Labor Code of the State of California, the Director of the California Department of Industrial Relations has ascertained the general prevailing rate of wages (which rate includes employer payments for health and welfare, vacation, pension, and similar purposes) applicable to the work to be performed under this Contract, for straight time, overtime, Saturday, Sunday and holiday work.

Workmen employed in the work must be paid at the rates at least equal to the prevailing wage. If Contractor uses a craft or classification not shown on the prevailing wage determinations, Contractor may be required to pay the wage rate of that craft or classification most closely related to it as shown in the general determinations effective at the time of Contract award.

In the performance of the work specified in this Contract, the Prime Contractor and all subcontractors shall be responsible for compliance with California Labor Code Sections 1776 (Payroll records, retention, inspection, noncompliance penalties, rules and regulations) and

1777.5 (Employment of registered apprentices, wages, standards, number, apprenticeable craft or trade, exemptions, contributions).

7. Preparation and Submittal of Bid

The Bidder shall prepare its bid in strict accordance with all of the requirements of the Contract Documents and any addenda thereto. In order to receive consideration, all bids shall comply with the following instructions:

7.1

Bids shall be submitted on the forms provided in these Contract Documents in signed original. Bids submitted in any other form may be considered non-responsive and rejected.

7.2

Blank spaces in each bid form shall be properly filled in, and the phraseology thereof shall not be changed. Any conditions or limitations made to the items mentioned therein may be cause for rejection. Alterations by erasure or interlineation must be explained or noted in the bid over the signature of the Bidder.

7.3

No telegraphic or FAX bid or telegraphic or FAX modification of a bid will be considered. No bids received after the time fixed for receiving them will be considered. Late bids will be returned to the Bidder unopened.

7.4

All bids shall be enclosed in a sealed envelope bearing the Contract Number, the title of the project, the date and hour of the opening, and the name of the Bidder. Bids shall be addressed to the Project Manager, Bay Area Toll Authority, and shall be delivered to BATA Office at Joseph P. Bort MetroCenter, 101 Eighth Street, Oakland, CA 94607-4700 no later than the time scheduled for Bid Opening. It is the sole responsibility of the Bidder to see that its bid is received in a timely manner.

7.5

Bids for Part A shall include all labor, material (permanent and temporary), tools, equipment, and subcontractors doing all the work complete in place in accordance with the requirements of the Contract. Labor shall only include the status of field foreman and other field laborers who are included on the monthly certified payroll statement. Tools shall include small tools and supplies. Equipment shall include equipment operating expense. Bid prices for part A shall include any and all profits, applicable taxes, freight charges and other applicable fees of any kind including fringe benefits and statutory taxes, indirect and overhead costs, including but not limited to labor, not included in the monthly certified payroll. This shall also include the Contractor's home office expenses allocable to the project.

Bids for Part B shall include the number of contract days the Contractor bases the bid upon and is herein referred to as the basis of the number of contract days. The time duration associated with the removal of existing pump station building and the construction of the pump station building and pump station electrical shall be in addition to the Part B number of calendar days bid by the Contractor. The number of contract days shall be in calendar days. The basis of the number of contract days shall be solely based upon the Contractor's experience, expertise and planning to complete the project within the stated calendar days. The Contractor's bid on the number of contract days shall become the basis for determining the contract duration from the notice to proceed to substantial completion. The Contractor shall anticipate weather delays in the calculation of the basis of number of contract days as noted in section **23.4.2 Baseline CPM Schedule. No compensation will be granted for the Contractor's failure to include schedule or other contractual requirement of these specifications when calculating the basis of the number of contract days.**

The contract days shall be the sum of Part B and the number of days required to remove existing pump station building and to construct the pump station building and pump station electrical not to exceed 285 calendar days.

The Contractor shall calculate the Part B by multiplying the number of contract days by the cost per day to arrive at the total cost for the Part B.

The bid value shall be the sum of Part A bid items of work. Part B amount will not be paid to the Contractor.

The total "Bid for Comparison" shall be the sum of Part A and Part B. The total amount stated in the Total "Bid for Comparison" shown on Schedule of Quantities and Prices of the contract bid form is used only at bid opening to compare the bids and determine the lowest bid. The contract bonds and the contract are based on the "bid amount shown in PART A".

7.6

The quantities given in the Schedule of Quantities and Prices of the contract bid form for which unit prices are asked to be bid are approximate only, being given as a basis for the comparison of bids, and BATA does not, expressly or by implication, represent that the actual quantities required will correspond therewith, but reserves the right to increase or decrease the quantity of any class or portion of the work, or to omit portions of the work, as BATA may deem necessary or advisable.

7.7

The Bidder shall show the Contract number and title on its bid and on all correspondence

7.8

Wherever in this Bid an amount is stated in both words and figures, in case of discrepancy between words and figures the words shall prevail. If all or any portion of the Bid is required to be given in unit prices and totals and a discrepancy exists between any such unit prices and totals so given, the unit prices shall prevail. If the Bid contains an arithmetic error in the computation of unit price extensions or in the summation of Bid item totals, BATA will correct and revise the Total Contract Bid for Comparison accordingly. BATA will not make any changes on the total shown for "lump sum" items.

7.9

The successful Bidder shall sign and file with BATA the following certification prior to performing the work of the contract: *"I am aware of the provisions of Section 3700 of the Labor Code which require every employer to be insured against liability for workers' compensation or to undertake self-insurance in accordance with the provisions of that code, and I will comply with such provisions before commencing the performance of the work of this contract."*

8. Bid Security

Each bid shall be accompanied by a certified or cashier's check, cash, or a Bidder's bond in the sum of not less than **10%** of the Total Contract Price and said checks or bond shall be made payable to the order of the Bay Area Toll Authority. In case the successful Bidder fails to file satisfactory bonds or provide the insurance required by the Contract Documents, or refuses to enter into a Contract within the specified time, it shall forfeit its bid security. If the bid is not accepted by BATA within one hundred twenty (**120) calendar days** after the date set for the opening of bids, or if the Bidder to whom the contract is awarded executes and delivers to BATA the required Contract Forms, then the amount of the cash or the certified or cashier's check shall be returned to the Bidder.

9. Opening of Bids

Bids will be opened and publicly read aloud by BATA at the time and place stated in Section 1, **Invitation to Bid**.

10. Withdrawal of Bid

Any Bidder may withdraw its bid, either personally or by a written request by a duly authorized representative, at any time prior to the scheduled time for opening of bids. However, no Bidder may withdraw its bid for a period of **one hundred twenty (120) calendar days** after the Bid Opening. Bidder's attention is directed to the provisions of the Public Contract Code Sections 5100 to 5108 regarding relief of bidders.

11. Conditional Bids

Conditional bids, or those which take exception to the Contract Documents, will be considered non-responsive and will be rejected.

12. Single Bid Response

If only one bid is received in response to the Invitation to Bid, a detailed cost proposal may be required of the single Bidder. A cost/price analysis and evaluation and/or audit will be performed of the cost proposal in order to determine if the price is fair and reasonable.

13. Award or Rejection of Bids

The award of the contract to the successful Bidder will be made within one hundred twenty (**120) calendar days** after the opening of bids. If the first Bidder selected as a successful Bidder refuses or fails to execute the contract, BATA may award the contract to the second successful Bidder selected as provided herein and such an award, if made, will be made within one hundred twenty **(120) calendar days** after the opening of the bid proposals. If the second successful Bidder refuses or fails to execute the contract, BATA may award the contract to the third successful Bidder selected as above provided and such an award, if made, will be made within one hundred twenty **(120) calendar days** after opening of the bid proposals. The periods of time specified above within which the award of contract may be made shall be subject to an extension for such further period as may be agreed upon in writing between BATA and the Bidder concerned. BATA reserves the right to reject any or all bids and to waive any informality in the bids or in the bid process. Obvious cases of bid unbalancing may be cause for rejection.

BATA is in the process of obtaining an Encroachment Permit from Caltrans. If after receipt of the bids for the project, an Encroachment Permit has not been obtained, BATA reserves the right to reject all bids and re-advertise the project or extend the award period as agreed in writing between BATA and the Bidder.

14. Basis of Award

The criteria for determining the successful Bidder will include the Bidder's responsiveness to the requirements of the Contract Documents, Bidder's responsibility and price. Any Bidder may be required to furnish evidence satisfactory to BATA that it and its proposed subcontractors have sufficient means and experience in the type of work called for in the Contract Documents to assure completion of the Contract in a satisfactory manner. Award, if made, will be to the lowest responsible and responsive Bidder, based on the cost+time basis, which is based on the sum of the item totals for Work 1 and Work 2 as discussed in SC-5, Beginning of Work, Time of Completion, and Liquidated Damages, and the total bid for time to complete Designated Portion of Work 1, as discussed in the same Section.

Do not bid more than **285 calendar days** for Designated Portion of Work 1. Bids received with contract days longer than 285 calendar days will be non-responsive and therefore it shall be the ground for rejection of the bid.

Attention is directed to Section SC-5, "Beginning of Work, Time of Completion, and Liquidated Damages" of these Special Provisions.

15. Protest Procedures

The following procedures shall be used by Bidders seeking review of the Contract Documents or the Contract process:

15.1 General

Bidder protests shall be addressed to the Bay Area Toll Authority, Attention: Stephen Baker, and clearly marked "Bid Protest" on the outside of the envelope.

15.2 Protest of Specifications

Prospective bidders may submit written protest of items in the Contract Documents on the grounds that the specifications are biased, unduly restrictive, discourage competition, or do not comply with state or local law or regulation no later than seven (7) calendar days prior to the date bids are due. Such protests will be reviewed by BATA and responded to prior to bid opening. If appropriate, the time of bid opening will be extended to accommodate any changes in the IFB.

15.3 Selection Disputes

A bidder may protest the selection of a Contractor on the grounds that BATA procedures, or applicable provisions of state or local law, have been violated or inaccurately and/or inappropriately applied by BATA by submitting to the Project Manager a written explanation of the basis for protest no later than three (3) working days after the date BATA Oversight Committee approves the award or the date the bidder is notified that it was not selected, whichever is later, for objection to Contractor selection.

Protests of recommended awards must clearly and specifically describe the basis for the protest in sufficient detail for the BATA review officer to recommend a resolution to the BATA Executive Director.

The BATA Executive Director will respond to the protest in writing, based on the recommendation of a staff review officer.

Authorization to award a contract to a particular Contractor by BATA's Oversight Committee shall be deemed conditional until the expiration of the protest period or, if a protest is filed, the issuance of a written response to the protest of the Executive Director or the decision of the BATA Oversight Committee, if applicable, whichever is later.

Should the protesting proposer wish to appeal the decision of the Executive Director, it may file a written appeal with the BATA Oversight Committee, no later than three (3) working days after receipt of the written response from the Executive Director. The BATA Oversight Committee's decision will be the final agency decision.

16. Public Records

This IFB and any material submitted by a bidder in response to this IFB are subject to public inspection under the California Public Records Act (Government Code Section 6250 *et seq*.), unless exempt by law.

SECTION 4. CONTRACT FORMS

1. **Construction Agreement ***
2. **Performance Bond ***
3. **Payment Bond ***
4. **Sample Insurance Certificate**
5. **Alternate IRS Form W-9**

*** Form must be acknowledged by a Notary**

Return ALL Contract Forms To:

Stephen Baker

Joseph P. Bort MetroCenter
101 Eighth Street
Oakland, California 94607-4700
Direct Phone: (510) 817-5892
Main Phone: (510 817-5700
Fax: (510) 817-5848

PLEASE NOTE:

It is not necessary to complete these forms to bid on this project. But the Bidder who is awarded the Contract will be required to execute all Contract Forms.

CONTRACT FORM #1

CONTRACT NO. BATA-011

SFOBB TOLL PLAZA IMPROVEMENTS

CONSTRUCTION AGREEMENT

This Agreement is entered into between the Bay Area Toll Authority ("BATA") and _____("Contractor") as of the date set out below.

BATA and Contractor agree as follows:

1. Scope of Work

Contractor shall provide all labor, materials, tools, equipment and incidentals necessary to perform the work described as in a satisfactory and workmanlike manner and in accordance with the provisions of the Contract Documents.

2. Compensation

Full compensation to Contractor for the complete and satisfactory performance of the work under this Agreement, in strict compliance with all of the provisions of the Contract Documents, and for Contractor's payment of all obligations incurred or applicable to performance of the work, shall be the price inserted in the bid for Part "A" Items shown in the Schedule of Quantities and Prices attached hereto as this amount may be adjusted in accordance with other provisions of the Agreement. Payment of this compensation will be made by BATA to Contractor in accordance with the appropriate payment provisions of the Agreement.

3. Contract Documents – Order of Precedence

The following sections of the Contract Documents are incorporated by reference into this Construction Agreement:

Order of Precedence (Highest in order listed first)

Section 1.0 through 4.0	Contract Forms and Agreement
Section 5.0	Bid Forms
Section 6.0	Special Conditions
Section 7.0	General Conditions
Section 10	Contract Details
Section 12	Contract Details
Section 13	Contract Details
Appendix A	Contract Drawings and Plans
Caltrans Standard Plans	Dated May 2006
Caltrans Standard Specifications	Dated May 2006

These documents are essential parts of the agreement between the parties and are intended to be complementary and to describe and provide for a complete work. In the event of any discrepancy between any drawing and the dimensions written thereon, the dimensions shall

be taken as correct. Detail drawings shall prevail over general drawings. In the event of any other conflict among the documents, precedence shall be given in the order listed above.

4. Quality of Work

Where the plans or specifications describe portions of the work in general terms, but not in complete detail, it is understood that only the best general practice is to prevail and that only materials and workmanship of the first quality are to be provided.

5. Time of Performance

Contractor shall commence work under the Agreement immediately upon issuance by BATA of a Notice to Proceed and shall complete all of the work under the Agreement by the dates specified in **Section 6.0 Special Conditions**. The issuance of a Notice to Proceed is contingent upon Contractor's submittal of proper insurance certificates. The number of days specified in Part B of bid sheet plus the days required to construct pump station building and pump station building electrical shall be the basis of the time of performance for all work.

6. Entire Agreement

This Agreement constitutes the entire agreement between BATA and Contractor respecting the subject matter hereof. All other agreements, understandings and communications between the parties hereto are deemed to be merged into and superseded by the provisions of this Agreement. No modification or change to this Agreement shall have any force or effect unless it is in writing and expressly referred to as being a Change Order to this Agreement.

7. Responsible Conduct

Contractor shall at all times deal in good faith and truthfully with BATA. Contractor shall submit documentation to BATA, including reports, claims, requests for change orders, equitable adjustment, contract modifications or requests of any kind seeking increased compensation or decreases of an obligation on this contract only in good faith and upon an honest evaluation of the underlying circumstances and an honest calculation of any amount being sought. A violation of this standard of conduct will subject the Contractor to being deemed “non-responsible” and potentially ineligible for future contracts with BATA.

IN WITNESS WHEREOF two identical counterparts of this instrument, each of which shall for all purposes be deemed an original thereof, have been duly executed by BATA and Contractor respectively, on the dates set out below.

BAY AREA TOLL AUTHORITY	**CONTRACTOR**
Steve Heminger, Executive Director	Name, Title
Date	Date
	Contractors License No.
	Class/Expiration Date

CONTRACT FORM #2

PERFORMANCE BOND FOR PUBLIC WORKS

KNOW ALL PEOPLE BY THESE PRESENTS: That

WHEREAS, the Bay Area Toll Authority ("BATA") has awarded to

_____

("Principal") a contract described as:

CONTRACT NO. BATA-011

SFOBB TOLL PLAZA IMPROVEMENTS

and all of the Contract Documents attached to or forming a part of said Agreement are hereby referred to and made a part hereof; and

WHEREAS, said Principal is required under the terms of said contract to furnish a bond for the faithful performance of said contract,

NOW THEREFORE, we, the Principal and

_____

as Surety, are held and firmly bound unto the Bay Area Toll Authority (hereinafter called "BATA"), in the penal sum of **$** _____, lawful money of the United States, for the payment of which sum well and truly to be made, we bind ourselves, our heirs, executors, administrators and successors, jointly and severally, firmly by these presents.

The condition of this obligation is such that if the above-bound Principal, its heirs, executors, administrators, successors or assigns, shall in all things stand to and abide by, and well and truly keep and perform the covenants, conditions and agreements in the said contract and any alteration thereof made as therein provided, on their part, to be kept and performed at the time and in the manner therein specified, and in all respects according to their true intent and meaning, and shall indemnify and save harmless BATA, its officers, agents, and employees, as therein stipulated, then this obligation shall become null and void; otherwise it shall be and remain in full force and effect.

And the said Surety for value received, hereby stipulates and agrees that no change, extension of time, alteration or addition to the terms of the contract or to the work to be performed thereunder shall in any way affect its obligations on this bond, and it does hereby waive notice of any change, extension of time, alteration or additions to the terms of the contract.

In the event suit is brought upon this bond by BATA and judgment is recovered, Surety shall pay all costs incurred by BATA in such suit, including a reasonable attorney's fee to be fixed by the Court.

IN WITNESS WHEREOF this instrument has been duly executed by Principal and Surety on this

_____ day of _____, 2012.

PRINCIPAL:	**SURETY:**
_____ (Company)	_____ (Company)
_____ (Signature)	_____ (Signature)
_____ (Name – Please Print)	_____ (Name – Please print)
_____ (Title)	_____ (Title)

NOTE: Signatures of those executing for Surety must be acknowledged by a Notary.

NOTE TO SURETY COMPANY:

The following form of acknowledgement should be used. If any other form of acknowledgement is used, there must be submitted a certified copy of unrevoked resolution of authority for the attorney-in-fact.

SURETY COMPANY ATTORNEY-IN-FACT

State of California)

County of _____)

On _____, before me, the undersigned, a Notary Public in and for

the State, personally appeared_____, known
to me to be the duly authorized Attorney-in-Fact of the corporate Surety named in the within instrument, known to me to be authorized to execute that instrument on behalf of said corporation, known to me to be the person whose name is subscribed to such instrument as the Attorney-in-Fact of said corporation, and acknowledged to me that he (she) subscribed the name of said corporation thereto as Surety, and his (her) own name as Attorney-in-Fact and that said corporation executed the same.

WITNESS MY HAND AND OFFICIAL SEAL:

(SEAL)

_____
Notary Public for the State of California

Acknowledgement by Attorney-in-Fact must be attached.
Corporate seals of Principal and Surety must be attached.

CONTRACT FORM #3

PAYMENT BOND FOR PUBLIC WORKS

KNOW ALL PEOPLE BY THESE PRESENTS: That

WHEREAS, the Bay Area Toll Authority ("BATA") and

_____

("Principal") have entered into a Construction Agreement for the furnishing of all materials, labor, services and transportation necessary, convenient and proper to the performance of

CONTRACT NO. BATA-011
SFOBB TOLL PLAZA IMPROVEMENTS

and all of the Contract Documents attached to or forming a part of said Agreement are hereby referred to and made a part hereof; and

WHEREAS, said Principal is required by Chapter 5 (commencing at Section 3225) and Chapter 7 (commencing at Section 3247), Title 15, Part 4, Division 3 of the California Civil Code to furnish a bond in connection with said contract;

NOW THEREFORE, we, the Principal and

_____

as Surety, are held and firmly bound unto the Bay Area Toll Authority (hereinafter called "BATA") in the penal sum of **$** _____ in lawful money of the United States of America for the payment of which sum well and truly to be made, we bind ourselves, our heirs, executors, administrators, successors and assigns, jointly and severally, firmly by these presents.

THE CONDITION OF THIS OBLIGATION IS SUCH that if said Principal or its subcontractors, heirs, executors, administrators, successors, or assigns, shall fail to pay any of the persons named in Section 3181 of the California Civil Code, amounts due under the Unemployment Insurance Code with respect to work or labor performed by any such claimant, or for any amounts required to be deducted, withheld and paid over to the Employment Development Department from the wages of employees of the Contractor and Subcontractors pursuant to Section 13020 of the Unemployment Insurance Code with respect to the work and labor, the Surety will pay for the same, in an amount not exceeding the sum hereinabove specified, and also, in case suit is brought upon this bond, a reasonable attorney's fee to be fixed by the court.

This bond shall inure to the benefit of any of the persons named in Section 3181 of the California Civil Code, so as to give a right of action to such persons or their assigns in any suit brought upon this bond.

It is further stipulated and agreed that the Surety on this bond shall not be exonerated or released from the obligation of this bond by any change, extension of time for performance, addition, alteration or modification in, to, or any contract, plans, or agreement pertaining or relating to any scheme or work of improvement hereinabove described or pertaining to or relating to the furnishing of labor, materials, or equipment therefore, nor by any change or modification of any terms of payment or extension of the time for any payment pertaining or relating to any scheme or work of improvement hereinabove described, nor by any rescission or attempted rescission of the contract, agreement or bond, nor by any conditions precedent or subsequent in the bond attempting to limit the right of recovery of claimants otherwise entitled to recover under any such contract or agreement or under the bond, nor by any fraud practiced by any person other than the claimant seeking to recover on the bond and that this bond be construed most strongly against the Surety and in favor of all persons for whose benefit such bond is given, and under no circumstances shall Surety be released from liability to those for whose benefit such bond has been given, by reason of any breach of contract between BATA and original Contractor or on the part of any oblige named in such bond, but the sole conditions of recovery shall be that claimant is a person described in

Section 3110 or 3112 of the California Civil Code, and has not been paid the full amount of its claim and that Surety does hereby waive notice of any such change, extension of time, addition, alteration or modification herein mentioned.

IN WITNESS WHEREOF this instrument has been duly executed by Principal and Surety on this

_____ day of _____, 2012.

PRINCIPAL:	**SURETY:**
_____ (Company)	_____ (Company)
_____ (Signature)	_____ (Signature)
_____ (Name – Please Print)	_____ (Name – Please print)
_____ (Title)	_____ (Title)

NOTE TO SURETY COMPANY:

The following form of acknowledgement should be used. If any other form of acknowledgement is used, there must be submitted a certified copy of un-revoked resolution of authority for the attorney-in-fact.

SURETY COMPANY ATTORNEY-IN-FACT

State of California)

County of _____)

On _____, before me, the undersigned, a Notary Public in and for

the State, personally appeared_____, known to me to be the duly authorized Attorney-in-Fact of the corporate Surety named in the within instrument, known to me to be authorized to execute that instrument on behalf of said corporation, known to me to be the person whose name is subscribed to such instrument as the Attorney-in-Fact of said corporation, and acknowledged to me that he (she) subscribed the name of said corporation thereto as Surety, and his (her) own name as Attorney-in-Fact and that said corporation executed the same.

WITNESS MY HAND AND OFFICIAL SEAL:

(SEAL)

_____
Notary Public for the State of California

Acknowledgement by Attorney-in-Fact must be attached.
Corporate seals of Principal and Surety must be attached.

Certificate of Insurance

CONTRACT FORM #4

ACORD CERTIFICATE OF LIABILITY INSURANCE

OP ID LR BLANK-2

DATE (MM/DD/YYYY) 03/14/08

PRODUCER
Argo Insurance Brokers, Inc.
CA License #0660864
P. O. Box 232017
Pleasant Hill CA 94523-6017
Phone: 925-682-7001 Fax: 925-682-7024

THIS CERTIFICATE IS ISSUED AS A MATTER OF INFORMATION ONLY AND CONFERS NO RIGHTS UPON THE CERTIFICATE HOLDER. THIS CERTIFICATE DOES NOT AMEND, EXTEND OR ALTER THE COVERAGE AFFORDED BY THE POLICIES BELOW.

INSURED
SAMPLE CERTIFICATE
Name of the Insured
123 Main Street
Anytown CA ZIP

INSURERS AFFORDING COVERAGE		NAIC #
INSURER A:	Name of First Ins. Co.	
INSURER B:	Name of 2nd Ins. Co. (If any)	
INSURER C:	Name of 3rd Ins. Co. (If any)	
INSURER D:	Name of 4th Ins. Co. (If any)	
NSURER E:	Name of 5th Ins. Co. (If any)	

COVERAGES

THE POLICIES OF INSURANCE LISTED BELOW HAVE BEEN ISSUED TO THE INSURED NAMED ABOVE FOR THE POLICY PERIOD INDICATED. NOTWITHSTANDING ANY REQUIREMENT, TERM OR CONDITION OF ANY CONTRACT OR OTHER DOCUMENT WITH RESPECT TO WHICH THIS CERTIFICATE MAY BE ISSUED OR MAY PERTAIN, THE INSURANCE AFFORDED BY THE POLICIES DESCRIBED HEREIN IS SUBJECT TO ALL THE TERMS, EXCLUSIONS AND CONDITIONS OF SUCH POLICIES. AGGREGATE LIMITS SHOWN MAY HAVE BEEN REDUCED BY PAID CLAIMS.

INSR LTR	ADD'L INSRD	TYPE OF INSURANCE	POLICY NUMBER	POLICY EFFECTIVE DATE (MM/DD/YY)	POLICY EXPIRATION DATE (MM/DD/YY)	LIMITS	
A		GENERAL LIABILITY X COMMERCIAL GENERAL LIABILITY CLAIMS MADE X OCCUR GEN'L AGGREGATE LIMIT APPLIES PER: POLICY PRO-JECT LOC	1234435577	01/01/08	01/01/09	EACH OCCURRENCE	$ 1,000,000
						DAMAGE TO RENTED PREMISES (Ea occurence)	$
						MED EXP (Any one person)	$
						PERSONAL & ADV INJURY	$ 1,000,000
						GENERAL AGGREGATE	$ 2,000,000
						PRODUCTS - COMP/OP AGG	$ 1,000,000
B		AUTOMOBILE LIABILITY X ANY AUTO ALL OWNED AUTOS SCHEDULED AUTOS HIRED AUTOS NON-OWNED AUTOS	123456789	01/01/08	01/01/09	COMBINED SINGLE LIMIT (Ea accident)	$ 1,000,000
						BODILY INJURY (Per person)	$
						BODILY INJURY (Per accident)	$
						PROPERTY DAMAGE (Per accident)	$
		GARAGE LIABILITY ANY AUTO				AUTO ONLY - EA ACCIDENT	$
						OTHER THAN AUTO ONLY: EA ACC	$
						AGG	$
C		EXCESS/UMBRELLA LIABILITY X OCCUR CLAIMS MADE DEDUCTIBLE RETENTION $	1223344556	01/01/08	01/01/09	EACH OCCURRENCE	$ 10,000,000
						AGGREGATE	$ 10,000,000
							$
							$
							$
D		WORKERS COMPENSATION AND EMPLOYERS' LIABILITY ANY PROPRIETOR/PARTNER/EXECUTIVE OFFICER/MEMBER EXCLUDED? If yes, describe under SPECIAL PROVISIONS below	WE3456786543	01/01/08	01/01/09	X WC STATU-TORY LIMITS OTH-ER	
						E.L. EACH ACCIDENT	$ 1,000,000
						E.L. DISEASE - EA EMPLOYEE	$ 1,000,000
						E.L. DISEASE - POLICY LIMIT	$ 1,000,000
E		OTHER Professional E&O	W7654321765	01/01/08	01/01/09	Ea Claim	$1,000,000
						Ann'lAgg	$1,000,000

SAMPLE

DESCRIPTION OF OPERATIONS / LOCATIONS / VEHICLES / EXCLUSIONS ADDED BY ENDORSEMENT / SPECIAL PROVISIONS

Project Name: _____

MTC, SAFE, BATA, BART, ABAG and/or their commissioners, directors, officers, representatives, agents & employees are named as an Additional Insured. Insurance as evidenced by this certificate shall be considered Primary Insurance. Workers' Compensation Waiver of Subrogation included.

CERTIFICATE HOLDER

METR101

Metropolitan Transportation
Commission (BATA)
101 Eighth Street
Oakland CA 94607-4700

CANCELLATION

SHOULD ANY OF THE ABOVE DESCRIBED POLICIES BE CANCELLED BEFORE THE EXPIRATION DATE THEREOF, THE ISSUING INSURER WILL ENDEAVOR TO MAIL 30 DAYS WRITTEN NOTICE TO THE CERTIFICATE HOLDER NAMED TO THE LEFT, BUT FAILURE TO DO SO SHALL IMPOSE NO OBLIGATION OR LIABILITY OF ANY KIND UPON THE INSURER, ITS AGENTS OR REPRESENTATIVES.

AUTHORIZED REPRESENTATIVE

ACORD 25 (2001/08)

© ACORD CORPORATION 1988

IMPORTANT

If the certificate holder is an ADDITIONAL INSURED, the policy(ies) must be endorsed. A statement on this certificate does not confer rights to the certificate holder in lieu of such endorsement(s).

If SUBROGATION IS WAIVED, subject to the terms and conditions of the policy, certain policies may require an endorsement. A statement on this certificate does not confer rights to the certificate holder in lieu of such endorsement(s).

DISCLAIMER

The Certificate of Insurance on the reverse side of this form does not constitute a contract between the issuing insurer(s), authorized representative or producer, and the certificate holder, nor does it affirmatively or negatively amend, extend or alter the coverage afforded by the policies listed thereon.

ACORD 25 (2001/08)

BATA
BAY AREA TOLL AUTHORITY
TEMPLATE ENDORSEMENTS
(Refer to actual Contract)

Check applicable insurance policies:

____ Commercial General Liability Coverage Including Products and Completed Operations

In consideration of an additional premium paid by Named Insured it is hereby understood and agreed that the following applies:

ADDITIONAL INSURED ENDORSEMENT
to include coverage for Products and Completed Operations using endorsement form CG 2010 11/85 or comparable wording
(Actual hardcopy required)

Check if applicable ____
MTC, MTC SAFE, RAFC, BART, ABAG and/or their commissioners, directors, officers, representatives, agents and employees are named as Additional Insured.

PRIMARY COVERAGE

Check if applicable ____
With respect to claims arising out of the operations of the Named Insured, such insurance as afforded by this policy is primary and is not additional to or contributing with any other insurance carried by or for the benefit of the above Additional Insureds.

WORKERS COMPENSATION WAIVER OF SUBROGATION

Check if applicable ____
Waiver of Our Right to Recover From Others Endorsement – California.

NOTICE OF CANCELLATION

Check if applicable ___
It is understood and agreed that in the event of cancellation of the policy for any reason other than non-payment of premium, 30 days written notice will be sent to the certificate holder by mail. In the event the policy is called for non-payment of premium, 10 days written notice will be sent to the above.

Policy No.(s): _____ Policy Term: _____

Insurance Company: _____Insured: _____

Authorized Representative: _____Issue Date:_____

Contract Form #5

ALTERNATE TO FORM W-9

Bay Area Toll Authority
Payer's Request for Taxpayer Identification Number and Certification

Name as shown on account *(If joint account, must list and circle the name of the person or entity whose number you enter in part 1 below.)*

Business Name_____

Address_____

City, State, and ZIP code_____

List account number(s) here_____

PART 1 Taxpayer Identification Number --- For All Accounts

Enter your taxpayer Identification number in the appropriate box. For most individuals, this is your social security number.

Social Security Number		Employer Identification Number
| |	**or**	| |

PART 2 For Payees Exempt From Backup Withholding (See Instructions on IRS form W-9)

PART 3 Certification

Under penalty of perjury, I certify that:

(1) The Number shown on this form is my correct Taxpayer Identification Number (or I am waiting for a number to be issued to me), and

(2) I am not subject to backup withholding either because I have not been notified by the Internal Revenue Service (IRS) that I am subject to backup withholding as a result of a failure to report all interest or dividends, or the IRS has notified me that I am no longer subject to backup withholding.

CERTIFICATION INSTRUCTIONS – You must cross out item (2) above if you have been notified by IRS that you are subject to backup withholding because of underreporting interest or dividends on your tax return. However, if after being notified by IRS that you were subject to backup withholding you received another notification from IRS that you are no longer subject to backup withholding, do not cross out item (2).

Please Sign	Signature →	Date

Please check one box in each section below that best describes your type of organization and the transaction for which we make payment to you.

ORGANIZATION:		**TRANSACTION:**
☐ Individual	☐ Corporation	☐ Rents (Space & Machine)
☐ Two or more Indiv. (Joint)	☐ Real Estate Agent	☐ Medical & Health Care Service
☐ Sole Proprietorship	☐ Tax-Exempt Organization	☐ Other Services (Specify)
☐ Partnership	☐ Public Entity	☐ Interest
☐ Trust /Estate	☐ Other Organization (Specify)	☐ Goods/Merchandise

☐ Freight

☐ Other Transaction (Specify)

SECTION 5. BID FORMS

1. **Bid Form, Schedule of Quantities and Prices, Contractor Information**
2. **Bidder's Bond ***
3. **Designation of Subcontractors – Fair Practices Act**
4. **Affidavit of Non-Collusion ****
5. **Certification Regarding Iran Contracting Act of 2010**
6. **Contractors Reference Form**

*** Form must be acknowledged by a Notary**
****Form must be subscribed and sworn to before Notary Public or other Officer**

PLEASE NOTE:

These forms are designed to contain essential information concerning the Bidder and the bid, and must be completed such that they can be read. If any of the completed forms are illegible, BATA may, at its option, declare the entire bid unresponsive.

BID FORM #1

BID FORM

CONTRACT NO. BATA-011

SFOBB TOLL PLAZA IMPROVEMENTS

FROM: BIDDER'S NAME_____

TO: THE BAY AREA TOLL AUTHORITY,

In compliance with the **Invitation to Bid** for this project, the undersigned Bidder, being thoroughly familiar with the terms and conditions of the Contract Documents, hereby proposes and agrees fully to perform the work within the time stated and in strict accordance with the Contract Documents.

The Bidder hereby acknowledges receipt of the following Addenda to the Contract Documents:

Addendum No. _____ Dated _____

Addendum No. _____ Dated _____

Addendum No. _____ Dated _____

Addendum No. _____ Dated _____

Addendum No. _____ Dated _____

Addendum No. _____ Dated _____

Bidder hereby incorporates by reference all provisions of the Contract Documents that follow this Bid Form.

SCHEDULE OF QUANTITIES AND PRICES
CONTRACT NO. BATA-011
EA No. 4G2801 & 4G2901
SFOBB TOLL PLAZA IMPROVEMENTS

The prices quoted below include all applicable taxes, fees, permits, delivery and other charges as required.

Item No.		Item Description	Unit of Measure	Estimated Quantity	Unit Price	Item Total
1		Mobilization	LS	1		
2		Construction Site Management	LS	1		
3		Traffic Management Plan	LS	1		
4		Traffic Control System	LS	1		
5		Construction Area Signs	LS	1		
6		Portable Changeable Message Sign	EA	12		
7		Temporary Fence	LF	1,044		
8		Remove Concrete	CY	11		
9		Crash Cushion – Quadguard (6 Bay)	EA	20		
10		Structure Backfill (Retaining Wall)	CY	5		
11		Toll Plaza Canopy Recladding	LS	1		
12		Toll Plaza - Lighting	LS	1		
13		Paint Toll Plaza Booths	LS	1		
14		Pump Station Building	LS	1		
15		Pump Station Building - Electrical	LS	1		
16		Bar Reinforcing Steel (Tunnel Wall and Roof)	LB	74		
17		Reset Roadside Sign	EA	17		
18		Structural Concrete (Tunnel Wall and Roof)	CY	5		
19		Install Roadside Sign Panel on Existing Post	EA	7		
20		Object Marker (TYPE R)	EA	20		
21		Waterstop (3/4” x 3/8”)	LF	26		
22		Asphalt Membrane Waterproofing	LS	60		
23		Hot Mix Asphalt (Type A)	TON	20		
24		Remove Existing Pump Station Building	LS	1		
25		Water Pollution Control	LS	1		

TOTAL BID
FOR PART "A" ITEMS (Work 1 and Work 2,): = $ _____

TOTAL BID FOR PART "B"
TIME FOR DESIGNATED
PORTION OF WORK (Work 1):

_____ x $7,000 = $ _____

CALENDAR DAYS BID FOR DESIGNATED PORTION OF WORK (Work 1) (Not to exceed 285 days) — COST per DAY

TOTAL BID FOR COMPARISON
(COST PLUS TIME FOR DESIGNATED
PORTION OF WORK IS SUM OF TOTAL BID FOR PART A
PLUS TOTAL BID FOR PART "B"): = $ _____

SUBMITTED BY:

Full and Correct Name of Bidder:

_____

_____

Business Address:

_____

_____

Phone: _____

Fax: _____

California Contractor's License:

Number: _____

Class: _____

Expires: _____

CONTRACTOR INFORMATION

The names of all persons as principals interested in the foregoing bid are as follows:

(IMPORTANT NOTICE: If Bidder or other interested person is a corporation, give legal name of corporation, and names of the President and Secretary thereof; if a partnership, give name of the firm, also names of all individual partners composing firm; if Bidder or other interested person is an individual, give first and last names in full. If a Bidder is a joint venture, supply the above information for each joint venture partner.)

_____

_____

_____

_____

_____

The person signing this Bid Form for the Bidder certifies that he or she is authorized by the Bidder to do so and that the Bidder shall be bound contractually by that signature.

Signature _____

Name _____
(Print)

Title _____

Date _____

BID FORM #2

BIDDER'S BOND

KNOW ALL PEOPLE BY THESE PRESENTS: That

WHEREAS the undersigned, _____

as Principal and _____

as Surety, are held and firmly bound unto the Bay Area Toll Authority, a political subdivision of the State of California (hereinafter called "BATA") in the penal sum of **10% of the Total Contract Price** of the Principal above named, submitted by said Principal to BATA for the work described below, for the payment of which sum in lawful money of the United States, well and truly to be made, we bind ourselves, our heirs, executors, administrators and successors, jointly and severally, firmly by these presents.

The condition of this obligation is such that a Bid to BATA for performance of that certain construction described as

CONTRACT NO. BATA-011

SFOBB TOLL PLAZA IMPROVEMENTS

has been submitted by Principal to BATA.

NOW THEREFORE, if the aforesaid Principal shall not withdraw said bid within **120 calendar days** after said opening, and shall within the period specified therefore, or if no period be specified, within **six working days** after the prescribed forms are presented to Principal for signature, enter into a written contract with BATA in the prescribed form in accordance with the Bid as accepted, and file two bonds with BATA; a Performance Bond in the amount of **100%** of the Contract Amount to guarantee faithful performance of the work under the Contract and a Payment Bond in the amount of **100%** of the Contract Amount to guarantee payment for labor and materials, as required by law, or in the event of the withdrawal of said Bid within the period specified or the failure to enter into such contract and give such bonds within the time specified, if the Principal shall pay BATA the difference between the amount specified in said Bid and the amount for which BATA may procure the required work, if the latter amount be in excess of the former, together with all costs incurred by BATA in again calling for bids, should that become necessary, then the above obligation shall be void and of no effect, otherwise to remain in full force and effect.

Surety, for value received, hereby stipulates and agrees that no change, extension of time, alteration or addition to the terms of the Contract on the call for Bids, or to the work to be performed thereunder, shall in any way affect its obligation under this Bond, and it does hereby waive notice of any such change, extension of time, alteration or addition to the terms of said Contract or the call for bids, or to the work, or to the specifications.

In the event suit is brought upon this Bond by BATA and judgment is recovered, the Surety shall pay all costs incurred by BATA in such suit, including a reasonable attorney's fee to be fixed by the court in accordance with applicable statutory law.

IN WITNESS WHEREOF, we have hereunto set our hands and seals on this _____ day of _____, 2012.

PRINCIPAL:	**SURETY:**
_____ (Company)	_____ (Company)
_____ (Signature)	_____ (Signature)
_____ (Name – Please Print)	_____ (Name – Please print)
_____ (Title)	_____ (Title)

NOTE: Signatures of those executing for Surety must be acknowledged by a Notary.

NOTE TO SURETY COMPANY:

The following form of acknowledgement should be used. If any other form of acknowledgement is used, there must be submitted a certified copy of unrevoked resolution of authority for the attorney-in-fact.

SURETY COMPANY ATTORNEY-IN-FACT

State of California)

County of _____)

On _____, before me, the undersigned, a Notary Public in and for

the State, personally appeared_____, known to me to be the duly authorized Attorney-in-Fact of the corporate Surety named in the within instrument, known to me to be authorized to execute that instrument on behalf of said corporation, known to me to be the person whose name is subscribed to such instrument as the Attorney-in-Fact of said corporation, and acknowledged to me that he (she) subscribed the name of said corporation thereto as Surety, and his (her) own name as Attorney-in-Fact and that said corporation executed the same.

WITNESS MY HAND AND OFFICIAL SEAL:

(SEAL)

_____
Notary Public for the State of California

Acknowledgement by Attorney-in-Fact must be attached.
Corporate seals of Principal and Surety must be attached.

BID FORM #3

DESIGNATION OF SUBCONTRACTORS IN COMPLIANCE WITH THE SUBLETTING AND SUBCONTRACTING FAIR PRACTICES ACT CONTRACT NO. BATA-011

Bidder:_____

Bidder shall completely fill in the form below for each proposed subcontract in excess of one-half percent of Bidder's Total Contract Price or, in bids for the construction of streets or highways, including bridges, in excess of one-half percent of the Bidder's Total Contract Price or $10,000, whichever is greater, in compliance with the Public Contract Code of the State of California, Sections 4100-4114.

Name of Subcontractor	City/State	Portion of Work/Bid Item

Total Contract Amount:$ _____ Amount to be subcontracted: $_____

Percentage to be Subcontracted: _____%

BID FORM #4

AFFIDAVIT OF NON-COLLUSION
to be executed by Bidder and submitted with bid

CONTRACT NO. BATA-011

SFOBB TOLL PLAZA IMPROVEMENTS

State of California)
)
County of _____) .

_____
(Name)
being first duly sworn, deposes and says he or she is

_____ of _____
(Position / Title) (Company)

the party making the foregoing bid and that the bid is not made in the interest of, or on behalf of, any undisclosed person, partnership, company, association, organization, or corporation; that the bid is genuine and not collusive or sham; that the Bidder has not directly or indirectly induced or solicited any other Bidder to put in a false or sham bid; and has not directly or indirectly colluded, conspired, connived, or agreed with any Bidder or anyone else to put in a sham bid, or that anyone shall refrain from bidding; that the Bidder has not in any manner directly or indirectly, sought by agreement, communication, or conference with anyone to fix the bid price of the Bidder or any other Bidder, or to fix any overhead, profit, or cost element of the bid price, or of that of any other Bidder, or to secure any advantage against the public body awarding the contract of anyone interested in the proposed contract; that all statements contained in the bid are true; and, further, that the Bidder has not, directly or indirectly, submitted his or her bid price or any breakdown thereof, or the contents thereof, or divulged information or data relative thereto, or paid, and will not pay, any fee to any corporation, partnership, company association, organization, bid depository, or to any member or agent thereof to effectuate a collusive or sham bid.

_____
Signature of Affiant

Subscribed and sworn to before me on this _____day of _____, 2012.

at _____, _____.
(City) (State)

_____
Signature of Notary Public or Officer Taking Oath

Seal of Notary Public or
Officer Taking Oath

BID FORM #5

Iran Contracting Act
(Public Contract Code sections 2202-2208)

Prior to bidding on, submitting a proposal or executing a contract or renewal for a BATA contract for goods or services of $1,000,000 or more, a Proposer must either: a) certify it is not on the current list of persons engaged in investment activities in Iran created by the California Department of General Services ("DGS") pursuant to Public Contract Code section 2203(b) and is not a financial institution extending twenty million dollars ($20,000,000) or more in credit to another person, for 45 days or more, if that other person will use the credit to provide goods or services in the energy sector in Iran and is identified on the current list of persons engaged in investment activities in Iran created by DGS; or b) demonstrate it has been exempted from the certification requirement for that solicitation or contract pursuant to Public Contract Code section 2203(c) or (d).

To comply with this requirement, please insert your Proposer or financial institution name and Federal ID Number (if available) and complete one of the options below. Please note: California law establishes penalties for providing false certifications, including civil penalties equal to the greater of $250,000 or twice the amount of the contract for which the false certification was made; contract termination; and three-year ineligibility to bid on contracts. (Public Contract Code section 2205.)

OPTION #1 - CERTIFICATION
I, the official named below, certify I am duly authorized to execute this certification on behalf of the vendor/financial institution identified below, and the vendor/financial institution identified below is not on the current list of persons engaged in investment activities in Iran created by DGS and is not a financial institution extending twenty million dollars ($20,000,000) or more in credit to another person/vendor, for 45 days or more, if that other person/vendor will use the credit to provide goods or services in the energy sector in Iran and is identified on the current list of persons engaged in investment activities in Iran created by DGS.

Proposer Name/Financial Institution (Printed)	*Federal ID Number (or n/a)*
By (Authorized Signature)	
Printed Name and Title of Person Signing	
Date Executed	*Executed in*

OPTION #2 – EXEMPTION
Pursuant to Public Contract Code sections 2203(c) and (d), a public entity may permit a Proposer/financial institution engaged in investment activities in Iran, on a case-by-case basis, to be eligible for, or to bid on, submit a proposal for, or enters into or renews, a contract for goods and services.

If you have obtained an exemption from the certification requirement under the Iran Contracting Act, please fill out the information below, and attach documentation demonstrating the exemption approval.

Proposer Name/Financial Institution (Printed)	*Federal ID Number (or N/A)*
By (Authorized Signature)	
Printed Name and Title of Person Signing	*Date Executed*

BID FORM #6

Contractors Reference Form

Name of Contractor _____

Representative Name & Title _____

Phone Number _____

References must not be relatives of the contractor's representative or owners. The references given must be for commercial clients with contracts in excess of $100,000 each and similar in nature to the Specifications as outlined in this IFB.

1. **Client's Name** _____

Contact Person _____

Address _____

City & Zip Code _____

Phone Number & Email _____

2. **Client's Name** _____

Contact Person _____

Address _____

City & Zip Code _____

Phone Number & Email _____

3. **Client's Name** _____

Contact Person _____

Address _____

City & Zip Code _____

Phone Number & Email _____

SECTION 6. SPECIAL CONDITIONS

SC-1 Indemnification

Consistent with California Civil Code Section 2782 and except where the injury, loss, damage or expense arises from the sole or active negligence or the willful misconduct of BATA or Caltrans, Contractor agrees to indemnify and hold BATA, Caltrans and their commissioners, directors, officers, employees and agents harmless from all claims, demands, suits, losses, damages, injury, and liability, direct or indirect (including any and all costs and expenses in connection therewith), incurred by reason of any act or omission of Contractor, its officers, agents, employees and subcontractors or any of them, under or in connection with this contract; and Contractor agrees at its own cost expense and risk to defend any and all claims, demands, suits, or other legal proceedings brought or instituted against BATA, Caltrans, or their commissioners, directors, officers, agents, and employees, or any of them arising out of such act or omission, and to pay and satisfy any resulting judgments.

SC-2 Insurance

2.1 Minimum Coverage

Contractor shall, at its own expense, obtain and maintain in effect at all times during the life of this Agreement the following types of insurance against claims, damages and losses due to injuries to persons or damage to property or other losses that may arise in connection with the performance of work under this Agreement, placed with insurers with a Best's rating of A-X or better.

2.1.1 Workers' Compensation Insurance, as required by law, and Employer's Liability Insurance in an amount no less than $1,000,000 (for bodily injury by accident and by disease (policy limit and each employee)). Such policy shall contain a Waiver of Subrogation endorsement in favor of BATA. Such Workers Compensation & Employers Liability may be waived, if and only for as long as Contractor is a sole proprietor with no employees. Should any bridge work require coverage for the United States Longshore Harbor Workers Act, Contractor agrees to furnish proof of insurance if required.

2.1.2 Commercial General Liability Insurance ("occurrence" form), with a combined single limit of not less than $1,000,000 for bodily injury and property damage each occurrence, a combined single limit of not less than $1,000,000 for personal injury and advertising injury, and $2,000,000 general aggregate applying separately to this project.

2.1.3 Owned, Non-Owned and Hired Automobile Liability Insurance in the amount of $1,000,000 each accident.

2.1.4 Contractor to carry Umbrella insurance in the amount of $2,000,000 providing excess limits over Employers Liability, Auto Liability and General Liability.

2.1.5 Property Insurance Contractor at Contractor's expense shall obtain a policy or policies of insurance covering loss or damage, including loss of use, for Contractor's

own Business Personal Property and materials or property to be purchased and/or installed on behalf of BATA in an amount equal to the full replacement value thereof, as same may exist from time to time. Such policy shall contain a Waiver of Subrogation endorsement in favor of BATA. Coverage shall be secured for the life of the project, within the definition of "Special Form," and shall include coverage for installation and testing of any equipment that is to be installed or become part of any real property. If such insurance coverage has a deductible clause, the Contractor shall be also liable for the deductible.

2.2 Deductibles

Any deductibles or self-insurance retentions over $10,000 are subject to the approval of BATA.

2.3 Notice of Termination

All Contractor policies shall provide that the insurance carrier shall give written notice to BATA at least 60 days prior to cancellation, non-renewal or material change of coverage in the policy or policies, and shall provide notice of such change to BATA and any other additional insured.

2.4 Additional Provisions

Each policy or policies of insurance described in SC 2.1, above shall contain the following provisions:

2.4.1 Inclusion of BATA, Caltrans, and their Commissioners, directors, officers, representatives, agents and employees, as additional insureds with respect to work or operations in connection with this Agreement. This provision shall only apply to Commercial General Liability Insurance and Automobile Liability Insurance.

2.4.2 Endorsement providing that such Commercial General Liability insurance and Automobile Liability insurance is primary insurance and no insurance of BATA or Caltrans will be called upon to contribute to a loss.

2.5 Claims Made Coverage

If any insurance specified above shall be provided on a claim-made basis, then in addition to coverage requirements above, such policy shall provide that:

2.5.1 Policy retroactive date coincides with or precedes the Contractor's start of work including subsequent policies purchased as renewals or replacements).

2.5.2 Contractor shall make every effort to maintain similar insurance for at least three (3) years following project completion, including the requirement of adding all named insureds.

2.5.3 If insurance is terminated for any reason, Contractor agrees to purchase an extended reporting provision of at least three (3) years to report claims arising from work performed in connection with this Agreement.

2.5.4 Policy allows for reporting of circumstances or incidents that might give rise to future claims.

2.6 Certificates of Insurance

Promptly on execution of this Agreement and prior to commencement of any work hereunder, Contractor shall deliver to BATA Certificates of Insurance verifying the aforementioned coverages. Such certificates shall make reference to all provisions and endorsements referred to above and shall be signed on behalf of the insurer by an authorized representative thereof. Contractor agrees, upon written request by BATA, to furnish copies of such policies or endorsements, certified by an authorized representative of the insurer. Contractor agrees to furnish to the BATA Project Manager a copy of all Additional Insured endorsements required under the Agreement within sixty (60) days of the Effective Date of the Agreement.

2.7 Disclaimer

The foregoing requirements as to the types and limits of insurance coverage to be maintained by Contractor are not intended to and shall not in any manner limit or qualify the liabilities and obligations otherwise assumed by Contractor pursuant hereto, including, but not limited to, liability assumed pursuant to SC-1 of these Special Conditions.

2.8 Subcontractor's Insurance

Contractor shall require each of its subcontractors to provide the aforementioned coverages, unless such coverages are waived or reduced in writing by the BATA Project Manager.

2.9 Work and Materials Insurance

The Contractor shall be responsible for all loss or damage, howsoever caused, to the work and materials, until final acceptance by BATA. Accordingly, the Contractor shall also procure and maintain at its own expense Work and Materials insurance including but not limited to:

1. Builder's Risk,
2. Course of Construction,
3. Installation Floater or
4. Similar first-party property insurance covering the interest of the Contractor, BATA, and Caltrans as follows:

2.9.1 Coverage shall be provided on an "all-risk" basis. Coverage <u>does not</u> need to include the perils of earth movement and water damage.

2.9.2 Coverage shall be provided on the work and materials which is the subject of this Agreement, whether in process or manufacture or finished, including "in transit" coverage to the final agreed upon destination of delivery, and including loading and unloading operations, and such coverage shall be in force until the work and materials are accepted by BATA.

2.9.3 Coverage shall be in an amount no less than the full replacement value of the finished work and materials with no periodic reporting requirements.

2.9.4 The deductible shall not exceed $10,000 per occurrence and shall be borne by the Contractor.

Loss, if any, shall be adjustable with and payable to BATA as trustee for all entities having an insurable interest.

SC-3 Contract Bonds

Prior to execution of the Contract, the Contractor shall file with BATA on the forms provided herein, two surety bonds in the amounts and for the purposes noted below, duly executed by a reputable surety company satisfactory to BATA; *provided, however,* that no bonds are required on contracts of $25,000 or less. Contractor shall pay all premiums and costs relating to required bonds, whether direct or incidental thereto. Both Contractor and surety shall sign each bond.

3.1 Payment Bond

The Payment Bond shall be in an amount of 100% of the bid for Part "A" Items inserted in Part A on Bid Form #1 and shall inure to the benefit of persons performing labor or furnishing materials in connection with the work of the proposed Contract. This bond shall be maintained in full force and effect until all work under the Contract is completed and accepted by BATA, and until all claims for materials and labor have been paid.

3.2 Performance Bond

The Performance Bond shall be in an amount of 100% of the bid for Part "A" Items inserted in Part A on Bid Form #1 and shall insure the faithful performance by the Contractor of all work under the Contract. It shall also insure the replacing of, or making acceptable, any defective materials or faulty workmanship.

3.3 Surety Requirements

Sureties for necessary bonds (including Bid Bond, Performance Bond and Payment Bond) shall be executed by an admitted surety(ies) insurer acceptable to BATA with a Best Guide Rating of A7 or better and authorized to execute such in the State of California.

Should any surety or sureties be deemed unsatisfactory at any time by BATA notice will be given the Contractor to that effect, and Contractor shall forthwith substitute a new surety or sureties satisfactory to BATA, at the expense of the Contractor; *provided, however,* that the time set out in the Notice of Award for submitting bonds shall not be extended thereby. No further payment shall be deemed due or will be made under the Contract until the new sureties qualify and are accepted by BATA.

All alterations, time extensions, extra and additional work, and other changes authorized by the Specifications, or any part of the Contract, may be made without securing consent of the surety or sureties on the contract bonds.

SC-4 Time for Performance

The number of days specified in Part B of the Schedule of Quantities and Prices of the contract bid form shall be the basis of the time of performance for all work plus the number of days to remove the existing pump station building and to construct Pump Station Building and associated Pump Station Building electrical work; and shall not exceed 285 calendar days, commencing on the sixth (6th) calendar day following the issuance by BATA of a Notice of Award (NOA) unless otherwise specified in the Notice to Proceed.

Should the Contractor fail to maintain the progress of the work in conformance with SC-23 "Progress Schedule," additional shifts will be required to the extent necessary to ensure that the progress conforms to the above mentioned schedule and that the work will be completed within the time limit specified.

Full compensation for any additional costs occasioned by compliance with the provisions in this section shall be considered as included in the prices paid for the various contract items of work and no additional compensation will be allowed therefore.

SC-5 Beginning of Work, Time of Completion, and Liquidated Damages

The Notice to Proceed is anticipated to be issued around September 18, 2012.

Do not start work at the job site until the Engineer approves Contractor's submittal for:

1. Shop Drawings for cladding and cladding installation sequences
2. Traffic management plan
2. Baseline Progress Schedule (Critical Path Method) – resource loaded
3. Crash Cushion shop drawings

4. Water Pollution Control Plan
5. Notification of Dispute Resolution Advisor (DRA) or Dispute Review Board (DRB) nominee and disclosure statement as specified in Section 24, "Dispute Resolution," of the Standard Specifications.

Prior to issuance of Notice to Proceed Contractor may enter the job site only to measure controlling field dimensions and locating utilities. Do not start other work activities until all the submittals from the above list are approved and the following information is submitted:

1. Notice of Materials to Be Used and ordering of the materials.
2. Contingency plan for reopening closures to public traffic.
3. Written statement from the vendor that the order for the sign panels has been received and accepted by the vendor. The statement must show the dates that the materials will be shipped.
4. Written statement from the vendor that the order for electrical material has been received and accepted by the vendor. The statement must show the dates that the materials will be shipped.
5. Written statement from the vendor that the order for structural steel has been received and accepted by the vendor. The statement must show the dates that the materials will be shipped.

Except for measuring controlling field dimensions and locating utilities, do not begin work at the job site until the Water Pollution Control Program (WPCP) is received and approved.

Contractor may start work at the job site if:

1. Contractor obtain required approval for each submittal, or
2. The Engineer authorizes it in writing

The Contractor's attention is directed to the Section 13, "Signal, Lighting and Electrical Systems" section of these Special Provisions and to the plans for notification, scheduling, and time limitations on system interruptions.

The second through fourth paragraphs, inclusive, and the first sentence of the fifth paragraph of Section 8-1.06, "Time of Completion," of the Standard Specifications shall not apply. A working day is defined as any day, with no exceptions.

Designated Portion of Work 1: Complete all work associated with constructing Crash Cushion-Quadguard System,traffic signs,the stairway No. 7 removal, constructing recladding, electrical and all painting work at the Toll Plaza Canopy. Bids in which the number of calendar days bid for completion of the Designated Portion of Work 1 exceed 285 calendar days will be considered non-responsive and will be rejected.

The Designated Portion of Work 1 must be diligently prosecuted to completion before the expiration of the number of working days bid. Liquidated damages are $7,000 per day starting

on the first day after exceeding the number of working days bid for completion of Designated Portion of Work 1. The number of working days bid for Designated Portion of Work 1 is PART B of the contract Schedule of Quantities and Prices of the contract Bid Form #1.

Designated Portion of Work 2: Complete all work associated with the removing of the existing pump station building and constructing Pump Station Building and performing Pump Station Building Electrical work.

The Designated Portion of Work 2 must be diligently prosecuted to completion before the expiration of the number of 285 calendar days after the Notice to Proceed has been issued. Liquidated damages are $7,000 per day starting on the first day after the expiration of 285 calendar days after the date the Notice to Proceed was issued. The Designated Portion of Work 2 is included in PART A of the Schedule of Quantities and Prices of the contract Bid Form #1.

The Contractor agrees that its failure to complete the work or any part thereof within the time periods specified above in SC-4, Time of Performance, as such time periods or dates may be revised by Change Order will result in damages being sustained by BATA. Since it is impractical and infeasible to determine the actual amount of such damage, it is further agreed that the Contractor shall pay to BATA, as agreed, fixed and liquidated damages and not as a penalty, the amount specified hereunder for each day of delay or part thereof until such work or part thereof is completed and accepted, and the Contractor and its surety shall be liable for the amount thereof.

BATA may deduct the sum of liquidated damages from progress or final payment(s) due under this Contract as follows:

$7,000 per day for each and every calendar day's delay in completion of all work at the Bay Bridge Toll Plaza after contract days, which is PART B Calendar day bid plus the number of days to remove existing pump station building, construct pump station building and pump station building electrical.

SC-6 Contract Data Requirements

The Contractor shall submit to BATA the items shown on the Contract Data Requirement List and the Technical Submittals List (both appearing in this Section 6.0, Special Conditions) in compliance with the times and in the number of copies specified therein. Requirements and procedures for preparing and transmitting items shown on the Technical Submittals List shall conform to the following:

6.1 Drawings

The Contractor shall prepare working and shop drawings as required by BATA for the performance of the work. Drawings shall be prepared on a reproducible sheet measuring 22 inches x 34 inches, unless otherwise approved. Each drawing shall have a blank area 5 inches x 5

inches minimum, located above the title block, for the acceptance stamp. The title block shall display the following:

1. Contract number and name
2. Number and title of drawing
3. Date of drawing or revision
4. Name of the Contractor and Subcontractor originating drawing
5. Clear identification of contents and location of work
6. Structural calculations signed and sealed by a California licensed civil Engineer**,** where applicable.

6.2 Detail Drawings

The Contractor shall furnish detail drawings for temporary work and method of proposed construction for the safe and successful completion of the work.

6.3 Submittal

Cover Letter Submittals shall be accompanied by a "Submittal Cover Letter" form neatly and properly filled out. Forms will be furnished by BATA.

6.4 Copies of Drawings

The Contractor shall submit two reproducible and six legible copies of complete and detailed working and shop drawings, which shall be suitable for microfilming, to BATA. Such drawings shall include but not be limited to:

1. Fabrication and erection drawings, schedule drawings and manufacturer's scale drawings. If requested by BATA, Contractor shall furnish calculations and information substantiating the details shown on the drawings satisfactory to BATA.
2. Plans for temporary structures, and for such other work as may be required for construction, which does not become an integral part of the completed project. The Contractor shall submit two copies of the calculations and other information needed to describe in detail the temporary structures or systems and their intended use.

All submittals for electrical equipment shall conform to the provisions of the contract. All electrical materials shall be tagged in conformance with the provisions of GC-49, Certificates of Compliance and Testing**,** before delivery to the work site. Untagged electrical materials will be rejected.

6.5 Time for Submittal

The Contractor shall submit drawings and schedules sufficiently in advance of construction requirements as indicated in SC-51. The Contractor shall also submit six hard copies and one electronic copy of supporting data such as manufacturer's literature for all items.

The approval of drawings and schedules will be general and shall not be construed as:

1. Permitting any departure from contract requirements;
2. Offering relief from the responsibility for any errors, or omissions including details, dimensions, and materials;
3. Approving departures from details furnished by the Engineer, except as otherwise provided in **Section 10.0 Construction Details**.

6.6 Variations

If drawings show variations from contract requirements because of standard shop practice or for any other reason, such variations shall be described in the letter of submittal.

1. BATA may approve or reject any or all variations.
2. If variations result in an adjustment to the contract price or time for performance, the adjustment shall be subject to approval by BATA.
3. Failure to describe variations shall not relieve the Contractor from the responsibility of executing the work in accordance with the Contract, even though such drawings have been approved.

6.7 Corrections

If corrections to the drawings are required, each print will be marked "MAKE CORRECTIONS NOTED" or "AMEND AND RESUBMIT" and the required corrections will be explained. One print and one reproducible copy will be returned for correction.

6.8 Re-submittals

Re-submittals will be handled in the same manner as first submittals, and the same review time shall apply.

1. Specific attention shall be directed to revisions other than those requested by BATA on previous submittals by an accompanying letter or on the resubmitted drawings.
2. If any corrections shown on the drawings constitute a change of contract requirements, BATA shall be notified, as previously specified.

6.9 Acceptance

If accepted by BATA, each copy of the drawing will be stamped and dated indicating acceptance. One print and one reproducible copy will be returned.

6.10 Changes

When working and shop drawings have been completed to the satisfaction of BATA, the construction shall be carried out in accordance with such drawings, and no changes shall be made thereon except upon written direction from the Engineer.

During execution of the work, the Contractor shall use only drawings that are either stamped "MAKE CORRECTION NOTED" or "NO EXCEPTIONS TAKEN" and bear BATA's signature.

6.11 Damages

The Contractor shall take responsibility for, and bear all cost of, damages that may result from ordering material or from proceeding with work before approval by BATA.

6.12 Samples

The Contractor shall furnish samples as specified and requested by BATA as soon as possible after request. Unless otherwise indicated, not less than two identical samples of each type required shall be submitted.

Shipping charges on samples shall be prepaid by the Contractor. Products for which samples are requested shall not be used until approved in writing by BATA. Each sample shall be labeled to indicate:

1. Name of project and Contract number
2. Name of the Contractor and Subcontractor or Supplier, if applicable

3. Material or equipment represented
4. Source
5. Name of producer and brand (if any)
6. References to the parts of Section 10, which are applicable to the sample
7. Location of work

Certain samples may be tested by BATA. Approved samples not destroyed in testing may be retained by BATA. Samples not approved will be returned at the Contractor's expense, if so requested at the time of submittal.

6.13 Shipment Letter

A letter shall be mailed under separate cover submitting each shipment of samples and detailing the information required in the preceding paragraph. A copy of the letter shall be enclosed with the shipment.

6.14 Test Results

Documents such as certificates, reports, and test results specified in Section 10. Construction details shall be submitted to BATA.

Three copies of each required shall be submitted, unless specified otherwise.

Notice of completion of work to hold points specified in the encroachment permit must be given to BATA fourteen (14) calendar days before estimated completion of that work.

6.15 Payment

The Contractor shall receive no separate payment from BATA for complying with the above requirements and is presumed to have allocated such costs to bid price.

SC-7 Permits and Fees

The Contractor shall be responsible for securing a copy of BATA acquired permits from BATA and shall comply with said permits requirements. The Contractor shall pay all charges required to comply with the conditions outlined in the permits.

The following permits will be obtained by BATA prior to the notice to proceed unless otherwise specified:

1. Caltrans Maintenance Permit issued to BATA and BCDC permit issued to BATA and Caltrans

The Contractor shall apply for all jurisdictional permits required to perform the work and will include the cost of the required permits in the bid price.

***Caltrans Permit** – The Contractor shall obtain a copy of the Caltrans encroachment permit issued to the Bay Area Toll Authority and shall comply with all provisions of said permit.*

Contractor shall apply for Caltrans' construction encroachment permit within two (2) calendar days after the Notice of Award. The Contractor obtained Caltrans' construction encroachment permit will require, but is not limited to, the following provisions:

1. Proof of payment and performance surety bonds.
2. Permit fee will be waived by Caltrans.
3. **Other conditions as stipulated in said permit to be issued by Caltrans to BATA.**

Full compensation for complying with these permit requirements shall be considered as included in the prices paid for the various contract items of work and no additional compensation will be allowed therefore.

SC-8 Materials & Services

8.1 Source of Supply and Quality of Materials

The Contractor shall furnish all materials required to complete the work, except materials that are designated in the specifications to be furnished by BATA ("Owner") and materials furnished by BATA.

Only materials conforming to the requirements of the specifications shall be incorporated in the work.

The materials furnished and used shall be new, except as may be provided elsewhere in these specifications or on the contract plans. The materials shall be manufactured, handled and used in a workmanlike manner to ensure completed work in accordance with the plans and specifications.

Materials to be used in the work will be subject to inspection and tests by the Engineer or the Engineer's designated representative. The Contractor shall furnish without charge such samples as may be required.

The Contractor shall furnish the Engineer a list of the Contractor's sources of materials and the locations at which those materials will be available for inspection. The list shall be submitted on a BATA-furnished form and shall be furnished to the Engineer in sufficient time to permit inspecting and testing of materials to be furnished from the listed sources in advance of their use. BATA-furnished materials shall be identified within the baseline schedule as a separate activity as detailed in SC-23, Progress Schedule. The Engineer may inspect, sample or test materials at the source of supply or other locations, but the inspection, sampling or testing will not be undertaken until the Engineer is assured by the Contractor of the cooperation and assistance of both the Contractor and the supplier of the material. The Contractor shall assure that the Engineer or the Engineer's authorized representative has free access at all times to the material to be inspected, sampled or tested.

It is understood that the inspections and tests if made at any point other than the point of incorporation in the work in no way shall be considered as a guaranty of acceptance of the material nor of continued acceptance of material presumed to be similar to that upon which inspections and tests have been made, and that inspection and testing performed by BATA shall not relieve the Contractor or the Contractor's suppliers of responsibility for quality control.

Manufacturers' warranties, guaranties, instruction sheets and parts lists, which are furnished with certain articles or materials incorporated in the work, shall be delivered to the Engineer before acceptance of the contract.

Reports and records of inspections made and tests performed, when available at the site of the work, may be examined by the Contractor.

SC-9 Delivery, Unloading and Storage

The Contractor shall be completely responsible for all delivery, unloading and storage activities required for the completion of work under this contract, including "Owner Furnished Materials" of these special conditions.

SC-10 Work Sequence & Constraints

10.1 Work Sequence

When required by these Special Conditions, the Contractor shall follow the sequence of operations as set forth therein.

Attention is directed to "Order of Work" of the Construction Details regarding work sequencing and the "Stage Construction/Traffic Handling Plans" for details of the proposed construction sequencing.

Full compensation for conforming to those requirements will be considered as included in the prices paid for the various items of work and no additional compensation will be allowed thereof.

10.2 Coordination Refer to Article GC-39 Cooperation/ Coordination and Work by Others.

It is anticipated that work by other Contractors may be in progress adjacent to and within the limits of this project during progress of the work on this contract at the all toll bridge Toll Plazas. Progress schedules for other work/contracts, if available, may be inspected by the Contractor upon approval by the Engineer. Such progress schedules are tentative and cannot be guaranteed accurate.

The Contractor shall coordinate its Work with all other Contractors, utility companies, and subcontractors performing work on or adjacent to the site. The Contractor shall schedule its work so as to avoid conflicts with other Contractors and to avoid damage to completed or incomplete Work. The Contractor shall be responsible for any damage to the work of other

Contractors or subcontractors if the Contractor's actions resulted in such damage. The Contractor shall take immediate action to remedy such damage so as to not delay the immediate prosecution of the work.

Full compensation for providing cooperation for work by others shall be considered as included in the prices for the various items of work involved and no additional compensation will be allowed thereof.

No State-owned parcels adjacent to the right of way are available for the exclusive use of the Contractor within the contract limits. The Contractor shall secure, at the Contractor's own expense, areas required for plant sites, storage of equipment or materials, or for other purposes.

No area is available within the contract limits for the exclusive use of the Contractor. However, temporary storage of equipment and materials on State property may be arranged with the State, subject to the prior demands of State maintenance forces and to other contract requirements. Use of the Contractor's work areas and other State-owned property shall be at the Contractor's own risk, and the State or BATA shall not be held liable for damage to or loss of materials or equipment located within such areas.

The Contractor shall obtain encroachment permits prior to occupying State-owned parcels outside the contract limits. The required encroachment permits may be obtained from the Department of Transportation, Permit Engineer.

Residence trailers will not be allowed within the highway right-of-way.

The Contractor shall remove equipment, materials, and rubbish from the work areas and other State-owned property that the Contractor occupies. The Contractor shall leave the areas in a presentable condition in conformance with the provisions in **GC-53. Final Clean Up** and **GC-55, Final Inspection and Acceptance of the Work**.

The Contractor shall secure, at the Contractor's own expense, areas required for plant sites, storage of equipment or materials or for other purposes, if sufficient area is not available to the Contractor within the contract limits, or at the sites designated on the plans outside the contract limits.

SC-11 Mobilization

11.1 Mobilization

Mobilization shall consist of preparatory work and operations, including, but not limited to, those necessary for the movement of personnel, equipment, supplies and incidentals to the project site; for the establishment of all offices, buildings and other facilities necessary for work on the project; and for all other work and operations which must be performed or costs incurred prior to beginning work on the various contract items on the project site.

11.2 Payment

Attention is directed to Section GC-59, Invoicing and Progress Payments. Payments for mobilization will be made as follows:

When the monthly progress payment invoice of the amount earned, not including the amount earned for mobilization, is 5 percent or more of the original contract amount, 50 percent of the contract item price for mobilization or 5 percent of the original contract amount, whichever is the lesser, will be included in the invoice for payment.

When the monthly partial payment invoice of the amount earned, not including the amount earned for mobilization, is 10 percent or more of the original contract amount, the total amount earned for mobilization shall be 75 percent of the contract item price for mobilization or 7.5 percent of the original contract amount, whichever is the lesser, and that amount will be included in the invoice for payment. When the monthly partial payment invoice of the amount earned, not including the amount earned for mobilization, is 20 percent or more of the original contract amount, the total amount earned for mobilization shall be 95 percent of the contract item price for mobilization or 9.5 percent of the original contract amount, whichever is the lesser, and that amount will be included in the invoice for payment.

When the monthly partial payment invoice of the amount earned, not including the amount earned for mobilization, is 50 percent or more of the original contract amount, the total amount earned for mobilization shall be 100 percent of the contract item price for mobilization or 10 percent of the original contract amount, whichever is the lesser, and that amount will be included in the invoice for payment.

After acceptance of the contract pursuant to GC-55, Final Inspection and Acceptance of All or a Portion of the Work, the amount, if any, of the contract item price for mobilization in excess of 10 percent of the original contract amount will be included for payment in the first estimate made in conformance with the provisions in GC-59, Invoicing and Progress Payments.

The contract lump sum price paid for mobilization shall include full compensation for furnishing all labor, materials, tools, equipment and incidentals, and for doing all the work involved in mobilization as specified herein.

The adjustment provisions in GC-65, Change Requests and Change Notices, and in GC-66, Change Order, and the retention of funds provisions in GC-59 shall not apply to the contract lump sum item of mobilization.

SC-12 Sound Control Requirements

Sound control shall conform to the provisions in Section 7-1.01I, "Sound Control Requirements," of the Standard Specifications and these Special Provisions.

The noise level requirement shall apply to the equipment on the job or related to the job, including but not limited to trucks, transit mixers or transient equipment that may or may not be owned by the Contractor. The use of loud sound signals shall be avoided in favor of light warnings except those required by safety laws for the protection of personnel.

Payment for conforming to the requirements of this section shall be considered as full compensation for furnishing all labor, materials, tools, equipment, and incidentals, and for performing all work involved in completing the requirements of this section, and shall be considered as included in the prices paid for the various contract items of work. No additional compensation will be allowed therefore.

SC-13 Worker's Safety Provisions

The Contractor shall promptly and fully comply with, carry out and shall without separate charge therefore to the owner enforce compliance with the safety and first aid requirements stated herein, prescribed by applicable laws and regulations and those prescribed by an official or representative charged with the enforcement thereof. The Contractor shall take such other measures as may be necessary so that work shall be done in a safe manner and that the safety and health of employees and the people of local communities are safeguarded. Compliance with these Special Conditions by subcontractors is the responsibility of the Contractor.

13.1

The Contractor shall be responsible for initiating, maintaining and supervising all safety precautions and programs in connection with the Work. To that end the Contractor shall: (1) No later than ten (10) days after receipt of the Notice of Award, submit for review Contractor's Injury Prevention Program (IPP), which shall be site and task specific, and shall meet or exceed the requirements of BATA's Injury Prevention Program, and shall comply with California Labor Code Section 6401.7. Contractor will be responsible for overseeing compliance of their Subcontractors IPP, upon request, the Subcontractors IPP may be reviewed by BATA; and (2) No later than ten days after receipt of Notice of Award, submit the resume of the full time, qualified Safety Representative(s) who reports directly to the Contractor's Project Manager or Superintendent, and allocates 100% of their time to safety oversight for field operations on the above mentioned project. The Contractor's Safety Representative(s) shall have a minimum of five (5) years heavy construction experience in administering safety programs on construction job sites, the last two of which have been administering safety in the construction discipline for which Contractor is contracting with Owner. The Contractor Safety Representatives(s) shall be onsite during all operational hours. The full time Safety Representative(s) shall set up, carry forward and aggressively and effectively maintain the aforementioned Safety Program covering all phases of the Work. If at any time the Contractor wishes to replace their Safety Representative(s), the Contractor must provide written notice thirty (30) days prior to change of personnel to BATA. The Contractor shall take all precautions and follow all procedures for the safety of, and shall provide all protection to prevent injury to, all persons involved in any way in the Work and all other persons, including, without limitation, the employees, agents, guests, visitors, invitees and licensees of BATA who may be involved. These precautions shall include, but in no event be limited to the provisions of BATA's IPP. This requirement applies continuously and is not limited to normal working hours.

13.2

Attention is directed to Section 6705 of the Labor Code concerning trench excavation safety plans, "Trench Safety." Excavation for any trench 1.5m or more in depth shall not begin

until the Contractor has received approval from the Engineer of the Contractor's detailed plan for worker protection from the hazards of caving ground during the excavation of that trench and any design calculations used in the preparation of the detailed plan.

The detailed plan shall show the details of the design of shoring, bracing, sloping or other provisions to be made for worker protection during the excavation. No plan shall allow the use of shoring, sloping or a protective system less effective than that required by the Construction Safety Orders of the Division of Occupational Safety and Health. If the plan complies with the shoring system standards established by the Construction Safety Orders, the plan shall be submitted at least 5 days before the Contractor intends to begin excavation for the trench.

If the plan varies from the shoring system standards established by the Construction Safety Orders, the plan shall be prepared and signed by an Engineer who is registered as a Civil Engineer in the State of California, and the plan and design calculations shall be submitted at least three (3) weeks before the Contractor intends to begin excavation for the trench. Full compensation for furnishing all plans and working drawings shall be considered as included in the prices paid for the contract items of work that the drawings relate and no additional compensation will be allowed therefore.

13.3

If the Contractor encounters on the Site material reasonably believed to be asbestos, polychlorinated biphenyl (PCB) or other Hazardous Substance (as defined in California Health and Safety Code, Chapter 6.6, and all regulations pursuant thereto and paragraph 1.5 below) which has not been rendered harmless, the Contractor shall immediately stop Work in that area affected and report the condition to BATA in writing. The Work in the affected area shall not thereafter be resumed except by written agreement of BATA and Contractor if in fact the material is asbestos or polychlorinated biphenyl (PCB) or other hazardous substance and has not been rendered harmless. The Work in the affected area shall be resumed in the absence of asbestos or polychlorinated biphenyl (PCB) or other hazardous substance, or when it has been rendered harmless, by written agreement of BATA and the Contractor, or in accordance with a final determination by an Environmental Consultant employed by BATA.

The Contractor shall not be required pursuant to GC- 9 to perform without consent any Work relating to asbestos, polychlorinated biphenyl (PCB) or other hazardous substance.

The Contractor shall not permit any hazardous substances to be brought onto or stored at the Project Site or used in the construction of the Work, except for specified materials and commonly used construction materials for which there are no reasonable substitutes. All such materials shall be handled in accordance with all manufacturers' guidelines, warnings and recommendations and in full compliance with all applicable laws. All notices required to be given with respect to such materials shall be given by the Contractor. The Contractor shall not intentionally release or dispose of hazardous substances at the Project Site or into the soil, drains, surface or ground water, or air, nor shall the Contractor allow any Subcontractor, Sub-subcontractor or Supplier or any other person for whose acts the Contractor or any Subcontractor, Sub-subcontractor or Supplier may be liable, to do so. For purposes of Contract Documents, "hazardous substance" means any substance or material which has been determined

or during the time of performance of the Work is determined to be capable of posing a risk of injury to health, safety, property or the environment by any federal, state or local governmental authority.

The Contractor and Subcontractors of each tier shall provide BATA with Material Safety Data Sheets for all materials to be incorporated into or used in the prosecution of the Work to be performed, including commonly used construction materials, which contain any hazardous substance or mixture, including without limitation any chemical listed by the State of California as a chemical known to cause cancer or reproductive harm (as defined in California Health and Safety Code, Chapter 6.6, and all regulations pursuant thereto). The Material Safety Data Sheets shall contain all necessary and legally required information concerning such substances as asphalt's, solvents, adhesives, epoxy resins, roofing sealant and bonding agents, mixtures or chemicals, in a format agreed to by BATA or as required by law.

The Contractor shall set forth in writing its safety precautions and programs in connection with the Work, which meets or exceeds any and all applicable laws, ordinances, rules, regulations, and orders of any public, quasi-public, or other authority relating to the safety of persons and their protection against injury, specifically including, but in no event limited to the:

Federal Occupational Safety and Health Act of 1970, as amended, California Occupational Safety and Health Act of 1973, the Labor Code, and all rules and regulations now or hereafter in effect pursuant to the Act and the requirements of BATA as outlined in Highway Construction IPP.

IN THE EVENT OF CONFLICTING REQUIREMENTS, THE MORE STRINGENT REQUIREMENT SHALL GOVERN.

All Work, whether performed by the Contractor, or its Subcontractors of all tiers or anyone directly or indirectly employed by any of them, and all equipment, machinery, materials, tools and like items incorporated or used in the Work, shall be in compliance with and conform to:

All applicable laws, ordinances, rules, regulations, and orders of any public, quasi-public, or other authority relating to the safety of persons and their protection against injury, specifically including, but in no event limited to, the Federal Occupational Safety and Health Act of 1970, as amended, and all rules and regulations now or hereafter in effect pursuant to said Act; and Contractor shall provide, or cause to be provided, each worker on the Project Site the proper safety equipment for the duties performed by that worker and will not permit any worker on the Project Site who fails or refuses to use the same. BATA shall have the right, but not the obligation, to order Contractor to send a worker off the Project Site for the day or to discharge a worker for his or her failure to comply with safety practices.

13.4

The Contractor shall, throughout the performance of the Work, maintain adequate and continuous protection of all Work and temporary facilities against loss or damage from whatever

cause. The Contractor shall protect the property of BATA and third parties from loss or damage from whatever cause arising out of the performance of Work and shall comply with the requirements of BATA, its insurance carriers and with all applicable laws, codes, rules and regulations with respect to the prevention of loss or damage to property as a result of fire or other hazards to:

1. Employees on the Work and other persons who may be affected thereby;
2. The Work and materials and equipment to be incorporated therein, whether in storage on or off the Site, under care, custody or control of the Contractor or the Contractor's Subcontractors or Sub-subcontractors; and
3. Other property at the Site or adjacent thereto, such as trees, shrubs, lawns, walks, pavements, roadways, structures and utilities not designated for removal, relocation or replacement in the course of construction.

Solvents, oils and any other substance, which may be harmful to plant life, shall be disposed of in containers and removed from the Site. At completion of the Work, any contaminated soil shall be removed and replaced with soil of equal quality prior to contamination by the Contractor at no increase in Contract Sum.

13.5

BATA may make periodic patrols of the Project Site as a part of its normal security and safety program. The Contractor shall not be relieved of its aforesaid responsibilities and BATA shall not assume same, nor shall it be deemed to have assumed, any responsibility otherwise imposed upon the Contractor, as a result of safety patrols by BATA.

13.5.1 The Contractor shall be responsible for the payment of all fines levied against BATA arising from or related to activities over which Contractor has responsibility under Contract Documents, or for Work that does not conform to the Contract Documents.

The Contractor shall give notice in writing, at least forty-eight (48) hours before breaking ground, to all persons having interests on or near the Site, Public Utility Companies, owners of property having structures or improvements in proximity to the Site of the Work, Superintendents, Inspectors, or those otherwise in charge of property, streets, water pipes, gas pipes, sewer pipes, telephone cables, electric cables, railroads or otherwise who may be affected by the Contractor's operation, in order that they may remove any obstruction for which they are responsible and have a representative on Site to see that their property is properly protected. Such notice does not relieve the Contractor of responsibility for any damages, claims, and defense of all actions against BATA resulting from performance of such Work.

13.5.2 The Contractor shall erect and maintain, reasonable safeguards for safety and protection, including posting danger signs and other warnings against hazards, promulgating safety regulations and notifying owners and users of adjacent Sites and utilities.

13.5.3 Use or storage of explosives is prohibited.

13.5.4 The Contractor shall rebuild, repair, restore and make good all losses of, and injuries or damages to, the Work or any portion thereof (specifically including owner-supplied, equipment or other items to be utilized in connection with, or incorporated in the Work) before final acceptance of the Work. Such rebuilding, repair or restoration shall be at the Contractor's sole cost and expense unless the loss, injury or damage requiring such rebuilding, repair or restoration is caused by a hazard against which BATA is insured if the loss, injury or damage would not have occurred but for the negligent act or omission of the Contractor, or its Subcontractors of any tier or anyone directly or indirectly employed by any of them or for whose acts any of them may be liable, the rebuilding, repair or restoration shall be at the Contractor's cost and expense to the extent of the deductible in said insurance. If any policy of insurance covering loss or damage to the Work is voided due to any action of the Contractor or any of its Subcontractors of any tier, such rebuilding, repair or restoration shall be at the Contractor's sole cost and expense.

13.6

The Contractor shall designate a competent person for each task, as required by Cal-OSHA laws. The task competent person shall be approved by BATA, to be responsible for the prevention of accidents. If BATA or any public agency with jurisdiction notifies the Contractor of any claimed dangerous condition at the Site that is within the Contractor's care, custody or control, the Contractor shall take immediate action to rectify the condition at no additional cost to BATA. The Contractor shall be responsible for the payment of all fines levied against BATA for deficiencies relating to the Contractor's supervision or conduct and /or control of the Work.

The Contractor shall not load or permit any part of the construction or Site to be loaded so as to endanger safety of persons or property.

The Contractor shall not permit open fires on the Project Site.

The Contractor shall no later than ten days following award forward the Emergency Action Plans to BATA.

No later than five (5) working days prior to the arrival of a crane, the Contractor must provide the most recent annual and quadrennial certificates. The Contractor must also provide crane operator certificates from the National Commission for the Certifying of Crane Operators (NCCCO), as outlined in IPP**,** no later than five working days prior to a crane operator working onsite.

Job Hazard Analysis shall be forwarded to BATA no later than five working days prior to operation being performed. All accident investigations by the Contractor shall be forwarded to BATA no later than five working days following an accident.

The Contractor shall return all improvements on or about the Site and adjacent property which are not shown to be altered, removed or otherwise changed to conditions which existed previous to starting performance under the Contract.

13.7 Emergencies

In any emergency affecting the safety of persons or property, or in the event of a claimed violation of any Federal or State safety or health law or regulation, arising out of or in any way connected with the Work or its performance, Contractor shall ensure that at least one of Contractor's employees with authority shall be on duty during working hours, and act immediately to prevent threatened damage, injury or loss or to remedy said violation, whichever is applicable, failing which BATA may immediately take whatever action it deems necessary, including, but not limited to, suspending the Work as provided in GC-69. Contractor shall also establish and maintain adequate First Aid facilities at locations close to work areas, and mark such locations with signs of adequate size and composition. Contractor shall also ensure that at least one CPR/ first aid trained employee for every fifteen (15) employees onsite. At no time shall less than two (2) CPR/first aid trained employees be onsite during operational hours. Training records or certificates for initial and renewal CPR/ first aid training shall be forwarded to BATA no later than ten (10) days following notice of award.

SC-14 Hazardous Materials

The Contractor shall submit Material Safety Data Sheets (MSDS) for all hazardous materials being brought onto the project site, including but not limited to: asphalts, solvents, adhesives, epoxy resins, roofing sealants and bonding agents.

14.1 Aerially Deposited Lead

Aerially Deposited Lead is defined as lead deposited within the unpaved areas of the project Right of Way, primarily due to vehicle emissions. Materials with total levels of lead greater than the Total Threshold Limit Concentration (TTLC) of 1000 milligrams per kilogram (mg/kg) or solubility levels, as established by the California Waste Extraction Test (WET), greater than the Solubility Threshold Limit Concentration (STLC) of 5 milligrams per liter (mg/1) shall be considered hazardous pursuant to California Code of Regulations, Title 22. The materials with aerially deposited lead are not regulated under the Federal Resource Conservation and Recovery Act (RCRA).

Aerially deposited lead contamination has been discovered through testing of materials within the project limits.

A report describing the results of the testing of materials within the project limits is available for inspection at BATA.

Caltrans has received from the California Department of Toxic Substance Control (DTSC) a Variance regarding the use of material containing aerially deposited lead. This project is subject to the conditions of the Variance, as amended. The Variance is available for inspection at BATA.

Provisions of this section shall be made a part of every subcontract executed pursuant to this contract. The Contractor shall comply with the conditions of the variance.

Excavation, transportation, placement and handling of soils containing aerially deposited lead shall result in no visible dust. The Contractor shall have a water truck available at all times while performing earthwork, excavation or grubbing activities in work areas containing aerially deposited lead at hazardous levels.

Once the Contractor has completed the placement of materials containing aerially deposited lead, in accordance with the plans, as specified in these special conditions, the Contractor shall have no responsibility for such materials in place and shall not be obligated for further cleanup, removal or remedial actions for such materials.

Excavation, reuse, and disposal of material with aerially deposited lead shall be in accordance with all rules and regulations of agencies including, but not limited to, the following:

1. United States Department of Transportation (USDOT)
2. United States Environmental Protection Agency (USEPA) California Department of Health Services
3. California Environmental Protection Agency (Cal-EPA)
4. Department of Toxic Substances Control (DTSC), Region 2 Integrated Waste Management Board
5. Regional Water Quality Control Board (RWQCB), Region 2 State Air Resources Control Board
6. Bay Area Air Quality Management District (BAAQMD)
7. California Division of Occupational Safety and Health Administration (CAL-OSHA)

The Contractor shall prepare a project specific Health and Safety Plan to prevent or minimize exposure to potentially hazardous levels of lead. The Contractor's attention is directed to Title 8, California Code of Regulations, Section 5192 (b) (4) 03) and the Occupational Safety and Health Guidance Manual published by National Institute of Occupational Safety and Health (NIOSH), Occupational Safety and Health Administration (OSHA), and USEPA for elements of the site safety plan. The Health and Safety Plan shall contain as a minimum but not be limited to: identification of key personnel for the project, job hazard analysis for work assignments, summary of risk assessment, air monitoring plan, personal protective equipment, delineation of work zones on-site, decontamination procedures, general safe work practices, security measures, emergency response plans and worker training.

The Health and Safety Plan shall utilize monitoring and exposure standards based on Construction Standards of Title 8, California Code of Regulations Section 1532.1 and as a minimum shall contain a description of activities, specific means employed to achieve compliance, report of the technology considered, schedule for implementation of the program, a work practice program, administrative control schedule, description of arrangements for information transfer between Contractors concerning potential exposure to lead and other relevant information. The Health and Safety plan shall be approved by the Contractor's Certified Industrial Hygienist before submission to the Engineer. The plan shall be submitted to the Engineer for review and acceptance at least 15 days prior to beginning any work in areas containing aerially deposited lead.

Prior to performing any work in areas containing lead, personnel who have no prior training or are not current in their training status, including BATA, and BATA consultant's personnel, shall complete a safety training program provided by the Contractor, which meets the requirements of Title 8, California Code of Regulations, Section 1532.1.

Personal protective equipment, training, and medical surveillance required by the Contractor's Health and Safety Plan shall be supplied to BATA personnel by the Contractor. The number of BATA personnel will be five (5).

Full compensation for the Health and Safety Plan including furnishing all the labor, materials, tools, equipment, and incidentals and for doing all the work involved in preparing the Health and Safety Plan, including paying a Certified Industrial Hygienist, and for providing personal protective equipment, training and medical surveillance, as specified in these special conditions, and as directed by the Engineer shall be considered as included in the prices paid for the various items of work no additional compensation shall be allowed therefore.

14.2 Removal of Asbestos and Hazardous Substances

When the presence of asbestos or hazardous substances are not shown on the plans or indicated in the specifications and the Contractor encounters materials which the Contractor reasonably believes to be asbestos or a hazardous substance as defined in Section 25916 and 25317 of California Code of Regulations, and the asbestos or hazardous substance has not been rendered harmless, the Contractor may continue work in unaffected areas reasonably believed to be safe. The Contractor shall immediately cease work in the affected area and report the condition to the Engineer in writing.

In conformance with Section 25914.2 of the Health and Safety Code, removal of asbestos or hazardous substances including exploratory work to identify and determine the extent of the asbestos or hazardous substance will be performed by separate contract.

Pursuant to Section 25169.3 (e) of CH&SC, a DTSC certified waste hauler must transport hazardous waste to an appropriate waste disposal facility. Waste profiling and manifesting shall conform to the requirements in accordance with Health and Safety Code.

If delay of work in the area delays the current controlling operation, the delay will be considered a right of way delay and the Contractor will be compensated for the delay in conformance with the provisions in GC-32, Excusable Delays and Extension of Time.

SC-15 Construction Water Conservation

The Contractor shall, whenever possible and not in conflict with other requirements of the Contract, minimize the use of water during construction of the project. Watering equipment shall be kept in good working order; water leaks shall be repaired promptly; and washing of equipment, except when necessary for safety or for the protection of equipment, shall be discouraged. All water used for construction purposes such as dust control, compaction, cleaning streets, etc., may be reclaimed water.

SC-16 Air Pollution Control

The Contractor shall comply with all air pollution control ordinances and statutes which apply to any work performed pursuant to the contract, including any air pollution control rules, regulations, ordinances and statutes, specified in Section 11017 of the Government Code.

Unless otherwise provided in the Special Provisions, material to be disposed of shall not be burned, either inside or outside the highway right of way.

SC-17 Contractor Cooperation and Coordination

Contractor shall conform to the Sections SC-10.2, "Coordination", GS-39, "Cooperation/Coordination and Work by Others," 10.7, "Cooperation" and this section of these special conditions. Contractor shall cooperate with and coordinate its work with any private development work, utility relocation work or any other Contractor, which may be performing work in the immediate area of this work.

If required Contractor shall attend weekly coordination meeting to review construction status problems, schedule, concerns, etc. and to resolve any outstanding issues, as directed by the Engineer.

SC-18 Not Used

SC-19 Final Pay Quantities

When the estimated quantity for a specific portion of the work is designated on the plans or in the Schedule of Quantities and Prices of the contract bid form as a final pay quantity (F), the estimated quantity shall be the final quantity for which payments for the specific portion of the work will be made, unless the dimensions of the portion of the work shown on the plans are revised by BATA, or unless the portion of the work is eliminated. If the dimensions of the specific portion of the work are revised, and the revisions result in an increase or decrease in the estimated quantity of the portion of the work, the final quantity for payment will be revised in the amount represented by the changes in the dimensions. If the specific portion of the work is eliminated, the final pay quantity designated for the specific portion of the work will be eliminated. In the event that the quantity of a final pay item shown on the Schedule of Quantities and Prices of the contract bid form differs from a quantity that can be calculated from dimensions or lines shown on the Plans, the quantity shown on the Schedule of Quantities of the contract bid form and Prices shall govern.

When portions of an item have been designated on the plans or in the Schedule of Quantities and Prices of the contract bid form as final pay quantities, portions so designated will be measured and paid for in accordance with the provisions of **GC-59, Invoicing and Progress Payments**.

SC-20 Schedule of Values

Following execution of the Contract, the Contractor shall prepare and submit for approval a detailed cost breakdown of Bid Items and scheduled work activities setting forth the estimated value of the various subdivisions of the work detailed in **SC-23, Progress Schedule**. This breakdown shall be for the purpose of enabling the Engineer to check and verify the periodical invoices submitted by Contractor in connection with requests for partial payments.

Divide the Schedule of Values into sections representing the cost of each separate building or structure. Do not include work that is not part of the building or structure in the building or structure cost. Include this work under a specific section as General Work. List indirect costs and bond premiums as separate line items of work.

Identify the sections representing each building or structure as to the building or structure they represent and break them down to show the corresponding value of each craft, trade or other significant portion of the work. Provide a sub-total for each section. The Schedule of Values must be approved by the Engineer before any partial payment estimate is prepared. The sum of the items listed in the Schedule of Values must equal the contract lump sum price for building work. Do not list overhead and profit. Include bond premiums and other such items in the mobilization bid item for the entire project.

SC-21 Increase or Decreased Quantities, and Quantity Variation

Reference is made to **GC-57, Increase or Decreased Quantities, and Quantity Variation**. GC-57 is deleted in its entirety and replaced with the following:

If the actual quantity on any item of work paid for on a unit price basis varies from the quantity for such item in the Schedule of Quantities and Prices of the contract bid form by 25 percent or less, payment for the item of the work will be made at the contract unit price.

If the actual quantity of such a contract item of the work exceeds the quantity for such item in the Schedule of Quantities and Prices of the contract bid form by more than 25 percent, the compensation payable to the Contractor for the amount in excess of the 125 percent of the quantity will be reviewed by the Contractor and BATA, and an equitable adjustment may be made to the unit price for such excess amount by means of a change order to credit BATA with any reduction in cost or to compensate the Contractor for any increase in the cost resulting from the change in quantity. This review of the adjustment will be made on a force account basis in accordance with **GC-60 Force Account Payment**, at the time mutually acceptable to BATA and the Contractor.

If the actual quantity of such a contract item of the work is less than 75 percent of the quantity for such item in the Schedule of Quantities and Prices of the contract bid form , the compensation payable to the Contractor will be reviewed by the Contractor and BATA, and an equitable adjustment may be made to the unit price for the entire quantity by means of a change order credited to BATA with any reduction in cost or compensate the Contractor for any increase in cost resulting from the change in quantity. This review of the adjustment will be made on a force account basis in accordance with **GC-60 Force Account Payment**, at the time mutually

acceptable to BATA and the Contractor. The payment for the total pay quantity of the work so adjusted in accordance with these provisions included in this paragraph will in no case exceed the payment that would have been made for 75% of the original quantity at the original contract price.

SC-22 Project Close-Out Requirements - Record Drawings

During the project, Contractor shall keep a master set of drawings updated, noting any variation of the Work. Upon completion of the Work, Contractor shall produce a master "Record" set of plans by neatly transferring all such noted variations to blueprint copies of the same drawings, and shall deliver same to the Engineer for signed receipt, certification, and certification.

Payment

Full compensation for work involved in complying with the requirements in **SC-22, Project Close-Out Requirements - Record Drawings**, of these special conditions shall be considered as included in the contract prices paid for the various items of work involved and no additional compensation will be allowed therefore.

SC-23 Progress Schedule

23.1 General Requirements

Scheduling of work under this contract shall be performed by the Contractor in accordance with this **SC-23 Progress Schedule**. Development of the schedule and project status reporting requirements shall employ computerized Critical Path Method (CPM) scheduling.

All schedules prepared by the Contractor shall meet the requirements for access, sequencing, construction staging, delivery of Owner furnished materials, contract milestone and completion dates, as specified in the Contract Documents.

The approved baseline schedule, including the most recent accepted update (the Current CPM Schedule), shall be the basis for evaluating job progress and time extension requests. Responsibility for developing the schedule and monitoring actual progress, as compared to the approved baseline schedule, rests with the Contractor.

Inaccuracy of the schedule or failure of the schedule to include any element of the work shall not relieve the Contractor from responsibility for accomplishing the work in accordance with the contract requirements.

23.2 Specific Requirements

23.2.1 Software: All schedules shall be prepared using the latest version of SureTrak or Primavera Project Planner, version 3.1 software. However, other computerized scheduling programs may be allowed by BATA, and will be considered on a case-by-

case basis. Use of other scheduling software must be requested and approved in writing, prior to submission of any schedules.

23.2.2 General Submittal Requirements: The Contractor shall submit three (3) copies of each submittal item and an electronic copy on compact disk for all schedule submittals, including but not limited to baseline CPM schedule, CPM schedule update, schedule revisions, recovery schedule, Time Impact Evaluation, and mitigation plan. Unless otherwise specified in this SC-23, procedures for the submission, review and acceptance of all schedule submittals shall be per SC-6, Contract Data Requirements.

23.3 Schedule Float

23.3.1 Total Float is the amount of time between an activity's early and late start dates, or between its early and late finish dates in the CPM schedule. A baseline CPM schedule with negative float will not be accepted.

23.3.2 Float Ownership: Neither BATA nor the Contractor owns the float; the Project owns the float. As such, float is considered an expiring resource available to both parties on a non-discriminatory basis.

23.3.3 Early Completion Schedule: Should the Contractor submit a baseline schedule that shows completion dates earlier than the contract dates specified in Special Conditions SC-4 and SC-10, BATA, upon acceptance of the schedule, and at its discretion, may adjust by change order the contract dates consistent with the early completion milestone dates in the Contractor's baseline schedule. No additional compensation shall be provided to the Contractor for such adjustments to the contract milestones. In the event that BATA elects to not adjust the milestones, the amount of time between the contract milestone date and the early finish date of such milestone shall be considered project float and is subject to the provisions contained in this Special Condition. Impact to the early completion date caused by BATA will not be considered as a basis for a time extension or entitlement to extended overhead compensation unless all available float has expired.

23.4 Baseline CPM Schedule

23.4.1 Submittal: The Contractor shall prepare and submit for acceptance by BATA, a detailed CPM Schedule within 6 calendar days after Notice of Award. The schedule shall present an orderly and realistic plan for completion of the work, in conformance with all contract requirements. The data date of the baseline CPM schedule shall be the date of Notice of Award.

BATA's review and comments on the schedule shall be limited to contract compliance. If the schedule is rejected (marked "amend and resubmit"), the Contractor shall resubmit the Schedule within five (5) calendar days after receipt of rejection notice. The Contractor shall make corrections to the schedule necessary to comply with contract requirements and shall revise the schedule to address and

incorporate all review comments from the review of the baseline CPM schedule. The Contractor shall provide a line-by-line response to all comments from the review of the baseline CPM schedule.

23.4.2 Detailed Requirements: The baseline CPM schedule shall have sufficient number of activities to assure adequate planning of the project and to permit monitoring and evaluation of progress and the analysis of time impacts. It shall depict how the Contractor plans to complete the work involved and shall show all activities that defines the critical path. The baseline CPM schedule shall be time scaled and shall comply with the following requirements:

1. All activities in the schedule, with the exception of the first and last activities, shall have a minimum of one predecessor and a minimum of one successor.
2. No activity in the schedule shall have duration greater than fifteen (15) working days, with the exception of submittal, approval, fabrication and procurement activities, unless otherwise approved by BATA. Activity durations shall be the total number of actual working days required to perform an activity.
3. Durations for all schedule activities that are sensitive to weather and susceptible to weather delays will be developed so as to allow for the anticipated lost working days per month as shown in **SC-23.13, Adverse Weather Delays**.
4. Procurement of each major item or type of material or equipment, from submittal, approval, placement of the order through receipt and inspection at the job site, shall be identified as a separate activity.
5. Receipt of Owner Furnished Materials and equipment, if any, shall be identified as separate activities.
6. Dependencies (or relationships) between activities shall be shown.
7. Activities for BATA review and acceptance of submittals and shop drawings for all contract-required material and equipment shall be shown. Activities that are dependent on submittal acceptance or material delivery shall not be scheduled to start earlier than expected acceptance or delivery dates. The Contractor shall be responsible for all impacts resulting from resubmittal of shop drawings and other items.
8. Time shall be included for testing, BATA testing, training of BATA personnel, delivery of spare parts, submittal of operating and maintenance manuals, developing punch lists, completing punch list items, and clean-up of the work included in any completion milestone or contract completion.
9. The interface with the work of other Contractors and agencies such as, but not limited to, utility companies, shall be indicated.
10. Detailed subcontractor's work activities shall be shown. As determined by BATA, Contractor shall submit, on subcontractor letterhead, a statement certifying that the subcontractor concurs with the Contractor's incorporation into the baseline CPM schedule of the subcontractor's related schedules, including activity duration’s, and resource loading.
11. The schedule shall be accompanied by a list of anticipated non-work days and holidays, but shall exclude weekends from this list. This list shall be

consistent with the non-workdays and holidays identified in the Contractor's baseline CPM schedule.

23.4.3 Baseline CPM Schedule Narrative A baseline CPM schedule narrative shall be submitted. This narrative shall describe the basis, assumptions, planned sequence of work operations, production rates, equipment, resources, constraints, etc., used to develop the baseline CPM schedule.

23.4.4 Acceptance of the Baseline CPM Schedule: When the schedule is accepted, it shall be considered as the "Approved Baseline CPM Schedule" which will then be updated to reflect the current status of the work. The Approved Baseline CPM Schedule will be the basis of measuring the progress of the project. Such acceptance will be based solely upon the schedule's compliance with the contract requirements.

Acceptance of the schedule by BATA shall not relieve the Contractor of the responsibility for scheduling, sequencing, coordination and prosecuting the work to comply with the requirements of the contract.

BATA reserves the right to require that the Contractor modify, adjust, add to, or clarify any portion of the schedule which may later be discovered to be insufficient or inaccurate for planning, monitoring, or prosecuting the work. No additional compensation shall be provided for such modifications, adjustments, additions, or clarifications.

Submittal of the baseline CPM schedule and subsequent schedule updates, shall be understood to be the Contractor's representation that the submitted schedule meets all of the requirements of the contract and that work shall be executed in the sequence, durations, and methods indicated on the submitted schedule.

23.5 CPM Schedule Update

Following acceptance of the Contractor's baseline CPM schedule, the Contractor shall monitor progress of work and formally update the schedule monthly, effective the last Friday of each month, to reflect actual progress, any anticipated changes to planned activities, and corrections to out-of-sequence logic.

Each update shall show all work activities including those already completed. These completed activities shall accurately reflect "as-built" information by indicating when activities were actually started and completed, logic revisions, or activity resequencing.

The accepted updated schedule shall be considered the Current CPM Schedule.

Neither updating, changing or revising any report, schedule or narrative submitted to BATA by the Contractor under this Contract, nor BATA's review or acceptance of any such report, schedule or narrative shall have the effect of amending or modifying, in any way, the contract completion date or milestone dates or of modifying or limiting, in any way, the Contractor's obligations under this contract.

The CPM schedule update, statused through the last Friday of each month, shall be submitted within seven (7) calendar days following that status date. If BATA so requires prior to a given month's update, it may meet with the Contractor and its scheduler to review and agree upon the progress of schedule activities and proposed logic revisions for the given month. This meeting will be conducted 7 calendar days in advance of the last Friday of the month. This meeting, if required, will be referred to as the Monthly Schedule Review Meeting.

BATA will, within seven (7) calendar days after receipt of the updated CPM Schedule, either accept, accept with comments, or reject ("amend and resubmit") the submittal.

1. If accepted, no additional action by the Contractor is required for that period's submittal.
2. If accepted with comments, those comments must be incorporated into the next period's schedule update. Failure to incorporate the comments into the subsequent schedule update will be cause for rejection of the subsequent update.
3. If rejected, the Contractor will have seven (7) calendar days to incorporate BATA's comments and resubmit the schedule update for BATA's review. The Contractor shall provide a line-by-line response to all comments from BATA's review of the CPM schedule update. Only one (1) schedule resubmittal per month will be accepted by BATA. Failure to achieve an accepted schedule update for any given month will result in the forfeiture of payment for that associated progress payment period's installment of the schedule pay item (see **SC-23.15 Payment Provisions**).

23.6 Schedule Reports

The following reports for all schedules shall be submitted by the Contractor to BATA:

1. Schedule logic report listing activities, their early, late and actual start and finish dates, duration, float, responsibility code and the predecessor and successor relationship of activities sorted by early start.
2. Schedule plots presenting time scaled network diagram showing activities and their relationships.

23.7 Contract Status Report

The Contractor shall provide a written narrative of the contract status report in conjunction with each CPM schedule update which shall include:

1. Status of major project components (percent complete, amount of time ahead or behind schedule) and an explanation of how the Project will be brought back on schedule, if delays have occurred.
2. Progress made on critical activities indicated on CPM schedule.
3. Explanations for any lack of work on critical path activities planned to be performed during the previous month.
4. Explanations for any schedule changes, including changes to logic or to activity durations.
5. List of critical activities scheduled to be performed in the next three (3) week period.
6. Status of major material and equipment procurement.
7. Any delays encountered during the reporting period.

8. List of any working days lost due to weather beyond the adverse weather allowances shown in **SC-23.13, Adverse Weather Delays.**
9. Any other information pertinent to status of the Contract. The Contractor shall include additional status information requested by BATA at no additional cost.

23.8 Weekly Schedule Report

At the weekly progress meeting, the Contractor shall provide and present a time scaled three-week look-ahead schedule that contains the actual progress for the previous week and planned activities for the upcoming three weeks. The activities in the three-week look-ahead schedule shall be based upon and correlated by activity number of the Current CPM Schedule. The format of the weekly schedule report shall be subject to review and acceptance by BATA. The weekly schedule report shall be prepared using Primavera Project Planner, version 3.1, SureTrak, or Microsoft Excel software. Handwritten schedules will not be accepted by BATA. BATA may request electronic transmittal of the weekly schedule report, either by electronic mail, or compact disks, at least one day ahead of the weekly progress meeting. The weekly schedule reports submitted during a given month shall form part of the basis for the CPM schedule update provided for in **SC-23.5, CPM Schedule Update.**

23.9 Schedule Revisions

Periodic updating of the schedule to reflect actual progress shall not be considered a revision to the schedule. Since scheduling is a dynamic process, such modifications of activity durations and sequences are usual and customary occurrences. Occasions may arise, however, whether directed by BATA, requested by the Contractor, or in reaction to project events, where true revisions to the schedule are required beyond those actions associated with the mere updating of progress.

To reflect revisions to the schedule, the Contractor shall provide BATA with a written narrative with a description and a reason for each revision. For revisions affecting the sequence of work and activity durations, the Contractor shall provide a schedule logic diagram which compares the original sequence and durations to the revised sequence of work and activity durations.

Schedule revisions shall not be incorporated into any schedule update until the revisions have been accepted by BATA.

BATA will review and advise the Contractor of BATA’s decision concerning schedule revision acceptance. If the Contractor disagrees with BATA's decision, the Contractor shall, within seven (7) calendar days from receipt of BATA's decision, provide a written narrative explaining or clarifying the revision. If BATA still does not agree with the Contractor's revision, BATA's decision shall govern, and the schedule shall be updated in accordance with BATA's decision. The Contractor's failure to respond in writing within seven (7) calendar days shall be contractually interpreted as acceptance of BATA's decision and the Contractor waives its rights to subsequently dispute or file a claim regarding BATA's decision.

Upon request by BATA, Contractor shall provide the subcontractor certifications for revisions affecting any subcontractors.

23.10 Recovery Schedule

If the CPM schedule update shows a completion date over twenty (20) working days beyond any contract milestone date, or if specifically directed by BATA, the Contractor shall, within seven (7) calendar days after the submittal of the CPM schedule update, submit to BATA the Contractor's proposed schedule revisions to recover the lost time. As part of this submittal, the Contractor shall provide a written narrative for each revision made to recover the lost time. The narrative shall explain the Contractor's proposed methodology, basis and assumptions made in the recovery of lost time. If the revisions include sequence changes, the Contractor shall provide a schedule diagram comparing the original sequence to the revised sequence of work. The recovery schedule shall be prepared as a modification to the Current CPM Schedule that incorporates proposed revisions to recover lost time.

The proposed revisions in a Recovery Schedule shall not be incorporated into any schedule update until they have been accepted by BATA.

If the Contractor's revisions are not accepted by BATA, the Contractor shall follow the procedures in **Section 23.9 of the Special Conditions**.

Upon request by BATA, Contractor shall provide the subcontractor certifications for revisions affecting any Subcontractors.

23.11 Time Impact Evaluation for Change Orders and Other Delays

When the Contractor becomes aware of circumstances considered to be a change to the contract (including change notices and force account directives), the Contractor shall prepare and submit a Time Impact Evaluation (TIE) which includes both a written narrative and a schedule diagram depicting how the changed work affects other schedule activities. The schedule diagram shall show how the Contractor proposes to incorporate the changed work in the current schedule and how it impacts the critical path of the Current CPM Schedule. The Contractor is also responsible for requesting time extensions based on the TIE's impact on the critical path. The diagram must be tied to the main sequence of schedule activities to enable BATA to evaluate the impact of the changed work to the scheduled critical path. The Contractor shall submit the TIE within fourteen (14) calendar days of recognition of such change.

The Contractor shall be responsible for all costs associated with the preparation of TIE's, and the process of incorporating them into the current schedule update. The Contractor shall provide BATA with three (3) copies of each TIE.

Once accepted by BATA, the TIE shall be incorporated into the next CPM schedule update. If the Contractor and BATA are unable to reach agreement, the Contractor shall incorporate changes in accordance with BATA's direction.

If the Contractor does not submit a TIE, for a specific issue, by the stated deadline and in accordance with the requirements of this section, it is mutually agreed that the Contractor does not require a time extension for said issue and that Contractor waives any rights to claim a time extension based on said issue in the future.

23.12 Time Extensions

The Contractor is solely responsible for requesting a time extension for any change, delay, or disruption that, in the opinion of the Contractor, impacts the critical path of the Current CPM Schedule. Time extension will be granted only to the extent that the change, delay, or disruption that impacts the critical path is beyond the control and without fault or negligence of the Contractor or any subcontractor.

The Contractor may be entitled to a compensable time extension for Owner-caused delays that are not concurrent with Contractor-caused or other excusable but non-compensable delays (i.e., weather). The Contractor may be entitled to a non-compensable time extension for Owner-caused delays that are concurrent with Contractor-caused or other excusable but non-compensable delays.

In the event that an Owner-caused delay impacts a contract milestone or the contract completion date, the Contractor shall provide a mitigation plan, including a schedule diagram, which explains how the impact can be mitigated. The Contractor shall also include a detailed cost breakdown of the labor, equipment and material the Contractor would expend to mitigate Owner-caused delay. The Contractor shall submit its mitigation plan to BATA within 7 calendar days from the date of discovery of said impact. The Contractor is responsible for the cost to prepare the mitigation plan.

Failure to request time extension, provide TIE, or provide the required mitigation plan within the time specified in this **Section SC-23**, will result in the Contractor waiving its right to both the time extension and the recovery of costs associated with mitigating the delay.

BATA will not consider any time extension request unless the requirements of this **Section SC-23** are met. BATA will not be responsible or liable to the Contractor for any constructive acceleration due to the failure of the Contractor to comply with the submission requirements and justification requirements of this contract for time extension requests.

Failure of the Contractor to perform in accordance with the Current CPM Schedule shall not be excused by submittal of time extension requests.

23.14 Daily Contractor Construction Report

Contractor shall submit to BATA a daily construction activity report for each working day, including weekends and holidays when work occurred. Each daily construction report shall be submitted no later than the day following the workday represented by the report. The following information shall be included in the report:

1. Project name and Contract/Project number
2. Contractor’s name and address

3. Weather, temperature, and any unusual site conditions
4. Brief description of day's activities (work activities shall be referenced by activity number and activity description in the CPM schedule)
5. Labor quantities for Contractor and subcontractors
6. Equipment and other tools utilized by Contractor and subcontractors
7. Unusual occurrences, problems and accidents, if any

23.15 Payment Provisions

In the event that the contract contains a separate pay item for a "Progress Schedule", that pay item will be administered as follows: 25% of the pay item upon acceptance by BATA of an approved baseline schedule as described in **Section 23.4** herein. The remainder of the pay item will be invoiced in equal installments by the Contractor computed by dividing the remainder of the pay item amount by the number of progress payment periods from BATA's acceptance date of the baseline CPM schedule or sixty (60) days from the first charged day, whichever is earlier, through contract completion. The final installment will be invoiced when final acceptance of the work occurs. There will be no separate payment provided for all other schedule submittals required in **Special Conditions, SC-23**, other than for the baseline CPM schedule and the CPM schedule update.

If the Contractor fails to submit the baseline CPM schedule within sixty (60) calendar days from Notice of Award, 25% of the pay item for "Progress Schedule" shall be forfeited. The pay item for any progress payment period for which the Contractor does not have an accepted schedule shall not be paid by BATA. No payment for a missed period shall be made retroactively by BATA. Forfeiture of any payments shall not relieve the Contractor from the responsibility to submit the CPM schedule update and all other requirements of this section including weekly schedule reports, daily Contractor construction reports, time impact evaluations and recovery schedules throughout the term of the contract.

In addition to the amount retained by BATA from each progress payment, as provided for in **General Conditions, GC-59**, BATA may withhold additional amounts not to exceed 10% of the total progress payment for Contractor's failure to meet the requirements of **Special Conditions, SC-23**. BATA will pay the Contractor the amount withheld once BATA has determined that the Contractor has satisfactorily complied with the requirements of **Special Conditions, SC-23.**

23.16 Cost Breakdown

Determine quantities required to complete work. Submit the quantities as part of the cost breakdown. The sum of the amounts for the units of work listed in the cost breakdown must equal the contract lump sum price bid for the work. Include overhead and profit for each unit of work listed in the cost breakdown. If mobilization is a bid item, include bond premium, temporary construction facilities, and material plants into the mobilization bid item, otherwise, include in each unit of work listed in the cost breakdown. Do not include costs for traffic control system in the cost breakdown.

The cost breakdown may be used to determine partial payment and to calculate payment adjustments for additional costs incurred due to a change order. If a change order increases or decreases the quantities, payment adjustment may be determined as shown elsewhere in these Special Provisions.

The cost breakdown must include material description, type, size, and installation method.

SC-24 Water Pollution Control Plan (WPCP)

Requirements for Water Pollution Control Plan (WPCP) and its implementation shall conform to the terms and conditions specified within S**ection 10 Construction Details**.

SC-25 Surface Mining and Reclamation Act

Attention is directed to the Surface Mining and Reclamation Act of 1975, commencing in Public Resources Code, Mining and Geology, Section 2710, which establishes regulations pertinent to surface mining operations.

Material from mining operations furnished for this project shall only come from permitted sites in compliance with the Surface Mining and Reclamation Act of 1975.

SC-26 Laboratory

When a reference is made in the specifications to the "Laboratory," the reference shall mean Division of Engineering Services - Materials Engineering and Testing Services and Division of Engineering Services - Geotechnical Services of the Department of Transportation, or established laboratories of the various Districts of the Department, or other laboratories authorized by the State to test materials and work involved in the contract. When a reference is made in the specifications to the "Transportation Laboratory," the reference shall mean Caltrans Division of Engineering Services - Materials Engineering and Testing Services and Division of Engineering Services - Geotechnical Services, located at 5900 Folsom Boulevard, Sacramento, CA 95819, Telephone (916) 227-7000.

SC-27 (Not Used)

SC-28 Partnering

BATA will promote the formation of a Partnering relationship with Contractor in order to effectively complete the contract to the benefit of both parties. The purpose of this relationship will be to maintain cooperative communication and mutually resolve conflicts at the lowest possible management level.

Contractor may request the formation of such a Partnering relationship by submitting a request in writing to the Engineer after Notice of Award. If Contractor's request for Partnering is approved by the Engineer, scheduling of a Partnering Workshop, selecting the Partnering Facilitator and workshop site, and other administrative details shall be as agreed to by both parties.

The costs involved in providing a facilitator and a workshop site will be borne equally by BATA and Contractor. Contractor shall pay all compensation for the wages and expenses of the facilitator and of the expenses for obtaining the workshop site. BATA's share of such costs will be reimbursed to Contractor in a change order written by the Engineer. Markups will not be added. All other costs associated with the "Partnering" relationship will be borne separately by the party incurring the costs.

The establishment of a Partnering relationship will not change or modify the terms and conditions of the contract and will not relieve either party of the legal requirements of the contract.

SC-29 Bridge Tolls

Toll-free passage on the San Francisco-Oakland Bay Bridge will be granted only for cars, trucks and special construction equipment which are clearly marked on the exterior with the Contractor's identification and which are being operated by the Contractor exclusively for the project, and which are used for the purpose of transporting materials and workers directly to and from the project site.

The Contractor shall make application to the Engineer in advance for toll-free passage. The Contractor will be held accountable for the proper use of passes issued, and upon completion of the work, shall return unused passes to the Engineer.

Attention is directed to Section 23302, "Evasion of Toll," of the Vehicle Code.

SC-30 Value Engineering Change Proposals (VECP)

Contractor is encouraged to develop, prepare, and submit value Engineering change proposals (VECPs) voluntarily. This Article applies to those Value Engineering Change Proposals that are originated, initiated and developed by Contractor to change the drawings, specifications or other requirements of the Contract. In order to be accepted under this Article, each VECP shall:

1. Be identified by Contractor at the time of submittal to BATA as submitted pursuant to this Article; and
2. Require a change to the Contract; and
3. Decrease the Contract Price; and
4. Result in a net savings to BATA of a minimum of $50,000, or result in a reduction in the overall schedule of thirty (30) calendar days minimum; and
5. Maintain the items' required functions such as service life, reliability, economy of operation, ease of maintenance and necessary standardized features and appearance, and not require an unacceptable extension of Contract time. Provided, that it does not involve a change in deliverable end item quantities only; or
6. To the contract type only.

30.1 Content of VECP

Any VECP Contractor submits shall be in sufficient detail to clearly define the proposed change including:

1. A description of the difference between the existing and the proposed Contract requirements, and the comparative advantages and disadvantages of each;
2. Contract requirements recommended to be changed if the proposal is accepted;
3. A detailed estimate of the amount of the net savings that will result from acceptance of the proposal;

4. A prediction of any effects the proposed change would have on costs of maintenance and operation;
5. A description and estimate of costs BATA may incur in implementing the VECP, such as test and evaluation and operating and support costs; and
6. A statement of the time by which the proposal must be accepted so as to obtain the maximum price reduction, noting any effect upon the Contract completion time.

30.2 Acceptance of VECP

BATA may accept or reject part or all of any VECP by giving Contractor written notice thereof. Until such notice is issued, Contractor shall remain obligated to perform in accordance with the terms of the Contract. VECPs will be processed expeditiously; however, BATA shall not be liable for any delay in acting upon any proposal submitted pursuant to this Article. The decision of BATA as to acceptance of any such proposal shall be final. The denial of any VECP shall not provide Contractor with any basis for claim for damages or delay, nor for release from contractual responsibilities. BATA's approval of a value Engineering proposal shall not entitle Contractor to additional compensation or time if the work incorporating the proposal is defective, more expensive, or takes more time.

30.3 VECP Contract Price Adjustment

When a VECP submitted pursuant to this Article is accepted:

1. An equitable adjustment in the Contract price and in any other affected provisions of the Contract shall be made and the Contract modified in accordance with this Article, or other applicable articles of the Contract.
2. The net savings resulting from the change shall be shared between Contractor and BATA on the basis of 40 percent for Contractor and 60 percent for BATA. Net savings shall be determined by deducting from the estimated gross savings, Contractor's costs of developing and implementing the proposal, including any amount attributable to a subcontractor, and the estimated amount of increased costs to BATA resulting from the change, such as review implementation, inspection, related items and BATA-furnished property. Estimated gross savings shall include Contractor's labor, material, equipment, overhead profit and bond. *Gross saving shall be computed by comparing the cost of performing the work under the existing contract with the cost of performing the work as proposed. All costs shall be determined in accordance with Section GC-60 of these Contract Documents.* The Contract price shall be reduced by the sum of BATA's costs and BATA's share of the net savings.
3. Contractor is entitled to share in instant contract savings only, to the full extent provided for in this Article. For purposes of sharing under this Article, the term instant contract shall not include any supplemental agreements to or other modifications of the Contract, executed subsequent to acceptance of the particular VECP, by which BATA increases the quantity of any item or adds any item.

30.4 Inclusion in Subcontracts

Contractor shall include value Engineering arrangements in any subcontract which, in Contractor's judgment, appears to offer sufficient value Engineering potential.

30.5 Identical VECP

A VECP identical to one submitted under any other contract, by this or by any other Contractor, may also be submitted under the Contract, provided that the proposal originated with such Contractor and not with BATA.

30.6 Restrictions

Contractor may restrict BATA's right to use any VECP data by marking it with the following statement:

> "This data, furnished pursuant to the Value Engineering article of the Contract, shall not be duplicated, used or disclosed in whole or in part, for any purpose except to evaluate the VECP, unless the proposal is accepted by BATA. The restriction does not limit BATA's right to use information contained in this data if it is or has been obtained, or is otherwise available, from Contractor or from another source, without limitations. When this proposal is accepted by BATA, BATA shall have the right to duplicate, use and disclose any data in any manner and for any purpose whatsoever, and have others do so whether under this or any Contract."

Contractor shall have no right to share any future savings derived from incorporation of the VECP in future BATA Contracts.

SC-31 Alternative Methods of Construction

Whenever the plans or specifications provide that more than one specified method of construction or more than one specified type of material or construction equipment may be used to perform portions of the work and leave the selection of the method of construction or the type of material or equipment to be used up to Contractor, it is understood that BATA does not guarantee that every specified method of construction or type of material or equipment can be used successfully throughout all or any part of any project. The Contractor's attention is directed to Section 2-2 "General Description of Work" of these Special Provisions.

It shall be Contractor's responsibility to select and use the alternative or alternatives, which will satisfactorily perform the work under the conditions encountered. In the event some of the alternatives are not feasible or it is necessary to use more than one of the alternatives on any project, full compensation for any additional cost involved shall be considered as included in the contract price paid for the item of work involved and no additional compensation will be allowed therefore.

SC-32 Highway Construction Equipment

Pursuant to the authority contained in Section 591 of the Vehicle Code, BATA has determined that, within such areas as are within the limits of the project and are open to public traffic, the following requirements of the Vehicle Code will apply: the lighting requirements in Section 25803; the brake requirements in Chapter 3, Division 12; the splash apron requirements

in Section 27600; and, when operated on completed or existing treated base, surfacing, pavement or structures, except as otherwise provided in **SC-41, Weight Limitations**.

SC-33 Quality Assurance Program

Contractor shall at his/her own expense arrange, submit for BATA's approval and implement a Quality Assurance Program consistent with the requirements of Section 10 Construction details.

SC-34 Conformity With Contract Documents and Allowable Deviations

Work and materials shall conform to the lines, grades, typical cross sections, dimensions and material requirements, including tolerances, shown on the plans or indicated in the specifications. Although measurement, sampling and testing may be considered evidence as to conformity, the Engineer shall be the sole judge as to whether the work or materials deviate from the plans and specifications, and the Engineer's decision as to any allowable deviations there from shall be final.

SC-35 Use Of Materials Found On The Work

Unless designated as selected material as provided in Section 19-2.07, "Selected Material" of the State Standard Specifications, Contractor, with the approval of the Engineer, may use in the proposed construction such stone, gravel, sand or other material suitable in the opinion of the Engineer as may be found in excavation. Contractor will be paid for the excavation of those materials at the contract price for the excavation, but Contractor shall replace at Contractor's expense with other suitable material all of that portion of the material so removed and used which was contemplated for use in the work, except that Contractor need not replace, at Contractor's expense, any material obtained from structure excavation used as structure backfill. No charge for materials so used will be made against Contractor. Contractor shall not excavate or remove any material from within the highway location that is not within the excavation, as indicated by the slope and grade lines, without written authorization from the Engineer.

SC-36 Certificates of Compliance

Reference is made to GC-49, Certificates of Compliance Testing. GC-49 is deleted in its entirety and replaced with Section 6, Control of Materials of the Standard Specifications.

Section 6-3.01 "General" of the Standard Specifications is amended to include the following:
BATA will pay for initial tests. Monies will be deducted from the Contractor for any subsequent tests or re-tests.

SC-37 Environmental Coordination and Cooperation

37.1 Not Used

37.2 Mitigation Measures

Department has approved a Categorical Exception/Categorical Exemption for this project. Contractor is advised that compliance with the provisions of this document is a requirement of the Contract. Contractor shall comply with the mitigation measures contained in said document:

Noise Measures

During all site preparation, grading and construction, Contractor shall maintain and operate all equipment consistent with the manufacturer's specifications. Construction equipment will include available noise suppression devices and properly maintained mufflers.

During all site preparation, and construction, Contract shall site fixed and mobile equipment to minimize noise emissions outside the state right-of-way in the vicinity of sensitive land uses.

During all site preparation, and construction, Contractor shall minimize the staging of construction equipment and unnecessary idling of equipment in the vicinity of sensitive land uses.

37.3 Migratory Nesting Birds

The Contractor's attention is directed to the nesting season of Cliff Swallows, Northern Rough-wing Swallows, White-throated Swifts, other migratory birds (including raptors), and roosting bats. The nesting season generally is from February 15th to September 1st. It is against the law to harm these birds as per the Migratory Bird Treaty Act and California Fish and Game Code. It is the Contractor's responsibility to ensure that these birds are not allowed to nest on structures in the construction area or in vegetation that may be impacted by construction so that the birds and nestlings are not harmed.

Prior to and during construction, the Contractor shall inspect all vegetation, grounds, and structures etc. that may be impacted by construction every two (2) days, and will be required to remove nests that are less than half built and maintain and submit a weekly log documenting the time, date, condition and any actions taken. The Contractor shall install and maintain all nesting exclusion devices throughout the breeding season, or until work in the area makes the devices unnecessary. The Contractor shall remove all exclusion devices when all of the work is complete.

The Contractor shall be responsible for the removal of new and partially built nests before the nests are halfway completed. Nests could be removed with a long pole or could be hosed off with water, or as approved by the Engineer. These methods are to be directed at the partially built nests only and not at the birds. No birds, nests with eggs, or nests with hatchlings will be disturbed.

If BATA or their representative discovers any major problems during the life of the contract, the Contractor will be notified and expected to correct the problem within twenty-four (24) hours. The Contractor will be responsible for the maintenance, repair or replacement of the nesting exclusion devices until all of the work is complete.

If nest completions go undetected or nests are completed and eggs are laid, any work around these nests that could harm the birds or their now active nests must be stopped until consultation (as described below) has been performed.

The Contractor shall be responsible for any work stoppages and shall be expected to complete all work as specified in Section SC-4, "Time For Performance" and Section SC-5, "Liquidated Damages," of these Special Conditions.

Should an active nest be present or establish in the project area, all work which might impact that nest(s) will be halted until the Contractor coordinates with BATA, California Department of Fish and Game (CDFG), and a CDFG approved ornithologist to develop alternatives to avoid take of the nest. No additional time or compensation will be allowed therefore.

37.4 Payment

Full compensation for work involved in complying with the requirements herein SC-37, Environmental Coordination and Cooperation, shall be considered as included in the contract prices paid for the various items of work involved and no additional compensation will be allowed therefore.

SC-38 Bird Protection

General

This work includes protecting migratory and nongame birds, their occupied nests, and their eggs. Nesting or attempted nesting by migratory and nongame birds is anticipated to occur but is not limited to February 1st through August 31st.

The Contractor must coordinate performance of pre-construction surveys with the Engineer a minimum of 10 working days and a maximum of 15 working days prior to any vegetation clearing or bridge removal.

Quality Assurance

Regulatory requirements

The Federal Migratory Bird Treaty Act (16 USC §703-711.), 50 CFR 10, and Fish & Game Code §3503, §3513, and §3800, protect migratory and nongame birds, their occupied nests, and their eggs. The Federal Endangered Species Act of 1973 (16 USC §1531,§1543) and California Endangered Species Act (Fish & Game Code §2050-§2115.5) prohibit the take of listed species and protect occupied and unoccupied nests of threatened and endangered bird species.

The Bald Eagle Protection Act (16 USC §668) prohibits the destruction of bald and golden eagles occupied and unoccupied nests.

Permits are included in the Project Information handout.

Construction

When migratory or nongame bird nests are discovered which may be adversely affected by construction activity, or when a bird is found injured or killed as a result of construction activity, immediately stop work within 30 meters of the nest or bird and notify the Engineer. Work must not resume until the Engineer provides written notification that work may resume at that location.

When ordered by the Engineer, use exclusion devices, nesting prevention measures or remove and dispose of partially constructed and unoccupied nests of migratory or nongame birds on a regular basis to prevent their occupation. Nest removal activities must not result in depositing into or allowing materials to enter waters of this state.

Measurement and Payment

Exclusion devices, nesting prevention measures and nest removal that are ordered by the Engineer will be paid for as extra work as specified in Section 4-1.03D, "Extra Work," of the Standard Specifications. A delay to the controlling operation due to migratory or nongame birds or their nests will be considered a temporary suspension of work under Section 8-1.05, "Temporary Suspension of Work," of the Standard Specifications. Adjustments will be made for delays that the Engineer determines are not due to the Contractor's failure to perform the provision of the contract in the same manner as for suspensions due to unsuitable weather in Section 8-1.05.

SC-39 Final Inspection and Acceptance

Refer to **GC-55.1, Final Inspection and Acceptance of all the Work**, This paragraph is amended to include the following:

There will be no portions of the work for which the Contractor may be relieved of the duty of maintenance and protection as provided in the above paragraph.

SC-40 Dust Control

This work shall consist of applying water, dust palliative, or both, etc. for the alleviation or prevention of dust nuisance.

Dust resulting from Contractor’s work either inside or outside the right-of-way, shall be controlled in conformance with the General Conditions of this contract.

It is also understood that this special condition will not prevent Contractor from applying water or dust palliative for Contractor's convenience if so desired. Water shall be applied as provided in Section 17, "Watering," of the Standard Specifications and dust palliative shall conform to and be applied as provided in Section 18, "Dust Palliative" " of the Standard Specifications.

The Contractor shall be required to meet or exceed all air quality standards as applicable by law.

No separate payment will be made for work performed or materials used to control dust. Payment for conforming to the requirements of this section shall be considered as full compensation for furnishing all labor, materials, tools, equipment, and incidentals, and for performing all work involved in completing the requirements of this section, and shall be considered as included in the prices paid for the various contract items of work. No additional compensation will be allowed therefore.

SC-41 Weight Limitations

Unless expressly permitted, construction equipment or vehicles of any kind which, laden or unladen, exceed the maximum weight limitations set forth in Division 15 of the Vehicle Code, shall not be operated over completed or existing treated bases, surfacing, pavement or structures in any areas within the limits of the project except as follows in this section.

After application of the curing seal, no traffic or Contractor's equipment will be permitted on cement treated base or lean concrete base for a period of 72 hours. After 72 hours, traffic and equipment operated on the base shall be limited to that used in paving operations and placing additional layers of cement treated base. No traffic or Contractor's equipment will be permitted on treated permeable base except for that equipment required to place the permeable base and the subsequent layer of pavement. Trucks used to haul treated base, Portland cement concrete, or asphalt concrete shall enter onto the base to dump at the nearest practical entry point ahead of spreading equipment. Empty haul trucks shall exit from the base at the nearest practical exit point. Entry and exit points shall not be more than 300m ahead of spreading equipment except in locations where specifications prohibit operation of trucks outside the area occupied by the base or where steep slopes or other conditions preclude safe operation of hauling equipment. In those locations, entry and exit points shall be established at the nearest point ahead of spreading equipment permitted by specifications and allowing safe operation of hauling equipment. Damage to curing seal or base shall be repaired promptly by the Contractor, at Contractor's expense, as directed by the Engineer.

Within the limits of the project and subject to the control of the Engineer, and provided that Contractor, at Contractor's expense, shall provide such protective measures as are deemed necessary by the Engineer and shall repair any damage caused by the operations, Contractor will be permitted to:

1. Make transverse crossings of those portions of an existing public road or street that are within the highway right of way, with construction equipment which exceeds the size or weight limitations set forth in Division 15 of the Vehicle Code.

2. Make transverse crossings of treated bases, surfacing or pavement that are under construction or which have been completed, with construction equipment that exceeds the size or weight limitations set forth in Division 15 of the Vehicle Code.
3. Cross bridge structures that are not open to public traffic and which are designed for HS20-44 Live Loading (culverts and pipes excluded), with construction equipment which exceeds the size or weight limitations set forth in Division 15 of the Vehicle Code, but not exceeding the load limitations hereinafter specified, provided that Contractor furnishes to the Engineer the dimensions and maximum axle loadings of equipment proposed for use on bridge structures:
   a. The maximum loading on bridge structures due to pneumatic-tired truck and trailer combinations shall not exceed (1) 12 700 kg for single axles, (2) 21 700 kg for tandem axles, nor (3) 27 200 kg total gross load for single vehicles or 50 000 kg total gross load for truck and trailer or semi-trailer combinations.
   b. The loading on bridge structures due to 2 and 3 axle pneumatic-tired earthmovers shall not exceed that shown in the following table.

ALLOWABLE CONSTRUCTION LOADING ON BRIDGES FOR 2 AND 3 AXLE EARTHMOVERS	
Spacing of Bridge Girders (center to center in meters)	**Maximum Axle Loading (in kilograms)**
1.2	12,700
1.5	13,100
1.8	13,600
2.1	14,500
2.4	15,400
2.7	16,700
3.0 and over	18,000
Minimum Axle Spacing For 3-axle earthmovers: Axles 1 to 2 = 2.4 m Axles 2 to 3 = 6.1 m For 2-axle earthmovers: Axles 1 to 2 = 6.1 m	

Move equipment within the limits of the project over completed or existing base, surfacing, pavement and structures, whether or not open to the public, in accordance with the limitations and conditions in the "Permit Policy" of the Department of Transportation.

Within the limits of the project and subject to the condition that Contractor shall repair, at Contractor's expense, any damage caused thereby, Contractor will be permitted to cross culverts and pipes with construction equipment which exceeds the size or weight limitations set forth in Division 15 of the Vehicle Code in accordance with the conditions set forth on the plans. If the conditions are not set forth on the plans, the provisions in the first paragraph in this Special Condition will apply.

Should Contractor desire to increase the load carrying capacity of a structure or structures that are to be constructed as a part of the contract, in order to facilitate Contractor's own operations, Contractor may request the Engineer to consider redesigning the structure or structures. Proposals by Contractor to increase the load carrying capacity of structures above 59,000kg per single axle or pair of axles less than 2.4m apart, or above 149,000kg total gross

vehicle weight, will not be approved. The request shall include a description of the structure or structures involved and a detailed description of the overloads to be carried, the date the revised plans would be required, and a statement that Contractor agrees to pay all costs involved in the strengthening of the structure or structures, including the cost of revised plans, and further that Contractor agrees that no extension of time will be allowed by reason of any delay to the work which may be due to the alteration of the structure or structures. If the Engineer determines that strengthening the structure or structures will be permitted, the Engineer will inform Contractor of the estimated cost of the alterations, including Engineering, and the date that revised plans could be furnished. If the cost and date are satisfactory to Contractor, the Engineer will prepare a change order providing for the agreed upon alterations.

SC-42 Public Convenience and Safety

42.1 Public Convenience

This Section SC-42.1 defines Contractor's responsibility with regard to convenience of the public and public traffic in connection with Contractor's operations.

Attention is directed **GC-38, Public Convenience and Safety** and **Section 10 Construction, Details** for provisions relating to the passage of traffic around the work over detours or lane closures.

Attention is directed to **SC-42.2, Public Convenience and Safety**, for provisions relating to the Contractor's responsibility for the safety of the public. The provisions in **SC-42.2** are in addition to the provisions in this **SC-42.1** and Contractor will not be relieved of the responsibilities as set forth in **SC-42.2** by reason of conformance with any of the provisions in this **SC-42.1**.

Attention is directed to **SC-43**, **Flagging** (not used) and **Section 12, "Construction Area Traffic Control Devices" of the Standard Specifications** for provisions concerning flagging and traffic handling equipment and devices used in carrying out the provisions in this **SC-42.1** and **SC-42.2**.

In the event of a suspension of the work, attention is directed to **GC-69, Suspension of Work**.

The Contractor shall so conduct operations as to offer the least possible obstruction and inconvenience to the public and shall have under construction no greater length or amount of work than can be prosecuted properly with due regard to the rights of the public.

Unless otherwise provided in the Special Provisions, all public traffic shall be permitted to pass through the work with as little inconvenience and delay as possible. Where possible, public traffic shall be routed on new or existing paved surfaces.

Spillage resulting from hauling operations along or across any public traveled way shall be removed immediately by the Contractor at the Contractor's expense.

Existing traffic signals and highway lighting shall be kept in operation for the benefit of the traveling public during progress of the work, and other forces will continue routine maintenance of existing systems.

Construction operations shall be conducted in such a manner as to cause as little inconvenience as possible to abutting property owners.

Convenient access to driveways, houses, and buildings along the line of the work shall be maintained and temporary approaches to crossings or intersecting highways shall be provided and kept in good condition. When the abutting property owner's access across the right of way line is to be eliminated, or to be replaced under the contract by other access facilities, the existing access shall not be closed until the replacement access facilities are usable.

The Contractor may be required to cover certain signs that regulate or direct public traffic to roadways that are not open to traffic. The Engineer will determine which signs shall be covered. Except as otherwise provided for construction area signs in Section 12, Construction Area Traffic Control Devices, of the Standard Specifications, furnishing, installing and removing covers will be paid for as extra work as provided in **GC-65, Change Requests and Change Notices**, and **GC-66, Change Orders**.

Roadway excavation and the construction of embankments shall be conducted in such a manner as to provide a reasonably smooth and even surface satisfactory for use by public traffic at all times; sufficient fill at culverts and bridges to permit traffic to cross shall be placed in advance of other grading operations; and if ordered by the Engineer roadway cuts shall be excavated in lifts and embankments constructed part width at a time, construction being alternated from one side to the other and traffic routed over the side opposite the one under construction. Culvert installation or culvert construction shall be conducted on but one-half the width of the traveled way at a time, and that portion of the traveled way being used by public traffic shall be kept open and unobstructed until the opposite side of the traveled way is ready for use by traffic.

Upon completion of rough grading at the grading plane, or placing any subsequent layer thereon, the surface of the roadbed shall be brought to a smooth, even condition free of humps and depressions, satisfactory for the use of public traffic.

After the surface of the roadbed has been brought to a smooth and even condition for the passage of public traffic as above provided, any work ordered by the Engineer for the accommodation of public traffic prior to commencing subgrade operations will be paid for as extra work as provided in **GC-65, Change Requests and Change Notices**, and **GC-66, Change Orders**. After subgrade preparation for a specified layer of material has been completed, Contractor shall, at Contractor's expense, repair any damage to the roadbed or completed subgrade, including damage caused by Contractor's operations or use by public traffic.

While subgrade and paving operations are underway, public traffic shall be permitted to use the shoulders and, if half-width paving methods are used, shall also be permitted to use the side of the roadbed opposite the one under construction. When sufficient width is available, a passageway wide enough to accommodate at least two (2) lanes of traffic shall be kept open at

locations where subgrade and paving operations are in active progress. Any shaping of shoulders or reshaping of subgrade necessary for the accommodation of public traffic thereon during subgrade preparation and paving operations will be paid for as extra work as provided in **GC-65, Change Requests and Change Notices**, and **GC-66, Change Order**s.

When ordered by the Engineer, Contractor shall furnish a pilot car and driver and flaggers for the purpose of expediting the passage of public traffic through the work under one-way controls, and the cost thereof will be paid for as extra work as provided in **GC-65, Change Requests and Change Notices**, and **GC-66, Change Order**s, except that the cost of flaggers furnished for this purpose will be paid for as provided in **SC-43, Flagging (not used)**. At locations where traffic is being routed through construction under one-way controls and when ordered by the Engineer, the movement of Contractor's equipment from one portion of the work to another shall be governed in accordance with the one-way controls.

Water or dust palliative shall be applied if ordered by the Engineer for the alleviation or prevention of dust nuisance as provided in **SC-40, Dust Control**.

In order to expedite the passage of public traffic through or around the work and where ordered by the Engineer, Contractor shall install signs, lights, flares, temporary railing (Type K), barricades and other facilities for the sole convenience and direction of public traffic. Also where directed by the Engineer, Contractor shall furnish competent flaggers whose sole duties shall consist of directing the movement of public traffic through or around the work. The cost of furnishing and installing the signs, lights, flares, temporary railing (Type K), barricades, and other facilities, not to be paid for as separate contract items, will be paid for as extra work as provided in **GC-65, Change Requests and Change Notices**, and **GC-66, Change Orders**.

The cost of furnishing flaggers for the sole convenience and direction of public traffic will be paid for as provided in **SC-43, Flagging (not used)**.

Contractor will be required to pay the cost of replacing or repairing all facilities installed under extra work for the convenience or direction or warning of public traffic that are lost while in Contractor's custody, or are damaged by reason of Contractor's operations to such an extent as to require replacement or repair, and deductions from any moneys due or to become due Contractor will be made to cover the cost.

Whenever a section of surfacing, pavement or the deck of a structure has been completed, Contractor shall open it to use by public traffic if the Engineer so orders or may open it to use by public traffic if the Engineer so consents. In either case Contractor will not be allowed any compensation due to any delay, hindrance or inconvenience to Contractor's operations caused by public traffic, but will thereupon be relieved of responsibility for damage to completed permanent facilities caused by public traffic, within the limits of that use. Contractor will not be relieved of any other responsibility under the contract nor will Contractor be relieved of cleanup and finishing operations.

Except as otherwise provided in this **SC-42.1** or otherwise in the special conditions, full compensation for conforming to the provisions in this **SC-42.1** shall be considered as included in the prices paid for the various contract items of work and no additional compensation will be

allowed therefore.

42.2 Public Safety

It is Contractor's responsibility to provide for the safety of traffic and the public during construction.

Attention is directed to **GC-45, Protection and Restoration of Property** and **SC-1, Indemnification**.

Attention is directed to **SC-42.1, Public Convenience**, for provisions relating to Contractor's responsibility for providing for the convenience of the public in connection with Contractor's operations.

Attention is directed to **Section 12, Construction Area Traffic Control Devices, of the Standard Specifications**, for provisions concerning flagging and traffic-handling equipment and devices used in carrying out the provisions of **SC-42.1** and **SC-42.2**.

Whenever Contractor's operations create a condition hazardous to traffic or to the public, Contractor shall, at Contractor's expense and without cost to BATA, furnish, erect and maintain those fences, temporary railing (Type K), barricades, lights, signs and other devices and take such other protective measures that are necessary to prevent accidents or damage or injury to the public.

Contractor shall install temporary railing (Type K) between a lane open to public traffic and an excavation, obstacle, or storage area when the following conditions exist:

1. Excavations**.** The near edge of the excavation is 3.6m or less from the edge of the lane, except:
   a. Excavations covered with sheet steel or concrete covers of adequate thickness to prevent accidental entry by traffic or the public.
   b. Excavations less than 0.3m deep.
   c. Trenches less than 0.3m wide for irrigation pipe or electrical conduit, or excavations less than 0.3m in diameter.
   d. Excavations parallel to the lane for the purpose of pavement widening or reconstruction.
   e. Excavations in side slopes, where the slope is steeper than 1:4 (vertical:horizontal).
   f. Excavations protected by existing barrier or railing.
2. Temporarily Unprotected Permanent Obstacles**.** The work includes the installation of a fixed obstacle together with a protective system, such as a sign structure together with protective railing, and Contractor elects to install the obstacle prior to installing the protective system; or Contractor, for Contractor's convenience and with permission of the Engineer, removes a portion of an existing protective railing at an obstacle and does not replace such railing complete in place during the same day.
3. Storage Areas**.** Material or equipment is stored within 3.6m of the lane and the storage is not otherwise prohibited by the provisions of the Standard Specifications and these Special Provisions.

The approach end of temporary railing (Type K) installed in conformance with the provisions in this section and shall be offset a minimum of 4.6m from the edge of the traffic lane open to public traffic. The temporary railing shall be installed on a skew toward the edge of the traffic lane of not more than 0.3m transversely to 3m longitudinally with respect to the edge of the traffic lane. If the 4.6m minimum offset cannot be achieved, the temporary railing shall be installed on the 10 to 1 skew to obtain the maximum available offset between the approach end of the railing and the edge of the traffic lane, and an array of temporary crash cushion modules shall be installed at the approach end of the temporary railing.

Temporary railing (Type K) shall conform to the provisions in Section 12-3.08, Temporary Railing (Type K), of the Standard Specifications. Temporary railing (Type K), conforming to the details shown on 1995 Standard Plan T3 or 1992 Standard Plan T3, may be used. Temporary railing (Type K) fabricated prior to January 1, 1993, and conforming to 1988 Standard Plan B11-30 may be used, provided the fabrication date is printed on the required Certificate of Compliance.

The fourteenth paragraph of Section 12-3.08, Temporary Railing (Type K), of the Standard Specifications is amended to read: Each rail unit placed within 3m of a traffic lane shall have a reflector installed on top of the rail as directed by the Engineer. A Type P marker panel shall also be installed at each end of railing installed adjacent to a two-lane, two-way highway and at the end facing traffic of railing installed adjacent to a one-way roadbed. If the railing is placed on a skew, the marker shall be installed at the end of the skew nearest the traveled way. Type P marker panels shall conform to the provisions in Section 82, "Markers and Delineators," except that the Contractor shall furnish the marker panels.

Except for installing, maintaining and removing traffic control devices, whenever work is performed or equipment is operated in the following work areas Contractor shall close the adjacent traffic lane unless otherwise provided in the Standard Specifications and these contract documents:

1. Approach speed of public traffic (Posted Limit over 72 KPH)- Work areas can be within 1.8m of a traffic lane but not on a traffic lane
2. Approach speed of public traffic (Posted Limit between 56 and 72 KPH)- Work areas can be within 0.9 m of a traffic lane but not on a traffic lane (Kilometers Per Hour) 8a

For the requirements of this section, Temporary Railing (Type K) shall not be deemed as Construction Area Traffic Control Devices, as defined in Section 12 of the Standard Specifications.

The lane closure provisions of this section shall not apply if the work area is protected by permanent or temporary railing or barrier.

When traffic cones or delineators are used to delineate a temporary edge of traffic lane, the line of cones or delineators shall be considered to be the edge of traffic lane, however, Contractor shall not reduce the width of an existing lane to less than 3m without written approval from the Engineer.

When work is not in progress on a trench or other excavation that required closure of an adjacent lane, the traffic cones or portable delineators used for the lane closure shall be placed

off of and adjacent to the edge of the traveled way. The spacing of the cones or delineators shall be not more than the spacing used for the lane closure.

Suspended loads or equipment shall not be moved nor positioned over public traffic or pedestrians.

Full compensation for conforming to the provisions in this section, Public Safety, including furnishing and installing temporary railing (Type K) and temporary crash cushion modules, shall be considered as included in the contract prices paid for the various items of work involved and no additional compensation will be allowed therefore.

Fences, temporary railing (Type K), barricades, lights, signs, and other devices furnished, erected and maintained by Contractor, at Contractor's expense, are in addition to any construction area traffic control devices for which payment is provided for elsewhere in the specifications.

Pedestrian access facilities shall be provided through construction areas within right of way as specified herein. The surface shall be skid resistant and free of irregularities. Hand railings shall be provided on each side of walkway as necessary to protect pedestrian traffic from hazards due to construction operations. Protective overhead covering shall be provided as necessary to ensure protection from falling objects and drip from overhead structures. Railing shall be constructed of wood, S4S, and shall be painted white. Railing, overhead cover, and walkways shall be maintained in good condition and shall be kept clear of obstructions.

Full compensation for providing pedestrian facilities and protection shall be considered as included in the prices paid for the various contract items of work involved and no additional compensation will be allowed therefore.

Signs, lights, flags, and other warning and safety devices and their use shall conform to the requirements set forth in the current Manual of Traffic Controls. Signs or other protective devices furnished and erected by Contractor, at Contractor's expense, as above provided, shall not obscure the visibility of, nor conflict in intent, meaning and function of either existing signs, lights and traffic control devices or any construction area signs and traffic control devices for which furnishing of, or payment for, is provided elsewhere in the specifications. Signs furnished and erected by Contractor, at Contractor's expense, shall be approved by the Engineer as to size, wording and location.

The installation of general roadway illumination shall not relieve Contractor of the responsibility for furnishing and maintaining any of the protective facilities herein before specified.

Construction equipment shall enter and leave the highway via existing ramps and crossovers and shall move in the direction of public traffic. All movements of workmen and construction equipment on or across lanes open to public traffic shall be performed in a manner that will not endanger public traffic.

Contractor's trucks or other mobile equipment which leave a freeway lane, that is open to

public traffic, to enter the construction area, shall slow down gradually in advance of the location of the turnoff to give following public traffic an opportunity to slow down.

When leaving a work area and entering a roadway carrying public traffic, Contractor's equipment, whether empty or loaded, shall in all cases yield to public traffic.

Lanes, ramps and shoulders shall be closed in accordance with the details shown on the plans, the provisions of Section 12, Construction Area Traffic Control Devices of the Standard Specifications, and as provided in these specifications.

No material or equipment shall be stored where it will interfere with the free and safe passage of public traffic, and at the end of each day's work and at other times when construction operations are suspended for any reason, Contractor shall remove all equipment and other obstructions from that portion of the roadway open for use by public traffic.

Temporary facilities that Contractor uses to perform the work shall not be installed or placed where they will interfere with the free and safe passage of public traffic.

Temporary facilities that could be a hazard to public safety if improperly designed shall comply with design requirements specified in the contract for those facilities or, if none are specified, with standard design criteria or codes appropriate for the facility involved. Working drawings and design calculations for the temporary facilities shall be prepared and signed by an Engineer who is registered as a Civil Engineer in the State of California and shall be submitted to the Engineer for approval pursuant to **SC-51, Technical Submittals**. The submittals shall designate thereon the standard design criteria or codes used. Installation of the temporary facilities shall not start until the Engineer has reviewed and approved the drawings.

Should Contractor appear to be neglectful or negligent in furnishing warning devices and taking protective measures as above provided, the Engineer may direct attention to the existence of a hazard and the necessary warning devices shall be furnished and installed and protective measures taken by Contractor at Contractor's expense. Should the Engineer point out the inadequacy of warning devices and protective measures, that action on the part of the Engineer shall not relieve Contractor from responsibility for public safety or abrogate the obligation to furnish and pay for these devices and measures.

Provision for the payment for signs, lights, flares, temporary railing (Type K), barricades, and other facilities by extra work **GC-38, Public Convenience and Safety** or by contract item as provided in Section 12, "Construction Area Traffic Control Devices," of the Standard Specifications, shall in nowise relieve the Contractor from the responsibility as provided in this **42.2, Public Safety.**

Except as otherwise provided in this **SC-42.2**, full compensation for conforming to all of the provisions in this **SC-42.2** shall be considered as included in the prices paid for the various contract items of work and no additional compensation will be allowed therefore.

SC-43 Flagging

Attention is directed to SC-42.1, Public Convenience and SC-42.2, Public Safety, Flaggers while on duty and assigned to traffic control or to give warning to the public that the highway is under construction and of any dangerous conditions to be encountered as a result thereof, shall perform their duties and shall be provided with the necessary equipment in conformance with the current "Instructions to Flaggers" of the Department of Transportation. The equipment shall be furnished and kept clean and in good repair by Contractor at Contractor's expense.

The cost of furnishing all flaggers, including transporting flaggers, to provide for public traffic through the work under the provisions in SC-42.1 and SC 42.2 will be borne equally by BATA and Contractor. The cost of providing stands or towers for use of flaggers shall be considered as part of cost of furnishing flaggers. The price per hour for Flagging shall not exceed $35.00 per unit (hour), which is considered to constitute BATA's portion of the flagging cost.

SC-44 Clearing and Grubbing

In addition to any requirements which may be included in **GC–53, Cleanup,** clearing and grubbing shall conform to the provisions in Section 16, "Clearing and Grubbing," of the Standard Specifications and these special conditions.

Attention is directed to **SC-14.1, Aerial Deposited Lead**.

Clearing and grubbing operations shall result in no visible dust. No material containing lead shall be deposited on public roads. Contractor shall indemnify BATA and State from any costs due to any discharge of material containing lead.

Activities controlled by Contractor, except cleanup or other required work, shall be confined within the roadway right of way.

Nothing herein shall be construed as relieving Contractor of the responsibility for final cleanup of the highway as provided in **GC-53, Cleanup**, and **GC-55, Final Inspection and Acceptance of All or a Portion of the Work**.

Payment

Clearing and grubbing shall be considered as included in the prices paid for the various items of work no additional compensation shall be allowed therefore.

SC-45 Equipment and Plants

Only equipment and plants suitable to produce the quality of work and materials required will be permitted to operate on the project.

Plants shall be designed and constructed in accordance with general practice for the equipment and shall be of sufficient capacity to ensure the production of sufficient material to carry the work to completion within the time limit.

The Contractor shall provide adequate and suitable equipment and plants to meet the above requirements, and when ordered by the Engineer shall remove unsuitable equipment from the work and discontinue the operation of unsatisfactory plants.

The Contractor shall identify each piece of equipment other than hand tools, by means of an identifying number plainly stenciled or stamped on the equipment at a conspicuous location, and shall furnish to the Engineer a list giving the description of each piece of equipment and its identifying number. In addition, the make, model number and empty gross mass of each unit of compacting equipment shall be plainly stamped or stenciled in a conspicuous place on the unit. The gross mass shall be either the manufacturers rated mass or the scale weight, expressed in metric units.

The make, model, serial number and manufacturer's rated capacity in metric units for each scale shall be clearly stamped or stenciled on the load receiving element and its indicator or indicators. All meters shall be similarly identified, rated and marked. Upon request of the Engineer, the Contractor shall furnish a statement by the manufacturer, designating sectional and weighbridge capacities of portable vehicle scales.

SC-46 Preservation of Property

Attention is directed to **GC-45, Protection and Restoration of Property**, and these special conditions.

Existing trees, shrubs and other plants, that are not to be removed as shown on the plans or specified in these Special Provisions, and are injured or damaged by reason of the Contractor's operations, shall be replaced by the Contractor.

The minimum size of tree replacement shall be 600mm box and the minimum size of shrub replacement shall be No. 15 container. Replacement ground cover plants shall be from flats and shall be planted 300mm on center. Replacement of Carpobrotus ground cover plants shall be from cuttings and shall be planted 300mm on center.

Replacement planting shall conform to the requirements in Section 20-4.07, Replacement, of the Standard Specifications. Contractor shall water replacement plants in conformance with the provisions in Section 20-4.06, Watering, of the Standard Specifications.

Damaged or injured plants shall be removed and disposed of outside the highway right of way in conformance with the provisions in **GC-51 Disposal of Materials**. Replacement planting of injured or damaged trees, shrubs and other plants shall be completed not less than 20 working days prior to acceptance of the contract. Replacement plants shall be watered as necessary to maintain the plants in a healthy condition. All landscaping within any project temporary construction easement (TCE) or property of which BATA has been granted a permit to enter during the construction period shall be left, upon project completion, in a condition equal to or better than the pre-existing construction condition. Landscaping, hardscape, etc. which is damaged shall be replaced in these areas at the Contractor’s expense. Prior to the start of any work within a TCE, Contractor shall provide the Engineer with a photo record, with date shown

on the photo, of the existing condition prior to construction. Additionally, Contractor shall tour the area with the Engineer, to confirm the condition of the area with the photos. Failure of the Contractor to provide and perform these duties shall result in Contractor restoring the TCE to the satisfaction of the Engineer at Contractor's expense. Full compensation for furnishing all labor, materials, equipment and incidentals, and for doing all work involved shall be considered as included in the prices for the various contract items of work and no additional compensation will be allowed therefore.

SC-47 Utilities

The Contractor shall make arrangements to obtain electrical power, water or compressed air or other utilities required for the Contractor's operations and shall make and maintain the necessary service connections at the Contractor's own expense.

SC-48 Sanitary Facilities

State sanitary facilities will not be available for use by the Contractor's employees.

SC-49 Measurement of Quantities

All work to be paid for at a contract price per unit of measurement will be measured by the Engineer in accordance with these contract documents.

Unless shipped by rail, material paid for by mass shall be weighed on scales furnished by and at the expense of the Contractor or on other sealed scales regularly inspected by the Division of Measurement Standards or its designated representative.

Weighing, measuring and metering devices used to measure the quantity of materials used in the work shall be suitable for the purpose intended and shall conform to the tolerances and specifications as outlined in Title 4, Chapter 9 of the California Code of Regulations, the provisions of the California Business and Professions Code, Division 5, and these specifications. Devices not Type-approved by the Division of Measurement Standards shall be Type-approved in conformance with the requirements in California Test 109.

Elements of the material plant controller that affect the accuracy or delivery of data shall be made available for the application of security seals. These devices will be inspected and adjusting elements sealed prior to the first production of materials for the contract. The security seals will be furnished by the Engineer. Material production shall cease when alteration, disconnection or otherwise manipulation of the security seals occur, and production shall not resume until the device is inspected and resealed by the Engineer.

Weighing, measuring or metering devices used to determine the quantity of materials to be paid for will be considered to be "commercial devices" and shall be sealed by the Division of Measurement Standards or its authorized representative as often as the Engineer may deem necessary. The installation of all portable vehicle scales must be approved by the Engineer prior to sealing.

Vehicle scales shall be of sufficient size to permit the entire vehicle or combination of vehicles to rest on the scale deck while being weighed. Combination vehicles may be weighed as separate units provided they are disconnected while being weighed. The maximum concentrated load shall not exceed the manufacturer's designed sectional capacity of the scale.

Weighing, measuring or metering devices required by these specifications for the purpose of proportioning a material or product will be considered to be "non-commercial devices" and shall be tested and approved in conformance with the requirements in California Test 109. This testing shall be done by one of the following, in the presence of the Engineer, as often as the Engineer deems necessary:

1. A County Sealer of Weights and Measures;
2. A Scale Service Agency; or
3. A Division of Measurement Standards Official.

The Contractor shall notify the Engineer at least twenty-four (24) hours in advance of testing the device.

Under supports for scale bearing points shall be constructed of Portland cement concrete produced from commercial quality aggregates and cement, which contains not less than 275kg of cement per cubic meter. Undersupports shall be constructed in a manner to prevent any shifting or tilting of the support and shall have a minimum height of 350mm above ground line. The footings shall have a minimum depth of 150mm below the ground line. The bearing surface of the footings shall have a minimum width of 760mm and shall be of sufficient area so the pressure does not exceed 200kPa. Adequate drainage shall be provided to prevent saturation of the ground under the scale. Scale bulkheads shall be of adequate material and strength to resist displacement. If timber bulkheads are used, the minimum cross section shall be 200mm x 200mm. Wedges shall not be used to shim the supports. If shimming is necessary, the shimming shall be done by securely attached metal shims, or by grouting. Shimming shall not exceed 75mm. The approach ramps shall be level with the scale deck for a distance of not less than one-half the length of the scale deck. The mechanical indicating elements shall be installed level and plumb and shall be rigidly mounted upon a concrete foundation.

The lever system and mechanical indicating elements of hopper scales shall be rigidly attached to non-yielding supports in such a manner as to prevent any loss in weight due to bending and distortion of the supports.

When a multiple beam type scale is used in proportioning materials, an over and under indicator shall be provided which will give positive visible evidence of the amount of any over and under weight. The indicator shall be so designed that the indicator will operate during the addition of the last 90kg of any weighing. The over-travel of the indicator shall be at least one-third of the loading travel. Indicators shall be enclosed against moisture and dust.

Over and under dials, and other indicators for weighing and measuring systems used in proportioning materials shall be grouped so that the smallest increment for each indicator can be accurately read from the point at which the proportioning operation is controlled.

The Contractor shall bear the expense of all service fees for testing and approving of "non-commercial devices." The cost of the equipment, labor and materials furnished by the Contractor to assist in the testing of weighing, measuring or metering devices will be considered as included in the contract prices paid for the various contract items of work requiring the weighing, measuring or metering and no separate payment will be made therefore.

Whenever pay quantities of material are determined by weighing, the scales shall be operated by a weighmaster licensed in conformance with the requirements in the California Business and Professions Code, Division 5, Chapter 7. The Contractor shall furnish a Public weighmasters certificate or certified daily summary weigh sheets. A representative of the Department may, at the discretion of the Engineer, be present to witness the weighing and to check and compile the daily record of the scale weights.

When required by the Engineer, the operator of each vehicle weighed shall obtain a weight or load slip from the weigher and deliver that slip to the Engineer at the point of delivery of the material.

If material is shipped by rail, the car mass will be accepted provided that actual mass of material only will be paid for and not minimum car mass used for assessing freight tariff, and provided further that car mass will not be acceptable for material to be passed through mixing plants.

Vehicles used to haul material being paid for by mass shall be weighed empty daily and at additional times as the Engineer may direct. Each vehicle shall bear a plainly legible identification mark. Vehicles may from time to time be required by the Engineer to have the mass of the material to be paid for verified by weighing the empty and loaded vehicle on such other scales as the Engineer may designate.

Materials which are specified for measurement by the cubic meter "measured in the vehicle" shall be hauled in vehicles of such type and size that the actual contents may be readily and accurately determined. Unless all vehicles are of uniform capacity, each vehicle must bear a plainly legible identification mark indicating its water level capacity. Vehicles shall be loaded to at least their water level capacity, and all loads shall be leveled when the vehicles arrive at the point of delivery. Loads hauled in vehicles not meeting the above requirements or loads of a quantity less than the capacity of the vehicle, measured after being leveled off as above provided, will be subject to rejection, and no compensation will be allowed for that material.

When material is to be measured and paid for on a volume basis and it is impractical to determine the volume by the specified method of measurement, or when requested by the Contractor in writing and approved by the Engineer in writing, the material will be weighed in accordance with the requirements specified for mass measurement and the mass will be converted to volume measurement for payment purposes. Factors for conversion from mass measurement to volume measurement will be determined by the Engineer and shall be agreed to by the Contractor before that method of measurement of pay quantities will be adopted.

Quantities of material wasted or disposed of in a manner not called for under the contract; or rejected loads of material, including material rejected after it has been placed by reason of the

failure of the Contractor to conform to the provisions of the contract; or material not unloaded from the transporting vehicle; or material placed outside of the lines indicated on the plans or established by the Engineer; or material remaining on hand after completion of the work will not be paid for, and those quantities will be deducted from the final total quantities. No compensation will be allowed for hauling and disposing of rejected material.

The mass of all aggregate or other roadway material which is to be paid for on a mass basis, except imported borrow, imported topsoil, straw, fiber, aggregate subbases, aggregate bases or aggregate for cement treated bases, will be determined by deducting from the mass of material, the mass of water in the material at the time of weighing in excess of 3 percent of the dry mass of the material. When imported borrow, imported topsoil or aggregate subbase is being paid for on a mass basis, the mass to be paid for will be determined by deducting from the mass of the material, the mass of water in the material at the time of weighing in excess of 6 percent of the dry mass of the material. When straw is being paid for on a mass basis, the mass to be paid for will be determined by deducting from the mass of straw, the mass of water in the straw at the time of weighing in excess of 15 percent of the dry mass of the straw. When fiber is being paid for on a mass basis, the mass of water in the fiber at the time of weighing shall not exceed 15 percent of the dry mass of the fiber. No deduction will be made for the mass of water in fiber. The percentage of water in the material shall be determined by California Test 226. The mass of aggregate base and aggregate for cement treated bases which are to be paid for on a mass basis, will be determined as provided in Section 26, "Aggregate Bases," and Section 27, "Cement Treated Bases," of the Standard Specifications respectively.

The mass of water deducted as provided in this Section will not be paid for.

Full compensation for all expense involved in conforming to the requirements specified in this Section shall be considered as included in the unit prices paid for the materials being measured or weighed and no additional compensation will be allowed therefore.

SC-50 Contract Data Requirements List

DESCRIPTION		REFERENCE *	DUE DATE/FREQUENCY
1.	Construction Agreement	Section 4.0	No later than (NLT) six (6) Calendar days following Notice of Award (NOA)
2.	Performance Bond	SC-3	“
3.	Payment Bond	SC-3	“
4.	Certificate(s) of Insurance	SC-2	“
5.	Alternate Form W-9	Section 4.0	“
6.	Material Suppliers List, including subcontractors.	—	NLT ten (106) calendar days following NOA
7.	Personnel to sign Change Orders	GC-24	“
8.	Emergency Contacts	GC-24	“
	EEO Officer – Contractor and all subcontractors	GC-8	“

DESCRIPTION		REFERENCE *	DUE DATE/FREQUENCY
9.	Full time Safety Representative(s) – Name(s) and resume(s) of person(s).	SC-13	"
10.	Prevailing Wages Rates	GC-8.3	"
11.	Certified Payroll	GC-58	Monthly
12.	Executed Subcontracts	GC-20	NLT thirty (30) calendar days of NOA
13.	Equipment and Plants – List of Equipment	SC-45	Monthly

* ***GC = General Condition***
SC = Special Condition

This list is intended to summarize the requirements for submittal of documents as specified in the Contract Documents. If conflicts exist between the list and the referenced paragraph, the referenced paragraph will take precedence. Contractor shall refer to the Special Conditions, General Conditions for required contract data.

For technical documents, refer to Technical Submittals List found in SC-51of the Special Conditions.

SC-51 Technical Submittals List

	ITEM	REFERENCE *	DUE DATE/ FREQUENCY	COMMENTS
1.	Schedule of Owner Furnished Materials	SC-8	NLT six calendar days after Notice to Proceed	6 copies
2.	Submittal of all Field Notes & Cut Sheets		No less than three (2) weeks in advance of work operation	6 copies
3.	Injury Prevention Plan (IPP)	SC-13	NLT six calendar days following NOA	6 copies
4.	Site Safety Plan (s)	SC-13 GC-38	NLT six calendar days following NOA	6 copies
5.	Emergency Action Plan	SC-13.6	NLT six calendar days following NOA	6 copies
6.	Copies of all accident investigations	SC-13.6	NLT five calendar days following accident	6 copies
7.	Copies of annual and quadrennial crane certifications	SC-13.6	NLT five calendar days prior to a crane working onsite	6 copies
8.	Copies of Job Hazard Analysis	SC-13.6	NLT five calendar days prior to operation being performed	6 copies
9.	List of first aid / CPR trained employees and proof of training	SC-13.7	NLT six calendar days following NOA	6 copies
10.	Material Safety Data Sheets (MSDS)	SC-14	NLT ten calendar days following NOA	6 copies
11.	Aerially Deposited Lead Submittal	SC-14.1	At least fifteen calendar days prior to beginning any work in areas containing Aerially Deposited Lead	6 copies
12.	Electrical Utility Shutdowns	SC-17	At least fifteen calendar days prior notice	6 copies
13.	Schedule of Values – Cost Breakdown	SC-20	NLT twenty calendar days following NOA	1 copy
14.	Not Used			
15.	Baseline CPM Schedule	SC-23 GC-31	NLT six calendar days following NOA	3 copies
16.	Monthly CPM Schedule Updates	SC-23 GC-31	five days in advance of progress payment	3 copies
17.	Quality Assurance Plan	SC-33	NLT six calendar days following NOA	6 copies
18.	Debris Containment and Collection Program	GC-53	NLT ten calendar days following NOA	6 copies
19.	WPCP (Water Pollution Control Plan)	SG-24	NLT six calendar days following NOA	10 copies
20.	Product Data Sheets	GC-43	NLT calendar six days following NOA	6 copies
21.	Warranties	GC-73	Before Final Acceptance	As Required

	ITEM	REFERENCE *	DUE DATE/ FREQUENCY	COMMENTS
22.	Disposal – Submit Sampling and Analysis Plan		At least fifteen (15) days prior to beginning sampling or analysis	6 copies
23.	Sampling and Analysis Plan		NLT fifteen (15) days before any sampling or analysis	6 copies
24.	Health and Safety Plan		At least six calendar days prior to beginning work	6 copies
25.	Welding Quality Control Plan		Within seven calendar days prior to the performance of any welding	As Required
26.	Operations & Maintenance Manuals		Before Final Acceptance	As Required
27.	Written Schedule of Planned Closures		One (1) week in advance of any lane closure	6 copies
28.	Amendment to the Closure Schedule		At least three days in advance of a planned closure	6 copies
29.	Shop Drawings			
30.	Cost Breakdown for Electrical Work		NLT six calendar days after Notice to Proceed	6 copies

The above table represents only a partial listing of submittal requirements. The above list is a reminder to the Contractor of his responsibility to submit submittals in a timely manner.

The technical submittal list is intended to summarize the requirements for submittal of documents as specified in the Contract Documents. If conflicts exist between the list and the referenced paragraph, the referenced paragraph will take precedence.

SECTION 7. GENERAL CONDITIONS

7.1 Legal Responsibilities and Relationships

GC-1 Applicable Law and Jurisdiction

This Contract incorporates provisions required by the laws of the State of California and the Federal Government. It shall be the Contractor's responsibility to determine the applicability of State and Federal laws, rules and regulations to the work to be performed under this Contract.

This Contract shall be governed by California law. Any lawsuit or legal action arising from this Contract shall be commenced and prosecuted in the courts of Alameda County, California.

GC-2 Compliance with Laws and Regulations

The Contractor shall keep itself informed of, comply with, and shall cause all of its agents, employees, suppliers and subcontractors of any tier, to observe and comply with all applicable Federal, State, and local laws, regulations, and policies, including, but not limited to, all applicable terms and conditions prescribed for third party contracts by the U.S. Department of Transportation (DOT). Contractor shall indemnify, defend, and hold harmless the State, BATA, the Municipality or other entity within whose jurisdiction or on whose property the work is being performed, and Commissioners, their Board of Supervisors, Board of Directors, Councils, officers, agents, consultants and employees from any claim, liability, loss, injury or damage arising out of, or in connection with, the performance of this Contract by the Contractor and/or its agents, employees or subcontractors, excepting only loss, injury or damage caused by the active or sole negligence or willful misconduct of personnel employed by the indemnities.

GC-3 Contractors' Licensing Requirements

Contractors are required by law to be licensed in the State of California and are regulated by the Contractors' State License Board. Any questions related thereto may be referred to the Registrar of the Board whose address is:

Contractors' State License Board
1020 N Street
Sacramento, CA 95814

GC-4 Independent Contractor

The Contractor represents that it is fully experienced and properly qualified to perform the class of work provided for herein, and that it is properly licensed, equipped, organized and financed to perform such work. The Contractor shall act as an independent Contractor and not as the agent or employee of BATA in performing the Contract, maintaining complete control over its employees. Nothing contained in this Contract or any subcontract awarded by the Contractor shall create any contractual relationship between any such subcontractor and BATA, and the

Contractor shall perform all work in accordance with its own methods subject to compliance with the Contract.

GC-5 Permits, Licenses, Fees and Notices

As specified in **Section 6.0 - Special Conditions**, or as otherwise required by law, the Contractor shall, before beginning any work which requires a permit or similar authorization, secure and pay for all necessary licenses, fees, bonds, charges, inspections, customs or import duties, permits, and similar authorizations from all governmental authorities required to fulfill the Contract requirements and the Contractor's obligations.

GC-6 Nondiscrimination

The Contractor shall comply with Section 1735 of the California Labor Code, which reads as follows:

> "No discrimination shall be made in the employment of persons upon public works because of race, religious creed, color, national origin, ancestry, physical disability, mental disability, medical condition, marital status, or sex of such persons, except as provided in Section 12940 of the Government Code, and every Contractor for public works violating this section is subject to all the penalties imposed for a violation of this chapter."

In the performance of this Contract, the Contractor and its subcontractors shall not unlawfully discriminate, harass or allow harassment, against any employee or applicant for employment because of sex, race, color, ancestry, religious creed, national origin, physical disability (including HIV and AIDS), mental disability, medical condition (cancer), marital status, age (over 40), and the denial of family care leave. Contractor and its subcontractors shall ensure that the evaluation and treatment of their employees and applicants for employment are free from such discrimination and harassment. Contractor and its subcontractors shall comply with the provisions of the Fair Employment and Housing Act (Government Code §12900 *et seq.*) and the applicable regulations promulgated thereunder (California Code of Regulations, Title 2, Section 7285.0 *et seq.*). The applicable regulations of the Fair Employment and Housing Commission implementing Government Code, Section 12290 (a-f), set forth in Chapter 5 of Division 4 of Title 2 of the California Code of Regulations are incorporated into this Contract by reference and made a part hereof as if set forth in full. The Contractor and its subcontractors shall give written notice of their obligations under this clause to labor organizations with which they have a collective bargaining or other agreement. The Contractor shall include the nondiscrimination and compliance provisions of this clause in all subcontracts to perform work under this Contract. The Contractor and its subcontractors shall permit access to all records of employment, employment advertisements, application forms, and other pertinent data and records by the State Fair Employment Practices and Housing Commission, or any other agency of the State of California designated by the State, for the purpose of investigation to ascertain compliance with this clause.

GC-7 Prohibited Interests

No BATA Commissioner, officer, or employee shall have any direct or indirect interest in this Contract or the proceeds thereof.

GC-8 Labor Provisions

8.1 Safety

In addition to the Contractor's own safety procedures, and any safety procedures required under Federal, state, or local laws or regulations, including compliance with the provisions of the California Occupational Safety and Health Act of 1973 and any additional safety requirements contained in **Section 6.0 Special Conditions**, Contractor shall implement and enforce all safety requirements that are determined by BATA's Safety Coordinator to be applicable to the performance of any Work under this Contract.

8.2 Overtime Requirements

Neither the Contractor nor any subcontractor of any tier shall require or permit any worker to work in excess of eight (8) hours in any day or in excess of forty (40) hours in any work week (defined as seven (7) sequential calendar days) unless such worker receives compensation at a rate not less than one and one-half times the basic rate of pay for all hours worked in excess of eight hours in any day or in excess of forty (40) hours in such work week, whichever is greater. Failure to comply with the preceding requirements shall subject the Contractor or any subcontractor of any tier to the penalties specified in Labor Code §1813.

8.3 Prevailing Wage Rates

CONTRACTOR shall comply with applicable sections of the California Labor Code (e.g.,
Sections 1720 *et seq*. and Title 8 of the California Code of Regulations Sections 16000 *et seq*.) governing the payment of prevailing wages, as determined by the Director of the California Department of Industrial Relations, in regards to all work performed under this Agreement. In particular, CONTRACTOR's attention is drawn to Labor Code Sections 1771 (payment of prevailing wage rate), 1775 (penalty for non-payment), 1776 (payroll records), and 1777.5 (use of apprentices). The Director of the California Department of Industrial Relations has ascertained the general prevailing rate of wages (which rate includes employer payments for health and welfare, vacation, pension, and similar purposes) applicable to the Work to be performed under this Contract, for straight time, overtime, Saturday, Sunday and holiday work. Said prevailing wage rates are incorporated herein by reference. These wage rates are available through the California State Department of Industrial Relations, **http://www.dir.ca.gov**, and are also on file with BATA and are available upon request. The Contractor shall post a copy of the prevailing wage rates at the jobsite or material staging area.

Workmen employed in the work must be paid at the rates at least equal to the prevailing wage rates as adopted. If Contractor uses a craft or classification not shown on the prevailing wage determinations, the Contractor may be required to pay the wage rate of that craft or

classification most closely related to it as shown in the general determinations effective at the time of Contract award.

8.4 Not Used

8.5 Not Used

8.6 Not Used

Pursuant to Labor Code §1773.8, the Contractor shall be liable for travel and subsistence payments to each worker needed to execute the Work, as such travel and subsistence payments are defined in the applicable collective bargaining agreements filed in accordance with the provisions of Labor Code §1773.8.

8.7 Retention of Labor Records

In the performance of the work specified in this Contract, the prime Contractor shall be responsible for compliance with California Labor Code Section 1776 pertaining to payroll records. Contractor and all of its subcontractors of any tier shall maintain all payrolls and basic payroll records during the course of the work and shall preserve them for a period of three (3) years from the completion of the Contract. Such records shall contain the names of all employees, their address, social security number, correct classifications, hourly rates of wages paid, daily and weekly number of hours worked, deductions made, and actual wages paid. These records shall be made available by the Contractor or any of its subcontractors of any tier for inspection, copying, or transcription by authorized representatives of BATA or the State of California, and the Contractor or any of its subcontractors of any tier shall permit such representatives to interview employees during working hours on the job.

8.8 Employment of Apprentices

In the performance of the work specified in this Contract, the prime Contractor shall be responsible for compliance with California Labor Code Section 1777.5, pertaining to the employment of registered apprentices.

8.9 Subcontracts

The Contractor shall insert in all of its subcontracts the clauses set forth in this **GC-8, Labor Provisions** and also a clause requiring its subcontractors to include these clauses in any lower tier subcontracts. The Contractor shall be responsible for compliance by any subcontractor or lower tier subcontractor with the clauses set forth in this **GC-8, Labor Provisions**. Pursuant to Public Contract Code §6109, the Contractor is prohibited from performing work on the Project with a subcontractor who is ineligible to perform work on a public works project pursuant to Sections 1777.1 or 1777.7 of the California Labor Code.

GC-9 Hazardous Materials or Unusual Conditions

In the event underground tanks, vaults, materials or unusual conditions as specified in Public Contract Code §7104(a) are encountered during prosecution of the Work, Contractor shall immediately, and before disturbing such conditions, notify BATA in writing of any:

1. Material that the Contractor believes may be material that is hazardous waste as defined in Section 25117 of the Health and Safety Code that is required to be removed to a Class I, II or III disposal site in accordance with the provisions of existing law.
2. Subsurface or latent physical conditions at the site differing from those indicated.
3. Unknown physical conditions at the site of any unusual nature, different materially from those ordinarily encountered and generally recognized as inherent in work of the character provided for in this Contract.

BATA shall promptly investigate the conditions, and if it finds the conditions to be materially different or to involve hazardous waste, and cause a decrease or increase in the Contractor's cost of, or the time required for, performance of any part of the work, shall issue a Change Order under the procedures described in **GC-65, Change Requests and Change Notices** and **GC-66, Change Order.** Any suspension of Work shall be administered in accordance with the provisions of **GC-69 – Suspension of the Work.** If a dispute arises between BATA and the Contractor whether the conditions materially differ, or involve hazardous waste, or cause a decrease or increase in the Contractor's cost of, or time required for, performance of any part of the work, the Contractor shall not be excused from any scheduled completion date provided for by this Contract, but shall proceed with all work to be performed under this Contract; *provided, however,* the Contractor shall retain any and all rights provided either by contract or by law which pertain to the resolution of disputes and protests between the contracting parties.

GC-10 Organization Conflicts of Interest

Contractor shall take all reasonable measures to preclude the existence or development of an organizational conflict of interest in connection with work performed under the agreement resulting from this and other BATA solicitations. An organizational conflict of interest occurs when, due to other activities, relationships, or contracts, a firm or person is unable, or potentially unable, to render impartial assistance or advice to BATA; a firm or person's objectivity in performing the contract work is or might be impaired; or a firm or person has an unfair competitive advantage in proposing for award of a contract as a result of information gained in performance of this or some other Project. Whenever BATA is awarding a contract that involves the rendering of advice, it will consider whether there exists the potential for bias, because of other activities, relationships or contracts of the Contractor, and if so, whether any potential bias can be mitigated acceptably by BATA and the Contractor.

Contractor shall not engage the services of any subcontractor or independent contractor on any work related to this Agreement if the subcontractor or independent contractor, or any employee of the subcontractor or independent contractor, has an actual or apparent organizational conflict of interest related to work or services contemplated under this Agreement.

GC-11 Not Used

GC-12 Archaeological/Historical Discoveries

If this project has been designated in the Section **1.0 Invitation to Bidders** as an archaeological sensitive project, refer to **Section 6.0 Special Conditions**.

Should any archaeological or historical artifacts or skeletal material be discovered or unearthed during construction activities, all work within ten (10) meters of the find shall be halted. The Contractor (Subcontractor) [or Engineer or Inspector as appropriate] shall immediately notify BATA, and BATA will initiate procedures in accordance with 36 CFR 800.11, State Law (California Public Resources Code Section 5097.98, Health and Safety Code Section 7050.5, and Alameda County Ordinance Code Sections B6-16 through B6-23. Construction activities within ten (10) meters of the find shall remain halted until authorization is obtained from the Environmental Program Manager, or the Environmental Program Manager's named and designated agent, that construction in the vicinity of the find may resume.

In the event of work suspension pursuant to this section, the Contractor shall, within twenty-four (24) hours, notify BATA of the costs involved resulting from said work stoppage. The Contractor shall maintain a log of each such stoppage of work, setting forth the date and time of notification of work stoppage, date and time of actual cessation of operations in the area, and date and time of commencement of operations and costs incurred herein. The Contractor shall submit a claim for reimbursement of such costs within seventy-two (72) hours thereof and shall notify BATA of the anticipated amount of claim within twenty-four (24) hours of said work suspension. In the event of work suspension thereunder, the Contractor shall exert all reasonable efforts to otherwise utilize labor and equipment affected by the suspension in other portions of the project.

GC-13 Not Used

GC-14 Patent Rights

Any discovery or invention which is an integral part of the items being furnished under this Contract, as well as all information, design, specifications, data and findings which arise or is developed in the course of performing the work under this Contract, shall become the property of BATA.

GC-15 Intellectual Property, Copyright and Patent Infringement

Contractor, upon BATA's request, shall defend BATA and Caltrans against any claim against BATA and/or Caltrans for patent, copyright, trademark, trade secret, or other intellectual property infringement based upon BATA's or Caltrans' use of any work, goods, or services provided by the Contractor pursuant to this Contract. If BATA requests the Contractor to defend against such claim, Contractor shall hold BATA and Caltrans harmless from, and indemnify BATA and Caltrans Municipality for, any liability arising from the claim, provided that (i) BATA notifies Contractor in writing promptly, but not more than thirty (30) days after BATA

has actual notice of the claim; (ii) Contractor has sole control of the defense and all related settlement negotiations, unless otherwise agreed by the Parties; and (iii) BATA gives Contractor all available information and reasonable assistance for that defense. If Contractor fails or refuses to defend any such claim, BATA and/or Caltrans may assume control of the defense and Contractor shall indemnify and hold BATA and Caltrans harmless for all fees, costs and expenses associated with or arising from such defense.

This obligation shall not apply when the alleged infringement arises entirely from modification of the work, goods, or services by BATA without the Contractor's approval.

GC-16 Rights in Technical Data

BATA shall have the right to use, duplicate or disclose, in whole or in part, in any manner and for any purpose whatsoever, and to have or permit others to use: Any manuals, instructional materials prepared for installation, operation, maintenance or training purposes and technical data pertaining to end items, components or processes which were prepared for the purpose of identifying sources, size, configuration, mating and attachment characteristics, functional characteristics and performance requirements ("form, fit and function" data; e.g., specification control drawings, catalog sheets, outline drawing). The term Technical Data as used herein means technical writing, sound records, pictorial reproductions, drawings, or other graphic representations and works of a technical nature, whether or not copyrighted, which are specified to be delivered pursuant to this Contract. The term does not include financial reports, costs analyses, and other information incidental to contract administration.

For copyrighted material, the Contractor agrees to and does hereby grant to BATA and Caltrans, and to their Commissioners, Directors, officers, agents and employees acting within the scope of their official duties, a royalty-free, nonexclusive and irrevocable license for BATA and/or Caltrans to publish, translate, reproduce, deliver, perform, dispose of, and to authorize others to use, all Technical Data now or hereafter covered by copyright.

No such copyrighted matter shall be included in Technical Data furnished hereunder without written notice of the copyright owner granting BATA and State consent to use such copyrighted matter in the manner above described.

The Contractor shall report to BATA promptly and in reasonable written detail each notice or claim of copyright infringement received by the Contractor with respect to any Technical Data delivered hereunder.

BATA reserves the right to use the design and the tooling developed for the furnishing of equipment under this Contract in future contracts based on this specification. The Contractor shall maintain design data, including drawings, layouts, and any relevant Engineering data, and all necessary tooling in good order for a minimum of four (4) years after final acceptance of the last items furnished under this Contract, and shall transfer that data, including tooling, to BATA upon request at no cost to BATA. All plans, drawings, diagrams, schematics, and specifications shall become the property of BATA, unless otherwise designated by BATA.

GC-17 Ownership of Work and Material

BATA shall own all materials, work in progress, and finished goods produced by the Contractor pursuant to this Contract, for which progress payments have been made and which have been satisfactorily delivered to a designated area. Such ownership shall be free of all encumbrances. Nevertheless, the Contractor shall be responsible for risk of loss for those items of Work for which the Contractor has care, custody and control, until Final acceptance of all work as discussed in GC-55.

Unless otherwise specifically provided in this Contract, the Contractor shall provide and pay for materials, equipment, tools, utilities, transportation, and other facilities and services necessary for the prosecution of the Work provided for in this Contract.

The Contractor will submit to BATA a "Final Release of All Liens and Claims" as a condition precedent to receiving final payment under this Contract.

GC-18 Title and Risk of Loss

Unless otherwise provided for, title to the Work and risk of loss shall pass to BATA upon final acceptance of the Work, and the Contractor shall furnish or execute all necessary documents of title at that time.

GC-19 Assignment and Delegation

The Contractor shall not assign any of its rights or delegate any of its responsibilities under this Contract without the prior written consent of BATA.

GC-20 Subcontracts

The Contractor shall be fully responsible and liable for the products and actions of all subcontractors and suppliers of any tier, and shall include in each subcontract any provisions necessary to make all of the provisions of this Contract fully effective. The Contractor shall provide all necessary plans, specifications, schedules, and instructions to its suppliers and subcontractors to enable them to properly perform their work. The Contractor shall submit executed copies of all subcontracts entered into pursuant to this Contract to BATA within sixty (**60) calendar days** from issuance of a Notice of Award.

GC-21 Waiver and Non-waiver

A waiver by one party of a right to a remedy for breach of this Contract by the other party shall not be deemed to waive the right to a remedy for a subsequent breach by the other party. BATA's acceptance of goods, or services or payment under this Contract, shall not preclude BATA from recovering against the Contractor or the Contractor's surety for damages due to the Contractor's failure to comply with this Contract.

GC-22 Antitrust Claims

In entering into a public works contract, or a subcontract to supply goods, services, or materials pursuant to a public works contract, the Contractor agrees to assign to the awarding body all rights and title to, and all interest in all causes of action it may have under Section 4 of the Clayton Act, or under the Cartwright Act, arising from the purchases of goods, services, or materials pursuant to the public works contracts or subcontracts. This assignment shall be made and become effective at the time the awarding body tenders final payment to the Contractor, without further acknowledgement by the parties.

GC-23 Stop Notices

BATA will withhold payments otherwise due the Contractor in order to satisfy Stop Notices which have been properly filed, in accordance with the requirements of California Civil Code Title 15, Chapter 4, regarding Stop Notices. The Contractor shall include this **GC - 23, Stop Notices** in all subcontracts and similar documents entered into by Contractor for the performance of Work under this Contract.

7.2 AUTHORIZED REPRESENTATIVES AND COMMUNICATIONS

GC-24 Authorized Representatives

The Contractor shall designate, in writing, before starting work, an Authorized Representative who, during performance of the Contract, shall have full authority to act on the Contractor's behalf in all matters within the scope of this Contract.

When the Contractor is comprised of two or more persons, firms, partnerships, or corporations functioning on a joint venture basis, said authorized representative shall have the authority to represent and act for the joint venture.

Said authorized representative shall be present at the site of the Work at all times while work is actually in progress on the Contract. When work is not in progress and during periods when work is suspended, arrangements acceptable to BATA shall be made for any emergency work that may be required.

Whenever said authorized representative is not present on any particular part of the Work where BATA may desire to give direction, orders will be given by BATA, which shall be received and obeyed by the superintendent or foremen who may have charge of the particular work in reference to which the orders are given.

Except as hereinafter provided, all orders by BATA shall be given in writing. Those not so given shall be considered to be invalid and not binding. Emergency conditions dealing with safety of persons and protection of property are accepted, and such oral directions will be confirmed in writing as soon as possible, but shall be immediately complied with by Contractor.

BATA will similarly designate, in writing, an Authorized Representative to be its formal contact between BATA and Contractor. Said Authorized Representative will be responsible for all matters relating to the execution of work within the scope of this Contract and will decide all questions which may arise as to the quality or acceptability of the Work and as to the manner of performance and rate of progress of the Work; all questions which may arise as to the interpretation of plans and specifications; all questions as to the acceptable fulfillment of the Contract on the part of Contractor; and all questions as to compensation for work performed.

Written notification to the other party shall be provided, in advance, of changes in the name or address or the scope of authority vested in such Authorized Representative.

Each Authorized Representative may, from time to time, delegate to other named individuals certain authority and responsibilities. The names of such individuals, the scope of their authority and responsibility, and the designation of their titles will be communicated to the other party in writing.

The designation of Authorized Representatives of the parties and their delegates as outlined above shall take place at the pre-construction meeting as specified in **GC-26, Pre-Construction Meeting.**

GC-25 Notices and Communications

25.1 Notices

All notices and other communications concerning this Contract shall be written in English, shall bear the number assigned to this Contract by BATA and shall follow BATA's correspondence format and reference system. Notices and other communications may be delivered personally, by telegram, by private package delivery, by FAX, or by regular, certified, or registered mail.

The names of the individuals for each of the parties and their addresses to which other communications and correspondence should be delivered will be established and made known to the other party at the pre-construction meeting as specified in **GC-26, Pre-Construction Meeting**.

A notice to BATA will be effective only if it is delivered to BATA's Authorized Representative at the address to be made known to Contractor at the pre-construction meeting as specified in **GC-26, Pre-Construction Meeting**.

A notice to Contractor will be effective only if it is delivered to Contractor's Authorized Representative at the address to be made known to BATA at the pre-construction meeting as specified in **GC-26, Pre-Construction Meeting**.

25.2 Drawing/Plan Clarification

An answer from the owner, in response to an inquiry from Contractor, intended to make some requirement(s) of the drawings or plans clearly understood. Drawing clarifications/plan clarifications may be sketches, drawings or in narrative form and will not change any requirement of the drawings or plans. Responses to Contractor inquiries shall be as outlined in the Article 25.3 "Requests for Information" of these General Conditions.

25.3 Requests for Information (RFIs)

In the event that Contractor, subcontractor or supplier, at any tier, determines that some portion of the drawings, specifications or other contract documents requires clarification or interpretation by the owner, Contractor shall submit a Request for Information (RFI) in writing to BATA. Requests for Information may only be submitted by Contractor and shall only be submitted on the Request for Information form provided by BATA. Contractor shall clearly and concisely set forth the issue for which clarification or interpretation is sought and why a response is needed from BATA. In the RFI, Contractor shall set forth its own interpretation or understanding of the requirement along with the reasons why it has reached such an understanding.

BATA will review all RFI to determine whether they are Requests for Information within the meaning of this Contract. If BATA determines that the document is not a RFI it will be returned to Contractor, unreviewed as to content, for resubmittal as the appropriate document required by the subject matter.

Responses to RFI shall be issued within five (5) working days of receipt of the request from Contractor unless BATA determines that a longer period of time is necessary to provide an adequate response. If a longer period of time is determined necessary by BATA, BATA will, within five (5) working days of receipt of the request notify Contractor of the anticipated response time. The five (5) working days referred to herein will start on the date stamped received "In From Contractor" by BATA and depends on the date stamped "Out to Contractor" by BATA If Contractor submits a RFI on an activity with five (5) working days or less of float on the current project schedule, Contractor shall mark the RFI as "Critical." Contractor shall not be entitled to any time extension due to the time it takes BATA to respond to such Critical request provided that BATA responds within the five (5) working days set forth above.

Responses from BATA will not change any requirement of the Contract documents unless so noted in the response to the RFI. In the event Contractor believes that a response to a RFI will cause a change to the requirements of the Contract, Contractor shall immediately give written notice to BATA in accordance with GC-65, Change Requests and Change Notices. Failure to give such written notice shall waive Contractor's right to seek additional time or cost in accordance with Section GC-65.1, Change Requests, of the Contract documents.

GC-26 Pre-Construction Meeting

Prior to issuance of a Notice to Proceed, a pre-construction meeting will be held at a time and place to be designated by notice from BATA. At this meeting, detailed procedures will be discussed for handling the following items:

1. Authorized Representative
2. Correspondence
3. Notices
4. Change requests and change notices
5. Change orders
6. Submittals
7. Approvals
8. Progress payments
9. Schedules
10. Community relations
11. Inspection plans
12. Requests for Information (RFI)
13. Other pertinent agenda items

GC-27 Project Meetings

BATA will schedule and preside over all meetings (including but not limited to weekly, pre-production, periodic, and special meetings) throughout the progress of the Work. Agendas for the meetings may include, but are not necessarily limited to, discussions of performance observations, problems, conflicts, schedules, delivery schedules, supplier fabrication, quality standards, Contract modifications, and any other topics that BATA determines to be relevant to the project. Contractor attendance at these meetings is mandatory.

GC-28 Publicity Releases

All publicity releases or releases of reports, papers, articles, maps, or other documents in any way concerning this Contract or the Work hereunder which Contractor or any of its subcontractors desires to make shall be subject to approval by BATA prior to release.

7.3 TIME FOR PERFORMANCE OF WORK

GC-29 Notice to Proceed

Contractor shall commence performance of Work under this Contract immediately after receipt of the Notice to Proceed issued by BATA, and shall continuously and diligently prosecute the Work to completion on or before the time or times set forth in **Section 6.0 Special Conditions** of this Contract. Any work performed or expenses incurred by Contractor prior to Contractor's receipt of Notice to Proceed shall be entirely at Contractor's risk.

A forty-eight (48)-hour advance notice will be required before starting work. Contract personnel will be allowed on the job site only during normal working hours unless otherwise authorized by BATA.

GC-30 Time of Completion

Time is of the essence in this Contract. Contractor's failure to perform Work, deliver goods, or provide services on time and in accordance with the approved progress schedule shall be a material breach of this Contract.

Time periods measured in calendar days shall be computed by excluding the day upon which the period begins to run and including the last day of the period. A calendar day shall be any day including all legal holidays, Saturday and Sunday.

GC-31 Progress Schedule

Contractor shall develop and maintain progress schedules in CPM format identifying critical events involved in the performance of the Work under the Contract in accordance with the requirements of **Section 6.0 Special Conditions.**

GC-32 Excusable Delays and Extensions of Time

Except with respect to defaults of Subcontractors, neither Contractor nor BATA shall be considered in default by reason of any failure to perform in accordance with the Contract schedule if such failure arises out of causes beyond the control and without the fault or negligence of the defaulting party. Such causes may include, but are not restricted to, acts of God or of the public enemy, acts of the government in its sovereign or contractual capacity, fires, floods, epidemics, quarantine restrictions, strikes or other labor disputes, freight embargoes, and unusually severe weather, but in every case the failure to perform must be beyond the control and without the fault or negligence of the defaulting party. If the failure to perform of either Contractor or BATA is caused by the default of a Subcontractor or a third party Contractor to BATA, and if such default arises out of causes beyond the control of all the parties, and without the fault or negligence of any of them, neither Contractor nor BATA shall be in default by reason of any such failure to perform. As used herein, the terms "Subcontractor" and "Subcontractors" mean Subcontractor(s) or Supplier(s) to Contractor at any tier.

GC-33 Failure to Complete the Work on Time

If the Work is not completed by Contractor in the time specified, as that time may be extended as authorized elsewhere in the Contract, it is understood that BATA will suffer damage; and, it being impracticable and extremely difficult to determine the amount of actual damage, it is agreed that Contractor shall pay as fixed and liquidated damages, and not as a penalty, the sum set forth in **Section 6.0 Special Conditions** of the Contract for each calendar day of delay until the Work is completed and accepted, and Contractor and its surety shall be liable for the amount thereof.

7.4 PERFORMANCE OF WORK

GC-34 Not Used

GC-35 Temporary Construction Facilities and Utilities

Contractor shall furnish all temporary construction facilities, utilities, and services that are necessary to prosecute the Work. This includes, but is not limited to, fencing, flagmen, sanitary facilities, security, power, water and weather protection. Contractor shall remove all temporary facilities upon completion of the Work or when they are no longer needed for Contractor's purposes, whichever is earlier.

GC-36 Character of Workmen

If any Subcontractor or person employed by Contractor shall appear to BATA to be incompetent or to act in a disorderly, improper or unsafe manner, such person shall be discharged immediately on the request of BATA, and such person shall not again be employed on the Work.

GC-37 Working Environment

Contractor shall ensure and maintain a working environment free of personal harassment and intimidation between Contractor's forces and BATA employees and members of the public at all BATA project sites and in all BATA facilities at which Contractor's forces are assigned to work. Conduct that creates an intimidating, hostile, or offensive working environment is prohibited. Failure to comply with the above will be considered a material breach of this Contract.

GC-38 Public Convenience and Safety

Contractor shall so conduct its operations as to offer the least possible obstruction and inconvenience to the public and shall have under construction no greater length or amount of work than can be prosecuted properly with due regard to the rights of the public. Unless otherwise provided in the Contract, all public traffic shall be permitted to pass through the Work with as little inconvenience or delay as possible. Where possible, such traffic shall be routed on new or existing paved surfaces. Spillage resulting from hauling operations along or across any public traveled way shall be removed immediately by Contractor at its expense. Existing traffic signal and highway lighting systems shall be kept in operation for the benefit of the traveling public during progress of the Work, and other forces will continue routine maintenance of existing systems.

The Contractor shall install signs, lights, flares, barricades, and other facilities for the sole convenience and direction of public traffic and shall furnish competent flaggers or a uniformed police officer whose sole duties shall consist of directing the movement of public traffic through or around the Work.

Work shall be performed in such a manner as to eliminate unnecessary noise, obstructions and other annoyances to occupants. The Contractor will not encumber premises with materials, equipment, and/or parking of cars; Contractor shall store materials, equipment and park cars in designated areas.

See **Section 10.0 Construction Details** for additional traffic control requirements, if any.

GC-39 Cooperation/Coordination and Work by Others

Contractor shall coordinate its Work with all other Contractors and subcontractors performing Work on the site. Contractor shall schedule its Work so as to avoid conflicts with other Contractors and to avoid damage to completed or incomplete Work. Contractor shall be responsible for any damage to the Work of other Contractors or subcontractors if Contractor's actions resulted in such damage and are a) willful or b) negligent and the proximate cause. Contractor shall take immediate action to remedy such damage so as to not delay the immediate prosecution of the Work.

GC-40 Security

Contractor shall provide and be responsible for all security at the job site that is required to protect its material and equipment and all Work in place. Contractor shall also be responsible for providing all security and traffic control required by any city having jurisdiction in the area where Work is being performed.

GC-41 Product Options, Supplier Approval and Substitutions

For products specified in this Contract or in Contractor's submittals by brand name or manufacturer, whether or not followed by the words "or approved equal," Contractor shall select any product or manufacturer named, or shall submit a request to substitute an equal product or manufacturer. As required by the California Public Contract Code §3400, such request shall be made within thirty-five (**35) calendar days** from date of the Notice of Award in order to receive consideration, unless later submission of a request is agreed to by BATA. The Contractor shall submit a separate request for each substitution. The burden of proof as to the equality of any material, process or article shall rest with Contractor. BATA's determination of the equality or superiority of an article proposed for substitution shall be based upon but need not be limited to consideration of such factors as are specified in the Technical Specifications; dimensional compatibility with other materials with which it combines to produce a unified design system; all aspects of finished appearance including form, texture, and color, as it affects other design elements. In the event an approved substitution is more expensive than the specified materials, process or article, the difference in cost of such material, process or article so furnished shall be borne by Contractor. Contractor may not make a substitution without BATA's prior written approval. If applicable, specific requirements for the submittal of such requests will be contained in **Section 6.0 Special Conditions**.

BATA shall approve or disapprove Contractor's request for substitution of suppliers or products within thirty (30) days of BATA's receipt of all information required by BATA for such determination.

GC-42 Source of Materials

The Contractor shall be completely responsible for locating, identifying, and furnishing all materials required to be furnished under this Contract, except for BATA furnished materials specified in **Section 6.0 Special Conditions.** BATA shall perform or cause to be performed all tests required to demonstrate to BATA's satisfaction that the proposed materials satisfy the requirements of the Contract.

GC-43 Submittal of Shop Drawings, Product Data and Samples

Working and shop drawings may consist of drawings, diagrams, schedules, or other data prepared by Contractor, or any subcontractor of any tier, manufacturer, supplier or distributor, as are necessary to adequately control the Work or to illustrate or detail some portion of the Work. No change shall be made by Contractor in any working or shop drawing after it has been approved by BATA.

Working Drawings for any part of the permanent Work shall include, but not be limited to: stress sheets, anchor bolt layouts, shop details, erection plans, equipment lists and any other information specifically required elsewhere in the Contract.

Working drawings for cribs, cofferdams, falsework, temporary support systems, haul bridges, centering and form work and for other temporary work and methods of construction Contractor proposes to use, shall be submitted when required by the Contract or ordered by BATA.

Product data are illustrations, standard schedules, performance charts, instructions, brochures, diagrams, or other information furnished by Contractor to illustrate materials, products, systems, or equipment for some portion of the Work.

Samples are physical examples that illustrate materials, equipment, or workmanship, and establish standards by which the Work shall be judged.

Working drawings and shop drawings, product data, samples, and similar submittals shall not modify any Contract requirement, except as expressly allowed by this Contract. The purpose of their submittal is to demonstrate, for those portions of the Work for which submittals are required, the way Contractor proposes to comply with Contract requirements.

Contractor shall review, approve, and submit to BATA all working and shop drawings, product data, samples, or similar submittals required by this Contract, or that are necessary for its proper completion, in accordance with the Schedule for Technical Submittals shown in **Section 6.0, SC-51** and **Section10.0, Construction Details,** in a sequence that causes no delay in the Work, or in the work of BATA or any other BATA Contractor.

By approving and submitting working and shop drawings, alternative construction methods, product data, samples, or similar submittals, Contractor represents that it has determined and verified all related materials, measurements, and construction criteria, and that it has checked and coordinated the information contained within its submittals with the requirements of the Work and this Contract.

Contractor shall not be relieved of responsibility for any deviation from the requirements of this Contract by BATA's approval of shop and working drawings, product data, samples, plans, programs, schedules, or similar submittals unless Contractor has specifically informed BATA at the time of submittal in writing of the deviation and BATA has given written approval of the specific deviation. Contractor shall not be relieved of responsibility for errors or omissions in working and shop drawings, product data, samples, plans, programs, schedules or similar submittals by BATA's approval of the submittal. Contractor shall not deviate from approved working and shop drawings, product data, samples, or similar submittals without BATA's written approval.

Contractor shall not commence any portion of the Work requiring submission of shop or working drawings, product data, samples, or similar submittals until the required submittal has been approved by BATA.

Contractor shall direct specific attention, in writing or on resubmitted shop and working drawings, product data, samples, or similar submittals, to revisions other than those required by BATA on previous submittals.

Specific requirements for the submittal of shop and working drawings, product data and samples are contained in **Section 6.0, SC-6**, and **Section 7.0, GC-43**.

Full compensation for furnishing all working and shop drawings, product data and samples shall be considered as included in the prices paid for the various Contract items of Work to which such drawings relate and no additional compensation will be allowed.

GC-44 Not Used

GC-45 Protection and Restoration of Property

In addition to any other requirements imposed by law, Contractor shall shore up, brace, underpin, and protect as may be necessary, all foundations and other parts of all existing structures adjacent to and adjoining the site of the Work which are in any way affected by Contractor's operations. Whenever any notice is required to be given by BATA or Contractor to any adjoining or adjacent landowner or other party before beginning any Work under this Contract, such notice shall be given by Contractor.

Any damage arising from or in consequence of the performance of the Contract, to improvements or property, whether above or below ground, private or public, within or adjacent to the project limits, shall be repaired at once by Contractor. If the best interests of BATA require such repair to be made prior to the execution of any part of the Work included in this Contract, BATA will so notify Contractor who shall delay or discontinue the performance of that

part of the Work until the necessary repair has been made. Such delay shall not be considered unavoidable, and no extension of time for completion of the Contract will be made.

When ordered by BATA to make any such repair, Contractor shall start work thereon within four hours and shall prosecute the same with diligence to completion. Upon failure of Contractor to so comply with such order, or upon Contractor's failure to make immediate emergency repairs which are necessary in the best interests of BATA or of the Public, BATA shall have the authority to cause such repair to be made and to deduct the costs thereof from any money due, or which may become due Contractor.

In any emergency affecting the safety of life or property including adjoining property, Contractor, without special instructions or authorization from BATA, is authorized to act at Contractor's discretion to prevent such threatened loss or injury, and Contractor shall so act whether or not it is instructed to do so by BATA.

GC-46 Utility Paint Markings

Contractor shall completely remove all utility paint markings at project completion. Removal shall be by use of the high water pressure method only. Payment for removal of all utility paint markings shall be considered as included in the price paid for other items of work and no additional compensation will be allowed therefore.

GC-47 Not Used

GC-48 Inspection

BATA shall at all times have access to the Work and shall be furnished every reasonable facility for verifying that the materials and workmanship conform to the requirements of the Contract. BATA may test and inspect, either at Contractor's, subcontractor's or supplier's facility, all components, subsystems or workmanship prior to assembly of such components into the Work and prior to acceptance of the Work by BATA. Following such testing and inspection, BATA will issue a deficiency list to Contractor listing those items that fail to comply with the Contract. BATA may either reject or require correction of defective material, workmanship, or nonconformity to this Contract. Contractor shall, at its own expense, make available tools, pits, hoists, scaffolds, platforms, other equipment, facilities, drawings, and assistance as may be necessary for inspections or tests.

Costs of the Inspectors shall be borne by BATA and shall not be a part of the Contract Price. Costs of re-inspection shall be back charged to Contractor. The performance of, or the failure to perform, such inspection shall not relieve Contractor of any responsibility for complete Contract performance. Where shop inspection is required by the terms of the Contract, Contractor shall not ship materials until BATA releases such materials for shipment.

GC-49 Certificates of Compliance and Testing

49.1 General

BATA shall use certain methods for testing the quality of materials and work. These methods are identified by number and are referred to in the specifications as California Test. Copies of individual California Tests are available and will be furnished to interested persons upon request.

Whenever the specifications require compliance with specified values for the following properties, tests will be made by the California Test indicated unless otherwise specified:

Properties	*California Test*
Relative Compaction	216 or 231
Sand Equivalent	217
Resistance (R-value)	301
Grading (Sieve Analysis)	202
Durability Index	229

Whenever a reference is made in the specifications to a California Test by number, it shall mean the California Test in effect on the day the Notice of Award for the work is dated.

Whenever the specifications provide an option between two (2) or more tests, BATA will determine the test to be used.

Whenever a reference is made in the specifications to a specification, manual, or test designation either of the American Society of Testing and Materials, the American Association of State Highway and Transportation Officials, Federal Specifications, or any other recognized national organization, and the number or other identification representing the year of adoption or latest revision is omitted, it shall mean the specification, manual, or test designation in effect on the day the Notice to Bidders is dated. Whenever said specification manual or test designation provides for test reports (such as certified mill test reports) from the manufacturer, copies of such reports, identified as to the lot of material, shall be furnished to BATA. When material that cannot be identified with specific test reports is proposed for use, BATA may, at its discretion, select random samples from the lot for testing. Test specimens from the random samples, including those required for retest, shall be prepared in accordance with the referenced specification and furnished by Contractor at their own expense. The number of such samples and test specimens shall be entirely at the discretion of BATA.

When requested by BATA, Contractor shall furnish, without charge, samples of all materials entering into the work, and no material shall be used prior to approval by BATA, except as provided in **GC-49 Certificates of Compliance and Testing.** Samples of material from local sources shall be taken by or in the presence of BATA, otherwise the samples will not be considered for testing."

49.2 Certificates of Compliance

When so authorized in the Contract or when permitted by BATA, the use of certain materials or assemblies shall be allowed if accompanied by a Certificate of Compliance. BATA

reserves the right to refuse to permit the use of material on the basis of a Certificate of Compliance. If such use is permitted, the form of the Certificate of Compliance and its disposition shall be as directed by BATA. The certificate shall be signed by the manufacturer of the material or the manufacturer of assembled materials and shall be furnished with each lot of material delivered to the Work and the lot so certified must be clearly identified in the Certificate.

All materials used on the basis of a Certificate of Compliance may be sampled and tested by BATA at any time. The fact that material is used on the basis of a Certificate of Compliance shall not relieve Contractor of responsibility for incorporating material in the Work which conforms to the requirements of the Contract and any such material not conforming to such requirements will be subject to rejection whether in place or not.

49.3 Testing

Unless otherwise specified, BATA shall perform or cause to be performed all testing of materials and work in accordance with the tests specified in **Section 10.0, Construction Details** and the Standard Specifications. Contractor shall furnish without cost adequate samples of all materials necessary for testing, and shall also designate the source of such material where appropriate. Costs of the first test will be paid by BATA. If the material fails the first test, all subsequent tests until the material passes shall be paid by Contractor and such costs will be deducted from any moneys due or to become due Contractor.

GC-50 Removal of Rejected or Unauthorized Work

All work that has been rejected shall be remedied, or removed and replaced by Contractor in a manner acceptable to BATA, and no compensation will be made for such removal, replacement or remedial work.

Any work performed outside of the limits of Work shown on the drawings or established by BATA, or any extra work done without written authorization of BATA will not be paid for. Upon order of BATA such unauthorized work shall be remedied, removed or replaced at Contractor's expense.

If Contractor fails to comply promptly with any such order of BATA, BATA may cause the rejected or unauthorized work to be removed, replaced, or remedied, and to deduct the costs thereof from any moneys due to Contractor.

GC-51 Disposal of Materials

Except for materials generated pursuant to **GC-9, Hazardous Materials or Unusual Conditions**, Contractor shall be responsible for the disposal of all excess materials generated during the performance of this Contract. When any material is to be disposed of outside the project area, other than a public dump, Contractor shall first obtain a written permit from the property owner on whose property the disposal is to be made and he shall file with BATA said permit or a certified copy thereof together with a written release from the property owner absolving BATA from any and all responsibility in connection with the disposal of material and

said property, and before any material is disposed of on said property, Contractor shall obtain written permission from BATA to dispose of the material at the location designated in said permit.

GC-52 Protection of Completed Portions of Work

Contractor shall protect completed portions of the Work until final acceptance of the Work by BATA. Contractor shall take prompt action to remedy or repair any and all damage sustained to Work that is partially or wholly complete and has not yet been accepted by BATA.

GC-53 Cleanup

In addition to any requirements which may be included in **Section 10,** Contractor shall at all times during performance of Work under this Contract, keep the site clean from all rubbish and debris. Before final inspection of the Work, Contractor shall clean the material sites and all ground occupied by it in connection with the Work of all rubbish, excess materials, falsework, forms, temporary structures, and equipment. All parts of the Work shall be left in a neat and presentable condition.

GC-54 Redlined Construction Drawings

Drawings showing all approved changes made during construction which differ from the approved drawing set for construction, shall be furnished by Contractor prior to the acceptance of the Work. Final construction drawings submitted to BATA shall be in the form of redlined drawings clearly and neatly indicating all changes made with the approval of BATA and other field changes made which reflect the as-built condition of the Contract. During the construction period, redlined construction drawings shall be maintained by Contractor and made available to BATA for review on a daily basis.

GC-55 Final Inspection and Acceptance of All or a Portion of the Work

55.1 Final Inspection and Acceptance of all the Work

When Contractor considers that all of the Work, or any discrete portion of the Work covered under this Contract has reached final completion, Contractor shall so inform BATA in writing. If necessary and required, acceptance tests on the Work or discrete portion thereof will be performed as set forth in **Section 10.0 – Construction Details** and the Standard Specifications. BATA will prepare a punch list covering any part of the Work that fails to pass the acceptance tests or is otherwise unacceptable and will reject such work. Contractor shall proceed immediately to correct or replace unsatisfactory, incomplete or unacceptable work. For items of work not completed by Contractor BATA may proceed to have the items corrected or completed using BATA or third party forces. The costs of such corrections shall be deducted from compensation due Contractor.

Unless otherwise stipulated, title to such rejected work and risk of loss shall remain with Contractor, and Contractor shall have the responsibility and bear all costs to correct all defects or damage. All acceptance testing of Work which has been rejected previously shall be at Contractor's expense and costs incurred by BATA to perform such re-tests shall be deducted and withheld by BATA from payments otherwise due to Contractor.

Final acceptance of all of the Work or the particular discrete portion deemed complete will occur after successful completion of all testing, corrections of deficiencies, punch list items, and BATA's determination that the Work conforms in all respects to all the Contract requirements. BATA shall inform Contractor of such acceptance of the Work by issuing a final certificate stating that the Work has been completed in accordance with the Contract requirements and is accepted under the terms and conditions thereof. Acceptance of the Work will be made by BATA only upon issuance of said certificate together with a final estimate. After BATA has accepted the Work, Contractor will be relieved of the duty of maintaining and protecting the accepted Work and will not be required to perform any further work thereon; and Contractor shall be relieved of its responsibility for injury to persons or property or damage to the work that occurs after formal acceptance by BATA. Such final acceptance of the Work shall not relieve Contractor from responsibility for errors, improper fabrication, non-conformance to a Contract requirement, latent defects, or for deficiencies within Contractor's control. Unless otherwise stipulated, all warranties begin with the date of such final acceptance. Coincident with such final acceptance, BATA will record a Notice of Completion.

55.2 Final Inspection and Acceptance of a Portion of The Work

BATA retains the right to direct Contractor to complete a portion of the Work at a time different than that specified in the Contract or reflected in the currently approved progress schedule. Such direction will be in writing. If such direction modifies the amount of compensation or time required for the completion of the Work, a change order will be issued. The following will apply if BATA accepts, pays for, takes title to and occupies the portion of the Work so accepted:

1. Contractor will be relieved of maintenance responsibility for that portion of the Work.
2. Contractor's warranty on that portion of the Work will commence.

7.5 COMPENSATION, PAYMENTS, RECORDS AND AUDIT

GC-56 Compensation

Contractor shall accept the compensation set out in the Contract as full payment for:

1. furnishing all labor, materials, tools, equipment, and incidentals necessary to properly perform and satisfactorily complete all the Work included under this Contract;
2. all loss or damage arising from the nature of the Work, or from the action of the elements, or from any unforeseen difficulties which may be encountered during the prosecution of the Work until final acceptance by BATA;
3. all risks of every description connected with the prosecution of the Work, and for all expenses incurred in consequence of the suspension or discontinuance of the Work as provided in the Contract.

Neither the payment of any progress payment nor any retained percentage shall relieve Contractor of any obligation to make good any defective work or material.

No compensation will be made in any case for the loss of anticipated profits.

GC-57 Increased or Decreased Quantities and Quantity Variation

57.1 Increased or Decreased Quantities

For Items paid for on a unit price basis, increases or decreases in the quantity of an item of the Work will be determined by comparing the actual quantity of such item of the Work with the Quantity for that item of the Work in the Schedule of Quantities and Prices of the contract bid form.

57.2 Quantity Variation

If the actual quantity of any item of the Work paid for on a unit price basis varies from the Quantity for such item in the Schedule of Quantities and Prices of the contract bid form by 25 percent or less, payment for the item of the Work will be made at the contract unit price.

If the actual quantity of such a contract item of the Work exceeds the Quantity for such item in the Schedule of Quantities and Prices of the contract bid form by more than 25 percent, the compensation payable to the Contractor for the amount in excess of 125 percent of the Quantity will be reviewed by the Contractor and BATA, and an equitable adjustment may be made to the unit price for such excess amount by means of a Change Order to credit BATA with any reduction in cost or to compensate Contractor for any increase in cost resulting from the change in quantity. This review of the adjustment will be made at a time mutually acceptable to BATA and the Contractor. If the review results in no change in unit price, the record shall so state.

If the actual quantity of such a contract item of the Work is less than 75 percent of the Quantity for such item in the Schedule of Quantities and Prices of the contract bid form, the compensation payable to the Contractor will be reviewed by the Contractor and BATA, and an equitable adjustment may be made to the unit price for the entire quantity by means of a Change Order to credit BATA with any reduction in cost or to compensate the Contractor for any increase in cost resulting from the change in quantity. This review of the adjustment will be made at a time mutually acceptable to BATA and the Contractor. If the review results in no change in unit price, the record shall so state.

GC-58 Certified Payrolls

Contractor shall submit monthly for each week in which any Contract Work is performed, a certified copy of all payrolls for its employees and a certified copy of all of its subcontractor's payrolls, to BATA. The payrolls submitted shall be in a form acceptable to BATA.

GC-59 Invoicing and Progress Payments

Contractor will be paid for the value of all accepted quantities for the various items of work satisfactorily completed in accordance with the Contract and computed in accordance with the applicable measurement for payment provisions of the Contract. Before any payment becomes due, Contractor shall prepare for BATA's approval a schedule of values of the main categories of the Work included in any items paid for as a lump sum and any items for which partial payment for materials on hand will be made. Each item in the schedule of values shall include its proper share of overhead and profit. The values in the schedule shall be used only for determining the amount of each progress payment. A proposed schedule may be rejected if any item is determined by BATA to be unbalanced. BATA may request a detailed cost breakdown of such items.

Prior to the end of each payment period, Contractor shall prepare and forward to BATA a progress payment invoice in writing consisting of the value of the total amount of Work done plus the value of the acceptable materials on hand. Acceptable materials on hand consist of materials or equipment furnished and delivered by Contractor to the site but not yet incorporated in the Work and properly stored in a location acceptable to BATA. In order for materials on hand to be considered for payment, Contractor shall request payment for them on BATA-furnished forms accompanied by documentation as therein required including, but not limited to, evidence of purchase if appropriate.

BATA will retain **five percent** of such invoiced value as part security for the fulfillment of the Contract by Contractor, and shall pay to Contractor the balance not retained, after deducting therefrom all previous payments and all sums to be kept or retained under the provisions of the Contract. No such invoice or payment shall be construed to be an acceptance of any defective work or improper materials.

After 50% of the Contract Amount, as modified by any Change Orders, has been earned, and if satisfactory progress has been made in accordance with the approved Contract progress schedule, BATA will make the remaining progress payments in full, without retention. If, however, Contractor subsequently falls behind the approved Contract progress schedule, BATA may resume retention up to **five percent** of all progress payments, including those payments that were made in full.

In accordance with the provisions of applicable California law, Contractor may be permitted to substitute securities in lieu of the withholding from progress payments specified above. Substitutions shall be done in accordance with California Public Contract Code Section 22300 (see below).

Work completed in place shall be an estimate only, and no inaccuracy or error in said estimates shall operate to release Contractor or any Surety from damages arising from such Work or from enforcing each and every provision of this Contract, and BATA shall have the right to subsequently correct any error made in any invoice submitted for payment. No such invoice or payment shall be required to be made when, as determined by BATA, the Work is not proceeding in accordance with the provisions of the Contract, or when the total value of the Work done since the last estimate amounts to less than $500.00.

In addition to the amounts that BATA may retain as provided hereinabove, BATA may withhold additional amounts from any payments otherwise due to Contractor as it determines necessary to cover:

1. Payments which may be past due and payable for just claims against Contractor or any Subcontractor for labor or materials furnished in performance of the Work under the Contract;
2. For defective work not remedied;
3. For failure of Contractor to make proper payments to any of its Subcontractors;
4. A reasonable doubt that Contractor will complete the Work within the Contract time limits;
5. Damage to other work or property caused by Contractor or its Subcontractor of any tier; if applicable;
6. An amount, not less than 10 percent of the total progress payment, due to the failure to abate, within one (1) working day or immediately in cases of imminent danger, infractions of BATA's Injury Prevention Program (BATA/IPP), Contractor's Safety Plan, CAL/OSHA, FEDERAL OSHA, ANSI or other applicable safety standards;
7. An amount not to exceed 20 percent of the total progress payment, due to four or more repeated infractions in a single payment period of BATA/IPP, Contractor's Safety Plan CAL/OSHA, FEDERAL OSHA, ANSI and all other applicable safety standards.

Contractor shall not be entitled to have any payment estimates processed or be entitled to have any payment made for work performed so long as any lawful or proper direction concerning the Work or any portion thereof given by BATA remains uncomplied with.

Whenever BATA, in accordance herewith, withholds any moneys otherwise due Contractor, written notice of the amount withheld and the reasons therefore shall be given Contractor, and when Contractor removes the grounds for such withholding, BATA will pay Contractor the amount so withheld.

Progress payments shall be based on a four-week period as mutually agreed to by BATA.

Securities may be substituted in lieu of the withholding of progress payments in accordance with Public Contract Code § 22300, which states:

§ 22300 Substitution of Securities for Retentions; Escrow Account

(a) Provisions shall be included in any invitation for bid and in any contract documents to permit the substitution of securities for any moneys withheld by a public agency to ensure performance under a contract, however, substitution of securities provisions shall not be required in contracts in which there will be financing provided by the Farmers Home Administration of the United States Department of Agriculture pursuant to the Consolidated Farm and Rural Development Act (7 U.S.C. § 1921 et. seq.), and where federal regulations or policies, or both, do not allow the substitution of securities. At the request and expense of Contractor, securities equivalent to the amount withheld shall be deposited with the public agency, or with a state or federally chartered bank in this state as the escrow agent, who shall then pay those moneys to the Contractor. Upon satisfactory completion of the contract, the securities shall be returned to Contractor.

(b) Alternatively, Contractor may request and the Owner shall make payment of retentions earned directly to the escrow agent at the expense of Contractor. At the expense of Contractor, Contractor may direct the investment of the payments into securities and Contractor shall receive the interest earned on the investments upon the same terms provided for in this section for securities deposited by Contractor. Upon satisfactory completion of the contract, Contractor shall receive from the escrow agent all securities, interest, and payments received by the escrow agent from the owner, pursuant to the terms of this section.

(c) Securities eligible for investment under this section shall include those listed in Section 16430 of the Government Code, bank or savings and loan certificates of deposit, interest-bearing demand deposit accounts, standby letters of credit, or any other security mutually agreed to by Contractor and the public agency.

Contractor shall be the beneficial owner of any securities substituted for moneys withheld and shall receive any interest thereon.

Failure to include these provisions in bid and contract documents shall void any provisions for performance retentions in a public agency contract.

For purposes of this section, the term "public agency" shall include, but shall not be limited to, chartered cities.

(d)(1) Any Contractor who elects to receive interest on moneys withheld in retention by a public agency shall, at the request of any subcontractor, make that option available to the subcontractor regarding any moneys withheld in retention by the Contractor from the subcontractor. If the Contractor elects to receive the identical rate of interest received by the Contractor on any retention moneys withheld from the subcontractor by the Contractor, less any actual pro rata costs associated with administering and calculating that interest. In the event that the interest rate is a fluctuating rate, the rate for the subcontractor shall be determined by calculating the interest rate paid during the time that retentions were withheld from the subcontractor. If the Contractor elects to substitute securities in lieu of retention, then, by mutual consent of the Contractor and subcontractor, the subcontractor may substitute securities in exchange for the release of moneys held in retention by the Contractor.

(2) This subdivision shall apply only to those subcontractors performing more than five percent of the Contractor's total bid.

(3) No Contractor shall require any subcontractor to waive any provision of this section.

(e) The Legislature hereby declares that the provisions of this section are of statewide concern and are necessary to encourage full participation by Contractors and subcontractors in public contract procedures.

(f) The escrow agreement used hereunder shall be null, void, and unenforceable unless it is substantially similar to the following form:

ESCROW AGREEMENT FOR SECURITY DEPOSITS IN LIEU OF RETENTION

This Escrow Agreement is made and entered into by and between

_____ whose address is _____
hereinafter called "Owner,"
_____ whose address is _____
hereinafter called "Contractor" and _____, a state or federally chartered bank, whose address is _____ hereinafter called "Escrow Agent."
For the consideration hereinafter set forth, the Owner, Contractor, and Escrow Agent agree as follows:

(1) Pursuant to Section 22300 of the Public Contract Code of the State of California, Contractor has the option to deposit securities with Escrow Agent as a substitute for retention earnings required to be withheld by Owner pursuant to the Construction Contract entered into between the owner and Contractor for _____ in the amount of _____ dated _____ (hereinafter referred to as the "Contract"). Alternatively, on written request of Contractor, the owner shall make payments of the retention earnings directly to the Escrow Agent. When Contractor deposits the securities as a substitute for Contract earnings, the Escrow Agent shall notify the Owner within 10 days of the deposit. The market value of the securities at the time of the substitution shall be at least equal to the cash amount then required to be withheld as retention under the terms of the Contract between the owner and Contractor. Securities shall be held in the name of _____, and shall designate Contractor as the beneficial owner.

(2) The Owner shall make progress payments to Contractor for those funds which otherwise would be withheld from progress payments pursuant to the Contract provisions, provided that the Escrow Agent holds securities in the form and amount specified above.

(3) When the Owner makes payment of retentions earned directly to the Escrow Agent, the Escrow Agent shall hold them for the benefit of the Contractor until the time that the escrow created under this contract is terminated. The Contractor may direct the investment of the payments into securities. All terms and conditions of this agreement and the rights and responsibilities of the parties shall be equally applicable and binding when the Owner pays the Escrow Agent directly.

(4) Contractor shall be responsible for paying all fees for the expenses incurred by Escrow Agent in administering the Escrow Account and all expenses of the Owner. These expenses and payment terms shall be determined by the Owner, Contractor, and Escrow Agent.

(5) The interest earned on the securities or the money market accounts held in escrow and all interest earned on that interest shall be for the sole account of Contractor and shall be subject to withdrawal by Contractor at any time and from time to time without notice to the Owner.

(6) Contractor shall have the right to withdraw all or any part of the principal in the Escrow Account only by written notice to Escrow Agent accompanied by written authorization from the Owner to the Escrow Agent that Owner consents to the withdrawal of the amount sought to be withdrawn by Contractor.

(7) The Owner shall have a right to draw upon the securities in the event of default by Contractor. Upon seven days' written notice to the Escrow Agent from the owner of the default, the Escrow Agent shall immediately convert the securities to cash and shall distribute the cash as instructed by the Owner.

(8) Upon receipt of written notification from the owner certifying that the Contract is final and complete, and that Contractor has complied with all requirements and procedures applicable to the Contract, Escrow Agent shall release to Contractor all securities and interest on deposit less escrow fees and charges of the Escrow Account. The escrow shall be closed immediately upon disbursement of all moneys and securities on deposit and payments of fees and charges.

(9) Escrow Agent shall rely on the written notifications from the owner and Contractor pursuant to Sections (5) to (8), inclusive, of this agreement and the owner and Contractor shall hold Escrow Agent harmless from Escrow Agent's release and disbursement of the securities and interest as set forth above.

(10) The names of the persons who are authorized to give written notice or to receive written notice on behalf of the owner and on behalf of Contractor in connection with the foregoing, and exemplars of their respective signatures are as follows:

On behalf of Owner:
_____ (Title)
_____ (Name)
_____ (Signature)
_____ (Address)
On behalf of Contractor:
_____ (Title)
_____ (Name)
_____ (Signature)
_____ (Address)
On behalf of Escrow Agent:
_____ (Title)
_____ (Name)
_____ (Signature)
_____ (Address)

(11) Securities eligible for deposit by Contractor or investment hereunder shall be _____ and no others.

At the time the Escrow Account is opened, the Owner and Contractor shall deliver to the Escrow Agent a fully executed counterpart of this Agreement.

IN WITNESS WHEREOF, the parties have executed this Agreement by their proper officers on the date first set forth above.
_____ (Owner)

_____ (Title)
_____ (Name)
_____ (Signature)

_____ (Contractor)
_____ (Title)
_____ (Name)
_____ (Signature)

GC-60 Force Account Payment

If work is directed by BATA to be performed on a force account basis, compensation shall be made as set forth in this provision. Such payment shall constitute full compensation to Contractor for work directed to be performed on force account and no additional compensation will be allowed therefore. Labor, materials and equipment used in the performance of work on a force account basis shall be approved daily by BATA.

60.1 Work Performed by Contractor

Contractor will be paid the direct costs for labor, materials and equipment used in performing the Work as hereinafter provided except where agreement has been reached to pay in accordance with the **GC-60.7**. A markup may be added to the total of the direct costs computed as provided in **GC-60.2, 60.3, 60.4.** The added markup shall not exceed 20 percent of the cost of labor, 15 percent of the cost of material, 15 percent of the equipment rental and 5 percent of the cost of subcontractors.

The above markups shall constitute full compensation for all overhead costs (general overhead, supervision, office expenses, field office facilities, utilities, and transportation) that shall be deemed to include all items of expense not specifically designated as cost or equipment rental in accordance with the subsections entitled **"Labor," "Materials," and "Equipment Rental."**

When work paid for on a force account basis is performed by forces other than Contractor's organization, Contractor shall reach agreement with such other forces as to the distribution of the payment made by BATA for such work. No additional payment therefore will be made by BATA by reason of the performance of the Work by a subcontractor or other forces.

60.2 Labor

Contractor will be paid the cost of labor for the workmen (including foremen when authorized by BATA) used in the actual and direct performance of the Work. The cost of labor, whether the employer is Contractor, subcontractor, or other forces, will be the sum of the following:

1. **Actual Wages.** The actual wages paid shall include any employer payments to or on behalf of the workmen for health and welfare, pension, vacation, insurance, overtime, plus other additives in accordance with collective bargaining agreements.
2. **Labor Surcharge.** To the actual wages, as defined above, will be added a Labor Surcharge as set forth in the State of California Department of Transportation publication entitled *Labor Surcharge & Equipment Rental Rates,* which was in effect on the date upon which the Work was accomplished. Said labor surcharge shall constitute full compensation for all payments imposed by State and Federal laws and for all other payments made to, or on behalf of, the workmen, other than actual wages as defined above and the actual subsistence and travel allowance. Provided, however that any costs for workers compensation insurance provided by BATA shall be deducted from the above Labor Surcharge total.

60.3 Materials

BATA reserves the right to furnish such materials as it deems advisable, and Contractor shall have no claims for costs and markup on such materials. Only materials furnished by Contractor and necessarily used in the performance of the Work will be paid for. The cost of such materials will be the cost to the purchaser, whether Contractor, subcontractor or other forces, from the supplier thereof, except as the following are applicable:

1. If a cash or trade discount by the actual supplier is offered or available to the purchaser, it shall be credited to BATA notwithstanding the fact that such discount may not have been taken.
2. If materials are procured by the purchaser by any method which is not a direct purchase from and a direct billing by the actual supplier to such purchaser, the cost of such materials shall be deemed to be the price paid to the actual supplier as determined by BATA. No markup except for actual costs incurred in the handling of such materials will be permitted.
3. If the materials are obtained from a supply or source owned wholly or in part by the purchaser, payment therefore will not exceed the price paid by the purchaser for similar materials furnished from said source on contract items or the current wholesale price for such materials delivered to the jobsite, whichever price is lower.
4. If the cost of such materials is, in the opinion of BATA, excessive, then the cost of such material shall be deemed to be the lowest current wholesale price at which such materials are available in quantities concerned delivered to the jobsite, less any discounts as provided above.

60.4 Equipment Rental

Compensation for equipment used on force account work shall be determined from the latest schedule of equipment rental rates listed in the State of California, Department of Transportation, Business and Transportation Agency Publication, "L*abor Surcharge & Equipment Rental Rates*," and in use at the time the equipment is used. The equipment rental rates listed in said publication shall be used regardless of ownership and any rental or other agreement, if such may exist for the use of such equipment entered into by Contractor. If it is deemed necessary by BATA to use equipment not listed in the said publication, a suitable rental

rate for such equipment will be established by BATA prior to the work being done. Contractor shall furnish any cost data that might assist BATA in the establishment of such rental rate.

The rental rate paid as above provided shall include the cost of fuel, oil, lubrication, supplies, small tools, necessary attachments, repairs and maintenance of any kind, depreciation, storage, insurance and all incidentals.

Operators of rental equipment will be paid for as provided in the Subsection entitled **"Labor."**

All equipment shall, in the opinion of BATA, be in good working condition and suitable for the purpose for which the equipment is to be used.

Unless otherwise specified, manufacturer's ratings and manufacturer-approved modifications shall be used to classify equipment for the determination of applicable rental rates. Equipment that has no direct power unit shall be powered by a unit of at least the minimum rating recommended by the manufacturer.

Individual pieces of equipment or tools having a replacement value of $250 or less, whether or not consumed by use, shall be considered to be small tools and no payment will be made therefore.

Rental time will not be allowed while equipment is inoperative due to breakdowns.

60.5 Equipment at the Site of the work

The rental time to be paid for equipment on the Work shall be the time the equipment is in operation on the Work being performed, and in addition, shall include the time required to move the equipment to the location of the Work and return it to the original location or to another location requiring no more time than that required to return it to its original location, except that moving time will not be paid for if the equipment is used at the site of the Work on other than such work. Loading and transporting costs will be allowed, in lieu of moving time, when the equipment is moved by means other than its own power, except that no payment will be made if the equipment is used at the site of the Work on other than such Work. The following shall be used in computing the rental time of equipment on the Work:

1. When hourly rates are listed, less than thirty (30) minutes of operation shall be considered to be one-half hour of operation.
2. When daily rates are listed, less than four (4) hours of operation shall be considered to be one-half day of operation.

60.6 Equipment Not at the Site of the Work

For the use of equipment moved onto the site of the Work and used exclusively for work paid for on a force account basis Contractor will be paid the rental rates as determined in the Subsection entitled **"Equipment Rental"** and for the cost of transporting the equipment to the location of the Work and its return to its original location, all in accordance with the following provisions:

1. The original location of the equipment to be hauled to the location of the Work shall be agreed to by BATA in advance.
2. BATA will pay the cost of loading and unloading such equipment.
3. The cost of transporting equipment in low bed trailers shall not exceed the hourly rates listed in the State of California Department of Transportation publication entitled *Labor Surcharge & Equipment Rental Rates.*
4. The cost of transporting equipment shall not exceed the applicable minimum established rates of the Public Utilities Commission.

The rental period shall begin at the time the equipment is unloaded at the site of the Work, shall include each day that the equipment is at the site of the Work, excluding Saturdays, Sundays, and BATA holidays unless the equipment is used to perform the Work on such days, and shall terminate at the end of the day on which BATA directs Contractor to discontinue the use of such equipment. The rental time to be paid per day will be in accordance with the following:

Hours of Operation	Hours to Be Paid
0	4
0.5	4.25
1	4.5
1.5	4.75
2	5
2.5	5.25
3	5.5
3.5	5.75
4	6
4.5	6.25
5	6.5
5.5	6.75
6	7
6.5	7.25
7	7.5
7.5	7.75
8	8
Over 8	Actual hours in operation

The hours to be paid for equipment that is operated less than eight (8) hours due to breakdowns shall not exceed eight (8) less the number of hours the equipment is inoperative due to breakdowns.

When hourly rates are listed, less than thirty (30) minutes of operation shall be considered to be one-half hour of operation. When daily rates are listed, payment for one-half day will be made if the equipment is not used. If the equipment is used, payment will be made for one day. The minimum rental time to be paid for the entire rental period on an hourly basis shall not be less than eight (8) hours or if on a daily basis shall not be less than one day.

Should Contractor desire the return of the equipment to a location other than its original location, BATA will pay the cost of transportation in accordance with the above provisions, provided such payment shall not exceed the cost of moving the equipment to the Work.

Payment for transporting, and loading and unloading equipment, as provided above, will not be made if the equipment is used on the Work in any other way than upon Work paid for on a force account basis.

When work, other than work specifically designated as Work in the Contract Documents, is to be paid for on a force account basis and BATA determines that such work requires Contractor to move on to the site equipment which could not reasonable have been expected to be needed in the performance of the Contract, payment for the use of such equipment at equipment rental rates in excess of those listed as applicable for the use of such equipment will be made subject to the following additional conditions:

1. BATA shall specifically approve the necessity for the use of particular equipment on such Work.
2. Contractor shall establish to the satisfaction of BATA that such equipment cannot be obtained from its normal equipment source or sources and those of its subcontractors.
3. Contractor shall establish to the satisfaction of BATA that the proposed equipment rental rate for such equipment from its proposed source is reasonable and appropriate for the expected period of use.
4. BATA shall approve the equipment source and the equipment rental rate to be paid by BATA before Contractor begins work involving the use of said equipment.

60.7 Work Performed by Special Forces or Other Special Services

When BATA and Contractor, by mutual agreement, determine that a special service or an item or work cannot be performed by the forces of Contractor, or those of any of its subcontractors, such service or work item may be performed by a specialist. Invoices for such service or item of work, performed by a specialist on the basis of the current market price thereof, may be accepted without complete itemization of labor, material, and equipment rental costs when it is impracticable and not in accordance with the established practice of the special service industry to provide such complete itemization.

In those instances wherein a Contractor is required to perform work necessitating a fabrication or machining process in a fabrication or machine shop facility away from the jobsite, the charges for that portion of the Work performed in such a facility, may by mutual agreement, be accepted as a specialist billing.

In lieu of the percent markups provided above in the Subsection entitled **"Work Performed by Contractor"**, a 15 percent markup will be added to the specialist price, less a credit to BATA for any cash or trade discount offered or available, whether or not such discount may have been taken.

60.8 Owner-Operated Equipment

When "Owner-Operated Equipment" is used to perform work to be paid on a force account basis, Contractor will be paid for the equipment and operator, as follows:

1. Payment for the Equipment will be made in accordance with the Subsection 60.4 herein entitled **"Equipment Rental."**
2. Payment for the cost of labor and subsistence or travel allowance will be made at the rates paid by Contractor to other workmen operating similar equipment already on the project or, in the absence of such other workmen, at the rates for such labor established by collective bargaining agreements for the type of workmen and location of the Work, whether or not the "Owner-Operator" is actually covered by such an agreement. A labor surcharge will be added to the cost of labor described herein, in accordance with the provisions of Subsection 60.2 b entitled "**Labor Surcharge."**
3. To the direct cost of equipment rental and labor, computed as provided herein, will be added the markups for labor and equipment rental as provided in Subsection 60.1 entitled **"Work Performed by Contractor."**
4. If, at any time after Contractor commences the force account work, a method of compensation other than that specified in this Article has been agreed upon for the force account work or a portion of such work, such compensation shall be made in accordance with such agreement.

Contractor shall keep accurate daily records of the actual cost to Contractor for all work performed pursuant to this Article and shall make them available to BATA upon reasonable notice and request. Such records shall be maintained in such a manner so as to be completely discernible from records associated with the basic Contract scope.

GC-61 Prompt Payment

61.1 Payment to Contractor

Public Contract Code Section 20104.50 requiring prompt payment to Contractors is applicable to this contract. Undisputed and properly submitted payment requests shall be paid within thirty (30) days of receipt by BATA. Any undisputed and properly submitted payment request not paid within thirty (30) days shall accrue interest at the legal rate set forth in Code of Civil Procedure Section 685.010.

Any payment request determined by BATA not to be a proper payment request suitable for payment shall be returned to Contractor within seven days of receipt setting forth in writing the reasons why the payment request is not proper.

61.2 Payment to Subcontractors

Contractor shall adhere to all federal and California prompt payment laws and regulations including Business and Professions Code Section 7108.5 requiring Contractor to pay subcontractors within ten (10) days of receipt of each progress payment to the extent of each subcontractor’s interest therein, unless otherwise agreed to in writing.

Notwithstanding the time for payment of retention provided for in Public Contract Code Section 7107(d), Contractor shall pay retention proceeds to subcontractors within thirty (30) days

after the subcontractor's work is satisfactorily completed, unless the time for payment calculated pursuant to Section 7107(d) would result in earlier payment of retention to the subcontractor.

GC-62 Final Payment

Final payment shall not become due until the following actions have been satisfactorily completed:

1. Satisfactory completion of final inspection of all the Work under the Contract and the issuance by BATA of a Letter of Final Acceptance.
2. The recording of a Notice of Completion by BATA.
3. Contractor submittal to BATA of:
   a. An affidavit that all payrolls, bills for materials and equipment, and other indebtedness connected with the Work have been paid or otherwise satisfied, and
   b. A release of liens and claims arising out of the Contract, to the extent and in the form designated by BATA. If a claim remains unsatisfied after all payments are made, Contractor shall reimburse BATA for all monies that BATA may be compelled to pay in discharging the claim, including all costs and reasonable attorney's fees.

BATA may at its option and at any time retain out of any amounts due Contractor, sums sufficient to cover claims, filed pursuant to Section 3179 et seq. of the Civil Code.

BATA will make final payment, including outstanding retention, within **30-60 calendar days** of the recording of the Notice of Completion.

The acceptance of final payment by Contractor shall constitute a waiver of all claims against BATA arising under the Contract.

GC-63 Project Records

Comprehensive records and documentation relating to this project shall be kept by Contractor. The records shall include, but are not limited to Contract Documents, Drawings, Specifications, Addenda, Shop Drawings and Submittals, Change Orders, Modifications, Test Records, redlined construction plans, As-Built Drawings, and cost and pricing data. Contractor shall maintain a complete set of records relating to this Contract for a period of seven years from final payment for this Work. The cost records shall be complete and in sufficient detail to allow evaluation of the accuracy and completeness, and currency of the costs or prices. Contractor shall permit the authorized representatives of BATA to examine and audit all such records and any subcontracts under this Contract during the time period so specified. In addition, every contract involving the expenditure of public funds in excess of ten thousand dollars ($10,000) entered into by a public entity in the State of California shall be subject to the examination and audit of the State Auditor, at the request of the public entity or as part of any audit of the public entity, for a period of three years after final payment under the contract.

7.6 CONTRACT MODIFICATIONS, DISPUTES AND CLAIMS

GC-64 Not Used

GC-65 Change Requests and Change Notices

65.1 Change Requests.

Contractor may make a written request to BATA to modify the Contract (Change Request) based upon the receipt of, or the discovery of information that changes the scope, price, schedule, level of performance, or other facet of the Contract.

Contractor shall deliver a document entitled **"Change Request"** to BATA within 30 calendar days after receipt of, or the discovery of, information (other than receipt of a **"Change Notice"**) that Contractor believes will cause a change to the scope, price, schedule, level of performance, or other facet of the Contract. Upon receipt of a Change Notice, Contractor shall follow the procedures of **GC-65.2**. All Change Requests, and any Claims based thereon including any request or claim for cumulative impact costs shall be deemed waived unless a Change Request is delivered to BATA within the 30 calendar days specified herein.

The Change Request shall include information necessary to substantiate the effect of the change and any impacts to the work, including any change in schedule or Contract Price, and shall include all existing documentation or a description of anticipated documentation. In addition, the Change Request shall contain a detailed description of the proposed adjustment to the Contract Price or currently approved progress schedule, or both, and shall reference any other provisions of the Contract that will require modification because of the change. If a Change Request proposes an adjustment in the Contract Price, upon request of BATA, Contractor shall submit a complete breakdown of costs including detailed pricing information and back up for all work and any impacts thereto contemplated by the change.

The unavailability of all information necessary to quantify the change shall not excuse the timely submission of the Change Request. Contractor shall supplement the Change Request with additional information or documentation, as it becomes available. If BATA has not received sufficient substantiating documentation or information within a reasonable time after receipt of the Change Request, such insufficiency may be grounds to deny the Change Request.

If a Change Request or portions thereof are acceptable to BATA, BATA will issue a Contract Change Order consistent therewith. If a Change Request or portions thereof are not acceptable to BATA, BATA shall notify the Contractor in writing.

Any request by Contractor to modify the contract must first be submitted to BATA and proceed as a Change Request pursuant to these provisions. The Contractor may submit the matter as a Claim pursuant to GC 68, Claims only if, i) the Change Request has been denied by BATA in whole or in part, or ii) the Change Request has not been resolved within 90 days after receipt by BATA.

In the event of a dispute, Contractor shall proceed with the Work without delay, as directed by BATA.

65.2 Change Notice

BATA may, at any time during performance of the Contract notify Contractor of changes to the Contract by issuing a **Change Notice** to that effect. Contractor shall, within 15 calendar days after receipt of such Change Notice, provide to BATA a written response identifying any proposed adjustment in Contract Price, including any adjustment for cumulative impact costs and schedule to perform the changes identified in the Change Notice, unless another time period for response is specified in the Change Notice. BATA shall then issue an appropriate Change Order.

If BATA directs Contractor to perform additional work, the basis for compensation for such work shall be either: 1) extension of Contract items, 2) negotiated lump sum price, or 3) force account, as determined by BATA. The markups described in **GC-60.1** shall be the maximum allowed for all additional work directed by BATA.

If the Contractor and BATA cannot agree on the appropriate adjustment to the Contract Price or schedule, Contractor may either accept BATA's determination or identify and submit the matter as a Claim pursuant to the provisions of **GC 68,** Claims. In the event of a dispute, Contractor shall proceed with the Work without delay as directed by BATA.

GC-66 Change Order

A Change Order is a written document issued by BATA, that:

1. Changes the Contract Price, as modified by any previously executed Change Orders, or
2. Alters the scope of Work under the Contract, or
3. Alters the schedule for performance of the Work under the Contract as set forth in the currently approved schedule, or
4. Makes any other change to the Contract, or makes a combination of any of the aforementioned Contract changes.

GC-67 Differing Site Conditions

67.1 Soil Boring or Other Data

Where BATA has included soil boring information or other data in the Contract, they are included for Contractor's information only and BATA does not guarantee the accuracy of the information contained therein.

67.2 Notice of Differing Conditions

Contractor shall promptly and before such conditions are disturbed, notify BATA in writing of subsurface or latent physical conditions at the site differing materially from those indicated in the Contract, or unknown physical conditions at the site, of any unusual nature, differing materially from those ordinarily encountered and generally recognized as inherent in work of the character provided for in this Contract.

All Change Requests involving differing site conditions and any Claims based thereon shall be deemed waived unless the Contractor has given written notice before the conditions are disturbed as specified herein.

BATA will, as soon as practicable, investigate or cause to be investigated the items noted by Contractor and, if it is determined that such conditions do materially so differ and cause an increase or decrease in Contractor's cost of or time required for the performance of any part of the Work under the Contract, whether or not changed as a result of such conditions, an equitable adjustment will be made and the Contract modified.

GC-68 Claims

68.1 Claim Defined

"Claim" means a separate demand by Contractor for (A) a time extension, (B) payment of money or damages arising from work done by, or on behalf of, Contractor pursuant to the Contract and payment of which is not otherwise expressly provided for or that Contractor is not otherwise entitled to, or (C) an amount the payment of which is disputed by BATA.

68.2 Claim Requirements

1. Any submittal intended by the Contractor to be evaluated by BATA as a Claim shall be entitled "Claim".
2. All claims shall be submitted by the Contractor within thirty (30) days after the date of the event giving rise to the Claim, such as, for example, the denial by BATA of a Change Request, the failure of BATA to respond to a Change Request within ninety (90) days after receipt of required substantiating information and documentation, or the issuance by BATA of a disputed Change Order. Any Claim not submitted within the specified thirty (30) days shall be deemed waived.
3. Claims shall be in writing and must be submitted with all documents necessary to substantiate the Claim. A Claim must state in as much detail as possible the basis for the Claim and the additional compensation or extra time to which Contractor believes it is entitled. If the Claim is silent regarding entitlement to extra time, Contractor shall be entitled to no extra time in connection with the Claim. If the Claim is silent regarding additional compensation, Contractor shall be entitled to no additional compensation in connection with the Claim.
4. Contractor must notify BATA promptly in writing of any changes in its estimates of additional compensation or extra time, and the notification must state the reasons for the changes.
5. All Claims and any amendments thereto shall include the fully executed certification set forth below. Any Claim submitted without a fully executed certification shall be rejected by BATA and returned to the Contractor.

I,_____, BEING THE_____(MUST BE AN OFFICER) OF_____(CONTRACTOR), DECLARE UNDER PENALTY OF PERJURY UNDER THE LAWS OF THE STATE OF CALIFORNIA, AND DO PERSONALLY CERTIFY AND ATTEST THAT I HAVE THOROUGHLY REVIEWED THE ATTACHED CLAIM FOR ADDITIONAL COMPENSATION AND/OR EXTENSION OF TIME, AND KNOW ITS

CONTENTS, AND SAID CLAIM IS MADE IN GOOD FAITH; THE SUPPORTING DATA IS TRUTHFUL AND ACCURATE; THAT THE AMOUNT REQUESTED ACCURATELY REFLECTS THE CONTRACT ADJUSTMENT FOR WHICH THE CONTRACTOR BELIEVES THE OWNER IS LIABLE; AND, FURTHER, THAT I AM FAMILIAR WITH CALIFORNIA PENAL CODE SECTION 72 AND CALIFORNIA GOVERNMENT CODE 12650, *ET SEQ.*, PERTAINING TO FALSE CLAIMS, AND FURTHER KNOW AND UNDERSTAND THAT SUBMISSION OR CERTIFICATION OF A FALSE CLAIM MAY LEAD TO FINES, IMPRISONMENT, AND/OR OTHER SEVERE LEGAL CONSEQUENCES.

By_____

6. No Claims shall be filed later than the date of final payment.

68.3 Claim Review

BATA shall respond in writing to Contractor's Claim within forty-five (45) calendar days after BATA's receipt of the Claim or BATA may request in writing, within 30 days of receipt of the Claim, any additional information or documentation supporting the Claim or relating to defenses to the Claim BATA may have against the Contractor. For claims exceeding $375,000 BATA may, at its option, notify Contractor of extended time periods for review and response.

BATA's written response to the Claim, as further documented, shall be submitted to Contractor within fifteen (15) days after receipt of the further information or documentation or within a period of time no greater than that taken by the Contractor in producing the additional information, whichever is greater.

68.4 Meet and Confer

If Contractor disputes BATA's written response, or if BATA fails to respond within the time prescribed, Contractor may so notify BATA, in writing, either within fifteen (15) days of receipt of BATA's response or within fifteen (15) days of BATA's failure to respond within the time prescribed, respectively, and demand an informal conference to meet and confer for settlement of the issues in dispute. Upon a demand, BATA shall schedule a meet and confer conference within thirty (30) days for settlement of the dispute.

Following the meet and confer conference, if the Claim or any portion remains in dispute, Contractor may file a Government Code claim as provided in Chapter 1 (commencing with Section 910) of Part 3 of Division 3.6 of Title 1 of the Government Code. For purposes of those provisions, the running of the period of time within which a Government Code claim must be filed shall be tolled from the time Contractor submits its written Claim pursuant to the above provisions until the time the Claim is denied as a result of the meet and confer process, including any period of time utilized by the meet and confer process.

The above procedures do not apply to Government Code claims for tort damages and are not intended, and shall not be construed, to change the time for filing such claims.

68.5 Procedures for Civil Actions

Public Contract Code Section 20104.4, set forth below, establishes the following procedures for all civil actions filed to resolve claims of $375,000 or less under this Contract:

(a) Within 60 days, but no earlier than 30 days, following the filing of responsive pleadings, the court shall submit the matter to nonbinding mediation unless waived by mutual stipulation of both parties. The mediation process shall provide for the selection within 15 days by both parties of a disinterested third person as mediator, shall be commenced within 30 days of the submittal, and shall be concluded within 15 days from the commencement of the mediation unless a time requirement is extended upon a good cause showing to the court or by stipulation of both parties. If the parties fail to select a mediator within the 15-day period, any party may petition the court to appoint the mediator.

(b) (1) If the matter remains in dispute, the case shall be submitted to judicial arbitration pursuant to Chapter 2.5 (commencing with Section 1141.10) of Title 3 of Part 3 of the Code of Civil Procedure, notwithstanding Section 1141.11 of that code. The Civil Discovery Act of 1986 (Article 3 (commencing with Section 2016) of Chapter 3 of Title 3 of Part 4 of the Code of Civil Procedure) shall apply to any proceeding brought under this subdivision consistent with the rules pertaining to judicial arbitration.

(2) Notwithstanding any other provision of law, upon stipulation of the parties, arbitrators appointed for purposes of this article shall be experienced in construction law, and, upon stipulation of the parties, mediators and arbitrators shall be paid necessary and reasonable hourly rates of pay not to exceed their customary rate, and such fees and expenses shall be paid equally by the parties, except in the case of arbitration where the arbitrator, for good cause, determines a different division. In no event shall these fees or expenses be paid by state or county funds.

(3) In addition to Chapter 2.5 (commencing with Section 1141.10) of Title 3 of Part 3 of the Code of Civil Procedure, any party who after receiving an arbitration award requests a trial de novo but does not obtain a more favorable judgment shall, in addition to payment of costs and fees under that chapter, pay the attorney's fees of the other party arising out of the trial de novo.

(c) The court may, upon request by any party, order any witnesses to participate in the mediation or arbitration process.

The above claims procedures are also subject to Public Contract Code § 20104.6, which provides:

(a) No local agency shall fail to pay money as to any portion of a claim that is undisputed except as otherwise provided in the contract.
(b) In any suit filed under Section 20104.4, the local agency shall pay interest at the legal rate on any arbitration award or judgment. The interest shall begin to accrue on the date the suit is filed in a court of law.

7.7 SUSPENSION OF WORK, CONTRACT TERMINATION

GC-69 Suspension of the Work

In addition to the right of BATA to suspend Work under any other provision of this Contract, BATA may require Contractor to suspend all or part of the Work called for by this Contract at any time for up to **ninety (90) days** after a written Suspension Order is delivered to Contractor, and for any further period to which the parties may agree. The Suspension Order shall include the following:

1. A clear description of the Work to be suspended;
2. Guidance as to the action to be taken on subcontracts; and
3. Other requests for minimizing costs.

Upon receipt of a Suspension Order, Contractor shall comply with its terms immediately and take all reasonable steps to minimize cost allocable to the Work covered by the Order during the period of work stoppage. Within the period specified by the Order, or within any extension of that period to which the parties may agree, BATA may:

1. Terminate the Work covered by the Order as set forth in this section.
2. Cancel the Suspension Order; or
3. Allow the period of the Suspension Order to expire.

Contractor shall resume work upon the cancellation or expiration of a Suspension Order. An equitable adjustment shall be made in the Work scope, Contract Price, or Contract time, as appropriate, and the Contract shall be modified in writing in accordance with **GC-32, Excusable Delays and Extensions of Time** and **GC-69, Suspension of the Work** if:

1. The Suspension Order results in an increase in the time required for, or in Contractor's cost properly allocable to, the performance of any part of this Contract; and
2. Contractor asserts a claim for an adjustment within 30 days after the end of the period of work stoppage; and
3. The Suspension Order was not caused by Contractor's default or other act or omission within the control or responsibility of Contractor.

In preparation for and during suspensions of work, Contractor shall take every reasonable precaution to prevent damage to or deterioration of the Work. Contractor shall repair or replace, at no cost to BATA, Work that is damaged or deteriorated during a work suspension due to Contractor's failure to comply with this duty. If BATA determines that Contractor is not taking reasonable precautions and Contractor fails to take the corrective action within five days after written notice from BATA, BATA may cause such action to be taken and recover the reasonable cost thereof from Contractor.

GC-70 Termination for Convenience or in the Public Interest

BATA may terminate this Contract in whole or in part at any time by written notice to Contractor if BATA determines that termination is in the best interest of BATA or the public. If this Contract is so terminated, Contractor shall be entitled to payment for all Work performed acceptably, all acceptable goods or services ordered by and delivered to Contractor before termination, and all reasonable termination costs, up to the maximum amount payable under this Contract, provided that Contractor provides a final itemized invoice for the above amounts within thirty (30) days after receiving the termination notice.

GC-71 Termination for Default

BATA may, by written notice of default to Contractor, terminate Contractor's right to proceed with the Work under the Contract, in whole or with regard to any part if Contractor does not cure or failure to comply with the term of the contract within a period of seven days (or such longer period as BATA may authorize in writing) after receipt of notice from BATA specifying such failure, including, but not limited to, the following:

1. if Contractor fails to supply an adequate working force, or materials of proper quality, or otherwise refuses or fails to prosecute the Work, or any separable part thereof, with such diligence as will ensure its completion within the time specified in this Contract, or authorized extension thereof; or
2. if Contractor fails to make prompt payment to its subcontractors or suppliers upon receipt of progress payments from BATA; or
3. if Contractor persistently disregards laws, ordinances, or instructions of BATA.

In the event of such termination for default, BATA may take over the Work and prosecute the same to completion, by contract or otherwise, and may take possession of and use all or any part of Contractor's material, tools, equipment, and appliances as may be on the site of the Work and which are necessary for performance of the Work. Upon completion of such work, Contractor is entitled to return of all unused materials and its equipment, tools and appliances, except that there shall be no claim on account of usual and ordinary depreciation, loss, or wear and tear.

If Contractor's right to proceed is so terminated, Contractor shall not be entitled to receive any further payment until the Work is completed. Contractor and its surety(s) shall be liable to BATA for any additional costs of completion of the Work, including compensation for additional managerial and administrative services, plus liquidated damages accruing under the terms of this Contract from the Contract completion date, as extended by authorized time extensions, to the date of final completion.

If, after termination for failure to fulfill contract obligations, it is determined that the Contractor was not in default, the rights and obligations of the parties shall be the same as if the termination had been issued for the convenience of BATA.

GC-72 Contractor's Duties Upon Termination

After receipt of a Notice of Termination, either for default or convenience, Contractor shall:

1. stop work under the Contract on the date and to the extent specified in the Notice of Termination;
2. place no further orders or subcontracts for materials, services, or facilities, except as may be necessary for completion of such portion of the Work under the Contract as is not terminated;
3. terminate all orders and subcontracts to the extent that they relate to the performance of Work terminated by the Notice of Termination

4. assign to BATA in a manner, at the times, and to the extent directed by BATA, all of the right, title, and interest of Contractor under the orders and subcontracts so terminated.

7.8 WARRANTY PROVISIONS

GC-73 Warranty

It is a condition of this Contract that the equipment, materials or design furnished, and workmanship performed by the Contractor or any subcontractor or supplier at any tier, shall conform to the requirements of this contract and shall be free of any defect. Neither inspection, testing and acceptance by BATA of such equipment, materials, design or work performed, partial or final payment, nor any provisions of the Contract shall relieve the Contractor from responsibility for any latent defect, gross mistakes or fraud. The Contractor and its surety(s) shall warrant, regardless of the warranties obtained from the Subcontractors, all equipment, materials, design and workmanship for a period of one year from the date of Final Acceptance by BATA of all of the work under the Contract or any discrete portion thereof. The Contractor's warranty with respect to work repaired or replaced shall also run for one year from the date of repair or replacement. In addition, the Contractor shall furnish a written guarantee covering all or certain items of work and shall extend any warranty from a subcontractor or supplier that exceeds the above warranty period. If such additional or varying guarantees are required, they will be specified in Section 6.0 - Special Conditions of this contract. BATA retains the right, at its sole discretion, to assign to a third Party any warranty received under this Contract. .

GC-74 Warranty Work

The Contractor is responsible for all warranty-covered repair work during the warranty period as specified above. The Contractor shall provide at its own expense, all spare products and tools required for repairs. To the extent practicable, BATA will allow the Contractor or its designated representative to perform such work. When warranty repairs are required, BATA and the Contractor's representative shall agree on the most appropriate remedy to be performed within a reasonable time. If the Contractor fails to remedy any failure or defect within a reasonable time, BATA shall have the right to replace, repair, or otherwise remedy the failure or defect at the Contractor's expense. At its discretion, BATA may also perform such work if it deems necessary to do so to meet its operational commitments or other requirements. The Contractor shall reimburse BATA of all expenses for such work including materials and labor. The hourly shop labor rates shall be based on BATA's current labor cost accounting system. The Contractor shall reimburse BATA for such work within sixty days of receipt of warranty claim.

GC-75 Warranty on Replaced Parts

Any materials, parts or components that are used for replacement under the initial warranty period shall be warranted again for the total original warranty period of the replaced particular material, part or component.

GC-76 Systematic Failures

In the event that, during the warranty period, repairs or modifications necessitated by defective design, material, or workmanship occur to an extent in excess of 10 percent of the components used for the same function in the same assembly or subsystem purchased under this Contract, the Contractor shall promptly furnish all necessary labor and material to effect such repairs and modifications for every system delivered under the Contract under the terms and conditions outlined, including systems in which the item has not yet failed. When requested by BATA, the Contractor will be required to provide a written failure analysis report for defective products supplied under this contract and which occurred during the warranty period. The report shall be received by BATA within forty-five (45) days from the date of request.

GC-77 Iron Contracting Act of 2010

AB 1650, Iran Contracting Act of 2010, which adds Sections 2200 et seq. to the California Public Contract Code, requires Proposers for contracts equal to or in excess of one million dollars ($1,000,000) to certify, at the time of proposal submission that proposer is not identified on a list created pursuant to subdivision (b) of Section 2203 as a person engaging in investment activities in Iran described in subdivision (a) of Section 2202.5, or as a person described in subdivision (b) of Section 2202.5, as applicable. Submit a signed Bid Form #5, Iran Contracting Act Document.

SECTION 8. MISCELLANEOUS

8-1 Prequalified and Tested Signing and Delineation Materials

The Department maintains the following list of Prequalified and Tested Signing and Delineation Materials. The Engineer shall not be precluded from sampling and testing products on the list of Prequalified and Tested Signing and Delineation Materials.

The manufacturer of products on the list of Prequalified and Tested Signing and Delineation Materials shall furnish the Engineer a Certificate of Compliance in conformance with the provisions in Section 6-1.07, "Certificates of Compliance," of the Standard Specifications for each type of traffic product supplied.

For those categories of materials included on the list of Prequalified and Tested Signing and Delineation Materials, only those products shown within the listing may be used in the work. Other categories of products, not included on the list of Prequalified and Tested Signing and Delineation Materials, may be used in the work provided they conform to the requirements of the Standard Specifications.

Materials and products may be added to the list of Prequalified and Tested Signing and Delineation Materials if the manufacturer submits a New Product Information Form to the New Product Coordinator at the Transportation Laboratory. Upon a Departmental request for samples, sufficient samples shall be submitted to permit performance of required tests. Approval of materials or products will depend upon compliance with the specifications and tests the Department may elect to perform.

Pavement Markers, Permanent Type

Retroreflective With Abrasion Resistant Surface (ARS)

1. Apex, Model 921AR (4" x 4")
2. Ennis Paint, Models C88 (4" x 4"), 911 (4" x 4") and C80FH
3. Ray-O-Lite, Models "AA" ARC II (4" x 4") and ARC Round Shoulder (4" x 4")
4. 3M Series 290 (3.5" x 4")
5. 3M Series 290 PSA
6. Glowlite, Inc Model 988AR (4" x 4")

Retroreflective With Abrasion Resistant Surface (ARS)
(for recessed applications only)

1. Ennis Paint, Model 948 (2.3" x 4.7")
2. Ennis Paint, Model 944SB (2" x 4")*
3. Ray-O-Lite, Model 2002 (2" x 4.6")
4. Ray-O-Lite, Model 2004 (2" x 4")*

*For use only in 4.5 inch wide (older) recessed slots

Non-Reflective, 4-inch Round

1. Apex Universal (Ceramic)
2. Apex Universal, Models 929 (ABS) and 929PP (Polypropylene)
3. Glowlite, Inc. (Ceramic) and PP (Polypropylene)

4. Hi-Way Safety, Inc., Models P20-2000W and 2001Y (ABS)
5. Interstate Sales, "Diamond Back" (Polypropylene)
6. Novabrite Models Cdot (White) Cdot-y (Yellow), Ceramic
7. Novabrite Models Pdot-w (White) Pdot-y (Yellow), Polypropylene
8. Three D Traffic Works TD10000 (ABS), TD10500 (Polypropylene)

Pavement Markers, Temporary Type

Temporary Markers For Long Term Day/Night Use (180 days or less)

1. Vega Molded Products "Temporary Road Marker" (3" x 4")
2. Filtrona Extrusion, Halftrack model 25, 26 and RPM 35

Temporary Markers For Short Term Day/Night Use (14 days or less)
(For seal coat or chip seal applications, clear protective covers are required)

1. Apex Universal, Model 932
2. Filtrona Extrusion, Models T.O.M., T.R.P.M., and "HH" (High Heat)
3. Hi-Way Safety, Inc., Model 1280/1281
4. Glowlite, Inc., Model 932

Striping And Pavement Marking Material

Permanent Traffic Striping and Pavement Marking Tape

1. Advanced Traffic Marking, Series 300 and 400
2. Brite-Line, Series 1000
3. Brite-Line, "DeltaLine XRP"
4. Swarco Industries, "Director 35" (For transverse application only)
5. Swarco Industries, "Director 60"
6. 3M, "Stamark" Series 380 and 5730
7. 3M, "Stamark" Series 420 (For transverse application only)

Temporary (Removable) Striping and Pavement Marking Tape (180 days or less)

1. Advanced Traffic Marking, Series 200
2. Brite-Line, Series 100
3. Garlock Rubber Technologies, Series 2000
4. P.B. Laminations, Aztec, Grade 102
5. Swarco Industries, "Director-2"
6. Trelleborg Industries, R140 Series
7. 3M Series 620 "CR", and Series A750
8. 3M Series A145, Removable Black Line Mask
   (Black Tape: for use only on Hot mix asphalt surfaces)
9. Advanced Traffic Marking Black "Hide-A-Line"
   (Black Tape: for use only on Hot mix asphalt surfaces)
10. Brite-Line "BTR" Black Removable Tape
    (Black Tape: for use only on Hot mix asphalt surfaces)
11. Trelleborg Industries, RB-140
    (Black Tape: for use only on Hot mix asphalt surfaces)

Preformed Thermoplastic (Heated in place)

1. Flint Trading Inc., "Hot Tape"
2. Flint Trading Inc., "Premark Plus"
3. Ennis Paint Inc., "Flametape"

Ceramic Surfacing Laminate, 6" x 6"

1. Highway Ceramics, Inc.

Class 1 Delineators

One Piece Driveable Flexible Type, 66-inch

1. Filtrona Extrusion, "Flexi-Guide Models 400 and 566"
2. Carsonite, Curve-Flex CFRM-400
3. Carsonite, Roadmarker CRM-375
4. FlexStake, Model 654 TM
5. GreenLine Model CGD1-66

Special Use Type, 66-inch

1. Filtrona Extrusion, Model FG 560 (with 18-inch U-Channel base)
2. Carsonite, "Survivor" (with 18-inch U-Channel base)
3. Carsonite, Roadmarker CRM-375 (with 18-inch U-Channel base)
4. FlexStake, Model 604
5. GreenLine Model CGD (with 18-inch U-Channel base)
6. Impact Recovery Model D36, with #105 Driveable Base
7. Safe-Hit with 8-inch pavement anchor (SH248-GP1)
8. Safe-Hit with 15-inch soil anchor (SH248-GP2) and with 18-inch soil anchor (SH248-GP3)

Surface Mount Type, 48-inch

1. Bent Manufacturing Company, Masterflex Model MFEX 180-48
2. Carsonite, "Channelizer"
3. FlexStake, Models 704, 754 TM, and EB4
4. Impact Recovery Model D48, with #101 Fixed (Surface-Mount) Base
5. Three D Traffic Works "Channelflex" ID No. 522248W

Channelizers

Surface Mount Type, 36-inch

1. Bent Manufacturing Company, Masterflex Models MF-360-36 (Round) MF-180-36 (Flat) and MFEX 180—36
2. Filtrona Extrusion, Flexi-Guide Models FG300PE, FG300UR, and FG300EFX
3. Carsonite, "Super Duck" (Round SDR-336)
4. Carsonite, Model SDCF03601MB "Channelizer"
5. FlexStake, Models 703, 753 TM, and EB3

6. GreenLine, Model SMD-36
7. Hi-way Safety, Inc. "Channel Guide Channelizer" Model CGC36
8. Impact Recovery Model D36, with #101 Fixed (Surface-Mount) Base
9. Safe-Hit, Guide Post, Model SH236SMA and Dura-Post, Model SHL36SMA
10. Three D Traffic Works "Boomerang" 5200 Series

Lane Separation System

1. Filtrona Extrusion, "Flexi-Guide (FG) 300 Curb System"
2. Qwick Kurb, "Klemmfix Guide System"
3. Dura-Curb System
4. Tuff Curb

Conical Delineators

42-inch

(For 28-inch Traffic Cones, see Standard Specifications)

1. Bent Manufacturing Company "T-Top"
2. Plastic Safety Systems "Navigator-42"
3. TrafFix Devices "Grabber"
4. Three D Traffic Works "Ringtop" TD7000, ID No. 742143
5. Three D Traffic Works, TD7500
6. Work Area Protection Corp. C-42

Object Markers

Type "K", 18-inch

1. Filtrona Extrusion, Model FG318PE
2. Carsonite, Model SMD 615
3. FlexStake, Model 701 KM
4. Safe-Hit, Model SH718SMA

Type "Q" Object Markers, 24-inch

1. Bent Manufacturing "Masterflex" Model MF-360-24
2. Filtrona Extrusion, Model FG324PE
3. Carsonite, "Channelizer"
4. FlexStake, Model 701KM
5. Safe-Hit, Models SH824SMA_WA and SH824GP3_WA
6. Three D Traffic Works ID No. 531702W and TD 5200
7. Three D Traffic Works ID No. 520896W

Concrete Barrier Markers and Temporary Railing (Type K) Reflectors

Impactable Type

1. ARTUK, "FB"
2. Filtrona Extrusion, Models PCBM-12 and PCBM-T12

3. Duraflex Corp., "Flexx 2020" and "Electriflexx"
4. Hi-Way Safety, Inc., Model GMKRM100
5. Plastic Safety Systems "BAM" Models OM-BARR and OM-BWAR
6. Three D Traffic Works "Roadguide" Model TD 9300

Non-Impactable Type

1. ARTUK, JD Series
2. Plastic Safety Systems "BAM" Models OM-BITARW and OM-BITARA
3. Vega Molded Products, Models GBM and JD
4. Plastic Vacuum Forming, "Cap-It C400"

Metal Beam Guard Rail Post Markers

(For use to the left of traffic)

1. Filtrona Extrusion, "Mini" (3" x 10")
2. Creative Building Products, "Dura-Bull, Model 11201"
3. Duraflex Corp., "Railrider"
4. Plastic Vacuum Forming, "Cap-It C300"

Concrete Barrier Delineators

16-Inch

(For use to the right of traffic)

1. Filtrona Extrusion, Model PCBM T-16
2. Safe-Hit, Model SH216RBM
3. Three D Traffic Works "Roadguide" Model 9400

Concrete Barrier-Mounted Mini-Drum (10" X 14" X 22")

1. Stinson Equipment Company "SaddleMarker"

Guard Railing Delineator

(Place top of reflective element at 48 inches above plane of roadway)

Wood Post Type, 27-inch

1. Filtrona Extrusion, FG 427 and FG 527
2. Carsonite, Model 427
3. FlexStake, Model 102 GR
4. GreenLine GRD 27
5. Safe-Hit, Model SH227GRD
6. Three D Traffic Works "Guardflex" TD9100
7. New Directions Mfg, NDM27

Steel Post Type

1. Carsonite, Model CFGR-327

Retroreflective Sheeting

Channelizers, Barrier Markers, and Delineators

1. Avery Dennison T-6500 Series (For rigid substrate devices only)
2. Avery Dennison WR-7100 Series
3. Nippon Carbide Industries, Flexible Ultralite Grade (ULG) II
4. Reflexite, PC-1000 Metalized Polycarbonate
5. Reflexite, AC-1000 Acrylic
6. Reflexite, AP-1000 Metalized Polyester
7. Reflexite, Conformalight, AR-1000 Abrasion Resistant Coating
8. 3M, High Intensity

Traffic Cones, 4-inch and 6-inch Sleeves

1. Nippon Carbide Industries, Flexible Ultralite Grade (ULG) II
2. Reflexite, Vinyl, "TR" (Semi-transparent) or "Conformalight"
3. 3M Series 3840
4. Avery Dennison S-9000C

Drums

1. Avery Dennison WR-6100
2. Nippon Carbide Industries, Flexible Ultralite Grade (ULG) II
3. Reflexite, "Conformalight", "Super High Intensity" or "High Impact Drum Sheeting"
4. 3M Series 3810

Barricades: Type I, Medium-Intensity
(Typically Enclosed Lens, Glass-Bead Element)

1. Nippon Carbide Industries, CN8117
2. Avery Dennison, W 1100 series
3. 3M Series CW 44

Barricades: Type II, Medium-High-Intensity
(Typically Enclosed Lens, Glass-Bead Element)

1. Avery Dennison, W-2100 Series

Vertical Clearance Signs: Structure Mounted

1. 3M Model 4061, Diamond Grade DG3, Fluorescent Yellow

Signs: Type II, Medium-High-Intensity
(Typically Enclosed Lens, Glass-Bead Element)

1. Avery Dennison, T-2500 Series
2. Nippon Carbide Industries, Nikkalite 18000

Signs: Type III, High-Intensity

(Typically Encapsulated Glass-Bead Element)

1. Avery Dennison, T-5500A and T-6500 Series
2. Nippon Carbide Industries, Nikkalite Brand Ultralite Grade II
3. 3M 3870 and 3930 Series

Signs: Type IV, High-Intensity

(Typically Unmetallized Microprismatic Element)

1. Avery Dennison, T-6500 Series
2. Nippon Carbide Industries, Crystal Grade, 94000 Series
3. Nippon Carbide Industries, Model No. 94847 Fluorescent Orange
4. 3M Series 3930 and Series 3924S

Signs: Type VI, Elastomeric (Roll-Up) High-Intensity, without Adhesive

1. Avery Dennison, WU-6014
2. Novabrite LLC, "Econobrite"
3. Reflexite "Vinyl"
4. Reflexite "SuperBright"
5. Reflexite "Marathon"
6. 3M Series RS20

Signs: Type VII, Super-High-Intensity

(Typically Unmetallized Microprismatic Element)

1. 3M Series 3924S, Fluorescent Orange
2. 3M LDP Series 3970

Signs: Type VIII, Super-High-Intensity

(Typically Unmetallized Microprismatic Element)

1. Avery Dennison, T-7500 Series
2. Avery Dennison, T-7511 Fluorescent Yellow
3. Avery Dennison, T-7513 Fluorescent Yellow Green
4. Avery Dennison, W-7514 Fluorescent Orange
5. Nippon Carbide Industries, Nikkalite Crystal Grade Series 92800
6. Nippon Carbide Industries, Nikkalite Crystal Grade Model 92847 Fluorescent Orange

Signs: Type IX, Very-High-Intensity

(Typically Unmetallized Microprismatic Element)

1. 3M VIP Series 3981 Diamond Grade Fluorescent Yellow
2. 3M VIP Series 3983 Diamond Grade Fluorescent Yellow/Green
3. 3M VIP Series 3990 Diamond Grade
4. Avery Dennison T-9500 Series
5. Avery Dennison, T9513, Fluorescent Yellow Green
6. Avery Dennison, W9514, Fluorescent Orange
7. Avery Dennison, T-9511 Fluorescent Yellow

Specialty Signs

1. Reflexite "Endurance" Work Zone Sign (with Semi-Rigid Plastic Substrate)

Alternative Sign Substrates

Fiberglass Reinforced Plastic (FRP) and Expanded Foam PVC

1. Fiber-Brite (FRP)
2. Sequentia, "Polyplate" (FRP)
3. Inteplast Group "InteCel" (0.5 inch for Post-Mounted CZ Signs, 48-inch or less)(PVC)

Aluminum Composite, Temporary Construction Signs and Permanent Signs up to 4 foot, 7 Inches

1. Alcan Composites "Dibond Material, 80 mils"
2. Mitsubishi Chemical America, Alpolic 350
3. Bone Safety Signs, Bone Light ACM

8-2 Concrete

8-2.1 Portland Cement Concrete

Portland cement concrete shall conform to the provisions in Section 90, "Portland Cement Concrete," of the Standard Specifications and these Special Provisions.
The Department maintains a list of sources of fine and coarse aggregate that have been approved for use with a reduced amount of supplementary cementitious material in the total amount of cementitious material to be used. A source of aggregate will be considered for addition to the approved list if the producer of the aggregate submits to the Transportation Laboratory certified test results from a qualified testing laboratory that verify the aggregate complies with the requirements. Before the testing starts, the aggregate test shall be registered with the Department. A registration number can be obtained by calling (916) 227-7228. The registration number shall be used as the identification for the aggregate sample in correspondence with the Department. Upon request, a split of the tested sample shall be provided to the Department. Approval of aggregate will depend upon compliance with the specifications, based on the certified test results submitted, together with any replicate testing the Department may elect to perform. Approval will expire 3 years from the date the most recent registered and evaluated sample was collected from the aggregate source.

Qualified testing laboratories shall conform to the following requirements:

1. Laboratories performing ASTM Designation: C 1293 shall participate in the Cement and Concrete Reference Laboratory (CCRL) Concrete Proficiency Sample Program and shall have received a score of 3 or better on each test of the previous 2 sets of concrete samples.
2. Laboratories performing ASTM Designation: C 1260 shall participate in the Cement and Concrete Reference Laboratory (CCRL) Pozzolan Proficiency Sample Program and shall have received a score of 3 or better on the shrinkage and soundness tests of the previous 2 sets of pozzolan samples.

Aggregates on the list shall conform to one of the following requirements:

1. When the aggregate is tested in conformance with the requirements in California Test 554 and ASTM Designation: C 1293, the average expansion at one year shall be less than or equal to 0.040 percent; or
2. When the aggregate is tested in conformance with the requirements in California Test 554 and ASTM Designation: C 1260, the average of the expansion at 16 days shall be less than or equal to 0.15 percent.

If the aggregates used in the concrete are on the Department's list, the minimum amount of supplementary cementitious material shall conform to the following:

1. If fly ash or natural pozzolan conforming to the provisions in Section 90-2.01C, "Required Use of Supplementary Cementitious Materials," of the Standard Specifications is used, the minimum amount of supplementary cementitious material shall be 15 percent by weight of the total cementitious material; or
2. If silica fume conforming to the provisions in Section 90-2.01C, "Required Use of Supplementary Cementitious Materials," of the Standard Specifications is used, the minimum amount of supplementary cementitious material shall be 7 percent by weight of the total cementitious material.

The limitation on tricalcium silicate (C_3S) content in Type II cement specified in Section 90-2.01A, "Cement," of the Standard Specifications shall not apply.

8-2.2 Corrosion Control For Portland Cement Concrete

Portland cement concrete at all Bridge Toll Plazas is considered to be in a corrosive environment and shall conform to the provisions in Section 90, "Portland Cement Concrete," of the Standard Specifications and these Special Provisions.

Cementitious material to be used in portland cement concrete shall conform to the provisions in Section 90-2, "Materials," of the Standard Specifications, and shall be a combination of either Type II or Type V portland cement and supplementary cementitious material.

Cementitious material to be used in portland cement concrete shall conform to the provisions in Section 90-2, "Materials," of the Standard Specifications, and shall be a combination of Type II portland cement and supplementary cementitious material.

Concrete in a corrosive environment shall contain not less than 675 pounds of cementitious material per cubic yard.

Reduction in the cementitious material content specified or ordered, in conformance with the provisions in Section 90-4.05, "Optional Use of Chemical Admixtures," of the Standard Specifications, is not permitted for concrete in a corrosive environment.

Unless otherwise specified, for concrete in a corrosive environment, the amount of portland cement shall be 75 percent by weight, and the amount of supplementary cementitious

material shall be 25 percent by weight, of the total amount of cementitious material to be used in the concrete mix.

For concrete at all Bridge Toll Plazas, the cementitious material shall be comprised of either:

1. 20 percent by weight of either flyash or natural pozzolan, 5 percent by weight of silica fume, and 75 percent by weight of portland cement.
2. 10 percent by weight of silica fume and 90 percent by weight of portland cement.
3. 50 percent by weight of ground granulated blast furnace slag, and 50 percent by weight of portland cement.
4. 10 percent by weight of metakaolin conforming to AASHTO Designation: M 295 Class N and 90 percent by weight of portland cement. Metakaolin shall also conform to the following chemical and physical requirements:

Chemical Requirements	Percent
Silicon Dioxide (SiO_2) + Aluminum Oxide (Al_2O_3)	92.0 min.
Calcium Oxide (CaO)	1.0 max
Sulfur Trioxide (SO_3)	1.0 max.
Loss on ignition	1.2 max.
Available Alkalies (as Na_2O) equivalent	1.0 max.

Physical Requirements	Percent
Retained No. 325sieve	2.0 max
Strength Activity Index with portland cement 7 days 28 days	 100 (minimum % of control) 100 (minimum % of control)

The amount of free water used in concrete in a corrosive environment shall not exceed 305 pounds per cubic yard plus 45 pounds for each 100 pounds of cementitious material in excess of 675 pounds per cubic yard.

Full compensation for conforming to the above requirements shall be considered as included in the contract prices paid for the various contract items of work, and no additional compensation will be allowed therefore.

8-2.3 Welding

General

Flux cored welding electrodes conforming to the requirements of AWS A5.20 E6XT-4 or E7XT-4 shall not be used to perform welding for this project.

Wherever reference is made to the following AWS welding codes in the Standard Specifications, on the plans, or in these Special Provisions, the year of adoption for these codes shall be as listed:

AWS Code	Year of Adoption
D1.1	2006
D1.3	2008
D1.4	2005
D1.5	2002
D1.6	1999
D1.8	2009

Requirements of the AWS welding codes shall apply unless otherwise specified in the Standard Specifications, on the plans, or in these Special Provisions. Wherever the abbreviation AWS is used, it shall be equivalent to the abbreviations ANSI/AWS or AASHTO/AWS.

Section 6.1.1.1 of AWS D1.5 is replaced with the following:

Quality Control (QC) shall be the responsibility of the Contractor. As a minimum, the Contractor shall perform inspection and testing of each weld joint prior to welding, during welding, and after welding as specified in this section and as necessary to ensure that materials and workmanship conform to the requirements of the contract documents.

Unless otherwise specified, Sections 6.1.3 through 6.1.4.3 of AWS D1.1, Section 7.1.2 of AWS D1.4, and Sections 6.1.1.2 through 6.1.3.3 of AWS D1.5 are replaced with the following:

The QC Inspector shall be the duly designated person who acts for and on behalf of the Contractor for inspection, testing, and quality related matters for all welding.
Quality Assurance (QA) is the prerogative of the Engineer. The QA Inspector is the duly designated person who acts for and on behalf of the Engineer.
The QC Inspector shall be responsible for quality control acceptance or rejection of materials and workmanship, and shall be currently certified as an AWS Certified Welding Inspector (CWI) in conformance with the requirements in AWS QC1, "Standard for AWS Certification of Welding Inspectors."

The QC Inspector may be assisted by an Assistant QC Inspector provided that this individual is currently certified as an AWS Certified Associate Welding Inspector (CAWI) in conformance with the requirements in AWS QC1, "Standard for AWS Certification of Welding Inspectors." The Assistant QC Inspector may perform inspection under the direct supervision of the QC Inspector provided the assistant is always within visible and audible range of the QC Inspector. The QC Inspector shall be responsible for signing all reports and for determining if welded materials conform to workmanship and acceptance criteria. The ratio of QC Assistants to QC Inspectors shall not exceed 5 to 1.
When the term "Inspector" is used without further qualification, it shall refer to the QC Inspector.

When any work is welded in conformance with the provisions in Section 75, "Miscellaneous Metal," of the Standard Specifications, not including Section 75-1.035, "Bridge Joint Restrainer Units," of the Standard Specifications, Section 6.1.4 of AWS D1.1 is replaced with the following:

The QC Inspector shall be responsible for quality control acceptance or rejection of materials and workmanship and shall be currently certified as an AWS CWI in conformance with

the requirements in AWS QC1, "Standard for AWS Certification of Welding Inspectors," or as a Welding Inspector Specialist (WIS) in conformance with the requirements in AWS B5.2, "Specification for the Qualification of Welding Inspector Specialists and Welding Inspector Assistants."

Section 6.14.6, "Personnel Qualification," of AWS D1.1, Section 7.8, "Personnel Qualification," of AWS D1.4, and Section 6.1.3.4, "Personnel Qualification," of AWS D1.5 are replaced with the following:

Personnel performing nondestructive testing (NDT) shall be qualified and certified in conformance with the requirements of the American Society for Nondestructive Testing (ASNT) Recommended Practice No. SNT-TC-1A and the Written Practice of the NDT firm. The Written Practice of the NDT firm shall meet or exceed the guidelines of the ASNT Recommended Practice No. SNT-TC-1A. Individuals who perform NDT, review the results, and prepare the written reports shall be either:

1. Certified NDT Level II technicians, or;
2. Level III technicians who hold a current ASNT Level III certificate in that discipline and are authorized and certified to perform the work of Level II technicians.

Section 6.5.4 of AWS D1.5 is replaced with the following:

The QC Inspector shall inspect and approve each joint preparation, assembly practice, welding technique, joint fit-up, and the performance of each welder, welding operator, and tack welder to make certain that the applicable requirements of this code and the approved Welding Procedure Specification (WPS) are met. The QC Inspector shall examine the work to make certain that it meets the requirements of Sections 3 and 6.26. The size and contour of all welds shall be measured using suitable gages. Visual inspection for cracks in welds and base metal, and for other discontinuities shall be aided by strong light, magnifiers, or such other devices as may be helpful. Acceptance criteria different from those specified in this code may be used when approved by the Engineer.

Section 6.6.5, "Nonspecified NDT Other than Visual," of AWS D1.1, Section 7.6.5 of AWS D1.4 and Section 6.6.5 of AWS D1.5 shall not apply.

For any welding, the Engineer may direct the Contractor to perform NDT that is in addition to the visual inspection or NDT specified in the AWS or other specified welding codes, in the Standard Specifications, or in these Special Provisions. Except as provided for in these Special Provisions, additional NDT required by the Engineer, and associated repair work, will be paid for as extra work as provided in Section 4-1.03D, "Extra Work," of the Standard Specifications. Prior to release of welded material by the Engineer, if testing by NDT methods other than those originally specified discloses an attempt to defraud or reveals a gross nonconformance, all costs associated with the repair of the deficient area, including NDT of the weld and of the repair, and any delays caused by the repair, shall be at the Contractor's expense. A gross nonconformance is defined as the sum of planar type rejectable indications in more than 20 percent of the tested length.

When less than 100 percent of NDT is specified for any weld, it is expected that the entire length of weld meet the specified acceptance-rejection criteria. Should any welding deficiencies be discovered by additional NDT directed or performed by the Engineer that utilizes the same NDT method as that originally specified, all costs associated with the repair of the deficient area, including NDT of the weld and of the weld repair, and any delays caused by the repair, shall be at the Contractor's expense.

Repair work to correct welding deficiencies discovered by visual inspection directed or performed by the Engineer, and any associated delays or expenses caused to the Contractor by performing these repairs, shall be at the Contractor's expense.

The Engineer shall have the authority to verify the qualifications or certifications of any welder, QC Inspector, or NDT personnel to specified levels by retests or other means approved by the Engineer.

Inspection and approval of all joint preparations, assembly practices, joint fit-ups, welding techniques, and the performance of each welder, welding operator, and tack welder shall be documented by the QC Inspector on a daily basis for each day welding is performed. For each inspection, including fit-up, Welding Procedure Specification (WPS) verification, and final weld inspection, the QC Inspector shall confirm and document compliance with the requirements of the AWS or other specified code criteria and the requirements of these Special Provisions on all welded joints before welding, during welding, and after the completion of each weld.

In addition to the requirements specified in the applicable code, the period of effectiveness for a welder's or welding operator's qualification shall be a maximum of 3 years for the same weld process, welding position, and weld type. If welding will be performed without gas shielding, then qualification shall also be without gas shielding. Excluding welding of fracture critical members, a valid qualification at the beginning of work on a contract will be acceptable for the entire period of the contract, as long as the welder's or welding operator's work remains satisfactory.

In addition to the requirements of AWS D1.1, welding procedures qualification for work welded in conformance with that code shall conform to the following:

When a nonstandard weld joint is to be made using a combination of WPSs, a single test may be conducted combining the WPSs to be used in production, provided the essential variables, including weld bead placement, of each process are limited to those established in Table 4.5.

In addition to the requirements of AWS D1.5, Section 5.12 or 5.13, welding procedures qualification for work welded in conformance with that code shall conform to the following requirements:

1. Unless considered prequalified, fillet welds shall be qualified in each position. The fillet weld soundness test shall be conducted using the essential variables of the WPS as established by the Procedure Qualification Record (PQR).
2. For qualification of joints that do not conform to Figures 2.4 and 2.5 of AWS D1.5, a minimum of two WPS qualification tests are required. The tests shall be conducted using

both Figure 5.1 and Figure 5.3. The test conforming to Figure 5.1 shall be conducted in conformance with AWS D1.5, Section 5.12 or 5.13. The test conforming to Figure 5.3 shall be conducted using the welding electrical parameters that were established for the test conducted conforming to Figure 5.1. The ranges of welding electrical parameters established during welding per Figure 5.1 in conformance with AWS D1.5, Section 5.12, shall be further restricted according to the limits in Table 5.3 during welding per Figure 5.3.

3. Multiple zones within a weld joint may be qualified. The travel speed, amperage, and voltage values that are used for tests conducted per AWS D1.5 Section 5.13 shall be consistent for each pass in a weld joint, and shall in no case vary by more than ±10 percent for travel speed, ±10 percent for amperage, and ±7 percent for voltage as measured from a predetermined target value or average within each weld pass or zone. The travel speed shall in no case vary by more than ±15 percent when using submerged arc welding.
4. For a WPS qualified in conformance with AWS D1.5 Section 5.13, the values to be used for calculating ranges for current and voltage shall be based on the average of all weld passes made in the test. Heat input shall be calculated using the average of current and voltage of all weld passes made in the test for a WPS qualified in conformance with Section 5.12 or 5.13.
5. Macroetch tests are required for WPS qualification tests, and acceptance shall be per AWS D1.5 Section 5.19.3.
6. When a nonstandard weld joint is to be made using a combination of WPSs, a test conforming to Figure 5.3 may be conducted combining the WPSs to be used in production, provided the essential variables, including weld bead placement, of each process are limited to those established in Table 5.3.
7. Prior to preparing mechanical test specimens, the PQR welds shall be inspected by visual and radiographic tests. Backing bar shall be 3 inches in width and shall remain in place during NDT testing. Results of the visual and radiographic tests shall comply with AWS D1.5 Section 6.26.2, excluding Section 6.26.2.2. Test plates that do not comply with both tests shall not be used.

Welding Quality Control

Welding quality control shall conform to the requirements in the AWS or other specified welding codes, the Standard Specifications, and these Special Provisions.

Unless otherwise specified, welding quality control shall apply when any work is welded in conformance with the provisions in Section 49, "Piling," Section 52, "Reinforcement," Section 55, "Steel Structures," or Section 75-1.035, "Bridge Joint Restrainer Units," of the Standard Specifications.

All welding will require inspection by the Engineer. The Contractor shall request inspection at least 3 business days prior to the beginning of welding for locations within California and 5 business days for locations outside of California. The Contractor shall request inspection at:

http://www.dot.ca.gov/hq/esc/Translab/OSM/smbforms.htm

Continuous inspection shall be provided when any welding is being performed. Continuous inspection, as a minimum, shall include having a QC Inspector within such close proximity of all welders or welding operators so that inspections by the QC Inspector of each welding operation at each welding location does not lapse for a period exceeding 30 minutes.

When joint weld details that are not prequalified to the details of Section 3 of AWS D1.1 or to the details of Figure 2.4 or 2.5 of AWS D1.5 are proposed for use in the work, the joint details, their intended locations, and the proposed welding parameters and essential variables, shall be approved by the Engineer. The Contractor shall allow the Engineer 15 days to complete the review of the proposed joint detail locations. In the event the Engineer fails to complete the review within the time allowed, and if, in the opinion of the Engineer, completion of the work is delayed or interfered with by reason of the Engineer's delay in completing the review, the Contractor will be compensated for any resulting loss, and an extension of time will be granted, in the same manner as provided for in Section 8-1.09, "Right of Way Delays," of the Standard Specifications. Upon approval of the proposed joint detail locations and qualification of the proposed joint details, welders and welding operators using these details shall perform a qualification test plate using the WPS variables and the joint detail to be used in production. The test plate shall have the maximum thickness to be used in production and a minimum length of 18 inches. The test plate shall be mechanically and radiographically tested. Mechanical and radiographic testing and acceptance criteria shall be as specified in the applicable AWS codes.

The Engineer will witness all qualification tests for WPSs that were not previously approved by the Department. Unless otherwise specified, an approved independent third party will witness the qualification tests for welders or welding operators. The independent third party shall be a current CWI and shall not be an employee of the Contractor performing the welding. The Contractor shall allow the Engineer 15 days to review the qualifications and copy of the current certification of the independent third party. In the event the Engineer fails to complete the review within the time allowed, and if, in the opinion of the Engineer, completion of the work is delayed or interfered with by reason of the Engineer's delay in completing the review, the Contractor will be compensated for any resulting loss, and an extension of time will be granted, in the same manner as provided for in Section 8-1.09, "Right of Way Delays," of the Standard Specifications. The Contractor shall notify the Engineer 7 days prior to performing any qualification tests. Witnessing of qualification tests by the Engineer shall not constitute approval of the intended joint locations, welding parameters, or essential variables.

The Contractor shall designate in writing a welding Quality Control Manager (QCM). The QCM shall be responsible directly to the Contractor for the quality of welding, including materials and workmanship, performed by the Contractor and subcontractors.

The QCM shall be the sole individual responsible to the Contractor for submitting, receiving, reviewing, and approving all correspondence, required submittals, and reports to and from the Engineer. The QCM shall be a registered professional Engineer or shall be currently certified as a CWI.

Unless the QCM is hired by a subcontractor providing only QC services, the QCM shall not be employed or compensated by any subcontractor, or by other persons or entities hired by

subcontractors, who will provide other services or materials for the project. The QCM may be an employee of the Contractor.

Welding inspection personnel or NDT firms to be used in the work shall not be employed or compensated by any subcontractor, or by other persons or entities hired by subcontractors, who will provide other services or materials for the project, except for the following conditions:

1. The work is welded in conformance with AWS D1.5 and is performed at a permanent fabrication or manufacturing facility that is certified under the AISC Quality Certification Program, Category Cbr, Major Steel Bridges and Fracture Critical endorsement F, when applicable.
2. The work is welded in conformance with AWS D1.1 at a permanent pipe manufacturing or fabrication facility that maintains a QC program that is independent from production.

For welding performed at such facilities, the inspection personnel or NDT firms may be employed or compensated by the facility performing the welding provided the facility maintains a QC program that is independent from production.

Prior to submitting the Welding Quality Control Plan (WQCP) required herein, a prewelding meeting between the Engineer, the Contractor's QCM, and a representative from each entity performing welding or inspection for this project, shall be held to discuss the requirements for the WQCP.

The Contractor shall submit to the Engineer, in conformance with the provisions in Section 5-1.02, "Plans and Working Drawings," of the Standard Specifications, 2 copies of a separate WQCP for each subcontractor or supplier for each item of work for which welding is to be performed.

The Contractor shall allow the Engineer 15 days to review the WQCP submittal after a complete plan has been received. No welding shall be performed until the WQCP is approved in writing by the Engineer. In the event the Engineer fails to complete the review within the time allowed, and if, in the opinion of the Engineer, completion of the work is delayed or interfered with by reason of the Engineer's delay in completing the review, the Contractor will be compensated for any resulting loss, and an extension of time will be granted, in the same manner as provided for in Section 8-1.09, "Right of Way Delays," of the Standard Specifications.

An amended WQCP or any addendum to the approved WQCP shall be submitted to, and approved in writing by the Engineer, for proposed revisions to the approved WQCP. An amended WQCP or addendum will be required for revisions to the WQCP, including but not limited to a revised WPS; additional welders; changes in NDT firms, QC, or NDT personnel or procedures; or updated systems for tracking and identifying welds. The Engineer shall have 7 days to complete the review of the amended WQCP or addendum. Work affected by the proposed revisions shall not be performed until the amended WQCP or addendum has been approved. In the event the Engineer fails to complete the review within the time allowed, and if, in the opinion of the Engineer, completion of the work is delayed or interfered with by reason of the Engineer's delay in completing the review, the Contractor will be compensated for any resulting loss, and an extension of time will be granted, in the same manner as provided for in Section 8-1.09, "Right of Way Delays," of the Standard Specifications.

Information regarding the contents, format, and organization of a WQCP, is available at the Transportation Laboratory and at:

http://www.dot.ca.gov/hq/esc/Translab/OSM/smbresources.htm

After final approval of the WQCP, amended WQCP, or addendum, the Contractor shall submit 7 copies to the Engineer of the approved documents. A copy of the Engineer approved document shall be available at each location where welding is to be performed.

A daily production log for welding shall be kept for each day that welding is performed. The log shall clearly indicate the locations of all welding. The log shall include the welders' names, amount of welding performed, any problems or deficiencies discovered, and any testing or repair work performed, at each location. The daily report from each QC Inspector shall also be included in the log.

The following items shall be included in a Welding Report that is to be submitted to the Engineer within 15 days following the performance of any welding:

1. A daily production log.
2. Reports of all visual weld inspections and NDT.
3. Radiographs and radiographic reports, and other required NDT reports.
4. A summary of welding and NDT activities that occurred during the reporting period.
5. Reports of each application of heat straightening.
6. A summarized log listing the rejected lengths of weld by welder, position, process, joint configuration, and piece number.
7. Documentation that the Contractor has evaluated all radiographs and other nondestructive tests and corrected all rejectable deficiencies, and that all repaired welds have been reexamined using the required NDT and found acceptable.

The following information shall be clearly written on the outside of radiographic envelopes: name of the QCM, name of the nondestructive testing firm, name of the radiographer, date, contract number, complete part description, and all included weld numbers, report numbers, and station markers or views, as detailed in the WQCP. In addition, all interleaves shall have clearly written on them the part description and all included weld numbers and station markers or views, as detailed in the WQCP. A maximum of 2 pieces of film shall be used for each interleave.

Reports of all visual inspections and NDT shall be signed by the inspector or technician and submitted daily to the QCM for review and signature prior to submittal to the Engineer. Corresponding names shall be clearly printed or typewritten next to all signatures. Reports of all NDT, whether specified, additional, or informational, performed by the Contractor shall be submitted to the Engineer.

The Engineer will review the Welding Report to determine if the Contractor is in conformance with the WQCP. Except for steel pipe piling, the Engineer shall be allowed 15 days to review the report and respond in writing after the complete Welding Report has been received. Prior to receiving notification from the Engineer of the Contractor's conformance with

the WQCP, the Contractor may encase in concrete or cover welds for which the Welding Report has been submitted. However, should the Contractor elect to encase or cover those welds prior to receiving notification from the Engineer, it is expressly understood that the Contractor shall not be relieved of the responsibility for incorporating material in the work that conforms to the requirements of the plans and specifications. Material not conforming to these requirements will be subject to rejection. Should the Contractor elect to wait to encase or cover welds pending notification by the Engineer, and in the event the Engineer fails to complete the review within the time allowed, and if, in the opinion of the Engineer, completion of the work is delayed or interfered with by reason of the Engineer's delay in completing the review, the Contractor will be compensated for any resulting loss, and an extension of time will be granted, in the same manner as provided for in Section 8-1.09, "Right of Way Delays," of the Standard Specifications.

For steel pipe piling, including bar reinforcement in the piling, the Contractor shall allow the Engineer 2 business days to review the Welding Report and respond in writing after the required items have been received. No field welded steel pipe piling shall be installed, and no reinforcement in the piling shall be encased in concrete until the Engineer has approved the above requirements in writing.

In addition to the requirements in AWS D1.1 and AWS D1.5, second-time excavations of welds or base metal to repair unacceptable discontinuities, regardless of NDT method, and all repairs of cracks require prior approval of the Engineer.

The Engineer shall be notified immediately in writing when welding problems, deficiencies, base metal repairs, or any other type of repairs not submitted in the WQCP are discovered, and also of the proposed repair procedures to correct them. For requests to perform second-time repairs or repairs of cracks, the Contractor shall include an Engineering evaluation of the proposed repair. The Engineering evaluation, at a minimum, shall address the following:

1. What is causing each defect?
2. Why the repair will not degrade the material properties?
3. What steps are being taken to prevent similar defects from happening again?

The Contractor shall allow the Engineer 7 days to review these procedures. No remedial work shall begin until the repair procedures are approved in writing by the Engineer. In the event the Engineer fails to complete the review within the time allowed, and if, in the opinion of the Engineer, completion of the work is delayed or interfered with by reason of the Engineer's delay in completing the review, the Contractor will be compensated for any resulting loss, and an extension of time will be granted, in the same manner as provided for in Section 8-1.09, "Right of Way Delays," of the Standard Specifications.

The QCM shall sign and furnish to the Engineer, a Certificate of Compliance in conformance with the provisions in Section 6-1.07, "Certificates of Compliance," of the Standard Specifications for each item of work for which welding was performed. The certificate shall state that all of the materials and workmanship incorporated in the work, and all required tests and inspections of this work, have been performed in conformance with the details shown on the plans, the Standard Specifications, and these Special Provisions.

Welding For Overhead Sign And Pole Structures

The Contractor shall meet the following requirements for any work welded in conformance with the provisions in Section 56-1, "Overhead Sign Structures," or Section 86-2.04, "Standards, Steel Pedestals and Posts," of the Standard Specifications.

Welding inspection personnel or NDT firms to be used in the work shall not be employed or compensated by any subcontractor, or by other persons or entities hired by subcontractors, who will provide other services or materials for the project, except for when the welding is performed at a permanent fabrication or manufacturing facility which is certified under the AISC Quality Certification Program, Category Sbd, Conventional Steel Building Structures.

Welding Qualification Audit

Contractors or subcontractors performing welding operations for overhead sign and pole structures shall not deliver materials to the project without having successfully completed the Department's "Manufacturing Qualification Audit for Overhead Sign and Pole Structures," hereinafter referred to as the audit, not more than one year prior to the delivery of the materials. The Engineer will perform the audit. Copies of the audit form, and procedures for requesting and completing the audit, are available at the Transportation Laboratory or at:

http://www.dot.ca.gov/hq/esc/Translab/OSM/smbresources.htm

An audit that was approved by the Engineer no more than one year prior to the beginning of work on this contract will be acceptable for the entire period of this contract, provided the Engineer determines the audit was for the same type of work that is to be performed on this contract.

Successful completion of an audit shall not relieve the Contractor of the responsibility for furnishing materials or producing finished work of the quality specified in these Special Provisions and as shown on the plans.

Welding Report

A daily production log for welding shall be kept for each day that welding is performed. The log shall clearly indicate the locations of all welding. The log shall include the welders' names, amount of welding performed, any problems or deficiencies discovered, and any testing or repair work performed, at each location. The daily report from each QC Inspector shall also be included in the log.

A Welding Report shall be submitted to the Engineer 48 hours prior to furnishing a Certificate of Compliance for the material in conformance with the provisions in Section 6-1.07, "Certificates of Compliance," of the Standard Specifications. The Welding Report shall include the following items:

1. A daily production log.
2. Reports of all visual weld inspections and NDT.
3. Radiographs and radiographic reports, and other required NDT reports.
4. summary of welding and NDT activities that occurred during the reporting period.

5. Documentation that the Contractor has evaluated all radiographs and other nondestructive tests and corrected all rejectable deficiencies, and all repaired welds have been reexamined by the required NDT and found acceptable.

Steel Pipe Piling Qualification Audit

The Contractor shall submit documentation that one of the following steel pipe piling qualification audits has been successfully completed before welding operations are performed, other than field welding, for steel pipe piling:

1. "Class R Steel Pipe Piling Qualification Audit"
2. "Class N Steel Pipe Piling Qualification Audit"

An audit shall have been completed for each pipe pile diameter, thickness, grade of steel, and class of piling, to be supplied for this project. The procedures for requesting and completing the audit are available at:

http://www.dot.ca.gov/hq/esc/Translab/OSM/smbresources.htm

An audit that was approved by the Department no more than 3 years before the beginning of work on this contract will be acceptable for the entire period of this contract, provided the Engineer determines the audit was for the same type of work that is to be performed on this contract.

A list of facilities who have successfully completed the audit and are authorized to provide material for this contract is available at:

http://www.dot.ca.gov/hq/esc/Translab/OSM/smdocuments/Internet_auditlisting.pdf

Successful completion of an audit shall not relieve the Contractor of the responsibility for furnishing materials or producing finished work of the quality specified in these Special Provisions and as shown on the plans.

Payment

Full compensation for conforming to the requirements of "Welding" shall be considered as included in the contract prices paid for the various items of work involved and no additional compensation will be allowed therefore.

SECTION 9. (BLANK)
NOT USED

SECTION 10. CONSTRUCTION DETAILS

10-1 Order of Work

The first order of work shall be to place the order for cladding materials and crash cushion after the Contractor has thoroughly investigated the as-built drawings and the existing canopy and roadway conditions. The Engineer shall be furnished a statement from the vendor that the order for the cladding materials and crash cushion has been received and accepted by the vendor. No cladding panels shall be fabricated until the shop drawings are reviewed and approved by the Resident Engineer.

Attention is directed to "Maintaining Traffic" of these Special Provisions and to the stage construction and traffic handling sheets of the plans.

Attention is directed to "Progress Schedule (Critical Path Method)" of these Special Provisions regarding the submittal of a general time-scaled logic diagram within 10 days after approval of the contract. The diagram shall be submitted prior to performing any work that may be affected by any proposed deviations to the construction staging of the project.

The work shall be performed in conformance with the stages of construction shown on the plans. Any deviations from the Stages of the Construction shown on the plans must be approved by the Engineer. The Engineer will have 9 Calendar days to accept or reject the Contractor's proposed stages of work. Work in subsequent stages may not proceed concurrently with work in preceding stages.

At the end of each working day, all waste materials shall be completely removed from the scaffold or falsework area. No permanent materials shall be stored on the scaffolding, on the falsework, on the canopy roof, or in the canopy structure. The waste material may be temporarily stored refuse containers within the Contractor's staging/laydown area.

10-2 Water Pollution Control

General

Summary

This work includes developing and implementing a water pollution control program (WPCP) for projects where soil disturbance from work activities will be one of the following:

1. Less than 1 acre
2. Less than 5 acres if the project has an Environmental Protection Agency Small Construction Project Erosivity Waiver referred to herein as "Erosivity Waiver"

Information on forms, reports, and other documents can be found in the following Department manuals:

1. Field Guide for Construction Site Dewatering
2. Storm Water Pollution Prevention Plan (SWPPP) and Water Pollution Control Program (WPCP) Preparation Manual
3. Construction Site Best Management Practices (BMP) Manual

For the above-referenced manuals, go to the Department's Web site for the Division of Construction, Storm Water and Water Pollution Control Information or the Department's Publication Distribution Unit.

Do not start job site activities until:

1. The WPCP is approved.
2. WPCP review requirements have been fulfilled. If the Regional Water Quality Control Board (RWQCB) requires time for review, allow 30 days for the review. For projects in the Lake Tahoe Hydrologic Unit and the Mammoth Lakes Hydrologic Unit, the Lahontan RWQCB will review the WPCP.

If you operate a Contractor-support facility, protect stormwater systems and receiving waters from the discharge of potential pollutants by using water pollution control practices.

Contractor-support facilities include:

1. Staging areas
2. Storage yards for equipment and materials
3. Mobile operations
4. Batch plants for PCC and HMA
5. Crushing plants for rock and aggregate
6. Other facilities installed for your convenience, such as haul roads

Discharges from manufacturing facilities, such as batch plants and crushing plants, must comply with the general waste discharge requirements for Order No. 97-03-DWQ, NPDES General Permit No. CAS000001, issued by the State Water Resources Control Board (SWRCB) for "Discharge of Storm Water Associated with Industrial Activities Excluding Construction Activities" and referred to herein as "General Industrial Permit." For the General Industrial Permit, go to the Web site for the SWRCB.

If you operate a batch plant to manufacture PCC, HMA, or other material or a crushing plant to produce rock or aggregate, obtain coverage under the General Industrial Permit. You must be covered under the General Industrial Permit for batch plants and crushing plants located:

1. Outside of the job site
2. Within the job site that serve 1 or more contracts

If you obtain or dispose of material at a noncommercially operated borrow or disposal site, prevent water pollution due to erosion at the site during and after completion of your activities. Upon completion of your work, leave the site in a condition such that water will not collect or stand therein.

The Department does not pay for water pollution control practices at Contractor-support facilities and noncommercially operated borrow or disposal sites.

Definitions

Construction Phase: Includes (1) highway construction phase for building roads and structures, (2) plant establishment and maintenance phase for placing vegetation for final stabilization, and (3) suspension phase for suspension of work activities or winter shutdown. The construction phase continues from the start of work activities to contract acceptance.

Inactive Area: Area where soil-disturbing work activities have not occurred within 15 days.

Qualifying Rain Event: Storm that produces at least 0.5 inch of precipitation with a 48-hour or greater period between rain events.

Storm Event: Storm that produces or is forecasted to produce at least 0.10 inch of precipitation within a 24-hour period.

Submittals

General

Within 7 days after contract approval:

1. Submit 2 copies of your WPCP for review. Allow 15 days for the Department's review. The Engineer provides comments and specifies the date when the review stopped if revisions are required.
2. Resubmit a revised WPCP within 7 days of receiving the Engineer's comments. The Department's review resumes when the complete WPCP has been resubmitted.
3. When the Engineer approves the WPCP, submit an electronic copy and 3 printed copies of the approved WPCP.
4. If the RWQCB requires review of the approved WPCP, the Engineer submits the approved WPCP to the RWQCB for its review and comment.
5. If the Engineer orders changes to the WPCP based on the RWQCB's comments, amend the WPCP within 3 business days.

A qualified SWPPP practitioner (QSP) or qualified SWPPP developer (QSD) must prepare the WPCP.

The WPCP must comply with the Department's Storm Water Pollution Prevention Plan (SWPPP) and Water Pollution Control Plan (WPCP) Preparation Manual and must:

1. Show the location of disturbed soil areas, water bodies, and water conveyances
2. Describe the work involved in the installation, maintenance, repair, and removal of temporary water pollution control practices
3. Show the locations and types of water pollution control practices that will be used for:
    a. Stormwater and nonstormwater in areas outside the job site but related to work activities, including:
        i. Staging areas
        ii. Storage yards
        iii. Access roads
    b. Activities or mobile activities related to all NPDES permits
    c. Contractor-support facilities

4. Show the locations and types of temporary water pollution control practices that will be used in the work for each construction phase
5. Show the locations and types of water pollution control practices that will be installed permanently under the contract
6. Include a schedule showing when:
   a. Work activities will be performed that could cause the discharge of pollutants into stormwater
   b. Water pollution control practices associated with each construction phase will be implemented
   c. Soil stabilization and sediment control practices for disturbed soil areas will be implemented
7. Include a copy of permits obtained by the Department, including Fish & Game permits, US Army Corps of Engineers permits, RWQCB 401 certifications, aerially deposited lead variance from the Department of Toxic Substance Control, aerially deposited lead variance notification, and RWQCB waste discharge requirements for aerially deposited lead reuse

Amend the WPCP whenever:

1. Changes in work activities could affect the discharge of pollutants
2. Water pollution control practices are added by Contract Change Order
3. Water pollution control practices are added at your discretion
4. Changes in the quantity of disturbed soil are substantial
5. Objectives for reducing or eliminating pollutants in stormwater discharges have not been achieved
6. Project receives a written notice or order from the RWQCB or any other regulatory agency

Allow the same review time for amendments to the WPCP as for the original WPCP.

Information after Storm Event

Within 48 hours after the conclusion of a storm event resulting in a discharge, after a nonstormwater discharge, or after receiving a written notice or an order from the RWQCB or another regulatory agency, the WPC manager must submit the following information:

1. Date, time, location, and nature of the activity and the cause of the notice or order
2. Type and quantity of discharge
3. Water pollution control practices in use before the discharge or before receiving the notice or order
4. Description of water pollution control practices and corrective actions taken to manage the discharge or cause of the notice

Training Records

Submit water pollution control training records for all employees and subcontractors who will be working at the job site. Include the training subjects, training dates, ongoing training, and tailgate meetings with your submittal. Submit records for:

1. Existing employees within 5 business days of obtaining WPCP approval
2. New employees within 5 business days of receiving the training
3. A subcontractor's employees at least 5 business days before the subcontractor starts work

Contractor-support Facility

At least 5 business days before operating any Contractor-support facility, submit:

1. A plan showing the location and quantity of water pollution control practices associated with the Contractor-support facility
2. A copy of the notice of intent approved by the RWQCB and the WPCP approved by the RWQCB if you will be operating a batch plant or a crushing plant under the General Industrial Permit

Quality Control and Assurance

Training

Employees must receive initial water pollution control training before starting work at the job site.

For your project managers, supervisory personnel, subcontractors, and employees involved in water pollution control work:

1. Provide stormwater training in the following subjects:
   a. Water pollution control rules and regulations
   b. Implementation and maintenance for:
      i. Temporary soil stabilization
      ii. Temporary sediment control
      iii. Tracking control
      iv. Wind erosion control
      v. Material pollution prevention and control
      vi. Waste management
      vii. Nonstormwater management
2. Conduct weekly training meetings covering:
   a. Deficiencies and corrective actions for water pollution control practices
   b. Water pollution control practices required for work activities during the week
   c. Spill prevention and control
   d. Material delivery, storage, usage, and disposal
   e. Waste management
   f. Nonstormwater management procedures

Water Pollution Control Manager

General

The water pollution control (WPC) manager must be a QSP or QSD. Assign 1 WPC manager to implement the WPCP. You may assign a QSP or QSD other than the WPC manager to develop the WPCP.

Qualifications

A QSP must:

1. Have completed stormwater management training described in the Department's Web site for the Division of Construction, Storm Water and Water Pollution Control Information
2. Be certified for at least one of the following:
   a. Certified Erosion, Sediment and Storm Water Inspector (CESSWI)™ registered through Enviro Cert International, Inc.
   b. Certified Inspector of Sediment and Erosion Control (CISEC) registered through CISEC, Inc.
3. Have completed SWRCB approved QSP training and passed the QSP exam

A QSD must:

1. Have completed stormwater management training described in the Department's Web site for the Division of Construction, Storm Water and Water Pollution Control Information
2. Be one or more of the following:
   a. California registered civil Engineer
   b. California registered professional geologist or Engineering geologist
   c. California licensed landscape architect
   d. Professional hydrologist registered through the American Institute of Hydrology
   e. Certified Professional in Erosion and Sediment Control (CPESC)™ registered through Enviro Cert International, Inc.
   f. Certified Professional in Storm Water Quality (CPSWQ)™ registered through Enviro Cert International, Inc.
   g. Professional in erosion and sediment control registered through the National Institute for Certification in Engineering Technologies (NICET)
3. Have completed SWRCB approved QSD training and passed the QSD exam

Responsibilities

The WPC manager must:

1. Be responsible for water pollution control work
2. Be the primary contact for water pollution control work
3. Oversee:
   a. Maintenance of water pollution control practices
   b. Inspections of water pollution control practices identified in the WPCP
   c. Inspections and reports for visual monitoring
   d. BMP status reports
4. Oversee and enforce hazardous waste management practices including spill prevention and control measures
5. Have authority to mobilize crews to make immediate repairs to water pollution control practices
6. Ensure that all employees have current water pollution control training

7. Implement the approved WPCP
8. Amend the WPCP if required
9. Be at the job site within 2 hours of being contacted
10. Have the authority to stop construction activities damaging water pollution control practices or causing water pollution

Materials

Not Used

Construction

General

Manage work activities in a way that reduces the discharge of pollutants to surface waters, groundwater, and separate municipal storm sewer systems.

Continue WPCP implementation during any suspension of work activities.

You are responsible for delays and you must pay all costs associated with submitting a SWPPP due to your actions that result in one of the following:

1. 1 or more acres of soil disturbance on projects without an Erosivity Waiver
2. More than 5 acres of soil disturbance on projects with an Erosivity Waiver
3. Failure to comply with the schedule for soil disturbing activities for projects with an Erosivity Waiver if the delays void the Erosivity Waiver

Install facilities and devices used for water pollution control practices before performing work activities. Install soil stabilization materials for water pollution control practices in all inactive areas or before storm events.

Repair or replace water pollution control practices within 24 hours of discovering any damage, unless a longer period is authorized.

The Department does not pay for the cleanup, repair, removal, disposal, or replacement of water pollution control practices due to improper installation or your negligence.

You may request changes to the water pollution control work or the Engineer may order changes to water pollution control work. Changes may include additional or new water pollution control practices. Additional water pollution control work is paid for as extra work under Section 4-1.03D, "Extra Work," of the Standard Specifications.

Retain a printed copy of the approved WPCP at the job site.

Monitoring

Monitor and inspect water pollution control practices at the job site.

Notify the Engineer within 6 hours whenever any of the following occurs:

1. You identify discharges into receiving waters or drainage systems that are causing or could cause water pollution
2. You receive a written notice or order for the project from the RWQCB or any other regulatory agency

Monitor the National Weather Service's forecast on a daily basis. For the National Weather Service's forecast, go to the Web site for the National Weather Service.

Inspections

Use the Stormwater Site Inspection Report form for documenting site inspections.

The WPC manager must oversee:

1. Inspections of water pollution control practices identified in WPCP:
   a. Before a forecasted storm event
   b. After a qualifying rain event that produces site runoff
   c. At 24-hour intervals during extended storm events
   d. On a predetermined schedule of at least once a week
2. Daily inspections of:
   a. Storage areas for hazardous materials and waste
   b. Hazardous waste disposal and transporting activities
   c. Hazardous material delivery and storage activities
3. Inspections of:
   a. Vehicle and equipment cleaning facilities:
      i. Daily if vehicle and equipment cleaning occurs daily
      ii. Weekly if vehicle and equipment cleaning does not occur daily
   b. Vehicle and equipment maintenance and fueling areas:
      i. Daily if vehicle and equipment maintenance and fueling occurs daily
      ii. Weekly if vehicle and equipment maintenance and fueling does not occur daily
   c. Vehicles and equipment at the job site for leaks and spills on a daily schedule. Verify that operators are inspecting vehicles and equipment each day of use.
   d. Demolition sites within 50 feet of storm drain systems and receiving waters daily.
   e. Pile driving areas for leaks and spills:
      i. Daily if pile driving occurs daily
      ii. Weekly if pile driving does not occur daily
   f. Temporary concrete washouts:
      i. Daily if concrete work occurs daily
      ii. Weekly if concrete work does not occur daily
   g. Paved roads at job site access points for street sweeping:
      i. Daily if earthwork and other sediment or debris-generating activities occur daily
      ii. Weekly if earthwork and other sediment or debris-generating activities do not occur daily
      iii. Within 24 hours of precipitation forecasted by the National Weather Service
   h. Dewatering work:
      i. Daily if dewatering work occurs daily
      ii. Weekly if dewatering work does not occur daily

i. Temporary active treatment system:
   i. Daily if temporary active treatment system activities occur daily
   ii. Weekly if temporary active treatment system activities do not occur daily
j. Work over water:
   i. Daily if work over water occurs daily
   ii. Weekly if work over water does not occur daily

Deficiencies

Whenever you or the Engineer identify a deficiency in the implementation of the approved WPCP, correct the deficiency:

1. Immediately, unless a later date is authorized
2. Before precipitation occurs

The Department may correct the deficiency and deduct the cost of correcting the deficiency from payment if you fail to correct the deficiency by the agreed date or before the onset of precipitation.

Measurement and Payment

Full compensation for furnishing all labor, materials, tools, equipment, and incidentals and for doing all the work involved in developing and implementing a water pollution control program, including providing a WPC manager, conducting water pollution control training, and monitoring, inspecting and correcting water pollution control practices, as shown on the plans, as specified in the Standard Specifications and these Special Provisions, and as directed by the Engineer shall be considered as included in the lump sum price paid for Water Pollution Control and no additional compensation will be allowed therefore.

The Department pays you for prepare water pollution control program as follows:

1. A total of 75 percent of the item total upon approval of the WPCP
2. A total of 100 percent of the item total upon contract acceptance

10-3 Construction Site Management

General

Summary

Implement effective handling, storage, usage, and disposal practices to control material pollution and manage waste and nonstormwater at the job site before they come in contact with storm drain systems and receiving waters.

The following abbreviations are used in this special provision:

DTSC: Department of Toxic Substance Control.
ELAP: Environmental Laboratory Accreditation Program.
WPC: Water Pollution Control.

Construction

Spill Prevention and Control

General

Keep material or waste storage areas clean, well organized, and equipped with enough cleanup supplies for the material being stored.

Implement spill and leak prevention procedures for chemicals and hazardous substances stored on the job site. Whenever you spill or leak chemicals or hazardous substances at the job site, you are responsible for all associated cleanup costs and related liability.

Report minor, semi-significant, and significant or hazardous spills to the WPC manager. The WPC manager must notify the Engineer immediately.

As soon as it is safe, contain and clean up spills of petroleum materials and sanitary and septic waste substances listed under 40 CFR, Parts 110, 117, and 302.

Minor Spills

Minor spills consist of quantities of oil, gasoline, paint, or other materials that are small enough to be controlled by a 1st responder upon discovery of the spill.
Clean up a minor spill using the following procedures:

1. Contain the spread of the spill
2. Recover the spilled material using absorption
3. Clean the contaminated area
4. Dispose of the contaminated material and absorbents promptly and properly under "Waste Management" of these Special Provisions

Semi-Significant Spills

Semi-significant spills consist of spills that can be controlled by a 1st responder with help from other personnel.

Clean up a semi-significant spill immediately using the following procedures:

1. Contain the spread of the spill.
2. On paved or impervious surfaces, encircle and recover the spilled material with absorbent materials. Do not allow the spill to spread widely.
3. If the spill occurs on soil, contain the spill by constructing an earthen dike and dig up the contaminated soil for disposal.
4. If the spill occurs during precipitation, cover the spill with 10-mil plastic sheeting or other material to prevent contamination of runoff.
5. Dispose of the contaminated material promptly and properly under "Waste Management" of these Special Provisions.

Significant or Hazardous Spills

Significant or hazardous spills consist of spills that cannot be controlled by job site personnel.

Immediately notify qualified personnel of a significant or hazardous spill. Take the following steps:

1. Do not attempt to clean up the spill until qualified personnel have arrived
2. Notify the Engineer and follow up with a report
3. Obtain the immediate services of a spill Contractor or hazardous material team
4. Notify local emergency response teams by dialing 911 and county officials by using the emergency phone numbers retained at the job site
5. Notify the California Emergency Management Agency State Warning Center at (916) 845-8911
6. Notify the National Response Center at (800) 424-8802 regarding spills of Federal reportable quantities under 40 CFR 110, 119, and 302

   Notify other agencies as appropriate, including:

   a. Fire Department
   b. Public Works Department
   c. Coast Guard
   d. Highway Patrol
   e. City Police or County Sheriff's Department
   f. Department of Toxic Substances
   g. California Division of Oil and Gas
   h. Cal/OSHA
   i. Regional Water Resources Control Board

Prevent a spill from entering stormwater runoff before and during cleanup activities. Do not bury or wash the spill with water.

Material Management

General

Minimize or eliminate discharge of material into the air, storm drain systems, and receiving waters while taking delivery of, using, or storing the following materials:

1. Hazardous chemicals, including acids, lime, glues, adhesives, paints, solvents, and curing compounds
2. Soil stabilizers and binders
3. Fertilizers
4. Detergents
5. Plaster
6. Petroleum materials, including fuel, oil, and grease
7. Asphalt and concrete components
8. Pesticides and herbicides

Employees trained in emergency spill cleanup procedures must be present during the unloading of hazardous materials or chemicals.

Use less hazardous materials if practicable.

The following activities must be performed at least 100 feet from concentrated flows of stormwater, drainage courses, and inlets if within the floodplain and at least 50 feet if outside the floodplain, unless otherwise approved by the Engineer:

1. Stockpiling materials
2. Storing pile-driving equipment and liquid waste containers
3. Washing vehicles and equipment in outside areas
4. Fueling and maintaining vehicles and equipment

Material Storage

If materials are stored:

1. Store liquids, petroleum materials, and substances listed in 40 CFR 110, 117, and 302 and place them in secondary containment facilities as specified by US DOT for storage of hazardous materials.
2. Secondary containment facilities must be impervious to the materials stored there for a minimum contact time of 72 hours.
3. Cover secondary containment facilities during non-working days and whenever precipitation is forecasted. Secondary containment facilities must be adequately ventilated.
4. Keep secondary containment facilities free of accumulated rainwater or spills. After precipitation, or in the event of spills or leaks, collect accumulated liquid and place it into drums within 24 hours. Handle the liquid as hazardous waste under "Waste Management" of these Special Provisions unless testing confirms that the liquid is nonhazardous.
5. Do not store incompatible materials, such as chlorine and ammonia, in the same secondary containment facility.
6. Store materials in their original containers with the original material labels maintained in legible condition. Immediately replace damaged or illegible labels.
7. Secondary containment facilities must have the capacity to contain precipitation from a 24-hour-long, 25-year storm, plus 10 percent of the aggregate volume of all containers or the entire volume of the largest container within the facility, whichever is greater.
8. Store bagged or boxed material on pallets. Protect bagged or boxed material from wind and rain during non-working days and whenever precipitation is forecasted.
9. Provide sufficient separation between stored containers to allow for spill cleanup or emergency response access. Storage areas must be kept clean, well organized, and equipped with cleanup supplies appropriate for the materials being stored.
10. Repair or replace perimeter controls, containment structures, covers, and liners as necessary. Inspect storage areas before and after precipitation and at least weekly during other times.

Stockpile Management

Minimize stockpiling of materials at the job site.

Implement water pollution control practices within 72 hours of stockpiling material or before a forecasted storm event, whichever occurs first. If stockpiles are being used, do not allow soil, sediment, or other debris to enter storm drains, open drainages, and watercourses.

Active and inactive soil stockpiles must be:

1. Covered with soil stabilization material or a temporary cover
2. Surrounded with a linear sediment barrier

Stockpiles of asphalt concrete and PCC rubble, HMA, aggregate base, or aggregate subbase must be:

1. Covered with a temporary cover
2. Surrounded with a linear sediment barrier

Stockpiles of pressure-treated wood must be:

1. Placed on pallets
2. Covered with impermeable material

Stockpiles of cold mix asphalt concrete must be:

1. Placed on an impervious surface
2. Covered with an impermeable material
3. Protected from stormwater run-on and runoff

Control wind erosion year round under Section 14-9.02, "Dust Control," of the Standard Specifications.

Repair or replace linear sediment barriers and covers as needed to keep them functioning properly. Whenever sediment accumulates to 1/3 of the linear sediment barrier height, remove the accumulated sediment.

Waste Management

Solid Waste

Do not allow litter, trash, or debris to accumulate anywhere on the job site, including storm drain grates, trash racks, and ditch lines. Pick up and remove litter, trash, and debris from the job site at least once a week. The WPC manager must monitor solid waste storage and disposal procedures on the job site.

If practicable, recycle nonhazardous job site waste and excess material. If recycling is not practicable, dispose of it under Section 7-1.13, "Disposal of Materials Outside the Highway Right of Way," of the Standard Specifications.

Furnish enough closed-lid dumpsters of sufficient size to contain the solid waste generated by work activities. When refuse reaches the fill line, empty the dumpsters. Dumpsters

must be watertight. Do not wash out dumpsters at the job site. Furnish additional containers and pick up dumpsters more frequently during the demolition phase of construction.

Solid waste includes:

1. Brick
2. Mortar
3. Timber
4. Metal scraps
5. Sawdust
6. Pipe
7. Electrical cuttings
8. Nonhazardous equipment parts
9. Styrofoam and other packaging materials
10. Vegetative material and plant containers from highway planting
11. Litter and smoking material, including litter generated randomly by the public
12. Other trash and debris

Furnish and use trash receptacles in the job site yard, field trailers, and locations where workers gather for lunch and breaks.

Hazardous Waste and Contamination

If hazardous waste is, or will be, generated on the job site, the WPC manager must be thoroughly familiar with proper hazardous waste handling and emergency procedures under 40 CFR § 262.34(d)(5)(iii) and must have successfully completed training under 22 CA Code of Regs § 66265.16.

The WPC manager must:

1. Oversee and enforce hazardous waste management practices
2. Inspect all hazardous waste storage areas daily, including all temporary containment facilities and satellite collection locations
3. Oversee all hazardous waste transportation activities on the job site

Submit a copy of uniform hazardous waste manifest forms to the Engineer within 24 hours of transporting hazardous waste.

Submit receiving landfill documentation of proper disposal to the Engineer within 5 business days of hazardous waste transport from the project.

Unanticipated Discovery of Asbestos and Hazardous Substances

Upon discovery of asbestos or a hazardous substance, comply with Section 14-11.02 "Asbestos and Hazardous Substances," of the Standard Specifications.

Hazardous Waste Management Practices

Handle, store, and dispose of hazardous waste under 22 CA Code of Regs Div 4.5.

Use the following storage procedures:

1. Store hazardous waste and potentially hazardous waste separately from nonhazardous waste at the job site.
2. For hazardous waste storage, use metal containers approved by the United States Department of Transportation for the transportation and temporary storage of hazardous waste.
3. Store hazardous waste in sealed, covered containers labeled with the contents and accumulation start date under 22 CA Code of Regs, Div 4.5. Labels must comply with the provisions of 22 CA Code of Regs, Div 4.5.§ 66262.31 and § 66262.32. Immediately replace damaged or illegible labels.
4. Handle hazardous waste containers such that no spillage occurs.
5. Store hazardous waste away from storm drains, watercourses, moving vehicles, and equipment.
6. Furnish containers with adequate storage volume at convenient satellite locations for hazardous waste collection. Immediately move these containers to secure temporary containment facilities when no longer needed at the collection location or when full.
7. Store hazardous waste and potentially hazardous waste in secure temporary containment enclosures having secondary containment facilities impervious to the materials stored there for a minimum contact-time of 72 hours. Temporary containment enclosures must be located away from public access. Acceptable secure enclosures include a locked chain link fenced area or a lockable shipping container located within the project limits.
8. Design and construct secondary containment facilities with a capacity to contain precipitation from a 24-hour-long, 25-year storm; and 10 percent of the aggregate volume of all containers, or the entire volume of the largest container within the facility, whichever is greater.
9. Cover secondary containment facilities during non-working days and if a storm event is predicted. Secondary containment facilities must be adequately ventilated.
10. Keep secondary containment facility free of accumulated rainwater or spills. After a storm event, or in the event of spills or leaks, collect accumulated liquid and place into drums within 24 hours. Handle these liquids as hazardous waste unless testing determines them to be nonhazardous.
11. Do not store incompatible wastes, such as chlorine and ammonia, in the same secondary containment facility.
12. Provide sufficient separation between stored containers to allow for spill cleanup or emergency response access. Storage areas must be kept clean, well organized, and equipped with cleanup supplies appropriate for the wastes being stored.
13. Repair or replace perimeter controls, containment structures, covers, and liners as necessary. Inspect storage areas before and after a storm event, and at least weekly during other times.

Do not:

1. Overfill hazardous waste containers
2. Spill hazardous waste or potentially hazardous waste
3. Mix hazardous wastes
4. Allow hazardous waste or potentially hazardous waste to accumulate on the ground

Dispose of hazardous waste within 90 days of the start of generation. Use a hazardous waste manifest and a transporter registered with the DTSC and in compliance with the CA Highway Patrol Biennial Inspection of Terminals Program to transport hazardous waste to an appropriately permitted hazardous waste management facility.

Dust Control for Hazardous Waste or Contamination

Excavation, transportation, and handling of material containing hazardous waste or contamination must result in no visible dust migration. Have a water truck or tank on the job site at all times while clearing and grubbing and performing earthwork operations in work areas containing hazardous waste or contamination.

Stockpiling of Hazardous Waste or Contamination

Do not stockpile material containing hazardous waste or contamination unless ordered. Stockpiles of material containing hazardous waste or contamination must not be placed where affected by surface run-on or run-off. Cover stockpiles with 13 mils minimum thickness of plastic sheeting or 1 foot of nonhazardous material. Do not place stockpiles in environmentally sensitive areas. Stockpiled material must not enter storm drains, inlets, or waters of the State.

Contractor-Generated Hazardous Waste

You are the generator of hazardous waste generated as a result of materials you bring to the job site. Use hazardous waste management practices if you generate waste on the job site from the following substances:

1. Petroleum materials
2. Asphalt materials
3. Concrete curing compound
4. Pesticides
5. Acids
6. Paints
7. Stains
8. Solvents
9. Wood preservatives
10. Roofing tar
11. Road flares
12. Lime
13. Glues and adhesives
14. Materials classified as hazardous waste under 22 CA Code of Regs, Div 4.5

If hazardous waste constituent concentrations are unknown, use a laboratory certified by the ELAP under the California Department of Public Health to analyze a minimum of 4 discrete representative samples of the waste to determine whether it is a hazardous waste and to determine safe and lawful methods for storage and disposal. Perform sampling and analysis in compliance with US EPA Test Methods for Evaluating Solid Waste, Physical/Chemical Methods (SW-846) and under 22 CA Code of Regs, Div 4.5.

Contractor shall use Contractor's US EPA Generator Identification Number and sign hazardous waste manifests for the hazardous waste Contractor generates.

Identify contaminated soil resulting from spills or leaks by noticing discoloration, or differences in soil properties.

Immediately notify the Engineer of spills or leaks. Clean up spills and leaks under the Engineer's direction and to the satisfaction of the Engineer. Soil with evidence of contamination must be sampled and analysis performed by a laboratory certified by ELAP.

If sampling and analysis of contaminated soil demonstrates that it is a hazardous waste, handle and dispose of the soil as hazardous waste. You are the generator of hazardous waste created as the result of spills or leaks for which you are responsible.

Prevent the flow of water, including ground water, from mixing with contaminated soil by using one or a combination of the following measures:

1. Berms
2. Cofferdams
3. Grout curtains
4. Freeze walls
5. Concrete seal course

If water mixes with contaminated soil and becomes contaminated, sample and analyze the water using a laboratory certified by the ELAP. If analysis results demonstrate that the water is a hazardous waste, manage and dispose of the water as hazardous waste.

Department-Generated Hazardous Waste

If the Department is the generator of hazardous waste during the work performed on this project, use hazardous waste management practices.

Labels must comply with the provisions of 22 CA Code of Regs § 66262.31 and § 66262.32. Mark labels with:

1. Date the hazardous waste is generated
2. The words "Hazardous Waste"
3. Composition and physical state of the hazardous waste (for example, asphalt grindings with thermoplastic or paint)
4. The word "Toxic"
5. Name, address, and telephone number of the Engineer
6. Contract number
7. Contractor or subcontractor name

Handle the containers such that no spillage occurs.

Hazardous Waste Transport and Disposal

Dispose of hazardous waste within California at a disposal site operating under a permit issued by the DTSC.

The Engineer will obtain the US EPA Generator Identification Number for hazardous waste disposal.

The Engineer will sign all hazardous waste manifests. Notify the Engineer 5 business days before the manifests are to be signed.

The Department will not consider you a generator of the hazardous waste and you will not be obligated for further cleanup, removal, or remedial action for such material if handled or disposed of under these specifications and the appropriate State and federal laws and regulations and county and municipal ordinances and regulations regarding hazardous waste.

Paint Waste

Clean water-based and oil-based paint from brushes or equipment within a contained area in a way that does not contaminate soil, receiving waters, or storm drain systems. Handle and dispose of the following as hazardous waste: paints, thinners, solvents, residues, and sludges that cannot be recycled or reused. When thoroughly dry, dispose of the following as solid waste: dry latex paint, paint cans, used brushes, rags, absorbent materials, and drop cloths.

Concrete Waste

Use practices to prevent the discharge of asphalt concrete, PCC, and HMA waste into storm drain systems and receiving waters.
Collect and dispose of asphalt concrete, PCC, and HMA waste generated at locations where:

1. Concrete material, including grout, is used
2. Concrete dust and debris result from demolition
3. Sawcutting, coring, grinding, grooving, or hydro-concrete demolition creates a residue or slurry
4. Concrete trucks or other concrete-coated equipment is cleaned at the job site

Sanitary and Septic Waste

Do not bury or discharge wastewater from a sanitary or septic system within the highway. A sanitary facility discharging into a sanitary sewer system must be properly connected and free from leaks. Place a portable sanitary facility at least 50 feet away from storm drains, receiving waters, and flow lines.

Comply with local health agency provisions if using an on-site disposal system.

Liquid Waste

Use practices that will prevent job-site liquid waste from entering storm drain systems and receiving waters. Liquid waste include the following:

1. Drilling slurries or fluids

2. Grease-free and oil-free wastewater and rinse water
3. Dredgings, including liquid waste from cleaning drainage systems
4. Liquid waste running off a surface, including wash or rinse water
5. Other nonstormwater liquids not covered by separate permits

Hold liquid waste in structurally sound, leak-proof containers, such as roll-off bins or portable tanks.

Liquid waste containers must be of sufficient quantity and volume to prevent overflow, spills, and leaks.

Store containers at least 50 feet from moving vehicles and equipment.

Remove and dispose of deposited solids from sediment traps unless the Engineer approves another method.

Liquid waste may require testing to determine hazardous material content before disposal.

Dispose of drilling fluids and residue.

If a location approved by the Engineer is available within the job site, fluids and residue exempt under 23 CA Code of Regs § 2511(g) may be dried by evaporation in a leak-proof container. Dispose of the remaining as solid waste.

Nonstormwater Management

Water Control and Conservation

Manage water used for work activities in a way that will prevent erosion and the discharge of pollutants into storm drain systems and receiving waters. Obtain authorization before washing anything at the job site with water that could discharge into a storm drain system or receiving waters. Report discharges immediately.

Implement water conservation practices if water is used at the job site. Inspect irrigation areas. Adjust watering schedules to prevent erosion, excess watering, or runoff. Shut off the water source to broken lines, sprinklers, or valves and repair breaks within 24 hours. Reuse water from waterline flushing for landscape irrigation if practicable. Sweep and vacuum paved areas. Do not wash paved areas with water.

Direct runoff water, including water from water line repair, from the job site to areas where it can infiltrate into the ground. Do not allow runoff water to enter storm drain systems and receiving waters. Do not allow spilled water to escape filling areas for water trucks. Direct water from off-site sources around the job site if practicable. Minimize the contact of off-site water with job site water.

Illegal Connection and Discharge Detection and Reporting

Before starting work, inspect the job site and the job site's perimeter for evidence of illicit connections, illegal discharges, and dumping. After starting work, inspect the job site and perimeter on a daily schedule for illicit connections and illegal dumping and discharges.

Whenever illegal connections, discharges, or dumping are discovered, notify the Engineer immediately. Do not take further action unless ordered. Assume that unlabeled or unidentifiable material is hazardous.

Look for the following evidence of illicit connections, illegal discharges, and dumping:

1. Debris or trash piles
2. Staining or discoloration on pavement or soils
3. Pungent odors coming from drainage systems
4. Discoloration or oily sheen on water
5. Stains and residue in ditches, channels, or drain boxes
6. Abnormal water flow during dry weather
7. Excessive sediment deposits
8. Nonstandard drainage junction structures
9. Broken concrete or other disturbances at or near junction structures

Vehicle and Equipment Cleaning

Limit vehicle and equipment cleaning or washing at the job site except what is necessary to control vehicle tracking or hazardous waste. Notify the Engineer before cleaning vehicles and equipment at the job site with soap, solvents, or steam. Contain and recycle or dispose of resulting waste under "Waste Management" of these Special Provisions, whichever is applicable. Do not use diesel to clean vehicles or equipment. Minimize the use of solvents.

Clean or wash vehicles and equipment in a structure equipped with disposal facilities. You may wash vehicles in an outside area if the area is:

1. Paved with asphalt concrete, HMA, or PCC
2. Surrounded by a containment berm
3. Equipped with a sump to collect and dispose of wash water

Use as little water as practicable whenever washing vehicles and equipment with water. Hoses must be equipped with a positive shutoff valve.

Discharge liquid from wash racks to a recycling system or to another system approved by the Engineer. Remove liquids and sediment as necessary.

Vehicle and Equipment Fueling and Maintenance

If practicable, perform maintenance on vehicles and equipment off-site.

If fueling or maintenance must be done at the job site, assign a site or sites, and obtain authorization before using them. Minimize mobile fueling and maintenance activities. Fueling and maintenance activities must be performed on level ground in areas protected from stormwater run-on and runoff.

Use containment berms or dikes around fueling and maintenance areas. Keep adequate quantities of absorbent spill-cleanup material and spill kits in the fueling or maintenance area and on fueling trucks. Dispose of spill-cleanup material and kits immediately after use under "Waste Management" of these Special Provisions. Use drip pans or absorbent pads during fueling or maintenance.

Do not leave fueling or maintenance areas unattended during fueling and maintenance activities. Fueling nozzles must be equipped with an automatic shutoff control. Nozzles must be equipped with vapor-recovery fueling nozzles where required by the Air Quality Management District. Secure nozzles in an upright position when not in use. Do not top off fuel tanks.

Recycle or properly dispose of used batteries and tires under "Waste Management" of these Special Provisions.

If leaks cannot be repaired immediately, remove the vehicle or equipment from the job site.

Structure Removal Over or Adjacent to Water

Do not allow demolished material to enter storm drain systems and receiving waters. Use covers and platforms approved by the Engineer to collect debris. Use attachments on equipment to catch debris during small demolition activities. Empty debris-catching devices daily.

Concrete Curing

Do not overspray chemical curing compounds. Minimize the drift by spraying as close to the concrete as practicable. Do not allow runoff of curing compounds. Cover drainage inlets before applying the curing compound.

Minimize the use and discharge of water by using wet blankets or similar methods to maintain moisture when concrete is curing.

Concrete Finishing

Collect and dispose of water and solid waste from high-pressure water blasting under "Waste Management" of these Special Provisions. Collect and dispose of sand and solid waste from sandblasting under "Waste Management" of these Special Provisions. Before sandblasting, cover drainage inlets within 50 feet of sandblasting. Minimize the drift of dust and blast material by keeping the nozzle close to the surface of the concrete. If the character of the blast residue is unknown, test it for hazardous materials and dispose of it properly.

Inspect containment structures for concrete finishing for damage before each day of use and before forecasted precipitation. Remove liquid and solid waste from containment structures after each work shift.

Sweeping

Sweep by hand or mechanical methods, such as vacuuming. Do not use methods that use only mechanical kick brooms.

Sweep paved roads at construction entrance and exit locations and paved areas within the job site:

1. During clearing and grubbing activities
2. During earthwork activities
3. During trenching activities
4. During roadway structural-section activities
5. When vehicles are entering and leaving the job site
6. After soil-disturbing activities
7. After observing off-site tracking of material

Monitor paved areas and roadways within the project. Sweep within:

1. 1 hour whenever sediment or debris is observed during activities that require sweeping
2. 24 hours whenever sediment or debris is observed during activities that do not require sweeping

Remove collected material, including sediment, from paved shoulders, drain inlets, curbs and dikes, and other drainage areas. You may stockpile collected material at the job site under "Material Management" of these Special Provisions. If stockpiled, dispose of collected material at least once per week under "Waste Management" of these Special Provisions.

You may dispose of sediment within the job site collected during sweeping activities. Protect the disposal areas against erosion.

Keep dust to a minimum during street sweeping activities. Use water or a vacuum whenever dust generation is excessive or sediment pickup is ineffective.

Remove and dispose of trash collected during sweeping under "Waste Management" of these Special Provisions.

Measurement and Payment

The contract lump sum price paid for construction site management includes full compensation for furnishing all labor, materials, tools, equipment, and incidentals and for doing all the work involved in spill prevention and control, material management, waste management, and nonstormwater management, including identifying, sampling, testing, handling, and disposing of hazardous waste resulting from your activities, as shown on the plans, as specified in the Standard Specifications and these Special Provisions, and as ordered by the Engineer.

10-4 Project Appearance

The Contractor shall maintain a neat appearance to the work.

In areas visible to the public, the following shall apply:

1. When practicable, debris resulted from construction activities shall be disposed of concurrently with its removal. If stockpiling is necessary, the material shall be removed or disposed of weekly.
2. Trash bins shall be furnished for debris from structure construction. Debris shall be placed in trash bins daily. Forms or falsework that are to be re-used shall be stacked neatly concurrently with their removal. Forms and falsework that are not to be re-used shall be disposed of concurrently with their removal.
3. Store materials in accordance with manufacturer's instructions, with materials stored in neat and

Full compensation for conforming to the provisions in this section, not otherwise provided for, shall be considered as included in prices paid for the various contract items of work involved and no additional compensation will be allowed therefore.

10-5 Temporary Concrete Washout Facility

General

Summary

This work includes removal and disposal of concrete waste by furnishing, maintaining, and removing temporary concrete washout facilities.

WPCP must describe and include the use of temporary concrete washout facilities as a water pollution control practice for waste management and materials pollution control.

Submittals

At least 5 business days before concrete activities start, submit:

1. Location of washout facilities
2. Name and location of off-site concrete waste disposal facility to receive concrete waste
3. Copy of permit issued by RWQCB for off-site commercial disposal facility
4. Copy of license for off-site commercial disposal facility
5. Copy of permit issued by state or local agency having jurisdiction over disposal facility if disposal site is located outside of the State of California
6. Gravel-filled bag fabric
7. Plastic liner
8. Alternate attachment device for staples, if used

Quality Control and Assurance

Retain and submit records of disposed concrete waste.

Materials

Straw Bales

Straw bales must comply with Section 20-2.06, "Straw," of the Standard Specifications and be:

1. At least 14 inches wide, 18 inches high, 36 inches long, and weigh at least 50 pounds.
2. Composed entirely of vegetative matter, except for binding material.
3. Bound by wire, nylon, or polypropylene string. Do not use jute or cotton binding. Baling wire must be minimum 16 gauge. Nylon or polypropylene string must be approximately 0.08-inch in diameter with 80 pounds of breaking strength.

Stakes

Stakes may be either wood or metal and must comply with the following:

1. Wood stakes must be:
   a. Untreated fir, redwood, cedar, or pine and cut from sound timber
   b. Straight and free of loose or unsound knots and other defects which would render stakes unfit for use
   c. Pointed on the end to be driven into the ground
   d. At least 2" x 2" x 48" in size
2. Metal stakes must be at least 0.5-inch diameter and 48 inches long. Tops of metal stakes must be bent at a 90-degree angle or capped with an orange or red plastic safety cap that fits snugly to the metal stake.

Concrete Washout Sign

Concrete washout sign must comply with Section 12-3.06B, "Portable Signs" of the Standard Specifications and:

1. Be approved by the Engineer
2. Consist of base, framework, and sign panel
3. Be made of plywood
4. Be minimum 2' x 4' in size
5. Read "Concrete Washout" with 3 inches high black letters on white background

Gravel-filled Bag Fabric

Geosynthetic fabric for temporary gravel bag berm must consist of one of these:

1. Polyester
2. Polypropylene
3. Combined polyester and polypropylene

Sample under ASTM D 4354, Procedure C.

Test under ASTM D 4759. All properties must be based on Minimum Average Roll Value (MARV).

Identify, store, and handle under ASTM D 4873.

Protect geosynthetics from moisture, sunlight, and damage during shipping and storage. Label each unit with manufacturer's name, identifying information, and product identification.

Gravel-filled bag fabric must comply with requirements in this table:

Specification	Requirements
Grab breaking load 1-inch grip, lb, min. in each direction	205
Apparent elongation percent, min., in each direction	50
Water Flow Rate max. average roll value, gallons per minute/square foot	80-150
Permittivity 1/sec., min	1.2
Apparent opening size max. average roll value, U.S. Standard sieve size	40-80
Ultraviolet Degradation percent of original unexposed grab breaking load 500 hour, minimum	70

Gravel

Gravel for gravel-filled bags must be:

1. From 3/8 to 3/4 inch in diameter
2. Clean and free of clay balls, organic matter, and other deleterious materials

Gravel-filled Bag

Gravel-filled bag must:

1. Be made of gravel-filled bag fabric.
2. Have inside dimensions from 24 to 32 inches long, and from 16 to 20 inches wide.
3. Have bound opening to retain gravel. Opening must be sewn with yarn, bound with wire, or secured with a closure device.
4. Weigh from 30 to 50 pounds when filled with gravel.

Plastic Liner

Plastic liner must be:

1. Single ply, new polyethylene sheeting
2. At least 10 mils thick
3. Free of holes, punctures, tears or other defects
4. Without seams or overlapping joints

Construction

Placement

Place concrete washout facilities at job site:

1. Before concrete placement activities start
2. In the immediate area of concrete work as approved by the Engineer

3. No closer than 50 feet from storm drain inlets, open drainage facilities, ESAs, or watercourses
4. Away from construction traffic or public access areas

Install a concrete washout sign adjacent to each temporary concrete washout facility location.

For at grade and below grade concrete washout facilities:
1. Build to contain liquid and concrete waste without seepage, spills, or overflow
2. Build in sufficient quantity and size to contain liquid and concrete waste generated by washout activities for concrete wastes
3. Install with plastic liner

If approved, the length and width of temporary concrete washout facility may be increased from minimum dimensions shown on the plans.

If below grade concrete washout facilities are used, construct berms from compacted native material. Gravel may be used in conjunction with compacted native material.

Operation

Use concrete washout facilities for:
1. Washout from concrete delivery trucks
2. Slurries containing portland cement concrete or hot mix asphalt from sawcutting, coring, grinding, grooving, and hydro-concrete demolition
3. Concrete waste from mortar mixing stations

Relocate concrete washout facilities as needed for concrete construction work.

Do not fill higher than 6 inches below rim.

Contractor's WPC manager must inspect concrete washout facilities:
1. Daily if concrete work occurs daily
2. Weekly if concrete work does not occur daily

Maintenance

Maintain temporary concrete washout facility by:
1. Providing adequate holding capacity with 12-inch minimum freeboard
2. Removing and disposing of hardened concrete under Section 15-3.02, "Removal Methods"
3. Patching holes, rips, and voids in plastic liner with tape
4. If plastic liner leaks after patching, replace plastic liner
5. Repairing or replacing gravel-filled bags when they become split, torn, unraveled, or gravel spills out

Repair temporary concrete washout facility within 24 hours of discovering damage unless the Engineer approves a longer period.

If Contractor's vehicles, equipment, or activities disturb or displace temporary concrete washout facility, Contractor shall repair temporary concrete washout facility at Contractor's expense.

Removal

Dispose of concrete waste material at a facility specifically licensed to receive solid concrete waste, liquid concrete waste, or both. When concrete washout facility is full, remove and dispose of concrete waste within 2 days.

When the Engineer determines that temporary concrete washout facility is not needed, remove and dispose of it under Section 7-1.13, "Disposal of Material Outside the Highway Right of Way," of the Standard Specifications.

Backfill and repair ground disturbance, including holes and depressions, caused by the installation and removal of temporary concrete washout facility, under Section 15-1.02, "Preservation of Property," of the Standard Specifications.

Payment

Full compensation for furnishing all labor, materials, tools, equipment, and incidentals, and for doing all the work involved in constructing, maintaining, and removing the concrete washout facility, including removal and disposal of concrete waste, as specified in the Standard Specifications and these Special Provisions, and as directed by the Engineer shall be considered as included in the contract prices paid for items of work requiring concrete and no additional compensation will be allowed therefore .

10-6 Temporary Fence

Temporary fence shall be furnished, constructed, maintained, and later removed as shown on the plans, as specified in these Special Provisions and as directed by the Engineer.

Except as otherwise specified in this section, temporary fence shall conform to the plan details and the specifications for permanent fence of similar character as provided in Section 80, "Fences," of the Standard Specifications.

Used materials may be installed provided the used materials are good, sound and are suitable for the purpose intended, as determined by the Engineer.

Materials may be commercial quality provided the dimensions and sizes of the materials are equal to, or greater than, the dimensions and sizes shown on the plans or specified herein.

Posts shall be either metal or wood at the Contractor's option.

Galvanizing and painting of steel items will not be required.

Treating wood with a wood preservative will not be required.

Concrete footings for metal posts will not be required.

Temporary fence that is damaged during the progress of the work shall be repaired or replaced by the Contractor at the Contractor's expense.

When no longer required for the work, as determined by the Engineer, temporary fence shall be removed. Removed facilities shall become the property of the Contractor and shall be removed from the site of the work, except as otherwise provided in this section.

Removed temporary fence materials that are not damaged may be constructed in the permanent work provided the materials conform to the requirements specified for the permanent work and such materials are new when used for the temporary fence.

Holes caused by the removal of temporary fence shall be backfilled in conformance with the provisions in the second paragraph of Section 15-1.02, "Preservation of Property," of the Standard Specifications.

The various types and kinds of temporary fence will be measured and paid for in the same manner specified for permanent fence of similar character as provided in Section 80, "Fences," of the Standard Specifications.

Full compensation for installing, maintaining, relocating, removing, and disposing of temporary fence shall be considered as included in the contract price paid per linear foot of temporary fence and no additional compensation will be allowed therefore.

10-7 Scaffolding

This is the performance Specifications for Recladding operation of the Canopy Toll Plaza and as follows.

Attention is directed to the minimum vertical clearance requirements shown in the plans.

Scaffolding shall be defined in accordance with and shall conform to the Construction Safety Orders of the Division of Occupational Safety and Health and these Special Provisions.

If scaffolding is constructed for this project over or adjacent to traffic, or suspended from the traveled way, the Contractor shall submit to the Engineer working drawings for scaffolding systems in conformance with Section 5-1.02, "Plans and Working Drawings," of the Standard Specifications, and these Special Provisions.

Scaffolding working drawings shall include the following:

1. Descriptions, calculations, and values for all loads anticipated during the erection, use, and removal of scaffolding.
2. Methods and equipment for erecting, moving, and removing scaffolding.
3. Design details including bolt layouts, welding details, and any connections to existing structures.
4. Stress sheets including a summary of computed stresses in the (1) scaffolding, (2) connections between scaffolding and any existing structures, and (3) existing load supporting members. The computed stresses shall include the effects of erection, movement, and removal of the scaffolding.
5. The scaffold systems shall include screening that will not allow the visibility of workers from a minimum of 0 feet to a maximum of 2,000 ft easterly onto I-80 of the west bound traffic direction.
6. The Contractor shall provide details and provisions for a scaffold system that prevents objects from falling out of the scaffold work area, this shall include sparks created from cutting metals. It is required that hand tools used in the scaffold work area shall be securely tethered to the scaffold to prevent accidental ejection from the scaffold work area.
7. The Contractor shall demonstrate the scaffold in stage 1 of the construction sequencing.

If manufactured scaffolding is used, the manufacturer's name, address, and phone number shall be shown on the working drawings.

The working drawings shall be stamped and signed by an Engineer who is registered as a Civil Engineer. In addition, prior to submitting the working drawings to the Engineer, the working drawings shall be stamped and signed by an independent reviewer who is registered as a Civil Engineer in the State of California. The independent reviewer shall not be employed by the same entity preparing the working drawings.

The Contractor shall allow 10 calendar days for the review of a complete submittal for scaffolding working drawings. Incomplete submittals shall be rejected. In the event the Engineer fails to complete the review within the time allowed, and if, in the opinion of the Engineer, completion of the work is delayed or interfered with by reason of the Engineer's delay in completing the review, the Contractor will be compensated for any resulting loss, and an extension of time will be granted, in the same manner as provided for in Section 8-1.09, "Right of Way Delays," of the Standard Specifications.

Welding for the manufacturing and erection of scaffolding shall conform to the requirements in AWS D1.1 or AWS D1.2 for steel or aluminum construction respectively.

Full compensation for conforming to the above requirements shall be considered as included in the contract prices paid for the various contract items of work, and no additional compensation will be allowed therefore.

Full compensation for furnishing all labor, materials, tooks equipment, and incidentals, and for doing all the work involved in furnishing and installing complete in place, maintaining, relocating, removing, and disposing of the scaffolding, including furnishing connections as shown on the approved shop drawings, as specified in the Standard Specifications and these Special Provisions, and as directed by the Engineer shall be considered as included in the

contract price paid for items of work requiring scaffolding and no additional compensation will be allowed therefore.

10-8 Cooperation

It is anticipated that work by another Contractor may be in progress adjacent to or within the limits of this project during progress of the work on this contract. The following table lists contracts anticipated to be in progress during this contract.

Contract No.	Co-Rte-PM	Location	Type of Work
04-01407	ALA-80-2.0	Median of I-80 at Bay Bridge Toll Plaza	Landscape
04-01404	ALA-80-2.0	Median of I-80 at Bay Bridge Toll Plaza	Demo
04-0120M4	ALA-80-	Bay Bridge	Bridge

Comply with Section 7-1.14, "Cooperation," of the Standard Specifications.

10-9 Progress Schedule (Critical Path Method)

General

Summary

Comply with Section 8-1.04, "Progress Schedule," of the Standard Specifications, except you must:

1. Use a computer software to prepare the schedule
2. Furnish compatible software for the Engineer's exclusive possession and use

You are responsible for assuring that all activity sequences are logical and that each schedule shows a coordinated plan for complete performance of the work.

Definitions

Contract Completion Date: The current extended date for completion of the contract shown on the weekly statement of working days furnished by the Engineer as specified in Section 8-1.06, "Time of Completion," of the Standard Specifications.

Data Date: The day after the date through which a schedule is current. Everything occurring earlier than the data date is "as-built" and everything on or after the data date is "planned."

Float: The difference between the earliest and latest allowable start or finish times for an activity.

Milestone: An event activity that has zero duration and is typically used to represent the beginning or end of a certain stage of the project.

Near Critical Path: A chain of activities with total float exceeding that of the critical path but having no more than 10 working days of total float.

Time-Scaled Network Diagram: A graphic depiction of a CPM schedule comprised of activity bars with relationships for each activity represented by arrows. The tail of each arrow connects to the activity bar for the predecessor and points to the successor.

Total Float: The amount of time that an activity or chain of activities can be delayed before extending the scheduled completion date.

Submittals

General Requirements

Submit to the Engineer baseline, monthly updated, and final updated schedules, each consistent in all respects with the time and order of work requirements of the contract. Perform work in the sequence indicated on the current accepted schedule.

Each schedule must show:

1. Calculations using critical path method to determine controlling activities.
2. Duration activities less than 20 working days.
3. Each required constraint. Constraints other than those required by the Special Provisions may be included only if authorized.

The Engineer's review and acceptance of schedules does not waive any contract requirements and does not relieve you of any obligation or responsibility for submitting complete and accurate information.

Correct rejected schedules and resubmit them within 7 days of notification by the Engineer, at which time a new review period of 7 days will begin.

Errors or omissions on schedules do not relieve you from finishing all work within the time limit specified for completion of the contract. If, after a schedule has been accepted by the Engineer, either you or the Engineer discover that any aspect of the schedule has an error or omission, you must correct it on the next updated schedule.

Computer Software

Submit to the Engineer for review a description of proposed schedule software to be used. After the Engineer accepts the proposed software, furnish schedule software and all original software instruction manuals. All software must be compatible with the current version of the Windows operating system in use by the Engineer. The schedule software must include

the latest version of Oracle Primavera P6 Professional Project Management for Windows, or equivalent.

If a schedule software equivalent to P6 is proposed, it must be capable of:

1. Generating files that can be imported into P6
2. Comparing 2 schedules and providing reports of changes in activity ID, activity description, constraints, calendar assignments, durations, and logic ties

The schedule software and schedule-comparing software will be returned to you before the final estimate. The Department will compensate you as specified in Section 4-1.03, "Extra Work," of the Standard Specifications for replacement of software or manuals damaged, lost, or stolen after delivery to the Engineer.

Instruct the Engineer in the use of the software and provide software support until the contract is accepted. Within 15 days of contract approval, provide a commercial 8-hour training session for 2 Department employees in the use of the software at a location acceptable to the Engineer. It is recommended that you also send at least 2 employees to the same training session to facilitate development of similar knowledge and skills in the use of the software. If schedule software other than P6 is submitted, then the training session must be a total of 16-hours for each Department employee.

Network Diagrams, Reports, and Data

Include the following with each schedule submittal:

1. Two sets of originally plotted, time-scaled network diagrams
2. One read-only compact disk or floppy diskette containing the schedule data

The time-scaled network diagrams must conform to the following:

1. Show a continuous flow of information from left to right
2. Be based on early start and early finish dates of activities
3. Clearly show the critical path using graphical presentation
4. Be prepared on 11" x 17" or larger size
5. Include a title block and a timeline on each page

Baseline Schedule

Submit to the Engineer a baseline schedule within 10 calendar days of Notice of Award. Allow 20 days for the Engineer's review after the baseline schedule and all support data are submitted. Beginning the week the baseline schedule is first submitted, meet with the Engineer weekly to discuss and resolve schedule issues until the baseline schedule is accepted.

The baseline schedule must include the entire scope of work and must show how you plan to complete all work contemplated. Multiple critical paths and near-critical paths must be kept to a minimum. A total of not more than 50 percent of the baseline schedule activities must be critical or near critical, unless otherwise authorized by the Engineer.

The baseline schedule must not extend beyond the number of working days originally provided in these Special Provisions.

Updated Schedule

Submit an updated schedule and meet with the Engineer to review contract progress on or before the 1st day of each month, beginning one month after the baseline schedule is accepted. Allow 15 days for the Engineer's review after the updated schedule and all support data are submitted, except that the review period will not start until any previous month's required schedule is accepted. Updated schedules that are not accepted or rejected within the review period are considered accepted by the Engineer.

The updated schedule must show:

1. Data date of the 21st day of the month or other date established by the Engineer
2. Changes from approved revised schedules

Final Updated Schedule

Submit a final updated schedule with actual start and finish dates for the activities within 30 days after completion of contract work. Provide a written certificate with this submittal signed by Contractor's Project Manager or an officer of the company stating, "To my knowledge and belief, the enclosed final updated schedule reflects the actual start and finish dates of the actual activities for the project contained herein."

An officer of the company may delegate in writing the authority to sign the certificate to a responsible manager.

Payment

Full compensation for furnishing software, instructing and assisting the Engineer in the use of computer software, and preparing, furnishing, and updating schedules is considered as included in the contract prices paid for the various items of work involved and no additional compensation will be allowed.

10-10 Existing Highway Facilities

The work performed in connection with various existing highway facilities shall conform to the provisions in Section 15, "Existing Highway Facilities," of the Standard Specifications and these Special Provisions.

Existing Paint Systems

The existing paint systems on Toll Booths consist of lead, chromium, and zinc. Any work that disturbs the existing paint system will expose workers to health hazards and will (1) produce debris containing heavy metal in amounts that exceed the thresholds established in

Titles 8 and 22 of the California Code of Regulations or (2) produce toxic fumes when heated. All debris produced when the existing paint system is disturbed shall be contained.

Attention is directed to Section 7-1.06, "Safety and Health Provisions," of the Standard Specifications. Work practices and worker health and safety shall conform to the California Division of Occupational Safety and Health Construction Safety Orders Title 8, of the California Code of Regulations including Section 5158, "Other Confined Space Operations."

Attention is directed to "**Material Containing Lead**" of these Special Provisions regarding payment for the Lead Compliance Plan. If it is required by the contract, or if the Contractor's work requires removing of the paint that contains lead, chromium, and zinc, then the Contractor shall be required to prepare one Lead Compliance Plan that addresses exposure to lead from paint and from lead in **building materials**.

10-11 Clearing and Grubbing

Clearing and grubbing shall conform to the provisions in Section 16, "Clearing and Grubbing," of the Standard Specifications and these Special Provisions.

Removal of improvements designated on the plans to be removed, shall be demolished and removed as part of the work included under clearing and grubbing unless stated otherwise elsewhere in these Special Provisions.

The Contractor shall not dispose of the improvements or materials there from by sale, gift or in any manner whatsoever to the general public at the site, provided however, that this provision shall not be construed as limiting or prohibiting the sale or disposal of the improvements or materials at the site to duly licensed Contractors or material vendors, and provided that the materials are removed from the improvement by the State's Contractor.

Full compensation for demolition, removal, and disposal of the facilities specified in these Special Provisions, as shown on the plans and as directed by the Engineer shall be considered as included in the contract prices paid for various items of work and no additional compensation will be allowed therefore.

10-12 Material Containing Lead

Lead Compliance Plan

Prepare and submit a lead compliance plan to prevent or minimize worker exposure to lead while managing and handling traffic stripe residue, and pavement marking residue containing lead. Regulations containing specific Cal/OSHA requirements when working with lead include 8 CA Code of Regs § 1532.1.

The plan must contain the items listed in 8 CA Code of Regs § 1532.1(e)(2)(B). Before submittal, a CIH must sign and seal the plan. Submit the plan at least 7 days before starting any activity that presents the potential for lead exposure. The Engineer notifies you of the acceptability of the plan within 4 business days of receipt.

Before starting any activity that presents the potential for lead exposure to employees who have no prior training, including State employees, provide a safety training program to these employees that complies with 8 CA Code of Regs § 1532.1 and your lead compliance program. Submit copies of air monitoring or job site inspection reports made by or under the direction of the CIH under 8 CA Code of Regs § 1532.1 within 10 days after the date of monitoring or inspection.

Supply personal protective equipment, training, and washing facilities required by your lead compliance plan for ten (10) State employees.

Work Plan

Submit a work plan for the removal, containment, storage, and disposal of yellow thermoplastic and yellow painted traffic stripe and pavement marking for acceptance not less than 15 days prior to the start of the removal operations. The work plan must include:

1. Objective of the operation
2. Removal equipment
3. Type of hazardous waste storage containers
4. Container storage location and how it will be secured
5. Hazardous waste sampling protocol and QA/QC requirements and procedures
6. Qualifications of sampling personnel
7. Analytical lab that will perform the analyses
8. Certification documentation of the hazardous waste hauler that will transport the hazardous waste
9. Disposal site that will accept the hazardous waste residue

The Engineer will review the work plan within 5 business days of receipt.

Do not perform work that generates hazardous waste residue until the work plan has been accepted by the Engineer. The Engineer's review and acceptance does not waive any contract requirements and does not relieve the Contractor from complying with Federal, State, and local laws, regulations, and requirements.

Correct any rejected work plan and resubmit a corrected work plan within 5 business days of notification by the Engineer; at which time a new review period of 5 business days will begin.

Analytical Test Results

Submit analytical test results of the residue from removal of yellow thermoplastic and yellow painted surfaces, including chain of custody documentation, for review and acceptance before:

1. Requesting the Engineer's signature on the waste profile requested by the disposal facility
2. Requesting the Engineer obtain an EPA ID no. for disposal
3. Removing the residue from the site

United States Environmental Protection Agency Identification Number Request

Submit a request for the U.S. EPA ID no. when the Engineer accepts analytical test results documenting that residue from removal of paint is a hazardous waste. If analytical test results demonstrate that the residue is a non–hazardous waste and the Engineer agrees, dispose of the residue at an appropriately permitted Class II or Class III facility under Section 7-1.13, "Disposal of Material Outside the Highway Right of Way," of the Standard Specifications.

Disposal Documentation

Submit receiving landfill documentation of proper disposal within 5 business days of residue transport from the project.

Construction

Where construction activities will produce a hazardous waste residue, the removed residue, including dust, must be contained and collected immediately.

Store hazardous waste residue in labeled and covered containers. Labels must comply with the provisions of 22 CA Code of Regs §§66262.31 and 66262.32. Mark labels with:

1. Date the hazardous waste is generated
2. The words "Hazardous Waste"
3. Composition and physical state of the hazardous waste (for example, asphalt grindings with thermoplastic or paint)
4. The word "Toxic"
5. Name, address, and telephone no. of the Engineer
6. Contract no.
7. Contractor or subcontractor name

Use metal containers approved by the U.S. Department of Transportation for the transportation and temporary storage of the removed residue. Handle the containers such that no spillage occurs. Store containers in a secured enclosure. Acceptable secure enclosures include a locked chain link fenced area or a lockable shipping container located within the project limits until disposal as approved.

Make necessary arrangements to test the removed paint hazardous waste residue as required by the disposal facility and these Special Provisions. Testing must include, at a minimum:

1. Total lead by EPA Method 6010C
2. Total chromium by US EPA Method 7000 series
3. Soluble lead by California Waste Extraction Test
4. Soluble chromium by California Waste Extraction Test
5. Soluble lead by Toxicity Characteristic Leaching Procedure
6. Soluble chromium by Toxicity Characteristic Leaching Procedure

From the 1st 840 L of hazardous waste or portion thereof if less than 840 L of hazardous waste are produced, a minimum of 4 randomly selected samples must be taken and analyzed individually. Samples must not be composited. From each additional 3360 L of hazardous waste or portion thereof if less than 3360 L are produced, a minimum of 1 additional random sample must be taken and analyzed. Use chain of custody procedures consistent with Chapter 9 of U.S. EPA Test Methods for Evaluating Solid Waste, Physical/Chemical Methods (SW-846) while transporting samples from the project to the laboratory. Each sample must be homogenized before analysis by the laboratory performing the analyses. A sample aliquot sufficient to cover the amount necessary for the total and the soluble analyses must then be taken. This aliquot must be homogenized a 2nd time and the total and soluble analyses run on this aliquot. The homogenization process must not include grinding of the samples. Submit the name and location of the disposal facility that will be accepting the hazardous waste and the analytical laboratory along with the testing requirements not less than 5 business days before the start of removal of yellow thermoplastic and yellow painted traffic stripe and pavement marking. The analytical laboratory must be certified by the CA Department of Public Health Environmental Laboratory Accreditation Program for all analyses to be performed.

After the Engineer accepts the analytical test results, dispose of paint hazardous waste residue at a Class 1 disposal facility located in CA under the requirements of the disposal facility operator within 90 days after accumulation.

If analytical test results demonstrate that the residue is a non–hazardous waste and the Engineer agrees, dispose of the residue at an appropriately permitted Class II or Class III facility under Section 7-1.13, "Disposal of Material Outside the Highway Right of Way," of the Standard Specifications.

Measurement and Payment

Full compensation for furnishing all labor, materials, tools, equipment, and incidentals, and for doing all of the work involved in testing paint. removal, containment, storage, and disposal, and implementing the plans, as specified in the Standard Specifications and these Special Provisions, and as directed by the Engineer shall be included in the various items of work and no additional compensation will be allowed therefore.

10-13 Remove Concrete

Concrete, where shown on the plans to be removed, shall be removed.

The pay quantities of concrete to be removed will be measured by the cubic yard, measured before and during removal operations.

Concrete removed shall be disposed of outside the highway right of way in conformance with the provisions in Section 7-1.13, "Disposal of Material Outside the Highway Right of Way," of the Standard Specifications.

Where no joint exists between concrete to be removed and concrete to remain in place, the concrete shall be cut on a neat line to a minimum depth of 0.17-foot with a power driven saw before the concrete is removed.

Where concrete has been removed outside the roadway prism, the backfilled areas shall be graded to drain and blend in with the surrounding terrain.

Concrete to be removed which has portions of the same structure both above and below ground will be considered as concrete above ground for compensation.

Full compensation for furnishing all labor, materials, tools, equipment, and incidentals, and for doing all of the work involved in removing concrete, including the concrete stairs, containment, storage, and disposal outside of State right of way, as shown on the plans, as specified in the Standard Specifications and these Special Provisions, and as directed by the Engineer shall be included in the unit price paid for Remove Concrete and no additional compensation will be allowed therefore.

10-14 Waterproofing

Waterproofing shall conform to the provisions in Section 54, "Waterproofing," of the Standard Specifications and these Special Provisions.

At the option of the Contractor, a preformed membrane waterproofing system may be furnished and applied in lieu of the asphalt membrane waterproofing specified above. Preformed membrane waterproofing shall conform to these Special Provisions.

A Certificate of Compliance conforming to the provisions in Section 6-1.07, "Certificates of Compliance," of the Standard Specifications shall be furnished for the preformed membrane sheet. The Certificate of Compliance shall include the following information: (1) type of preformed membrane sheet, and (2) the conditioner or primer application rates.

The preformed membrane waterproofing system shall consist of an adhesive, conditioner or primer applied to a prepared surface; a preformed membrane sheet of rubberized asphalt or polymer modified bitumen; mastic or tape for sealing the edges of the sheet; and a protective covering over the sheet held by an adhesive.

The preformed membrane sheet shall be either permanently applied to a polyethylene film or reinforced with a polypropylene mesh fabric, polyester/polypropylene fabric or a fiberglass mesh fabric. The membrane sheet shall conform to the following requirements:

Property	Test	Requirement	
		Polyethylene Film	Fabric Reinforced
Tensile Strength (min.)(1)	ASTM D 882 (2)	20 lbs/in (3)	20 lbs/in (3)
Percent Elongation at break (min.) (4)	ASTM D 882 (2)	150 percent (3)	25 percent (3)
Pliability	ASTM D 146 (5)	No cracks	No cracks
Thickness (min.) (6)	------	60 mils	60 mils
Rubberized Asphalt Softening Point (min.)	AASHTO T 53	165° F	165° F
Polymer Modified Bitumen Softening Point (min.)	AASHTO T 53	210° F	210° F

Notes:
(1) Breaking factor in machine direction.
(2) Method A, average 5 samples.
(3) At 73.4° F ±3.6° F
(4) Machine direction.
(5) 180-degree bend over a one-inch mandrel at 10° F
(6) Total thickness of preformed membrane sheet and polyethylene film or fabric reinforcement

Adhesives, conditioners, primers, mastics and sealing tapes shall be manufactured for use with the respective preformed membrane sheet materials and shall be applied according to the manufacturer's recommendations.

The protective covering shall be 1/8 inch minimum thickness hardboard or other material that furnishes equivalent protection. Backfill material and equipment shall not cut, scratch, depress or cause any other damage to the preformed membrane.

Surfaces designated to receive preformed membrane waterproofing shall be thoroughly cleaned of dirt, dust, loose or unsound concrete, and other extraneous material and shall be free from fins, sharp edges, and protrusions that would, in the opinion of the Engineer, puncture or otherwise damage the membrane. Sharp corners to be covered shall be rounded (outside) or chamfered (inside).

Surfaces shall be dry when components of the preformed membrane waterproofing system are applied.

Preformed membrane waterproofing shall not be applied to any surface until the Contractor is prepared to follow its application with the placing of the protective covering and backfill within a sufficiently short time that the membrane will not be damaged by workers or equipment, exposure to weathering, or from any other cause. Damaged membrane or protective covering shall be repaired or replaced by the Contractor at the Contractor's expense.

All projecting pipe, conduits, sleeves or other facilities passing through the preformed membrane waterproofing shall be flashed with prefabricated or field-fabricated boots, fitted coverings or other devices as necessary to provide watertight construction.

All conditioner or primers shall be thoroughly mixed and continuously agitated during application. Conditioner, primers or adhesive shall be allowed to dry to a tack free condition prior to placing membrane sheets.

The surfaces shall be recoated if membrane sheets are not placed over primer, conditioner or adhesive within the time recommended by the manufacturer.

The preformed membrane sheet shall not be applied in wet or foggy weather, nor when the ambient temperature is below 40° F.

Preformed membrane material shall be placed starting at the bottom and lapped by a minimum of 6 inches at splices and at repairs to holes or tears.

Exposed edges of membrane sheets shall have a trowelled bead of manufacturer's recommended mastic or sealing tape applied after the membrane is placed.

The surface of the preformed membrane shall be cleaned free of dirt and other deleterious material before the protective covering is placed.

The protective covering shall be placed on a coating of adhesive of a type recommended by the manufacturer. The adhesive shall be applied at a rate sufficient to hold the protective covering in position until the backfill is placed.

Preformed membrane waterproofing will be measured and paid for by the square foot as asphalt membrane waterproofing.

Dampproofing will be measured and paid for as asphalt membrane waterproofing.

Full compensation for furnishing all labor, materials, tools, equipment, and incidentals, and for doing all of the work involved in Asphalt Membrane Waterproofing, as shown on the plans, as specified in the Standard Specifications and these Special Provisions, and as directed by the Engineer shall be included in the lump sum price paid for Asphalt Membrane Waterproofing and no additional compensation will be allowed therefore.

10-15 Construction Area Traffic Control Devices

In Section 12-1.01 in the 2nd paragraph, replace the 1st sentence with: Attention is directed to Part 6 of the California MUTCD.

12-2.01 FLAGGERS

Flaggers while on duty and assigned to traffic control or to give warning to the public that the highway is under construction and of any dangerous conditions to be encountered as a result thereof, shall perform their duties and shall be provided with the necessary equipment in conformance with Part 6 of the California MUTCD. The equipment shall be furnished and kept clean and in good repair by the Contractor at the Contractor's expense. Flagging, signs, and temporary traffic control devices furnished, installed, maintained, and removed when no longer required shall conform to the provisions in Section 12, "Construction Area Traffic Control Devices," of the Standard Specifications and these Special Provisions.

All flaggers shall wear safety apparel meeting the requirements of ANSI/ISEA 107-2004 for Class 2 or 3 garment and complying with 71 Fed Reg 67792.

In Section 12-3.01 replace the 1st paragraph with: In addition to the requirements in Part 6 of the California MUTCD, all devices used by the Contractor in the performance of the work shall conform to the provisions in this Section 12-3.

In Section 12-3.06 in the 1st paragraph, replace the 2nd sentence with: Construction area signs are shown in or referred to in Part 6 of the California MUTCD.

In Section 12-3.06 in the 4th paragraph, replace the 1st sentence with: All construction area signs shall conform to the dimensions, color and legend requirements of the plans, Part 6 of the California MUTCD and these specifications.

In Section 12-3.06 in the 8th paragraph, replace the 1st sentence with: Used signs with the specified sheeting material will be considered satisfactory if they conform to the requirements for visibility and legibility and the colors conform to the requirements in Part 6 of the California MUTCD.

Category 1 temporary traffic control devices are defined as small and lightweight (less than 100 pounds) devices. These devices shall be certified as crashworthy by crash testing, crash testing of similar devices, or years of demonstrable safe performance. Category 1 temporary traffic control devices include traffic cones, plastic drums, portable delineators, and channelizers.

If requested by the Engineer, the Contractor shall provide written self-certification for crashworthiness of Category 1 temporary traffic control devices at least 5 business days before beginning any work using the devices or within 2 business days after the request if the devices are already in use. Self-certification shall be provided by the manufacturer or Contractor and shall include the following:

1. Date,
2. Federal Aid number (if applicable),
3. Contract number, district, county, route and post mile of project limits,
4. Company name of certifying vendor, street address, city, state and zip code,
5. Printed name, signature and title of certifying person; and
6. Category 1 temporary traffic control devices that will be used on the project.

The Contractor may obtain a standard form for self-certification from the Engineer.

Category 2 temporary traffic control devices are defined as small and lightweight (less than 100 pounds) devices that are not expected to produce significant vehicular velocity change, but may cause potential harm to impacting vehicles. Category 2 temporary traffic control devices include barricades and portable sign supports.

Category 2 temporary traffic control devices shall be on the Federal Highway Administration's (FHWA) list of Acceptable Crashworthy Category 2 Hardware for Work Zones. This list is maintained by FHWA and can be located at:

http://safety.fhwa.dot.gov/roadway_dept/policy_guide/road_hardware/listing.cfm?code=workzone

The Department also maintains this list at:

http://www.dot.ca.gov/hq/traffops/signtech/signdel/pdf/Category2.pdf

Category 2 temporary traffic control devices that have not received FHWA acceptance shall not be used. Category 2 temporary traffic control devices in use that have received FHWA acceptance shall be labeled with the FHWA acceptance letter number and the name of the manufacturer. The label shall be readable and permanently affixed by the manufacturer. Category 2 temporary traffic control devices without a label shall not be used.

If requested by the Engineer, the Contractor shall provide a written list of Category 2 temporary traffic control devices to be used on the project at least 5 business days before beginning any work using the devices or within 2 business days after the request if the devices are already in use.

Category 3 temporary traffic control devices consist of temporary traffic-handling equipment and devices that weigh 100 pounds or more and are expected to produce significant vehicular velocity change to impacting vehicles. Temporary traffic-handling equipment and devices include crash cushions, truck-mounted attenuators, temporary railing, temporary barrier, and end treatments for temporary railing and barrier.

Type III barricades may be used as sign supports if the barricades have been successfully crash tested, meeting the NCHRP Report 350 criteria, as one unit with a construction area sign attached.

Category 3 temporary traffic control devices shall be shown on the plans or on the Department's Highway Safety Features list. This list is maintained by the Division of Engineering Services and can be found at:

http://www.dot.ca.gov/hq/esc/approved_products_list/

Category 3 temporary traffic control devices that are not shown on the plans or not listed on the Department's Highway Safety Features list shall not be used.

Full compensation for providing self certification for crashworthiness of Category 1 temporary traffic control devices and for providing a list of Category 2 temporary traffic control devices used on the project shall be considered as included in the prices paid for the various items of work requiring the use of the Category 1 or Category 2 temporary traffic control devices and no additional compensation will be allowed therefore.

10-16 Construction Area Signs

Construction area signs for temporary traffic control shall be furnished, installed, maintained, and removed when no longer required in conformance with the provisions in Section 12, "Construction Area Traffic Control Devices," of the Standard Specifications and these Special Provisions.

Attention is directed to the provisions in "Prequalified and Tested Signing and Delineation Materials" of these Special Provisions. Type II retroreflective sheeting shall not be used on construction area sign panels. Type III, IV, VIII, or IX retroreflective sheeting shall be used for stationary mounted construction area sign panels.

Unless otherwise shown on the plans or specified in these Special Provisions, the color of construction area warning and guide signs shall have black legend and border on orange background, except W10-1 or W47 (CA) (Highway-Rail Grade Crossing Advance Warning) sign shall have black legend and border on yellow background. Orange background on construction area signs shall be fluorescent orange.

Repair to construction area sign panels will not be allowed, except when approved by the Engineer. At nighttime under vehicular headlight illumination, sign panels that exhibit irregular luminance, shadowing or dark blotches shall be immediately replaced at the Contractor's expense.

The Contractor shall notify the appropriate regional notification center for operators of subsurface installations at least 2 business days, but not more than 14 days, prior to commencing excavation for construction area sign posts. The regional notification centers include, but are not limited to, the following:

Notification Center	Telephone Number
Underground Service Alert 811	811

Excavations required to install construction area signs shall be performed by hand methods without the use of power equipment, except that power equipment may be used if it is determined there are no utility facilities in the area of the proposed post holes. The post hole diameter, if backfilled with portland cement concrete, shall be at least 4 inches greater than the longer dimension of the post cross section.

Construction area signs placed within 15 feet from the edge of the travel way shall be mounted on stationary mounted sign supports as specified in "Construction Area Traffic Control Devices" of these Special Provisions.

The Contractor shall maintain accurate information on construction area signs. Signs that are no longer required shall be immediately covered or removed. Signs that convey inaccurate information shall be immediately replaced or the information shall be corrected. Covers shall be replaced when they no longer cover the signs properly. The Contractor shall immediately restore to the original position and location any sign that is displaced or overturned, from any cause, during the progress of work.

The term "construction area signs" shall include temporary object markers required for the direction of public traffic through or around the work during construction. Object markers

listed or designated on the plans as construction area signs shall be considered to be signs and shall be furnished, erected, maintained, and removed by the Contractor in the same manner specified for construction area signs.

Object markers shall be in conformance with the details shown on the plans and the provisions in Section 82, "Markers and Delineators," of the Standard Specifications.

Marker panels for Type N (CA) object markers shall conform to the provisions for sign panels for stationary mounted signs.

Orange background on construction area signs shall be fluorescent orange.

Payment

Full compensation for furnishing and installing Construction Area signs, including removal and disposal upon project completion, is included in the contract lump sum price paid for construction area signs**,** and no separate payment will be made therefore.

10-17 Traffic Management Plan

The Contractor shall submit a Traffic Management Plan (TMP) to the Engineer for approval.

The TMP shall contain detailed plans for managing traffic for all major work activities and shall contain the following:

1. Descriptions of scheduled traffic control implementation as a result of all construction activities.
2. A description for planned lane closure and lanes to be affected – include Calendar dates.
3. Description and location of planned construction employees parking areas within the Areas for Contractor's Use.
4. Description and estimated traffic volume projections of construction employees entering and exiting the Project site.
5. Description of work and construction sequence.
6. Description and estimated traffic volume projections expected to and from laydown and storage areas of each of the following construction vehicles: tractors, trailers, dump, concrete trucks, delivery trucks, heavy or wide oversized loads. Traffic volume projects shall include a description of planned haul routes within the Presidio. The

Contractor's planned haul routes must not conflict with other construction work by others.

Delivery and Hauling Of Material

Delivery and hauling of all materials to construct the Project, whether to or within the project limits shall only be permitted at the access locations and during the hours on Chart No. A, "Delivery and Hauling Material Requirements," of this special provision.

Submittals

Within 15 days after contract approval, the Contractor shall submit 3 copies of the TMP to the Engineer. The Contractor shall allow 5 days for the Engineer's review. If revisions are required, the Engineer will provide comments and specify the date that the review stopped. The Contractor shall revise and resubmit the TMP within 5 days of receipt of the Engineer's comments. The Engineer's review will resume when the complete TMP is resubmitted. When the Engineer approves the TMP, the Contractor shall submit 4 copies of the approved TMP to the Engineer. The Contractor may proceed with construction activities if the Engineer conditionally approves the TMP while minor revisions are being completed. The Contractor shall not perform work that may cause water pollution until the TMP has been approved by the Engineer.

The Engineer's review and approval shall not waive any contract requirements and shall not relieve the Contractor from complying with Federal, State and local laws, regulations, and requirements.

If there is a change in construction schedule or activities, the Contractor shall prepare an amendment to the TMP to identify additional major work activities. The Contractor shall submit the amendment to the Engineer for review within a time agreed to by the Engineer not to exceed the number of days specified for the initial submittal of the TMP. The Engineer will review the amendment within the same time allotted for the review of the initial submittal of the TMP.

The Contractor shall keep a copy of the approved TMP at the job site. The TMP shall be made available when requested by the Engineer. Requests from the public shall be directed to the Engineer.

Implementation Requirements

The Contractor's responsibility for TMP implementation shall continue throughout any temporary suspension of work ordered in conformance with the provisions in Section 8-1.05, "Temporary Suspension of Work," of the Standard Specifications.

If the Contractor or the Engineer identifies a deficiency in the implementation of the approved TMP, the deficiency shall be corrected immediately, unless an agreed date for correction is approved in writing by the Engineer.

If the Contractor fails to conform to the provisions of this section, "Traffic Management Plan," the Engineer may order the suspension of work until the project complies with the requirements of this section.

Payment

The contract lump sum price paid for traffic management plan shall include full compensation for furnishing all labor, materials, tools, equipment, and incidentals and for doing all the work involved in preparing, obtaining approval of, and amending the traffic management plan.

10-18 Maintaining Traffic

Maintaining traffic shall conform to the provisions in Sections 7-1.08, "Public Convenience," Section 7-1.09, "Public Safety," and Section 12, "Construction Area Traffic Control Devices," of the Standard Specifications and these Special Provisions.

Closure is defined as the closure of a traffic lane or lanes, including shoulder, ramp or connector lanes, within a single traffic control system.

Closures shall conform to the provisions in "Traffic Control System for Lane Closure" of these Special Provisions.

Work that interferes with public traffic shall be limited to the hours when lane closures are allowed, except for work required under Sections 7-1.08, "Public Convenience," and Section 7-1.09, "Public Safety."

The full width of the traveled way shall be open for use by public traffic as shown in the table "Lane Closure Restriction for Designated Legal Holidays and Special Days" included in this section, "Maintaining Traffic."

Designated legal holidays are: January 1st, the third Monday in February, the last Monday in May, July 4th, the first Monday in September, November 11th, Thanksgiving Day, and December 25th. When a designated legal holiday falls on a Sunday, the following Monday shall be a designated legal holiday. When November 11th falls on a Saturday, the preceding Friday shall be a designated legal holiday.

Special days are: Mother's Day and Easter weekend, including Friday.

The maximum length of a single stationary lane closure shall be 1.5 miles.

Not more than 1 separate stationary lane closure will be allowed at one time.

Ramps adjacent to the closed freeway lane may be closed. Lanes may be closed only if signed for closing 7 days in advance. The Contractor shall notify the Engineer not less than 5 business days prior to signing the freeway. If the freeway lane is not closed on the posted day, the closure shall be changed to allow a 3-business-day advance notice before closure.

Freeway closure charts are for the erection and removal of falsework, completing the Canopy work, remove and replace crash cushions, painting, and other work as approved in writing by the Engineer.

Personal vehicles of the Contractor's employees shall not be parked on the traveled way or shoulders including sections closed to public traffic.

When work vehicles or equipment are parked within 6 feet of a traffic lane to perform active construction, the shoulder area shall be closed as shown on the plans.

If minor deviations from the lane requirement charts are required, a written request shall be submitted to the Engineer at least 15 days before the proposed date of the closure. The Engineer may approve the deviations if there is no significant increase in the cost to the State and if the work can be expedited and better serve the public traffic.

Chart No. 1
Freeway/Expressway Lane Requirements

County: ***Alameda*** | Route/Direction: I-80 WB | PM: **2.0**

Closure Limits: **San Francisco Oakland Bay Bridge Toll Plaza – lanes number. 1,2 3, 4, 5 & 6**

FROM HOUR TO HOUR	24	1	2	3	4	5	6	7	8	9	10	11	12	13	14	15	1	17	18	19	20	21	22	23	24
Mondays through Thursdays	C	C	C	C	C																	C	C	C	
Fridays	C	C	C	C	C																		C	C	
Saturdays	C	C	C	C	C	C	C																C	C	
Sundays	C	C	C	C	C	C	C																C	C	

Legend:

C	Freeway lane may be closed.
	No lane closure is permitted.

REMARKS: **Maximum number of lanes allowed for closure during each traffic control operation is 3 lanes total. Lane closure in addition to the above shall require approval in writing from the RE. Closure of lanes number 1& 2 will require directing of traffic from HOV lanes from 880 to other available traffic lanes.**

Chart No. 2
Freeway/Expressway Lane Requirements

County: ***Alameda*** | Route/Direction: **I-80 WB** | PM: **2.0**

Closure Limits: **San Francisco Oakland Bay Bridge Toll Plaza –Lanes No. 7, 8, 9, 10 & 11**

FROM HOUR TO HOUR	24	1	2	3	4	5	6	7	8	9	10	11	12	13	14	15	1	17	18	19	20	21	22	23	24
Mondays through Thursdays	C	C	C	C	C																	C	C	C	
Fridays	C	C	C	C	C																	C	C	C	
Saturdays	C	C	C	C	C																	C	C	C	
Sundays	C	C	C	C	C																	C	C	C	

Legend:

C	Freeway lane may be closed.
	No lane closure is permitted.

REMARKS: **Maximum number of lanes allowed for closure during each traffic control operation is 3 lanes total. Lane closure in addition to the above shall require approval in writing from the RE.**

Chart No. 3
Freeway/Expressway Lane Requirements

County: ***Alameda*** | Route/Direction: **I-80 WB** | PM: **2.0**

Closure Limits: **San Francisco Oakland Bay Bridge Toll Plaza - Lanes No. 12, 13, 14, 15, & 16**

FROM HOUR TO HOUR	24	1	2	3	4	5	6	7	8	9	10	11	12	13	14	15	1	17	18	19	20	21	22	23	24
Mondays through Thursdays	C	C	C	C	C															C	C	C	C	C	
Fridays	C	C	C	C	C																C	C	C	C	
Saturdays	C	C	C	C	C	C	C															C	C	C	
Sundays	C	C	C	C	C	C	C															C	C	C	

Legend:

C	Freeway lane may be closed.
	No lane closure is permitted.

REMARKS: **Maximum number of lanes allowed for closure during each traffic control operation is 3 lanes total. Lane closure in addition to the above shall require approval in writing from the RE.**

Chart No. 4
Freeway/Expressway Lane Requirements

County: ***Alameda*** | Route/Direction: **I-80 WB** | PM: **2.0**

Closure Limits: **San Francisco Oakland Bay Bridge Toll Plaza – Lanes No. 17, & 18**

FROM HOUR TO HOUR	24	1	2	3	4	5	6	7	8	9	10	11	12	13	14	15	1	17	18	19	20	21	22	23	24
Mondays through Thursdays	C	C	C	C	C																C	C	C	C	
Fridays	C	C	C	C	C																C	C	C	C	
Saturdays	C	C	C	C	C	C																C	C	C	
Sundays	C	C	C	C	C	C																C	C	C	

Legend:

C	Freeway lane may be closed.
	No lane closure is permitted.

REMARKS: **This lane closure may require the temporary closure of lane No. 7 of I-80 approach to direct the traffic towards the open lanes. If at Toll Booths, freeway lanes number 17, 18 & 19 are closed for construction activates at the same time, then temporary closure of lane No. 7 of I-80 approach to direct the traffic to open lanes may be required.**

Chart No. 5
Freeway/Expressway Lane Requirements

County: ***Alameda*** | Route/Direction: **I-80 WB** | PM: **2.0**

Closure Limits: **San Francisco Oakland Bay Bridge Toll Plaza - Lanes No. 19, & 20**

FROM HOUR TO HOUR	24	1	2	3	4	5	6	7	8	9	10	11	12	13	14	15	1	17	18	19	20	21	22	23	24
Mondays through Thursdays	C	C	C	C	C															C	C	C	C	C	
Fridays	C	C	C	C	C															C	C	C	C	C	
Saturdays	C	C	C	C	C	C	C												C	C	C	C	C	C	
Sundays	C	C	C	C	C	C	C												C	C	C	C	C	C	

Legend:

C	Freeway lane may be closed.
	No lane closure is permitted.

REMARKS: **If both lanes are required to be closed, then it will require the traffic from HOV (I-80 and 880) to be directed to the open lanes.**

Chart No. 6
Freeway/Expressway Lane Requirements

County: ***Alameda*** | Route/Direction: **880** | PM: **34.5**

Closure Limits: **I-880 Connector Carpool lane bypass to the San Francisco Oakland Bay Bridge Toll Plaza**

FROM HOUR TO HOUR	24	1	2	3	4	5	6	7	8	9	10	11	12	13	14	15	1	17	18	19	20	21	22	23	24
Mondays through Thursdays	C	C	C	C	C																C	C	C	C	
Fridays	C	C	C	C	C																C	C	C	C	
Saturdays	C	C	C	C	C	C															C	C	C	C	
Sundays	C	C	C	C	C	C															C	C	C	C	

Legend:

C	Freeway lane may be closed.
	No lane closure is permitted.

REMARKS:

Chart No. 7
Freeway/Expressway Lane Requirements

County: ***Alameda***	Route/Direction: **I-80** Lane adjacent to the Gore **at Radio/W. Grand Ave Exit**	PM: **2.4**

Closure Limits: **I-880 Connector Carpool lane bypass to the San Francisco Oakland Bay Bridge Toll Plaza**

FROM HOUR TO HOUR	24	1	2	3	4	5	6	7	8	9	10	11	12	13	14	15	16	17	18	19	20	21	22	23	24
Mondays through Thursdays	C	C	C	C	C																	C	C	C	
Fridays	C	C	C	C	C																	C	C	C	
Saturdays	C	C	C	C	C	C															C	C	C	C	
Sundays	C	C	C	C	C	C															C	C	C	C	

Legend:

C	Freeway lane may be closed.
	No lane closure is permitted.

REMARKS: **For Construction of Crash Cushion No. 19**

Chart No. 8
Freeway/Expressway Lane Requirements

County: ***Alameda***	Route/Direction: **I-80** Lane adjacent to the Gore **at Exit to Admin Building**	PM: **2.4**

Closure Limits: **I-880 Connector Carpool lane bypass to the San Francisco Oakland Bay Bridge Toll Plaza**

FROM HOUR TO HOUR	24	1	2	3	4	5	6	7	8	9	10	11	12	13	14	15	16	17	18	19	20	21	22	23	24
Mondays through Thursdays	C	C	C	C	C																	C	C	C	
Fridays	C	C	C	C	C																	C	C	C	
Saturdays	C	C	C	C	C	C															C	C	C	C	
Sundays	C	C	C	C	C	C															C	C	C	C	

Legend:

C	Freeway lane may be closed.
	No lane closure is permitted.

REMARKS: **For Construction of Crash Cushion No. 20**

Maximum number of lanes closed per each scheduled closure shall be limited to four contiguous lanes unless otherwise approved by the Engineer.

Local authorities shall be notified at least 5 business days before work begins. The Contractor shall cooperate with local authorities to handle traffic through the work area and shall make arrangements to keep the work area clear of parked vehicles.

The SC6-3(CA) or SC6-4(CA) signs shall be installed at least 7 days before closing the connector or ramp, but not more than 15 days before the connector or ramp closure. The Contractor shall notify the Engineer at least 2 business days before installing the SC6-3(CA) or SC6-4(CA) signs.

Accurate information shall be maintained on the SC6-3(CA) or SC6-4(CA) signs. The SC6-3(CA) or SC6-4(CA) signs, when no longer required, shall be immediately covered or removed.

Freeways lanes may be closed only if signed for closing 7 days in advance. The Contractor shall notify the Engineer not less than 5 business days prior to signing the freeway. If the freeway is not closed on the posted day, the closure shall be changed to allow a 3-business-day advance notice before closure.

Personal vehicles of the Contractor's employees shall not be parked within the right of way except in the area designated on the plans as staging and laydown area. Other areas may be designated for the Contractor’s use as approved in writing by the Engineer.

When work vehicles or equipment are parked within 6 feet of a traffic lane to perform active construction, the shoulder area shall be closed with fluorescent orange traffic cones or portable delineators placed on a taper in advance of the parked vehicles or equipment and along the edge of the pavement at 25-foot intervals to a point not less than 25 feet past the last vehicle or piece of equipment. A minimum of 9 traffic cones or portable delineators shall be used for the taper. A W20-1 (ROAD WORK AHEAD) or W21-5b (RIGHT/LEFT SHOULDER CLOSED AHEAD) or C24 (CA) (SHOULDER WORK AHEAD) sign shall be mounted on a crashworthy portable sign support with flags. The sign shall be placed where designated by the Engineer. The sign shall be a minimum of 48" x 48" in size. The Contractor shall immediately restore to the original position and location a traffic cone or delineator that is displaced or overturned, during the progress of work.

If minor deviations from the lane requirement charts are required, a written request shall be submitted to the Engineer at least 15 days before the proposed date of the closure. The Engineer may approve the deviations if there is no significant increase in the cost to the State and if the work can be expedited and better serve the public traffic.

Full compensation for furnishing, erecting, maintaining, and removing and disposing of the C43(CA), SC6-3(CA), SC6-4(CA), W20-1, W21-5b, and C24(CA) signs shall be considered as included in the contract lump sum price paid for construction area signs and no additional compensation will be allowed therefore.

10-19 Closure Requirements and Conditions

Closures shall conform to the provisions in "Maintaining Traffic" of these Special Provisions and these Special Provisions.

Closure Schedule

A written schedule of planned closures for the next week period, defined as Sunday noon through the following Sunday noon, shall be submitted by noon each Monday. A written schedule shall be submitted not less than 25 days and not more than 125 days before the anticipated start of any operation that will:

1. Reduce horizontal clearances, traveled way, including shoulders, to two lanes or less due to such operations as temporary barrier placement and paving
2. Reduce the vertical clearances available to the public due to such operations as pavement overlay, overhead sign installation, or falsework or girder erection

The Closure Schedule shall show the locations and times of the proposed closures. The Closure Schedule request forms furnished by the Engineer shall be used. Closure Schedules submitted to the Engineer with incomplete or inaccurate information will be rejected and returned for correction and resubmittal. The Contractor will be notified of disapproved closures or closures that require coordination with other parties as a condition of approval.

Closure Schedule amendments, including adding additional closures, shall be submitted by noon to the Engineer, in writing, at least 3 business days in advance of a planned closure. Approval of Closure Schedule amendments will be at the discretion of the Engineer. The Engineer shall be notified of cancelled closures 2 business days before the date of closure. Closures that are cancelled due to unsuitable weather may be rescheduled at the discretion of the Engineer.

Contingency Plan

A detailed contingency plan shall be prepared for reopening closures to public traffic. If required by "Beginning of Work, Time of Completion and Liquidated Damages" of these Special Provisions, the contingency plan shall be submitted to the Engineer before work at the job site begins. Otherwise, the contingency plan shall be submitted to the Engineer within one business day of the Engineer's request.

Late Reopening Of Closures

If a closure is not reopened to public traffic by the specified time, work shall be suspended in conformance with the provisions in Section 8-1.05, "Temporary Suspension of Work," of the Standard Specifications. No further closures are to be made until the Engineer has accepted a work plan, submitted by the Contractor, that will insure that future closures will be reopened to public traffic at the specified time. The Engineer will have 2 business days to accept or reject the Contractor's proposed work plan. The Contractor will not be entitled to compensation for the suspension of work resulting from the late reopening of closures.

Compensation

The Engineer shall be notified of delays in the Contractor's operations due to the following conditions, and if, in the opinion of the Engineer, the Contractor's controlling operation is delayed or interfered with by reason of those conditions, and the Contractor's loss due to that delay could not have been avoided by rescheduling the affected closure or by judicious handling of forces, equipment and plant, the delay will be considered a right of way delay and will be compensated in conformance with the provisions in Section 8-1.09, "Right of Way Delays," of the Standard Specifications:

1. The Contractor's proposed Closure Schedule is denied and his planned closures are within the time frame allowed for closures in "Maintaining Traffic" of these Special Provisions, except that the Contractor will not be entitled to compensation for amendments to the Closure Schedule that are not approved.
2. The Contractor is denied a confirmed closure.

Should the Engineer direct the Contractor to remove a closure before the time designated in the approved Closure Schedule, delay to the Contractor's schedule due to removal of the closure will be considered a right of way delay and compensation for the delay will be determined in conformance with the provisions in Section 8-1.09, "Right of Way Delays," of the Standard Specifications.

Closure Schedule amendments, including adding additional closures, shall be submitted by noon to the Engineer, in writing, at least 3 business days in advance of a planned closure. Approval of Closure Schedule amendments will be at the discretion of the Engineer.

The Engineer shall be notified of cancelled closures 2 business days before the date of closure.

Closures that are cancelled due to unsuitable weather may be rescheduled at the discretion of the Engineer.

Contingency Plan

A detailed contingency plan shall be prepared for reopening closures to public traffic. If required by "Beginning of Work, Time of Completion and Liquidated Damages" of these Special Provisions, the contingency plan shall be submitted to the Engineer before work at the job site begins. Otherwise, the contingency plan shall be submitted to the Engineer within one business day of the Engineer's request.

Late Reopening Of Closures

If a closure is not reopened to public traffic by the specified time, work shall be suspended in conformance with the provisions in Section 8-1.05, "Temporary Suspension of Work," of the Standard Specifications. No further closures are to be made until the Engineer has accepted a work plan, submitted by the Contractor, that will insure that future closures will be reopened to public traffic at the specified time. The Engineer will have 2 business days to accept or reject the Contractor's proposed work plan. The Contractor will not be entitled to compensation for the suspension of work resulting from the late reopening of closures.

For each 10-minute interval, or fraction thereof past the time specified to reopen the closure, the Department will deduct the amount per interval shown below from moneys due or that may become due the Contractor under the contract. Damages are limited to 5 percent of project cost per occurrence and will not be assessed when the Engineer requests that the closure remain in place beyond the scheduled pickup time.

Type of Facility	Route or Segment	Period	Damages/interval ($)
Mainline	I-80	1st half hour 2nd half hour 2nd hour and beyond	$**1000** / 10 minutes $**1000** / 10 minutes $**1000** / 10 minutes
Connector	880	1st half hour 2nd half hour 2nd hour and beyond	$**1000**/ 10 minutes $**1000** / 10 minutes $**1000** / 10 minutes

Compensation

The Engineer shall be notified of delays in the Contractor's operations due to the following conditions, and if, in the opinion of the Engineer, the Contractor's controlling operation is delayed or interfered with by reason of those conditions, and the Contractor's loss due to that delay could not have been avoided by rescheduling the affected closure or by judicious handling of forces, equipment and plant, the delay will be considered a right of way delay and will be compensated in conformance with the provisions in Section 8-1.09, "Right of Way Delays," of the Standard Specifications:

1. The Contractor's proposed Closure Schedule is denied and his planned closures are within the time frame allowed for closures in "Maintaining Traffic" of these Special Provisions, except that the Contractor will not be entitled to compensation for amendments to the Closure Schedule that are not approved.
2. The Contractor is denied a confirmed closure.

Should the Engineer direct the Contractor to remove a closure before the time designated in the approved Closure Schedule, delay to the Contractor's schedule due to removal of the closure will be considered a right of way delay and compensation for the delay will be determined in conformance with the provisions in Section 8-1.09, "Right of Way Delays," of the Standard Specifications.

10-20 Impact Attenuator Vehicle

General

Summary

Work includes protecting traffic and workers by using impact attenuator vehicle as a shadow vehicle when placing and removing components of a traffic control system, and when performing a moving lane closure.

Comply with Section 12-3.03, "Flashing Arrow Signs," of the Standard Specifications. Impact attenuator vehicle must comply with the following test levels under National Cooperative Highway Research Program 350:

1. Test level 3 for pre-construction posted speed limit of 50 mph or more
2. Test levels 2 or 3 for pre-construction posted speed limit of 45 mph or less

Comply with the attenuator manufacturer's recommendations for:

1. Support truck
2. Trailer-mounted operation
3. Truck-mounted operation

Definitions

Impact Attenuator Vehicle: Support truck towing a deployed attenuator mounted to a trailer or support truck with a deployed attenuator mounted to the support truck.

Submittals

Upon request, submit a Certificate of Compliance for attenuator to the Engineer under Section 6-1.07, "Certificates of Compliance," of the Standard Specifications.

Quality Control and Assurance

Attenuator must be a brand listed on the Department's pre-approved list under Highway Safety Features at:

http://www.dot.ca.gov/hq/esc/approved_products_list/

Materials

The combined weight of the support truck and the attenuator must be at least 19,800 pounds, except the weight of the support truck must not be less than 16,100 pounds or greater than 26,400 pounds.

If using the Trinity MPS-350 truck-mounted attenuator, the support truck must not have any underneath fuel tank mounted within 10'-6" of the rear of the support truck.

Each impact attenuator vehicle must:

1. Have standard brake lights, taillights, sidelights, and turn signals
2. Have an inverted "V" chevron pattern placed across the entire rear of the attenuator composed of alternating 4 inch wide non-reflective black stripes and 4 inch wide yellow retroreflective stripes sloping at 45 degrees
3. Have a Type II flashing arrow sign
4. Have a flashing or rotating amber light
5. Have an operable 2-way communication system for maintaining contact with workers

Construction

Use impact attenuator vehicle to follow behind equipment and workers who are placing and removing components of a traffic control system for a lane closure or a ramp closure. Flashing arrow sign must be operating in arrow mode during this activity. Follow at a distance to prevent intrusion into the workspace from passing traffic.

After placing components of a traffic control system for a lane closure or a ramp closure you may use impact attenuator vehicle in a closed lane and in advance of a work area to protect traffic and workers.

Use impact attenuator vehicle as a shadow vehicle under traffic control for a moving lane closure.

Secure objects including equipment, tools and ballast on impact attenuator vehicle to prevent loosening upon impact by an errant vehicle.

Do not use a damaged attenuator in the work. Replace, at Contractor's expense, an attenuator damaged from an impact during work.

Measurement and Payment

Full compensation for furnishing and operating impact attenuator vehicle shall be considered as included in the contract lump sum price paid for traffic control system, and no additional compensation will be allowed therefore.

10-21 Traffic Control System For Lane Closure

A traffic control system shall consist of closing traffic lanes and ramps in conformance with the details shown on the plans, the provisions in Section 12, "Construction Area Traffic Control Devices," of the Standard Specifications, the provisions under "Maintaining Traffic" and "Construction Area Signs" of these Special Provisions, and these Special Provisions.

The provisions in this section will not relieve the Contractor of responsibility for providing additional devices or taking measures as may be necessary to comply with the provisions in Section 7-1.09, "Public Safety," of the Standard Specifications.
During traffic stripe operations and pavement marker placement operations using bituminous adhesive, traffic shall be controlled, at the option of the Contractor, with either stationary or moving lane closures. During other operations, traffic shall be controlled with stationary lane closures. Attention is directed to the provisions in Section 84-1.04, "Protection From Damage," and Section 85-1.06, "Placement," of the Standard Specifications.

If components in the traffic control system are displaced or cease to operate or function as specified, from any cause, during the progress of the work, the Contractor shall immediately repair the components to the original condition or replace the components and shall restore the components to the original location.

Stationary Lane Closure

When lane and ramp closures are made for work periods only, at the end of each work period, components of the traffic control system, except portable delineators placed along open trenches or excavation adjacent to the traveled way, shall be removed from the traveled way and shoulder. If the Contractor so elects, the components may be stored at selected central locations, designated by the Engineer within the limits of the highway right of way.

Each vehicle used to place, maintain and remove components of a traffic control system on multilane highways shall be equipped with a Type II flashing arrow sign which shall be in operation when the vehicle is being used for placing, maintaining or removing the components. Vehicles equipped with Type II flashing arrow sign not involved in placing, maintaining or removing the components when operated within a stationary type lane closure shall only display the caution display mode. The sign shall be controllable by the operator of the vehicle while the vehicle is in motion. The flashing arrow sign shown on the plans shall not be used on the vehicles which are doing the placing, maintaining and removing of components of a traffic control system and shall be in place before a lane closure requiring the sign's use is completed.

Moving Lane Closure

Flashing arrow signs used in moving lane closures shall be truck-mounted. Changeable message signs used in moving lane closure operations shall conform to the provisions in Section 12-3.12, "Portable Changeable Message Signs," of the Standard Specifications, except the signs shall be truck-mounted and the full operation height of the bottom of the sign may be less than 7 feet above the ground, but should be as high as practicable.

Truck-mounted attenuators (TMA) for use in moving lane closures shall be any of the following approved
models, or equal:

1. Hexfoam TMA Series 3000, Alpha 1000 TMA Series 1000, and Alpha 2001 TMA Series 2001, manufactured by Energy Absorption Systems, Inc., 35 East Wacker Drive, Suite 1100, Chicago, IL 60601:
    a. Northern California: Traffic Control Service, Inc., 8585 Thys Court, Sacramento, CA 95828, telephone (800) 884-8274, FAX (916) 387-9734
    b. Southern California: Traffic Control Service, Inc., 1818 E. Orangethorpe, Fullerton, CA 92831- 5324, telephone (800) 222-8274, FAX (714) 526-9501
2. Cal T–001 Model 2 or Model 3, manufacturer and distributor: Hexcel Corporation, 11711 Dublin Boulevard, P.O. Box 2312, Dublin, CA 94568, telephone (925) 551–4900
3. Renco Rengard Model Nos. CAM 8–815 and RAM 8–815, manufacturer and distributor: Renco Inc.,1582 Pflugerville Loop Road, P.O. Box 730, Pflugerville, TX 78660–0730, telephone (800) 654–8182

Each TMA shall be individually identified with the manufacturer's name, address, TMA model number, and a specific serial number. The names and numbers shall each be a minimum 1/2 inch high and located on the left (street) side at the lower front corner. The TMA shall have a message next to the name and model number in ½ inch high letters which states, "The bottom of this TMA shall be _____ inches ± _____ inch above the ground at all points for proper impact performance." Any TMA which is damaged or appears to be in poor condition shall not be used

unless recertified by the manufacturer. The Engineer shall be the sole judge as to whether used TMAs supplied under this contract need recertification. Each unit shall be certified by the manufacturer to meet the requirements for TMA in conformance with the standards established by the Transportation Laboratory.

Approvals for new TMA designs proposed as equal to the above approved models shall be in conformance with the procedures (including crash testing) established by the Transportation Laboratory. For information regarding submittal of new designs for evaluation contact: Transportation Laboratory, 5900 Folsom Boulevard, Sacramento, California 95819.

New TMAs proposed as equal to approved TMAs or approved TMAs determined by the Engineer to need recertification shall not be used until approved or recertified by the Transportation Laboratory.

Payment

The contract lump sum price paid for traffic control system shall include full compensation for furnishing all labor, materials (including signs), tools, equipment, and incidentals, and for doing all the work involved in placing, removing, storing, maintaining, moving to new locations, replacing and disposing of the components of the traffic control system shown on the plans, as specified in the Standard Specifications and these Special Provisions, and as directed by the Engineer.

The adjustment provisions in Section 4-1.03, "Changes," of the Standard Specifications shall not apply to the item of traffic control system. Adjustments in compensation for traffic control system will be made only for increased or decreased traffic control system required by changes ordered by the Engineer and will be made on the basis of the cost of the increased or decreased traffic control necessary. The adjustment will be made on a force account basis as provided in Section 9-1.03, "Force Account Payment," of the Standard Specifications for increased work and estimated on the same basis in the case of decreased work.

Traffic control system required by work which is classed as extra work, as provided in Section 4-1.03D of the Standard Specifications, will be paid for as a part of the extra work.

10-22 Portable Changeable Message Signs

General

Summary

Work includes furnishing, placing, operating, maintaining, and removing portable changeable message signs.
Comply with Section 12-3.12 "Portable Changeable Message Signs," of the Standard Specifications.

Definitions

Useable Shoulder Area: Paved or unpaved contiguous surface adjacent to the traveled way with:

1. Sufficient weight bearing capacity to support portable changeable message sign
2. Slope not greater than 6:1 (horizontal:vertical)

Submittals

Upon request, submit a Certificate of Compliance for each portable changeable message sign under Section 6-1.07, "Certificates of Compliance," of the Standard Specifications.

Quality Control and Assurance

Comply with the manufacturer's operating instructions for portable changeable message sign.

Approaching drivers must be able to read the entire message for all phases at least twice at the posted speed limit before passing portable changeable message sign. You may use more than 1 portable changeable message sign to meet this requirement.

Only display the message shown on the plans or ordered by the Engineer or specified in these Special Provisions.

Materials

The text of the message displayed on portable changeable message sign must not scroll, or travel horizontally or vertically across the face of the message panel.

Construction

Continuously repeat the entire message in no more than 2 phases of at least 3 seconds per phase.

If useable shoulder area is at least 15 feet wide, the displayed message on portable changeable message sign must be minimum 18-inch character height. If useable shoulder area is less than 15 feet wide, you may use a smaller message panel with minimum 12-inch character height to prevent encroachment in the traveled way.

Start displaying the message on portable changeable message sign 15 minutes before closing the lane.

In addition to the portable changeable message signs shown on the plans, place two portable changeable message signs for each lane closure and one for each ramp or connector closure at the locations designated by the Engineer.

Place portable changeable message sign as far from the traveled way as practicable where it is legible to traffic and does not encroach on the traveled way. Place portable changeable sign before or at the crest of vertical roadway curvature where it is visible to approaching traffic.

Avoid placing portable changeable message sign within or immediately after horizontal roadway curvature. Where possible, place portable changeable message sign behind guardrail or temporary railing (Type K).

Except where placed behind guardrail or temporary railing (Type K) use traffic control for shoulder closure to delineate portable changeable message sign.

Remove portable changeable message sign when not in use.

Measurement and Payment

The contract unit price paid for portable changeable message signs includes full compensation for furnishing all labor, materials, tools, equipment, and incidentals, and for doing all the work involved in furnishing, placing, operating, modifying messages, moving to new locations, maintaining portable changeable message signs, complete in place, including transporting from location to location, removing, and repairing or replacing defective or damaged portable changeable message signs**,** as shown on the plans, as specified in the Standard Specifications and these Special Provisions, and as directed by the Engineer.

Portable changeable message signs ordered by the Engineer in excess of the number shown on the plans or specified in these Special Provisions will be paid for as extra work under Section 4-1.03D, "Extra Work," of the Standard Specifications.

10-23 Maintain Toll Plaza Signal System

For this contract Toll Plaza Signal system shall mean all traffic signals, EMS, CMS, and lighting associated with the Bay Bridge Toll Plaza

This work shall consist of maintaining Toll Plaza traffic signals and lighting and shall be in conformance with "Temporary Traffic Signal System," the provisions in "Maintaining Traffic" of these Special Provisions, the provisions in Section 86, "Electrical Systems," of the Standard Specifications, and these Special Provisions.

The provisions in this section shall not relieve the Contractor from the responsibility to provide the additional devices or take the measures as may be necessary to conform to the provisions in Section 7-1.09, "Public Safety," of the Standard Specifications.

Other materials and equipment for a temporary signal system including, but not limited to, temporary signs and electronic messaging signs, flashing beacons, signal heads, signal head supports, luminaries, conductors, and hardware shall be furnished by the Contractor at the Contractor’s expense.

Materials and equipment to be used in the temporary signal system shall be either new or used suitable for the intended use.

Each signal face shall be oriented to be clearly visible to traffic approaching from the direction which the signal is intended to control.

Operation

Toll Plaza signal system shall be maintained so that there is no interruption in the operation of the signals. Any interruptions of the signal system shall not be allowed unless prior to interruption the Contractor has received approval in writing from the Engineer.

Unless otherwise directed by the Engineer, the system shall be uninterrupted on a continuous 24-hour basis.

Maintaining Signal System

Maintaining signal system, except the controller assembly, shall be the sole responsibility of the Contractor.

If components in the signal system are damaged, displaced or cease to operate or function as specified, from any cause during the progress of the work, the Contractor shall immediately repair the components to the original condition or replace the components and shall restore the components to the original location. Components shall include temporary signs and electronic messaging signs, generator, flashing beacons, signal equipment and all incidentals required to make the signal system functional.

In the event the signal system is out of operation, for any reason, the Contractor shall provide complete traffic control devices including flaggers, at the Contractor's expense, to maintain traffic control until the traffic signals are returned to service.

Bonding and Grounding

Flashing beacons, signal heads, standards with metal bases and the controller cabinet shall be mechanically and electrically secure to form a continuous system effectively grounded by the grounding conductor.
Generator neutral grounding shall conform to the provisions for multiple service points in Section 86-2.10, "Bonding and Grounding," of the Standard Specifications.

Payment

Full compensation for furnishing all labor, materials, tools, equipment, and incidentals, and for doing all the work involved in maintaining Toll Plaza signal system and temporary flashing beacon system, as shown on the plans, as specified in the Standard Specifications and these Special Provisions, and as directed by the Engineer shall be considered as included in the contract price paid for traffic control system and no additional compensation will be allowed therefore.

10-24 Temporary Crash Cushion Module

This work shall consist of furnishing, installing, and maintaining sand filled temporary crash cushion modules in groupings or arrays at each location shown on the plans, as specified in these Special Provisions or where designated by the Engineer. The grouping or array of sand filled modules shall form a complete sand filled temporary crash cushion in conformance with the details shown on the plans and these Special Provisions.

Temporary crash cushions shall be secured in place prior to commencing work for which the temporary crash cushions are required.

Whenever the work or the Contractor's operations establishes a fixed obstacle, the exposed fixed obstacle shall be protected with a sand filled temporary crash cushion. The sand filled temporary crash cushion shall be in place prior to opening the lanes adjacent to the fixed obstacle to public traffic. Attention is directed to Section 10-26, “Crash Cushion Quaguard-Quaguard System” of these Special Provisions.

Sand filled temporary crash cushions shall be maintained in place at each location, including times when work is not actively in progress. Sand filled temporary crash cushions may be removed during a work period for access to the work provided that the exposed fixed obstacle is 15 feet or more from a lane carrying public traffic and the temporary crash cushion is reset to protect the obstacle prior to the end of the work period in which the fixed obstacle was exposed. When no longer required, as determined by the Engineer, sand filled temporary crash cushions shall be removed from the site of the work.

Sand filled temporary crash cushion modules shall be one of the following, or equal, and be manufactured after March 31, 1997:

1. Energite III and Fitch Inertial Modules, manufactured by Energy Absorption Systems, Inc., 35 East Wacker Drive, Suite 1100, Chicago, IL 60601:
   a. Northern California: Traffic Control Service, Inc., 8585 Thys Court, Sacramento, CA 95828, telephone (800) 884-8274, FAX (916) 387-9734
   b. Southern California: Traffic Control Service, Inc., 1818 E. Orangethorpe, Fullerton, CA 92831-5324, telephone (800) 222-8274, FAX (714) 526-9501
2. TrafFix Sand Barrels, manufactured by TrafFix Devices, Inc., 220 Calle Pintoresco, San Clemente, CA 92672, telephone (949) 361-5663, FAX (949) 361-9205
   a. Northern California: United Rentals, Inc., 1533 Berger Drive, San Jose, CA 95112, telephone (408) 287-4303, FAX (408) 287-1929

b. Southern California: Statewide Safety & Sign, Inc., P.O. Box 1440, Pismo Beach, CA 93448, telephone (800) 559-7080, FAX (805) 929-5786

3. CrashGard Model CC-48 Sand Barrels, manufactured by Plastic Safety Systems, Inc., 2444 Baldwin Road, Cleveland, OH 44104:
   a. Northern California:
      i. Capitol Barricade Safety & Sign, 6329 Elvas Ave, Sacramento, CA 95819, telephone (888) 868-5021, FAX (916) 451-5388
      ii. Sierra Safety, Inc., 9093 Old State Highway, New Castle, CA 95658, telephone (916) 663-2026, FAX (916) 663-1858
   b. Southern California: Hi Way Safety Inc., 13310 5th Street, Chino, CA 91710, telephone (909) 591-1781, FAX (909) 627-0999

Modules contained in each temporary crash cushion shall be of the same type at each location. The color of the modules shall be the standard yellow color, as furnished by the vendor, with black lids. The modules shall exhibit good workmanship free from structural flaws and objectionable surface defects. The modules need not be new. Good used undamaged modules conforming to color and quality of the types specified herein may be utilized. If used Fitch modules requiring a seal are furnished, the top edge of the seal shall be securely fastened to the wall of the module by a continuous strip of heavy duty tape.
Modules shall be filled with sand in conformance with the manufacturer's directions, and to the sand capacity in pounds for each module shown on the plans. Sand for filling the modules shall be clean washed concrete sand of commercial quality. At the time of placing in the modules, the sand shall contain no more than 7 percent water as determined by California Test 226.

Modules damaged due to the Contractor's operations shall be repaired immediately by the Contractor at the Contractor's expense. Modules damaged beyond repair, as determined by the Engineer, due to the Contractor's operations shall be removed and replaced by the Contractor at the Contractor's expense.

Temporary crash cushion modules may be placed on movable pallets or frames. Comply with dimensions shown on the plans. The pallets or frames shall provide a full bearing base beneath the modules. The modules and supporting pallets or frames shall not be moved by sliding or skidding along the pavement or bridge deck.

A Type R or P marker panel shall be attached to the front of the crash cushion as shown on the plans, when the closest point of the crash cushion array is within 12 feet of the traveled way. The marker panel, when required, shall be firmly fastened to the crash cushion with commercial quality hardware or by other methods determined by the Engineer.

At the completion of the project, temporary crash cushion modules, sand filling, pallets or frames, and marker panels shall become the property of the Contractor and shall be removed from the site of the work. Temporary crash cushion modules shall not be installed in the permanent work.

Temporary crash cushion modules placed in conformance with Section 7-1.09, "Public Safety," of the Standard Specifications will not be measured nor paid for.

Temporary crash cushion modules will be measured by the unit as determined from the actual count of modules used in the work or ordered by the Engineer at each location. Temporary crash cushion modules placed in conformance with Section 7-1.09, "Public Safety," of the Standard Specifications and modules placed in excess of the number specified or shown will not be measured nor paid for.

Repairing modules damaged by public traffic will be paid for as extra work as provided in Section 4-1.03D of the Standard Specifications. Modules damaged beyond repair by public traffic, when ordered by the Engineer, shall be removed and replaced immediately by the Contractor. Modules replaced due to damage by public traffic will be measured and paid for as temporary crash cushion module.

If the Engineer orders a lateral move of the sand filled temporary crash cushions and the repositioning is not shown on the plans, moving the sand filled temporary crash cushion will be paid for as extra work as provided in Section 4-1.03D of the Standard Specifications and these temporary crash cushion modules will not be counted for payment in the new position.

Full compensation for furnishing and installing temporary crash cushion module including all labor, materials (including sand, pallets or frames and marker panels), tools, equipment, and incidentals, and for doing all the work involved in furnishing, installing, maintaining, moving to new locations, and resetting during a work period for access to the work, and removing from the site of the work when no longer required (including those damaged by public traffic) sand filled temporary crash cushion modules, complete in place, as shown on the plans, as specified in the Standard Specifications and these Special Provisions, and as directed by the Engineer shall be considered as included in the contract prices paid for various items of work and no additional compensation will be allowed therefore.

10-25 Concrete Structures

Portland cement concrete structures shall conform to the provisions in Section 51, "Concrete Structures," of the Standard Specifications and these Special Provisions.

Replace paragraphs 2 through 4, Section 51-1.13, “Bonding,” of the Standard Specifications with the following:

Surfaces of fresh concrete at horizontal construction joints shall be thoroughly consolidated without completely removing surface irregularities. Additionally, surfaces of fresh concrete at horizontal construction joints between girder stems and decks shall be roughened to at least a 1/4"” amplitude.

Construction joint surfaces shall be cleaned of surface laitance, curing compound, and other foreign materials using abrasive blast methods before fresh concrete is places against the joint surface.

Construction joint surface shall be flushed with water and allowed to dry to a surface dry condition immediately before placing concrete.

Concrete for the reinforced concrete shown on the plans shall be structural concrete.

Shotcrete shall not be used as an alternative construction method for reinforced concrete members unless otherwise specified.

Drill and Bond Dowel (Chemical Adhesive)

Drilling and bonding dowels with chemical adhesives shall conform to the details shown on the plans and these Special Provisions.

Reinforcing steel dowels shall conform to the provisions in "Reinforcement" of these Special Provisions.

Threaded rods used as dowels shall conform to the provisions in Section 75-1.03, "Miscellaneous Bridge Metal," of the Standard Specifications. The threaded rods shall be installed in conformance with the requirements for dowels specified herein.

Chemical adhesives to be used shall be selected from the Pre-Qualified Products List at:

http://www.dot.ca.gov/hq/esc/approved_products_list/

The Contractor may propose to use a chemical adhesive not on the Pre-Qualified Products List. Information regarding product qualification can be obtained at the Transportation Laboratory.

The chemical adhesive system used shall be appropriate for the concrete temperature and installation conditions in conformance with the requirements in the Department's prequalified list.

Chemical adhesive systems shall be accompanied by a Certificate of Compliance as provided in Section 6-1.07, "Certificates of Compliance," of the Standard Specifications. The certificate shall state that the material complies in all respects to the requirements of ICBO AC58 and Caltrans Augmentation/Revisions to ICBO AC58 available at the Transportation Laboratory and at:

http://www.dot.ca.gov/hq/esc/approved_products_list/

At least 25 days prior to use, the Contractor shall submit one sample of each chemical adhesive system per lot to the Transportation Laboratory for testing. The sample shall consist of one unit of chemical adhesive, one mixing nozzle, and one retaining nut. A lot of chemical adhesives are defined as 100 units, or fraction thereof, of the same brand and product name.

Each chemical adhesive system shall be clearly and permanently marked with the manufacturer's name, model number of the system, manufacturing date, lot number, shelf life or expiration date, and current ICBO Evaluation Report (ER) number. Each carton of chemical adhesives shall contain the manufacturer's recommended installation procedures and warnings or precautions concerning the contents as may be required by State or Federal laws and regulations.

The holes shall be drilled by methods that will not shatter or damage the concrete adjacent to the holes. If reinforcement is encountered during drilling, before the specified depth is attained, the Engineer shall be notified. Unless the Engineer approves coring through the reinforcement, the hole will be rejected and a new hole, in which reinforcement is not encountered, shall be drilled adjacent to the rejected hole. The drilled holes shall be cleaned in conformance with the manufacturer's instructions and shall be dry at the time of placing the chemical adhesive. Unless otherwise specified, the diameter and depth of drilled holes shall conform to the values listed in the ICBO ER for the size of dowel or rod being installed.

The depth of the drilled hole listed in the ICBO ER shall be increased by 50 percent when epoxy coating of dowels is required.

Storage and installation procedures shall be as recommended by the manufacturer. A copy of the manufacturer's recommended installation procedure shall be provided to the Engineer at least 2 days prior to the start of work.

Immediately after inserting the dowels into the chemical adhesive, the dowels shall be supported as necessary to prevent movement during curing and shall remain undisturbed until the epoxy has cured a minimum time as specified in the Department's Pre-Qualified Products List. Dowels that are improperly bonded, as determined by the Engineer, will be rejected. Adjacent new holes shall be drilled, and new dowels shall be placed and securely bonded to the concrete. All work necessary to correct improperly bonded dowels shall be performed at the Contractor's expense.

Unless otherwise provided, dowels to be bonded into drilled holes will be measured and paid for as bar reinforcing steel (bridge).

Full compensation for drilling holes, including coring through reinforcement when approved by the Engineer, and bonding dowels with chemical adhesives shall be considered as included in the contract price paid per cubic yard for structural concrete and no separate payment will be made therefore.

Drill and Bond Dowels

Drilling and bonding dowels shall conform to the details shown on the plans, the provisions in Section 83-2.02D (1), "General," of the Standard Specifications, and these Special Provisions.

Dowels shall conform to the provisions for bar reinforcement in "Reinforcement" of these Special Provisions.

If reinforcement is encountered during drilling before the specified depth is attained, the Engineer shall be notified. Unless the Engineer approves coring through the reinforcement, the hole will be rejected and a new hole, in which reinforcement is not encountered, shall be drilled adjacent to the rejected hole to the depth shown on the plans.

Unless otherwise provided, dowels to be bonded into drilled holes will be paid for as bar reinforcing steel (bridge).

Full compensation for drilling holes, including coring through reinforcement when approved by the Engineer, and bonding dowels shall be considered as included in the contract price paid for various items of work and no separate payment will be allowed therefore.

10-26 Reinforcement

Reinforcement shall conform to the provisions in Section 52, "Reinforcement," of the Standard Specifications and these Special Provisions.

The provisions in "Welding Quality Control" of these Special Provisions do not apply to resistance butt welding.

Full compensation for furnishing all labor, materials, tools, equipment, and incidentals, and for doing all the work involved in constructing the reinforcement, as shown on the plans, as specified in the Standard Specifications and these Special Provisions, and as directed by the Engineer shall be considered as included in the contract price paid for various items of work and no additional compensation will be allowed therefore.

10-27 Clean and Paint Existing and New Concrete and Steel Surfaces

The work defined herein applies to Pump Station Building (including interior walls and floor), Toll Booths (interior and exterior), Toll Islands, Miscellaneous Concrete, Bus Shelter, portions of the canopy, and the new Pump Station.

Metal and concrete surfaces of the existing and new facilities shown on the plans shall be cleaned and painted in conformance with the provisions in Section 59, "Painting" Section 59-3, "Painting Galvanized Surfaces," and Section 91, "Paint," of the Standard Specifications and these Special Provisions.

The coating shall be applied per the manufacturer's recommendations and in conformance with the requirements of SSPC_PA 7, "Applying Thin Film Coatings to Concrete," of the SSPC: The Society of Protective Coatings."

Any damage areas shall be repaired in the same manner as the original surface preparation and paint application.

The paint to be applied to concrete surfaces shall conform to the provisions in Section 91-4.05, "Paint; Acrylic Emulsion, Exterior White and Light and Medium Tints," of the Standard Specifications.

General

The existing paint systems consist of materials listed in "Existing Highway Facilities" of these Special Provisions.

Prior to performing any painting or paint removal, the Contractor shall submit to the Engineer, in conformance with the provisions in Section 5-1.02, "Plans and Working Drawings," of the Standard Specifications, 3 copies of a separate Painting Quality Work Plan (PQWP) for each item of work for which painting or paint removal is to be performed. As a minimum, each PQWP shall include the following:

1. The name of each Contractor or subcontractor to be used.
2. One copy each of all current ASTM and "SSPC: The Society for Protective Coatings" specifications or qualification procedures applicable to the painting or paint removal to be performed. These documents shall become the permanent property of the Department.
3. A copy of the coating manufacturer's guidelines and recommendations for surface preparation, painting, drying, and curing of painted structural steel, including testing methods and maximum allowable levels for soluble salts.
4. Proposed methods and equipment to be used.
5. Proof of each of any required certifications, SSPC-QP 1 or SSPC-QP 2.
    a. In lieu of certification in conformance with the requirements in SSPC-QP 1 for this project, the Contractor may submit written documentation showing conformance with the requirements in Section 3, "General Qualification Requirements," of SSPC-QP 1.
    b. In lieu of certification in conformance with the requirements in SSPC-QP 2 for this project, the Contractor may submit written documentation showing conformance with the requirements in Sections 4.2 through 4.6 of SSPC-QP 2, Category A.
6. Proposed methods to control environmental conditions in accordance with the manufacturer's recommendations and these Special Provisions.
7. Proposed methods to protect the coating during the curing period.
8. Proposed rinse water collection plan.
9. A detailed paint repair plan for the repair of damaged areas.
10. Procedures for containing blast media and water during application of coatings and coating repair of erected steel.
11. Examples of proposed daily reports for all testing to be performed, including type of testing, location, lot size, time, weather conditions, test personnel, and results.

Prior to submitting the PQWP, a prepainting meeting between the Engineer, the Contractor, and a representative from each entity performing painting for this project shall be held to discuss the requirements for the PQWP.

The Engineer shall have 20 days to review the PQWP submittal after a complete plan has been received. No painting or paint removal shall be performed until the PQWP for that work is approved by the Engineer. Should the Engineer fail to complete the review within this time allowance and if, in the opinion of the Engineer, the Contractor's controlling operation is delayed or interfered with by reason of the delay in reviewing the PQWP, the delay will be considered a right of way delay in conformance with the provisions in Section 8-1.09, "Right of Way Delays," of the Standard Specifications.

It is understood that the Engineer's approval of the Contractor's PQWP shall not relieve the Contractor of any responsibility under the contract for the successful completion of the work in conformity with the requirements of the plans and specifications.

The Contractor shall provide enclosures to permit cleaning and painting during inclement weather. Provisions shall be made to control atmospheric conditions inside the enclosures within specified limits during cleaning and painting operations, drying to solvent insolubility, and throughout the curing period in accordance with the manufacturer's recommendations and these Special Provisions. Full compensation for providing and maintaining such enclosures shall be considered as included in the prices paid for the various contract items of work requiring paint and no additional compensation will be allowed therefore.

Fresh, potable water with a maximum chloride content of 75 ppm and a maximum sulfate content of 200 ppm shall be used for water rinsing or pressure washing operations. No continuous recycling of rinse water will be permitted. If rinse water is collected into a tank and subsequent testing determines the collected water conforms to the specified requirements, reuse may be permitted by the Engineer if no collected water is added to the tank after sample collection for determination of conformance to specified requirements.

References

ASTM International: ASTM D16 - Standard Terminology for Paint, Related Coatings, Materials, and Applications.

California Department of Health Services:

CA/DHS/EHLB/R-174 - Standard Practice for the Testing of Volatile Organic Emissions from Various Sources Using Small-Scale Environmental Chambers, including 2004 Addenda.

SSPC: The Society for Protective Coatings:

SSPC - Steel Structures Painting Manual.

Qualifications

Manufacturer: Company specializing in manufacturing products specified in this section with minimum three (3) years documented experience.

Mockup

Construct mockup panel for toll booth and other concrete wall finishes, three feet long by three feet wide, where directed by the Engineer, illustrating coating color, texture, and finish.

Remove mockup when directed by Engineer.

Environmental Requirements

Do not apply materials when surface and ambient temperatures are outside temperature ranges required by paint product manufacturer.

Do not apply exterior coatings during rain or snow when relative humidity is outside humidity ranges, or moisture content of surfaces exceed those required by paint product manufacturer.

Minimum Application Temperatures for Latex Paints: 45 degrees F for interiors; 50 degrees F for exterior; unless required otherwise by manufacturer's instructions.

Provide lighting level of 80 ft candle measured mid-height at substrate surface.

Sequencing

Sequence application to the following: Do not apply finish coats until paintable sealant is applied.

Warranty

Furnish five (5) year manufacturer warranty for paints and coatings.

Extra Materials

Supply four (4) gallons of each color; store where directed.

Label each container with color, type, texture, and locations

Paints and Coatings

Manufacturers: Paint, Ready mix - semi-gloss, and floor paint.

1. Benjamin Moore & Co.
2. PPG Architectural Finishes, Inc.
3. Sherwin-Williams Company (The).
4. Furnish materials in accordance with State of California standards and codes.

Preparation

Prepare surfaces in accordance with coating manufacturer’s instructions.

Surface Appurtenances: Remove or mask electrical plates, hardware, light fixture trim, escutcheons, and fittings prior to preparing surfaces or finishing.

Verify surfaces and substrate conditions are ready to receive Work as instructed by product manufacturer.

Examine surfaces scheduled to be finished prior to commencement of work. Report conditions capable of affecting proper application.

Surfaces: Correct defects and clean surfaces capable of affecting work of this section. Remove or repair existing coatings exhibiting surface defects.

Marks: Seal with shellac those which may bleed through surface finishes.

Aluminum Surfaces Scheduled for Paint Finish: Remove surface contamination by steam or high pressure water. Remove oxidation with acid etch and solvent washing. Apply etching primer immediately following cleaning.

Concrete Floors: Remove contamination, acid etch, and rinse floors with clear water. Verify required acid-alkali balance is achieved. Allow to dry.

Concrete and Surfaces Scheduled to Receive Paint Finish: Remove contamination, acid tech, and rinse floors with clear water. Verify required acid-alkali powder, and other foreign matter. Remove oil and grease with solution of tri-sodium phosphate; rinse well and allow to dry. Remove stains caused by weathering of corroding metals with solution of sodium metasilicate after thoroughly wetting with water. Allow to dry.

Uncoated Steel and Iron Surfaces: remove grease, mill scale, weld splatter, dirt, and rust. Where heavy coatings of scale are evident, remove by hand or power tool wire brushing or sandblasting; clean by washing with solvent. Apply treatment of phosphoric acid solution, ensuring weld joints, bolts, and nuts are similarly cleaned. Spot prime paint after repairs.

Shop Primed Steel Surfaces: Sand and scrape to remove loose primer and rust. Feather edges to make touch-up patches inconspicuous. Clean surfaces with solvent. Prime bare steel surfaces.

Metal Doors Scheduled for Painting: Prime metal door top and bottom edge surfaces.

The Contractor shall include in the Base Bid 100 sq. ft. of surface to be cleaned by sandblasting. If the Engineer directs that more than 100 sq. ft. shall be sandblasted, the Contract Price shall be adjusted accordingly.

If required by the Engineer, metal and concrete surfaces shall be blast cleaned in conformance with the provisions in Section 59-2.03, "Blast Cleaning," of the Standard Specifications. Blast cleaning shall not be performed until the surfaces are thoroughly dry.
Mineral and slag abrasives used for blast cleaning steel surfaces shall conform to the requirements for Class A, Grade 2 to 3 abrasives contained in SSPC-AB 1, "Mineral and Slag Abrasives," of the "SSPC: The Society for Protective Coatings," and shall not contain hazardous material.

The exact areas of metal surfaces shown on the plans as locations for clean and paint structural steel and spot blast clean and paint structural steel will be determined by the Engineer.

Metal surfaces indentified on the plans as locations for clean and paint structural steel shall be steam cleaned. Metal surfaces shall be steam cleaned as provided in Section 59-2.05, “Steam Cleaning,” of the Standard Specifications. The temperature of the steam produced shall be between 275°F and 375°F at the nozzle.

At the option of the Contractor, a pressure wash system with a nozzle pressure between 2,500 psi and 3,000 psi may be substituted for steam cleaning apparatus. Addition of biodegradable detergent to the pressure wash will not be required.

Gloss on the existing paint shall be removed without removing sound paint so that 60 degree specular gloss is less than 6 when measured in conformance with ASTM Designation: D 523.

Areas identified by the Engineer for blast clean and paint structural steel and areas containing rust or other foreign substances that are not removable by steam cleaning and rinsing or pressure washing, and which would hinder the bonding of new paint, shall be spot blast cleaned with abrasive blasting as required in Section 59-2.03, "Blast Cleaning," of the Standard Specifications. Blast cleaning shall not be performed until the surfaces are thoroughly dry.

Mineral and slag abrasives used for blast cleaning steel surfaces shall conform to the requirements for Class A, Grade 2 to 3 abrasives contained in SSPC-AB 1, "Mineral and Slag Abrasives," of the SSPC: The Society of Protective Coatings," and shall not contain hazardous material.

Steel abrasives used for blast cleaning steel surfaces shall comply with the requirements of SSPC-AB 3, "Ferrous Metal Abrasive," of the "SSPC: The Society for Protective Coatings." If steel abrasive is recycled through shop or field abrasive blast cleaning units, the recycled abrasive shall conform to the requirements of SSPC-AB 2, "Specification for Cleanliness of Recycled Ferrous Metallic Abrasive," of the "SSPC: The Society for Protective Coatings."

A Certificate of Compliance conforming to the provisions in Section 6-1.07, "Certificates of Compliance," of the Standard Specifications and a Material Safety Data Sheet shall be furnished prior to use for each shipment of blast cleaning material for cleaning existing steel.

Abrasive blast cleaned surfaces shall be tested by the Contractor for soluble salts using a Class A or B retrieval method as described in Technology Guide 15, "Field Methods for Retrieval and Analysis of Soluble Salts on Steel and Other Nonporous Substrates," Of the "SSPC: The Society for Protective Coatings," and cleaned so the maximum level of soluble salts does not exceed the lesser of the coating manufacturer's written recommendations or 10 micrograms per square centimeter. Areas of abrasive blast cleaned steel shall be tested at the rate of 3 tests for the first 1,000 square feet prepared per day, and one test for each additional 1,000 square feet or portion thereof, at locations selected by the Engineer. When less than 1,000 square feet of surface area is prepared in a shift, at least 2 tests shall be performed. If levels of soluble salts exceed the maximum allowed by the Special Provisions, the entire area represented by the testing will be rejected. The Contractor shall perform additional cleaning and testing of rejected areas until soluble salt levels conform to these requirements.

After concrete preparation is complete, the Contractor shall clean all surfaces to be painted by pressure rinsing as defined in Section 59-1.03, "Application," of the Standard Specifications.

Painting

Paint shall be applied to existing concrete and metal surfaces in conformance with the following provisions.

Schedule - Exterior Surfaces

Concrete:
One coat of primer sealer alkyd.
Two coats of alkyd semi-gloss.

Concrete Stairs and Bus Station Stairs:
One coat of primer sealer.
Two coats of top coat.
Aluminum oxide cast into topcoat.

Steel - Unprimed:
One coat of latex alkyd primer.
Two coats of alkyd enamel, semi-gloss.

Steel - Shop Primed, Existing:
Touch-up with zinc rich primer.
Two coats of alkyd enamel, semi-gloss.

Aluminum - Mill Finish:
One coat etching primer.
Two coats of alkyd enamel, semi-gloss.

Wood and MDO Plywood:
One coat of alkyd latex primer.
Two coats of alkyd enamel, semi-gloss.

Schedule - Interior Surfaces

Wood and MDO Plywood:
One coat of alkyd latex primer.
Two coats of alkyd enamel, semi-gloss.

Concrete Floor coating:
One coat of primer sealer.
Two coats of top coat.
Aluminum oxide cast into topcoat.

Steel - Unprimed:
One coat of alkyd latex primer.
Two coats of alkyd enamel, semi-gloss.

Steel - Primed:

Touch-up with alkyd primer.
Two coats of alkyd enamel, semi-gloss.

Aluminum - Mill Finish:
One coat etching primer.
Two coats of alkyd enamel, semi-gloss.

Scope of Paint Finish

Repaint existing steel and aluminum at existing Canopy columns, existing concrete slab at Pump Station, Toll Booths- including concrete and steel, faces of metal edged curbs and curb face at Toll Booths, Bus Shelter, Bus Shelter rails, and rails at stairs to Toll Booths. Paint Toll Booth interiors.

Paint new metal doors and frames, exposed conduit, new metal fabrications at Canopy, new walls and ceilings at Pump Station, and miscellaneous items at walls and ceilings to make a complete job.

Do not paint glass, sealants, stainless steel (unless noted otherwise), door hardware, and electrical cover plates.

Schedule - Colors

Toll Booths, Stair Walls, Bus Shelter, Canopy Columns:
Medium gray, per sample provided by Engineer.

Metal Rails:
Black: gloss finish.

Roof Hatches:
"Bay Bridge White," per sample provided by Engineer.

Stairs and Floors:
Medium gray, per sample provided by Engineer.

Materials

The paint type to be applied on metal surfaces shall be alkyd for both interior and exterior surfaces.

The paint to be applied to the concrete surfaces shall be a light-stable, alkali-resistant, acrylic latex or acrylic latex copolymer emulsion, commercially manufactured for use as an exterior concrete coating. The paint shall conform to the provisions in Section 91-4.05, "Paint: Acrylic Emulsion, Exterior White and Light and Medium Tints," of the Standard Specifications.

Application

Do not apply finishes to surfaces that are not dry. Allow applied coats to dry before next coat is applied.

Apply each coat to uniform appearance. Apply each coat of paint slightly darker than preceding coat unless specified otherwise.

Sand metal surfaces lightly between coats to achieve required finish, if required by the Engineer.

Vacuum clean surfaces of loose particles. Use tack cloth to remove dust and particles just prior to applying next coat.

Precede each specified undercoat by a stripe coat on all edges, corners, seams, crevices, interior angles, junctions of joining members, weld lines, and similar surface irregularities. This stripe coat shall be of sufficient thickness to completely hide the surface being covered and shall be followed as soon as practical by the application of the full undercoat to its specified thickness.

The first undercoat paint shall be applied in one or more applications to a dry film thickness of not less than 2 mils nor more than 3 mils.

The second undercoat paint shall be applied in one or more applications to a dry film thickness of not less than 2 mils nor more than 3 mils.

The total dry film thickness of undercoats shall be not less than 4 mils nor more than 6 mils.

After the total dry film thickness of undercoats has been applied, metal surfaces shall receive the following finish coats in the order listed:

The first finish coat paint conforming to the requirements for Bay Bridge White Paint, shall be applied in one or more applications to a dry film thickness of not less than 1.5 mils nor more than 3 mils.

The second finish coat paint conforming to the requirements for Bay Bridge White Paint, shall be applied in one or more applications to a dry film thickness of not less than 1.5 mils nor more than 3 mils.

A minimum of 12 hours drying time shall be allowed before applying the succeeding undercoat or finish coat.

The 2 undercoats and first finish coat shall be applied within 30 days of blast cleaning of existing metal surfaces.

The total dry film thickness of all applications shall be not less than 7 mils nor more than 12 mils.

1. Blast cleaned areas shall be coated with the following undercoat paint system in the order listed:
   a. The first undercoat paint conforming to the requirements for Red Primer Paint-Waterborne, Formula MWB145E, shall be applied in one or more applications to a dry film thickness of not less than 2 mils nor more than 3 mils.
   b. The second undercoat paint conforming to the requirements for Pink Primer Paint-Waterborne, Formula PWB145E, shall be applied in one or more applications to a dry film thickness of not less than 2 mils nor more than 3 mils.
   c. The total dry film thickness of undercoats shall be not less than 4 mils nor more than 6 mils.
3. After the total dry film thickness of undercoats has been applied, metal surfaces shall receive the following finish coats in the order listed:
   a. The first finish coat paint conforming to the requirements for Bay Bridge White Paint shall be applied in one or more applications to a dry film thickness of not less than 1.5 mils nor more than 3 mils.
   b. The second finish coat paint conforming to the requirements for Bay Bridge White Paint shall be applied in one or more applications to a dry film thickness of not less than 1.5 mils nor more than 3 mils.

A minimum of 12 hours drying time shall be allowed before applying the succeeding undercoat or finish coat.

The 2 undercoats and first finish coat shall be applied within 30 days of blast cleaning of existing metal surfaces.

The total dry film thickness of all applications shall be not less than 7 mils or more than 12 mils.

Test Panel

A test panel at least 3’ x 3’ in size shall be successfully completed at a location approved by the Engineer before beginning work on the architectural texture or painting concrete. The test panel shall be constructed, finished, and painted with the materials, tools, equipment, personnel, and methods to be used in constructing, finishing and painting the concrete surfaces. If ordered by the Engineer, additional test panels shall be constructed and finished until the specified finish, texture, and color are obtained, as determined by the Engineer.

The test panel approved by the Engineer shall be used as the standard for comparison in determining acceptability of painting for concrete surfaces.

Payment

Attention is directed to Section 12-13 Paint Toll Plaza Booth of these Special Provisions.

10-28 Crash Cushion - Quadguard System

Quadguard system shall be furnished and installed as shown on the plans and in conformance with these Special Provisions. The Quadguard system shall be manufactured by Energy Absorption Systems, Inc., and shall include all the items listed for Quadguard system as shown on the plans and on the manufacturer's plans.

The successful bidder can obtain Quadguard system from the following source:

1. Manufacturer: Energy Absorption Systems, Inc. 35 East Wacker Drive, Chicago, Illinois 60601, Telephone (312) 467-6750
2. Distributor:
   National Trench Safety
   7849 Stockton Blvd.
   Sacramento, California 95823
   Office: 916-387-6300
   Fax: 916-387-6400
   www.ntsafety.com

Quadguard system shown on plans to be installed at the toll plaza booths shall be placed on the existing concrete slab in accordance to the plans, as required by the manufacturer's recommendation, and directed by the Engineer.

Existing crash cushions shall be removed and disposed of outside the highway right of way in conformance with the provisions in Section 7-1.13, "Disposal of Material Outside the Highway Right of Way," of the Standard Specifications. Removal operations of crash cushions shall be concurrent with the installation of the new crash cushion, unless otherwise directed by the Engineer. Attention is directed to Section 10-22, "Temporary Crash Cushion Module" of these Special Provisions.

Prior to placement of the order for crash cushions, the Contractor shall submit to the Engineer in writing that the Contractor has familiarized himself with the site for every location where crash cushion is to be installed, and that the Contractor has reviewed with the manufacturer of Quadquard the specifics of the site and detail procedures for replacing the crash cushions. In the event that the Contractor becomes aware of site conditions which will affect the performance of the crash cushion, the Contractor shall submit in writing to the Engineer a detailed description of the conditions that will affect the performance of the crash cushions which is verified by both the Contractor and the manufacturer.

New holes drilled for the anchor system of the new Quadguard installation shall be a minimum of four inch away from the existing holes.

Removing of the existing crash cushions shall be performed without any damage to the existing concrete slab. If the Contractor's activity results in damages to the existing concrete slab, the Contractor shall be responsible for all cost related to repairing or replacing the portions of the damaged concrete slab as directed by the Engineer and as required by manufacturer's recommendations for installation of the Quadguard system.

Concrete anchorage devices used for attaching the Quadguard system to the concrete pad shall be limited to those which have been satisfactory for such application by previous testing.

The Quadguard system shall be installed in conformance with the manufacturer's recommendations.

The concrete pad, concrete backup, and concrete anchor shall conform to the provisions in Section 51, "Concrete Structures," and Section 52, "Reinforcement," of the Standard Specifications and “Portland Cement Concrete” elsewhere in these Special Provisions.

A Type R (CA) marker panel shall be attached to the front of the Quadguard system. The marker panel shall be firmly fastened to the Quadguard system with commercial quality hardware or by other methods approved by the Engineer.

The Contractor shall furnish the Engineer one copy of the manufacturer's plan and parts list for the Quadguard system installed.

The Contractor shall provide the Engineer with a Certificate of Compliance from the manufacturer in conformance with the provisions in Section 6-l.07, "Certificates of Compliance," of the Standard Specifications.

The Certificate of Compliance shall certify that the Quadguard system furnished conform to the contract plans and specifications, conform to the prequalified design and material requirements, and were manufactured in conformance with the approved quality control program.

Surplus excavated material remaining after the Quadguard system has been installed shall be disposed of outside of the highway right of way in conformance with the provisions in **GC-51 Disposal of Materials.**

Quadguard system (6 bay) will be measured by the unit as determined from actual count in place in the completed work.

The contract unit price paid for Quadguard system (6 bay) shall include full compensation for removing the existing crash cushions, furnishing all labor, materials (including Quadguard system, anchor bolts, nuts, washers, and marker panels), tools, equipment, and incidentals, and for doing all the work involved in furnishing and installing the Quadguard system, complete in place, including structure excavation, structure backfill, disposal of surplus material, bar reinforcing steel, connections to the concrete barrier, concrete pad, concrete backup, anchor slab, and transition plate, as required by the manufacturer, as shown on the plans, as specified in these Special Provisions, and as directed by the Engineer.

10-29 Furnish Sign

Signs shall be fabricated and furnished in accordance with details shown on the plans, the Traffic Sign Specifications, and these Special Provisions.

Traffic Sign Specifications for California sign codes are available for review at:

http://www.dot.ca.gov/hq/traffops/signtech/signdel/specs.htm

Traffic Sign Specifications for signs referenced with Federal MUTCD sign codes can be found in Standard Highway Signs Book, administered by the Federal Highway Administration, which is available for review at:

http://mutcd.fhwa.dot.gov/ser-shs_millennium.htm

Information on cross-referencing California sign codes with the Federal MUTCD sign codes is available at:

http://www.dot.ca.gov/hq/traffops/signtech/signdel/specs.htm

Temporary or permanent signs shall be free from blemishes that may affect the serviceability and detract from the general sign color and appearance when viewing during daytime and nighttime from a distance of 25 feet. The face of each finished sign shall be uniform, flat, smooth, and free of defects, scratches, wrinkles, gel, hard spots, streaks, extrusion marks, and air bubbles. The front, back, and edges of the sign panels shall be free of router chatter marks, burns, sharp edges, loose rivets, delaminated skins, excessive adhesive over spray and aluminum marks.

Quality Control for Signs

The requirements of "Quality Control for Signs" in this section shall not apply to construction area signs.

No later than 14 days before sign fabrication, the Contractor shall submit a written copy of the quality control plan for signs to the Engineer for review. The Engineer will have 10 days to review the quality control plan. Sign fabrication shall not begin until the Engineer approves the Contractor's quality control plan in writing. The Contractor shall submit to the Engineer at least 3 copies of the approved quality control plan. The quality control plan shall include, but not be limited to the following requirements:

A. Identification of the party responsible for quality control of signs,
B. Basis of acceptance for incoming raw materials at the fabrication facility,
C. Type, method and frequency of quality control testing at the fabrication facility,
D. List (by manufacturer and product name) of process colors, protective overlay film, retroreflective sheeting and black non-reflective film,
E. Recommended cleaning procedure for each product, and
F. Method of packaging, transport and storage for signs.

No legend shall be installed at the project site. Legend shall include letters, numerals, tildes, bars, arrows, route shields, symbols, logos, borders, artwork, and miscellaneous characters. The style, font, size, and spacing of the legend shall conform to the Standard Alphabets published in the FHWA Standard Highway Signs Book. The legend shall be oriented

in the same direction in accordance with the manufacturer's orientation marks found on the retroreflective sheeting.

On multiple panel signs, legend shall be placed across joints without affecting the size, shape, spacing, and appearance of the legend. Background and legend shall be wrapped around interior edges of formed panel signs as shown on plans to prevent delamination.

The following notation shall be placed on the lower right side of the back of each sign where the notation will not be blocked by the sign post or frame:

A. PROPERTY OF STATE OF CALIFORNIA,
B. Name of the sign manufacturer,
C. Month and year of fabrication,
D. Type of retroreflective sheeting, and
E. Manufacturer's identification and lot number of retroreflective sheeting.

The above notation shall be applied directly to the aluminum sign panels in 1/4-inch upper case letters and numerals by die-stamp and applied by similar method to the fiberglass reinforced plastic signs. Painting, screening, or engraving the notation will not be allowed. The notation shall be applied without damaging the finish of the sign.

Signs with a protective overlay film shall be marked with a dot of 3/8 inch in diameter. The dot placed on white border shall be black, while the dot placed on black border shall be white. The dot shall be placed on the lower border of the sign before application of the protective overlay film and shall not be placed over the legend and bolt holes. The application method and exact location of the dot shall be determined by the manufacturer of the signs.

For sign panels that have a minor dimension of 48 inches or less, no splice will be allowed in the retroreflective sheet except for the splice produced during the manufacturing of the retroreflective sheeting. For sign panels that have a minor dimension greater than 48 inches, only one horizontal splice will be allowed in the retroreflective sheeting.

Unless specified by the manufacturer of the retroreflective sheeting, splices in retroreflective sheeting shall overlap by a minimum of one inch. Splices shall not be placed within 2 inches from edges of the panels. Except at the horizontal borders, the splices shall overlap in the direction from top to bottom of the sign to prevent moisture penetration. The retroreflective sheeting at the overlap shall not exhibit a color difference under the incident and reflected light.

Signs exhibiting a significant color difference between daytime and nighttime shall be replaced immediately.

Repairing sign panels will not be allowed except when approved by the Engineer.

The Engineer will inspect signs at the Contractor's facility and delivery location, and in accordance with Section 6, "Control of Materials," of the Standard Specifications. The Engineer will inspect signs for damage and defects before and after installation.

Regardless of kind, size, type, or whether delivered by the Contractor or by a common carrier, signs shall be protected by thorough wrapping, tarping, or other methods to ensure that signs are not damaged by weather conditions and during transit. Signs shall be dry during transit and shipped on palettes, in crates, or tier racks. Padding and protective materials shall be placed between signs as appropriate. Finished sign panels shall be transported and stored by method that protects the face of signs from damage. The Contractor shall replace wet, damaged, and defective signs.

Signs shall be stored in dry environment at all times. Signs shall not rest directly on the ground or become wet during storage. Signs, whether stored indoor or outdoor, shall be free standing. In areas of high heat and humidity signs shall be stored in enclosed climate-controlled trailers or containers. Signs shall be stored indoor if duration of the storage will exceed 30 days.

Screen processed signs shall be protected, transported and stored as recommended by the manufacturer of the retroreflective sheeting.

When requested, the Contractor shall provide the Engineer test samples of signs and materials used at various stages of production. Sign samples shall be 12" x 12" in size with applied background, letter or numeral, and border strip.

The Contractor shall assume the costs and responsibilities resulting from the use of patented materials, equipment, devices, and processes for the Contractor's work.

Sheet Aluminum

Alloy and temper designations for sheet aluminum shall be in accordance with ASTM Designation: B 209.

The Contractor shall furnish the Engineer a Certificate of Compliance in conformance with Section 6-1.07, "Certificates of Compliance," of the Standard Specifications for the sheet aluminum.

Sheet aluminum shall be pretreated in accordance to ASTM Designation: B 449. Surface of the sheet aluminum shall be cleaned, deoxidized, and coated with a light and tightly adherent chromate conversion coating free of powdery residue. The conversion coating shall be Class 2 with a weight between 10 milligrams per square foot and 35 milligrams per square foot, and an average weight of 25 milligrams per square foot. Following the cleaning and coating process, the sheet aluminum shall be protected from exposure to grease, oils, dust, and contaminants.

Sheet aluminum shall be free of buckles, warps, dents, cockles, burrs, and defects resulting from fabrication.

Base plate for standard route marker shall be die cut.

Retroreflective Sheeting

The Contractor shall furnish retroreflective sheeting for sign background and legend in conformance with ASTM Designation: D 4956 and "Prequalified and Tested Signing and Delineation Materials" of these Special Provisions.

Retroreflective sheeting shall be applied to sign panels as recommended by the retroreflective sheeting manufacturer without stretching, tearing, and damage.

Class 1, 3, or 4 adhesive backing shall be used for Type II, III, IV, VII, VIII, and IX retroreflective sheeting. Class 2 adhesive backing may also be used for Type II retroreflective sheeting. The adhesive backing shall be pressure sensitive and fungus resistant.

When the color of the retroreflective sheeting determined from instrumental testing is in dispute, the Engineer's visual test will govern.

Process Color and Film

The Contractor shall furnish and apply screened process color, non-reflective opaque black film, and protective overlay film of the type, kind, and product that are approved by the manufacturer of the retroreflective sheeting.

The Contractor shall furnish the Engineer a Certificate of Compliance in accordance to Section 6-1.07, "Certificates of Compliance," of the Standard Specifications for the screened process color, non-reflective opaque black film, and protective overlay film.

The surface of the screened process color shall be flat and smooth. When the screened process colors determined from the instrumental testing in accordance to ASTM Designation: D 4956 are in dispute, the Engineer's visual test will govern.

The Contractor shall provide patterns, layouts, and set-ups necessary for the screened process.

The Contractor may use green, red, blue, and brown reverse-screened process colors for background and non-reflective opaque black film or black screened process color for legend. The coefficient of retroreflection for reverse-screened process colors on white retroreflective sheeting shall not be less than 70 percent of the coefficient of retroreflection specified in ASTM Designation: D 4956.

The screened process colors and non-reflective opaque black film shall have the same outdoor weatherability as that of the retroreflective sheeting.

After curing, screened process colors shall withstand removal when tested by applying 3M Company Scotch Brand Cellophane Tape No. 600 or equivalent tape over the color and removing with one quick motion at 90° angle.

Measurement and Payment

The contract unit price paid per Install Roadside Sign Panel on Existing Post specified in the Engineer's estimate shall include full compensation for furnishing all labor, materials, tools, equipment, and incidentals, and for doing all the work involved in fabricating and furnishing the signs, including removable sign panel frame and fastening hardware, as shown on the plans, as specified in the Standard Specifications and these Special Provisions, and as directed by the Engineer. No additional compensation for furnishing and installing protective overlay on signs shall be made therefore.

10-30 Install Roadside Sign Panel on Existing Post

Roadside sign panels shall be installed on existing posts at the locations shown on the plans or where designated by the Engineer and in conformance with the provisions in Section 56-2.04, "Sign Panel Installation," of the Standard Specifications and these Special Provisions.

The Contractor shall furnish roadside sign panels in conformance with the provisions in "Furnish Sign" of these Special Provisions.

Existing sign panels, as shown on the plans, shall be salvaged or removed and disposed of as provided in Section 15, "Existing Highway Facilities," of the Standard Specifications.

Installing roadside sign panels on existing posts will be paid for by the unit as determined from actual count in place.

The contract unit price paid for install roadside sign panel on existing post shall include full compensation for furnishing all labor, materials, tools, equipment, and incidentals, and for doing all the work involved in installing roadside sign panels on existing posts (including drilling holes in existing posts, removing, salvaging, and disposing of existing sign panels), complete in place, as shown on the plans, as specified in the Standard Specifications and these Special Provisions, and as directed by the Engineer.

10-31 Reset Roadside Sign

Existing roadside signs, where shown on the plans to be reset, shall be removed and reset.

Each roadside sign shall be reset on the same day that the sign is removed.

The contract unit price paid for Reset Roadside Sign includes full compensation for furnishing all labor, materials, tools, equipment, and incidentals, and for doing all the work involved in resetting roadside sign, complete in place, including installing new post if required, as shown on the plans, as specified in the Standard Specifications and these Special Provisions, and as directed by the Engineer.

10-32 Remove Stairway No. 7

Scope

The work includes the removal of the Stairway No. 7 as shown on the plans and as specified in these Special Provisions, located at the westbound I-80, immediately west of the Toll Plaza, between lanes 17 and 18.

The removal of Stairway No. 7 shall include all demolition, construction of concrete structural work and reinforcements, structure backfill, pavement and accessories necessary for the complete removal of Stairway No. 7 construction as shown on the plans, as specified elsewhere in these Special Provisions and as directed by the Engineer.

Attention is directed to Section 19-3.06, "Structure Backfill", of the Standard Specifications, Section 10-23, "Concrete Structures", 10-24, "Reinforcement", and elsewhere in these Special Provisions dictating the work involved in the demolition of the Stairway No. 7 and all work shown on the plans to remove Stairway No. 7.

Payment

Full compensation for furnishing all labor, materials, tools, equipment and incidentals, accessories and for doing all the work involved in Remove Stairway No. 7, including removal and disposal of concrete waste, demolition work, falsework, scaffolding, shown on the plans and as specified in the Standard Specifications and these Special Provisions, and as directed by the Engineer shall be considered as included in the contract prices paid for the following items of work:

- Remove concrete
- Structure Backfill (Retaining Wall)
- Bar Reinforcement Steel (Tunnel Wall & Roof)
- Structure Concrete (Tunnel Wall & Roof)
- Asphalt Membrane and Waterproofing
- Hot Mix Asphalt (Type A)

and no additional compensation will be allowed therefore.

SECTION 12. ARCHITECTURAL SPECIFICATIONS

12-1.1 Toll Plaza Recladding

General

Clearing and grubbing shall conform to the provisions in Section 16, "Clearing and Grubbing," of the Standard Specifications

Scope

This work includes the construction of Recladding of the Bay Bridge Toll Plaza Canopy, as shown on the plans and as specified in these Special Provisions, located at the westbound I-80.

The Toll Plaza Recladding shall include all architectural and structural work and accessories necessary for the complete Recladding construction as shown on the plans, as specified elsewhere in these Special Provisions and as directed by the Engineer.

Attention is directed to elsewhere in these Special Provisions dictating the work involved in constructing Toll Plaza Recladding.

Cooperation

State forces will be working within the project limits during this contract. Plan work to minimize interference with State forces". Attention is directed to Section 10-8, Cooperation of these Special Provisions.

Attention is directed to the provisions in Section SC-17 "CONTRACTOR COOPERATION AND COORDINATION, GC-39 "COOPERATION/COORDINATION AND WORK BY OTHERS", 10-7 "COOPERATION" of these Special Provisions.

Comply with all security policies of the State facility.

Submit requests for approval to the Engineer before interrupting any services for the purpose of making or breaking a connection. Include in the request the proposed time period necessary to complete the work. Allow the Engineer 5 days to review each request.

Submittals

Items to be submitted to the Engineer must be approved as stated under SC-51, v, Section GC-43, submittal for Shop Drawings, product data and samples, SC-5, Beginning of Work, Time of Completion, and Liquidated Damages, and SC-6, Contract Data Requirement.

The Engineer may request submittals for materials or products where submittals have not been specified in these Special Provisions, or may request that you include additional information in specified submittals, as necessary to determine the quality or acceptability of such materials or products.

Submit the following items within 30 Calendar days of contract approval:

1. Working drawings
2. Material lists
3. Product and descriptive data
4. Samples
5. Other submittals

Submit at least 5 sets of each item. Two sets will be returned either approved for use or returned for correction and resubmittal.

Submit the Schedule of Values within 20 days of contract approval. Submit at least 2 sets. Each item submitted must include a descriptive title, the name of the project, district, county, contract number, and must reference the applicable portion of the contract documents that it pertains to. Plans and detailed drawings must be not larger than 24" x 36."

The material lists must include the name of manufacturer, catalog number, size, capacity, finish, all pertinent ratings, and identification symbols used on the plans and in these Special Provisions for each unit. Deliver submittals to the Engineer.

In addition the Contractor may not select a cladding system that imposes a weight that is greater than 10% of the existing canopy weight. The Contractor shall submit the existing and modified canopy weight calculations for review and approval by the Engineer prior to developing shop drawings. The existing and new canopy weight shall include all permanent structural and architectural components above the top of column.

Allow 14 days for approval or return for correction of each submittal or resubmittal. Should the Engineer fail to complete the review within the time specified and Engineer determines that your controlling operation is delayed or interfered with by delay in review, an extension of time commensurate with the delay in completion of the your work will be granted under Section 8-1.09, "Right of Way Delays," of the Standard Specifications.

Remove unapproved samples and samples not incorporated in the work from State property.

Furnish 3 copies of the following items to the Engineer at the job site:

1. Parts lists and service instructions packaged with or accompanying the equipment
2. Operating and maintenance instructions
3. Manufacturer's warranties
4. Qualification data

Updated Schedule

Submit an updated schedule and meet with the Engineer to review contract progress on or before the 1st day of each month, beginning one month after the baseline schedule is accepted. Allow 5 days for the review.

Payment

Toll Plaza Recladding will be paid for on the basis of a lump sum price. The contract lump sum price paid for Toll Plaza Recladding includes full compensation for furnishing all labor, materials, tools, equipment, and incidentals, accessories, and for doing all the work involved in performing the building work, including falsework, scaffolding, removal of the existing cladding, all required temporary construction, complete in place, as shown on the plans, as specified in the Standard Specifications and these Special Provisions, and as directed by the Engineer.

Full compensation for any incidental materials and labor, not shown on the plans or specified that are necessary to complete the building work, are considered as included in the contract lump sum price paid for Toll Plaza Recladding and no additional compensation will be allowed therefore.

12-1.2 Toll Plaza Lighting

Scope

This work includes the electrical work at Toll Plaza canopy at the Bay Bridge Toll Plaza, as shown on the plans, as specified elsewhere in these Special Provisions, and as directed by the Engineer. Attention is directed to Section 13 **Signal, Lighting, and Electrical Systems,** of these Special Provisions.

Cooperation

State forces will be working within the project limits during this contract. Plan work to minimize interference with State forces. Attention is directed to Section 10-7, Cooperation of these Special Provisions.

Payment

Toll Plaza - Lighting will be paid for on the basis of a lump sum price. The contract lump sum price paid for Toll Plaza - Lighting includes full compensation for furnishing all labor, materials, tools, equipment, and incidentals, including providing samples for the Engineer's review and approval, and for doing all the work involved in performing the work, complete in place, as shown on the plans, as specified in the Standard Specifications and these Special Provisions, and as directed by the Engineer.

Full compensation for any incidental materials and labor, not shown on the plans or specified that are necessary to complete the electrical and lighting work at Toll Plaza canopy, is considered as included in the contract lump sum price paid for Toll Plaza - Lighting and no additional compensation will be allowed therefore.

12-1.3 Paint Toll Plaza Booth

Scope

This work includes the painting of Toll Plaza canopy columns, bus shelter, rails, Pump Station building (inside walls and floor), Toll Plaza booths, and concrete pillars at the Bay Bridge Toll Plaza, as shown on the plans, as specified elsewhere in these Special Provisions, and as directed by the Engineer. Attention is directed to Section 10-25, **"Clean and Paint Existing and New Concrete and Steel Surfaces"** of these Special Provisions.

Cooperation

State forces will be working within the project limits during this contract. Plan work to minimize interference with State forces. Attention is directed to Section 10-7, Cooperation of these Special Provisions.

Payment

Cleaning and painting of existing Toll Plaza facilities with steel and concrete surface will be paid for on the basis of a lump sum price. The contract lump sum price paid for Paint Toll Plaza Booths includes full compensation for furnishing all labor, materials, tools, equipment, and incidentals, including providing samples for the Engineer's review and approval, and for doing all the work involved in cleaning and painting surfaces of existing metal and concrete, including testing for soluble salts, performing the painting, complete in place, as shown on the plans, as specified in the Standard Specifications and these Special Provisions, and as directed by the Engineer.

Full compensation for any incidental materials and labor, not shown on the plans or specified that are necessary to complete the painting of the Toll Plaza Canopy columns, rails, Pump Station building (inside walls and floor), bus shelter, Toll Plaza booths and concrete pillars at the toll Plaza booths, is considered as included in the contract lump sum price paid for Paint Toll Plaza Booths and no additional compensation will be allowed therefore.

12-1.4 Remove Existing Pump Station Building

Scope

This work shall consist of removing the existing pump station building, including removal of concrete curb beneath the building walls, in accordance with the details shown on the plans and these Special Provisions.

Preparation

The limits of removal shall be located and identified. Items to be removed and the interface of items to be removed and items to remain intact shall be identified and marked. Prior to removing concrete or curb, a saw cut approximately one inch deep shall be made along the limits of removal on all faces that will be visible in the completed work.

Removal

Removal shall be to the limits shown on the plans. Removal shall be done carefully to minimize damage to the portions to remain. Remaining portions that are damaged by the Contractor's operation shall be restored to original condition at the Contractor's expense.

Assemblies to be salvaged which require dismantling for removal shall be matchmarked before dismantling. Existing apparatuses, devices, or accessories which would be functionally impaired by new construction or remodeling shall be moved, brought out to new surfaces, or provided with new access covers, as necessary to restore apparatuses, devices, or accessories to their original usefulness. Piping and conduits to be abandoned shall be capped or plugged.

Surfaces that are exposed to view at the limits of removal work shall be patched, bumps shall be removed and depressions filled, and the surface shall be finished to match the existing surrounding surfaces. Depressions in concrete less than one inch deep shall be deepened to one inch minimum depth before filling with cement mortar.

Anchor bolts and reinforcement shall be removed at least one inch below the surrounding surfaces, and the resulting hole shall be patched with cement mortar. Existing reinforcement that is to be incorporated into the new work shall be protected from damage and thoroughly cleaned before being embedded in new concrete.

Disposal

Materials that are to be removed shall become the property of the Contractor and shall be disposed of outside the highway right of way in accordance with the requirements in Section 7-1.13, "Disposal of Material Outside of the Highway Right of Way," of the Standard Specifications.

Salvage

Materials or equipment shown on the plans to be salvaged shall remain the property of the State and shall be removed, cleaned and stockpiled at a location at the project site designated by the Engineer.

Payment

Remove Existing Pump Station Building will be paid for on the basis of a lump sum price. The contract lump sum price paid for Remove Existing Pump Station Building includes

full compensation for furnishing all labor, materials, tools, equipment, and incidentals, accessories, and for doing all the work involved in demolition work, including falsework, scaffolding, removal of the existing cladding and roof, all required temporary construction, disposing outside of the right of way, complete in place, as shown on the plans, as specified in the Standard Specifications and these Special Provisions, and as directed by the Engineer.

Full compensation for any incidental materials and labor, not shown on the plans or specified that are necessary to complete the demolition work, are considered as included in the contract lump sum price paid for Remove Existing Pump Station Building and no additional compensation will be allowed therefore.

12-1.5 Pump Station Building

Scope

This work includes the construction of a new steel building, as shown on the plans and as specified in these Special Provisions, over the exiting pump station concrete slab, located at the median of I-80 in the vicinity of the new Toll Plaza Administration building.

The pump station building shall include all equipment and accessories necessary for the complete installation and operation of the building as shown on the plans, as directed elsewhere in these Special Provisions and as directed by the Engineer.

Attention is directed to elsewhere in these Special Provisions dictating the work involved in constructing the pump station building.

Cooperation

State forces will be working within the project limits during this contract. Plan work to minimize interference with State forces. Attention is directed to Section 10-7, Cooperation of these Special Provisions.

Attention is directed to the provisions in Section SC-17 “CONTRACTOR COOPERATION AND COORDINATION, GC-39 “COOPERATION/COORDINATION AND WORK BY OTHERS”, 10-7 “COOPERATION” these Special Provisions.

Comply with all security policies of the State facility.

Submit requests for approval to the Engineer before interrupting any services for the purpose of making or breaking a connection. Include in the request the proposed time period necessary to complete the work. Allow the Engineer 5 days to review each request.

Submittals

Items to be submitted to the Engineer must be approved as stated under SC-51, v, Section GC-43, submittal for Shop Drawings, product data and samples, SC-5, Beginning of Work, Time of Completion, and Liquidated Damages, and SC-6, Contract Data Requirement.

The Engineer may request submittals for materials or products where submittals have not been specified in these Special Provisions, or may request that you include additional information in specified submittals, as necessary to determine the quality or acceptability of such materials or products.

Submit the following items within 30 Calendar days of contract approval:

1. Working drawings
2. Material lists
3. Product and descriptive data
4. Samples
5. Other submittals

Submit at least 5 sets of each item. Two sets will be returned either approved for use or returned for correction and resubmittal.

Submit the Schedule of Values within 20 days of contract approval. Submit at least 2 sets.

Each item submitted must include a descriptive title, the name of the project, district, county, contract number, and must reference the applicable portion of the contract documents that it pertains to. Plans and detailed drawings must be not larger than 24" x 36."

The material lists must include the name of manufacturer, catalog number, size, capacity, finish, all pertinent ratings, and identification symbols used on the plans and in these Special Provisions for each unit. Deliver submittals to the Engineer.

Allow 20 days for approval or return for correction of each submittal or resubmittal. Should the Engineer fail to complete the review within the time specified and Engineer determines that your controlling operation is delayed or interfered with by delay in review, an extension of time commensurate with the delay in completion of the your work will be granted under Section 8-1.09, "Right of Way Delays," of the Standard Specifications.

Remove unapproved samples and samples not incorporated in the work from State property.

Furnish 3 copies of the following items to the Engineer at the job site:

1. Parts lists and service instructions packaged with or accompanying the equipment
2. Operating and maintenance instructions
3. Manufacturer's warranties
4. Qualification data

Updated Schedule

Submit an updated schedule and meet with the Engineer to review contract progress on or before the 1st day of each month, beginning one month after the baseline schedule is accepted. Allow 5 days for the review.

Payment

Pump Station Building will be paid for on the basis of a lump sum price. The contract lump sum price paid for Pump Station Building includes full compensation for furnishing all labor, materials, tools, equipment, and incidentals, and for doing all the work involved in performing the building work, including constructing all concrete work, reinforcement bars, all drill and bond doweling work complete in place, as shown on the plans, as specified in the Standard Specifications and these Special Provisions, and as directed by the Engineer.

Full compensation for any incidental materials and labor, not shown on the plans or specified that are necessary to complete the building work, is considered as included in the contract lump sum price paid for Pump Station Building work and no additional compensation will be allowed therefore.

12-1.6 Pump Station Building Electrical

Scope

This work includes the electrical work at pump station building, as shown on the plans, as specified elsewhere in these Special Provisions, and as directed by the Engineer. Attention is directed to Section 13 "**Signal, Lighting, and Electrical Systems,"** of these Special Provisions.

Cooperation

State forces will be working within the project limits during this contract. Plan work to minimize interference with State forces. Attention is directed to Section 10-7, Cooperation of these Special Provisions.

Payment

Pump Station Building - Electrical will be paid for on the basis of a lump sum price. The contract lump sum price paid for Pump Station Building - Electrical includes full compensation for furnishing all labor, materials, tools, equipment, and incidentals, including providing samples for the Engineer's review and approval, and for doing all the work involved in performing the work, complete in place, as shown on the plans, as specified in the Standard Specifications and these Special Provisions, and as directed by the Engineer.

Full compensation for any incidental materials and labor, not shown on the plans or specified that are necessary to complete the electrical work at pump station building, is

considered as included in the contract lump sum price paid for Pump Station Building - Electrical and no additional compensation will be allowed therefore.

12-2.1 Selective Structure Demolition

General

Summary

This Section includes the following:

1. Removal of existing metal cladding panels at the exterior of, including, but not limited to, the existing cladding of the Canopy above the level of the existing columns.
2. Demolition and removal of selected portions of building or structure.
3. Demolition and removal of selected site elements at stair to pedestrian tunnel from road level.
4. Salvage of existing items to be reused or recycled, including, but not limited to, existing traffic lights on Canopy, EMS signs, and CMS signs.

Definitions

Remove: Detach items from existing construction and legally dispose of them off-site, unless indicated to be removed and salvaged or removed and reinstalled.

Remove and Salvage: Detach items from existing construction and deliver them to Owner ready for reuse.

Recycle: Divert demolition waste from landfills and incinerators. Recovery of demolition waste for subsequent processing in preparation for reuse.

Remove and Reinstall: Detach items from existing construction, prepare them for reuse, and reinstall them where indicated.

Existing to Remain: Existing items of construction that are not to be removed and that are not otherwise indicated to be removed, removed and salvaged, or removed and reinstalled.

Submittals

Schedule of Selective Demolition Activities: Indicate the following:

1. Detailed sequence of selective demolition and removal work, with starting and ending dates for each activity. Ensure BATA's operations are uninterrupted 24 hours a day, 7 days a week.
2. Interruption of utility services, only if requested and if approved in advance in writing by the Engineer. Indicate how long utility services will be interrupted.
3. Coordination for shutoff, capping, and continuation of utility services.
4. Coordination of BATA's continuing occupancy of portions of existing building and of BATA's partial occupancy of pedestrian tunnel, utility tunnel, toll booths, and walkways.

5. Means of protection for items to remain and items in path of waste removal from building.

Inventory: After selective demolition is complete, submit a list of items that have been removed and salvaged.

Predemolition Photographs or Videotapes: Show existing conditions of adjoining construction and site improvements, including finish surfaces, that might be misconstrued as damage caused by selective demolition operations.

Quality Assurance

Demolition Firm Qualifications: An experienced firm that has specialized in composite panel work similar in material and extent to that indicated for this Project.

Standards: Comply with ANSI A10.6 and NFPA 241.

Pre-demolition Conference: Conduct conference at Project site to review methods and procedures related to selective demolition including, but not limited to, the following:

1. Inspect and discuss condition of construction to be selectively demolished.
2. Review structural load limitations of existing structure.
3. Review and finalize selective demolition schedule and verify availability of materials, demolition personnel, equipment, and facilities needed to make progress and avoid delays.
4. Review requirements of work performed by other trades that rely on substrates exposed by selective demolition operations.
5. Review areas where existing construction is to remain and requires protection.

Project Conditions

Owner will occupy portions of building immediately adjacent to selective demolition area. Conduct selective demolition so BATA's operations will not be disrupted.

Conditions existing at time of inspection for bidding purpose will be maintained by BATA as far as practical.

Notify Engineer of discrepancies between existing conditions and Drawings before proceeding with selective demolition.

Storage or sale of removed items or materials on-site is not permitted.

Utility Service: Maintain existing utilities indicated to remain in service and protect them against damage during selective demolition operations.

1. Maintain fire-protection facilities in service during selective demolition operations.

Repair

Existing Structures: Remove, replace, patch, and repair materials and surfaces cut or damaged during selective demolition, by methods and with materials to restore existing structure to original conditions.

Products (Not Used)

Part 3 – Execution

Examination

Verify that utilities have been disconnected and capped.

Survey existing conditions and correlate with requirements indicated to determine extent of selective demolition required.

Inventory and record the condition of items to be removed and reinstalled and items to be removed and salvaged.

When unanticipated mechanical, electrical, or structural elements that conflict with intended function or design are encountered, investigate and measure the nature and extent of conflict. Promptly submit a written report to Engineer.

Survey of Existing Conditions: Record existing conditions by use of preconstruction photographs, preconstruction videotapes and templates.

Perform surveys as the Work progresses to detect hazards resulting from selective demolition activities.

Utility Services and Mechanical/Electrical Systems

Existing Services/Systems: Maintain services/systems indicated to remain and protect them against damage during selective demolition operations.

Service/System Requirements: Locate, identify, disconnect, and seal or cap off indicated utility services and mechanical/electrical systems serving areas to be selectively demolished.

1. Contractor to request and coordinate with BATA regarding the schedule and arrange to shut off indicated utilities with utility companies.

If services/systems are required to be removed, relocated, or abandoned, before proceeding with selective demolition provide temporary services/systems that bypass area of selective demolition and that maintain continuity of services/systems to other parts of building.

Preparation

Site Access and Temporary Controls: Conduct selective demolition and debris-removal operations to ensure minimum interference with roads, streets, walks, walkways, and other adjacent occupied and used facilities.

Temporary Facilities: Provide temporary barricades and other protection required to prevent injury to people and damage to adjacent buildings and facilities to remain

1. Provide protection to ensure safe passage of people around selective demolition area and to and from occupied portions of building.
2. Provide temporary weather protection, during interval between selective demolition of existing construction on exterior surfaces and new construction, to prevent water leakage and damage to structure and interior areas.
3. Protect walls, ceilings, floors, and other existing finish work that are to remain or that are exposed during selective demolition operations.
4. Cover and protect furniture, furnishings, and equipment that have not been removed.
5. Submit to the Engineer for review and acceptance the methodology of weather protection of the Canopy during the process of removing the existing cladding and installation of the new cladding.

Temporary Shoring: Provide and maintain shoring, bracing, and structural supports as required to preserve stability and prevent movement, settlement, or collapse of construction and finishes to remain, and to prevent unexpected or uncontrolled movement or collapse of construction being demolished.

1. Strengthen or add new supports when required during progress of selective demolition.

Selective Demolition, General

General: Demolish and remove existing construction only to the extent required by new construction and as indicated. Use methods required to complete the Work within limitations of governing regulations and as follows:

1. Proceed with selective demolition systematically, from higher to lower level. Complete selective demolition operations above each floor or tier before disturbing supporting members on the next lower level.
2. Neatly cut openings and holes plumb, square, and true to dimensions required. Use cutting methods least likely to damage construction to remain or adjoining construction. Use hand tools or small power tools designed for sawing or grinding, not hammering and chopping, to minimize disturbance of adjacent surfaces. Temporarily cover openings to remain.
3. Cut or drill from the exposed or finished side into concealed surfaces to avoid marring existing finished surfaces.
4. Do not use cutting torches until work area is cleared of flammable materials. At concealed spaces, such as duct and pipe interiors, verify condition and contents of hidden space before starting flame-cutting operations. Maintain fire watch and portable fire-suppression devices during flame-cutting operations.
5. Maintain adequate ventilation when using cutting torches. Obtain Engineer's approval for each instance of use of cutting torches.
6. Remove structural framing members and lower to ground by method approved by Engineer, suitable to avoid free fall and to prevent ground impact or dust generation.

7. Locate selective demolition equipment and remove debris and materials so as not to impose excessive loads on supporting walls, floors, or framing.
8. Dispose of demolished items and materials promptly

Reuse of Building Elements: Project has been designed to result in end-of-Project rates for reuse of building elements as follows. Do not demolish building elements beyond what is indicated on Drawings without Engineer's approval.

Existing Items to Remain: Protect construction items indicated to remain against damage and soiling during selective demolition include EMS signs. When permitted by Engineer, items may be removed to a suitable, protected storage location during selective demolition and cleaned and reinstalled in their original locations after selective demolition operations are complete.

Remove and Reinstalled Times:

1. Clean and repair items to functional condition adequate for intended reuse. Paint equipment to match new equipment.
2. Patch or crate items after cleaning and repairing. Identify contents of containers.
3. Protect items from damage during transport and storage.
4. Reinstall CMS and Traffic Lights in locations indicated. Provide connections, supports, and miscellaneous materials necessary to make item functional for use indicated.

Selective Demolition Procedures for Specific Materials

Concrete: Demolish in small sections. Cut concrete to a depth of at least 3/4 inch at junctures with construction to remain, using power-driven saw. Dislodge concrete from reinforcement at perimeter of areas being demolished, cut reinforcement, and then remove remainder of concrete indicated for selective demolition. Neatly trim openings to dimensions indicated.

Concrete: Demolish in sections. Cut concrete full depth at junctures with construction to remain and at regular intervals, using power-driven saw, then remove concrete between saw cuts.

Concrete Slabs-on-Grade: Saw-cut perimeter of area to be demolished, then break up and remove.

Roofing: Remove no more existing roofing than can be covered in one day by new roofing and so that Canopy interior remains watertight and weathertight.

1. Remove existing roof membrane, flashings, copings, and roof accessories as required for installation of parapets and other items.
2. Remove existing roofing system down to substrate.

Disposal of Demolished Materials

General: Except for items or materials indicated to be recycled, reused, salvaged, reinstalled, or otherwise indicated to remain Owner's property, remove demolished materials from Project site and legally dispose of them in an EPA-approved landfill.

1. Do not allow demolished materials to accumulate on-site.
2. Remove and transport debris in a manner that will prevent spillage on adjacent surfaces and areas.
3. Remove debris from elevated portions of building by chute, hoist, or other device that will convey debris to grade level in a controlled descent as approved by Engineer.

Disposal: Transport demolished materials off BATA's property and legally dispose of them.

Cleaning

Clean adjacent structures and improvements of dust, dirt, and debris caused by selective demolition operations. Return adjacent areas to condition existing before selective demolition operations began.

Selective Demolition Schedule

Existing Items to Be Removed and Reinstalled (refer to drawings and additional specifications regarding detailed information for these systems):

1. Canopy Equipment and Systems as designated by BATA, including but not limited to:
   a. EMS signs, CMS signs, and traffic lights.

12-2.2 Cast-In-Place Concrete

Summary

Scope: This work shall consist of constructing cast-in-place concrete facilities in accordance with the details shown on the plans and these Special Provisions.

Concrete:

Except for concrete designated by compressive strength, concrete shall conform to the provisions in Section 51, "Concrete Structures," of the Standard Specifications, and these Special Provisions. Concrete designated by compressive strength shall conform to the provisions in Section 51, "Concrete Structures," of the Standard Specifications, and these Special Provisions.

Reinforcement: Reinforcement shall conform to the provisions in Section 52, "Reinforcement," of the Standard Specifications, and these Special Provisions.

Definitions

All concrete shall be normal weight with type II, low alkali portal cement and ultimate compressive strength at 28 days of 4,000 spi.

Submittals

Product Data:
Manufacturer's descriptive data, installation and use recommendations for admixtures, expansion joint material, vapor barrier, curing compound, hardener, and sealer shall be submitted for approval.

Descriptive data shall be delivered to the Engineer at the jobsite.

Concrete Mix Designs: Copies of concrete mix designs shall be submitted when required.

Certificates of Compliance: Certificates of compliance shall be submitted when required as informational submittals.

Part 2 – Products

Concrete Mixes

The amount of cementitious material used per cubic yard of concrete for each building element shall conform to the following:

Concrete (Structural Work - Footings):

630 min (Pounds/CY) Cementitious Material Content

Form Materials

Forms for Exposed Finish Concrete:

Forms for exposed surfaces shall be plywood, metal or other panel type materials. Plywood shall be not less than 5/8 inch thick and without scars, dents, and delaminations. Forms shall be furnished in largest practical pieces to minimize number of joints.

Plywood shall conform to the requirements of U. S. Product Standard PS-1 for Exterior B-B (Concrete Form) Class I.

Forms for edges of slabs shall be nominal 2-inch solid stock lumber, plywood, or metal forms.

Forms for Unexposed Finish Concrete: Forms for unexposed finish concrete surfaces shall be plywood, lumber, metal or other acceptable material.

Forms for Cylindrical Columns or Supports: Forms for cylindrical columns shall be metal, fiberglass reinforced plastic, paper or fiber tubes. Paper or fiber tubes shall be constructed of laminated plies using water-resistant adhesive with wax-impregnated exterior for protection against weather or moisture.

Form Ties: Form ties shall be factory fabricated, removable or snapoff metal ties for use as necessary to prevent spreading of forms during concrete placement.

Form Oil: Form oil shall be commercial quality form oil which will permit the ready release of the forms and will not discolor the concrete.

Reinforcement

Bar Reinforcement: Bar reinforcement shall conform to Standard Specifications, Section 52, "Reinforcement."

Bar Supports: Bar supports for reinforcement shall be precast mortar blocks or ferrous metal chairs, spacers, metal hangers, supporting wires, and other approved devices of sufficient strength to resist crushing under applied loads.

Related Materials

Anchor Bolts and Anchor Rods, Nuts and Washers:
Headed and Unheaded Anchor Bolts and Anchor Rods: Comply with ASTM F 1554. Use Grade 36 unless
a higher grade is shown on the plans.

Nuts: Comply with ASTM A 563.
Washers:

1. Washers bearing on wood surfaces must be commercial quality.
2. Washers bearing on steel surfaces must comply with ASTM F 436, Type 1.
3. Plate washers must comply with ASTM A 36/A 36M.

Exposed anchor bolts and anchor rods, nuts and washers must be hot-dipped galvanized.

Expansion Joint Material: Expansion joint material shall be commercial quality asphalt impregnated pressed fiber sheets, ½-inch minimum thickness.

Bond Breaker: Bond breaker shall be Type I asphalt saturated organic felt or such other material approved by the Engineer.

Curing Compound: Curing compound shall be a non-pigmented curing compound with fugitive dye conforming to the requirements of ASTM C 309, Type 1-D, Class A.

Part 3 - Execution

Preparation

Existing Concrete Construction:

Where fresh concrete joins existing or previously placed concrete or masonry, the contact surfaces of the existing or previously placed material shall be roughened, cleaned, flushed with water and allowed to dry to a surface dry condition immediately prior to placing the fresh concrete. The roughened surface shall be no smoother than a wood trowelled surface. Cleaning of the contact surfaces shall remove laitance, curing compounds, debris, dirt and such other substances or materials which would prevent bonding of the fresh concrete.

Abrasive blast methods shall be used to clean horizontal construction joints to the extent that clean aggregate is exposed.

Exposed reinforcing steel located at the contact surfaces which is to be encased in the fresh concrete shall be cleaned to remove any substance or material that would prevent bonding of the fresh concrete.

Forms:

Forms shall be mortar tight, true to the dimensions, lines, and grades shown on the plans, securely fastened and supported, and of adequate rigidity to prevent distortion during placing of concrete.

Forms for exposed surfaces shall be constructed with triangular fillets not less than 3/4" x 3/4" attached so as to prevent mortar runs and to produce smooth straight chamfers at all sharp edges of the concrete.

Form fasteners shall be removable without chipping, spalling, heating or otherwise damaging the concrete surface. Form ties shall be removed to a depth of at least one inch below the surface of the concrete.

The inside surfaces of forms shall be cleaned of all dirt, mortar and foreign material. Forms shall be thoroughly coated with form oil prior to use.

Forms shall not be stripped until at least 40 hours after placing concrete, except soffit forms and supports shall not be released or removed until at least 10 days after placing concrete.

12-2.3 Structural Steel Framing

General

Summary

Section Includes:

1. Structural steel.
2. Architecturally Exposed Structural Steel (AESS).
3. Grout.

Definitions

Structural Steel: Elements of structural-steel frame, as classified by AISC 303, "Code of Standard Practice for Steel Buildings and Bridges."

Seismic-Load-Resisting System: The Seismic Load Resisting System includes the elements of structural-steel frames that are part of the braced frames, including columns, beams, and braces and their connections, as well as the following:

1. All beams, columns, braces, and their connections, including anchor bolts, for all braced frames.
2. All beams denoted with the symbol for axial or moment connections on the drawings.
3. All steel components of the exterior walkway canopy enclosure.

Protected Zone: Structural members or portions of structural members indicated as "Protected Zone" on Drawings. Connections of structural and nonstructural elements to protected zones are limited.

Demand Critical Welds: Those welds, the failure of which would result in significant degradation of the strength and stiffness of the Seismic-Load-Resisting System. Demand critical welds in the structure are limited to the following locations:

1. Welds of columns-to-base plates that are part of either end of a braced frame.

Fabrication Model: A electronic model created by the steel fabricator used to detail the steel elements and connection

Submittals

Product Data: For each type of product indicated.

LEED Submittal:

1. Product Data for Credit MR 4.1 and Credit MR 4.2: For products having recycled content, documentation indicating percentages by weight of postconsumer and preconsumer recycled content.
   a. Include statement indicating both weights and costs for each product having recycled content.

2. Product Data for Credit MR 5.1 & 5.2. For products including regional materials, documentation indicating percent by weight of each regional material in the product and source point of origin and manufacture.
   a. Include statement indicating costs for each product having regional materials.
3. Product Data for Credit EQ 4.2. For each field-applied primer, paint and coating within the weather barrier of the building, submit printed statement of VOC content and material safety data sheets.

Shop Drawings: Show fabrication of structural-steel components, and in accordance with AISC 341 and 341s1.

1. Each structural steel submittal shall include relevant erection drawings for the pieces being submitted for review. If submitted electronically, the shop drawings should be in PDF format and have bookmarks for each of the pages in the submittal. If the submittal includes a Fabrication Model, pieces being submitted should be marked for easy identification in the model.
2. Erection drawings shall not be a direct reproduction of Engineer's framing plans
3. Include details of cuts, connections, splices, camber, holes, and other pertinent data.
4. Include embedment drawings.
5. Indicate welds by standard AWS symbols, distinguishing between shop and field welds, and show size, length, and type of each weld. Show backing bars that are to be removed.
6. Indicate type, size, and length of bolts, distinguishing between shop and field bolts. Identify pretensioned and slip-critical high-strength bolted connections.
7. Identify members and connections of the seismic-load-resisting system.
8. Indicate locations and dimensions of protected zones.
9. Identify demand critical welds.
10. Structural steel connections have been indicated on the drawings. Where the configuration of an individual connection differs from the intended connection shown in the contract documents, the shop drawings shall indicate that the connection has been adjusted and flag the detail for review by the Engineer.
11. The shop drawings shall indicate the sequence of shop and field assembly and erection, welding sequences and procedures.

Welding Procedure Specifications (WPSs), Procedure Qualification Records (PQRs), and Project-specific Welding Quality Control Procedures (WQCP): Provide according to AWS D1.1/D1.1M, "Structural Welding Code - Steel," and AISC 341 and AISC 341s1, for each welded joint whether prequalified or qualified by testing, including the following:

1. Power source (constant current or constant voltage).
2. Electrode manufacturer and trade name, for demand critical welds.
3. Fabricator's and Erector's WQCP for this project, and for demand critical welds.

Qualification Data: For qualified Installer, fabricator, professional Engineer, and testing agency.

Welding certificates.

Paint Compatibility Certificates: From manufacturers of topcoats applied over shop primers, certifying that shop primers are compatible with topcoats.

Mill test reports for structural steel, including chemical and physical properties.

Product Test Reports: For the following:

1. Bolts, nuts, and washers including mechanical properties and chemical analysis.
2. Direct-tension indicators.
3. Tension-control, high-strength bolt-nut-washer assemblies.

4. Shear stud connectors.
5. Shop primers.
6. Nonshrink grout.

Source quality-control reports.

Quality Assurance

Fabricator Qualifications: A qualified fabricator that participates in the AISC Quality Certification Program and is designated an AISC-Certified Plant, Category STD.

Welding Qualifications: Qualify procedures and personnel according to AW D1.1/D1.1M, "Structural Welding Code - Steel."

1. Welders and welding operators performing work on bottom-flange, and demand-critical welds shall pass the supplemental welder qualification testing, as required by AWS D1.8. FCAW-S and FCAW-G shall be considered separate processes for welding personnel qualification.

Comply with applicable provisions of the following specifications and documents:

1. AISC 303.
2. All welding procedures, quality control procedures, AISC 341-05 and AISC 341s1-05, “Seismic Provisions for Structural Steel Buildings, including Supplement No. 1”.
3. AISC 360.
4. RCSC's "Specification for Structural Joints Using ASTM A 325 or A 490 Bolts."

Preinstallation Conference: Conduct conference at Project site.

Fabricator and Installer Qualifications: In accordance with Division 1 specifications, and Section 014219.

Delivery, Storage, And Handling

Store materials to permit easy access for inspection and identification. Keep steel members off ground and spaced by using pallets, dunnage, or other supports and spacers. Protect steel members and packaged materials from corrosion and deterioration.

1. Do not store materials on structure in a manner that might cause distortion, damage, or overload to members or supporting structures. Repair or replace damaged materials or structures as directed.

Store fasteners in a protected place in sealed containers with manufacturer's labels intact.

1. Fasteners may be repackaged provided Owner's testing and inspecting agency observes repackaging and seals containers.
2. Clean and relubricate bolts and nuts that become dry or rusty before use.
3. Comply with manufacturers' written recommendations for cleaning and lubricating ASTM F 1852 fasteners and for retesting fasteners after lubrication.

Coordination

Coordinate selection of shop primers with topcoats to be applied over them. Comply with paint and coating manufacturers' recommendations to ensure that shop primers and topcoats are compatible with one another.

Coordinate installation of anchorage items to be embedded in or attached to other construction without delaying the Work. Provide setting diagrams, sheet metal templates, instructions, and directions for installation.

Products

Structural-Steel Materials

Recycled Content of Steel Products: Provide products with an average recycled content of steel products so postconsumer recycled content plus one-half of preconsumer recycled content is not less than 70 percent.

Charpy V-Notch (CVN) Toughness for Steel Products and Welds: Mill certification showing compliance with required CVN toughness shall be provided for:

1. Shapes included in ASTM A 6/A 6M with flanges thicker than 1-1/2 inches. CVN testing shall be in accordance with Supplementary Requirements S30 of A6/A6M. The frequency of testing, the test temperature, and the absorbed energy shall follow those in Supplementary Requirement S30.
2. Welded built-up members with plates thicker than 2 inches. CVN testing shall be in accordance with Supplementary Requirements S5 of A6/A6M. The frequency of testing shall be "P" according to ASTM A673/A673M, the absorbed energy shall have a minimum average value of 20 ft-lbs at a testing temperature of 70 degrees Fahrenheit.
3. All Welding Electrodes and filler metals used in connections of the Seismic Load Resisting System (as earlier defined) shall satisfy the minimum CVN toughness requirement of 20 ft-lbs at zero degrees Fahrenheit.
4. All Welding electrodes and filler metal in moment connections, column baseplate connections, demand-critical welds, and welded column splices shall satisfy the minimum CVN toughness requirement of 20 ft-lbs at -20 degrees Fahrenheit.

W-Shapes: ASTM A 992/A 992M.

Channels, Angles, M, S-Shapes: ASTM A 36.

Plate and Bar: ASTM A 36/A 36M unless noted otherwise, or ASTM A 572/A 572M, Grade 50 where indicated.

Cold-Formed Hollow Structural Sections: ASTM A 500, Grade B, structural tubing.

Steel Pipe: ASTM A 53/A 53M, Type E or S, Grade B.

1. Weight Class: as noted on drawings.
2. Finish: Black.

Steel Castings: ASTM A 216/A 216M, Grade WCB with supplementary requirement S11. I. Steel Forgings: ASTM A 668/A 668M.

Welding Electrodes: Comply with AWS requirements.

Bolts, Connectors, And Anchors

High-Strength Bolts, Nuts, and Washers: ASTM A 325, Type 1, heavy-hex steel structural bolts; ASTM A 563, Grade C, heavy-hex carbon-steel nuts; and ASTM F 436, Type 1, hardened carbon-steel washers; all with plain finish.

1. Direct-Tension Indicators: ASTM F 959, Type 325, compressible-washer type with plain finish.

Zinc-Coated High-Strength Bolts, Nuts, and Washers: ASTM A 325, Type 1, heavy-hex steel structural bolts; ASTM A 563, Grade DH heavy-hex carbon-steel nuts; and ASTM F 436, Type 1, hardened carbon-steel washers.

1. Finish: Hot-dip or mechanically deposited zinc coating.
2. Direct-Tension Indicators: ASTM F 959, Type 325, compressible-washer type with mechanically deposited zinc coating, baked epoxy-coated finish.

Tension-Control, High-Strength Bolt-Nut-Washer Assemblies: ASTM F 1852, Type 1, hex head assemblies consisting of steel structural bolts with splined ends, heavy-hex carbon-steel nuts, and hardened carbon-steel washers.

1. Finish: Plain.

Shear Connectors: ASTM A 108, Grades 1015 through 1020, headed-stud type, cold-finished carbon steel; AWS D1.1/D1.1M, Type B.

Unheaded Anchor Rods: ASTM F 1554, Grade 36, or ASTM F 1554, Grade 55, weldable, as indicated on drawings.

1. Configuration: Straight.
2. Nuts: ASTM A 563 heavy-hex carbon steel.
3. Plate Washers: ASTM A 36/A 36M carbon steel.
4. Washers: ASTM F 436, Type 1, hardened carbon steel.
5. Finish: Plain.
6. Anchor Bolts in exterior environments shall be hot-dipped galvanized.
7. Provide leveling nuts unless detailed otherwise.

Headed Anchor Rods: ASTM F 1554, Grade 36, or ASTM F 1554, Grade 55, weldable, straight as indicated on drawings.

1. Nuts: ASTM A 563 heavy-hex carbon steel.
2. Plate Washers: ASTM A 36/A 36M carbon steel.
3. Washers: ASTM F 436, Type 1, hardened carbon steel.
4. Finish: Plain.
5. Provide leveling nuts unless detailed otherwise.

Threaded Rods: ASTM A 36/A 36M.

1. Nuts: ASTM A 563 heavy-hex carbon steel.
2. Washers: ASTM F 436, Type 1, hardened or ASTM A 36/A 36M carbon steel.
3. Finish: Plain.

Primer

General:

1. For all exterior structural steel and all architecturally exposed structural steel, provide high end prep and primer in accordance with Division 09 painting Sections and Division 09 Section "High-Performance Coatings."
2. For all other interior steel not exposed to view in the completed work, provide manufacturer's standard primer according to one of the following.
3. Field applied Primers shall conform to the VOC limits and requirements of Section 01 "Sustainable Design Requirements" for Low Emitting Materials.
4. All field-applied primers, repair paints, and all other coatings shall have a maximum VOC content of 250 g/L.

Primer: SSPC-Paint 25, Type I or Type II, zinc oxide, alkyd, linseed oil primer.

Primer: SSPC-Paint 25 BCS, Type I or Type II, zinc oxide, alkyd, linseed oil primer.

Primer: SSPC-Paint 23, latex primer.

Primer: Fabricator's standard lead- and chromate-free, nonasphaltic, rust-inhibiting primer complying with MPI#79 and compatible with topcoat.

Galvanizing Repair Paint: ASTM A 780**.**

Grout

Nonmetallic, Shrinkage-Resistant Grout: ASTM C 1107, factory-packaged, nonmetallic aggregate grout, noncorrosive and nonstaining, mixed with water to consistency suitable for application and a 30-minute working time.

Fabrication

Prior to fabrication, the Contractor shall verify all dimensions given on the Drawings and shall make such field measurements as are necessary to lay out the work properly and assure proper fit and proper elevations. Where structural steel interfaces with existing construction those steel members shall be fabricated to fit to the existing conditions.

Architecturally Exposed Structural Steel: Where steel is indicated as AESS, comply with fabrication requirements, including tolerance limits, of AISC's "Code of Standard Practice for Steel Buildings and Bridges" for structural steel identified as architecturally exposed structural steel.

1. Fabricate with exposed surfaces smooth, square, and free of surface blemishes including pitting, rust, scale, seam marks, roller marks, rolled trade names, and roughness.
2. Remove blemishes by filling or grinding or by welding and grinding, before cleaning, treating, and shop priming.
3. Grind all welds smooth.
4. Architecturally Exposed Structural Steel components includes the following elements and their connections:
   a. Columns supporting the entrance canopy.
   b. Header beams in the entrance canopy structure exposed to view in the final Work.

Structural Steel: Fabricate and assemble in shop to greatest extent possible. Fabricate according to AISC's "Code of Standard Practice for Steel Buildings and Bridges" and AISC 360.

1. Camber structural-steel members where indicated.
2. Fabricate beams with rolling camber up.
3. Identify high-strength structural steel according to ASTM A 6/A 6M and maintain markings until structural steel has been erected.
4. Mark and match-mark materials for field assembly.
5. Complete structural-steel assemblies, including welding of units, before starting shop-priming operations.

Thermal Cutting: Perform thermal cutting by machine to greatest extent possible.

1. Plane thermally cut edges to be welded to comply with requirements in AWS D1.1/D1.1M.

Bolt Holes: Cut, drill, or punch standard bolt holes perpendicular to metal surfaces.

Finishing: Accurately finish ends of columns and other members transmitting bearing loads.

Cleaning: Clean and prepare steel surfaces that are to remain unpainted according to SSPC- SP 3, "Power Tool Cleaning."

Shear Connectors: Prepare steel surfaces as recommended by manufacturer of shear connectors. Use automatic end welding of headed-stud shear connectors according to AWS D1.1/D1.1M and manufacturer's written instructions.

Steel Wall-Opening Framing: Select true and straight members for fabricating steel wall- opening framing to be attached to structural steel. Straighten as required to provide uniform, square, and true members in completed wall framing.

Welded Door Frames: Build up welded door frames attached to structural steel. Weld exposed joints continuously and grind smooth. Plug-weld fixed steel bar stops to frames. Secure removable stops to frames with countersunk machine screws, uniformly spaced not more than 10 inches o.c. unless otherwise indicated.

Holes: Provide holes required for securing other work to structural steel and for other work to pass through steel framing members.

1. Cut, drill, or punch holes perpendicular to steel surfaces.
2. Baseplate Holes: Cut, drill, mechanically thermal cut, or punch holes perpendicular to steel surfaces. Provide grout holes in baseplates having least dimension greater than 24 inches. Grout holes shall be as close to the center as practical and a minimum of 2 inches in diameter
3. Weld threaded nuts to framing and other specialty items indicated to receive other work.

Shop Connections

High-Strength Bolts: Shop install high-strength bolts according to RCSC's "Specification for Structural Joints Using ASTM A 325 or A 490 Bolts" for type of bolt and type of joint specified.

1. Connection Type: Snug tightened, unless indicated as slip-critical, direct-tension, or tensioned shear/bearing connections. Note: All bolts in moment connections and braced frames shall be slip-critical.

Weld Connections: Comply with AWS D1.1/D1.1M and AWS D1.8/D1.8M for tolerances, appearances, welding procedure specifications, weld quality, and methods used in correcting welding work.

1. Assemble and weld built-up sections by methods that will maintain true alignment of axes without exceeding tolerances in AISC 303 for mill material.

Shop Priming

Shop prime steel surfaces except the following:

1. Surfaces embedded in concrete or mortar. Extend priming of partially embedded members to a depth of 2 inches.
2. Surfaces to be field welded.
3. Surfaces to be high-strength bolted with slip-critical connections.
4. Surfaces to receive sprayed fire-resistive materials (applied fireproofing).
5. Galvanized surfaces.
6. Top flanges of beams to receive field installed shear connectors for composite construction.

Surface Preparation: Clean surfaces to be painted. Remove loose rust and mill scale and spatter, slag, or flux deposits. Prepare surfaces according to the following specifications and standards:

1. SSPC-SP 6/NACE No. 3, "Commercial Blast Cleaning."

Priming: Immediately after surface preparation, apply primer according to manufacturer's written instructions and at rate recommended by SSPC to provide a minimum dry film thickness of 1.5 mils. Use priming methods that result in full coverage of joints, corners, edges, and exposed surfaces.

1. Stripe paint corners, crevices, bolts, welds, and sharp edges.

2. Apply two coats of shop paint to surfaces that are inaccessible after assembly or erection. Change color of second coat to distinguish it from first.

D. Painting: Prepare steel and apply a one-coat, nonasphaltic primer complying with SSPC- PS Guide 7.00, "Painting System Guide 7.00: Guide for Selecting One-Coat Shop Painting Systems," to provide a dry film thickness of not less than 1.5 mils.

Galvanizing

Hot-Dip Galvanized Finish: Apply zinc coating by the hot-dip process to structural steel according to ASTM A 123/A 123M.

1. Fill vent and drain holes that will be exposed in the finished Work unless they will function as weep holes, by plugging with zinc solder and filing off smooth.
2. Galvanize all structural steel exposed to weather, lintels, shelf angles and welded door frames attached to structural-steel frame and located in exterior walls.

Source Quality Control

Testing Agency: Owner may choose to engage a qualified independent testing and inspecting agency to provide additional shop inspections and quality assurance above and beyond the Contractor's quality control plans.

Correct deficiencies in Work that test reports and inspections indicate does not comply with the Contract Documents.

Execution

Examination

Verify, with steel Erector present, elevations of concrete- and masonry-bearing surfaces and locations of anchor rods, bearing plates, and other embedments for compliance with requirements.

1. Prepare a certified survey of bearing surfaces, anchor rods, bearing plates, and other embedments showing dimensions, locations, angles, and elevations.

Proceed with installation only after unsatisfactory conditions have been corrected.

Preparation

Provide temporary shores, guys, braces, and other supports during erection to keep structural steel secure, plumb, and in alignment against temporary construction loads and loads equal in intensity to design loads. Remove temporary supports when permanent structural steel, connections, and bracing are in place unless otherwise indicated.

1. Do not remove temporary shoring supporting composite deck construction until cast-in-place concrete has attained its design compressive strength.

Shipping, Handling And Storing Materials

In handling and shipping of the steel work, every care shall be taken to avoid bending, scraping or overstressing the pieces. All pieces bent or otherwise injured will be rejected.

The loading, transporting and unloading of structural material shall be so conducted that the metal will be kept clean. Materials to be stored shall be placed above the ground on platforms, skids or other supports and shall be kept free of dirt, grease and other foreign material and properly drained and protected from corrosion. Girders and beams shall be placed upright and shored. Long members such as columns and chords, shall be supported on skids placed near enough together to prevent damage from deflection.

Members weighing more than 3 tons shall have the weight marked thereon.

Erection

Set structural steel accurately in locations and to elevations indicated and according to AISC 303 and AISC 360.

Architecturally Exposed Structural Steel: Where steel is indicated as AESS, comply with erection requirements, including tolerance limits, of AISC's "Code of Standard Practice for Steel Buildings and Bridges" for structural steel identified as architecturally exposed structural steel.

1. Grind all welds smooth.
2. Remove blemishes by filling or grinding or by welding and grinding, before cleaning, treating, priming and final painting.

Base Bearing and Leveling Plates: Clean concrete- and masonry-bearing surfaces of bond- reducing materials, and roughen surfaces prior to setting plates. Clean bottom surface of plates. Coordinate grouting with Division 3 requirements.

1. Set plates for structural members on wedges, shims, or setting nuts as required.
2. Weld plate washers to top of baseplate.
3. Pre-Tension anchor rods after supported members have been positioned and plumbed. Do not remove wedges or shims but, if protruding, cut off flush with edge of plate before packing with grout.
4. Promptly pack grout solidly between bearing surfaces and plates so no voids remain. Neatly finish exposed surfaces; protect grout and allow to cure. Comply with manufacturer's written installation instructions for shrinkage-resistant grouts.
   a. Comply with manufacturer's instructions for proprietary grout materials.

Maintain erection tolerances of structural steel within AISC's "Code of Standard Practice for Steel Buildings and Bridges."

Align and adjust various members that form part of complete frame or structure before permanently fastening. Before assembly, clean bearing surfaces and other surfaces that will be in permanent contact with members. Perform necessary adjustments to compensate for discrepancies in elevations and alignment.

1. Level and plumb individual members of structure.

2. Establish required leveling and plumbing measurements on mean operating temperature of the structure. Make allowances for difference between temperature at time of erection and mean temperature when structure is completed and in service.

   Splice members only where indicated, and as approved on shop drawings.

   Do not use thermal cutting during erection.

Do not enlarge unfair holes in members by burning or using drift pins. Ream holes that must be enlarged to admit bolts.

Shear Connectors: Prepare steel surfaces as recommended by manufacturer of shear connectors. Use automatic end welding of headed-stud shear connectors according to AWS D1.1/D1.1M and manufacturer's written instructions.

Field Connections

High-Strength Bolts: Install high-strength bolts according to RCSC's "Specification for Structural Joints Using ASTM A 325 or A 490 Bolts" for type of bolt and type of joint specified.

1. Joint Type: Snug tightened, except where noted on drawings as slip-critical.
2. Manual torque wrenches shall have either a dial gage or a digital readout. Any electric, pneumatic or hydraulic calibrated wrench used to tension fasteners shall have an adequate adjustable control unit that can be set to positively shut off at the desired torque.
3. Wrenches used for snugging tension control bolts in a connection prior to final tensioning shall not apply torsion to the splinned end of the bolt.
4. When direct tension indicators are used, one direct tension indicator shall be installed under each bolt head with the direct tension indicator protrusions contacting the bearing surface of the bolt head. To tension the bolt, the bolt head shall be held stationary and the nut turned. The manufacturer’s installation procedure shall be followed. Each bolt shall be tensioned in at least 2 tightening stages until at least 50 percent of the gaps on each direct tension indicator are greater than zero and less than 0.005-inch. Complete crushing of all direct tension indicator protrusions (0 gaps) on any given direct tension indicator will be cause for rejection.
5. The same head orientation shall be used within any one high-strength bolted connection.

Weld Connections: Comply with AWS D1.1/D1.1M and AWS D1.8/D1.8M for tolerances, appearances, welding procedure specifications, weld quality, and methods used in correcting welding work.

1. Comply with AISC 303 and AISC 360 for bearing, alignment, adequacy of temporary connections, and removal of paint on surfaces adjacent to field welds.
2. Remove backing bars or runoff tabs, back gouge, and grind steel smooth.
3. Assemble and weld built-up sections by methods that will maintain true alignment of axes without exceeding tolerances in AISC's "Code of Standard Practice for Steel Buildings and Bridges" for mill material.
4. Field welds are only allowed where so specified in the contract documents.

Misfits at Bolted Connections: Where misfits in erection bolting are encountered, the Engineer shall be immediately notified, and the Steel Fabricator/Erector shall propose an acceptable method of repair that is acceptable to the Engineer. Mispunched or misdrilled holes shall not be corrected by welding, unless approved by the Engineer in writing. The Engineer can modify the proposed method of repair in order to make the repair acceptable:

1. Ream holes that must be enlarged to admit bolts and use oversized bolts (for holes unfair by less than or equal to 3/16-inch).
2. Plug weld misaligned holes and redrill holes to admit standard size bolts (for holes unfair by greater than 3/16-inch).
3. Drill additional holes in the connection, conforming with AISC Standards for bolt spacing, and end and edge distances and add additional bolts.
4. Reject the unfair member and fabricate a new member to ensure proper fit.
5. All cost shall be borne by Contractor, Fabricator, and Erector for work to correct members and connections.
6. Missized or misaligned holes in members shall not be enlarged by burning or by the use of drift pins.

Misfits at Welded Connections: Where misfits in welded connections are encountered, the Engineer shall be immediately notified, and the Steel Fabricator/Erector shall propose an acceptable method of repair that is acceptable to the Engineer. The Engineer can modify the proposed method of repair in order to make the repair acceptable.

Gas Cutting: Do not use gas cutting torches in field for correcting fabrication errors in primary structural framing.

1. Cutting will be permitted only on secondary members which are not under stress, as acceptable to Engineer. Finish gas-cut sections equal to a sheared appearance when permitted.

Field Quality Control

Testing Agency: Owner will engage a qualified independent testing and inspecting agency to inspect field welds and high-strength bolted connections.

1. Owner may engage a qualified independent testing and inspecting agency to review testing services and site construction at the owner's discretion. If deficiencies are found, retesting shall be performed by Contractor's testing agency at Contractor's expense.
2. Correct deficiencies in or remove and replace structural steel that inspections and test reports indicate do not comply with specified requirements. Additional testing, at Contractor's expense, will be performed to determine compliance of corrected Work with specified requirements.

Correct deficiencies in Work that test reports and inspections indicate does not comply with the Contract Documents.

Repairs and Protection

Galvanized Surfaces: Clean areas where galvanizing is damaged or missing and repair galvanizing to comply with ASTM A 780.

1. Galvanizing Repair Paint: High zinc dust content paint for regalvanizing welds in galvanized steel containing no less than 94 percent zinc dust by weight, and complying with DOD-P-21035 or SSPC-Paint-20.
2. Apply two coats. Each coat shall have a minimum dry film thickness of 2 mills and at total thickness not less than 4 mills shall be provided. Apply by brush

Touchup Painting: Immediately after erection, clean exposed areas where primer is damaged or missing and paint with the same material as used for shop painting to comply with SSPC-PA 1 for touching up shop-painted surfaces.

1. Clean and prepare surfaces by SSPC-SP 2 hand-tool cleaning or SSPC-SP 3 power-tool cleaning.

Touchup Painting: Cleaning and touchup painting are specified in Division 09 painting Sections.

12-2.4 Steel Decking

General

Summary

Submittals

Product Data: For each type of deck, accessory, and product indicated. B. LEED Submittals:

1. Product Data for Credit MR 4.1 and Credit MR 4.2: For products having recycled content, documentation indicating percentages by weight of postconsumer and preconsumer recycled content.
   a. Include statement indicating costs for each product having recycled content.
2. Product Data for Credit MR 5.1 & 5.2. For products including regional materials, documentation indicating percent by weight of each regional material in the product and source point of origin and manufacture.
   a. Include statement indicating costs for each product having regional materials.
3. Product Data for Credit EQ 4.2: For each field-applied primer, paint and coating within the weather barrier, submit printed statements of VOC content and material safety data sheets.

Shop Drawings: Show layout and types of deck panels, anchorage details, reinforcing channels, pans, cut deck openings, special jointing, accessories, and attachments to other construction.

Product Certificates: For each type of steel deck, signed by product manufacturer.

Welding certificates.

Field quality-control test and inspection reports.

Product Test Reports: Based on evaluation of comprehensive tests performed by a qualified testing agency, indicating that each of the following complies with requirements:
1. Power-actuated mechanical fasteners.
2. Side-lap fastening systems.

Research/Evaluation Reports: For steel deck.

Installer Qualification data.

Quality Assurance

Testing Agency Qualifications: An independent agency qualified according to ASTM E 329 for testing indicated.

Welding: Qualify procedures and personnel according to AWS D1.3, "Structural Welding Code - Sheet Steel."

Fire-Test-Response Characteristics: Where indicated, provide steel deck units identical to those tested for fire resistance per ASTM E 119 by a testing and inspecting agency acceptable to authorities having jurisdiction.
1. Fire-Resistance Ratings: Indicated by design designations of applicable testing and inspecting agency.
2. Steel deck units shall be identified with appropriate markings of applicable testing and inspecting agency.

AISI Specifications: Comply with calculated structural characteristics of steel deck according to AISI's "North American Specification for the Design of Cold-Formed Steel Structural Members."

FMG Listing: Provide steel roof deck evaluated by FMG and listed in its "Approval Guide, Building Materials" for Class 1 fire rating and Class 1-90 windstorm ratings.

Recycled Content of Steel Products: Provide products with an average recycled content of steel products so postconsumer recycled content plus one-half of preconsumer recycled content is not less than 70 percent.

Installer Qualifications: In accordance with Division 1 sections, and Section 014219.

Delivery, Storage, And Handling

Protect steel deck from corrosion, deformation, and other damage during delivery, storage, and handling.

Stack steel deck on platforms or pallets and slope to provide drainage. Protect with a waterproof covering and ventilate to avoid condensation.

Products

Manufacturers

Available Manufacturers: Subject to compliance with requirements, manufacturers offering products that may be incorporated into the Work include, but are not limited to, the following:

Manufacturers: Subject to compliance with requirements, provide products by one of the following:

1. Steel Deck:
    a. ASC Profiles, Inc.
    b. Canam Steel Corp.; the Canam Manac Group.
    c. Consolidated Systems, Inc.
    d. DACS, Inc.
    e. D-Mac Industries Inc.
    f. Epic Metals Corporation.
    g. Marlyn Steel Decks, Inc.
    h. New Millennium Building Systems, LLC.
    i. Nucor Corp.; Vulcraft Division.
    j. Roof Deck, Inc.
    k. United Steel Deck, Inc.
    l. Valley Joist; Division of EBSCO Industries, Inc.
    m. Verco Manufacturing Co.
    n. Wheeling Corrugating Company; Div. of Wheeling-Pittsburgh Steel Corporation.

Roof Deck

Steel Roof Deck: Fabricate panels, without top-flange stiffening grooves, to comply with "SDI Specifications and Commentary for Steel Roof Deck," in SDI Publication No. 30, and with the following:

1. Galvanized and Shop-Primed Steel Sheet: ASTM A 653/A 653M, Structural Steel (SS), Grade 33 or better, G60 zinc coating; cleaned, pretreated, and primed with manufacturer's standard baked-on, rust-inhibitive primer on the bottom surface.
   a. Color: White underside.
2. Deck Profile: As indicated.
3. Profile Depth: As indicated.
4. Design Uncoated-Steel Thickness: As indicated.
5. Span Condition: Triple span or more.
6. Side Laps: Overlapped or interlocking seam at Contractor's option.

Composite Floor Deck

Composite Steel Floor Deck: Fabricate panels, with integrally embossed or raised pattern ribs and interlocking side laps, to comply with "SDI Specifications and Commentary for Composite Steel Floor Deck," in SDI Publication No. 30, with the minimum section properties indicated, and with the following:

1. Galvanized and Shop-Primed Steel Sheet: ASTM A 653/A 653M, Structural Steel (SS), Grade 33, G60 zinc coating; with unpainted top surface and cleaned and pretreated bottom surface primed with manufacturer's standard baked-on, rust-inhibitive primer.
   a. Color: white underside.
2. Profile Depth: As indicated.
3. Design Uncoated-Steel Thickness: As indicated.
4. Span Condition: Triple span or more.

Accessories

General: Provide manufacturer's standard accessory materials for deck that comply with requirements indicated.

Mechanical Fasteners: Corrosion-resistant, low-velocity, power-actuated or pneumatically driven carbon-steel fasteners; or self-drilling, self-threading screws.

Side-Lap Fasteners: Corrosion-resistant, hexagonal washer head; self-drilling, carbon-steel screws, No. 10 minimum diameter, or mechanically clinched sidelaps.

Flexible Closure Strips: Vulcanized, closed-cell, synthetic rubber.

Miscellaneous Sheet Metal Deck Accessories: Steel sheet, minimum yield strength of 33,000 psi, not less than 0.0359-inch design uncoated thickness, of same material and finish as deck; of profile indicated or required for application.

Pour Stops and Girder Fillers: Steel sheet, minimum yield strength of 33,000 psi, of same material and finish as deck, and of thickness and profile recommended by SDI Publication No. 30 for overhang and slab depth.

Column Closures, End Closures, Z-Closures, and Cover Plates: Steel sheet, of same material, finish, and thickness as deck, unless otherwise indicated.

Weld Washers: Uncoated steel sheet, shaped to fit deck rib, 0.0747 inch thick, with factory- punched hole of 3/8-inch minimum diameter.

Recessed Sump Pans: Single-piece steel sheet, 0.0747 inch thick, of same material and finish as deck, with 3-inch- wide flanges and sloped recessed pans of 1-1/2-inch minimum depth. For drains, cut holes in the field.

Galvanizing Repair Paint: ASTM A 780. Products used within the weather barrier shall have a maximum VOC content of 250 g/L.

Repair Paint: Manufacturer's standard rust-inhibitive primer of same color as primer.

Execution

Examination

Examine supporting frame and field conditions for compliance with requirements for installation tolerances and other conditions affecting performance.

Installation, General

Install deck panels and accessories according to applicable specifications and commentary in SDI Publication No. 30, manufacturer's written instructions, and requirements in this Section.

Install temporary shoring before placing deck panels, if required to meet deflection limitations.

Locate deck bundles to prevent overloading of supporting members.

Place deck panels on supporting frame and adjust to final position with ends accurately aligned and bearing on supporting frame before being permanently fastened. Do not stretch or contract side-lap interlocks.

1. Align cellular deck panels over full length of cell runs and align cells at ends of abutting panels.

Place deck panels flat and square and fasten to supporting frame without warp or deflection.

Cut and neatly fit deck panels and accessories around openings and other work projecting through or adjacent to deck.

Provide additional reinforcement and closure pieces at openings as required for strength, continuity of deck, and support of other work.

Comply with AWS requirements and procedures for manual shielded metal arc welding, appearance and quality of welds, and methods used for correcting welding work.

Mechanical fasteners may be used in lieu of welding to fasten deck. Locate mechanical fasteners and install according to deck manufacturer's written instructions.

Roof-Deck Installation

Fasten roof-deck panels to steel supporting members by arc spot (puddle) welds of the surface diameter indicated or arc seam welds with an equal perimeter that is not less than 1-1/2 inches long, and as follows:

1. Weld Diameter: as indicated.
2. Weld Spacing: Weld edge and interior ribs of deck units with a minimum of two welds per deck unit at each support. Space welds as indicated.
3. Weld Washers: Install weld washers at each weld location.

Side-Lap and Perimeter Edge Fastening: Fasten side laps and perimeter edges of panels between supports, at intervals as indicated on the drawings, but not exceeding the lesser of 1/2 of the span or 18 inches, and as follows:

1. Mechanically fasten with self-drilling, No. 10 diameter or larger, carbon-steel screws.
2. Fasten with a minimum of 1-1/2-inch- long welds.
3. Mechanical clinching where indicated. Submit system, type, and tools.
4. An alternate side lap fastening system may be submitted but the spacing shall not exceed that shown on the drawings.
5. Welding and button punching will not be allowed.

End Bearing: Install deck ends over supporting frame with a minimum end bearing of 1-1/2 inches, with end joints as follows:

1. End Joints: Lapped 2 inches minimum.

Roof Sump Pans and Sump Plates: Install over openings provided in roof deck and mechanically fasten flanges to top of deck. Space mechanical fasteners not more than 12 inches apart with at least one fastener at each corner.

1. Install reinforcing channels or zees in ribs to span between supports and weld or mechanically fasten.

Miscellaneous Roof-Deck Accessories: Install ridge and valley plates, finish strips, end closures, and reinforcing channels according to deck manufacturer's written instructions. Weld or mechanically fasten to substrate to provide a complete deck installation.

1. Weld cover plates at changes in direction of roof-deck panels, unless otherwise indicated.

Flexible Closure Strips: Install flexible closure strips over partitions, walls, and where indicated. Install with adhesive according to manufacturer's written instructions to ensure complete closure.

Floor-Deck Installation

Fasten floor-deck panels to steel supporting members by arc spot (puddle) welds of the surface diameter indicated and as follows:

1. Weld Diameter: as indicated.

2. Weld Spacing: Weld edge ribs of panels at each support. Space additional welds an average of 12 inches apart, but not more than 18 inches apart.
3. Weld Washers: Install weld washers at each weld location.

Side-Lap and Perimeter Edge Fastening: Fasten side laps and perimeter edges of panels between supports, at intervals not exceeding as indicated on the plans, the lesser of half of the span or 36 inches, and as follows:

1. Mechanically fasten with self-drilling, No. 10 diameter or larger, carbon-steel screws.
2. An alternate side lap fastening system may be submitted but the spacing shall not exceed that shown on the drawings. Welding and button punching will not be allowed.

End Bearing: Install deck ends over supporting frame with a minimum end bearing of 1-1/2 inches, with end joints as follows:

1. End Joints: Butted.

Pour Stops and Girder Fillers: Weld steel sheet pour stops and girder fillers to supporting structure according to SDI recommendations, unless otherwise indicated.

Floor-Deck Closures: Weld steel sheet column closures, cell closures, and Z-closures to deck, according to SDI recommendations, to provide tight-fitting closures at open ends of ribs and sides of deck.

Field Quality Control

Testing Agency: Owner will engage a qualified independent testing and inspecting agency to perform field tests and inspections and prepare test reports.

Field welds will be subject to inspection.

Remove and replace work that does not comply with specified requirements.

Additional inspecting, at Contractor's expense, will be performed to determine compliance of corrected work with specified requirements.

Repairs and Protection

Galvanizing Repairs: Prepare and repair damaged galvanized coatings on both surfaces of deck with galvanized repair paint according to ASTM A 780 and manufacturer's written instructions.

Repair Painting: Wire brush and clean rust spots, welds, and abraded areas on both surfaces of prime-painted deck immediately after installation, and apply repair paint.

1. Apply repair paint, of same color as adjacent shop-primed deck, to bottom surfaces of deck exposed to view.
2. Wire brushing, cleaning, and repair painting of bottom deck surfaces are included in Section 10-25, "Clean and Paint Existing Concrete and Steel Surfaces."

Provide final protection and maintain conditions to ensure that steel deck is without damage or deterioration at time of Substantial Completion.

12-2.5 Cold-Formed Metal Framing

General

Related Documents

Drawings and general provisions of the Contract, including General and Supplementary Conditions and Division 01 Specification Sections, apply to this Section.

Summary

This Section includes the following:

1. Exterior non-load-bearing wall framing.
2. Parapet framing supporting skylights.

Performance Requirements

Structural Performance: Design and provide cold-formed metal framing capable of withstanding design loads within limits and under conditions indicated.

1. Design Loads: As follows:
   a. Dead Loads: Weights of materials and construction.
   b. Wind Loads: As indicated on the structural drawings.
   c. Seismic Loads: As indicated on the structural drawings.
   d. Governing Building Codes: As indicated on the structural drawings.
2. Deflection Limits: Design framing systems to withstand design loads without deflections greater than the following:
   a. Exterior Load-Bearing and Non-Load-Bearing Framing: The lesser of: Horizontal deflection of 1/240 of the wall height, but no more than 1 inch maximum.
   b. Ceiling Joist Framing: The lesser of: Vertical deflection of 1/360 of the span, but no more than 1 inch maximum.
   c. Roof Joists: Less of Vertical deflection of 1/360 of the span.
   d. Skylights: Limit vertical and horizontal deflection to less than 1/1,000 of the span.

3. Design framing systems to provide for movement of framing members without damage or overstressing, sheathing failure, connection failure, undue strain on fasteners anchors, or other detrimental effects when subject to a maximum ambient temperature change of 120 deg F.
4. Design framing systems to provide for horizontal story-to-story drift movement of primary building framing members when subjected to wind or seismic forces without overstressing, sheathing failure, connection failure, or other detrimental effects when subject to a maximum amplified story-to-story drift of ¾-inch.
5. Design framing system to maintain clearances at openings, to allow for construction tolerances, and to accommodate live load deflection of primary building structure as follows:
   a. Upward and downward movement of at least 1 inch in each direction from initial installation gap condition.
6. Provide minimum 18 gage thickness for all exterior studs. Provide double studs and horizontal blocking along all panel joints. Coordinate with metal panel manufacturer's requirements and warranty conditions.

Cold-Formed Steel Framing, General: Design according to AISI's "Standard for Cold-Formed Steel Framing - General Provisions."

1. Headers: Design according to AISI's "Standard for Cold-Formed Steel Framing – Header Design."
2. Design exterior load-bearing and non-load-bearing wall framing to accommodate horizontal deflection without regard for contribution of sheathing materials.
3. Design strap bracing system to resist all lateral loads and to provide permanent stability of stair enclosure.

Submittals

Product Data: For each type of cold-formed metal framing product and accessory indicated.

Shop Drawings: Signed and sealed by the qualified professional Engineer responsible for their preparation. Show layout, spacings, sizes, thicknesses, and types of cold-formed metal framing; fabrication; and fastening and anchorage details, including mechanical fasteners. Show reinforcing channels, opening framing, supplemental framing, strapping, bracing, bridging, splices, accessories, connection details, and attachment to adjoining work.

1. For cold-formed metal framing indicated to comply with design loads, include structural analysis data signed and sealed by the qualified professional Engineer responsible for their preparation.

Welding certificates.

Qualification Data: For Installer, and for professional Engineer.

Product Test Reports: From a qualified testing agency, unless otherwise stated, indicating that each of the following complies with requirements, based on evaluation of comprehensive tests for current products:

1. Steel sheet.
2. Expansion anchors.
3. Power-actuated anchors.
4. Mechanical fasteners.
5. Vertical deflection clips.
6. Horizontal drift deflection clips
7. Miscellaneous structural clips and accessories.

Research/Evaluation Reports: For cold-formed metal framing.

Quality Assurance

Engineering Responsibility: Preparation of Shop Drawings, design calculations, and other structural data by a qualified professional Engineer.

Professional Engineer Qualifications: A professional Engineer who is legally qualified to practice in jurisdiction where Project is located and who is experienced in providing Engineering services of the kind indicated. Engineering services are defined as those performed for installations of cold-formed metal framing that are similar to those indicated for this Project in material, design, and extent.

Testing Agency Qualifications: An independent testing agency, acceptable to authorities having jurisdiction, qualified according to ASTM E 329 to conduct the testing indicated.

Product Tests: Mill certificates or data from a qualified independent testing agency, or in-house testing with calibrated test equipment indicating steel sheet complies with requirements, including base-metal thickness, yield strength, tensile strength, total elongation, chemical requirements, ductility, and metallic-coating thickness.

Welding: Qualify procedures and personnel according to AWS D1.1/D1.1M, "Structural Welding Code--Steel," and AWS D1.3, "Structural Welding Code--Sheet Steel."

AISI Specifications and Standards: Comply with AISI's "North American Specification for the Design of Cold-Formed Steel Structural Members" and its "Standard for Cold-Formed Steel Framing - General Provisions."

1. Comply with AISI's "Standard for Cold-Formed Steel Framing - Truss Design."
2. Comply with AISI's "Standard for Cold-Formed Steel Framing - Header Design."

Comply with AISI's "Standard for Cold-Formed Steel Framing - Prescriptive Method for One and Two Family Dwellings."

Preinstallation Conference: Conduct a preinstallation conference at Project site.

Delivery, Storage, and Handling

Protect cold-formed metal framing from corrosion, deformation, and other damage during delivery, storage, and handling.

Store cold-formed metal framing, protect with a waterproof covering, and ventilate to avoid condensation.

Products

Manufacturers

Available Manufacturers: Subject to compliance with requirements, manufacturers offering cold-formed metal framing that may be incorporated into the Work include, but are not limited to, the following:

Manufacturers: Subject to compliance with requirements, provide cold-formed metal framing by one of the following:

1. Allied Studco.
2. AllSteel Products, Inc.
3. California Expanded Metal Products Company.
4. Clark Steel Framing.
5. Consolidated Fabricators Corp.; Building Products Division.
6. Craco Metals Manufacturing, LLC.
7. Custom Stud, Inc.
8. Dale/Incor.
9. Design Shapes in Steel.
10. Dietrich Metal Framing; a Worthington Industries Company.
11. Formetal Co. Inc. (The).
12. Innovative Steel Systems.
13. MarinoWare; a division of Ware Industries.
14. Quail Run Building Materials, Inc.
15. SCAFCO Corporation.
16. Southeastern Stud & Components, Inc.
17. Steel Construction Systems.
18. Steeler, Inc.
19. Super Stud Building Products, Inc.
20. United Metal Products, Inc.

Materials

Steel Sheet: ASTM A 1003/A 1003M, Structural Grade, Type H, metallic coated, of grade and coating weight as follows:

1. Grade: As required by structural performance.
2. Coating: G90 or equivalent.

Steel Sheet for Vertical Deflection and Drift Clips: ASTM A 653/A 653M, structural steel, zinc coated, of grade and coating as follows:

1. Grade: As required by structural performance.
2. Coating: G90.

Exterior Load-Bearing and Non-Load-Bearing Wall Framing

Steel Studs: Manufacturer's standard C-shaped steel studs, of web depths indicated, punched, with stiffened flanges, and as follows:

1. Minimum Base-Metal Thickness: 18 gage.
2. Flange Width: 1-5/8 inches minimum, or wider as required by metal panel manufacturer.

Steel Track: Manufacturer's standard U-shaped steel track, of web depths indicated, unpunched, with unstiffened flanges, and as follows:

1. Minimum Base-Metal Thickness: Matching steel studs.
2. Flange Width: 1-1/4 inches minimum.

Vertical Deflection Clips: Manufacturer's standard bypass and head clips, capable of accommodating upward and downward vertical displacement of primary structure through positive mechanical attachment to stud web.

1. Available Manufacturers: Subject to compliance with requirements, manufacturers offering products that may be incorporated into the Work include, but are not limited to, the following:
2. Manufacturers: Subject to compliance with requirements, provide products by one of the following:
   a. Dietrich Metal Framing; a Worthington Industries Company.
   b. MarinoWare, a division of Ware Industries.
   c. SCAFCO Corporation
   d. The Steel Network, Inc.

Double Deflection Tracks: Manufacturer's double, deep-leg, U-shaped steel tracks, consisting of nested inner and outer tracks; unpunched, with unstiffened flanges.

1. Outer Track: Of web depth to allow free vertical movement of inner track, with flanges designed to support horizontal and lateral loads and transfer them to the primary structure, and as follows:
   a. Minimum Base-Metal Thickness: As required for structural loads and deflection limits.
   b. Flange Width: As required for structural loads and deflection limits.
2. Inner Track: Of web depth indicated, and as follows:
   a. Minimum Base-Metal Thickness: 18 gage minimum.
   b. Flange Width: dimension equal to sum of outer deflection track flange width plus 1 inch.

Drift Clips: Manufacturer's standard bypass or head clips, capable of isolating wall stud from upward and downward vertical displacement and lateral drift of primary structure.

Framing Accessories

Fabricate steel-framing accessories from steel sheet, ASTM A 1003/A 1003M, Structural Grade, Type H, metallic coated, of same grade and coating weight used for framing members.

Provide accessories of manufacturer's standard thickness and configuration, unless otherwise indicated, as follows:

1. Supplementary framing.
2. Bracing, bridging, and solid blocking.
3. Web stiffeners.
4. Anchor clips.
5. End clips.
6. Foundation clips.
7. Gusset plates.
8. Stud kickers, knee braces, and girts.
9. Joist hangers and end closures.
10. Hole reinforcing plates.
11. Backer plates.

Anchors, Clips, and Fasteners

Steel Shapes and Clips: ASTM A 36/A 36M, zinc coated by hot-dip process according to ASTM A 123/A 123M.

Anchor Bolts: ASTM F 1554, Grade 36, threaded carbon-steel hex-headed bolts and carbon- steel nuts; and flat, hardened-steel washers; zinc coated by hot-dip process according to ASTM A 153/A 153M, Class C.

Expansion Anchors: Fabricated from corrosion-resistant materials, with capability to sustain, without failure, a load equal to 5 times design load, as determined by testing per ASTM E 488 conducted by a qualified independent testing agency.

Mechanical Fasteners: ASTM C 1513, corrosion-resistant-coated, self-drilling, self-tapping steel drill screws.

1. Head Type: Low-profile head beneath sheathing, manufacturer's standard elsewhere.

Welding Electrodes: Comply with AWS standards.

Miscellaneous Materials

Galvanizing Repair Paint: SSPC-Paint 20 or DOD-P-21035, or ASTM A 780. Products applied within the weather barrier shall have a maximum VOC content of 250 g/L.

Cement Grout: Portland cement, ASTM C 150, Type I; and clean, natural sand, ASTM C 404. Mix at ratio of 1 part cement to 2-1/2 parts sand, by volume, with minimum water required for placement and hydration.

Nonmetallic, Nonshrink Grout: Premixed, nonmetallic, noncorrosive, nonstaining grout containing selected silica sands, portland cement, shrinkage-compensating agents, and plasticizing and water-reducing agents, complying with ASTM C 1107, with fluid consistency and 30-minute working time.

Shims: Load bearing, high-density multimonomer plastic, nonleaching.

Sealer Gaskets: Closed-cell neoprene foam, 1/4 inch thick, selected from manufacturer's standard widths to match width of bottom track or rim track members.

Fabrication

Fabricate cold-formed metal framing and accessories plumb, square, and true to line, and with connections securely fastened, according to referenced AISI's specifications and standards, manufacturer's written instructions, and requirements in this Section.

1. Fabricate framing assemblies using jigs or templates.
2. Cut framing members by sawing or shearing; do not torch cut.
3. Fasten cold-formed metal framing members by welding, screw fastening, clinch fastening, or riveting as standard with fabricator. Wire tying of framing members is not permitted.
   a. Comply with AWS D1.3 requirements and procedures for welding, appearance and quality of welds, and methods used in correcting welding work.
   b. Locate mechanical fasteners and install according to Shop Drawings, with screw penetrating joined members by not less than three exposed screw threads.
4. Fasten other materials to cold-formed metal framing by welding, bolting, or screw fastening, according to Shop Drawings.

Reinforce, stiffen, and brace framing assemblies to withstand handling, delivery, and erection stresses. Lift fabricated assemblies to prevent damage or permanent distortion.

Fabrication Tolerances: Fabricate assemblies level, plumb, and true to line to a maximum allowable tolerance variation of 1/8 inch in 10 feet and as follows:

1. Spacing: Space individual framing members no more than plus or minus 1/8 inch from plan location. Cumulative error shall not exceed minimum fastening requirements of sheathing or other finishing materials.
2. Squareness: Fabricate each cold-formed metal framing assembly to a maximum out-of-square tolerance of 1/8 inch.

Execution

Examination

Examine supporting substrates and abutting structural framing for compliance with requirements for installation tolerances and other conditions affecting performance.

1. Proceed with installation only after unsatisfactory conditions have been corrected.

Preparation

Install load bearing shims or grout between the underside of wall bottom track or rim track and the top of foundation wall or slab at stud or joist locations to ensure a uniform bearing surface on supporting concrete or masonry construction.

Install sealer gaskets to isolate the underside of wall bottom track or rim track and the top of foundation wall or slab at stud or joist locations.

Installation, General

Cold-formed metal framing may be shop or field fabricated for installation, or it may be field assembled.

Install cold-formed metal framing according to AISI's "Standard for Cold-Formed Steel Framing - General Provisions" and to manufacturer's written instructions unless more stringent requirements are indicated.

Install shop- or field-fabricated, cold-formed framing and securely anchor to supporting structure.

1. Screw, bolt, or weld wall panels at horizontal and vertical junctures to produce flush, even, true-to-line joints with maximum variation in plane and true position between fabricated panels not exceeding 1/16 inch.

Install cold-formed metal framing and accessories plumb, square, and true to line, and with connections securely fastened.

1. Cut framing members by sawing or shearing; do not torch cut.
2. Fasten cold-formed metal framing members by welding, screw fastening, clinch fastening, or riveting. Wire tying of framing members is not permitted.
   a. Comply with AWS D1.3 requirements and procedures for welding, appearance and quality of welds, and methods used in correcting welding work.
   b. Locate mechanical fasteners and install according to Shop Drawings, and complying with requirements for spacing, edge distances, and screw penetration.

Install framing members in one-piece lengths unless splice connections are indicated for track or tension members.

Install temporary bracing and supports to secure framing and support loads comparable in intensity to those for which structure was designed. Maintain braces and supports in place, undisturbed, until entire integrated supporting structure has been completed and permanent connections to framing are secured.

Do not bridge building expansion and control joints with cold-formed metal framing. Independently frame both sides of joints.

Fasten hole reinforcing plate over web penetrations that exceed size of manufacturer's standard punched openings.

Erection Tolerances: Install cold-formed metal framing level, plumb, and true to line to a maximum allowable tolerance variation of 1/8 inch in 10 feet and as follows:

1. Space individual framing members no more than plus or minus 1/8 inch from plan location. Cumulative error shall not exceed minimum fastening requirements of sheathing or other finishing materials.

Exterior Non-Load-Bearing Wall Installation

Install continuous tracks sized to match studs. Align tracks accurately and securely anchor to supporting structure as indicated.

Fasten both flanges of studs to top and bottom track, unless otherwise indicated. Space studs as follows:

1. Stud Spacing: 16 inches maximum.

Set studs plumb, except as needed for diagonal bracing or required for nonplumb walls or warped surfaces and similar requirements.

Isolate non-load-bearing steel framing from building structure to prevent transfer of vertical loads while providing lateral support.

1. Install single-leg deflection tracks and anchor to building structure.
2. Install double deep-leg deflection tracks and anchor outer track to building structure.
3. Connect vertical deflection clips to bypassing and infill studs and anchor to building structure.
4. Connect drift clips to cold formed metal framing and anchor to building structure.

Install horizontal bridging in wall studs, spaced in rows indicated on Shop Drawings but not more than 48 inches apart. Fasten at each stud intersection.

1. Top Bridging for Single Deflection Track: Install row of horizontal bridging within 12 inches of single deflection track. Install a combination of flat, taut, steel sheet straps of width and thickness indicated and stud or stud-track solid blocking of width and thickness matching studs. Fasten flat straps to stud flanges and secure solid blocking to stud webs or flanges.
   a. Install solid blocking at centers indicated on Shop Drawings.
2. Bridging: Cold-rolled steel channel, welded or mechanically fastened to webs of punched studs.

3. Bridging: Combination of flat, taut, steel sheet straps of width and thickness indicated and stud-track solid blocking of width and thickness to match studs. Fasten flat straps to stud flanges and secure solid blocking to stud webs or flanges.
4. Bridging: Proprietary bridging bars installed according to manufacturer's written instructions.

Install miscellaneous framing and connections, including stud kickers, web stiffeners, clip angles, continuous angles, anchors, fasteners, and stud girts, to provide a complete and stable wall-framing system.

Joist Installation

Install perimeter joist track sized to match joists. Align and securely anchor or fasten track to supporting structure at corners, ends, and spacings indicated on Shop Drawings.

Install joists bearing on supporting frame, level, straight, and plumb; adjust to final position, brace, and reinforce. Fasten joists to both flanges of joist track.

1. Install joists over supporting frame with a minimum end bearing of 1-1/2 inches.
2. Reinforce ends and bearing points of joists with web stiffeners, end clips, joist hangers, steel clip angles, or steel-stud sections as indicated on Shop Drawings.

Space joists not more than 2 inches from abutting walls, and as follows:

1. Joist Spacing: 24 inches maximum, or less where indicated on drawings.

Frame openings with built-up joist headers consisting of joist and joist track, nesting joists, or another combination of connected joists if indicated.

Install joist reinforcement at interior supports with single, short length of joist section located directly over interior support, with lapped joists of equal length to joist reinforcement, or as indicated on Shop Drawings.

1. Install web stiffeners to transfer axial loads of walls above.

Install bridging at intervals indicated on Shop Drawings. Fasten bridging at each joist intersection as follows:

1. Bridging: Joist-track solid blocking of width and thickness indicated, secured to joist webs.
2. Bridging: Combination of flat, taut, steel sheet straps of width and thickness indicated and joist-track solid blocking of width and thickness indicated. Fasten flat straps to bottom flange of joists and secure solid blocking to joist webs.

Secure joists to load-bearing interior walls to prevent lateral movement of bottom flange.

Install miscellaneous joist framing and connections, including web stiffeners, closure pieces, clip angles, continuous angles, hold-down angles, anchors, and fasteners, to provide a complete and stable joist-framing assembly.

Field Quality Control

Testing: Owner will engage a qualified independent testing and inspecting agency to perform field tests and inspections and prepare test reports.

Field and shop welds will be subject to testing and inspecting.

Testing agency will report test results promptly and in writing to Contractor and Architect.

Remove and replace work where test results indicate that it does not comply with specified requirements.

Additional testing and inspecting, at Contractor's expense, will be performed to determine compliance of replaced or additional work with specified requirements.

Repairs and Protection

Galvanizing Repairs: Prepare and repair damaged galvanized coatings on fabricated and installed cold-formed metal framing with galvanized repair paint according to ASTM A 780 and manufacturer's written instructions.

Provide final protection and maintain conditions, in a manner acceptable to manufacturer and Installer, that ensure that cold-formed metal framing is without damage or deterioration at time of Substantial Completion.

12-2.6 Metal Fabrications

General

Summary

1. Steel framing and supports for applications where framing and supports are not specified in other Sections.

Performance Requirements

Structural Performance of Ladders: Provide ladders capable of withstanding the effects of loads and stresses within limits and under conditions specified in ANSI A14.3.

Thermal Movements: Provide exterior metal fabrications that allow for thermal movements resulting from the following maximum change (range) in ambient and surface temperatures by preventing buckling, opening of joints, overstressing of components, failure of connections, and other detrimental effects. Base Engineering calculation on surface temperatures of materials due to both solar heat gain and nighttime-sky heat loss.

1. Temperature Change (Range): 120 deg F, ambient; 180 deg F, material surfaces.

Submittals

Product Data: For the following:

1. Nonslip aggregates and nonslip-aggregate surface finishes.
2. Metal nosings and treads.
3. Paint products.
4. Grout.

Shop Drawings: Show fabrication and installation details for metal fabrications.

1. Include plans, elevations, sections, and details of metal fabrications and their connections. Show anchorage and accessory items.
2. Provide templates for anchors and bolts specified for installation under other Sections.
3. For installed products indicated to comply with design loads, include structural analysis data signed and sealed by the qualified professional Engineer responsible for their preparation.

Samples for Verification: For each type and finish of extruded nosing and tread.

Mill Certificates: Signed by manufacturers of stainless-steel sheet certifying that products furnished comply with requirements.

Welding certificates.

Qualification Data: For professional Engineer.

LEED Submittals:

1. Product Data for Credit MR 4.1 and MR 4.2: Indicating percentages by weight of Post-consumer and Pre-consumer Recycled Content for products having recycled content. Include statement indicating Material Cost for each product having recycled content.
2. Product Data for Credit EQ 4.2 for each field applied primer, paint and coating within the building weather barrier, including printed statement of VOC content and material safety data sheets.

Quality Assurance

Welding: Qualify procedures and personnel according to the following:

1. AWS D1.1, "Structural Welding Code--Steel."
2. AWS D1.2, "Structural Welding Code--Aluminum."
3. AWS D1.3, "Structural Welding Code--Sheet Steel."
4. AWS D1.6, "Structural Welding Code--Stainless Steel."

Project Conditions

Field Measurements: Verify actual locations of walls and other construction contiguous with metal fabrications by field measurements before fabrication and indicate measurements on Shop Drawings.

Coordination

Coordinate installation of anchorages for metal fabrications. Furnish setting drawings, templates, and directions for installing anchorages, including sleeves, concrete inserts, anchor bolts, and items with integral anchors, that are to be embedded in concrete or masonry. Deliver such items to Project site in time for installation.

Coordinate installation of steel weld plates and angles for casting into concrete that are specified in this Section but required for work of another Section. Deliver such items to Project site in time for installation.

Products

Metals, General

Metal Surfaces, General: Provide materials with smooth, flat surfaces, unless otherwise indicated. For metal fabrications exposed to view in the completed Work, provide materials without seam marks, roller marks, rolled trade names, or blemishes.

Ferrous Metals

Steel Plates, Shapes, and Bars: ASTM A 36/A 36M.

Stainless-Steel Sheet, Strip, Plate, and Flat Bars: ASTM A 666, Type 304.

Stainless-Steel Bars and Shapes: ASTM A 276, Type 304 .

Rolled-Steel Floor Plate: ASTM A 786/A 786M, rolled from plate complying with ASTM A 36/A 36M or ASTM A 283/A 283M, Grade C or D. E. Rolled-Stainless-Steel Floor Plate: ASTM A 793.

Steel Tubing: ASTM A 500, cold-formed steel tubing.

Steel Pipe: ASTM A 53/A 53M, standard weight (Schedule 40), unless another weight is indicated or required by structural loads.

Slotted Channel Framing: Cold-formed metal channels with continuous slot complying with MFMA-3.

1. Size of Channels: As indicated on the Drawings.
2. Material: Galvanized steel complying with ASTM A 653/A 653M, commercial steel, Type B, structural steel, Grade 33, with G90 coating; 0.079-inch nominal thickness.
3. Material: Steel complying with ASTM A 1008/A 1008M, commercial steel, Type B structural steel, Grade 33; 0.0677-inch minimum thickness; coated with rust-inhibitive.

Nonferrous Metals

Aluminum Plate and Sheet: ASTM B 209, Alloy 6061-T6.

Aluminum Extrusions: ASTM B 221, Alloy 6063-T6.

Aluminum-Alloy Rolled Tread Plate: ASTM B 632/B 632M, Alloy 6061-T6.

Aluminum Castings: ASTM B 26/B 26M, Alloy 443.0-F.

Bronze Plate, Sheet, Strip, and Bars: ASTM B 36/B 36M, Alloy UNS No. C28000 (muntz metal, 60 percent copper).

Bronze Extrusions: ASTM B 455, Alloy UNS No. C38500 (extruded architectural bronze).

Nickel Silver Extrusions: ASTM B 151/B 151M, Alloy UNS No. C74500.

Nickel Silver Castings: ASTM B 584, Alloy UNS No. C97600 (20 percent leaded nickel bronze).

Fasteners

Steel Bolts and Nuts: Regular hexagon-head bolts, ASTM A 307, Grade A; with hex nuts, ASTM A 563; and, where indicated, flat washers.

Stainless-Steel Bolts and Nuts: Regular hexagon-head annealed stainless-steel bolts, nuts and, where indicated, flat washers; ASTM F 593 for bolts and ASTM F 594 for nuts, Alloy Group 1.

Anchor Bolts: ASTM F 1554, Grade 36.

1. Provide hot-dip or mechanically deposited, zinc-coated anchor bolts where item being fastened is indicated to be galvanized.

Eyebolts: ASTM A 489.

Machine Screws: ASME B18.6.3.

Lag Bolts: ASME B18.2.1.

Wood Screws: Flat head, ASME B18.6.1.

Plain Washers: Round, ASME B18.22.1.

Lock Washers: Helical, spring type, ASME B18.21.1.

Cast-in-Place Anchors in Concrete: Anchors capable of sustaining, without failure, a load equal to four times the load imposed, as determined by testing according to ASTM E 488, conducted by a qualified independent testing agency.

1. Threaded or wedge type; galvanized ferrous castings, either ASTM A 47/A 47M malleable iron or ASTM A 27/A 27M cast steel. Provide bolts, washers, and shims as needed, hot-dip galvanized per ASTM A 153/A 153M.

Expansion Anchors: Anchor bolt and sleeve assembly with capability to sustain, without failure, a load equal to six times the load imposed when installed in unit masonry and four times the load imposed when installed in concrete, as determined by testing according to ASTM E 488, conducted by a qualified independent testing agency.

1. Material for Anchors in Interior Locations: Carbon-steel components zinc-plated to comply with ASTM B 633, Class Fe/Zn 5.
2. Material for Anchors in Exterior Locations: Alloy Group **1** stainless-steel bolts complying with ASTM F 593 and nuts complying with ASTM F 594.

Miscellaneous Materials

Welding Rods and Bare Electrodes: Select according to AWS specifications for metal alloy welded.

Shop Primers: Provide primers that comply with Division 09 painting Sections.

Universal Shop Primer: Fast-curing, lead- and chromate-free, universal modified-alkyd primer complying with MPI#79.

1. Use primer with a VOC content of 420 g/L (3.5 lb/gal.) or less when calculated according to 40 CFR 59, Subpart D (EPA Method 24).
2. Use primer containing pigments that make it easily distinguishable from zinc-rich primer.

Zinc-Rich Primer: Complying with SSPC-Paint 20 or SSPC-Paint 29 and compatible with topcoat.

1. Use primer with a VOC content of 420 g/L (3.5 lb/gal.) or less when calculated according to 40 CFR 59, Subpart D (EPA Method 24).
2. Products:
   a. Benjamin Moore & Co.; Epoxy Zinc-Rich Primer CM18/19.
   b. Carboline Company; Carbozinc 621.
   c. ICI Devoe Coatings; Catha-Coat 313.
   d. International Coatings Limited; Interzinc 315 Epoxy Zinc-Rich Primer.
   e. PPG Architectural Finishes, Inc.; Aquapon Zinc-Rich Primer 97-670.
   f. Sherwin-Williams Company (The); Corothane I GalvaPac Zinc Primer.
   g. Tnemec Company, Inc.; Tneme-Zinc 90-97.

Galvanizing Repair Paint: High-zinc-dust-content paint for regalvanizing welds in steel, complying with SSPC-Paint 20. Products applied within the building weather barrier shall not exceed VOC content of 250 g/L.

Bituminous Paint: Cold-applied asphalt emulsion complying with ASTM D 1187. Products applied within the building weather barrier shall not exceed VOC content of 250 g/L.

Nonshrink, Metallic Grout: Factory-packaged, ferrous-aggregate grout complying with ASTM C 1107, specifically recommended by manufacturer for heavy-duty loading applications.

Nonshrink, Nonmetallic Grout: Factory-packaged, nonstaining, noncorrosive, nongaseous grout complying with ASTM C 1107. Provide grout specifically recommended by manufacturer for interior and exterior applications.

Concrete Materials and Properties: Comply with requirements in Section 8-2 and Section 10-23 Concrete Structures for normal-weight, air-entrained, ready-mix concrete with a minimum 28-day compressive strength of 3000 psi, unless otherwise indicated.

Fabrication, General

Shop Assembly: Preassemble items in the shop to greatest extent possible. Disassemble units only as necessary for shipping and handling limitations. Use connections that maintain structural value of joined pieces. Clearly mark units for reassembly and coordinated installation.

Cut, drill, and punch metals cleanly and accurately. Remove burrs and ease edges to a radius of approximately 1/32 inch, unless otherwise indicated. Remove sharp or rough areas on exposed surfaces.

Form bent-metal corners to smallest radius possible without causing grain separation or otherwise impairing work.

Form exposed work true to line and level with accurate angles and surfaces and straight edges.

Weld corners and seams continuously to comply with the following:

1. Use materials and methods that minimize distortion and develop strength and corrosion resistance of base metals.
2. Obtain fusion without undercut or overlap.
3. Remove welding flux immediately.
4. At exposed connections, finish exposed welds and surfaces smooth and blended so no roughness shows after finishing and contour of welded surface matches that of adjacent surface.

Form exposed connections with hairline joints, flush and smooth, using concealed fasteners where possible. Where exposed fasteners are required, use Phillips flat-head (countersunk) screws or bolts, unless otherwise indicated. Locate joints where least conspicuous.

Fabricate seams and other connections that will be exposed to weather in a manner to exclude water. Provide weep holes where water may accumulate.

Cut, reinforce, drill, and tap metal fabrications as indicated to receive finish hardware, screws, and similar items.

Provide for anchorage of type indicated; coordinate with supporting structure. Space anchoring devices to secure metal fabrications rigidly in place and to support indicated loads.

1. Where units are indicated to be cast into concrete or built into masonry, equip with integrally welded steel strap anchors, 1/8 by 1-1/2 inches, with a minimum 6-inch embedment and 2-inch hook, not less than 8 inches from ends and corners of units and 24 inches o.c., unless otherwise indicated.

Miscellaneous Framing and Supports

General: Provide steel framing and supports not specified in other Sections as needed to complete the Work.

Fabricate units from steel shapes, plates, and bars of welded construction, unless otherwise indicated. Fabricate to sizes, shapes, and profiles indicated and as necessary to receive adjacent construction retained by framing and supports. Cut, drill, and tap units to receive hardware, hangers, and similar items.

1. Fabricate units from slotted channel framing where indicated.
2. Furnish inserts if units are installed after concrete is placed.

Fabricate supports for operable partitions from continuous steel beams of sizes indicated with attached bearing plates, anchors, and braces as indicated. Drill bottom flanges of beams to receive partition track hanger rods; locate holes where indicated on operable partition Shop Drawings.

Galvanize miscellaneous framing and supports where indicated.

Prime miscellaneous framing and supports with zinc-rich primer where indicated.

Loose Steel Lintels

Fabricate loose steel lintels from steel angles and shapes of size indicated for openings and recesses in masonry walls and partitions at locations indicated. Weld adjoining members together to form a single unit where indicated.

Size loose lintels to provide bearing length at each side of openings equal to 1/12 of clear span but not less than 8 inches, unless otherwise indicated.

Galvanize loose steel lintels located in exterior walls.

Prime loose steel lintels located in exterior walls with zinc-rich primer.

Shelf Angles

Fabricate shelf angles from steel angles of sizes indicated and for attachment to concrete framing. Provide horizontally slotted holes to receive 3/4-inch bolts, spaced not more than 6 inches from ends and 24 inches o.c., unless otherwise indicated.

1. Provide mitered and welded units at corners.
2. Provide open joints in shelf angles at expansion and control joints. Make open joint approximately 2 inches larger than expansion or control joint.

For cavity walls, provide vertical channel brackets to support angles from backup masonry and concrete.

Galvanize shelf angles located in exterior walls.

Prime shelf angles located in exterior walls with zinc-rich primer.

Furnish wedge-type concrete inserts, complete with fasteners, to attach shelf angles to cast-in- place concrete.

Loose Bearing And Leveling Plates

Provide loose bearing and leveling plates for steel items bearing on masonry or concrete construction. Drill plates to receive anchor bolts and for grouting.

Galvanize plates after fabrication.

Prime plates with zinc-rich primer.

Steel Weld Plates And Angles

Provide steel weld plates and angles not specified in other Sections, for items supported from concrete construction as needed to complete the Work. Provide each unit with not less than two integrally welded steel strap anchors for embedding in concrete.

Structural-Steel Door Frames

Fabricate structural-steel door frames from steel shapes, plates, and bars of size and to dimensions indicated, fully welded together, with 5/8-by-1-1/2-inch steel channel stops, unless otherwise indicated. Plug-weld built-up members and continuously weld exposed joints. Secure removable stops to frame with countersunk machine screws, uniformly spaced at not more than 10 inches o.c. Reinforce frames and drill and tap as necessary to accept finish hardware.

1. Provide with integrally welded steel strap anchors for securing door frames into adjoining concrete or masonry.

Extend bottom of frames to floor elevation indicated with steel angle clips welded to frames for anchoring frame to floor with expansion shields and bolts.

Galvanize exterior steel frames and interior steel frames, where indicated.

Prime exterior steel frames and interior steel frames, where indicated with zinc-rich primer.

Miscellaneous Steel Trim

Unless otherwise indicated, fabricate units from steel shapes, plates, and bars of profiles shown with continuously welded joints and smooth exposed edges. Miter corners and use concealed field splices where possible.

Provide cutouts, fittings, and anchorages as needed to coordinate assembly and installation with other work.

1. Provide with integrally welded steel strap anchors for embedding in concrete or masonry construction.

Galvanize exterior miscellaneous steel trim and interior miscellaneous steel trim, where indicated.

Prime exterior miscellaneous steel trim and interior miscellaneous steel trim, where indicated with zinc-rich primer.

Metal Ladders

General:

1. Comply with ANSI A14.3, unless otherwise indicated.
2. For elevator pit ladders, comply with ASME A17.1.
3. Space siderails 16 inches apart, unless otherwise indicated.
4. Support each ladder at top and bottom and not more than 60 inches o.c. with welded or bolted brackets, made from same metal as ladder.

Aluminum Ladders:

1. Siderails: Continuous extruded-aluminum channels or tubes, not less than 2-1/2 inches deep, 3/4 inch wide, and 1/8 inch thick.
2. Rungs: Extruded-aluminum tubes, not less than 3/4 inch deep and not less than 1/8 inch thick, with ribbed tread surfaces.
3. Fit rungs in centerline of siderails; fasten by welding or with stainless-steel fasteners or brackets and aluminum rivets.

Ladder Safety Cages

General:

1. Fabricate ladder safety cages to comply with ANSI A14.3. Assemble by welding or with stainless-steel fasteners.
2. Provide primary hoops at tops and bottoms of cages and spaced not more than 20 feet o.c. Provide secondary intermediate hoops spaced not more than 48 inches o.c. between primary hoops.
3. Fasten assembled safety cage to ladder rails and adjacent construction by welding or with stainless-steel fasteners, unless otherwise indicated.

Aluminum Ladder Safety Cages:

1. Primary Hoops: 1/4-by-4-inch flat bar hoops.
2. Secondary Intermediate Hoops: 1/4-by-2-inch flat bar hoops.
3. Vertical Bars: 1/4-by-2-inch flat bars secured to each hoop.

Metal Ships' Ladders

Provide metal ships' ladders where indicated. Fabricate of open-type construction with channel or plate stringers, pipe and tube railings, and bar grating treads, unless otherwise indicated. Provide brackets and fittings for installation.

1. Fabricate ships' ladders, including treads and railings from steel.
2. Comply with applicable requirements in Division 05 Section "Pipe and Tube Railings" for railings.

Galvanize exterior steel ships' ladders and interior steel ships' ladders, where indicated, including treads, railings, brackets, and fasteners.

Metal Bollards

Fabricate metal bollards from Schedule 40 steel pipe 1/4-inch wall-thickness rectangular steel tubing and steel shapes, as indicated.

1. Cap bollards with 1/4-inch- thick steel plate.
2. Where bollards are indicated to receive push-button controls for door operators, provide necessary cutouts for push-button controls and hole for wire.

Fabricate bollards with 3/8-inch- thick steel baseplates for bolting to concrete slab. Drill baseplates at all 4 corners for 3/4-inch anchor bolts.

1. Where bollards are to be anchored to sloping concrete slabs, angle baseplates for plumb alignment of bollards.

Fabricate sleeves for bollard anchorage from steel pipe or tubing with 1/4-inch- thick steel plate welded to bottom of sleeve. Make sleeves not less than 8 inches deep and 3/4 inch larger than OD of bollard.

Fabricate internal sleeves for removable bollards from Schedule 40 steel pipe or 1/4-inch wall- thickness steel tubing with an OD approximately 1/16 inch less than ID of bollards. Match drill sleeve and bollard for 3/4 inch steel machine bolt.

Pipe Guards

Fabricate pipe guards from 3/8-inch- thick by 12-inch- wide steel plate, bent to fit flat against the wall or column at both ends and to fit around pipe with 2-inch clearance between pipe and pipe guard. Drill each end for two 3/4-inch anchor bolts.

Galvanize pipe guards after fabrication.

Metal Floor Plate

Fabricate from **rolled-steel floor** plate of thickness indicated below:

1. Thickness: **3/16 inch**.

Provide **steel** angle supports as indicated.

Include **steel** angle stiffeners, and fixed and removable sections as indicated.

Provide flush **steel** bar drop handles for lifting removable sections, one at each end of each section.

Abrasive Metal Nosings

Cast Units: Cast nickel silver (leaded nickel bronze), with an integral-abrasive, as-cast finish consisting of aluminum oxide, silicon carbide, or a combination of both. Fabricate units in lengths necessary to accurately fit openings or conditions.

1. Manufacturers:
   a. American Safety Tread Co., Inc.
   b. Balco Inc.
   c. Barry Pattern & Foundry Co., Inc.
   d. Granite State Casting Co.
   e. Safe-T-Metal Company, Inc.
   f. Wooster Products Inc.
2. Nosings: Cross-hatched units, 4 inches wide with 1-inch lip, for casting into concrete steps.

Provide anchors for embedding units in concrete, either integral or applied to units, as standard with manufacturer.

Drill for mechanical anchors and countersink. Locate not more than 4 inches from ends and not more than 12 inches o.c., evenly spaced between ends, unless otherwise indicated. Provide closer spacing if recommended by manufacturer.

1. Provide 2 rows of holes for units more than 5 inches wide, with 2 holes aligned at ends and intermediate holes staggered.

Apply bituminous paint to concealed bottoms, sides, and edges of cast-metal units set into concrete.

Cast-Iron Wheel Guards

Provide wheel guards of 3/4-inch- thick, hollow-core, gray-iron castings; of size and shape indicated. Provide holes for countersunk anchor bolts and grouting.

Metal Downspout Boots

Provide downspout boots made from cast gray iron in heights indicated with inlets of size and shape to suit downspouts.

1. Outlet: Vertical or horizontal, to discharge into pipe.

Finishes, General

Comply with NAAMM's "Metal Finishes Manual for Architectural and Metal Products" for recommendations for applying and designating finishes.

Finish metal fabrications after assembly.

Steel And Iron Finishes

Galvanizing: Hot-dip galvanize items as indicated to comply with applicable standard listed below:

1. ASTM A 123/A 123M, for galvanizing steel and iron products.
2. ASTM A 153/A 153M, for galvanizing steel and iron hardware.

Preparation for Shop Priming: Prepare uncoated ferrous-metal surfaces to comply with minimum requirements indicated below for SSPC surface preparation specifications and environmental exposure conditions of installed metal fabrications:

1. Exteriors (SSPC Zone 1B) and Items Indicated to Receive Zinc-Rich Primer: SSPC-SP 6/NACE No. 3, "Commercial Blast Cleaning."
2. Interiors (SSPC Zone 1A): SSPC-SP 3, "Power Tool Cleaning."

Shop Priming: Apply shop primer to uncoated surfaces of metal fabrications, except those with galvanized finishes and those to be embedded in concrete, sprayed-on fireproofing, or masonry, unless otherwise indicated. Comply with SSPC-PA 1, "Paint Application Specification No. 1: Shop, Field, and Maintenance Painting of Steel," for shop painting.

1. Stripe paint corners, crevices, bolts, welds, and sharp edges.

Stainless-Steel Finishes

Remove tool and die marks and stretch lines or blend into finish.

Grind and polish surfaces to produce uniform, directionally textured, polished finish indicated, free of cross scratches. Run grain with long dimension of each piece.

Bright, Directional Satin Finish: No. 4.

When polishing is completed, passivate and rinse surfaces. Remove embedded foreign matter and leave surfaces chemically clean.

Aluminum Finishes

Finish designations prefixed by AA comply with the system established by the Aluminum Association for designating aluminum finishes.

As-Fabricated Finish: AA-M10 (Mechanical Finish: as fabricated, unspecified).

Class I, Clear Anodic Finish: AA-M12C22A41 (Mechanical Finish: nonspecular as fabricated; Chemical Finish: etched, medium matte; Anodic Coating: Architectural Class I, clear coating 0.018 mm or thicker) complying with AAMA 611.

Execution

Installation, General

Cutting, Fitting, and Placement: Perform cutting, drilling, and fitting required for installing metal fabrications. Set metal fabrications accurately in location, alignment, and elevation; with edges and surfaces level, plumb, true, and free of rack; and measured from established lines and levels.

Fit exposed connections accurately together to form hairline joints. Weld connections that are not to be left as exposed joints but cannot be shop welded because of shipping size limitations. Do not weld, cut, or abrade surfaces of exterior units that have been hot-dip galvanized after fabrication and are for bolted or screwed field connections.

Field Welding: Comply with the following requirements:

1. Use materials and methods that minimize distortion and develop strength and corrosion resistance of base metals.
2. Obtain fusion without undercut or overlap.
3. Remove welding flux immediately.
4. At exposed connections, finish exposed welds and surfaces smooth and blended so no roughness shows after finishing and contour of welded surface matches that of adjacent surface.

Fastening to In-Place Construction: Provide anchorage devices and fasteners where metal fabrications are required to be fastened to in-place construction. Provide threaded fasteners for use with concrete and masonry inserts, toggle bolts, through bolts, lag bolts, wood screws, and other connectors.

Provide temporary bracing or anchors in formwork for items that are to be built into concrete, masonry, or similar construction.

Corrosion Protection: Coat concealed surfaces of aluminum that will come into contact with grout, concrete, masonry, wood, or dissimilar metals with a heavy coat of bituminous paint.

Installing Miscellaneous Framing and Supports

General: Install framing and supports to comply with requirements of items being supported, including manufacturers' written instructions and requirements indicated on Shop Drawings.

Anchor supports for operable partitions securely to and rigidly brace from building structure.

Support steel girders on solid grouted masonry, concrete, or steel pipe columns. Secure girders with anchor bolts embedded in grouted masonry or concrete or with bolts through top plates of pipe columns.

1. Where grout space under bearing plates is indicated for girders supported on concrete or masonry, install as specified in "Installing Bearing and Leveling Plates" Article.

Install pipe columns on concrete footings with grouted baseplates. Position and grout column baseplates as specified in "Installing Bearing and Leveling Plates" Article.

1. Grout baseplates of columns supporting steel girders after girders are installed and leveled.

Installing Bearing and Leveling Plates

Clean concrete and masonry bearing surfaces of bond-reducing materials, and roughen to improve bond to surfaces. Clean bottom surface of plates.

Set bearing and leveling plates on wedges, shims, or leveling nuts. After bearing members have been positioned and plumbed, tighten anchor bolts. Do not remove wedges or shims but, if protruding, cut off flush with edge of bearing plate before packing with grout.

1. Use nonshrink grout, either metallic or nonmetallic, in concealed locations where not exposed to moisture; use nonshrink, nonmetallic grout in exposed locations, unless otherwise indicated.
2. Pack grout solidly between bearing surfaces and plates to ensure that no voids remain.

Installing Metal Bollards

Anchor bollards to existing construction with anchor bolts. Provide four 3/4-inch bolts at each bollard, unless otherwise indicated.

1. Embed anchor bolts at least 4 inches in concrete.

Anchor bollards in place with concrete footings. Center and align bollards in holes 3 inches above bottom of excavation. Place concrete and vibrate or tamp for consolidation. Support and brace bollards in position until concrete has cured.

Anchor internal sleeves for removable bollards in place with concrete footings. Center and align sleeves in holes 3 inches above bottom of excavation. Place concrete and vibrate or tamp for consolidation. Support and brace sleeves in position until concrete has cured.

Place removable bollards over internal sleeves and secure with 3/4-inch machine bolts and nuts. After tightening nuts, drill holes in bolts for inserting padlocks. Owner will furnish padlocks.

Fill bollards solidly with concrete, mounding top surface to shed water.

1. Do not fill removable bollards with concrete.

Installing Pipe Guards

Provide pipe guards at exposed vertical pipes in parking garage where not protected by curbs or other barriers. Install by bolting to wall or column with expansion anchors. Provide four 3/4- inch bolts at each pipe guard. Mount pipe guards with top edge 26 inches above driving surface.

Installing Nosings, Treads, and Thresholds

Center nosings on tread widths.

For nosings embedded in concrete steps or curbs, align nosings flush with riser faces and level with tread surfaces.

Seal thresholds exposed to exterior with elastomeric sealant complying with Division 07 Section "Joint Sealants" to provide a watertight installation.

Installing Cast-Iron Wheel Guards

Anchor wheel guards to concrete or masonry construction to comply with manufacturer's written instructions. Fill cores solidly with concrete.

Adjusting and Cleaning

Touchup Painting: Immediately after erection, clean field welds, bolted connections, and abraded areas. Paint uncoated and abraded areas with the same material as used for shop painting to comply with SSPC-PA 1 for touching up shop-painted surfaces.

1. Apply by brush or spray to provide a minimum 2.0-mil dry film thickness.

Touchup Painting: Cleaning and touchup painting of field welds, bolted connections, and abraded areas of shop paint are specified in Division 09 painting Sections.

Galvanized Surfaces: Clean field welds, bolted connections, and abraded areas and repair galvanizing to comply with ASTM A 780.

12-2.7 Rough Carpentry and Sheathing

General

Summary

This Section includes the following:

1. Wood blocking, cants and nailers.
2. Wood furring
3. Plywood sheathing.

Submittals

Product Data: For each type of process and factory-fabricated product.

1. Include data for wood-preservative and fire-retardant treatment from chemical treatment manufacturer and certification by treating plant that treated materials comply with requirements.

Research/Evaluation Reports: For the following, showing compliance with building code in effect for Project:

1. Wood-preservative-treated wood.
2. Fire-retardant-treated wood.
3. Power-driven fasteners.
4. Powder-actuated fasteners.
5. Expansion anchors.
6. Metal framing anchors.

Products

Wood Products, General

Lumber: DOC PS 20 and applicable rules of grading agencies indicated. If no grading agency is indicated, provide lumber that complies with the applicable rules of any rules-writing

agency certified by the ALSC Board of Review. Provide lumber graded by an agency certified by the ALSC Board of Review to inspect and grade lumber under the rules indicated.

1. Factory mark each piece of lumber with grade stamp of grading agency.
2. For exposed lumber indicated to receive a stained or natural finish, mark grade stamp on end or back of each piece.
3. Provide dressed lumber, S4S, unless otherwise indicated.

Provide Wood Products so that a minimum of 50% by cost of all permanently installed wood products are FSC Certified.

Wood-Preservative-Treated Lumber

Preservative Treatment by Pressure Process: AWPA C2, except that lumber that is not in contact with the ground and is continuously protected from liquid water may be treated according to AWPA C31 with inorganic boron (SBX)..

1. Preservative Chemicals: Acceptable to authorities having jurisdiction and containing no arsenic or chromium.

Kiln-dry lumber after treatment to a maximum moisture content of 19 percent.

Mark lumber with treatment quality mark of an inspection agency approved by the ALSC Board of Review.

Application: Treat all rough carpentry, unless otherwise indicated.

1. Wood sills, sleepers, blocking, furring, and similar concealed members.

Miscellaneous Lumber

General: Provide miscellaneous lumber indicated and lumber for support or attachment of other construction, including the following:

1. Blocking.
2. Nailers.
3. Furring.
4. Grounds.
5. Cants.
6. Grounds.
7. Rooftop parapets and curbs.

For concealed boards, provide lumber with 19 percent maximum moisture content and any of the following species and grades:

Plywood

Plywood at walls shall be ¾" thick Medium Density Overlay type, with Douglas Fir/hemlock construction, paint grade, with two working faces. It shall be constructed with exterior water-proof type glue, and meet APA PS 1-07 specifications.

Plywood at roof decks shall be Grade C, sanded both sides, with Structural 1 rating, with exterior water-proof type glue, and meet APA specifications.

Fasteners

General: Provide fasteners of size and type indicated that comply with requirements specified.

Bolts: Steel bolts complying with ASTM A 320, Grade B8 Class 1; with B8 hex nuts and washers.

Execution

Installation

Set rough carpentry to required levels and lines, with members plumb, true to line, cut, and fitted. Fit rough carpentry to other construction; scribe and cope as needed for accurate fit. Locate furring, nailers, blocking, grounds, and similar supports to comply with requirements for attaching other construction.

Metal Framing Anchors: Install metal framing to comply with manufacturer's written instructions.

Do not splice structural members between supports, unless otherwise indicated.

Comply with AWPA M4 for applying field treatment to cut surfaces of preservative-treated lumber.

Protection

Protect wood that has been treated with inorganic boron (SBX) from weather. If, despite protection, inorganic boron-treated wood becomes wet, apply EPA-registered borate treatment. Apply borate solution by spraying to comply with EPA-registered label.

12-2.8 Composite Wall Panels

General

Summary

Section includes metal-faced composite wall panels in a "rain-screen" assembly system.

Related Sections

Section 12-2.1 Selective Structure Demolition for removing existing cladding panels.

Section 12-2.7 Rough Carpentry and Sheathing for the plywood wall sheathing as part of the wall system.

Definition

Metal-Faced Composite Wall Panel Assembly: Metal-faced composite wall panels, attachment system components, miscellaneous metal framing, and accessories necessary for a complete "wet-seal" wall system.

Wet-Seal Wall System: The wet-seal principle is the exclusion of water and air-infiltration in a building envelope system by means of applying sealant across openings that allow the creep of water into the building interior.

Performance Requirements

General Performance: Metal-faced composite wall panel assemblies shall comply with performance requirements without failure due to defective manufacture, fabrication, installation, or other defects in construction.

Delegated Design: Design metal-faced composite wall panel assembly, including comprehensive Engineering analysis by a qualified professional Engineer, using performance requirements and design criteria indicated.

Structural Performance: Provide metal-faced composite wall panel assemblies capable of withstanding the effects of the following loads and stresses within limits and under conditions indicated, based on testing according to ASTM E 330:

1. Wind Loads: Determine loads based on the following minimum design wind pressures:
   a. Uniform pressure of 30 lbs/sq. ft., acting inward or outward.

Air Infiltration: Air leakage through assembly of not more than 0.06 cfm/sq. ft. of wall area when tested according to ASTM E 283 at the following test-pressure difference:

1. Test-Pressure Difference: 1.57 lbf/sq. ft.

Water Penetration under Static Pressure: No water penetration when tested according to ASTM E 331 at the following test-pressure difference:

1. Test-Pressure Difference: 6.24 lbf/sq. ft.

Water Penetration under Dynamic Pressure: No evidence of water leakage when tested according to AAMA 501.1 under dynamic pressure equal to 20 percent of inward-acting, wind- load design pressure of not less than 6.24 lbf/sq. ft. and not more than 12 lbf/sq. ft.

1. Water Leakage: As defined according to AAMA 501.1.

Water Leakage: Uncontrolled water infiltrating the system or appearing on systems normally exposed interior surfaces from sources other than condensation. Water controlled by flashing and gutters that is drained back to the exterior and cannot damage adjacent materials or finishes is not water leakage.

2. Deflection Limits: Metal-faced composite wall panel assemblies shall withstand wind loads with horizontal deflections no greater than 1/175 of the span anywhere in the panel.

Thermal Movements: Allow for thermal movements from ambient and surface temperature changes by preventing buckling, opening of joints, overstressing of components, failure of joint sealants, failure of connections, and other detrimental effects. Base calculations on surface temperatures of materials due to both solar heat gain and nighttime-sky heat loss.

1. Temperature Change (Range): 120 deg F, ambient; 180 deg , material surfaces.

Base design on the Wet-Seal Principle. Proper joinery and spacing to allow sealed joints to give a complete weathertight wall panel system.

Submittals

Product Data: For each type of product indicated. Include construction details, material descriptions, dimensions of individual components and profiles, and finishes for each type of metal-faced composite wall panel and accessory.

Shop Drawings: Show fabrication and installation layouts of metal-faced composite wall panels; details of edge conditions, joints, panel profiles, corners, anchorages, attachment system, trim, flashings, closures, and accessories; and special details. Distinguish among factory-, shop, and field-assembled work.

1. Accessories: Include details of the following items, at a scale of not less than 3” per 12 inches:
   a. Flashing and trim.
   b. Anchorage systems.
2. Include similar Samples of trim and accessories involving color selection.
3. Include manufacturer's color charts consisting of strips of cured sealants showing the full range of colors available for each sealant exposed to view.

Samples for Verification: For each type of exposed finish required, provide four samples each, prepared on samples of size indicated below:

1. Metal-Faced Composite Wall Panels: Three each, minimum 12 x 12 inches. Include fasteners, closures, and other metal-faced composite wall panel accessories.
   a. Composite Panels: Include four-way joint.
2. Trim and Closures: 12 inches long. Include fasteners and other exposed accessories.
3. Accessories: 12-inch- long Samples for each type of accessory.
4. Exposed Gaskets: 12 inches long.
5. Exposed Sealants: For each type and color of joint sealant required. Install joint sealants in 1/2-inch- wide joints formed between two 6-inch- long strips of material matching the appearance of metal-faced composite wall panels adjacent to joint sealants.

Delegated-Design Submittal: For metal-faced composite wall panel assembly indicated to comply with performance requirements and design criteria, including analysis data signed and sealed by the qualified professional Engineer in the State of California responsible for their preparation.

Coordination Drawings: Exterior elevations, drawn to scale, on which the following items are shown and coordinated with each other, using input from installers of the items involved:

1. Wall panels and attachments.
2. Girts and stud framing.
3. Wall-mounted items including EMS signs, CMS signs, doors, traffic lights, windows, louvers and lighting fixtures.
4. Penetrations of wall by pipes and utilities.

Qualification Data: For professional Engineer, testing agency, composite wall panel manufacturer and fabricator/installer.

Compatibility and Adhesion Test Reports: From sealant manufacturer, indicating the following:

1. Materials forming joint substrates and joint-sealant backings have been tested for compatibility and adhesion with joint sealants.
2. Interpretation of test results and written recommendations for primers and substrate preparation needed for adhesion.

Product Test Reports: Based on evaluation of comprehensive tests performed by a qualified testing agency, for each product.

Field quality-control reports.

Maintenance Data: For metal wall panels to include in maintenance manuals.

Warranties: Samples of special warranties.

Quality Assurance

Testing Agency Qualifications: Qualified according to ASTM E 329 for testing indicated.

Source Limitations: Obtain each type of metal-faced composite wall panel from single source from single manufacturer.

Mockups: Build mockups to verify selections made under sample submittals and to demonstrate aesthetic effects and set quality standards for fabrication and installation.

1. Build mockup of a typical wall outside corner panel, approximately one bay wide by full height by full thickness, including supports, attachments, and accessories.
   a. Include four-way joint for metal-faced composite wall panels.

2. Conduct water-spray test of mockup of metal-faced composite wall panel assembly, testing for water penetration according to AAMA 501.2.
3. Approval of mockups does not constitute approval of deviations from the Contract Documents contained in mockups unless Engineer specifically approves such deviations in writing.
4. Approved mockups may become part of the completed Work if undisturbed at time of Substantial Completion.

Preinstallation Conference: Conduct conference at Project site.

1. Meet with Owner, Engineer, Owner's insurer if applicable, testing and inspecting agency representative, metal-faced composite wall panel Installer, metal-faced composite wall panel manufacturer's representative, structural-support Installer, and installers but not limited to, whose work interfaces with or affects metal-faced composite wall panels including installers of doors, windows, and louvers.
2. Review and finalize construction schedule and verify availability of materials, Installer's personnel, equipment, and facilities needed to make progress and avoid delays.
3. Review methods and procedures related to metal-faced composite wall panel installation, including manufacturer's written instructions.
4. Examine support conditions for compliance with requirements, including alignment between and attachment to structural members.
5. Review flashings, special siding details, wall penetrations, openings, and condition of other construction that will affect metal-faced composite wall panels.
6. Review governing regulations and requirements for insurance, certificates, and tests and inspections if applicable.
7. Review temporary protection requirements for metal-faced composite wall panel assembly during and after installation.
8. Review wall panel observation and repair procedures after metal-faced composite wall panel installation.

Manufacturer Qualifications: Manufacturer shall have been engaged in the manufacture of composite panel material for a minimum of five (5) years.

Fabricator/Installer Qualifications: Fabricator and Installer shall be the same firm. Fabricator/Installer shall have been engaged in the fabrication and installation of composite panel material for a minimum of five (5) years and have completed a minimum of 3 projects of similar size, complexity and detail to this project. Fabricator/Installer shall be acceptable to the composite panel material Manufacturer. Fabricator/Installer shall have completed at least one successful project with the Manufacturer in the past five (5) years.

Delivery, Storage, and Handling

Deliver components, sheets, metal-faced composite wall panels, and other manufactured items so as not to be damaged or deformed. Package metal-faced composite wall panels for protection during transportation and handling.

Unload, store, and erect metal-faced composite wall panels in a manner to prevent bending, warping, twisting, and surface damage.

Store metal-faced composite wall panels vertically, covered with suitable weathertight and ventilated covering. Store metal-faced composite wall panels to ensure dryness, with positive slope for drainage of water. Do not store metal-faced composite wall panels in contact with other materials that might cause staining, denting, or other surface damage. Do not allow storage space to exceed 120 deg F.

Retain strippable protective covering on metal-faced composite wall panel for period of panel installation.

Project Conditions

Weather Limitations: Proceed with installation only when existing and forecasted weather conditions permit assembly of metal-faced composite wall panels to be performed according to manufacturer's written instructions and warranty requirements.

Field Measurements: Verify locations of structural members and wall opening dimensions by field measurements before metal-faced composite wall panel fabrication and indicate measurements on Shop Drawings.

Coordination

Coordinate metal-faced composite wall panel assemblies with flashing, trim, and construction of studs, and other adjoining work to provide a leakproof, secure, and noncorrosive installation.

Warranty

Special Warranty: Manufacturer's standard form in which manufacturer agrees to repair or replace components of metal-faced composite wall panel assemblies that fail in materials or workmanship within specified warranty period.

1. Failures include, but are not limited to, the following:
    a. Structural failures, including rupturing, cracking, or puncturing.
    b. Deterioration of metals and other materials beyond normal weathering.
2. Warranty Period: Two years from date of Substantial Completion.

Special Warranty on Panel Finishes: Manufacturer's standard form in which manufacturer agrees to repair finish or replace metal-faced composite wall panels that show evidence of deterioration of factory-applied finishes within specified warranty period.

1. Exposed Panel Finish: Deterioration includes, but is not limited to, the following:
   a. Color fading more than 5 Hunter units when tested according to ASTM D 2244.
   b. Chalking in excess of a No. 8 rating when tested according to ASTM D 4214.
   c. Cracking, checking, peeling, or failure of paint to adhere to bare metal.
2. Finish Warranty Period: 20 years from date of Substantial Completion.

Products

Panel Materials

Aluminum Sheet: Coil-coated sheet, ASTM B 209, alloy as standard with manufacturer, with temper as required to suit forming operations and structural performance required.

1. Surface: Smooth, flat finish.
2. Exposed Coil-Coated Finishes: FEVE Fluoropolymer: AAMA 620. 3-coat fluoropolymer finish containing 100 percent FEVE resin in color coat and a clear-coat finish. Prepare, pre-treat, and apply coating to exposed metal surfaces to comply with coating and resin manufacturers' written instructions.

Panel Sealants:

1. Joint Sealant: ASTM C 920; elastomeric polyurethane, polysulfide, or silicone sealant; of type, grade, class, and use classifications required to seal joints in metal-faced composite wall panels and remain weathertight; and as recommended in writing by panel manufacturer.
2. Color: Joint sealant shall match composite panel color.
3. Weather-Resistant Sheathing Paper: Asphalt impregnated kraft breathing paper, with high water resistance, to meet Federal Specification UU-B—790a, Type I, Grade D, Style 2.

Miscellaneous Materials

Aluminum Extrusions: ASTM B 221, alloy and temper recommended by manufacturer for type of use and finish indicated.

Fasteners: Stainless steel self-tapping screws, bolts, nuts, self-locking rivets and bolts, end-welded studs, and other suitable fasteners designed to withstand design loads. Provide exposed fasteners with heads matching color of metal-faced composite wall panels by means of plastic caps or factory- applied coating. Provide EPDM, PVC, or neoprene sealing washers.

Metal-Faced Composite Wall Panels

General: Provide factory-formed and -assembled, metal-faced composite wall panels fabricated from two metal facings bonded, using no glues or adhesives, to solid, extruded thermoplastic core; formed into profile for installation method indicated. Include attachment system components and accessories required for weathertight system.

1. Fire-Retardant Core: Noncombustible, with the following surface-burning characteristics as determined by testing identical products per ASTM E 84 by UL or another testing and inspecting agency acceptable to authorities having jurisdiction:

   a. Flame-Spread Index: 25 or less.
   b. Smoke-Developed Index: 450 or less.
2. Products: Subject to compliance with requirements, provide one of the following:
   a. Alcan Composites USA Inc.;Alucobond CM.
   b. Alcoa Inc.; Reynobond FR.
   c. Alpolic, Division of Mitsubishi Chemical America, Inc.; Alpolic ACM.
   d. Or Approved Equal.

Aluminum-Faced Composite Wall Panels: Formed with 0.020-inch- thick, anodized aluminum sheet facings.

1. Panel Thickness: 0.236 inch.
2. Core: Fire retardant.
3. Exterior Finish: fluoropolymer.
   a. Color: Two colors are required: Custom color to match existing on-site Administration Building and Engineer's samples, plus black.

Attachment System Components: Formed from extruded aluminum. Adjust components in subparagraph below to suit Project and to coordinate with installation method specified in Part 3.

1. Include manufacturer's standard perimeter extrusions with integral weather stripping, panel stiffeners, panel clips and anchor channels.

Accessories

Wall Panel Accessories: Provide components required for a complete metal-faced composite wall panel assembly including trim, copings, fasciae, mullions, sills, corner units, clips, flashings, sealants, gaskets, fillers, closure strips, and similar items. Match material and finish of metal-faced composite wall panels unless otherwise indicated.

Flashing and Trim: Formed from 0.018-inch- minimum thickness, aluminum-zinc alloy-coated steel sheet prepainted with coil coating. Provide flashing and trim as required to seal against weather and to provide finished appearance. Locations include, but are not limited to, bases, drips, sills, jambs, corners, endwalls, framed openings, rakes, fasciae, parapet caps, soffits, reveals, and fillers. Finish flashing and trim with same finish system as adjacent metal-faced composite wall panels.

Fabrication

General: Fabricate and finish metal-faced composite wall panels and accessories at the factory to greatest extent possible, by manufacturer's standard procedures and processes, as necessary to fulfill indicated performance requirements demonstrated by laboratory testing. Comply with indicated profiles and with dimensional and structural requirements.

Fabricate metal-faced composite wall panels in a manner that eliminates condensation on interior side of panel and with joints between panels designed to form weathertight seals.

Metal-Faced Composite Wall Panels: Factory form panels in a batch process by laminating each sheet using glues or adhesives between dissimilar materials. Trim and square edges of sheets with no displacement of face sheets or protrusion of core material.

1. Form panel lines, breaks, and angles to be sharp and true, with surfaces free from warp and buckle.
2. Fabricate panels with sharply cut edges, with no displacement of face sheets or protrusion of core material.
3. Fabricate panels with panel stiffeners, as required to comply with deflection limits, attached to back of panels with structural silicone sealant or bond tape.
4. Dimensional Tolerances:
   a. Panel Bow: 0.8 percent maximum of panel length or width.
   b. Squareness: 0.25 inch maximum.

Sheet Metal Accessories: Fabricate flashing and trim to comply with recommendations in SMACNA's "Architectural Sheet Metal Manual" that apply to design, dimensions, metal, and other characteristics of item indicated.

1. Form exposed sheet metal accessories that are without excessive oil canning, buckling, and tool marks and that are true to line and levels indicated, with exposed edges folded back to form hems.
2. Seams for Aluminum: Fabricate nonmoving seams with flat-lock seams. Form seams and seal with epoxy seam sealer. Rivet joints for additional strength.
3. Seams for Other Than Aluminum: Fabricate nonmoving seams in accessories with flat-lock seams. Tin edges to be seamed, form seams, and solder.
4. Sealed Joints: Form nonexpansion but movable joints in metal to accommodate elastomeric sealant to comply with SMACNA standards.
5. Conceal fasteners and expansion provisions where possible. Exposed fasteners are not allowed on faces of accessories exposed to view.
6. Fabricate cleats and attachment devices from same material as accessory being anchored or from compatible, noncorrosive metal recommended by metal-faced composite wall panel manufacturer.
   a. Size: As recommended by SMACNA's "Architectural Sheet Metal Manual" or metal-faced composite wall panel manufacturer for application, but not less than thickness of metal being secured.

General Finish Requirements

Comply with NAAMM's "Metal Finishes Manual for Architectural and Metal Products" for recommendations for applying and designating finishes.

Protect mechanical and painted finishes on exposed surfaces from damage by applying a strippable, temporary protective covering before shipping.

Appearance of Finished Work: Noticeable variations in same piece are not acceptable. Variations in appearance of abutting or adjacent pieces are acceptable if they are within one-half of the range of approved Samples. Variations in appearance of other components are acceptable if they are within the range of approved Samples and are assembled or installed to minimize contrast.

Execution

Examination

Examine substrates, areas, and conditions, with Installer present, for compliance with requirements for installation tolerances, metal-faced composite wall panel supports, and other conditions affecting performance of the Work.

Examine new and existing wall framing to verify that girts, angles, channels, studs, and other structural panel support members and anchorage have been installed within alignment tolerances required by metal-faced composite wall panel manufacturer.

Examine plywood wall sheathing to verify that sheathing joints are supported by framing or blocking and that installation is within flatness tolerances required by metal-faced composite wall panel manufacturer.

Verify that weather-resistant sheathing paper has been installed over sheathing or backing substrate to prevent air infiltration or water penetration.

Examine roughing-in for components and systems penetrating metal-faced composite wall panels to verify actual locations of penetrations relative to seam locations of panels before panel installation.

For the record, prepare written report, endorsed by Installer, listing conditions detrimental to performance of the Work.

Proceed with installation only after unsatisfactory conditions have been corrected.

Preparation

Miscellaneous Framing: Install subgirts, base angles, sills, furring, and other miscellaneous wall panel support members and anchorage according to ASTM C 754 and metal-faced composite wall panel manufacturer's written instructions.

Metal-Faced Composite Wall Panel Installation

General: Install metal-faced composite wall panels according to manufacturer's written instructions in orientation, sizes, and locations indicated on Drawings. Install panels perpendicular to girts and subgirts unless otherwise indicated. Anchor panels and other components of the Work securely in place, with provisions for thermal and structural movement.

Commence metal-faced composite wall panel installation and install minimum of 300 sq. ft. in presence of factory-authorized representative.

Shim or otherwise plumb substrates receiving metal-faced composite wall panels.

Flash and seal metal-faced composite wall panels at perimeter of all openings. Do not begin installation until weather barrier and flashings that will be concealed by panels are installed.

Install flashing and trim as metal-faced composite wall panel work proceeds.

Apply elastomeric sealant continuously between metal base channel (sill angle) and concrete, and elsewhere as indicated or, if not indicated, as necessary for waterproofing.

Provide weathertight escutcheons for pipe and conduit penetrating exterior walls.

Existing EMS (Electronic Message Signs): At the option of the Contractor, the existing EMS signs may be left substantially in place during the installation of the composite panels, The EMS signs shall be adjusted horizontally 1” +/- to be flush with the face of the composite panels.

Existing CMS (Changeable Message Signs): The three CMS signs shall be removed and stored during the installation of the composite panels. They shall be reinstalled flush with the face of the composite panels.

Traffic Lights: Red and green traffic lights at each lane must remain operable at all times. The Contractor shall propose a method whereby temporary lights supplement the existing traffic lights to meet this requirement.

Fasteners:

1. Aluminum Wall Panels: Use stainless-steel fasteners for surfaces exposed to the exterior and interior.

Metal Protection: Where dissimilar metals will contact each other or corrosive substrates, protect against galvanic action as recommended by metal-faced composite wall panel manufacturer.

Joint Sealers: Install gaskets, joint fillers, and sealants where indicated and where required for weathertight performance of metal-faced composite wall panel assemblies.

Provide types of gaskets, fillers, and sealants indicated or, if not indicated, types recommended by panel manufacturer.

1. Prepare joints and apply sealants to comply with requirements in Division 07 Section" Joint Sealants."

Attachment System Installation, General: Install attachment system required to support metal- faced composite wall panels and to provide a complete weathertight wall system, including subgirts, perimeter extrusions, tracks, drainage channels, panel clips, and anchor channels.

1. Include attachment to supports, panel-to-panel joinery, panel-to-dissimilar-material joinery, and panel-system joint seals.
2. Do not begin installation until weather barrier and flashings that will be concealed by composite panels are installed.

Accessory Installation

General: Install accessories with positive anchorage to building and weathertight mounting and provide for thermal expansion. Coordinate installation with flashings and other components.

1. Install components required for a complete metal-faced composite wall panel assembly including trim, copings, corners, seam covers, flashings, sealants, gaskets, fillers, closure strips, and similar items.

Flashing and Trim: Comply with performance requirements, manufacturer's written installation instructions, and SMACNA's "Architectural Sheet Metal Manual." Provide concealed fasteners where possible, and set units true to line and level as indicated. Install work with laps, joints, and seams that will be permanently watertight and weather resistant.

1. Install exposed flashing and trim that is without excessive oil canning, buckling, and tool marks and that is true to line and levels indicated, with exposed edges folded back to form hems. Install sheet metal flashing and trim to fit substrates and to result in waterproof and weather-resistant performance.
2. 2. Expansion Provisions: Provide for thermal expansion of exposed flashing and trim. Space movement joints at a maximum of 10 feet with no joints allowed within 24 inches of corner or intersection. Where lapped expansion provisions cannot be used or would not be sufficiently weather resistant and waterproof, form expansion joints of intermeshing hooked flanges, not less than 1 inch deep, filled with mastic sealant (concealed within joints).

Erection Tolerances

Installation Tolerances: Shim and align metal-faced composite wall panel units within installed tolerance of 1/4 inch in 20 feet, nonaccumulative, on level, plumb, and location lines as indicated and within 1/8-inch offset of adjoining faces and of alignment of matching profiles.

Field Quality Control

Testing Agency: Engage a qualified testing agency to perform tests and inspections.

Water Penetration: Test areas of installed system indicated on Drawings for compliance with system performance requirements according to ASTM E 1105 at minimum differential pressure of 20 percent of inward-acting, wind-load design pressure as defined by SEI/ASCE 7, but not less than 6.24 lbf/sq. ft.

Water-Spray Test: After completing the installation of 75-foot- by-full height minimum area of metal-faced composite wall panel assembly, test assembly for water penetration according to AAMA 501.2 in a 2-bay area directed by Engineer.

Manufacturer's Field Service: Engage a factory-authorized service representative to inspect, test, and adjust completed metal-faced composite wall panel installation, including accessories.

Metal-faced composite wall panels will be considered defective if they do not pass tests and inspections.

Additional tests and inspections, at Contractor's expense, will be performed to determine compliance of replaced or additional work with specified requirements.

Prepare test and inspection reports.

Cleaning

Remove temporary protective coverings and strippable films, if any, as metal-faced composite wall panels are installed unless otherwise indicated in manufacturer's written installation instructions. On completion of metal-faced composite wall panel installation, clean finished surfaces as recommended by panel manufacturer. Maintain in a clean condition during construction.

After metal-faced composite wall panel installation, clear weep holes and drainage channels of obstructions, dirt, and sealant.

Replace metal-faced composite wall panels that have been damaged or have deteriorated beyond successful repair by finish touchup or similar minor repair procedures.

12-2.9 Ethylene-Propylene-Diene-Monomer (Epdm) Roofing

General

Summary

This Section includes the following:

1. Adhered membrane roofing system.

2. Vapor retarder.
3. Roof insulation.

Definitions

Roofing Terminology: Refer to ASTM D 1079 and glossary of NRCA's "The NRCA Roofing and Waterproofing Manual" for definition of terms related to roofing work in this Section.

Design Uplift Pressure: The uplift pressure, calculated according to procedures in SPRI's "Wind Load Design Guide for Fully Adhered and Mechanically Fastened Roofing Systems," before multiplication by a safety factor.

Factored Design Uplift Pressure: The uplift pressure, calculated according to procedures in SPRI's "Wind Load Design Guide for Fully Adhered and Mechanically Fastened Roofing Systems," after multiplication by a safety factor.

Performance Requirements

General: Provide installed roofing membrane and base flashings that remain watertight; do not permit the passage of water; and resist specified uplift pressures, thermally induced movement, and exposure to weather without failure.

Material Compatibility: Provide roofing materials that are compatible with one another under conditions of service and application required, as demonstrated by roofing membrane manufacturer based on testing and field experience.

Roofing System Design: Provide a membrane roofing system that is identical to systems that have been successfully tested by a qualified testing and inspecting agency to resist uplift pressure calculated according to ASCE 7.

FMG Listing: Provide roofing membrane, base flashings, and component materials that comply with requirements in FMG 4450 and FMG 4470 as part of a membrane roofing system and that are listed in FMG's "Approval Guide" for Class 1 or noncombustible construction, as applicable. Identify materials with FMG markings.

1. Fire/Windstorm Classification: Class 1A- 90.
2. Hail Resistance: SH.

Solar Reflectance: Initial solar reflectance of not less than 0.70 when tested according to ASTM E903, and maintained, under normal conditions, solar reflectance of not less than 0.50 for 3 years after installation.

Minimum Emissivity Rating: Provide roofing materials with 0.90 or greater emissivity when tested according to ASTM E 408.

Cool Roof: Provide roofing materials that have been tested in accordance with ASTM C1549 for initial and aged solar reflectance and ASTM C1371 for initial and aged emittance and labeled by the Cool Roof Rating Council.

Solar Reflective Index: Provide roofing materials with a Solar Reflective Index of not less than 78 when tested in accordance with ASTM E 1980.

Submittals

Product Data: For each type of product indicated.

Shop Drawings: For roofing system. Include plans, elevations, sections, details, and attachments to other Work.

1. Base flashings and membrane terminations.
2. Tapered insulation, including slopes.
3. Insulation fastening patterns.

Samples for Verification: For the following products, submit three each of:

1. 12-by-12-inch square of sheet roofing, of color specified, including T-shaped side and end lap seam.
2. 12-by-12-inch square of roof insulation.
3. Six insulation fasteners of each type, length, and finish.

Installer Certificates: Signed by roofing system manufacturer certifying that Installer is approved, authorized, or licensed by manufacturer to install roofing system.

Manufacturer Certificates: Signed by roofing manufacturer certifying that roofing system complies with requirements specified in "Performance Requirements" Article.

1. Submit evidence of meeting performance requirements.

Qualification Data: For Installer and manufacturer.

Product Test Reports: Based on evaluation of comprehensive tests performed by manufacturer and witnessed by a qualified testing agency, for components of roofing system.

Research/Evaluation Reports: For components of membrane roofing system.

Maintenance Data: For roofing system to include in maintenance manuals.

Warranties: Special warranties specified in this Section.

Inspection Report: Copy of roofing system manufacturer's inspection report of completed roofing installation.

Quality Assurance

Installer Qualifications: A qualified firm certified to be approved, authorized, or licensed by roofing system manufacturer to install manufacturer's product and that is eligible to receive manufacturer's warranty.

Manufacturer Qualifications: A qualified manufacturer that has UL listing and FMG approval for membrane roofing system identical to that used for this Project.

Testing Agency Qualifications: An independent testing agency with the experience and capability to conduct the testing indicated, as documented according to ASTM E 548.

Source Limitations: Obtain components for membrane roofing system from same manufacturer as roofing membrane. All adjacent or overlapping materials shall be certified as compatible for use with other adjacent or overlapping materials.

Preliminary Roofing Conference: Before starting roof deck construction, conduct conference at Project site. Comply with requirements for preinstallation conferences in Division 01 Section "Project Meetings." Review methods and procedures related to roof deck construction and roofing system including, but not limited to, the following:

Preinstallation Conference: Conduct conference at Project site. Review methods and procedures related to roofing system including, but not limited to, the following:

1. Meet with BATA; Engineer; Owner's insurer if applicable; testing and inspecting agency representative; roofing Installer; roofing system manufacturer's representative; deck Installer; and installers whose work interfaces with or affects roofing, including installers of roof accessories and roof-mounted equipment.
2. Review methods and procedures related to roofing installation, including manufacturer's written instructions.
3. Review and finalize construction schedule and verify availability of materials, Installer's personnel, equipment, and facilities needed to make progress and avoid delays.
4. Examine deck substrate conditions and finishes for compliance with requirements, including flatness and fastening.
5. Review structural loading limitations of roof deck during and after roofing.
6. Review base flashings, special roofing details, roof drainage, roof penetrations, equipment curbs, and condition of other construction that will affect roofing system.
7. Review governing regulations and requirements for insurance and certificates if applicable.
8. Review temporary protection requirements for roofing system during and after installation.
9. Review roof observation and repair procedures after roofing installation.

Delivery, Storage, and Handling

Deliver roofing materials to Project site in original containers with seals unbroken and labeled with manufacturer's name, product brand name and type, date of manufacture, and directions for storing and mixing with other components.

Store liquid materials in their original undamaged containers in a clean, dry, protected location and within the temperature range required by roofing system manufacturer. Protect stored liquid material from direct sunlight.

1. Discard and legally dispose of liquid material that cannot be applied within its stated shelf life.

Protect roof insulation materials from physical damage and from deterioration by sunlight, moisture, soiling, and other sources. Store in a dry location. Comply with insulation manufacturer's written instructions for handling, storing, and protecting during installation.

Handle and store roofing materials and place equipment in a manner to avoid permanent deflection of deck.

Project Conditions

Weather Limitations: Proceed with installation only when existing and forecasted weather conditions permit roofing system to be installed according to manufacturer's written instructions and warranty requirements.

Warranty

Special Warranty: Manufacturer's standard form, without monetary limitation, in which manufacturer agrees to repair or replace components of membrane roofing system that fail in materials or workmanship within specified warranty period. Failure includes roof leaks.

1. Special warranty includes roofing membrane, base flashings, roofing accessories, roof insulation, fasteners, cover boards, substrate board, vapor retarder, roof pavers, walkway products and other components of membrane roofing system.
2. Warranty Period: 30 years from date of Substantial Completion.

Special Project Warranty: Submit roofing Installer's warranty, on warranty form at end of this Section, signed by Installer, covering Work of this Section, including all components of membrane roofing system such as roofing membrane, base flashing, roof insulation, fasteners, cover boards, substrate boards, vapor retarders, roof pavers, and walkway products, for the following warranty period:

1. Warranty Period: Two years from date of Substantial Completion.

Products

Manufacturers

Basis of Design Manufacturer: Carlisle-Syn Tec Sure-White EPDM Fully-Adhered System with a 30 year warranty, certified to comply with ENERGY STAR requirements.

EPDM Roofing Membrane

EPDM Roofing Membrane: ASTM D 4637, Type 1 uniform, flexible sheet made from EPDM, and as follows:

1. Manufacturers:
   a. Carlisle- Syn Tec Inc.
   b. Firestone Building Products Company.
   c. Johns Manville International, Inc.
   d. Or Acceptable Equal.
2. Thickness: 90 mils, nominal.
3. Exposed Face Color: White.
4. CRRC-Certified: Complies with LEED Credit Requirements
5. Meets ENERGY STAR guidelines

Auxiliary Materials

General: Auxiliary materials recommended by roofing system manufacturer for intended use and compatible with membrane roofing.

1. Liquid-type auxiliary materials shall meet VOC limits of authorities having jurisdiction or the limits established in Section 01 "Sustainable Design Requirements," whichever is more stringent.

Sheet Flashing: 90-mil- thick EPDM, cured, according to application.

Epichlorohydrin Sheet: 90-mil- thick, unreinforced flexible sheet with the following typical properties as determined per ASTM test method indicated:

1. Tensile Strength: 1500 psi; ASTM D 412.
2. Ultimate Elongation: 200 percent; ASTM D 412.
3. Tear Resistance: 150 lbf/in.; ASTM D 412.
4. Brittleness Temperature: Minus 20 deg F; ASTM D 746.
5. Resistance to Ozone Aging: No cracks after 168 hours' exposure of 50 percent elongated sample at 104 deg F and 100-pphm ozone; ASTM D 1149.
6. Resistance to Oil Aging: 15 percent maximum mass change after 168 hours' immersion in diesel fuel No. 2 at 158 deg F; ASTM D 471.

Bonding Adhesive:Manufacturer's standard bonding adhesive.VOC not to exceed 250 g/L.

1. Adhesive primer shall not have a VOC content exceeding 250 g/L.

Cold Fluid-Applied Membrane Adhesive: Manufacturer's standard cold fluid-applied bonding adhesive formulated to adhere fleece-backed roofing membrane to substrate. VOC not to exceed 250 g/L.

1. Adhesive primer shall not have a VOC content exceeding 250 g/L.

Seaming Material: Manufacturer's standard synthetic-rubber polymer primer and 3-inch-wide minimum, butyl splice tape with release film.

Lap Sealant: Manufacturer's standard single-component sealant, color to match roofing membrane. VOC content not to exceed 450 g/L.

1. Sealant primer shall not have a VOC content exceeding 750 g/L.

Water Cutoff Mastic: Manufacturer's standard butyl mastic sealant.

Fasteners: Factory-coated steel fasteners and metal or plastic plates meeting corrosion- resistance provisions in FMG 4470, designed for fastening membrane to substrate, and acceptable to membrane roofing system manufacturer.

Miscellaneous Accessories: Provide pourable sealers, preformed cone and vent sheet flashings, preformed inside and outside corner sheet flashings, T-joint covers, in-seam sealants, termination reglets, cover strips, and other accessories.

Vapor Retarder

Polyethylene Vapor Retarder: ASTM D 4397, 6 mils thick, minimum, with maximum permeance rating of 0.13 perm.

1. Adhesive: Manufacturer's standard lap adhesive, FMG approved for vapor-retarder application. VOC content not to exceed 250 g/L.

Roof Insulation

General: Provide preformed roof insulation boards that comply with requirements and referenced standards, selected from manufacturer's standard sizes and of thicknesses indicated.

Polyisocyanurate Board Insulation: ASTM C 1289, Type II, felt or glass-fiber mat facer on both major surfaces, minimum of 2 inches thick.

1. Manufacturers:
   a. Carlisle SynTec Incorporated.
   b. Firestone Building Products Company.
   c. Johns Manville International, Inc.
   d. Or Acceptable Equal.

Tapered Insulation: Provide factory-tapered insulation boards fabricated to slope of 1/4 inch per 12 inches , unless otherwise indicated.

Provide preformed saddles, crickets, tapered edge strips, and other insulation shapes where indicated for sloping to drain. Fabricate to slopes indicated.

Insulation Accessories

General: Furnish roof insulation accessories recommended by insulation manufacturer for intended use and compatible with membrane roofing.

Fasteners: Factory-coated steel fasteners and metal or plastic plates meeting corrosion- resistance provisions in FMG 4470, designed for fastening roof insulation to substrate, and acceptable to roofing system manufacturer.

Cold Fluid-Applied Adhesive: Manufacturer's standard cold fluid-applied adhesive formulated to adhere roof insulation to substrate.

Walkways

Flexible Walkways: Factory-formed, nonporous, heavy-duty, solid-rubber, slip-resisting, surface-textured walkway pads, approximately 3/16 inch thick, and acceptable to membrane roofing system manufacturer.

Execution

Examination

Examine substrates, areas, and conditions, with Installer present, for compliance with the following requirements and other conditions affecting performance of roofing system:

1. Verify that roof openings and penetrations are in place and set and braced and that roof drains are securely clamped in place.
2. Verify that wood blocking, curbs, and nailers are securely anchored to roof deck at penetrations and terminations and that nailers match thicknesses of insulation.
3. Proceed with installation only after unsatisfactory conditions have been corrected.

Preparation

Clean substrate of dust, debris, moisture, and other substances detrimental to roofing installation according to roofing system manufacturer's written instructions. Remove sharp projections.

Prevent materials from entering and clogging roof drains and conductors and from spilling or migrating onto surfaces of other construction. Remove roof-drain plugs when no work is taking place or when rain is forecast.

Complete terminations and base flashings and provide temporary seals to prevent water from entering completed sections of roofing system at the end of the workday or when rain is forecast. Remove and discard temporary seals before beginning work on adjoining roofing.

Vapor-Retarder Installation

Loosely lay polyethylene-film vapor retarder in a single layer over area to receive vapor retarder, side and end lapping each sheet a minimum of 2 inches and 6 inches, respectively.

1. Seal side and end laps with tape or adhesive.

Completely seal vapor retarder at terminations, obstructions, and penetrations to prevent air movement into membrane roofing system.

Insulation Installation

Coordinate installing membrane roofing system components so insulation is not exposed to precipitation or left exposed at the end of the workday.

Comply with membrane roofing system manufacturer's written instructions for installing roof insulation.

Install tapered insulation under area of roofing to conform to slopes indicated.

Install one or more layers of insulation under area of roofing to achieve required thickness. Where overall insulation thickness is 2 inches or greater, install 2 or more layers with joints of each succeeding layer staggered from joints of previous layer a minimum of 6 inches in each direction. Where two or more layers of insulation are required, layers other than the base layer shall be adhered.

Trim surface of insulation where necessary at roof drains so completed surface is flush and does not restrict flow of water.

Install insulation with long joints of insulation in a continuous straight line with end joints staggered between rows, abutting edges and ends between boards. Fill gaps exceeding 1/4 inch with insulation.

Cut and fit insulation within 1/4 inch of nailers, projections, and penetrations.

Adhered Insulation: Install each layer of insulation and adhere to substrate as follows:

Set each layer of insulation in a cold fluid-applied adhesive.

Install cover boards over insulation with long joints in continuous straight lines with end joints staggered between rows. Loosely butt cover boards together and fasten to roof deck.

1. Fasten insulation according to requirements in FMG's "Approval Guide" for specified Windstorm Resistance Classification.
2. Fasten insulation to resist uplift pressure at corners, perimeter, and field of roof.

Adhered Roofing Membrane Installation

Install roofing membrane over area to receive roofing according to membrane roofing system manufacturer's written instructions. Unroll roofing membrane and allow to relax before installing.

Start installation of roofing membrane in presence of membrane roofing system manufacturer's technical personnel.

Accurately align roofing membrane and maintain uniform side and end laps of minimum dimensions required by manufacturer. Stagger end laps.

Bonding Adhesive: Apply bonding adhesive to substrate and underside of roofing membrane at rate required by manufacturer and allow to partially dry before installing roofing membrane. Do not apply bonding adhesive to splice area of roofing membrane.

Cold Fluid-Applied Adhesive: Apply cold fluid-applied adhesive to substrate at rate required by manufacturer and install fleece-backed roofing membrane.

Mechanically or adhesively fasten roofing membrane securely at terminations, penetrations, and perimeter of roofing.

Apply roofing membrane with side laps shingled with slope of roof deck where possible.

Tape Seam Installation: Clean and prime both faces of splice areas, apply splice tape, and firmly roll side and end laps of overlapping roofing membranes according to manufacturer's written instructions to ensure a watertight seam installation. Apply lap sealant and seal exposed edges of roofing membrane terminations.

Repair tears, voids, and lapped seams in roofing that does not meet requirements.

Spread sealant or mastic bed over deck drain flange at deck drains and securely seal roofing membrane in place with clamping ring.

Base Flashing Installation

Install sheet flashings and preformed flashing accessories and adhere to substrates according to membrane roofing system manufacturer's written instructions.

Apply bonding adhesive to substrate and underside of sheet flashing at required rate and allow to partially dry. Do not apply bonding adhesive to seam area of flashing.

Flash penetrations and field-formed inside and outside corners with cured or uncured sheet flashing.

Clean splice areas, apply splicing cement, and firmly roll side and end laps of overlapping sheets to ensure a watertight seam installation. Apply lap sealant and seal exposed edges of sheet flashing terminations.

Terminate and seal top of sheet flashings and mechanically anchor to substrate through termination bars.

Field Quality Control

Testing Agency: Owner will engage a qualified independent testing and inspecting agency to perform roof tests and inspections and to prepare test reports.

Final Roof Inspection: Arrange for roofing system manufacturer's technical personnel to inspect roofing installation on completion and submit report to Architect.

1. Notify Engineer or BATA 48 hours in advance of date and time of inspection.

Repair or remove and replace components of membrane roofing system where test results or inspections indicate that they do not comply with specified requirements.

Additional testing and inspecting, at Contractor's expense, will be performed to determine compliance of replaced or additional work with specified requirements.

Protecting and Cleaning

Protect membrane roofing system from damage and wear during remainder of construction period. When remaining construction will not affect or endanger roofing, inspect roofing for deterioration and damage, describing its nature and extent in a written report, with copies to Architect and Owner.

Correct deficiencies in or remove membrane roofing system that does not comply with requirements, repair substrates and repair or reinstall membrane roofing system to a condition free of damage and deterioration at time of Substantial Completion and according to warranty requirements.

Clean overspray and spillage from adjacent construction using cleaning agents and procedures recommended by manufacturer of affected construction.

Roofing Installer's Warranty

WHEREAS <Insert name> of <Insert address>, herein called the "Roofing Installer," has performed roofing and associated work ("work") on the following project:

1. Owner: <Insert name of Owner.>
2. Address: <Insert address.>
3. Building Name/Type: <Insert information.>
4. Address: <Insert address.>
5. Area of Work: <Insert information.>
6. Acceptance Date: <Insert date.>
7. Warranty Period: <Insert time.>
8. Expiration Date: <Insert date.>

AND WHEREAS Roofing Installer has contracted (either directly with Owner or indirectly as a subcontractor) to warrant said work against leaks and faulty or defective materials and workmanship for designated Warranty Period,

NOW THEREFORE Roofing Installer hereby warrants, subject to terms and conditions herein set forth, that during Warranty Period he will, at his own cost and expense, make or cause to be made such repairs to or replacements of said work as are necessary to correct faulty and defective work and as are necessary to maintain said work in a watertight condition.

This Warranty is made subject to the following terms and conditions:

1. Specifically excluded from this Warranty are damages to work and other parts of the building, and to building contents, caused by:
   a. Lightning;
   b. Peak gust wind speed exceeding 110 mph;
   c. Fire;
   d. Failure of roofing system substrate, including cracking, settlement, excessive deflection, deterioration, and decomposition;
   e. Faulty construction of parapet walls, copings, chimneys, skylights, vents, equipment supports, and other edge conditions and penetrations of the work;
   f. Vapor condensation on bottom of roofing; and
   g. Activity on roofing by others, including construction Contractors, maintenance personnel, other persons, and animals, whether authorized or unauthorized by owner.

When work has been damaged by any of foregoing causes, Warranty shall be null and void until such damage has been repaired by Roofing Installer and until cost and expense thereof have been paid by Owner or by another responsible party so designated.

Roofing Installer is responsible for damage to work covered by this Warranty but is not liable for consequential damages to building or building contents resulting from leaks or faults or defects of work.

During Warranty Period, if Owner allows alteration of work by anyone other than Roofing Installer, including cutting, patching, and maintenance in connection with penetrations, attachment of other work, and positioning of anything on roof, this Warranty shall become null and void on date of said alterations, but only to the extent said alterations affect work covered by this Warranty. If Owner engages Roofing Installer to perform said alterations, Warranty shall not become null and void unless Roofing Installer, before starting said work, shall have notified Owner in writing, showing reasonable cause for claim, that said alterations would likely damage or deteriorate work, thereby reasonably justifying a limitation or termination of this Warranty.

During Warranty Period, if original use of roof is changed and it becomes used for, but was not originally specified for, a promenade, work deck, spray-cooled surface, flooded basin, or other use or service more severe than originally specified, this Warranty shall become null and void on date of said change, but only to the extent said change affects work covered by this Warranty.

Owner shall promptly notify Roofing Installer of observed, known, or suspected leaks, defects, or deterioration and shall afford reasonable opportunity for Roofing Installer to inspect work and to examine evidence of such leaks, defects, or deterioration.

This Warranty is recognized to be the only warranty of Roofing Installer on said work and shall not operate to restrict or cut off Owner from other remedies and resources lawfully available to Owner in cases of roofing failure. Specifically, this Warranty shall not operate to relieve Roofing Installer of responsibility for performance of original work according to requirements of the Contract Documents, regardless of whether Contract was a contract directly with Owner or a subcontract with Owner's General Contractor.

IN WITNESS THEREOF, this instrument has been duly executed this <Insert day> day of <Insert month>, <Insert year>.

1. Authorized Signature: <Insert signature.>
2. Name: <Insert name.>
3. Title: <Insert title.>

12-2.10 Roof Accessories

General

Summary

This Section includes the following:

1. Roof Hatches
2. Roof and Overflow Drains
3. Penetration Boots

Submittals

Product Data: For each type of roof accessory indicated.

Shop Drawings: Show fabrication and installation details for roof accessories.

Samples: For each type of exposed factory-applied color finish required and for each type of roof accessory indicated, prepared on Samples of size to adequately show color.

Quality Assurance

Sheet Metal Standard: Comply with SMACNA's "Architectural Sheet Metal Manual" details for fabrication of units, including flanges and cap flashing to coordinate with type of roofing indicated.

Products

Manufacturers

Manufacturers: Subject to compliance with requirements, provide products by one of the manufacturers listed in other Part 2 articles.

Metal Materials

Galvanized Steel Sheet: ASTM A 653/A 653M, G90 coated and mill phosphatized for field painting.

Prepainted, Metallic-Coated Steel Sheet: Steel sheet metallic coated by hot-dip process and prepainted by coil-coating process to comply with ASTM A 755/A 755M.

1. Galvanized Steel Sheet: ASTM A 653/A 653M, G90 coated.
2. Exposed Finishes: Manufacturer's standard 2-coat, thermocured system consisting of specially formulated inhibitive primer and fluoropolymer color topcoat containing not less than 70 percent polyvinylidene fluoride resin by weight.

Stainless-Steel Shapes or Sheet: ASTM A 240/A 240M or ASTM A 666, Type 304 or Type 316, No. 2D finish.

Roof Hatches

Roof Hatches: Fabricate roof hatches with insulated double-wall lids and insulated wall curb frame with integral deck mounting flange and lid frame counterflashing. Fabricate with welded or mechanically fastened and sealed corner joints. Provide continuous weathertight perimeter gasketing and equip with corrosion-resistant or hot-dip galvanized hardware. Provide white factory applied finish from standard manufacturer’s colors.

Available Manufacturers:
Bilco Company (The).
Milcor, Inc.
O’Keefe’s Inc.

Loads: Fabricate roof hatches to withstand 40-lbf/sq. ft. external and 20-lbf/sq. ft. internal loads.

Type and Size: Single-leaf lid, 30 by 54 inches.

Curb and Lid Material: Stainless-steel sheet, 0.078 inch thick.

Insulation: Polyisocyanurate board.

Interior Lid Liner: Manufacturer's standard metal liner of same material and finish as outer metal lid.

Exterior Curb Liner: Manufacturer's standard metal liner of same material and finish as metal curb.

Fabricate units to minimum height of 12 inches unless otherwise indicated.

Hardware: Stainless-steel spring latch with turn handles, butt-or pintle-type hinge system, and padlock hasps inside and outside.

Ladder Safety Post: Manufacturer's standard ladder safety post. Post to lock in place on full extension. Provide release mechanism to return post to closed position.

Safety Railing System: Manufacturer's standard complete system including rails, clamps, fasteners, safety barrier at railing opening, and all accessories required for a complete installation.

Conduit Boots

Conduit boots shall be gray EPDM with stainless steel clamp rings at conduit penetrations through the roof. Install EDPM roofing over boot flanges to form a watertight barrier.

Combination Drain/ Overflow Drain

Provide and install double drain receiver, 12” diameter cast iron, roof drain and overflow drain side by side, with double drain receiver requiring single deck penetration. Assembly shall have medium sumps, a combination non-puncturing clamp ring, and a gravel stop to ensure a watertight seal to EDPM roofing.

Execution

Installation

General: Install roof accessories according to manufacturer's written instructions. Anchor roof accessories securely in place and capable of resisting forces specified. Use fasteners, separators, sealants, and other miscellaneous items as required for completing roof accessory installation. Install roof accessories to resist exposure to weather without failing, rattling, leaking, and fastener disengagement.

Install roof accessories to fit substrates and to result in watertight performance.

Metal Protection: Where dissimilar metals will contact each other or corrosive substrates, protect against galvanic action by painting contact surfaces with bituminous coating or by other permanent separation as recommended by manufacturer.

1. Coat concealed side of roof accessories with bituminous coating where in contact with wood, ferrous metal, or cementitious construction.
2. Underlayment: Where installing exposed-to-view components of roof accessories directly on cementitious or wood substrates, install a course of felt underlayment and cover with a slip sheet, or install a course of polyethylene underlayment.
3. Bed flanges in thick coat of asphalt roofing cement where required by roof accessory manufacturers for waterproof performance.

Install roof accessories level, plumb, true to line and elevation, and without warping, jogs in alignment, excessive oil canning, buckling, or tool marks.

Seal joints with elastomeric sealant as required by manufacturer of roof accessories.

12-2.11 Hollow Metal Doors and Frames

General

Summary

A. Section Includes:

1. Custom hollow metal doors and frames.

B. Related Sections:

1. Section 12-2.7, Sheathing
2. Section 12-2.8, Composite Wall Panels
3. Section 12-2.12, Hardware
4. Section 12-2.13, Louvers
5. Section 12-2.14, Painting

Submittals

A. Product Data: For each type of product indicated.

B. Shop Drawings: Include elevations, door edge details, frame profiles, metal thicknesses, preparations for hardware, and other details.

C. Samples for Verification: For each type of exposed finish required.

D. Schedule: Prepared by or under the supervision of supplier, using same reference numbers for details and openings as those on Drawings.

Part 2 – Products

Manufacturers

Manufacturers: Subject to compliance with requirements, provide products by one of the following:

Benchmark; a division of Therma-Tru Corporation.
Curries Company; an Assa Abloy Group company.
Pioneer Industries, Inc.
Steelcraft; an Ingersoll-Rand company.

Materials

Metallic-Coated Steel Sheet: ASTM A 653/A 653M, Commercial Steel (CS), Type B; with minimum G60 (Z180) or A60 (ZF180) metallic coating.

Frame Anchors: ASTM A 591/A 591M, Commercial Steel (CS), 40Z (12G) coating designation; mill phosphatized.

1. For anchors built into exterior walls, steel sheet complying with ASTM A 1008/A 1008M or ASTM A 1011/A 1011M, hot-dip galvanized according to ASTM A 153/A 153M, Class B.

Inserts, Bolts, and Fasteners: Hot-dip galvanized according to ASTM A 153/A 153M.

Custom Hollow Metal Doors

General: Comply with ANSI/NAAM-HMMA 861.

Design: Flush panel

Core: Construction: Manufacturer’s standard kraft paper honeycomb, polystyrene, polyurethane, polyisocyanurate, mineral-board, or vertical steel-stiffener core.

Vertical Edges for Single-Acting Doors: Manufacturer's standard.

Top and Bottom Edges: Closed with flush or inverted 0.042-inch- (1.0-mm-) thick, end closures or channels of same material as face sheets.

Tolerances: ANSI/NAAM-HMMA 861, "Manufacturing Tolerances for Custom Steel Doors and Frames.”

Exterior Doors: Face sheets fabricated from metallic-coated steel sheet. Comply with ANSI/NAAM-HMMA for physical performance level:

1. Level 3 and Physical Performance Level A (Extra Heavy Duty).
   a. Hardware Reinforcement: ANSI/NAAM-HMMA 861.

Custom Hollow Metal Frames

General: Comply with ANSI/NAAM-HMMA 861.

Exterior Frames: Fabricated from metallic-coated steel sheet.

1. Fabricate frames with mitered or coped corners.
2. Fabricate frames as full profile welded unless otherwise indicated.
3. Frames for Level 3 Steel Doors: 0.0598-inch thick steel sheet.
   a. Hardware Reinforcement: ANSI/NAAM-HMMA 861.

Frame Anchors

Jamb Anchors

Stud-Wall Type: Designed to engage stud, welded to back of frames; not less than 0.042 inch thick.

Floor Anchors: Formed from same material as frames, not less than 0.042 inch (1.0 mm) thick, and as follows:

1. Monolithic Concrete Slabs: Clip-type anchors, with two holes to receive fasteners.

Fabrication

Tolerances: Fabricate hollow metal work to tolerances indicated in.

Hollow Metal Doors:

1. Exterior Doors: Provide weep-hole openings in bottom of exterior doors. Seal joints in top edges of doors against water penetration.

Hollow Metal Frames: Where frames are fabricated in sections, provide alignment plates or angles at each joint, fabricated of same thickness metal as frames.

1. Welded Frames: Weld flush face joints continuously; grind, fill, dress, and make smooth, flush, and invisible.
2. Provide countersunk, flat- or oval-head exposed screws and bolts for exposed fasteners unless otherwise indicated.
3. Floor Anchors: Weld anchors to bottom of jambs and mullions with at least four spot welds per anchor.
4. Jamb Anchors: Provide number and spacing of anchors as follows:
   a. Stud-Wall Type: Locate anchors not more than 18 inches from top and bottom of frame. Space anchors not more than 32 inches o.c. and as follows:
      1) Four anchors per jamb from 60 to 90 inches high.
      2) Five anchors per jamb from 90 to 96 inches high.
      3) Two anchors per head for frames more than 42 inches wide and mounted in metal-stud partitions.
         a) Compression Type: Not less than two anchors in each jamb.
5. Door Silencers: Except on weather-stripped doors, drill stops to receive door silencers.
   a. Single-Door Frames: Three door silencers.
   b. Double-Door Frames: Two door silencers.

Hardware Preparation: Factory prepare hollow metal work to receive templated mortised hardware according to the Door Hardware Schedule and templates furnished as specified in Division 08 Section "Door Hardware."

1. Locate hardware as indicated, or if not indicated, according to ANSI/NAAM-HMMA 861.
2. Reinforce doors and frames to receive nontemplated, mortised and surface-mounted door hardware.
3. Comply with applicable requirements in ANSI/NAAM-HMMA 861 specifications for preparation of custom hollow metal work for hardware.

Steel Finishes

Prime Finish: Apply manufacturer's standard primer immediately after cleaning and pretreating.

1. Shop Primer: ANSI/SDI A250.10.

Execution

Installation

Hollow Metal Frames: Comply with ANSI/NAAM-HMMA 861.

1. Set frames accurately in position, plumbed, aligned, and braced securely until permanent anchors are set. After wall construction is complete, remove temporary braces, leaving surfaces smooth and undamaged.
   a. Where frames are fabricated in sections because of shipping or handling limitations, field splice at approved locations by welding face joint continuously; grind, fill, dress, and make splice smooth, flush, and invisible on exposed faces.
   b. Remove temporary braces necessary for installation only after frames have been properly set and secured.
   c. Check plumbness, squareness, and twist of frames as walls are constructed. Shim as necessary to comply with installation tolerances.
2. Floor Anchors: Provide floor anchors for each jamb and mullion that extends to floor, and secure with postinstalled expansion anchors.
   a. Floor anchors may be set with powder-actuated fasteners instead of postinstalled expansion anchors if so indicated and approved on Shop Drawings.
3. Installation Tolerances: Adjust hollow metal door frames for squareness, alignment, twist, and plumb to the following tolerances:
   a. Squareness: Plus or minus 1/16 inch, measured at door rabbet on a line 90 degrees from jamb perpendicular to frame head.
   b. Alignment: Plus or minus 1/16 inch, measured at jambs on a horizontal line parallel to plane of wall.
   c. Twist: Plus or minus 1/16 inch, measured at opposite face corners of jambs on parallel lines, and perpendicular to plane of wall.
   d. Plumbness: Plus or minus 1/16 inch, measured at jambs at floor.

Hollow Metal Doors: Fit hollow metal doors accurately in frames, within clearances specified below. Shim as necessary.

1. Non-Fire-Rated Standard Steel Doors:
   a. Jambs and Head: 1/8 inch plus or minus 1/16 inch
   b. Between Edges of Pairs of Doors: 1/8 inch plus or minus 1/16 inch
   c. Between Bottom of Door and Top of Threshold: Maximum 3/8 inch.
   d. Between Bottom of Door and Top of Finish Floor (No Threshold): Maximum 3/4 inch.

Adjusting and Cleaning

Final Adjustments: Check and readjust operating hardware items immediately before final inspection. Leave work in complete and proper operating condition. Remove and replace defective work, including hollow metal work that is warped, bowed, or otherwise unacceptable.

Prime-Coat Touchup: Immediately after erection, sand smooth rusted or damaged areas of prime coat and apply touchup of compatible air-drying, rust-inhibitive primer.

Metallic-Coated Surfaces: Clean abraded areas and repair with galvanizing repair paint according to manufacturer's written instructions.

12-2.12 Door Hardware

General

Summary

This Section includes the following:

1. Commercial door hardware for the following:
   a. Swinging doors.

Related Sections include the following:

1. Division 08 Section "Hollow Metal Doors and Frames" for astragals provided as part of fire-rated labeled assemblies and for door silencers provided as part of hollow-metal frames.

Products furnished, but not installed, under this Section include the following. Coordinating, purchasing, delivering, and scheduling remain requirements of this Section.

Submittals

Product Data: Include construction and installation details, material descriptions, dimensions of individual components and profiles, and finishes.

Samples for Initial Selection: For each finish, color, and texture required for each type of door hardware indicated.

Samples for Verification: Submit minimum 2-by-4-inch plate Samples of each type of finish required, except primed finish.

Samples for Verification: For exposed door hardware of each type, in specified finish, full size. Tag with full description for coordination with the door hardware sets. Submit Samples before, or concurrent with, submission of the final door hardware sets.

1. Samples will be returned to Contractor. Units that are acceptable and remain undamaged through submittal, review, and field comparison process may, after final check of operation, be incorporated into the Work, within limitations of keying requirements.

Qualification Data: For Installer.

Product Test Reports: Based on evaluation of comprehensive tests performed by manufacturer and witnessed by a qualified testing agency, for locks, latches, delayed-egress locks, and closers.

Maintenance Data: For each type of door hardware to include in maintenance manuals. Include final hardware and keying schedule.

Warranty: Special warranty specified in this Section. I. Other Action Submittals:

1. Door Hardware Sets: Prepared by or under the supervision of Installer, detailing fabrication and assembly of door hardware, as well as procedures and diagrams. Coordinate the final door hardware sets with doors, frames, and related work to ensure proper size, thickness, hand, function, and finish of door hardware.
   a. Format: Use same scheduling sequence and format and use same door numbers as in the Contract Documents.
   b. Content: Include the following information:
      1) Identification number, location, hand, fire rating, and material of each door and frame.
      2) Type, style, function, size, quantity, and finish of each door hardware item. Include description and function of each lockset and exit device.
      3) Complete designations of every item required for each door or opening including name and manufacturer.
      4) Fastenings and other pertinent information.
      5) Location of each door hardware set, cross-referenced to Drawings, both on floor plans and in door and frame schedule.
      6) Explanation of abbreviations, symbols, and codes contained in schedule.
      7) Mounting locations for door hardware.
      8) Door and frame sizes and materials.
   c. Submittal Sequence: Submit the final door hardware sets at earliest possible date, particularly where approval of the door hardware sets must precede fabrication of other work that is critical in Project construction schedule. Include Product Data, Samples, Shop Drawings of other work affected by door hardware, and other information essential to the coordinated review of the door hardware sets.

d. Submittal Sequence: Submit initial draft of final schedule along with essential Product Data to facilitate the fabrication of other work that is critical in Project construction schedule. Submit the final door hardware sets after Samples, Product Data, coordination with Shop Drawings of other work, delivery schedules, and similar information has been completed and accepted.

2. Keying Schedule: Prepared by or under the supervision of Installer, detailing Owner's final keying instructions for locks. Include schematic keying diagram and index each key set to unique door designations.

Quality Assurance

Installer Qualifications: An employer of workers trained and approved by lock manufacturer.

1. Installer's responsibilities include supplying and installing door hardware and providing a qualified Architectural Hardware Consultant available during the course of the Work to consult with Contractor, Architect, and Owner about door hardware and keying.
2. Installer shall have warehousing facilities in Project's vicinity.
3. Scheduling Responsibility: Preparation of door hardware and keying schedules.
4. Engineering Responsibility: Preparation of data for electrified door hardware, including Shop Drawings, based on testing and Engineering analysis of manufacturer's standard units in assemblies similar to those indicated for this Project.

Architectural Hardware Consultant Qualifications: A person who is currently certified by DHI as an Architectural Hardware Consultant and who is experienced in providing consulting services for door hardware installations that are comparable in material, design, and extent to that indicated for this Project.

Source Limitations: Obtain each type and variety of door hardware from a single manufacturer, unless otherwise indicated.

1. Provide electrified door hardware from same manufacturer as mechanical door hardware, unless otherwise indicated. Manufacturers that perform electrical modifications and that are listed by a testing and inspecting agency acceptable to authorities having jurisdiction are acceptable.

Keying Conference: Conduct conference at Project site to comply with requirements in Division 01 Section "Project Meetings." In addition to Owner, Construction Manager, Contractor, and Engineer, conference participants shall also include Installer's Architectural Hardware Consultant and Owner's security consultant. Incorporate keying conference decisions into final keying schedule after reviewing door hardware keying system.

Preinstallation Conference: Conduct conference at Project site to comply with requirements in Division 01 Section "Project Meetings." Review methods and procedures related to electrified door hardware including, but not limited to, the following:

Delivery, Storage, and Handling

Inventory door hardware on receipt and provide secure lock-up for door hardware delivered to Project site.

Tag each item or package separately with identification related to the final door hardware sets, and include basic installation instructions, templates, and necessary fasteners with each item or package.

Deliver keys to manufacturer of key control system for subsequent delivery to Owner.

Coordination

Templates: Distribute door hardware templates for doors, frames, and other work specified to be factory prepared for installing door hardware. Check Shop Drawings of other work to confirm that adequate provisions are made for locating and installing door hardware to comply with indicated requirements.

Warranty

Special Warranty: Manufacturer's standard form in which manufacturer agrees to repair or replace components of door hardware that fail in materials or workmanship within specified warranty period.

1. Failures include, but are not limited to, the following:
   a. Structural failures including excessive deflection, cracking, or breakage.
   b. Faulty operation of operators and door hardware.
   c. Deterioration of metals, metal finishes, and other materials beyond normal weathering and use.
2. Warranty Period: Three years from date of Substantial Completion, except as follows:
   a. Electromagnetic, Delayed-Egress Locks: Five years from date of Substantial Completion.
   b. Exit Devices: Two years from date of Substantial Completion.
   c. Manual Closers: 10 years from date of Substantial Completion.
   d. Concealed Floor Closers: 10 years from date of Substantial Completion.

Maintenance Service

Maintenance Tools and Instructions: Furnish a complete set of specialized tools and maintenance instructions as needed for Owner's continued adjustment, maintenance, and removal and replacement of door hardware.

Products

Scheduled Door Hardware

General: Provide door hardware for each door to comply with requirements in this Section and door hardware sets indicated in door and frame schedule and door hardware sets indicated in Part 3 "Door Hardware Sets" Article.

1. Door Hardware Sets: Provide quantity, item, size, finish or color indicated, and named manufacturers' products.

Designations: Requirements for design, grade, function, finish, size, and other distinctive qualities of each type of door hardware are indicated in Part 3 "Door Hardware Sets" Article. Products are identified by using door hardware designations, as follows:

1. Named Manufacturers' Products: Manufacturer and product designation are listed for each door hardware type required for the purpose of establishing minimum requirements. Manufacturers' names are abbreviated in Part 3 "Door Hardware Sets" Article.

In other Part 2 articles where titles below introduce lists, the following requirements apply to product selection:

1. Manufacturers: Subject to compliance with requirements, provide products by the manufacturers specified.

Hinges, General

Quantity: Provide the following, unless otherwise indicated:

Template Requirements: Except for hinges and pivots to be installed entirely (both leaves) into wood doors and frames, provide only template-produced units.

Hinge Weight: Unless otherwise indicated, provide the following:

1. Gate Doors: Heavy-weight hinges.
2. Doors with Closers: Antifriction-bearing hinges.

Hinge Base Metal: Unless otherwise indicated, provide the following:

1. Exterior Hinges: Stainless steel, with stainless-steel pin.

Hinge Options: Where indicated in door hardware sets or on Drawings:

1. Nonremovable Pins: Provide set screw in hinge barrel that, when tightened into a groove in hinge pin, prevents removal of pin while door is closed; for outswinging exterior doors and outswinging corridor doors with locks.
2. Corners: 5/32-inch radius.

Fasteners: Comply with the following:

1. Machine Screws: For metal doors and frames. Install into drilled and tapped holes.
2. Screws: Phillips flat-head; machine screws (drilled and tapped holes) for metal doors. Finish screw heads to match surface of hinges.

Hinges

Butts and Hinges: BHMA A156.1.

Template Hinge Dimensions: BHMA A156.7.

Manufacturers:

1. Baldwin Hardware Corporation (BH).
2. Bommer Industries, Inc. (BI).
3. Cal-Royal Products, Inc. (CRP).
4. Hager Companies (HAG).
5. Lawrence Brothers, Inc. (LB).
6. McKinney Products Company; an ASSA ABLOY Group company (MCK).
7. Stanley Commercial Hardware; Div. of the Stanley Works (STH).

Locks and Latches, General

Accessibility Requirements: Where indicated to comply with accessibility requirements, comply with ICC/ANSI A117.1 and Chapter 11 of the California Building Code.

1. Provide operating devices that do not require tight grasping, pinching, or twisting of the wrist and that operate with a force of not more than 5 lbf.

Latches and Locks for Means of Egress Doors: Comply with the California Building Code. Latches shall not require more than 15 lbf to release the latch. Locks shall not require use of a key, tool, or special knowledge for operation.

Lock Trim:

1. Levers: Cast
2. Escutcheons (Roses): Wrought.
3. Dummy Trim: Match knob lock trim and escutcheons.
4. Lockset Designs: Provide design indicated on Drawings or, if sets are provided by another manufacturer, provide designs that match those designated.

Lock Throw: Comply with testing requirements for length of bolts required for labeled fire doors, and as follows:

1. Mortise Locks: Minimum 3/4-inch latchbolt throw.
2. Deadbolts: Minimum 1-inch bolt throw.

Backset: 2-3/4 inches, unless otherwise indicated.

1. Strikes for Mortise Locks and Latches: BHMA A 156.13.

Strikes: Manufacturer's standard strike with strike box for each latchbolt or lock bolt, with curved lip extended to protect frame, finished to match door hardware set, and as follows:

Door Bolts

Bolt Throw: Comply with testing requirements for length of bolts required for labeled fire doors, and as follows:

1. Mortise Flush Bolts: Minimum 3/4-inch throw.

Dustproof Strikes: BHMA A156.16, Grade 1.

Automatic and Self-Latching Flush Bolts: BHMA A156.3, Grade 1; designed for mortising into door edge.

1. Manufacturers:

    a. Cal-Royal Products, Inc. (CRP).
    b. Door Controls International (DCI).
    c. Glynn-Johnson; an Ingersoll-Rand Company (GJ).
    d. Hager Companies (HAG).
    e. IVES Hardware; an Ingersoll-Rand Company (IVS).
    f. Trimco (TBM).

Fire Exit Devices: Devices complying with NFPA 80 that are listed and labeled by a testing and inspecting agency acceptable to authorities having jurisdiction, for fire and panic protection, based on testing according to UL 305 and NFPA 252.

Removable Mullions: BHMA A156.3.

Lock Cylinders

Standard Lock Cylinders: BHMA A156.5, Grade 1. Listed under BHMA's Certified Product Directory.

Cylinders: Manufacturer's standard tumbler type, constructed from brass or bronze, stainless steel, or nickel silver, and complying with the following:

1. Number of Pins: Five pins minimum.
2. Mortise Type: Threaded cylinders with rings and straight- or clover-type cam.

Permanent Cores: Manufacturer's standard; finish face to match lockset; complying with the following:

1. Interchangeable Cores: Core insert, removable by use of a special key; usable with other manufacturers' cylinders.

Construction Keying: Comply with the following:

1. Construction Master Keys: Provide cylinders with feature that permits voiding of construction keys without cylinder removal. Provide 10 construction master keys.

2. Construction Cores: Provide construction cores that are replaceable by permanent cores. Provide 3 construction master keys.
   a. Replace construction cores with permanent cores as directed by Owner.
   b. Furnish permanent cores to Owner for installation.

   Manufacturer: Same manufacturer as for locks and latches.

Keying

Keying System: Factory registered, complying with guidelines in BHMA A156.28, Appendix A. Incorporate decisions made in keying conference, and as follows:

1. Master Key System: Cylinders are operated by a change key and a master key.
2. Keyed Alike: Key all cylinders to same change key.
   Keys: Nickel silver.
1. Stamping: Permanently inscribe each key with a visual key control number and include the following notation:
   a. Notation: "DO NOT DUPLICATE."
2. Quantity: In addition to one extra key blank for each lock, provide the following:
   a. Master Keys: Five.

   General: Use fail-secure electric strikes with fire-rated devices.

Operating Trim

Standard: BHMA A156.6 and as illustrated on Drawings.

Materials: Fabricate stainless steel, unless otherwise indicated.

Manufacturers:

1. Burns Manufacturing Incorporated (BM).
2. Don-Jo Mfg., Inc. (DJO).
3. Forms + Surfaces (FS).
4. Hager Companies (HAG).
5. Hiawatha, Inc. (HIA).
6. IVES Hardware; an Ingersoll-Rand Company (IVS).
7. Rockwood Manufacturing Company (RM).
8. Trimco (TBM).

Accessories For Pairs Of Doors

Carry-Open Bars: Provide carry-open bars for inactive leaves of pairs of doors unless automatic or self-latching bolts are used.

1. Material: Polished brass or bronze, with strike plate.

Closers

Accessibility Requirements: Where handles, pulls, latches, locks, and other operating devices are indicated to comply with accessibility requirements, comply with the ICC/ANSI A117.1 and Chapter 11 of the California Building Code.

Door Closers: Comply with the California Building Code. Door closers shall not require more than 30 lbf to set door in motion and not more than 15 lbf to open door to minimum required width.

Size of Units: Unless otherwise indicated, comply with manufacturer's written recommendations for size of door closers depending on size of door, exposure to weather, and anticipated frequency of use. Provide factory-sized closers, adjustable to meet field conditions and requirements for opening force.

Surface Closers: BHMA A156.4 Grade 1. Provide type of arm required for closer to be located on non-public side of door, unless otherwise indicated.

1. Manufacturers:
    a. Arrow USA; an ASSA ABLOY Group company (ARW).
    b. Corbin Russwin Architectural Hardware; an ASSA ABLOY Group company (CR).
    c. DORMA Architectural Hardware; Member of The DORMA Group North America (DAH).
    d. Dor-O-Matic; an Ingersoll-Rand Company (DOR).
    e. LCN Closers; an Ingersoll-Rand Company (LCN).
    f. Norton Door Controls; an ASSA ABLOY Group company (NDC).
    g. Rixson Specialty Door Controls; an ASSA ABLOY Group company (RIX).
    h. SARGENT Manufacturing Company; an ASSA ABLOY Group company (SGT).
    i. Yale Commercial Locks and Hardware; an ASSA ABLOY Group company(YAL).

Protective Trim Units

Size: 1-1/2 inches less than door width on push side and 1/2 inch less than door width on pull side, by height specified in door hardware sets.

Fasteners: Manufacturer's standard machine or self-tapping screws.

Metal Protective Trim Units: BHMA A156.6; beveled top and 2 sides; fabricated from the following material:

1. Material: 0.050-inch- thick stainless steel.
2. Manufacturers:
    a. American Floor Products Co., Inc. (AFP).
    b. Baldwin Hardware Corporation (BH).
    c. Burns Manufacturing Incorporated (BM).
    d. Don-Jo Mfg., Inc. (DJO).
    e. Hager Companies (HAG).
    f. Hiawatha, Inc. (HIA).
    g. IPC Door and Wall Protection Systems, Inc.; Div. of InPro Corporation (IPC).

h. IVES Hardware; an Ingersoll-Rand Company (IVS).
i. Pawling Corporation (PAW).
j. Rockwood Manufacturing Company (RM).
k. Trimco (TBM).

Stops and Holders

Combination Floor and Wall Stops and Holders: BHMA A156.8 Grade 1 and listed under the Certified Products Directory.

Silencers for Metal Door Frames: BHMA A156.16, Grade 1; neoprene or rubber, minimum diameter 1/2 inch; fabricated for drilled-in application to frame.

Manufacturers:
1. Architectural Builders Hardware Mfg., Inc. (ABH).
2. Baldwin Hardware Corporation (BH).
3. Burns Manufacturing Incorporated (BM).
4. Cal-Royal Products, Inc. (CRP).
5. Don-Jo Mfg., Inc. (DJO).
6. Door Controls International (DCI).
7. DORMA Architectural Hardware; Member of The DORMA Group North America (DAH).
8. Dor-O-Matic; an Ingersoll-Rand Company (DOR).
9. Glynn-Johnson; an Ingersoll-Rand Company (GJ).
10. Hager Companies (HAG).
11. HES, Inc.; an ASSA ABLOY Group company (HES).
12. Hiawatha, Inc. (HIA).
13. IVES Hardware; an Ingersoll-Rand Company (IVS).
14. Rixson Specialty Door Controls; an ASSA ABLOY Group company (RIX).
15. Rockwood Manufacturing Company (RM).
16. SARGENT Manufacturing Company; an ASSA ABLOY Group company (SGT).
17. Stanley Commercial Hardware; Div. of The Stanley Works (STH).
18. Trimco (TBM).

Door Gasketing

Standard: BHMA A156.22. Listed under Category J in BHMA's "Certified Product Directory."

General: Provide continuous weather-strip gasketing on exterior doors where indicated or scheduled. Provide noncorrosive fasteners for exterior applications and elsewhere as indicated.
1. Perimeter Gasketing: Apply to head and jamb, forming seal between door and frame.
2. Meeting Stile Gasketing: Fasten to meeting stiles, forming seal when doors are closed.
3. Door Bottoms: Apply to bottom of door, forming seal with threshold when door is closed.

Air Leakage: Not to exceed 0.50 cfm per foot of crack length for gasketing other than for smoke control, as tested according to ASTM E 283.

Smoke-Labeled Gasketing: Assemblies complying with NFPA 105 that are listed and labeled by a testing and inspecting agency acceptable to authorities having jurisdiction, for smoke- control ratings indicated, based on testing according to UL 1784.

1. Provide smoke-labeled gasketing on 20-minute-rated doors and on smoke-labeled doors.

Fire-Labeled Gasketing: Assemblies complying with NFPA 80 that are listed and labeled by a testing and inspecting agency acceptable to authorities having jurisdiction, for fire ratings indicated, based on testing according to NFPA 252.

1. Test Pressure: After 5 minutes into the test, neutral pressure level in furnace shall be established at 40 inches or less above the sill.

Sound-Rated Gasketing: Assemblies that are listed and labeled by a testing and inspecting agency, for sound ratings indicated, based on testing according to ASTM E 1408.

Replaceable Seal Strips: Provide only those units where resilient or flexible seal strips are easily replaceable and readily available from stocks maintained by manufacturer.

Gasketing Materials: ASTM D 2000 and AAMA 701/702.

Manufacturers:

1. Hager Companies (HAG).
2. M-D Building Products, Inc. (MD).
3. National Guard Products (NGP).
4. Pemko Manufacturing Co. (PEM).
5. Reese Enterprises (RE).
6. Sealeze; a unit of Jason Incorporated (SEL).
7. Zero International (ZRO).

Thresholds

Standard: BHMA A156.21. Listed under Category J in BHMA's "Certified Product Directory."

Accessibility Requirements: Where thresholds are indicated to comply with accessibility requirements, comply with ICC/ANSI A117.1 and Chapter 11 of the California Building Code.

1. Bevel raised thresholds with a slope of not more than 1:2.

Thresholds for Doors: Comply with the California Building Code. Maximum 1/2 inch high.

Manufacturers:

1. Hager Companies (HAG).
2. M-D Building Products, Inc. (MD).

3. National Guard Products (NGP).
4. Pemko Manufacturing Co. (PEM).
5. Reese Enterprises (RE).
6. Rixson Specialty Door Controls; an ASSA ABLOY Group company (RIX).
7. Sealeze; a unit of Jason Incorporated (SEL).
8. Zero International (ZRO).

Fabrication

Manufacturer's Nameplate: Do not provide products that have manufacturer's name or trade name displayed in a visible location except in conjunction with required fire-rated labels and as otherwise approved by Architect.

1. Manufacturer's identification is permitted on rim of lock cylinders only.

Base Metals: Produce door hardware units of base metal, fabricated by forming method indicated, using manufacturer's standard metal alloy, composition, temper, and hardness. Furnish metals of a quality equal to or greater than that of specified door hardware units and BHMA A156.18. Do not furnish manufacturer's standard materials or forming methods if different from specified standard.

Fasteners: Provide door hardware manufactured to comply with published templates generally prepared for machine, wood, and sheet metal screws. Provide screws according to commercially recognized industry standards for application intended, except aluminum fasteners are not permitted. Provide Phillips flat-head screws with finished heads to match surface of door hardware, unless otherwise indicated.

1. Concealed Fasteners: For door hardware units that are exposed when door is closed, except for units already specified with concealed fasteners. Do not use through bolts for installation where bolt head or nut on opposite face is exposed unless it is the only means of securely attaching the door hardware. Where through bolts are used on hollow door and frame construction, provide sleeves for each through bolt.
2. Steel Machine or Wood Screws:
   a. Mortise hinges to doors.
   b. Strike plates to frames.
   c. Closers to doors and frames.
3. Steel Through Bolts: For the following fire-rated applications unless door blocking is provided:
   a. Surface hinges to doors.
   b. Closers to doors and frames.
   c. Surface-mounted exit devices.
4. Spacers or Sex Bolts: For through bolting of hollow-metal doors.

Finishes

Standard: BHMA A156.18, as indicated in door hardware sets.

Protect mechanical finishes on exposed surfaces from damage by applying a strippable, temporary protective covering before shipping.

Appearance of Finished Work: Variations in appearance of abutting or adjacent pieces are acceptable if they are within one-half of the range of approved Samples. Noticeable variations in the same piece are not acceptable. Variations in appearance of other components are acceptable if they are within the range of approved Samples and are assembled or installed to minimize contrast.

Execution

Examination

Examine doors and frames, with Installer present, for compliance with requirements for installation tolerances, labeled fire door assembly construction, wall and floor construction, and other conditions affecting performance.

Proceed with installation only after unsatisfactory conditions have been corrected.

Preparation

Steel Doors and Frames: Comply with DHI A115 Series.

1. Surface-Applied Door Hardware: Drill and tap doors and frames according to ANSI A250.6.

Installation

Mounting Heights: Mount door hardware units at heights indicated on Drawings unless otherwise indicated or required to comply with governing regulations.

1. Standard Steel Doors and Frames: DHI's "Recommended Locations for Architectural Hardware for Standard Steel Doors and Frames."

Install each door hardware item to comply with manufacturer's written instructions. Where cutting and fitting are required to install door hardware onto or into surfaces that are later to be painted or finished in another way, coordinate removal, storage, and reinstallation of surface protective trim units with finishing work specified in Division 09 Sections. Do not install surface-mounted items until finishes have been completed on substrates involved.

1. Set units level, plumb, and true to line and location. Adjust and reinforce attachment substrates as necessary for proper installation and operation.
2. Drill and countersink units that are not factory prepared for anchorage fasteners. Space fasteners and anchors according to industry standards.

Key Control System: Tag keys and place them on markers and hooks in key control system cabinet, as determined by final keying schedule.

Thresholds: Set thresholds for exterior and acoustical doors in full bed of sealant complying with requirements specified in Division 07 Section "Joint Sealants."

Adjusting

Initial Adjustment: Adjust and check each operating item of door hardware and each door to ensure proper operation or function of every unit. Replace units that cannot be adjusted to operate as intended. Adjust door control devices to compensate for final operation of heating and ventilating equipment and to comply with referenced accessibility requirements.

Cleaning and Protection

Clean adjacent surfaces soiled by door hardware installation.

Clean operating items as necessary to restore proper function and finish.

Provide final protection and maintain conditions that ensure that door hardware is without damage or deterioration at time of Substantial Completion.

Door Hardware Sets

Notes: Provide Hager 307D Door Silencers for all Hollow Metal Framed Doors.

<u>Hardware Set No. 1 (i.e. Electrical Rooms, UPS Room, IT Room)</u>

1 ½ Pair Hinges Stanley – FBB168 x 4 ½ x 4 ½ x 630
1 Cylinder Lockset SGT 8245 Mortise Lockset
1 Mortise Cylinder SGT F1-170
1 Closer LCN – 4010N (4110N@ Dr 104) x 630
1 Wall Stop with hook Ives – 408 x 630

<u>Hardware Set No. 2 (i.e. Private Offices/Lockable Closets 2-Panel Doors with 1 stationary leaf)</u>

3 Pair Hinges Stanley – FBB168 x 4 ½ x 4 ½ x 630
1 Cylinder Lockset SGT T Zone Cylinder Lockset
1 Mortise Cylinder SGT Keso F-1 Cylinders
1 Pair Flush Bolts Ives – 458 ½ x 630
2 Wall Stops with hooks Ives – 408 x 630

<u>Hardware Set No. 3A (i.e. Electrical Rooms, UPS Room, IT Room)</u>

1 ½ Pair Hinges Stanley – FBB168 x 4 ½ x 4 ½ x 630
1 Cylinder Lockset SGT 8245 Mortise Lockset
1 Mortise Cylinder SGT F1-170
1 Closer LCN – 4010N (4110N@ Dr 104) x 630
1 Wall Stop Ives – 408 x 630
1 Kickplate Rockwood – 8” x 2” LDW x B4E x 630

1 Wall Stop	Ives – 408 x 630
2 Kickplates	Rockwood – 8" x 2" LDW x B4E x 630
1 Closers	LCN – 4010N x 630
1 Astragal	Pemko – 357SP

12-2.13 Louvers and Vents

General

Summary

Section Includes:

1. Fixed, extruded-aluminum louvers.

Definitions

Louver Terminology: Definitions of terms for metal louvers contained in AMCA 501 apply to this Section unless otherwise defined in this Section or in referenced standards.

Horizontal Louver: Louver with horizontal blades; i.e., the axes of the blades are horizontal.

Performance Requirements

Structural Performance: Louvers shall withstand the effects of gravity loads and the following loads and stresses within limits and under conditions indicated without permanent deformation of louver components, noise or metal fatigue caused by louver blade rattle or flutter, or permanent damage to fasteners and anchors. Wind pressures shall be considered to act normal to the face of the building.

1. Wind Loads: Determine loads based on a uniform pressure of 30 lbf/sq. ft., acting inward or outward.
2. Wind Loads: Determine loads based on pressures indicated below:
   a. Corner Zone: Within 5 feet of building corners, uniform pressure of 30 psf, acting inward, and 30 psf, acting outward.
   b. Other Than Corner Zone: Uniform pressure of 30 psf, acting inward, and 30 psf, acting outward.

Seismic Performance: Louvers, including attachments to other construction, shall withstand the effects of earthquake motions determined according to SEI/ASCE 7.

Thermal Movements: Allow for thermal movements from ambient and surface temperature changes, without buckling, opening of joints, overstressing of components, failure of connections, or other detrimental effects.

Temperature Change (Range): 120 deg F, ambient; 180 deg F, material surfaces.

Submittals

Product Data: For each type of product indicated.

Shop Drawings: For louvers and accessories. Include plans, elevations, sections, details, and attachments to other work. Show frame profiles and blade profiles, angles, and spacing.

1. Show weep paths, gaskets, flashing, sealant, and other means of preventing water intrusion.
2. Show mullion profiles and locations.

Samples for Initial Selection: For units with factory-applied color finishes.

Samples for Verification: For each type of metal finish required.

Product Test Reports: Based on evaluation of comprehensive tests performed according to AMCA 500-L by a qualified testing agency or by manufacturer and witnessed by a qualified testing agency, for each type of louver and showing compliance with performance requirements specified.

Quality Assurance

Source Limitations: Obtain louvers and vents from single source from a single manufacturer where indicated to be of same type, design, or factory-applied color finish.

Welding: Qualify procedures and personnel according to the following:

1. AWS D1.2/D1.2M, "Structural Welding Code - Aluminum."
2. AWS D1.3, "Structural Welding Code - Sheet Steel."
3. AWS D1.6, "Structural Welding Code - Stainless Steel."

SMACNA Standard: Comply with recommendations in SMACNA's "Architectural Sheet Metal Manual" for fabrication, construction details, and installation procedures.

Project Conditions

Field Measurements: Verify actual dimensions of openings by field measurements before fabrication.

Products

Materials

Aluminum Extrusions: ASTM B 221, Alloy 6063-T5, T-52, or T6.

Aluminum Sheet: ASTM B 209, Alloy 3003 or 5005 with temper as required for forming, or as otherwise recommended by metal producer for required finish.

Aluminum Castings: ASTM B 26/B 26M, Alloy 319.

Fasteners: Use types and sizes to suit unit installation conditions.

1. Use tamper-resistant screws for exposed fasteners unless otherwise indicated.
2. For fastening aluminum, use aluminum or 300 series stainless-steel fasteners.
3. For fastening stainless steel, use 300 series stainless-steel fasteners.
4. For color-finished louvers, use fasteners with heads that match color of louvers.

Fabrication, General

Assemble louvers in factory to accommodate invisible mullion type assembly. Disassemble units as necessary for shipping and handling limitations. Clearly mark units for reassembly and coordinated installation.

Maintain equal louver blade spacing, including separation between blades and frames at head and sill, to produce uniform appearance.

Fabricate frames, including integral sills, to fit in openings of sizes indicated, with allowances made for fabrication and installation tolerances, adjoining material tolerances, and perimeter sealant joints.

1. Frame Type: Channel, Exterior flange or Interior flange unless otherwise indicated.

Include supports, anchorages, and accessories required for complete assembly.

Provide vertical mullions of type and at spacings indicated, but not more than recommended by manufacturer, or 72 inches o.c., whichever is less.

1. Fully Recessed Mullions: Where indicated, provide mullions fully recessed behind louver blades. Where length of louver exceeds fabrication and handling limitations, fabricate with close-fitting blade splices designed to permit expansion and contraction.

Provide subsills made of same material as louvers or extended sills for recessed louvers.

Join frame members to each other and to fixed louver blades with fillet welds concealed from view unless otherwise indicated or size of louver assembly makes bolted connections between frame members necessary.

End Panels: Fabricate and install cover plates at corners of louver assemblies, as shown on the Drawings.

Fixed, Extruded-Aluminum Louvers

Horizontal Storm-Resistant Louver LV-1:

1. Basis-of-Design Product: Subject to compliance with requirements, Model A8860 by Construction Specialties or comparable product by one of the following:

    a. Air Balance Inc.; a Mestek company.
    b. Airolite Company, LLC (The).

   c. All-Lite Architectural Products.
   d. American Warming and Ventilating, Inc.; a Mestek company.
   e. Arrow United Industries; a division of Mestek, Inc.
   f. Ruskin Company; Tomkins PLC.
2. Louver Depth: 2 inches.
3. Frame and Blade Nominal Thickness: Not less than 0.060 inch for blades and 0.080 inch for frames.
4. Louver Performance Ratings:
   a. Free Area: Not less than 7.0 sq. ft. for 48-inch- wide by 48-inch- high louver.
   b. Air Performance: Not more than 0.10-inch wg static pressure drop at free-area exhaust velocity.
   c. Wind-Driven Rain Performance: Not less than 95 percent effectiveness when subjected to a rainfall rate of 3 inches per hour and a wind speed of 29 mph per hour and a wind speed of 50 mph at a core-area intake velocity of 300 fpm.
5. AMCA Seal: Mark units with AMCA Certified Ratings Seal.

Louver Screens

General: Provide insect screen at each exterior louver.
1. Screen Location for Fixed Louvers: Interior face.
2. Screening Type: Insect screening.

Secure screen frames to louver frames with stainless-steel machine screws, spaced a maximum of 6 inches from each corner and at 12 inches o.c.

Louver Screen Frames: Fabricate with mitered corners to louver sizes indicated.
1. Metal: Same kind and form of metal as indicated for louver to which screens are attached. Reinforce extruded-aluminum screen frames at corners with clips.
2. Finish: Same finish as louver frames to which louver screens are attached. .
3. Type: Rewirable frames with a driven spline or insert.

Louver Screening for Aluminum Louvers:
1. Insect Screening: Stainless steel, 18-by-18 mesh, 0.009-inch wire.

Aluminum Finishes

Finish louvers after assembly.

High-Performance Organic Finish: 4-coat fluoropolymer finish complying with AAMA 2605 and containing not less than 70 percent PVDF resin by weight in both color coat and clear topcoat. Prepare, pretreat, and apply coating to exposed metal surfaces to comply with coating and resin manufacturers' written instructions.

1. Color and Gloss: Black, semi-gloss.

Execution

Examination

Examine substrates and openings, with Installer present, for compliance with requirements for installation tolerances and other conditions affecting performance.

Proceed with installation only after unsatisfactory conditions have been corrected.

Preparation

Coordinate setting drawings, diagrams, templates, instructions, and directions for installation of anchorages that are to be embedded in concrete or masonry construction. Coordinate delivery of such items to Project site.

Installation

Locate and place louvers and vents level, plumb, and at indicated alignment with adjacent work.

Use concealed anchorages where possible. Provide brass or lead washers fitted to screws where required to protect metal surfaces and to make a weathertight connection.

Form closely fitted joints with exposed connections accurately located and secured.

Provide perimeter reveals and openings of uniform width for sealants and joint fillers, as indicated.

Repair finishes damaged by cutting, welding, soldering, and grinding. Restore finishes so no evidence remains of corrective work. Return items that cannot be refinished in the field to the factory, make required alterations, and refinish entire unit or provide new units.

Protect unpainted galvanized and nonferrous-metal surfaces that will be in contact with concrete, masonry, or dissimilar metals from corrosion and galvanic action by applying a heavy coating of bituminous paint or by separating surfaces with waterproof gaskets or nonmetallic flashing.

Install concealed gaskets, flashings, joint fillers, and insulation as louver installation progresses, where weathertight louver joints are required.

Adjusting And Cleaning

Clean exposed surfaces of louvers and vents that are not protected by temporary covering, to remove fingerprints and soil during construction period. Do not let soil accumulate during construction period.

Before final inspection, clean exposed surfaces with water and a mild soap or detergent not harmful to finishes. Thoroughly rinse surfaces and dry.

Restore louvers and vents damaged during installation and construction so no evidence remains of corrective work. If results of restoration are unsuccessful, as determined by Architect, remove damaged units and replace with new units.

1. Touch up minor abrasions in finishes with air-dried coating that matches color and gloss of, and is compatible with, factory-applied finish coating. VOC content shall not exceed 250 g/L.

12-2.14 Cutting and Patching

General

Summary

Work Included: Provide all necessary cutting and patching of the work as required to make materials and components fit together properly; or to uncover work in preparation for the installation of new work or inspection of previously installed work; or to remove and replace defective or non-conforming work.

Related Documents

1. Construction Drawings and other applicable provisions.

Definitions: Definitions in this Section do not change or modify the meaning of other terms used in the Contract documents.

Cutting and Patching - As used herein, the term is defined to include, but is not necessarily limited to, demolition and repair of nominally completed and previously existing work in order to accommodate the coordination, installation, and uncovering of work for access or inspection and to obtain samples for testing or similar purposes. It is further defined to include integral cutting and patching during manufacturing, fabricating, erecting, and installing processes for individual units of work. Drilling to install fasteners and similar operations is not considered cutting and patching.

Submittals

Proposals: Submit the following in accordance with requirements stated elsewhere in these Special Provisions.

1. Where prior review of cutting and patching is required, submit proposal well in advance of time work will be performed for BATA's designer's review and confirmation.
2. Include description of why cutting and patching cannot reasonably be avoided; how it will be performed; how structural elements, if any, will be affected and reinforced; products to be used; firms and tradespersons to perform work; approximate dates of work; and anticipated results in terms of variations from work as originally completed (structural, operational, visual and other qualities of significances).
3. Where applicable, include cost proposal, suggested alternatives to cutting and patching procedures proposed, and description of circumstances which led to the need for cutting and patching.
4. Review by BATA's designee prior to proceeding with proposed cutting and patching does not waive right to later require complete removal and replacement of work found to be cut and patched in an unsatisfactory manner.
5. Should conditions of work or schedule indicate a change of products from original installation, submit request for substitution.
6. Submit written notice to BATA's designee advising of the date and time work will be uncovered.

Quality Assurance

Requirements for Structural Work

1. Do not cut and patch operational elements or safety-related components in manner resulting in reduction of load-carrying capacity or load/deflection ratio.
2. Prior to cutting and patching structural steel, structural concrete, foundation construction, basement or retaining walls, curtain walls, pressurized piping, vessels, and equipment, submit proposed procedures for BATA designee's review.

Operational and Safety Limitations

1. Do not cut and patch operational elements or safety-related components in manner resulting in reduction of capacities to perform as intended or resulting in decreased operational life, increased maintenance or decreased safety.
2. Prior to cutting and patching primary operational systems and equipment, submit proposed procedures and materials for BATA designee's review for the treatment of water, moisture, vapor, air, or smoke barriers; membranes and flashings; noise and vibration control elements and systems; control, communication, conveying, and electrical wiring systems; and similar categories.

Visual Requirements

1. Do not cut and patch work which is exposed on the exterior or in occupied spaces of the building in a manner resulting in reduction of visual qualities or substantial evidence of the cut and patch work, both as judged by BATA's designee.
2. Remove and replace work judged by BATA's designee to be cut and patched in a visually unsatisfactory manner.

Installer/Fabricator: Engage original installer or fabricator to perform cutting and patching of trees, shrubs, masonry, roofing, curtain wall or storefront systems, exterior insulation and finish systems, acoustical ceilings, carpeting, wall covering, etc. Where original installer or fabricator is not available, engage recognized expert entities to perform cut-and-patch work.

Products

Patching Material

Except as otherwise indicated, provide materials for cutting and patching which will result in equal or better work than the work being cut and patched in terms of performance characteristics and including visual effect where applicable. Comply with requirements and use materials identical with original materials where feasible and where recognized that satisfactory results can be produced.

Execution

Examination

Inspect existing conditions of area of work to be performed under this Section including elements subject to damage or to movement during cutting and patching.

After uncovering work, inspect conditions affecting installation of products, or performance of work.

Report unsatisfactory or questionable conditions to BATA's designee in writing; do not proceed with work until BATA's designee has provided further instructions.

Preparation

Temporary Support: Provide adequate temporary shoring, bracing, or other means of support for work to be cut to prevent failure. Do not endanger other work.

Protection: Provide adequate protection of other work during cutting and patching to prevent damage and provide protection of work from adverse weather exposure. Provide fire suppression equipment as applicable.

Cutting and Patching:

General: Employ skilled tradesmen to perform cutting and patching. Except as otherwise indicated, proceed with cutting and patching at earliest feasible time in each instance, and perform work promptly.

Cutting:

1. Cut work by methods least likely to damage work to be retained and adjoining work.
2. Review proposed procedure with original installer where possible, and comply with his recommendations.
3. In general, where physical cutting action is required, cut work with sawing and grinding tools, not with hammering and chopping tools. Openings through concrete shall be core drilled.

Patching: Patch with seams which are durable and as invisible as possible. Comply with specified tolerance for the work. Where feasible, inspect and test patched areas to demonstrate integrity of work.

Restoring:

1. Restore exposed finishes of patched areas. Where necessary, extend finish restoration onto retained adjoining work in a manner which will eliminate evidence of patching.
2. Where patch occurs in painted surfaces, extend final paint cover over entire unbroken surface containing patch after the patched area has received prime and base coats.

12-2.15 Field Engineering

General

Summary

Work Included: This Section includes administrative and procedural requirements for field Engineering services including, but not limited to the following:

Quality Assurance

Engineer Qualifications: Engage an Engineer of the discipline required, licensed in the State of California to perform required Engineering of the Quality Control Plan.

Part 2 - Products (Not Used)

Part 3 - Execution

Quality Control Plan

The Contractor shall submit a Quality Control Plan for approval by the Engineer for a system for layout, control, and checking the trueness of the Canopy work to the standard of trueness of the existing Canopy.

Layout of Work

BATA has set a baseline and benchmark for the area of work. This is shown on the Contract Documents. The Contractor shall lay out the work accurately measuring from these controls. Work improperly located due to Contractor's errors or omissions shall be corrected by the Contractor at no additional expense to BATA.

The Contractor shall immediately notify the Engineer of apparent errors discovered on the drawings or in the initial stakeout. If changes in stakeout are required, the Contractor shall cooperate with BATA and promptly establish field control for altered or adjusted work.

SECTION 13 SIGNALS, LIGHTING AND ELECTRICAL SYSTEMS

13-1 Description

The following work shall conform to the details shown on the plans and the provisions in Section 86, "Signals, Lighting and Electrical Systems," of the Standard Specifications and these Special Provisions as directed by the Engineer.

1. Changeable Message Sign (CMS) Disconnection and Re-connection
   a. Turn off, lock out, and tag out all associated power breakers, disconnect, coil, and protect all cables
   b. Re-connect and turn back on existing Changeable Message Sign (CMS) #1, #2, and #3 on the toll canopy
   c. Conduct functional testing on all circuits
2. Overhead Traffic Lights and Extinguishable Message Sign (EMS) Disconnection and Re-connection
   a. Turn off, lock out, and tag out all associated power breakers on multiple panels at various locations, and then disconnect circuits
   b. Install new conduits and pull new cables to re-connect traffic lights and EMS, and then turn back on the existing overhead traffic lights and Extinguishable Message Sign (EMS) on the toll canopy
   c. Provide temporary overhead traffic lights during construction.
   d. Bond together all electrical system.
   e. Conduct functional testing on all circuits
3. Toll Plaza Canopy LED Linear Floodlight work shall include the following:
   a. Install lighting fixtures as shown on the electrical and architectural plans, and per the manufacturer's guidelines.
   b. Complete lighting assemblies, with features, options, accessories, controls, and all associated electrical devices and components required, and wire for an operational lighting system.
   c. Install conduits, pull and junction boxes, bare copper bonding, anchors, fittings, and supports required for lighting system power and control.
   d. Install and terminate conductors and cables per electrical design.
   e. Tie-into existing spare circuit breaker on existing panelboard PNL-CMS/LIGHTING for lighting power source. Provide new updated type-written panel schedule laminated on panelboard door interior.
   f. Install and complete testing of photocell light on the canopy.
   g. Conduct functional and aesthetic testing on lighting for the Engineer.
4. Pump Station Building electrical work shall include the following:
   a. Install lighting fixtures as shown on the electrical plans.
   b. Install light switches and GFCI receptacles, with weatherproof cover as indicated on plans.
   c. Connect to circuit breakers on building distribution panelboard for power and lighting. Provide updated type-written panel schedule laminated on panelboard door interior.
   d. Install conduits, pull and junction boxes, bare copper bonding, anchors, fittings, and supports required for lighting and power systems.
   e. Install panel with main feeder breaker and disconnects that match existing ratings for pumps, subject to the Engineer's approval.

f. Install main incoming service with feeder and distribution panel with main feeder breaker for the new pump station building, subject to the Engineer's approval.
g. Install new conduits and pull new cables for pump feeders. Reconnect and re-energize pumps after pump station building construction is completed.
h. Install copper grounding system
i. Conduct functional testing on all circuits

13-2 Abbreviations

The following abbreviations are added to those listed in Section 1-3.01, "Abbreviations," of the Standard Specifications:

CEC	California Electrical Code
CSA	Canadian Standards Association
ESO	Electrical Safety Orders of the Division of Industrial Relations, State of California
GFCI	Ground Fault Current Interrupter
ICEA	Insulated Cable Engineering Association
IEC	International Electrotechnical Commission
ISO	International Organization for Standardization
IS/OS	Individual Shield/Overall Shield
JEDEC	Joint Electron Device Engineering Council
NEC	National Electrical Code
NECA	Standards for Construction
NEMA	National Electrical Manufacturers Association
NESC	National Electrical Safety Code
NETA	International Electrical Testing Association Inc.
NO	Normally Open
NC	Normally Closed
NFPA	National Fire Protection Association
OSHA	Occupational Safety and Health Administration
CEC	California Electrical Code
PVC	Polyvinyl Chloride
REA	Rural Electrification Administration
CMS	Changeable Message Sign
EMS	Extinguishable Message Sign
UL	Underwriters Laboratories
XLPE	Cross Linked Polyethylene

13-3 Cost Break-Down

Cost break-downs shall conform to the provisions in Section 86-1.03, "Cost Break-Down," of the Standard Specifications and these Special Provisions.

The Engineer shall be furnished a cost break-down for each contract lump sum item of work described in this Section 13.

The cost break-down shall be submitted to the Engineer for approval within 15 days after the contract has been approved. The cost break-down shall be approved, in writing, by the Engineer before any partial payment for the items of electrical work will be made.

The cost break-down shall be divided into the following categories. Within each category, each item of work shall be broken down, at a minimum, to include the following listed items in addition to those listed in the Standard Specifications:

1. Overhead Traffic light, CMS, and EMS reconnections shall include, but not be limited to the following additional items of the cost break-down:
   a. Temporary Overhead Traffic Lights – list size and type.
   b. Cable – list each size and type.
   c. Termination and splice - list each size and type.
   d. Conduits, conduit anchors, fittings and supports – list each size and type.
   e. Pull boxes and junction boxes – list each size and type.
   f. Equipment required for functional testing – list size and type.
   g. Equipment rental - list each over $500.00 – list size and type.
   h. Electrical hardware – list size and type.
   i. Mounting rack – list components and fabrication method.
   j. Grounding System – list size and type.
2. Toll Plaza Canopy LED Floodlight installation is shown on the plans, and shall include, but not be limited to the following additional items of the cost break-down:
   a. Lighting fixtures – list size and type
   b. Cable – list each size and type.
   c. Termination and splice - list each size and type.
   d. Conduits, conduit anchors, fittings and supports – list each size and type.
   e. Pull boxes and junction boxes – list each size and type.
   f. Equipment required for functional testing – list size and type.
   g. Equipment rental - list each over $500.00 – list size and type.
   h. Electrical hardware – list size and type.
   i. Mounting rack – list components and fabrication method.
   j. Grounding System – list size and type
3. Pump Station Building electrical installation is shown on the plans, described in these provisions, and shall include, but is not limited to the following additional items of the cost break-down:
   1. Cable – list each size and type.
   2. Termination and splice - list each size and type.
   3. Conduits, conduit anchors, fittings and supports – list each size and type.

4. Pull and junction boxes – list each size and type.
5. Receptacles – list size and type.
6. Light Switches – list size and type.
7. Indoor and outdoor lighting – list size and type.
8. Electrical Panels and disconnect switches – list size and type.
9. Equipment required for functional testing – list size and type.
10. Equipment rental - list each over $500.00 – list size and type.
11. Electrical hardware – list size and type.
12. Mounting rack – list components and fabrication method.
13. Grounding System – list size and type.

13-4 Maintaining Existing Electrical Systems

Comply with Section 86-1.06, "Maintaining Existing and Temporary Electrical Systems," of the Standard Specifications.

Before commencing the work, the Contractor shall submit in writing to the Engineer a description and detailed schedule of the intended operations relative to keeping the existing electrical and traffic operations system in continuous operation. Such schedule shall be part of the progress schedule.

Regardless of construction procedure, methods and equipment selected, the Contractor shall have all materials and equipment on the site for the installation of the electrical system. Temporary disconnection of power will be required to accommodate for the construction of the new pump station building. The Contractor shall obtain written approval from the Engineer, at least one week before interrupting existing operation of the pump station. The Contractor shall notify the Engineer at least 72 hours before starting excavation activities.

Full compensation for temporary facilities shall be considered as included in the contract lump sum prices paid for the various contract items of work involved and no additional compensation will be allowed therefore.

Payment

The contract lump sum price paid for maintaining existing electrical system elements during construction shall include full compensation for furnishing all labor, materials, tools, equipment and incidentals, and for doing all the work involved in maintaining existing electrical system elements as shown on the plans, specified in the Standard specifications and these Special Provisions, and as directed by the Engineer.

Furnishing and installing temporary supports for electrical equipment that are not shown on the plans, but are required to maintain the equipment, will be paid for as extra work as provided in Section 4-l.03D, "Extra Work," of the Standard Specifications.

If the Contractor is required to submit provisions for the replacement of existing electrical equipment that were not identified, the provisions will be paid for as extra work as provided in Section 4-l.03D, "Extra Work," of the Standard Specifications.

13-5 Construction Responsibility

The Contractor shall provide all materials required for splicing and termination of cables.

All power, control and communication splices and terminations shall be made by the Contractor. The Contractor shall provide the splice kits and terminate all connections. The Contractor shall perform complete cable test on all circuits.

The Contractor shall perform the final acceptance tests of each termination and splice in accordance with latest applicable ICEA, International Electrical Testing Association Inc. (NETA) and IEEE standards.

13-6 Conduit

Type 1 conduit shall be used throughout. Minimum size of conduit shall be ¾ inch.

Conduit sizes shown on the plans and specified in the Standard Specifications and these Special Provisions are referenced to metallic type conduit.

Size Designation for Metallic Type Conduit
¾
1
1.5
2
2.5
3
4

When a standard coupling cannot be used for joining Type 1 conduit, a UL listed threaded union coupling conforming to the provisions in Section 86-2.05C, "Installation," of the Standard Specifications, or a concrete-tight split coupling, or concrete-tight set screw coupling shall be used.

Pull ropes for use when installing cables in conduit shall consist of flat, woven, lubricated, soft-fiber polyester tape with a minimum tensile strength of 1800 lb-f and shall have printed sequential measurement markings at least every meter.

The Contractor shall support and secure all conduits at intervals not to exceed 4 feet.

Immediately after conduits or conductors have been installed, the ends of conduits terminating in pull boxes, service equipment enclosures, and controller cabinets shall be sealed with an approved type of sealing compound.

The Contractor shall install equipment grounding conductor in every conduit. Refer to "Bonding and Grounding" Section.

Rigid Hot-Dip Galvanized Steel Conduit, Threaded Couplings, Elbows, and Conduit Bodies

The rigid galvanized steel (RGS) conduit, threaded couplings, elbows, and conduit bodies shall conform to Section 86-2.05, "Conduit," of the Standard Specifications for Type 1 where shown on the plans.

Polyvinyl Chloride Coated Rigid Hot-Dip Galvanized Steel Conduit, Threaded Couplings, and Elbows

The polyvinyl chloride (PVC) coated rigid galvanized steel (RGS) conduit, threaded couplings, and elbows shall conform to Section 86-2.05, "Conduit," of the Standard Specifications for Type 2.

Polyvinyl Chloride Coated Rigid Hot-Dip Galvanized Steel Conduit Bodies

The polyvinyl chloride (PVC) coated rigid galvanized steel (RGS) conduit bodies shall conform to the following requirements before the PVC coating is applied:

1. The PVC-coated RGS conduit bodies shall conform to Federal Specification W-C-586D, and UL Standard No. 514B. The PVC-coated RGS conduit bodies zinc surfaces shall remain intact and undistributed on both the inside and outside throughout the preparation and application processing.
2. The PVC-coated RGS conduit bodies shall be "Hot-Dipped" galvanized inside and out after fabrication with "Hot-Dipped" galvanized threads. The zinc coating for PVC-coated RGS conduit bodies will be tested in accordance with ASTM Designation: A239.
3. The "Hot-Dipped" galvanized threads, the exterior, and the interior for the PVC-coated RGS conduit bodies shall have a urethane coated of a nominal thickness of 50 microns.
4. The PVC-coated RGS conduit bodies shall conform to the following requirements when the PVC coating is applied:
    a. All PVC-coated RGS conduit bodies shall conform to NEMA Standard No. RN-1.
    b. The bond between the coatings and the metal shall be greater than the tensile strength of the coatings.
    c. All PVC-coated RGS conduit bodies shall have an exterior PVC coating of a minimum thickness of 1 mm applied by dipping in liquid plastisol.
    d. All Hubs on PVC-coated RGS conduit bodies shall have a PVC sleeve extending one pipe diameter or 53 mm whichever is less. The inside diameter (I.D.) of the sleeve to be equal to the outside diameter (O.D.) of the uncoated pipe.

e. Stainless steel encapsulated screws shall be supplied with all form 7 and form 8 PVC-coated RGS conduit bodies.
f. The PVC coating on all form 8 PVC-coated RGS conduit bodies shall form a gasket-like flange of at least 8 mm wide and 1 mm thick covering the top of the conduit body around the opening.
g. The PVC coating on all form 8 conduit body covers shall form a gasket-like flange of at least 8 mm wide and 1 mm thick covering at the bottom of the cover and mating with the flange of the conduit body.
h. All PVC-coated RGS conduit bodies for conduits smaller than 4 inch shall be Form 7 conduit bodies.

Liquidtight Flexible Metal Conduit

The liquidtight flexible metal conduit shall conform to the following requirements:

1. The flexible metal shall be constructed of continuously interlocked strip and shall be coated with sunlight resistant PVC jacket.
2. The metal core shall be hot-dipped galvanized steel core with a heavy coating of zinc.
3. The jacket shall be resistant to weather, temperature, oil and chemical breakdown.
4. Conform to the provisions of NEC Article 350 "Liquidtight Flexible Metal Conduit."
5. UL Safety Conformance.
6. The Contractor shall securely fasten liquidtight flexible metal conduit in place by an approved means within 12 inches of each box, cabinet, conduit body, or other conduit termination.

13-7 Support Hardware for Conduits

Stainless Steel Power-Stud Anchor-Threaded Version

Stainless steel power-stud, anchor-threaded version shall have a one-piece anchor body with the length identification code. The anchor bodies shall be manufactured from Type 316 stainless steel and shall have an expansion mechanism, which consists of a pair of interlocking independent wedges.

Anchors that have less than a 1.5 inch hole depth can be installed anywhere in the box. If the anchor will require a hole depth of greater than 1.5 inch, the Engineer shall consult with the Structural Engineer of Record prior to approving the location and depth of the anchor.

Anchor Component	Component Material
Anchor Body	Type 316L Stainless Steel
Nut	Type 316L Stainless Steel
Washer	Type 316L Stainless Steel
Expansion Wedge	Type 316L Stainless Steel

Mounting Racks

Mounting racks shall be constructed from 12-gage steel channel. The steel shall be fabricated by a formed hot-dip galvanized rolled steel method and have a 13 µm electro-galvanizing plating applied after fabrication. All fittings and hardware used for construction of the mounting racks shall be of steel with the same electro-galvanizing plating.

Threaded Bolt Sleeves and Bolts

Threaded bolt sleeves required for mounting plate shall conform to the requirements in ASTM Designation: A 36 and installed by the concrete fabricator. The bolts shall conform to the requirements in ASTM Designation: A 37.

Electrical Hardware

All electrical hardware, including but not limited to, bolts, nuts, washers, lock washers, fastening screws, expansion anchors, U-bolts and hold-down clamps shall be Type 316L stainless steel unless otherwise noted.

Conduit Supports

Conduit support brackets shall conform to the provisions in Section 75-1.03, "Miscellaneous Bridge Metal," of the Standard Specifications and these Special Provisions.

All anchors and fasteners for the conduit system shall comply with the requirements of Section 13-12 “Seismic Anchoring” of these Special Provisions.

The Contractor shall determine the construction methods for Seismic Zone 4 for conduit supports at each support location, including location and length of support channel. Once determined, the Contractor shall submit, including calculations, to the Engineer for review and approval at least 30 working days prior to ordering or fabrication of conduit supports.

The Engineer shall consult with the Structural Engineer of Record prior to approving concrete anchors.

Maximum conduit support span shall be four feet.

All metallic components shall be properly bonded to the grounding system with proper grounding lugs and through the system grounding conductor. Refer to “Bonding and Grounding” Section.

13-8 Pull Boxes, Splice Boxes and Junction Boxes

Grout shall not be placed in the bottom of pull boxes.

Splices shall be tagged with cable identification on permanent plastics marker tag.

NEMA 4XSS Pull/Splice/Junction Box

The NEMA Type 4XSS pull/splice/junction box shall conform to the following:

Construction

1. Enclosure bodies shall be either 14-gage Type 316L stainless steel.
2. Seams shall be continuously welded and ground smooth, no holes or knockouts.
3. Seamless foam-in-place gasket assures watertight and dust-tight seal.
4. Stainless steel screws and clamps assure watertight seal.
5. Door shall be removed by pulling stainless steel continuous hinge pin.
6. Weldnuts provided for mounting panels and terminal block kits.
7. Stainless steel back panel mounted inside the enclosure.
8. Enclosure shall have rolled lip around three sides of the door and all sides of the enclosure to assure a proper seal.
9. Oil-resistant gasket attached with oil-resistant adhesive and held in place with steel retaining strips.
10. External wall-mounting brackets.
11. Cover and sides of body shall have smooth brushed finish.
12. A ground lug for equipment ground.
13. Bonding provision on door.
14. Suitable for application in highly corrosive environments.
15. The box engraving, physical size and dimensions shall be as shown on the plans.

Industry Standards

1. UL 508 Type 4X.
2. NEMA/EEMAC Type 4X.
3. Latest edition of ANSI/IEC/NEMA 60529, IP-66
4. CSA Type 4X .

13-9 Conductors, Cables and Wiring

Splices shall be insulated by heat-shrink tubing of the appropriate size and type after thoroughly painting the spliced conductors with electrical insulating coating.

Non-testing of existing circuits and equipment shall not relieve the Contractor from the responsibility for malfunctioning of existing circuits due to the Contractor making splices in or connecting the circuits; such malfunctions shall be corrected at the Contractor's expense.

600 Volt Single Conductor Cable

All 600-volt single conductor cable shall be the following unless otherwise noted on the plans. The cables shall be insulated with a EPR insulation rated for 600 volts. The cables shall be UL listed as Type RHH, RHW-2, or USE-2, VW-1 600 V. All cables No. 1/0 and larger shall be UL Type TC rated.

The conductor shall be soft annealed uncoated copper Class B stranded per ASTM B-8. The EPR insulation shall meet the requirements of ICEA S-95-658, NEMA WC-70, and UL Standards 44 and 854. The composite insulation thickness shall be as follows:

Conductor Size	EPR Thickness
No. 14 - No. 10	45 mils
No. 8	60 mils
No. 6 - No. 2	75 mils
No. 1 - No. 4/0	100 mils
250 kcmil – 500 kcmil	130 mils

The cable surface shall be printed in a contrasting color with the following information:

1. Manufacturers' name.
2. Plant number.
3. Conductor size.
4. Cable type.
5. Voltage rating.

The cable shall be manufactured by The Okonite Company, General Cable, Prysmian, or equal. Manufacturer shall furnish a notarized certificate of compliance to demonstrate cable furnished is in compliance with ICEA S-95-658, NEMA WC-70, and UL 44.

600 Volt Multi-Conductor Cable

All 600 volt rated multi-conductor cables shall be the following unless otherwise noted on the plans drawings. The cables shall be insulated with ethylene propylene rubber, assembled as a multi-conductor cable with flame resistant fillers and binder tape with an overall PVC jacket. The cables shall be capable of operating continuously in both wet and dry locations at conductor temperature of 90°C for normal operation, 130°C for emergency overload rating, and 250°C short circuit rating.

The conductors shall be soft annealed uncoated copper Class B stranded in conformance to the requirements in ASTM Designations: B 8. The single conductors shall be ethylene propylene rubber insulated meeting the requirements of UL 1581 and ICEA S-95-658/NEMA WC-70. Color coding for sizes No. 10, 12, 14 and 16 AWG shall conform to the requirements in ICEA Method I Table K-2. Sizes No. 8 and larger shall be numerically coded using ICEA Method 4. The insulation thickness shall be as follows:

Conductor Size	EPR Thickness
No. 16	25 mils
No. 14 - No. 10	30 mils
No. 8 - No. 2	45 mils
No. 1/0 - No. 4/0	55 mils

The insulated conductors (and grounding conductor if required) shall be cabled together with flame resistant fillers and binder tape. The jacket shall be extruded PVC meeting the physical and dimensional requirements of ICEA S-95-658/NEMA WC-70. The cable shall pass

the vertical tray flame test requirements of IEEE 383 and 1202 and UL 1277. The cable shall be UL listed as Type TC.

The cable surface shall be printed in a contrasting color with the following information:

1. Manufacturers' name.
2. Plant number.
3. Number of conductors.
4. Conductor size.
5. Cable type.
6. Voltage rating.

The cable shall be manufactured by The Okonite Company, General Cable, Prysmian, or equal. The manufacturer shall furnish a notarized certificate of compliance to demonstrate cable furnished is in compliance with ICEA S-95-658/NEMA WC-70 and UL 1277.

Conductors

The conductors shall be compressed, Class B stranded copper. The copper conductors shall consist of all bare strands or tin-coated strands in the outer layer. Conductors shall be unbroken for the full length of the reels specified in the Purchase Order. Reels containing splices will be rejected.

Conductor Shield

The conductor shielding shall consist of an extruded, black-colored, nonmetallic semiconducting or non-conducting energy suppression thermosetting compound material.

Insulation

The insulation shall be a discharge resistant, ethylene propylene (EP) based compound and be listed by Underwriters Laboratories. The minimum average thickness of the insulation shall be 220 mils. The manufacturer shall perform the Insulation Corona Discharge Resistance Test (3.9.3.3 of ICEA S-93-639) tested in conformance with the requirements in ASTM Designation: D 2275-89, "Standard Test Method for Voltage Endurance of Solid Electrical insulating materials Subjected to Partial Discharges (Corona) on the Surface," and in NETA (National Electrical Testing Association) standards. Submit the results to the Engineer before acceptance of the cable.

Insulation Shielding

The insulation shielding shall consist of a nonmetallic semiconducting EPR material extruded directly over the insulation and a 4.72 mil bare copper tape. The nonmetallic semiconducting layer shall be black-colored. The layer shall be free stripping from the EP insulation.

Metallic Shield

The metallic shield shall be coated copper tape, helically applied with a minimum overlap of 12.5 percent, directly over the nonmetallic layer.

Overall Jacket

The overall jacket shall be extruded black-colored Polyvinyl Chloride (PVC) material with physical properties and thickness in accordance with Section 4.4.5 and Table 4-6 of ICEA S93-639 and shall be surface printed as required by UL Standard 1072.

Production Testing

Production testing shall consist of the following:

1. Continuous DC Spark testing of the non-conducting stress control layer prior to extrusion of the EP insulation.
2. Mooney Viscosity, Scorch Viscosity, and Specific Gravity of each batch of the EP insulation prior to extrusion.
3. AC Voltage Withstand test for a 5-minute duration, of each finished cable at 35 kV.
4. Volume Resistivity of the nonmetallic shield.
5. DC Resistance of all insulated conductors and metallic shields.
6. Dimensional Verification of all extruded layers.
7. Absence of water in conductors and interfaces confirmed.

Cable Accessories

The manufacturer of the splices and terminations shall have a minimum of 15 years specialized in manufacturing of heat shrinkable cable accessories. The manufacturer of the splices and terminations shall be the Raychem Corporation or approved equal.

The cable splicer shall have a minimum of five years experience and be certified by the splice and cable termination manufacturer. The splicer shall provide a resume documenting his experience and qualifications to be approved on this project by the Resident Engineer.

Cable Terminations

The termination shall be IEEE 48, Class 1, heat-shrinkable cable terminations in kit form, capable of properly terminating cables specified in this section. Terminations for single-conductor cables shall consist of heat-shrinkable radiation cross linked high dielectric constant linear stress relief material and heat-shrinkable radiation cross linked non-tracking outer insulation. Terminations shall contain high relative permittivity electric stress relief mastic for insulation shield cutback treatment and a heat-activated sealant for environmental sealing.

In addition to the components described above, the conductor kits shall contain heat-shrinkable components to seal the cable jacket, the phase conductor, ground wire and re-jacket phase and ground conductors.

Terminal blocks shall conform to standard specifications section 86-3.05E.

Cable Splices

A splice shall be scheduled at the construction boundaries. Where possible, longer cable runs are encouraged. The Splices, where necessary, shall be IEEE 404, heat shrinkable cable splices in kit form, capable of properly splicing cables specified in this section. Splice kits shall contain all necessary components to reinstate primary cable insulation, metallic shielding and grounding systems and overall jacket to the equivalent of the cable itself. Splices shall be of a uniform cross-section and shall consist of heat-shrinkable radiation cross-linked insulation. The splice shall be re-jacketed with a heavy-wall, heat-shrinkable sealant lined sleeve to provide a waterproof hot melt adhesive seal. Splices shall contain heat-shrinkable radiation cross-linked high dielectric constant linear stress relief material. Splices shall contain a high relative permittivity electric stress relief mastic for insulation shield cutback treatment and a heat-activated sealant for environmental sealing. Kits shall allow splicing cables with different types of insulation, conductor sizes, and shielding construction. Kits shall accommodate commercially available standard connectors.

Cable End Sealing Caps

The end seal caps shall be heat-shrinkable cross linked polymeric end sealing caps capable of sealing cables specified in this section. End caps shall be pre-coated with a heat activated sealant.

DC High Potential Test

Perform DC high potential test of each conductor in accordance with NEMA WC 5. Contractor shall furnish a report for the Engineers' approval documenting the test results.

Cable Pulling

The Contractor shall pull conductors by hand, or by mechanical aids, such as winches or other power actuated pulling equipment, if permitted. Prior to installation of conductors by mechanical aids, the Contractor shall test the conductors in accordance with Section 10-3.09, "Conductors, Cables, and Wiring," of the Special Provisions. The Contractor shall submit the manufacturer's recommended procedures for pulling the conductors to the Engineer for review and approval at least 20 days prior to installing the conductors.

If a mechanical aid is allowed then a tension measuring devise or breaking swivel shall be placed between the end of the conductor grip and pull rope to ensure that the tension does not exceed 100 percent of recommended tension. The mechanical aid shall have a ball bearing swivel to prevent the conductors from twisting during installation.

13-10 Lighting

LED Linear Floodlight

1. LED linear floodlight shall be 12 inch long fixture, 1.5 inch in diameter, circular in cross section, UL listed for wet locations, rotatable within the bracket for field adjustable aiming, for white light output.
2. The fixtures shall have the flexibility to be daisy chained for continuous row mounted application, using rigid interconnect plug, without shadows between fixtures.
3. The electrical “plug” connectors (18 foot 18 AWG, 300 V rated power cords) shall be either right or left side feed. Refer to drawings and verify in field prior to fixture installation
4. The housing shall be light weight yet durable extruded aluminum providing recommended heat sink requirements for LEDs.
5. Fixture shall have precision optic assembly that offers very high transmissivity, UV stability, and excellent longevity.
6. Each LED shall be provided with thermal and electrical management properties in accordance with the LED manufacturers’ recommendations.
7. Projected average rated life shall not be fewer than 50,000 hours at 70% of lamp lumen output. Minimum of five year warranty.
8. LEDs shall have a CRI greater than 80. Color shall be 3000K, 4000K or 5000K White Standard Output, subject to the Engineer’s approval.
9. The distribution angle shall be ten degrees.
10. The mounting method shall be surface.
11. Power consumption inclusive of power supply losses shall not exceed 2 Watts per foot.
12. Finish shall be standard anodized aluminum.
13. Voltage shall be 120 V, 60 Hz.
14. The manufacturer shall be Cooper Industries io Lighting or approved equal.

LED Drivers

Features

1. 24 Volts, 100 Watts for architectural LED lighting systems
2. UL Class 2
3. UL Outdoor Damp location rated (IP 66)
4. Ultra small, compact size: no larger than 9.5 inch X 1.7 inch X 1.16
5. Extreme low temperature performance (-40 degree C)
6. Generous high temperature capability (+60 degree C)
7. Tightly regulated output (1% line, 5% load)
8. Minimum 5 year warranty
9. Total Harmonic Distortion: less than 20%
10. Power Factor: greater than 90%
11. Current Crest Factor: 1.5 max
12. 120 VAC Input, 117 W maximum input power, 0.98 A maximum input current
13. 24 VDC Output, 100 W maximum output power, 4.1 A maximum output current
14. Two Solid Copper Wires (two 8 inch leads)
15. 1.41 lbs or less
16. The manufacturer shall be Advance or approved equal.

Industry Standards

1. UL1310 for Class 2
2. FCC47 SubPart15
3. CISPR15
4. CISPR22 Class A

Mock Up

Construct mock-up of the linear floodlight on the canopy as depicted on drawing AE-105 to measure luminaire performance. Include **15** luminaries connected in series. Obtain the Engineer's approval prior to procurement and further work.

Locate the light fixtures **where directed by the Engineer.**

Incorporate accepted mock-up as part of Work. Otherwise, redo mock-up per the requirements and satisfaction of the Engineer.

Photoelectric Controls

Features

1. Cadmium sulfide photocell
2. Sonic welded polycarbonate housing and lens to seal out moisture
3. Delay action eliminates load switching OFF due to car headlights and lightning
4. 6 inch leads
5. Designed for spot/flood type fixtures

6. Controls come with a washer gasket and locking nut
7. Stem and swivel mounting, with all necessary mounting hardware and instructions
8. Thermal-type controls
9. Utilizes a dual temperature compensating bi-metal and composite resistor, snap action contact blades, and silver alloy contacts for reliable long life operation over ambient temperature extremes

Ratings

1. ½ or 1 inch threaded swivel
2. 1000 VA and 8.3 Amps Ballast
3. 120 Volts AC supply voltage
4. 1-5 FC ON; 3-15 FC OFF (photo eye clear on models with shield)
5. Consumes under 2 Watts on average
6. Operates between -40 degree F and 158 degree F
7. Weighs 0.21 lb
8. 100% factory tested for function within specified light levels

Industry Standards

1. CSA
2. C/US

Lighting Contactors

Features

1. Inductive rated
2. Electrically held
3. Easy to install and maintain
4. Standard with (1) Normally Open (NO) auxiliary contact
5. Maximum 20 Amps Rating, 2 Poles, 120 Volts/60 Hertz Coil

HOA Switch

Features

- 3-postion maintained switch, black, non-illuminated
- 30.5 mm Heavy-Duty Watertight/Oil-tight pushbutton
- Zinc die cast construction with chrome-plated housing and mounting nut
- Enclosed silver contacts with reliability nibs which improve contact reliability even under dry circuit and fine dust conditions
- Grounding nibs bite through paint and other coatings on the operator casing to provide secure ground
- Fuse type
- 6 Amp switching capacity, 120 V
- Slow make and break contact operation. All normally closed contacts have positive opening operation, i.e., normally closed contacts are forced to open in the event of contact weld or spring breakage, for improved safety

- Drainage holes prevent buildup of liquid inside the operator which can prevent operation in freezing environments
- Diaphragm seals with drainage holes

Industry Standards

A. CE EN60947-5-1
B. UL 508
C. CSA C22.2 No.13
D. Ingress protection

Fluorescent Luminaires

The Contactor shall complete luminaire assemblies, with features, options, mounting, and accessories as scheduled on the plans.

Features

1. Non-PCB
2. Thermally protected
3. The manufacturer shall be Lithonia Lighting or approved equal.

Ballasts

The fluorescent lights shall have 120 Volt or multi-volt, UL listed electronic ballasts consist of components (core and coils, capacitors and starting aid, if required). The ballast shall be readily removable without removing the luminaire.

Features

1. Less than 10% Total Harmonic Distortion (THD)
2. Program Rapid Start
3. Suitable for lamps and environmental conditions specified

Industry Standards

A. ANSI C82.1

Submittals

Each submittal package shall consist of six copies. The Engineer shall be allowed 90 days for the review of submittals. The Contractor shall submit all requirements including mock-up installation, and obtain approval from the Engineer within the 90 days. Each separate item submitted shall bear a descriptive title and the State contract number.

Shop Drawings: Indicate dimensions and components for each luminaire not standard product of manufacturer.

Product Data: Submit dimensions, ratings and performance data.

All luminaires are subject to initial acceptance testing prior to main delivery. Main deliveries may be subject to additional random sample testing.

LED Light Fixture submittals must be accompanied by:

1. Product specification sheets or other documentation that includes the designed parameters as detailed in the specification. The parameters include:
   a. The name of manufacturer, catalog number, size, capacity, finish, pertinent ratings, lumen output per foot, and power cord length.
   b. Maximum power in watts
   c. Maximum designed junction temperature for the specific luminaire model
   d. L70 in hours when extrapolated for the average night time operating temperature
2. IES LM-79 and IES LM-80 compliant test reports from a CALiPER-qualified or NVLAP-approved testing laboratory for the specific model submitted.
3. Photometric file (IES) based on LM-79 test report.
4. Photometric analysis with foot-candle points for vertical architectural canopy plane and horizontal surface on roadway.
5. Initial and End-of-Life lighting simulations showing lighting levels on the canopy façade.
6. Datasheets from the LED manufacturer that includes information on life expectancy based on junction temperature.
7. Datasheets from power supply manufacturer that includes life expectancy information.

Qualifications

The manufacturer shall be a company specializing in manufacturing products specified in this section with minimum three years documented experience.

13-11 Wiring Devices

Wall Light Switches

1. Single- and Double-Pole Switches: 20A, 120V, comply with DSCC W-C-896F and UL 20.

Receptacles

1. NEMA 5-20R
2. Color: white
3. 20A, 120V rated

Outdoor receptacle(s) shall be GFCI weatherproof and with threaded cap(s) which effectively seal the housing when not in use.

Wall Plates

1. Plate-securing screws: Metal with head color to match plate finish
2. Material for interior locations: Galvanized steel
3. Material for exterior locations: Cast aluminum with spring-loaded lift cover, listed and labeled for use in “Wet Locations.”

13-12 Seismic Anchoring

All equipment including fixtures and raceways shall be mounted and braced to withstand, without damage, seismic acceleration forces in both horizontal and vertical directions of 0.33 g, for installation in Seismic Zone 4, in accordance with the Uniform Building Code (UBC), Section 2312. The anchoring methods are to be submitted for review by the Engineer. The installation shall meet requirements of the Essential Services Building Seismic Safety Act, Senate Bill 230, Title 24.

13-13 Bonding and Grounding

Bonding and grounding shall conform to the provisions in Section 86-2.10, "Bonding and Grounding," of the Standard Specifications and these Special Provisions.

Equipment bonding and grounding conductors are required in all conduits. The bonding wire size shall be increased to match the circuit breaker size in conformance with the Code, or shall be as shown on the plans.

Bonding of all metallic conduits in metal pull, splice, or junction boxes shall be by means of approved bonding bushings and bonding jumpers connected to the bonding wire running in the conduit system.

All equipment and metallic components shall be properly bonded to the grounding system with proper grounding lugs and through the system grounding conductor.

Building Grounding Systems

Grounding systems use the following elements as grounding electrodes:

1. Existing Metal underground water pipe.
2. Metal building frame.
3. Concrete-encased electrode.
4. Ground ring.
5. Existing Metal underground gas piping system.
6. Rod electrode.
7. Plate electrode.

Grounding System Resistance shall be 5 ohms maximum.

Submittals

A. Product Data: Submit data on grounding electrodes and connections.
B. Test Reports: Indicate overall resistance to ground and resistance of each electrode.
C. Manufacturer’s Installation Instructions: Submit for active electrodes.
D. Manufacturer’s Certificate: Certify Products meet or exceed specified requirements.

Closeout Submittals

A. Execution and Closeout Requirements: Requirements for submittals.
B. Project Record Documents: Record actual locations of components and grounding electrodes.

Qualifications

A. The manufacturer shall be a company specializing in manufacturing Products specified in this section with minimum three years documented experience.
B. The installer shall be a company specializing in performing work of this section with minimum three years documented experience.

Quality Assurance

A. Provide grounding materials conforming to requirements of NEC, IEEE 142, and UL labeled.
B. Perform Work in accordance with Caltrans Standards, Specifications and Plans.
C. Maintain one copy of each document on site.

Pre-Installation Meetings

A. The Contractor shall arrange pre-installation meeting with the Engineer.
B. Convene minimum one week prior to commencing work of this section.

Delivery, Storage, and Handling

A. Accept materials on site in original factory packaging, labeled with manufacturer's identification.
B. Protect from weather and construction traffic, dirt, water, chemical, and mechanical damage, by storing in original packaging.
C. Do not deliver items to project before time of installation. Limit shipment of bulk and multiple-use materials to quantities needed for immediate installation.

Coordination

A. The Contractor shall coordinate with the Engineer.
B. Complete grounding and bonding of building reinforcing steel prior to concrete placement.

Products

A. Rod Electrode
   1. Material: Copper

2. Diameter: ¾ inch
3. Length: 10 feet
4. Connector: Connector for exothermic welded connection

B. Wire
1. Wire material shall be stranded copper.
2. Grounding Electrode Conductor shall be copper conductor bare.
3. Bonding Conductor shall be copper conductor bare.
4. Foundation Electrodes: 4 AWG

C. Mechanical Connectors

Mechanical connector manufacturers shall be:
1. Copperweld, Inc.,
2. Erico, Inc.,
3. O-Z Gedney Co.,
4. Thomas & Betts, Electrical or approved equal.

The mechanical connectors shall be bronze connectors suitable for grounding and bonding applications, in configurations required for particular installation.

D. Exothermic Connections

Exothermic connection manufacturers shall be:
1. Copperweld, Inc.,
2. Erico, Inc.,
3. O-Z Gedney Co.,
4. Thomas & Betts, Electrical or approved equal.

Exothermic connection products shall include but not be limited to: exothermic materials, accessories, and tools for preparing and making permanent field connections between grounding system components.

Examination

The Contractor shall verify the following:

- Existing conditions before starting work.
- Final backfill and compaction has been completed before driving rod electrodes.

Preparation

The Contractor shall remove paint, rust and surface contaminants at connection points.

Existing Work

The Contractor shall perform the following:

- Modify existing grounding system to maintain continuity to accommodate renovations.
- Extend existing grounding system using materials and methods compatible with existing electrical installations, as specified, or as directed by the Engineer.

Installation

Subject to the Engineer's approval, the Contractor shall install the following if the examination discovers grounding inadequacy:

- Grounding and bonding system in accordance with IEEE 142.
- Additional rod electrodes to achieve specified resistance to ground.
- Grounding and bonding conductors concealed from view.
- 4 AWG bare copper wire in foundation footing.
- Grounding electrode conductor and connect to reinforcing steel in foundation footing electrically bond steel together.
- Bond together metal siding not attached to grounded structure; bond to ground.
- Bond together each metallic raceway, pipe, duct and other metal objects. Install 2 AWG bare copper bonding conductor.
- Equipment Grounding Conductor: install separate, insulated conductor within each feeder and branch circuit raceway. Terminate each end on suitable lug, bus or bushing.
- Connect to site grounding system.
- Bond to lightning protection system.
- Install continuous grounding using underground cold water system and building steel as grounding electrode. Where water piping is not available, install artificial station ground by means of driven rods or buried electrodes.
- Permanently ground entire light and power system in accordance with NEC, including service equipment, distribution panels, lighting panel boards, switch and starter enclosures, motor frames, grounding type receptacles, and other exposed non-current carrying metal parts of electrical equipment.
- Accomplish grounding of electrical system by using insulated grounding conductor installed with feeders and branch circuit conductors in conduits. Size grounding conductors in accordance with NEC. Install from grounding bus of serving panel to ground bus of served panel, grounding screw of receptacles, lighting fixture housing, light switch outlet boxes or metal enclosures of service equipment. Ground conduits by means of grounding bushings on terminations at panel boards with installed number 12 conductor to grounding bus.
- Grounding electrical system using continuous metal raceway system enclosing circuit conductors in accordance with NEC.

- Permanently attach equipment and grounding conductors prior to energizing equipment.

Field Quality Control

The Contractor shall perform the following:

- Field inspecting, testing, adjusting, and balancing.
- Inspect and test in accordance with NETA ATS, except Section 4.
- Inspections and tests listed in NETA ATS, Section 7.13.
- Ground resistance testing in accordance with IEEE 142.
- Leakage current tests in accordance with NFPA 99.
- Continuity testing in accordance with IEEE 142.
- When improper grounding is found on receptacles, the Contractor shall check receptacles in entire project and correct. Perform retest.

13-14 Electrical Equipment

Utility Panels

The utility panel shall conform to the following requirements.

The panels and all components shall be designed, manufactured and tested in accordance with the latest applicable standards of ANSI and NEMA.

Features

1. All bussing shall be UL approved copper cable bussing, fully rated.
2. The enclosure shall be NEMA Type 12. The top and bottom gutters shall be minimum 5.5 inch and the side gutters shall be minimum 6 inch.
3. The enclosure shall be fabricated from 304D stainless steel.
4. Internal parts shall be fabricated from 14 gauge cold rolled steel.
5. The ground bar and neutral bar shall be standard, bolted in the enclosure.
6. Cabinet shall be all welded construction with welding materials specifically designed for the material used.
7. All fasteners, latches, and hardware shall be of stainless steel and all hinges shall be continuous piano style.
8. Shall have hinged dead front with ¼ turn latch & knurled knobs.
9. Dead front door shall be hinged on the same side as exterior door and open a minimum of 100°.
10. Cabinets shall have fully framed side hinged outer doors with top drip lip and closed cell neoprene flange compressed gaskets.
11. Doors 47 inch or smaller shall have a single point lock. Doors larger than 47 inch shall have a three point pad-lockable latch system.
12. There shall be no exposed nuts, bolts, screws, rivets, or other fasteners on the exterior.
13. Cabinet shall have an enclosed swept pull section.

14. The Removable back pan shall be mounted on 4 welded 6 mm studs.
15. All circuit breakers shall be mounted in a vertical position, handle up for “ON”, and handle down for “OFF”.
16. Circuit breakers shall be of cable-in, cable-out type.
17. The function of all circuit breakers, switches, and other components as required shall be identified by laminated engraved plastic nameplates with minimum 6 mm letters fastened with a minimum of two #4-40 stainless steel machine screws.
18. The panel shall be completely pre-wired in the factory.

Circuit Breaker Type B

1. The circuit breaker Type B shall be a molded case circuit breaker providing complete circuit overcurrent protection by having inverse time and instantaneous tripping characteristics and shall be designed, manufactured, assembled and tested in accordance with UL 489 and NEMA AB-1 Standards. The frame rating and settings shall be as shown on the plans.
2. The molded case circuit breakers shall be operated by a toggle type handle and shall have a quick-make, quick-break over-center switching mechanism that is mechanically trip free from the toggle handle so that the contacts cannot be held closed against short circuits and abnormal currents. All poles shall be so constructed that contacts open, close and trip simultaneously in the either ON or OFF position. All breaker covers shall have molded-in "ON" and "OFF" position.
3. The circuit breaker frames shall employ high strength, molded-polyester, glass-reinforced cases and covers. The breaker frame shall have legible, tamper-proof nameplates containing maximum frame ampere ratings, maximum voltage ratings and interrupting ratings in accordance with UL standards. All breaker frames sizes shall have external means for manually tripping the breaker and exercising the mechanism and trip latch member.
4. Automatic tripping of the breaker shall be clearly indicated by the handle position. Contacts shall be non-welding silver alloy and arc extinction shall be accomplished by means of arc chutes.
5. The circuit breaker rating shall be as specified on the plans and as required by the load and coordination studies.
6. Ground fault protection shall be provided where indicated. Shunt trips and auxiliary switches shall be provided where required.

Disconnect Switch

The safety switch shall be a heavy-duty low-voltage safety switch with the following requirements:

1. Rated for 600 V(ac).
2. Terminals be copper-aluminum.
3. The enclosure shall be NEMA Type 4X dust-tight and oil-tight enclosure.
4. A metal nameplate shall be mounted on the front cover that contains switch information (type, catalog number, electrical ratings V, A, and horsepower).
5. Handle whose position is easily recognizable and padlockable in the "Off" position.
6. Visible blades.

7. Reinforced fuse clips.
8. Nonteasible, positive, quick-make quick-break mechanisms.
9. Switch assembly plus operating handle as an integral part of the enclosure.
10. Switch shall be UL listed, horsepower rated, meet Federal Specification WS-885c, and NEMA Specifications KSI, latest revision.
11. Switch shall have defeatable door interlocks that prevent the door from opening when the operating handle is in the "ON" position.
12. Switch shall have line terminal shields.

Qualifications

For the equipment specified herein, the manufacturer shall be ISO 9000, 9001 or 9002 certified. The manufacturer of this equipment shall have produced similar electrical_equipment. When requested by the Engineer, an acceptable list of installations with similar equipment shall be provided.

Submittals

Submittal package shall consist of six copies. Submittals shall be delivered to the Engineer at least 180 days prior to the start of the installation. The Engineer shall be allowed 90 days for review of the submittals. The following information shall be submitted to the Engineer for review and approval:

1. Dimension drawing and weight.
2. Technical certification sheet.
3. Conduit entry and exit locations.
4. Component ratings

13-15 Arc Flash Hazard Labeling

The Contractor shall conform with the NFPA 70E and label all electrical equipment used in this project.

NFPA 70E Compliant Arc Flash Hazard Label on the electrical equipment shall accurately show all of the following information:

- Available incident energy and corresponding working distance
- Minimum arc rating of clothing
- Arc flash protection boundaries
- Required level of PPE
- Highest Hazard/Risk Category (HRC) for equipment
- Nominal system voltage
- Arc flash boundary

13-16 Electrical Equipment Identification and Labeling

General

The Contractor shall furnish materials and labor as required for the complete identification and labeling of conduits and electrical equipment as shown on the drawings. Contractor shall provide labeling materials and labor as required to completely label components of all electrical systems, whether specifically called for or not.

The Contactor shall verify that all electrical equipment and conduits whether furnished by the Contractor, the Owner or others, are provided with permanent identification or labeling. All labeling shall be furnished and installed by the Contractor.

The intent of the final labeling is to allow the Owner or persons contracted by the Owner to identify any part of the electrical system through physical identification of electrical components at the specified point without the use of electrical, electronic or mechanical means of identification.

Device labels shall be installed on the exterior of devices. Device labels may be installed on the interior of a device at the primary access point. Labels shall be installed in such a position as to be visible during normal maintenance of the electrical systems. Labels shall be installed on conduits every 30 feet and be made visible. Labels shall be installed at every point of transition between conduits and access points.

To maximize the legibility, all labels shall be printed or generated by a mechanical device, and shall not be written by hand. No handwritten or non-permanent labels are allowed. Labels in exterior spaces shall be able to withstand extended exposure to the outdoor elements and shall have a useful life equal or greater than that of the component labeled.

Submittals

All submittals shall be made to the Owner's representative.

The Contractor shall submit physical samples of each style or type of labeling to be used for each application, including the actual numbering to be used in completing the labeling. Numbering shall be printed on each label and shall include the font, font size, pitch and shall be printed by the printing method to be used by the Contractor in completion of the labeling.

The labeling samples are intended to represent the quality and workmanship to be provided by the Contractor in the field.

Labeling Of Electrical Equipment

The Contractor shall provide and install nameplates on all electrical equipment. Letter height shall not be smaller than 0.5 inch. The letter font shall be condensed gothic type.

All electrical equipment, electrical panels, panel boards, junction/terminal boxes, and the like shall be identified using engraved laminated plastic nameplates with white surface and black core letters, attached with threaded fasteners. The inscription shall be as shown on the plans, reflect the content and function of the specific equipment, or shall be approved by the Engineer.

A removable circuit directory shall be made for each lighting and distribution panel, and labeled with the function of each circuit on the panel. All directories shall be of a non-corrodible material.

The Contractor shall also provide Arc Flash Warning Sign per NEC 110.16 on all equipment. The Arc Flash Warning Sign label must show all of the following:

- Available incident energy and corresponding working distance
- Minimum arc rating of clothing
- Required level of PPE
- Highest Hazard/Risk category (HRC) for equipment
- Nominal System
- Arc flash boundary

Conduits

All conduits shall be labeled with their destinations and functions by tagging at both ends with 2 inch round brass tags. Letter height shall be 0.25 inch minimum. The tags shall be strapped to the conduits with stainless steel wires inserted through holes, drilled through the tag.

13-17 Removing, Reinstalling or Salvaging Electrical Equipment

Salvaged electrical materials shall be hauled to Caltrans Electrical Maintenance Station, 30 Rickard Street, San Francisco, CA 94134, (415) 330-6509 and stockpiled.

The Contractor shall provide the equipment, as necessary, to safely unload and stockpile the material. A minimum notice of 2 business days shall be given prior to delivery.

13-18 Closeout Submittals

Project record drawings shall be submitted in accordance with the requirements listed below.

One set of the project plans shall be kept on file by the Contractor for the sole purpose of recording as-built information and shall be so marked. Data to be recorded shall include, but not be limited to, all clarifications and change orders, location of underground utilities, and all changes in size, manufacture or location of features shown on the plans. In addition, the locations of significant items such as main filters, controls, isolating valves and similar items shall be highlighted on this set of as-built plans.

All corrections shall be made in red ink or red pencil. Superseded material shall be neatly lined out. Original figures shall not be eradicated nor written over. Each sheet shall be clearly marked as having "As-Built Changes" or "No As-Built Changes" as appropriate. The Contractor shall sign and date each sheet of the plans certifying that all information shown is correct.

Supplemental plan sheets shall be included when as-built information cannot be clearly shown on project plans. Supplemental plan sheets for the as-built shall have the contract number and must be 11 inch x 17 inch in size.

The final location of all underground utilities shall be recorded by depth from finished grade and by offset distance from permanent surface structures. Equipment within the building and all concealed conduits shall be recorded by offset distances from building walls.

Before the final inspection, the Contractor must submit the as-built to the Engineer for review to determine completeness and adequacy. If the as-built is unacceptable, the Contractor shall record the required information as directed by the Engineer. If the as-built is acceptable the Contractor shall sign and date the as-built certifying that all the information shown is correct.

The as-built shall be submitted to the Engineer prior to acceptance of the contract.

13-19 Payment

The contract lump sum price paid for the work of this project shall include full compensation for furnishing all labor, materials, tools equipment, and incidentals, and for doing work involved in the listed items below, complete in place, including manuals, preparation and delivery of any and all proposals, plans, submittals, or documents to the Engineer, warranty work or modifications, software or software changes, testing and training, as shown on the plans, as specified in the Standard Specifications and these Special Provisions, and as directed by the Engineer:

Full compensation for hauling and stockpiling electrical materials shall be considered as included in the contract price paid for the item requiring the material to be salvaged and no additional compensation will be allowed therefore.

Appendix B

CONTRACT DRAWINGS / PLANS

DRAWINGS / PLANS ARE BOUND SEPARATELY FROM THIS DOCUMENT

Dist	COUNTY	ROUTE	POST MILES TOTAL PROJECT	SHEET No.	TOTAL SHEETS
04	Ala	80	2.0/2.3	1	83

STATE OF CALIFORNIA

DEPARTMENT OF TRANSPORTATION

PROJECT PLANS FOR CONSTRUCTION ON

STATE HIGHWAY

IN ALAMEDA COUNTY
IN OAKLAND ON ROUTE 80
FROM 2.0 MILE WEST TO 2.3 MILE
OF THE SAN FRANCISCO-OAKLAND BAY BRIDGE

TO BE SUPPLEMENTED BY STANDARD PLANS DATED MAY 2006

INDEX OF PLANS

Sheet No.	Drawing No.	Description
GENERAL		
1	T-1	TITLE AND LOCATION MAP
CIVIL		
2	K-1	KEY MAP
3-5	L1 TO L-3	LAY OUT PLAN
6-11	C-1 TO C-6	CONSTRUCTION DETAILS
12	CS-1	CONSTRUCTION AREA SIGNS
13	SC-1	CONTRACTOR LAYDOWN AREA
14	SC-2	STAGE CONSTRUCTION
15-17	S-1 TO S-3	SIGN PLAN
18	SQ-1	SIGN QUANTITY SUMMARY
19	Q-1	QUANTITY SUMMARY
ARCHITECTURAL		
20	AA-001	LOCATION MAP
21	AA-002	ABBREVIATIONS, SYMBOLS AND GENERAL NOTES
22	AA-003	STAGE CONSTRUCTION PLAN
23	AA-101	BASEMENT LEVEL PLAN
24-25	AA-103 TO AA-104	TOLL BOOTH LEVEL PLAN
26-27	AA-105 TO AA-106	ROOF PLAN
28-31	AA-201 TO AA-203, AA-205	ELEVATIONS
32	AA-206	CANOPY FRAMING
33-34	AA-402 TO AA-403	WALL SECTIONS
35-36	AA-405 TO AA-406	WALL DETAILS
37-38	AA-407 TO AA-408	PAINTING DETAILS
39	AA-410	MISCELLANEOUS DETAILS
40-42	AA-412 TO AA-414	UTILITY ENCLOSURE
43	AA-451	PUMPSTATION - DEMOLITION
44-50	AA-501 TO AA-507	PUMP STATION
51	AA-509	OPTIONAL SCAFFOLDING SYSTEM
52	AA-510	OPTIONAL PREFABRICATED SYSTEM
STRUCTURAL		
53	AS-001	ABBREVIATIONS, SYMBOLS & GENERAL NOTES
54	AS-002	GENERAL STRUCTURAL PLAN AND ELEVATIONS
55-56	AS-101 TO AS-102	PARTIAL FRAMING DEMOLITION PLAN
57-59	AS-201 TO AS-203	PARTIAL FRAMING PLAN AND ELEVATION
60-62	AS-204 TO AS-206	DETAILS
63-70	AS-501 TO AS-508	PUMP STATION
71-72	AS-511 TO AS-512	STAIRWAY NO.7 REMOVAL
ELECTRICAL		
73	AE-101	GENERAL NOTES, LEGEND & ABBREVIATIONS
74-76	AE-102 TO AE-104	CONDUIT ROUTING
77	AE-105	LIGHTING PLAN
78	AE-106	SECTION AND ELECTRICAL DETAILS
79	AE-107	PARTIAL ONE LINE DIAGRAM
80	AE-108	PNL-CMS/LIGHTING PANELBOARD SCHEDULE
81	AE-109	ELECTRICAL WIRING DIAGRAM & CONTROL BOX
82	AE-110	PUMP STATION - ELECTRICAL PLAN & SCHEDULE
83	AE-111	PUMP STATION - ELECTRICAL WIRINGS

LOCATION MAP

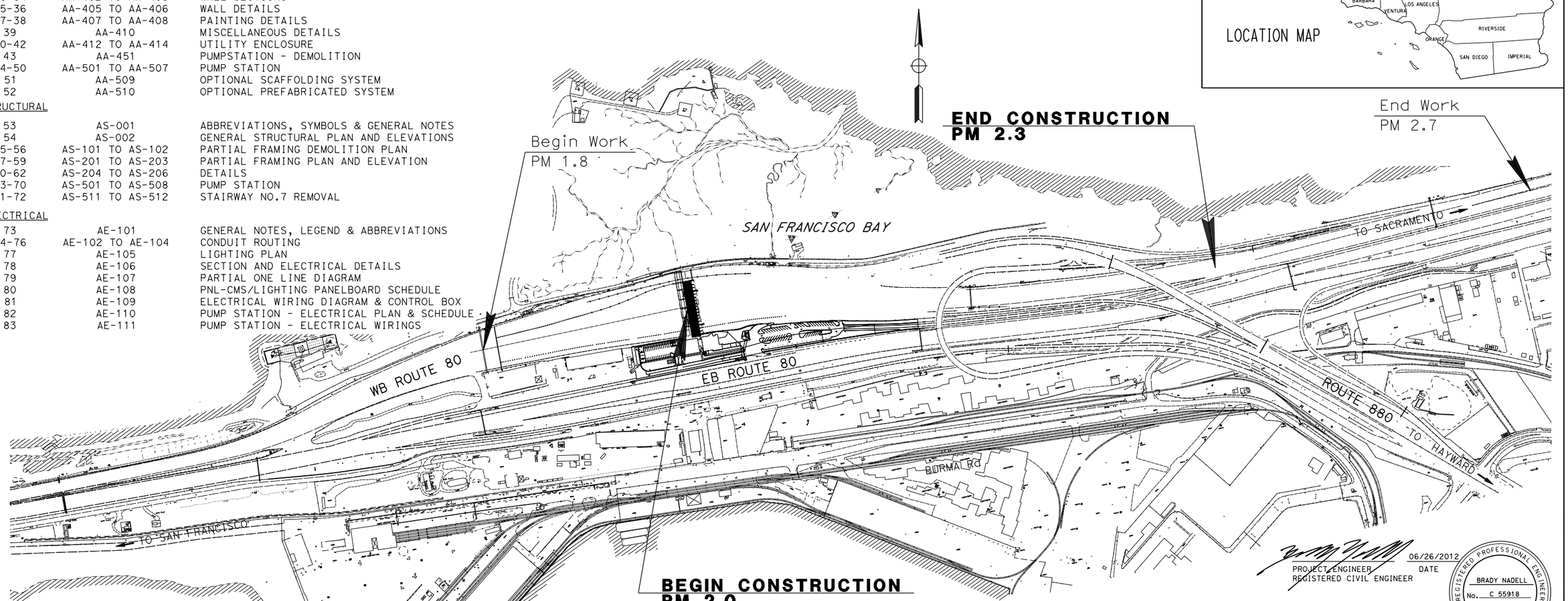

THE CONTRACTOR SHALL POSSESS THE CLASS (OR CLASSES) OF LICENSE AS SPECIFIED IN THE "NOTICE TO BIDDERS."

PROJECT ENGINEER REGISTERED CIVIL ENGINEER — DATE 06/26/2012

REGISTERED PROFESSIONAL ENGINEER — BRADY NADELL — No. C 55918 — Exp. 12-31-2012 — CIVIL — STATE OF CALIFORNIA

PLANS APPROVAL DATE

THE STATE OF CALIFORNIA OR ITS OFFICERS OR AGENTS SHALL NOT BE RESPONSIBLE FOR THE ACCURACY OR COMPLETENESS OF SCANNED COPIES OF THIS PLAN SHEET.

CONTRACT No.	BATA011
PROJECT ID	0000000000

PROJECT MANAGER

DESIGN ENGINEER

LAST REVISION 00-00-00 — DATE PLOTTED => 26-JUN-2012 — TIME PLOTTED => 14:25

Dist	COUNTY	ROUTE	POST MILES TOTAL PROJECT	SHEET No.	TOTAL SHEETS
04	Alg	80	2.0/2.3	2	83

REGISTERED CIVIL ENGINEER DATE 06/26/2012

PLANS APPROVAL DATE

REGISTERED PROFESSIONAL ENGINEER
JAMES ZANDIAN
No. C 51957
Exp. 6-30-12
CIVIL
STATE OF CALIFORNIA

THE STATE OF CALIFORNIA OR ITS OFFICERS OR AGENTS SHALL NOT BE RESPONSIBLE FOR THE ACCURACY OR COMPLETENESS OF SCANNED COPIES OF THIS PLAN SHEET.

Parsons Brinckerhoff
303 Second Street
Suite 700 North
San Francisco, CA 94107-1317

BAY AREA TOLL AUTHORITY
101 EIGHT STREET
OAKLAND, CA 94607

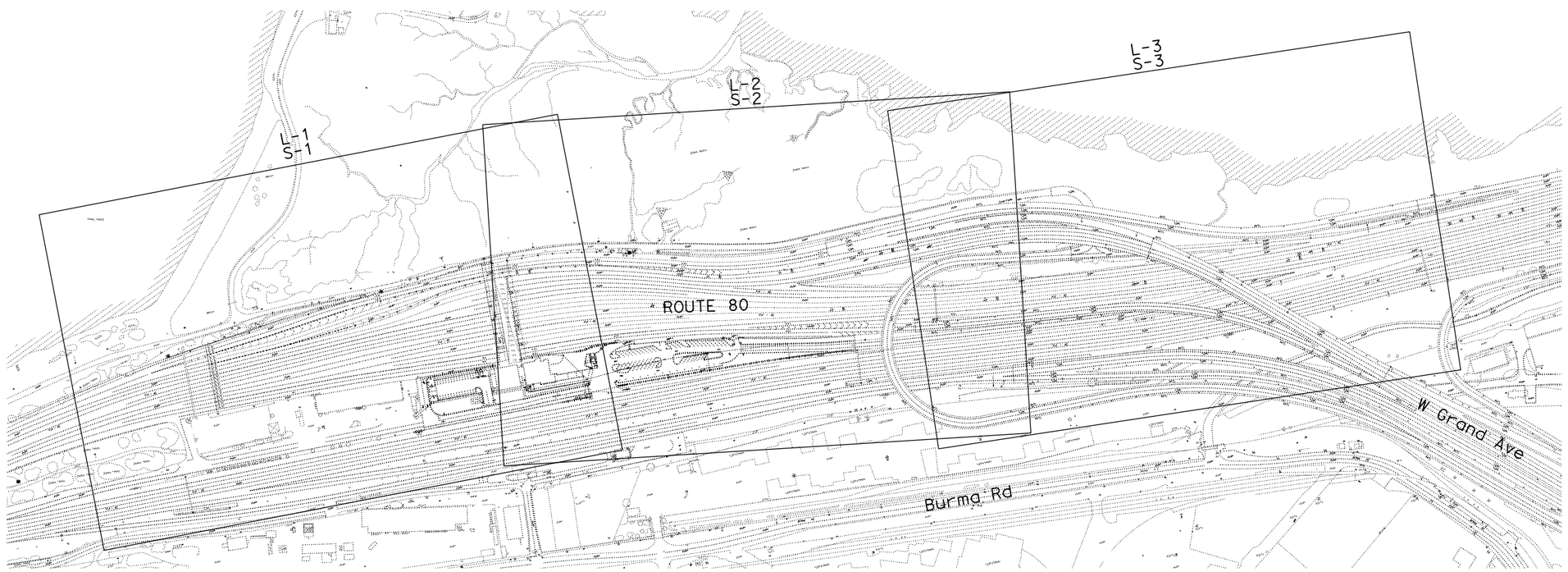

KEYMAP

NO SCALE

K-1

CALCULATED-DESIGNED BY
CHECKED BY
CHALIT SUNTHUDKARN
JAMES ZANDIAN
REVISED BY
DATE REVISED
FUNCTIONAL SUPERVISOR

STATE OF CALIFORNIA - DEPARTMENT OF TRANSPORTATION
Caltrans

LAST REVISION 00-00-00
DATE PLOTTED => 26-JUN-2012
TIME PLOTTED => 14:26

Dist	COUNTY	ROUTE	POST MILES TOTAL PROJECT	SHEET No.	TOTAL SHEETS
04	Ala	80	2.0/2.3	3	83

REGISTERED CIVIL ENGINEER DATE 06/26/2012

PLANS APPROVAL DATE

REGISTERED PROFESSIONAL ENGINEER JAMES ZANDIAN No. C 51957 Exp. 6-30-12 CIVIL STATE OF CALIFORNIA

THE STATE OF CALIFORNIA OR ITS OFFICERS OR AGENTS SHALL NOT BE RESPONSIBLE FOR THE ACCURACY OR COMPLETENESS OF SCANNED COPIES OF THIS PLAN SHEET.

Parsons Brinckerhoff
303 Second Street
Suite 700 North
San Francisco, CA 94107-1317

BAY AREA TOLL AUTHORITY
101 EIGHT STREET
OAKLAND, CA 94607

LEGEND:

(1) CRASH CUSHION COUNT

BCDC — SAN FRANCISCO BAY CONSERVATION AND DEVELOPMENT COMMISSION (BCDC) JURISDICTIONAL LIMITS

REMOVE AND REPLACE EXISTING CRASH CUSHIONS SEE CONSTRUCTION DETAIL SHEET C-1 AND C-2 FOR CRASH CUSHION LAYOUT AND CRASH CUSHION DETAILS

NOTES:

1. FOR ACCURATE RIGHT OF WAY DATA, CONTACT CALTRANS RIGHT OF WAY ENGINEERING AT THE DISTRICT OFFICE.

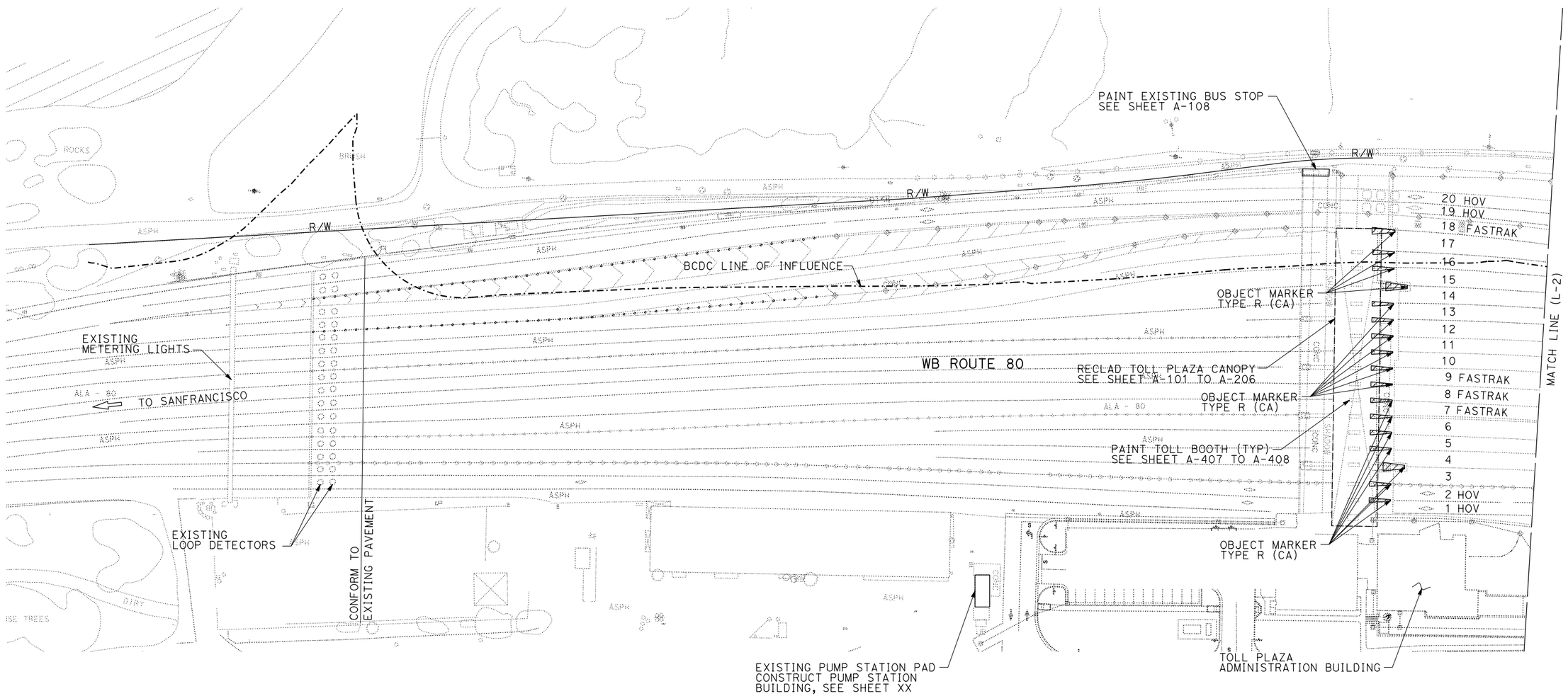

ALL DIMENSIONS ARE IN FEET UNLESS OTHERWISE SHOWN

LAYOUT

SCALE: 1" = 50'

50' 0' 50' 100'

GRAPHIC SCALE

L-1

REVISED BY	DATE REVISED

CHALIT SUNTHUDKARN — CALCULATED-DESIGNED BY
JAMES ZANDIAN — CHECKED BY
FUNCTIONAL SUPERVISOR

STATE OF CALIFORNIA - DEPARTMENT OF TRANSPORTATION

Caltrans

LAST REVISION 00-00-00
DATE PLOTTED => 26-JUN-2012
TIME PLOTTED => 14:26

Dist	COUNTY	ROUTE	POST MILES TOTAL PROJECT	SHEET No.	TOTAL SHEETS
04	Ala	80	2.0/2.3	4	83

REGISTERED CIVIL ENGINEER 06/26/2012 DATE

PLANS APPROVAL DATE

REGISTERED PROFESSIONAL ENGINEER JAMES ZANDIAN No. C 51957 Exp. 6-30-12 CIVIL STATE OF CALIFORNIA

THE STATE OF CALIFORNIA OR ITS OFFICERS OR AGENTS SHALL NOT BE RESPONSIBLE FOR THE ACCURACY OR COMPLETENESS OF SCANNED COPIES OF THIS PLAN SHEET.

Parsons Brinckerhoff
303 Second Street
Suite 700 North
San Francisco, CA 94107-1317

BAY AREA TOLL AUTHORITY
101 EIGHT STREET
OAKLAND, CA 94607

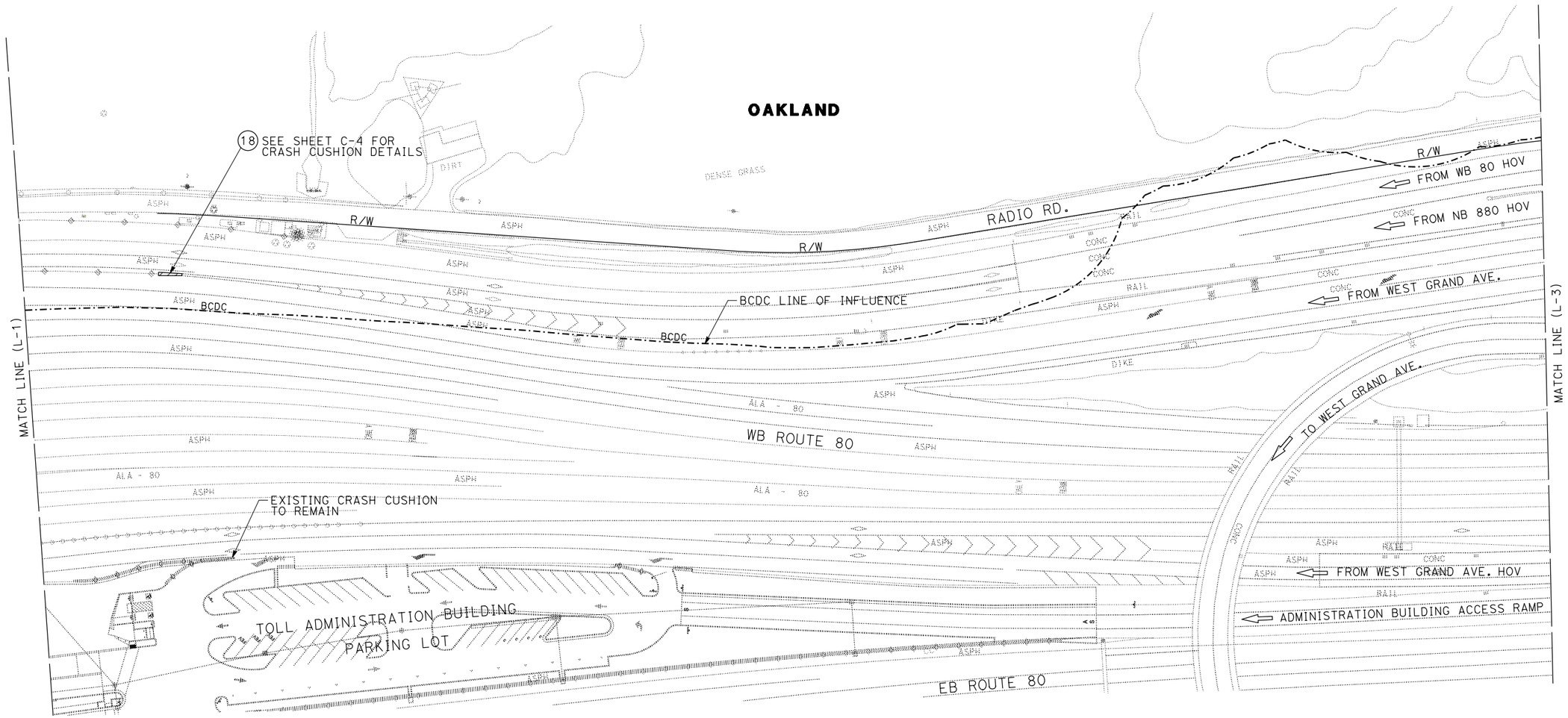

ALL DIMENSIONS ARE IN FEET UNLESS OTHERWISE SHOWN

LAYOUT

SCALE: 1" = 50'

50' 0' 50' 100'

GRAPHIC SCALE

L-2

STATE OF CALIFORNIA - DEPARTMENT OF TRANSPORTATION

Caltrans

FUNCTIONAL SUPERVISOR

CALCULATED-DESIGNED BY CHALIT SUNTHUDKARN

CHECKED BY JAMES ZANDIAN

REVISED BY

DATE REVISED

LAST REVISION 00-00-00

DATE PLOTTED => 26-JUN-2012
TIME PLOTTED => 14:26

Dist	COUNTY	ROUTE	POST MILES TOTAL PROJECT	SHEET No.	TOTAL SHEETS
04	Ala	80	2.0/2.3	5	83

REGISTERED CIVIL ENGINEER 06/26/2012 DATE

PLANS APPROVAL DATE

REGISTERED PROFESSIONAL ENGINEER JAMES ZANDIAN No. C 51957 Exp. 6-30-12 CIVIL STATE OF CALIFORNIA

THE STATE OF CALIFORNIA OR ITS OFFICERS OR AGENTS SHALL NOT BE RESPONSIBLE FOR THE ACCURACY OR COMPLETENESS OF SCANNED COPIES OF THIS PLAN SHEET.

Parsons Brinckerhoff
303 Second Street
Suite 700 North
San Francisco, CA 94107-1317

BAY AREA TOLL AUTHORITY
101 EIGHT STREET
OAKLAND, CA 94607

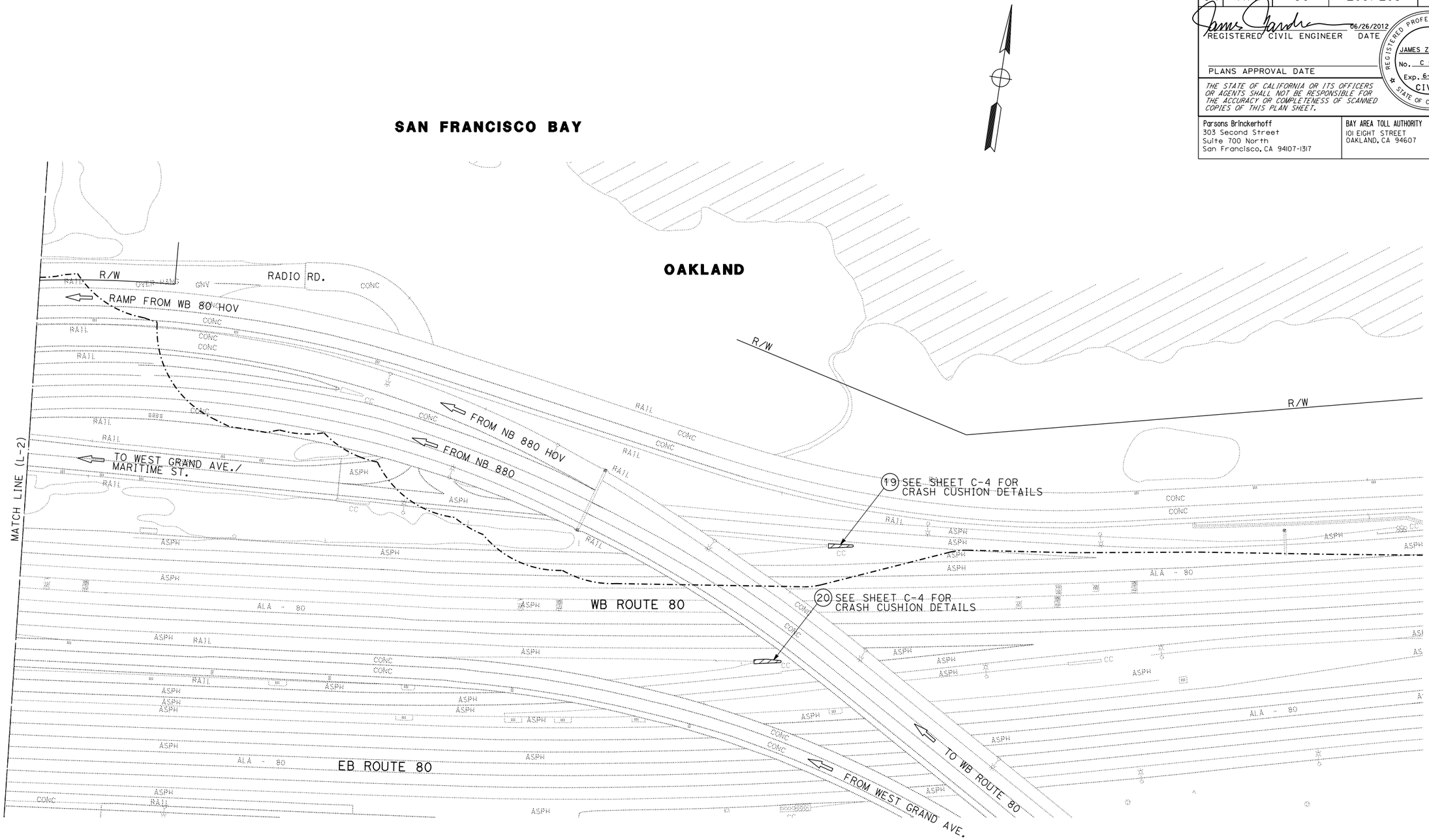

ALL DIMENSIONS ARE IN FEET UNLESS OTHERWISE SHOWN

LAYOUT

SCALE: 1" = 50'

50' 0' 50' 100'

GRAPHIC SCALE

L-3

REVISED BY	DATE REVISED

CALCULATED-DESIGNED BY: CHALIT SUNTHUDKARN
CHECKED BY: JAMES ZANDIAN
FUNCTIONAL SUPERVISOR

STATE OF CALIFORNIA - DEPARTMENT OF TRANSPORTATION
Caltrans

LAST REVISION 00-00-00
DATE PLOTTED => 26-JUN-2012
TIME PLOTTED => 14:26

Dist	COUNTY	ROUTE	POST MILES TOTAL PROJECT	SHEET No.	TOTAL SHEETS
04	Ala	80	2.0/2.3	6	83

REGISTERED CIVIL ENGINEER 06/26/2012 DATE

PLANS APPROVAL DATE

REGISTERED PROFESSIONAL ENGINEER JAMES ZANDIAN No. C 51957 Exp. 6-30-12 CIVIL STATE OF CALIFORNIA

THE STATE OF CALIFORNIA OR ITS OFFICERS OR AGENTS SHALL NOT BE RESPONSIBLE FOR THE ACCURACY OR COMPLETENESS OF SCANNED COPIES OF THIS PLAN SHEET.

Parsons Brinckerhoff
303 Second Street
Suite 700 North
San Francisco, CA 94107-1317

BAY AREA TOLL AUTHORITY
101 EIGHT STREET
OAKLAND, CA 94607

LEGEND:

(1) CRASH CUSHION COUNT

NOTES:

1. REMOVE EXISTING CRASH CUSHION, TYPICAL ALL.
2. CONSTRUCTION CRASH CUSHION SEE CONSTRUCTION DETAIL SHEETS C-2 TO C-5
3. REMOVAL OF CRASH CUSHION SHALL BE PERFORMED WITHOUT DAMAGE TO EXISTING Conc. PAVEMENT.
4. ALL SPALLING CONCRETE SHALL BE REPAIRED AND EXISTING BOLT HOLES FILLED IN.
5. NEW CRASH CUSHION SHALL BE CONSTRUCTED SO THAT NEW HOLES FOR THE SYSTEM TIE DOWN TO NOT FALL WITHIN 3" OF EXISTING HOLES.
6. FIELD VERIFY ALL DIMMENSIONS, AND DETERMINE THAT ADEQUATE CONCRETE PAVEMENT IS AVAILABLE FOR CONSTRUCTING CRASH CUSHION PRIOR TO ORDERING THE MATERIALS.
7. CRASH CUSHION SHALL BE ASSEMBLED & INSTALLED IN ACCORDANCE WITH THE MANUFACTURER SPECIFICATION'S AND LIMITING CONDITION NOTED ON THE APPROVED SHOP DRAWINGS

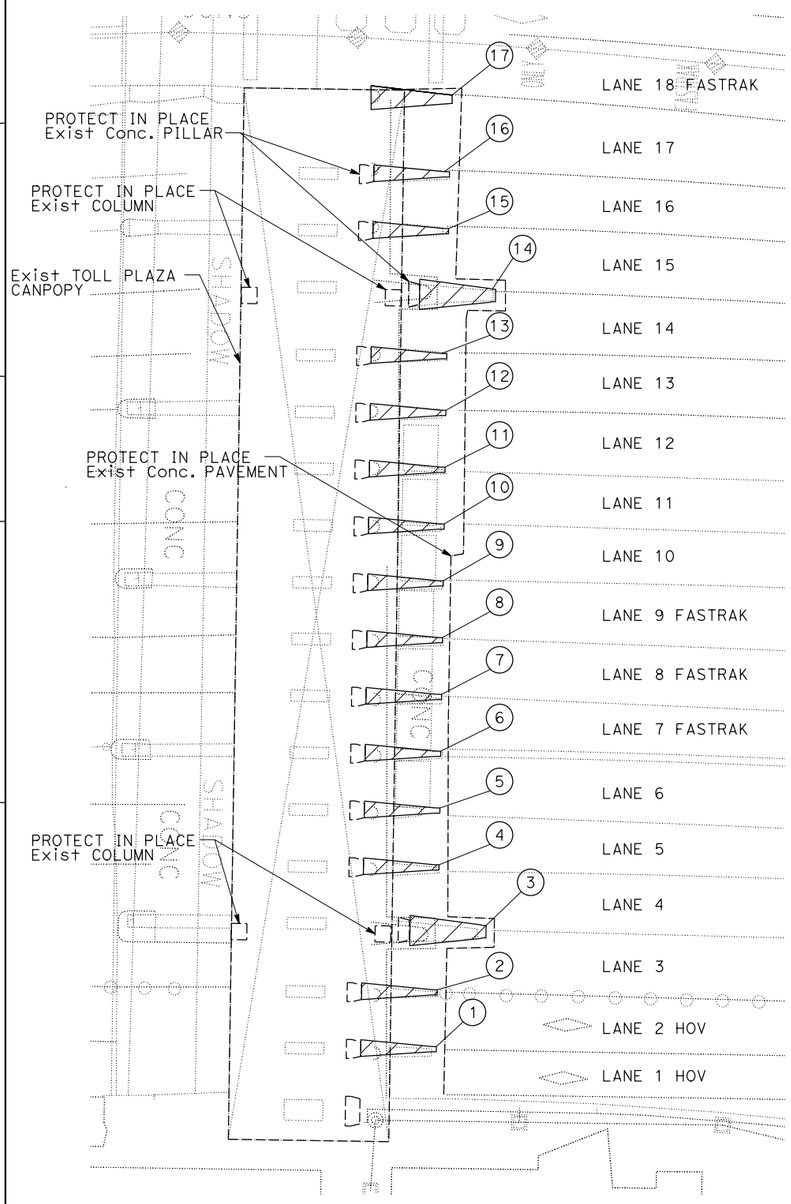

PLAN

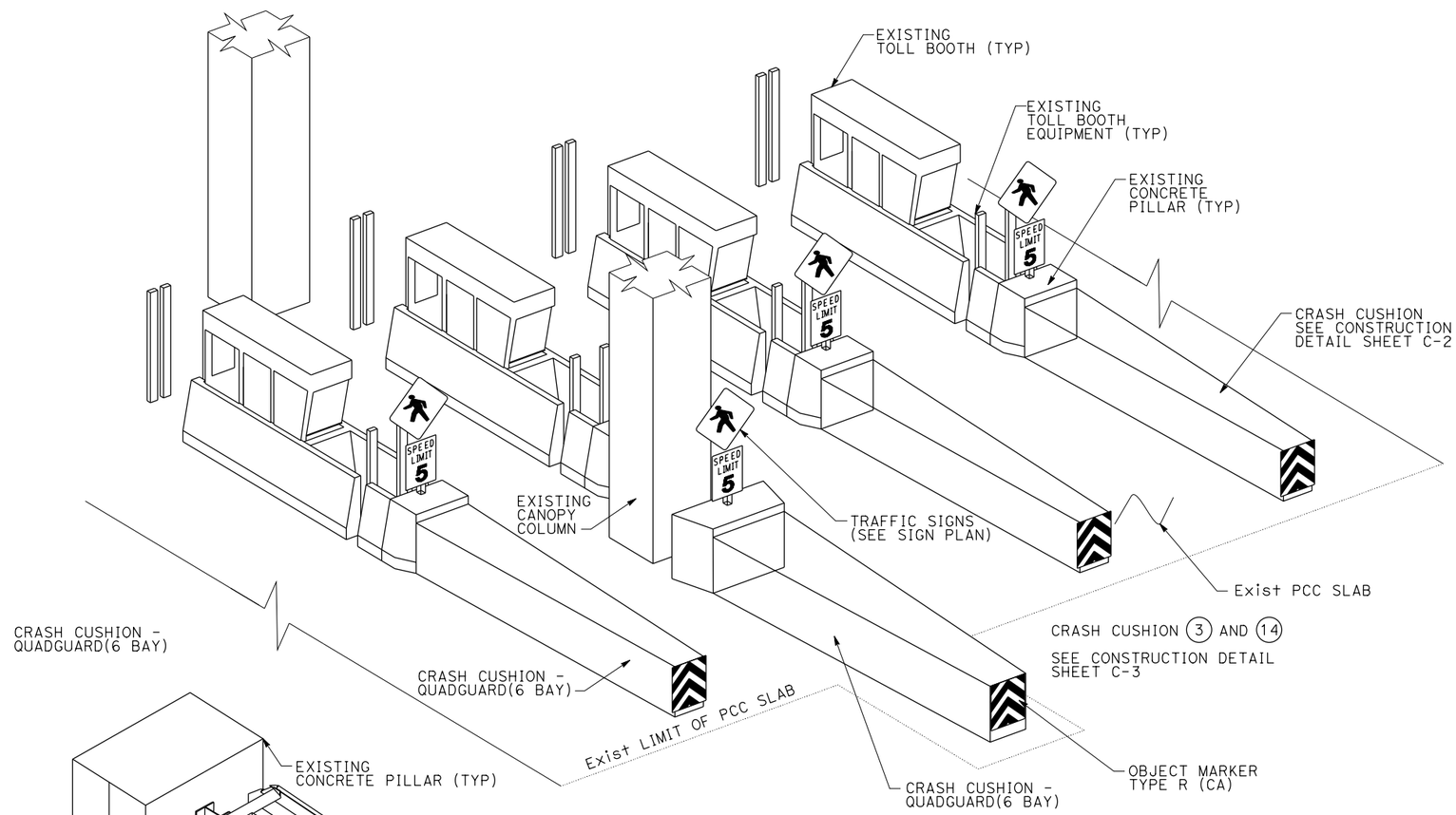

CRASH CUSHION PERSPECTIVE @ TOLL BOOTHS

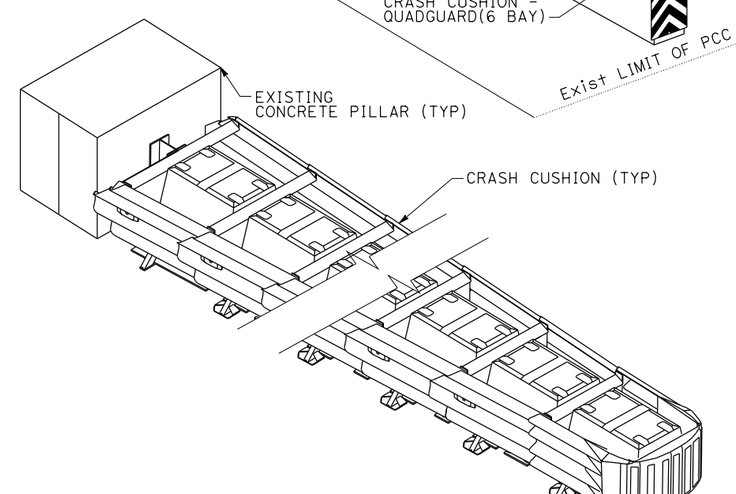

TYPICAL CRASH CUSHION

ALL DIMENSIONS ARE IN FEET UNLESS OTHERWISE SHOWN

CONSTRUCTION DETAILS
CRASH CUSHION LAYOUT

NO SCALE

C-1

STATE OF CALIFORNIA - DEPARTMENT OF TRANSPORTATION

Caltrans

FUNCTIONAL SUPERVISOR | CALCULATED-DESIGNED BY | CHECKED BY | REVISED BY | DATE REVISED

CHALIT SUNTHUDKARN | JAMES ZANDIAN

LAST REVISION 00-00-00 | DATE PLOTTED => 26-JUN-2012 | TIME PLOTTED => 14:26

Dist	COUNTY	ROUTE	POST MILES TOTAL PROJECT	SHEET No.	TOTAL SHEETS
04	Ala	80	2.0/2.3	7	83

REGISTERED CIVIL ENGINEER 06/26/2012 DATE

PLANS APPROVAL DATE

REGISTERED PROFESSIONAL ENGINEER JAMES ZANDIAN No. C 51957 Exp. 6-30-12 CIVIL STATE OF CALIFORNIA

THE STATE OF CALIFORNIA OR ITS OFFICERS OR AGENTS SHALL NOT BE RESPONSIBLE FOR THE ACCURACY OR COMPLETENESS OF SCANNED COPIES OF THIS PLAN SHEET.

Parsons Brinckerhoff
303 Second Street
Suite 700 North
San Francisco, CA 94107-1317

BAY AREA TOLL AUTHORITY
101 EIGHT STREET
OAKLAND, CA 94607

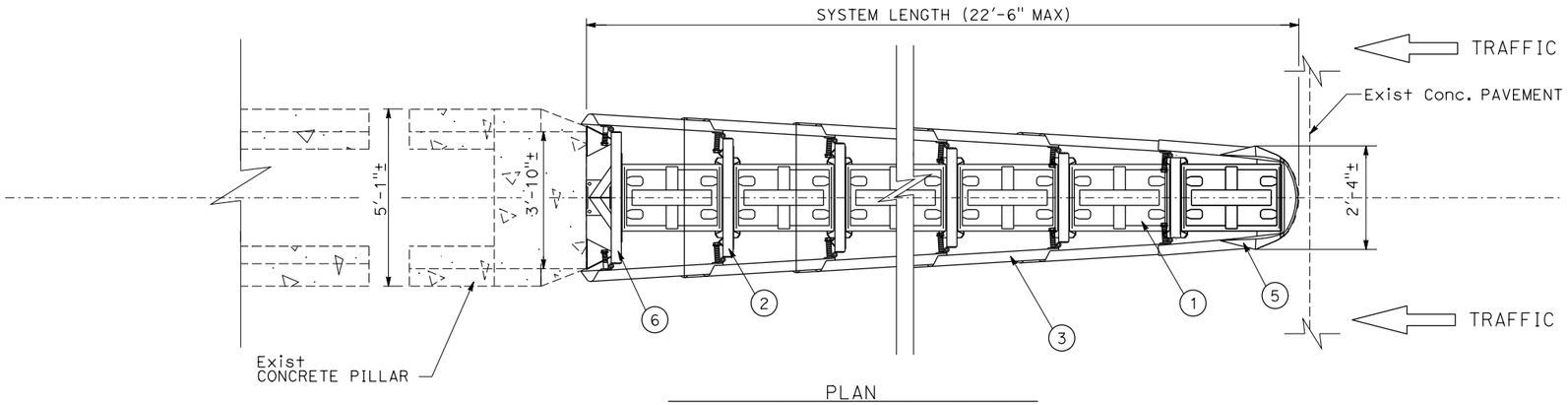

PLAN
LOCATION 1, 2, 4-13 AND 15-17

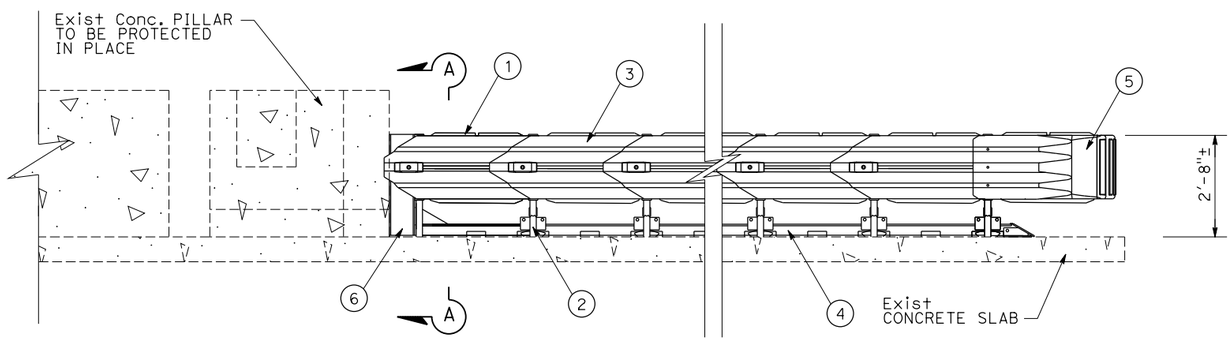

ELEVATION

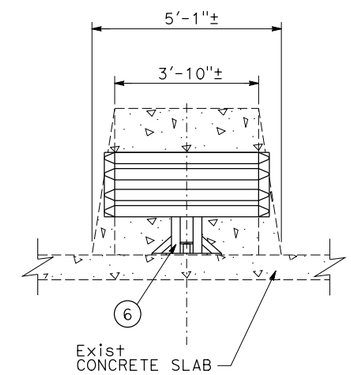

SECTION A-A

NOTES:

1. SEE THE "QUADGUARD SYSTEM PRODUCT MANUAL", FOR A DESCRIPTION OF ITS IMPACT PERFORMANCE CHARACTERISTICS AND DESIGN LIMITATIONS BEFORE PLACING A SYSTEM AT A GIVEN SITE. INFORMATION AND COPIES OF ABOVE MANUAL ARE AVAILABLE BY CALLING CUSTOMER SERVICE DEPARTMENT AT (312) 467-6750.
2. WHERE NECESSARY, THE CONTRACTOR SHALL SUPPLY A TRANSITION FROM THE QUADGUARD SYSTEM TO THE OBJECT BEING SHIELDED.
3. BACKUP & TRANSITION ASSEMBLIES NOT INCLUDED IN MODEL NUMBER.
4. THE SYSTEM LENGTH INDICATED IS BASED UPON CALCULATED VALUES FOR 4410 lbs VEHICLES TRAVELING AT THE SPEEDS UP TO 62 MPH AND HAVING ENOUGH CAPACITY TO DISSIPATE THE VEHICLES LONGITUDINAL IMPACT ENERGY.

KEY:

1. QUADGUARD CARTRIDGE
2. DIAPHRAGM
3. FENDER PANEL
4. MONORAIL
5. NOSE ASSEMBLY
6. BACKUP ASSEMBLY (SEE SHEET C-4)

ALL DIMENSIONS ARE IN FEET UNLESS OTHERWISE SHOWN

CONSTRUCTION DETAILS
TOLL BOOTH QUADGUARD(6 BAY) DETAILS

NO SCALE

C-2

STATE OF CALIFORNIA - DEPARTMENT OF TRANSPORTATION

Caltrans

FUNCTIONAL SUPERVISOR

CALCULATED-DESIGNED BY CHALIT SUNTHUDKARN

CHECKED BY JAMES ZANDIAN

REVISED BY

DATE REVISED

LAST REVISION 00-00-00

DATE PLOTTED => 26-JUN-2012
TIME PLOTTED => 14:26

Dist	COUNTY	ROUTE	POST MILES TOTAL PROJECT	SHEET No.	TOTAL SHEETS
04	Ala	80	2.0/2.3	8	83

REGISTERED CIVIL ENGINEER 06/26/2012 DATE

PLANS APPROVAL DATE

REGISTERED PROFESSIONAL ENGINEER JAMES ZANDIAN No. C 51957 Exp. 6-30-12 CIVIL STATE OF CALIFORNIA

THE STATE OF CALIFORNIA OR ITS OFFICERS OR AGENTS SHALL NOT BE RESPONSIBLE FOR THE ACCURACY OR COMPLETENESS OF SCANNED COPIES OF THIS PLAN SHEET.

Parsons Brinckerhoff
303 Second Street
Suite 700 North
San Francisco, CA 94107-1317

BAY AREA TOLL AUTHORITY
101 EIGHT STREET
OAKLAND, CA 94607

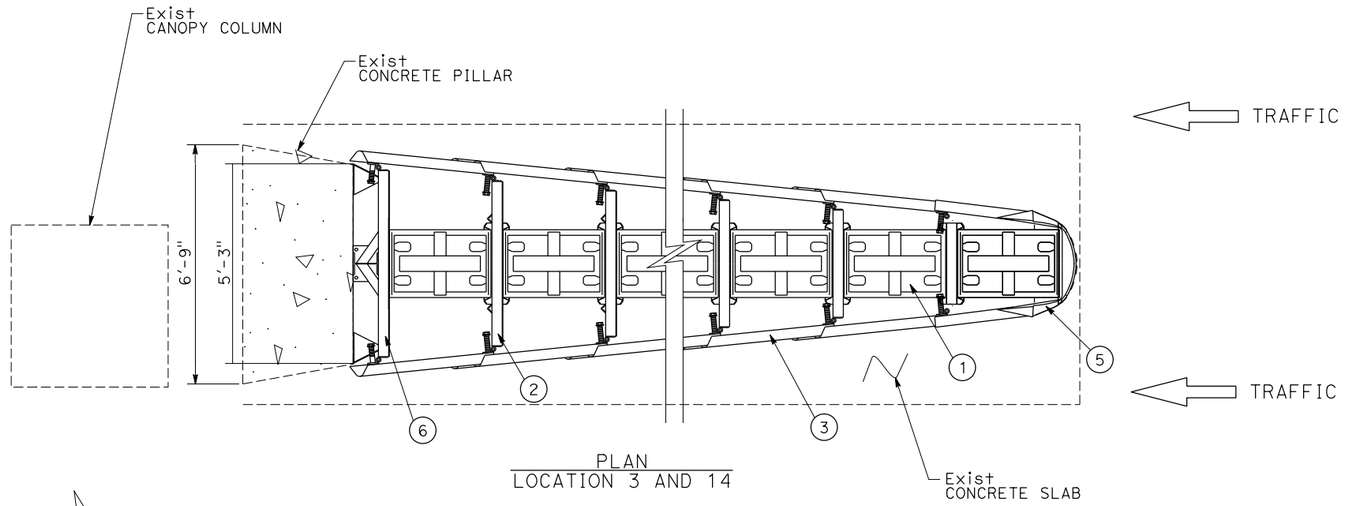

PLAN
LOCATION 3 AND 14

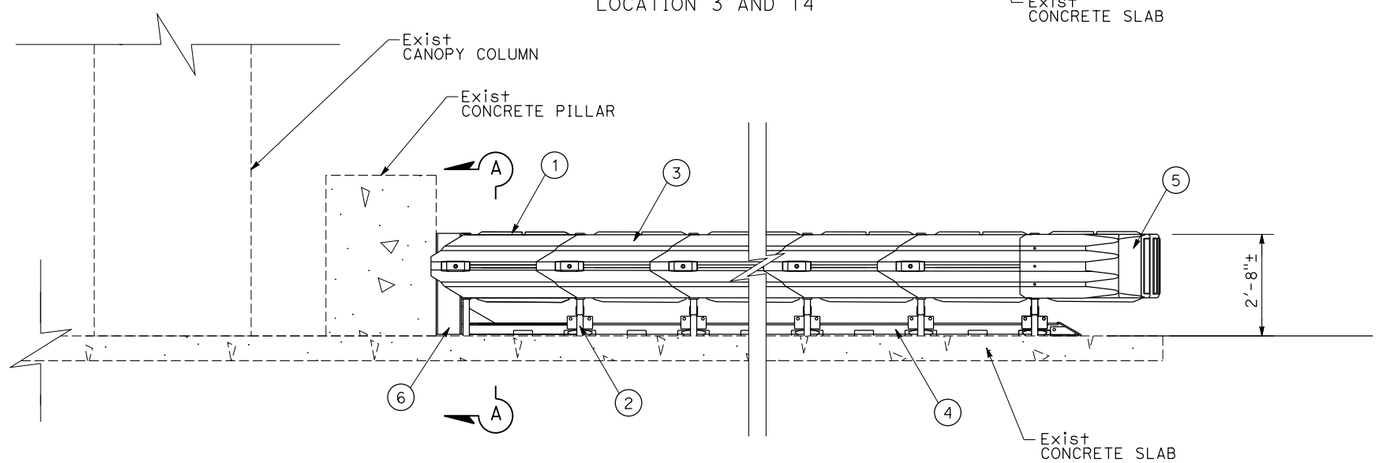

ELEVATION

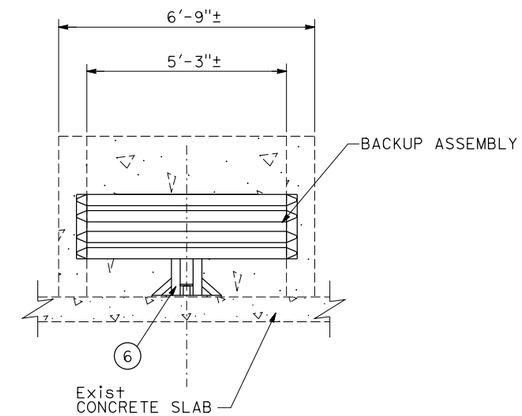

SECTION A-A

NOTES:

1. SEE THE "QUADGUARD SYSTEM PRODUCT MANUAL", FOR A DESCRIPTION OF ITS IMPACT PERFORMANCE CHARACTERISTICS AND DESIGN LIMITATIONS BEFORE PLACING A SYSTEM AT A GIVEN SITE. INFORMATION AND COPIES OF ABOVE MANUAL ARE AVAILABLE BY CALLING CUSTOMER SERVICE DEPARTMENT AT (312) 467-6750.
2. WHERE NECESSARY, THE CONTRACTOR SHALL SUPPLY A TRANSITION FROM THE QUADGUARD SYSTEM TO THE OBJECT BEING SHIELDED.
3. BACKUP & TRANSITION ASSEMBLIES NOT INCLUDED IN MODEL NUMBER.
4. THE SYSTEM LENGTH INDICATED IS BASED UPON CALCULATED VALUES FOR 4410 lbs VEHICLES TRAVELING AT THE SPEEDS UP TO 62 MPH AND HAVING ENOUGH CAPACITY TO DISSIPATE THE VEHICLES LONGITUDINAL IMPACT ENERGY.

KEY:

1. QUADGUARD CARTRIDGE
2. DIAPHRAGM
3. FENDER PANEL
4. MONORAIL
5. NOSE ASSEMBLY
6. BACKUP ASSEMBLY (SEE SHEET C-4)

ALL DIMENSIONS ARE IN FEET UNLESS OTHERWISE SHOWN

CONSTRUCTION DETAILS
TOLL BOOTH QUADGUARD DETAILS

NO SCALE

C-3

STATE OF CALIFORNIA - DEPARTMENT OF TRANSPORTATION

Caltrans

CALCULATED-DESIGNED BY	CHALIT SUNTHUDKARN	REVISED BY
CHECKED BY	JAMES ZANDIAN	DATE REVISED

FUNCTIONAL SUPERVISOR

LAST REVISION 00-00-00 | DATE PLOTTED => 26-JUN-2012 | TIME PLOTTED => 14:26

Dist	COUNTY	ROUTE	POST MILES TOTAL PROJECT	SHEET No.	TOTAL SHEETS
04	Ala	80	2.0/2.3	9	83

REGISTERED CIVIL ENGINEER 06/26/2012 DATE

PLANS APPROVAL DATE

REGISTERED PROFESSIONAL ENGINEER JAMES ZANDIAN No. C 51957 Exp. 6-30-12 CIVIL STATE OF CALIFORNIA

THE STATE OF CALIFORNIA OR ITS OFFICERS OR AGENTS SHALL NOT BE RESPONSIBLE FOR THE ACCURACY OR COMPLETENESS OF SCANNED COPIES OF THIS PLAN SHEET.

Parsons Brinckerhoff
303 Second Street
Suite 700 North
San Francisco, CA 94107-1317

BAY AREA TOLL AUTHORITY
101 EIGHT STREET
OAKLAND, CA 94607

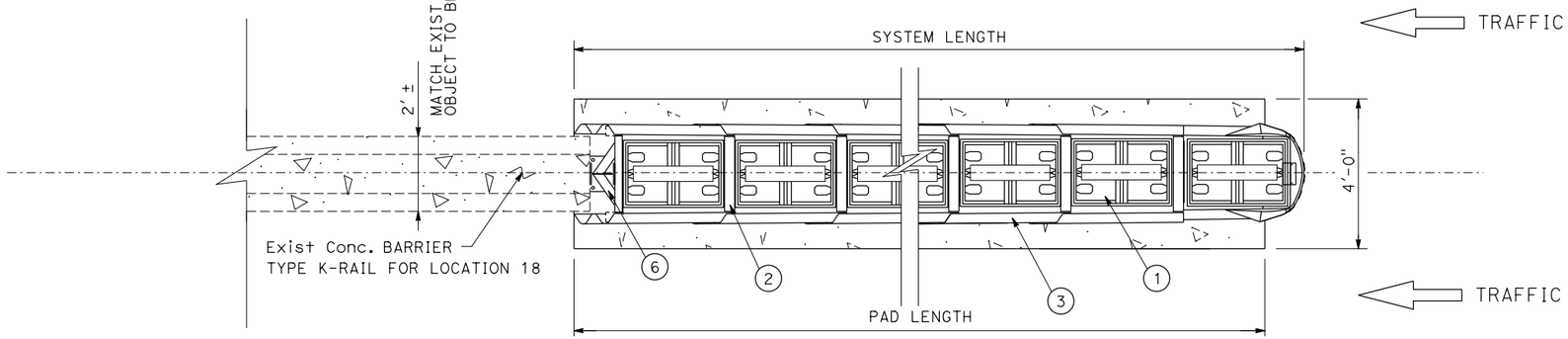

PLAN
LOCATION 18-20

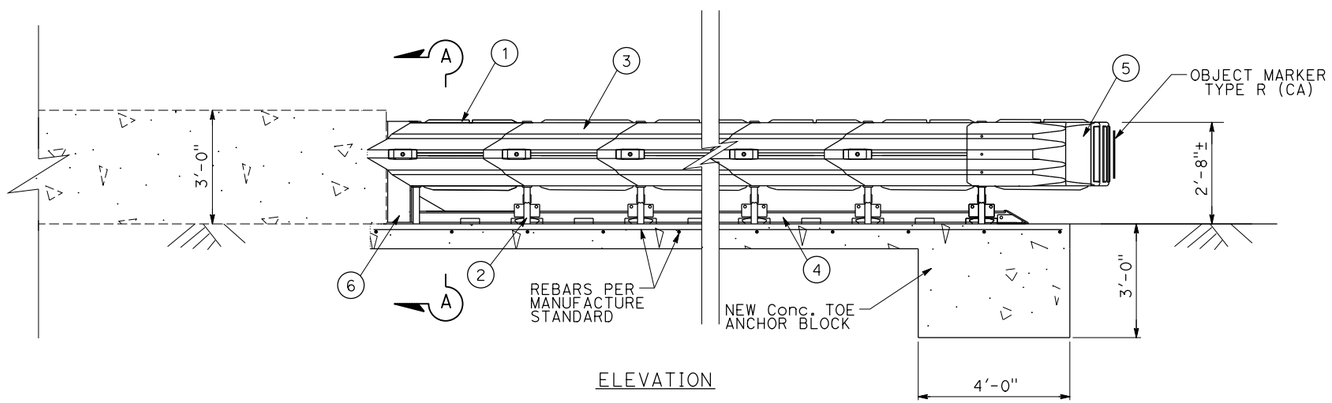

ELEVATION

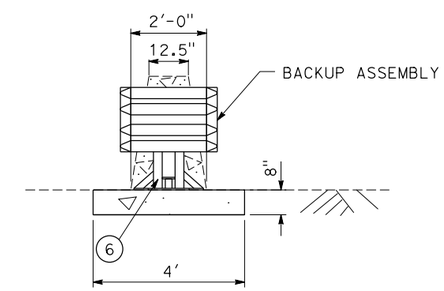

SECTION A-A

NOTES:

1. 150 [6.00] MIN. REINFORCED 28 MPa [4000 PSI] P.C. CONCRETE PAD OR 200 [8.00] MIN. NON-REINFORCED 28 MPa [4000 PSI] P.C. CONCRETE ROADWAY.
2. SEE THE "QUADGUARD SYSTEM PRODUCT MANUAL", FOR A DESCRIPTION OF ITS IMPACT PERFORMANCE CHARACTERISTICS AND DESIGN LIMITATIONS BEFORE PLACING A SYSTEM AT A GIVEN SITE. INFORMATION AND COPIES OF ABOVE MANUAL ARE AVAILABLE BY CALLING CUSTOMER SERVICE DEPARTMENT AT (312) 467-6750.
3. WHERE NECESSARY, THE CONTRACTOR SHALL SUPPLY A TRANSITION FROM THE QUADGUARD SYSTEM TO THE OBJECT BEING SHIELDED.
4. BACKUP & TRANSITION ASSEMBLIES NOT INCLUDED IN MODEL NUMBER.
5. THE SYSTEM LENGTH INDICATED IS BASED UPON CALCULATED VALUES FOR 4410 lbs VEHICLES TRAVELING AT THE SPEEDS UP TO 62 MPH AND HAVING ENOUGH CAPACITY TO DISSIPATE THE VEHICLES LONGITUDINAL IMPACT ENERGY.

KEY:

1. QUADGUARD CARTRIDGE
2. DIAPHRAGM
3. FENDER PANEL
4. MONORAIL
5. NOSE ASSEMBLY
6. BACKUP ASSEMBLY (SEE SHEET C-4)

ALL DIMENSIONS ARE IN FEET UNLESS OTHERWISE SHOWN

CONSTRUCTION DETAILS
BARRIER QUADGUARD DETAILS

NO SCALE

C-4

STATE OF CALIFORNIA - DEPARTMENT OF TRANSPORTATION

Caltrans

FUNCTIONAL SUPERVISOR

CALCULATED-DESIGNED BY CHALIT SUNTHUDKARN

CHECKED BY JAMES ZANDIAN

REVISED BY

DATE REVISED

LAST REVISION 00-00-00

DATE PLOTTED => 26-JUN-2012

TIME PLOTTED => 14:26

Dist	COUNTY	ROUTE	POST MILES TOTAL PROJECT	SHEET No.	TOTAL SHEETS
04	Ala	80	2.0/2.3	10	83

REGISTERED CIVIL ENGINEER DATE 06/26/2012

PLANS APPROVAL DATE

REGISTERED PROFESSIONAL ENGINEER JAMES ZANDIAN No. C 51957 Exp. 6-30-12 CIVIL STATE OF CALIFORNIA

THE STATE OF CALIFORNIA OR ITS OFFICERS OR AGENTS SHALL NOT BE RESPONSIBLE FOR THE ACCURACY OR COMPLETENESS OF SCANNED COPIES OF THIS PLAN SHEET.

Parsons Brinckerhoff
303 Second Street
Suite 700 North
San Francisco, CA 94107-1317

BAY AREA TOLL AUTHORITY
101 EIGHT STREET
OAKLAND, CA 94607

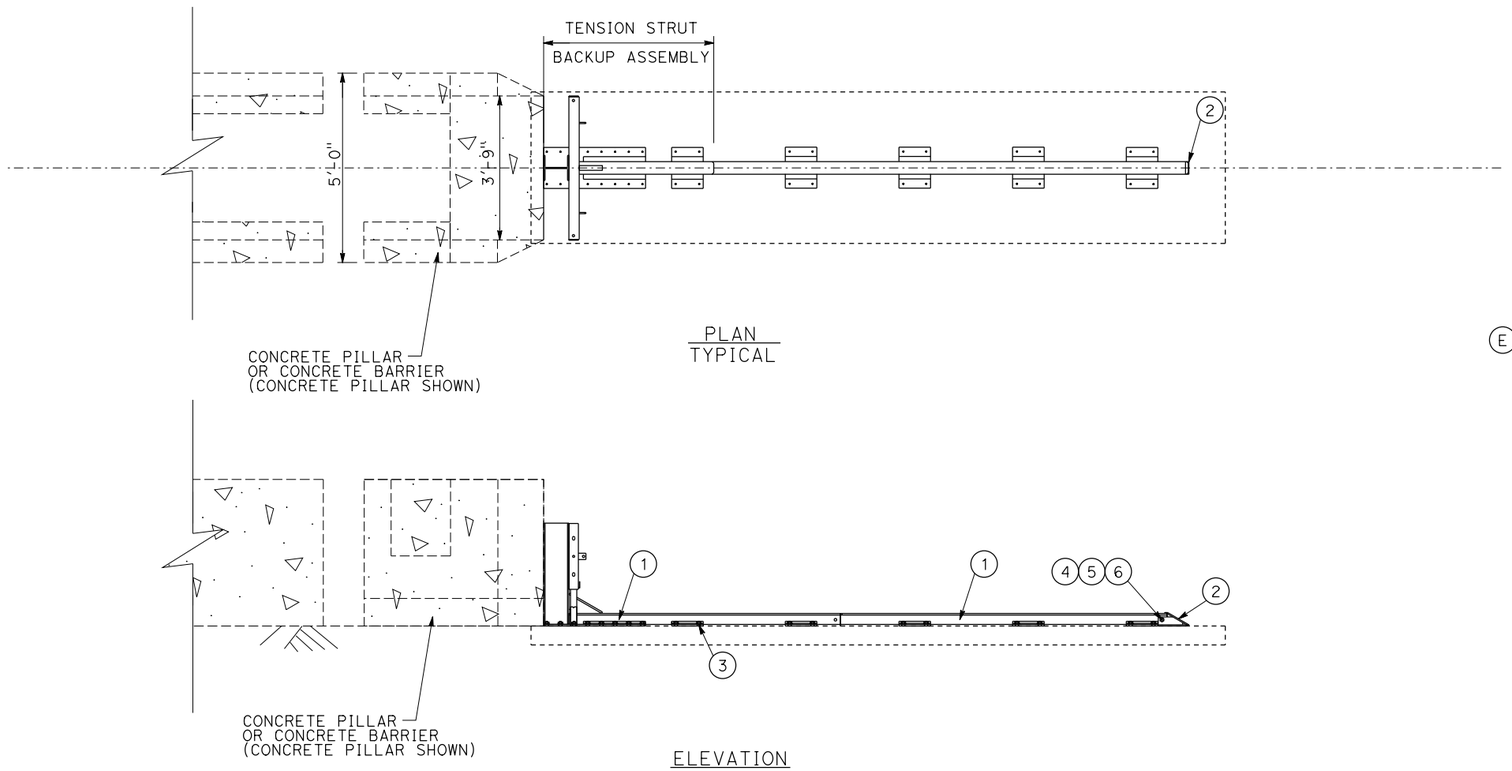

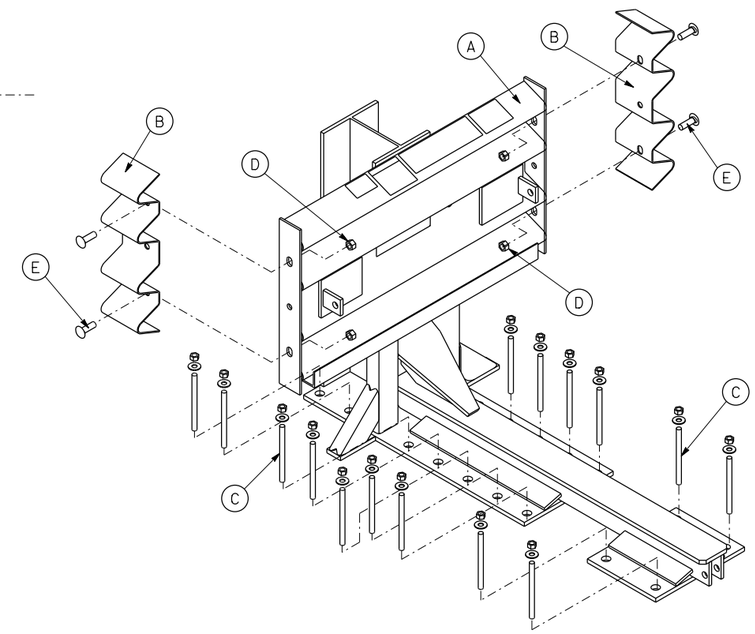

BACKUP ASSEMBLY

NOTES:

1. USE MONORAILS (ITEM 1) AS TEMPLATES TO LOCATE MP-3 ANCHOR BOLTS (ITEM 3).
2. CROSS SLOPE OF PAD SHALL NOT EXCEED 8 % & NOT VARY MORE THAN 2% FROM FRONT TO BACK.
3. UNITS OF MEASUREMENT ARE MILLIMETERS [INCHES] UNLESS OTHERWISE NOTED.
4. EVERY STUD MUST BE EMBEDDED TO A DEPTH OF 140 [5.5]. IF REBAR IS ENCOUNTERED IN A P.C. CONCRETE PAD, DRILL THROUGH IT. IF REBAR IS ENCOUNTERED ON A DECK STRUCTURE, DO NOT DRILL THROUGH REBAR WITHOUT FIRST GETTING PERMISSION FROM A PROJECT ENGINEER.

KEY:

1	MONORAIL	A	BACKUP, TS
2	END CAP, MONORAIL	B	PANEL, SIDE
3	ANCHOR	C	ANCHOR
4	BOLT	D	NUT
5	NUT	E	BOLT
6	WASHER, LOCK		

ALL DIMENSIONS ARE IN FEET UNLESS OTHERWISE SHOWN

CONSTRUCTION DETAILS
CRASH CUSHION BACKUP ASSEMBLY

NO SCALE

C-5

STATE OF CALIFORNIA - DEPARTMENT OF TRANSPORTATION

Caltrans

FUNCTIONAL SUPERVISOR

CALCULATED-DESIGNED BY CHALIT SUNTHUDKARN

CHECKED BY JAMES ZANDIAN

REVISED BY

DATE REVISED

LAST REVISION 00-00-00

DATE PLOTTED => 26-JUN-2012
TIME PLOTTED => 14:26

Dist	COUNTY	ROUTE	POST MILES TOTAL PROJECT	SHEET No.	TOTAL SHEETS
04	Ala	80	2.0/2.3	11	83

REGISTERED CIVIL ENGINEER 06/26/2012 DATE

PLANS APPROVAL DATE

REGISTERED PROFESSIONAL ENGINEER JAMES ZANDIAN No. C 51957 Exp. 6-30-12 CIVIL STATE OF CALIFORNIA

THE STATE OF CALIFORNIA OR ITS OFFICERS OR AGENTS SHALL NOT BE RESPONSIBLE FOR THE ACCURACY OR COMPLETENESS OF SCANNED COPIES OF THIS PLAN SHEET.

Parsons Brinckerhoff
303 Second Street
Suite 700 North
San Francisco, CA 94107-1317

BAY AREA TOLL AUTHORITY
101 EIGHT STREET
OAKLAND, CA 94607

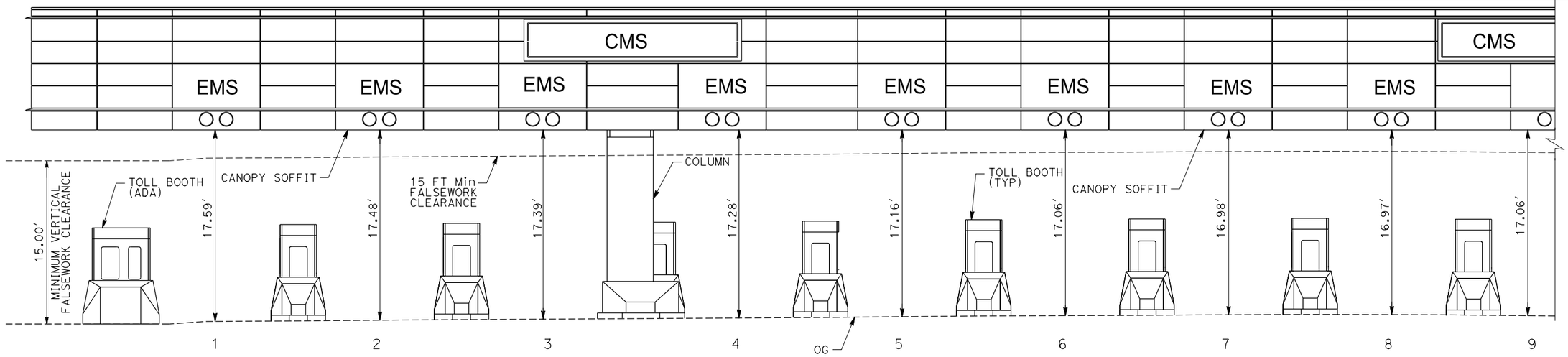

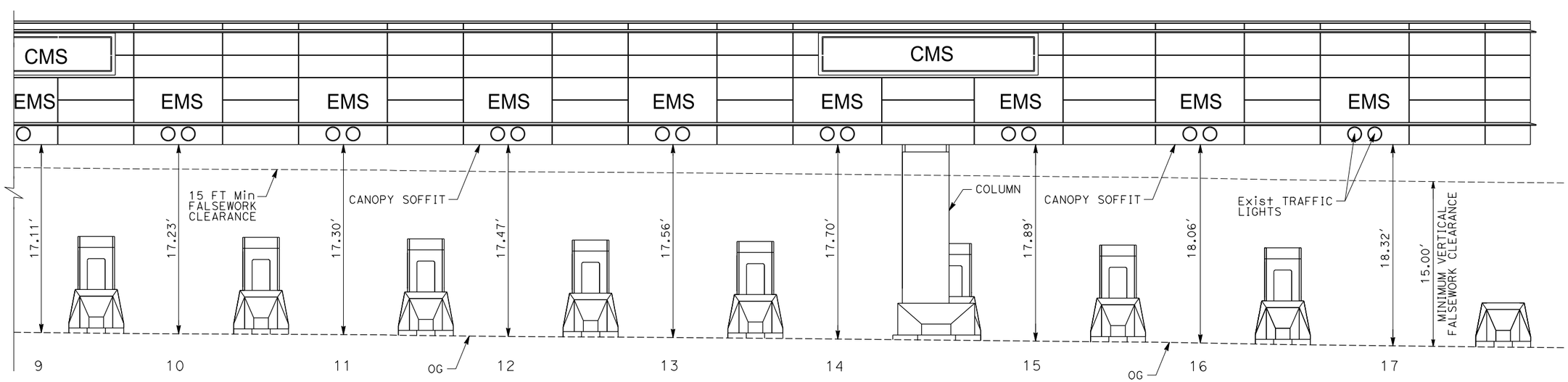

VERTICAL CLEARANCE
EXISTING EAST ELEVATION

ALL DIMENSIONS ARE IN FEET UNLESS OTHERWISE SHOWN

CONSTRUCTION DETAILS
VERTICAL CLEARANCE
NO SCALE

C-6

REVISED BY	DATE REVISED

CHALIT SUNTHUDKARN — JAMES ZANDIAN

CALCULATED-DESIGNED BY — CHECKED BY

FUNCTIONAL SUPERVISOR

STATE OF CALIFORNIA - DEPARTMENT OF TRANSPORTATION

Caltrans

LAST REVISION 00-00-00 | DATE PLOTTED => 26-JUN-2012 | TIME PLOTTED => 14:26

Dist	COUNTY	ROUTE	POST MILES TOTAL PROJECT	SHEET No.	TOTAL SHEETS
04	Ala	80	2.0/2.3	12	83

REGISTERED CIVIL ENGINEER 06/26/2012 DATE

PLANS APPROVAL DATE

REGISTERED PROFESSIONAL ENGINEER JAMES ZANDIAN No. C 51957 Exp. 6-30-12 CIVIL STATE OF CALIFORNIA

THE STATE OF CALIFORNIA OR ITS OFFICERS OR AGENTS SHALL NOT BE RESPONSIBLE FOR THE ACCURACY OR COMPLETENESS OF SCANNED COPIES OF THIS PLAN SHEET.

Parsons Brinckerhoff
303 Second Street
Suite 700 North
San Francisco, CA 94107-1317

BAY AREA TOLL AUTHORITY
101 EIGHT STREET
OAKLAND, CA 94607

LEGEND:

CONSTRUCTION AREA SIGN

(X) CONSTRUCTION AREA SIGN No.

NOTES:

1. LOCATION OF CONSTRUCTION AREA SIGNS ARE APPROXIMATE. EXACT LOCATIONS WILL BE DETERMINED BY THE ENGINEER.
2. CMS MESSAGES AND LOCATIONS TO BE DETERMINED BY THE RESIDENT ENGINEER IN ACCORDANCE WITH CALTRANS DISTRICT 4 "SUMMARY GUIDELINES FOR USAGE OF CMS"

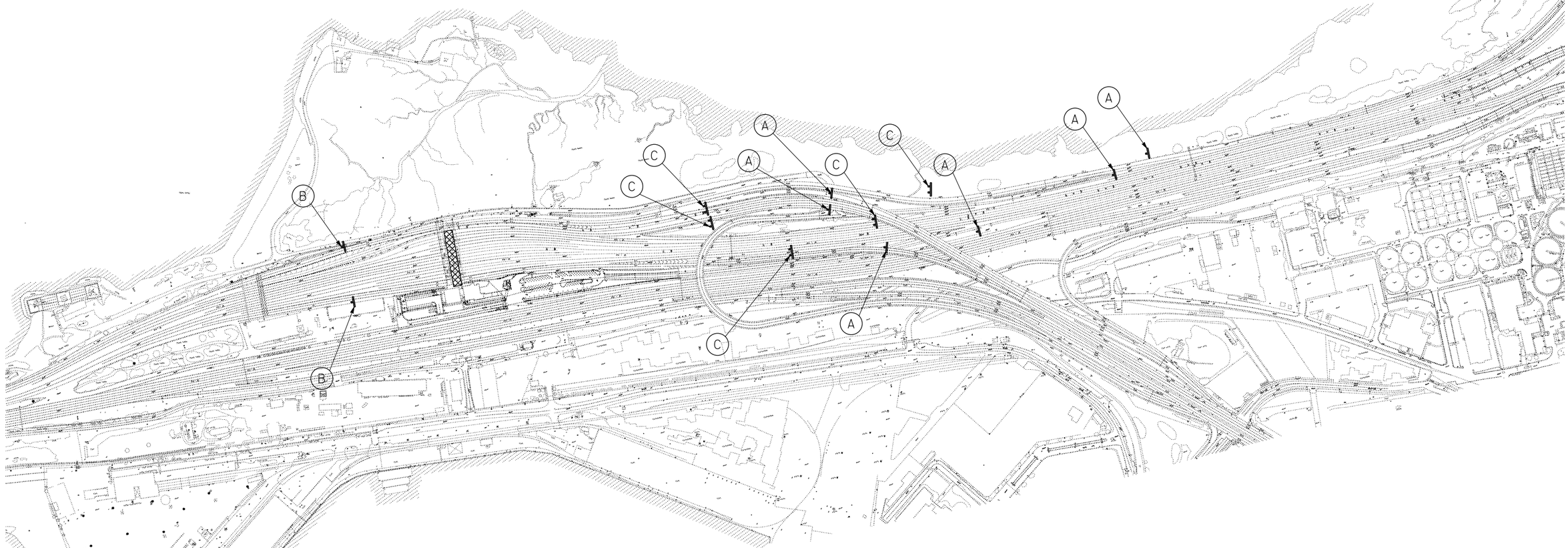

STATIONARY MOUNTED CONSTRUCTION AREA SIGNS

SIGN No. (X)	SIGN CODE		PANEL SIZE	SIGN MESSAGE	NUMBER OF POSTS AND SIZE	NUMBER OF SIGNS
	FEDERAL	CALIFORNIA				
A	W20-1		60" x 60"	ROAD WORK AHEAD	2 - 4" x 6"	5
B	G20-2		36" x 18"	END ROAD WORK	1 - 4" x 4"	2
C		C40	108" x 42"	TRAFFIC FINES DOUBLED IN CONSTRUCTION ZONES	2 - 4" x 6"	2

CONSTRUCTION AREA SIGN

NO SCALE

CS-1

STATE OF CALIFORNIA - DEPARTMENT OF TRANSPORTATION

Caltrans

FUNCTIONAL SUPERVISOR

CALCULATED-DESIGNED BY CHALIT SUNTHUDKARN

CHECKED BY JAMES ZANDIAN

REVISED BY

DATE REVISED

LAST REVISION 00-00-00

DATE PLOTTED => 26-JUN-2012

TIME PLOTTED => 14:27

Dist	COUNTY	ROUTE	POST MILES TOTAL PROJECT	SHEET No.	TOTAL SHEETS
04	Ala	80	2.0/2.3	13	83

REGISTERED CIVIL ENGINEER 06/26/2012 DATE

PLANS APPROVAL DATE

REGISTERED PROFESSIONAL ENGINEER JAMES ZANDIAN No. C 51957 Exp. 6-30-12 CIVIL STATE OF CALIFORNIA

THE STATE OF CALIFORNIA OR ITS OFFICERS OR AGENTS SHALL NOT BE RESPONSIBLE FOR THE ACCURACY OR COMPLETENESS OF SCANNED COPIES OF THIS PLAN SHEET.

Parsons Brinckerhoff
303 Second Street
Suite 700 North
San Francisco, CA 94107-1317

BAY AREA TOLL AUTHORITY
101 EIGHT STREET
OAKLAND, CA 94607

LEGEND:

CONTRACTOR LAYDOWN AREA

TEMPORARY FENCE

NOTES:

1. CONTRACTOR SHALL PLACE FENCE AROUND THE LAYDOWN AREA.
2. ACCESS TO TOLL PLAZA BUILDING SHALL REMAIN OPEN AT ALL TIMES.
3. ACCESS TO THE IN-USE TOLL PLAZA PARKING SHALL REMAIN OPEN AT ALL TIMES.
4. CONSTRUCTION ACCESS IS SHOWN ON THE DRAWINGS.
5. TEMPORARY FENCE SHALL BE OF TYPE THAT DOES NOT REQUIRE DRILLING FOR POSTS. NO DRILLING FOR FENCE POSTS WILL BE ALLOWED UNLESS OTHERWISE APPROVED BY THE ENGINEER IN WRITTING.

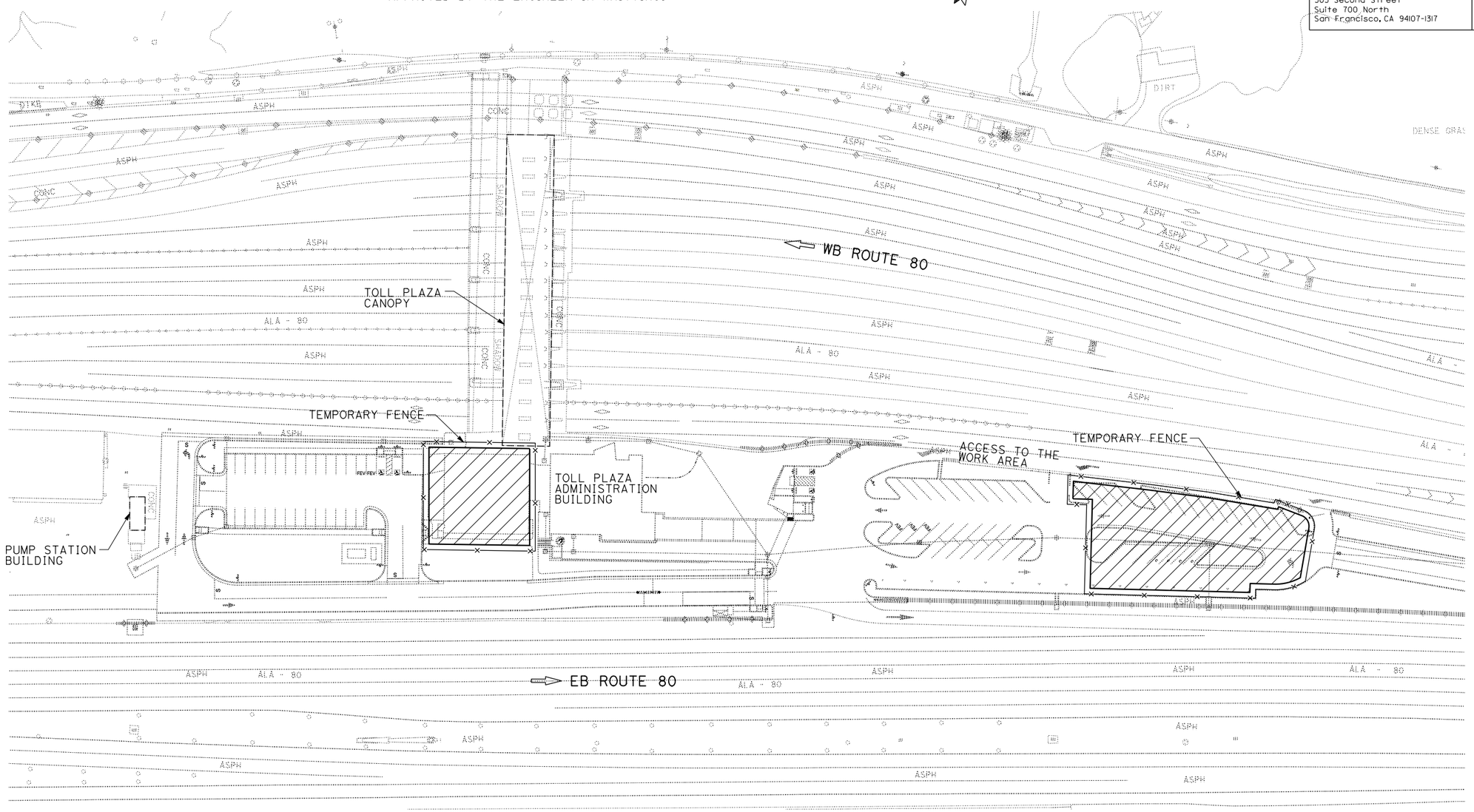

ALL DIMENSIONS ARE IN FEET UNLESS OTHERWISE SHOWN

CONTRACTOR LAYDOWN AREA

SCALE: 1" = 50'

50' 0' 50' 100'

GRAPHIC SCALE

SC-1

STATE OF CALIFORNIA - DEPARTMENT OF TRANSPORTATION

Caltrans

FUNCTIONAL SUPERVISOR

CALCULATED-DESIGNED BY CHALIT SUNTHUDKARN

CHECKED BY JAMES ZANDIAN

REVISED BY

DATE REVISED

LAST REVISION 00-00-00

DATE PLOTTED => 26-JUN-2012

TIME PLOTTED => 14:27

Dist	COUNTY	ROUTE	POST MILES TOTAL PROJECT	SHEET No.	TOTAL SHEETS
04	Ala	80	2.0/2.3	14	83

REGISTERED CIVIL ENGINEER 06/26/2012 DATE

PLANS APPROVAL DATE

REGISTERED PROFESSIONAL ENGINEER JAMES ZANDIAN No. C 51957 Exp. 6-30-12 CIVIL STATE OF CALIFORNIA

THE STATE OF CALIFORNIA OR ITS OFFICERS OR AGENTS SHALL NOT BE RESPONSIBLE FOR THE ACCURACY OR COMPLETENESS OF SCANNED COPIES OF THIS PLAN SHEET.

Parsons Brinckerhoff
303 Second Street
Suite 700 North
San Francisco, CA 94107-1317

BAY AREA TOLL AUTHORITY
101 EIGHT STREET
OAKLAND, CA 94607

LEGEND:

- CONSTRUCT SCAFFOLDS AND PORTIONS OF CANOPY
- REMOVE AND REPLACE CRASH CUSHIONS/ PAINT TOLL BOOTHS, ISLANDS, STAIRS AND WALLS
- (STX) CONSTRUCTION STAGE
- (X) CRASH CUSHION NUMBER

NOTES:

1. CONTRACTOR SHALL PROVIDE TRAFFIC CONTROL PLANS FOR TEMPORARY LANE CLOSURE REQUIRED AS DIRECTED BY ENGINEER.
2. SEE ARCHITECTURAL SHEET A-003 FOR CANOPY RECLADDING CONSTRUCTION SEQUENCE.
3. SEE SPECIFICATIONS FOR LANE CLOSURE SCHEDULE.
4. LANE CLOSURE SHALL BE IN ACCORDANCE WITH THE CONTRACT SPECIFICATIONS.

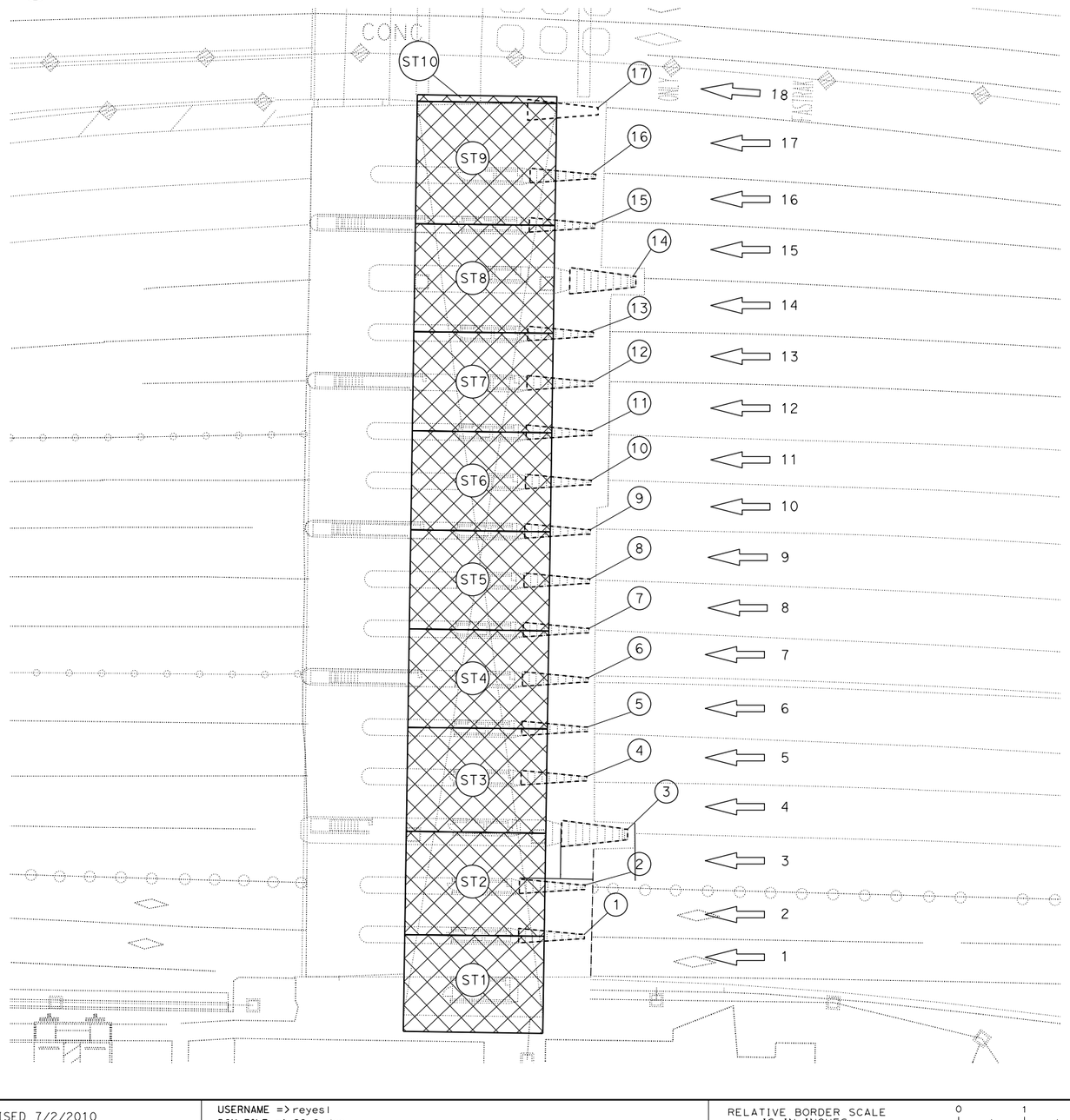

TRAFFIC HANDLING	CONSTRUCTION
STAGE 1 1. CLOSE LANE 1 AND 2 TO TRAFFIC.	1. CONSTRUCT/RECLAD CANOPY.
STAGE 2 1. CLOSE LANE 1 TO 4 TO TRAFFIC.	1. CONSTRUCT/RECLAD CANOPY 2. REMOVE AND REPLACE CRASH CUSHION (1) (2) (3)
STAGE 3 1. OPEN LANE 1 AND 2 TO TRAFFIC. 2. CLOSE LANE 3 TO 6 TO TRAFFIC.	1. CONSTRUCT/RECLAD CANOPY 2. REMOVE AND REPLACE CRASH CUSHION (4) (5)
STAGE 4 1. OPEN LANE 3 AND 4 TO TRAFFIC. 2. CLOSE LANE 5 TO 8 TO TRAFFIC.	1. CONSTRUCT/RECLAD CANOPY 2. REMOVE AND REPLACE CRASH CUSHION (6) (7)
STAGE 5 1. OPEN LANE 5 AND 6 TO TRAFFIC. 2. CLOSE LANE 7 TO 10 TO TRAFFIC.	1. CONSTRUCT/RECLAD CANOPY 2. REMOVE AND REPLACE CRASH CUSHION (8) (9)
STAGE 6 1. OPEN LANE 7 AND 8 TO TRAFFIC. 2. CLOSE LANE 9 TO 12 TO TRAFFIC.	1. CONSTRUCT/RECLAD CANOPY 2. REMOVE AND REPLACE CRASH CUSHION (10) (11)
STAGE 7 1. OPEN LANE 9 AND 10 TO TRAFFIC. 2. CLOSE LANE 11 TO 14 TO TRAFFIC.	1. CONSTRUCT/RECLAD CANOPY 2. REMOVE AND REPLACE CRASH CUSHION (12) (13)
STAGE 8 1. OPEN LANE 11 AND 12 TO TRAFFIC. 2. CLOSE LANE 13 TO 16 TO TRAFFIC.	1. CONSTRUCT/RECLAD CANOPY 2. REMOVE AND REPLACE CRASH CUSHION (14) (15)
STAGE 9 1. OPEN LANE 13 AND 14 TO TRAFFIC. 2. CLOSE LANE 15 TO 17 TO TRAFFIC.	1. CONSTRUCT/RECLAD CANOPY 2. REMOVE AND REPLACE CRASH CUSHION (16)
STAGE 10 1. OPEN LANE 15 AND 16 TO TRAFFIC. 2. CLOSE LANE 17 AND 18 TO TRAFFIC.	1. CONSTRUCT/RECLAD CANOPY 2. REMOVE AND REPLACE CRASH CUSHION (17)

ALL DIMENSIONS ARE IN FEET UNLESS OTHERWISE SHOWN

STAGE CONSTRUCTION

SCALE: 1" = 40'

SC-2

STATE OF CALIFORNIA - DEPARTMENT OF TRANSPORTATION

Caltrans

FUNCTIONAL SUPERVISOR

CALCULATED-DESIGNED BY CHALIT SUNTHUDKARN

CHECKED BY JAMES ZANDIAN

REVISED BY

DATE REVISED

LAST REVISION 00-00-00

DATE PLOTTED => 26-JUN-2012

TIME PLOTTED => 14:27

Dist	COUNTY	ROUTE	POST MILES TOTAL PROJECT	SHEET No.	TOTAL SHEETS
04	Ala	80	2.0/2.3	15	83

REGISTERED CIVIL ENGINEER 06/26/2012 DATE

PLANS APPROVAL DATE

REGISTERED PROFESSIONAL ENGINEER JAMES ZANDIAN No. C 51957 Exp. 6-30-12 CIVIL STATE OF CALIFORNIA

THE STATE OF CALIFORNIA OR ITS OFFICERS OR AGENTS SHALL NOT BE RESPONSIBLE FOR THE ACCURACY OR COMPLETENESS OF SCANNED COPIES OF THIS PLAN SHEET.

Parsons Brinckerhoff
303 Second Street
Suite 700 North
San Francisco, CA 94107-1317

BAY AREA TOLL AUTHORITY
101 EIGHT STREET
OAKLAND, CA 94607

LEGEND:

- (XX) ROADSIDE SIGN NUMBER
- ▲ EXISTING ROADSIDE SIGN TO REMAIN
- ● RESET ROADSIDE SIGN

SPEED LIMIT 25 — R2-1

W11-2

NOTES:

1. FOR ACCURATE RIGHT OF WAY DATA, CONTACT RIGHT OF WAY ENGINEERING AT THE DISTRICT OFFICE.
2. FEDERAL SIGN CODES ARE SHOWN UNLESS DESIGNATED BY (CA) WHICH INDICATES A CALIFORNIA SIGN CODE.
3. ALL SIGNAGE SHALL CONFORM WITH THE LATEST VERSION OF MUTCD.

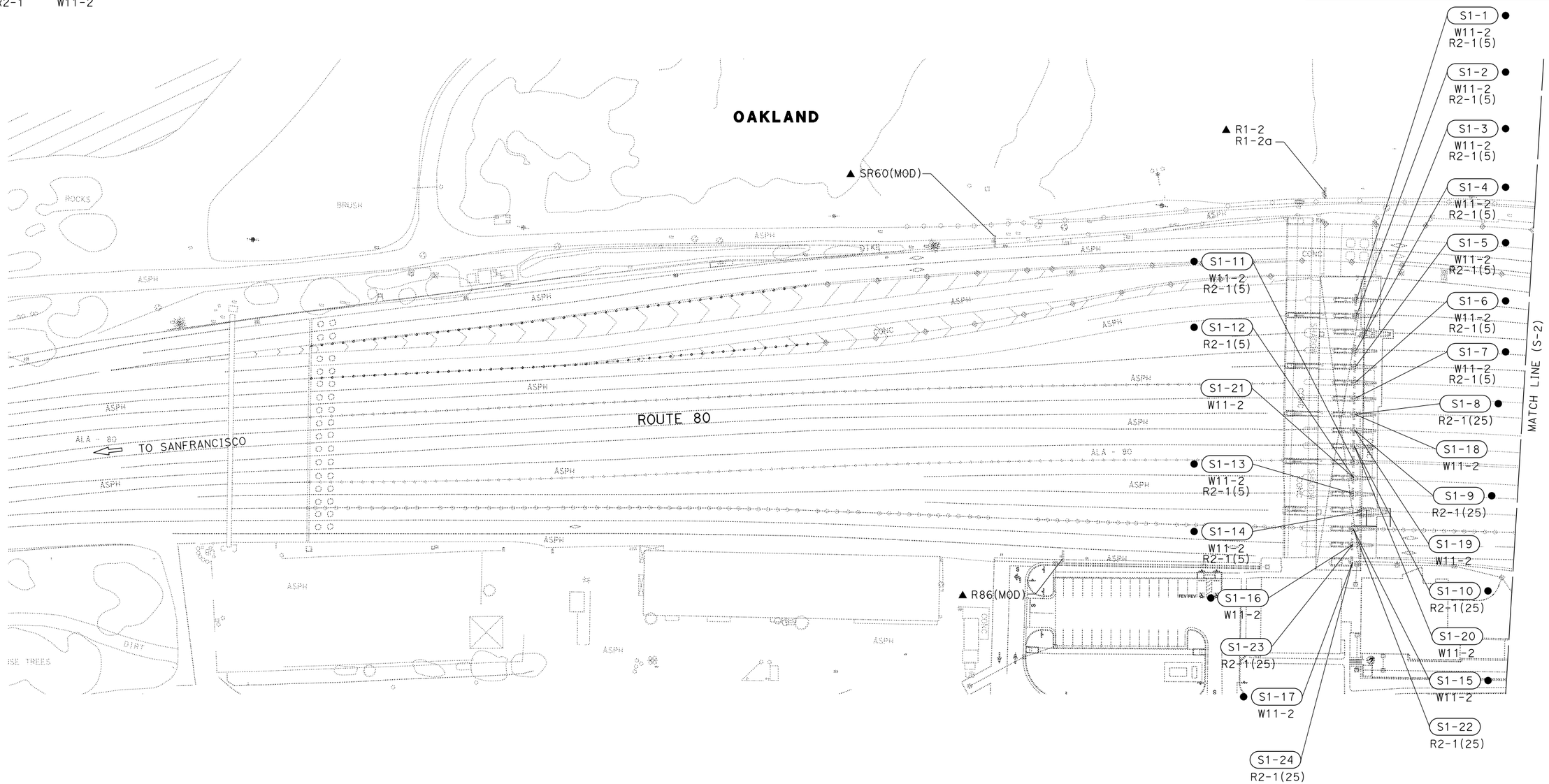

ALL DIMENSIONS ARE IN FEET UNLESS OTHERWISE SHOWN

SIGN PLAN

SCALE: 1" = 50'

50' 0' 50' 100'

GRAPHIC SCALE

S-1

STATE OF CALIFORNIA - DEPARTMENT OF TRANSPORTATION

Caltrans

FUNCTIONAL SUPERVISOR

CALCULATED-DESIGNED BY CHALIT SUNTHUDKARN

CHECKED BY JAMES ZANDIAN

REVISED BY

DATE REVISED

LAST REVISION 00-00-00

DATE PLOTTED => 26-JUN-2012
TIME PLOTTED => 14:27

Dist	COUNTY	ROUTE	POST MILES TOTAL PROJECT	SHEET No.	TOTAL SHEETS
04	Ala	80	2.0/2.3	16	83

REGISTERED CIVIL ENGINEER 06/26/2012 DATE

PLANS APPROVAL DATE

REGISTERED PROFESSIONAL ENGINEER
JAMES ZANDIAN
No. C 51957
Exp. 6-30-12
CIVIL
STATE OF CALIFORNIA

THE STATE OF CALIFORNIA OR ITS OFFICERS OR AGENTS SHALL NOT BE RESPONSIBLE FOR THE ACCURACY OR COMPLETENESS OF SCANNED COPIES OF THIS PLAN SHEET.

Parsons Brinckerhoff
303 Second Street
Suite 700 North
San Francisco, CA 94107-1317

BAY AREA TOLL AUTHORITY
101 EIGHT STREET
OAKLAND, CA 94607

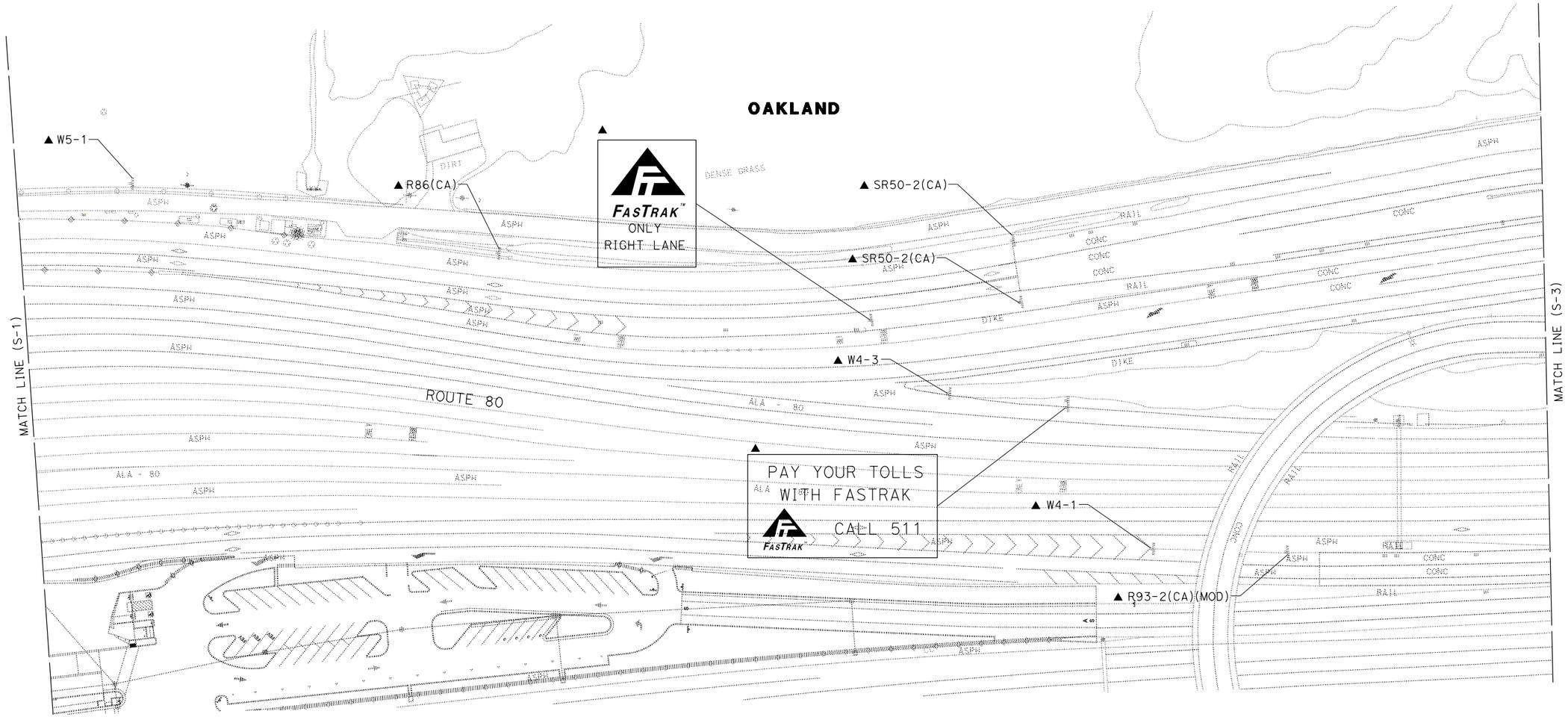

ALL DIMENSIONS ARE IN FEET UNLESS OTHERWISE SHOWN

SIGN PLAN

SCALE: 1" = 50'

50' 0' 50' 100'

GRAPHIC SCALE

S-2

STATE OF CALIFORNIA - DEPARTMENT OF TRANSPORTATION

Caltrans

FUNCTIONAL SUPERVISOR

CALCULATED-DESIGNED BY CHALIT SUNTHUDKARN

CHECKED BY JAMES ZANDIAN

REVISED BY

DATE REVISED

LAST REVISION 00-00-00

DATE PLOTTED => 26-JUN-2012
TIME PLOTTED => 14:27

Dist	COUNTY	ROUTE	POST MILES TOTAL PROJECT	SHEET No.	TOTAL SHEETS
04	Ala	80	2.0/2.3	17	83

REGISTERED CIVIL ENGINEER 06/26/2012 DATE

PLANS APPROVAL DATE

REGISTERED PROFESSIONAL ENGINEER JAMES ZANDIAN No. C 51957 Exp. 6-30-12 CIVIL STATE OF CALIFORNIA

THE STATE OF CALIFORNIA OR ITS OFFICERS OR AGENTS SHALL NOT BE RESPONSIBLE FOR THE ACCURACY OR COMPLETENESS OF SCANNED COPIES OF THIS PLAN SHEET.

Parsons Brinckerhoff
303 Second Street
Suite 700 North
San Francisco, CA 94107-1317

BAY AREA TOLL AUTHORITY
101 EIGHT STREET
OAKLAND, CA 94607

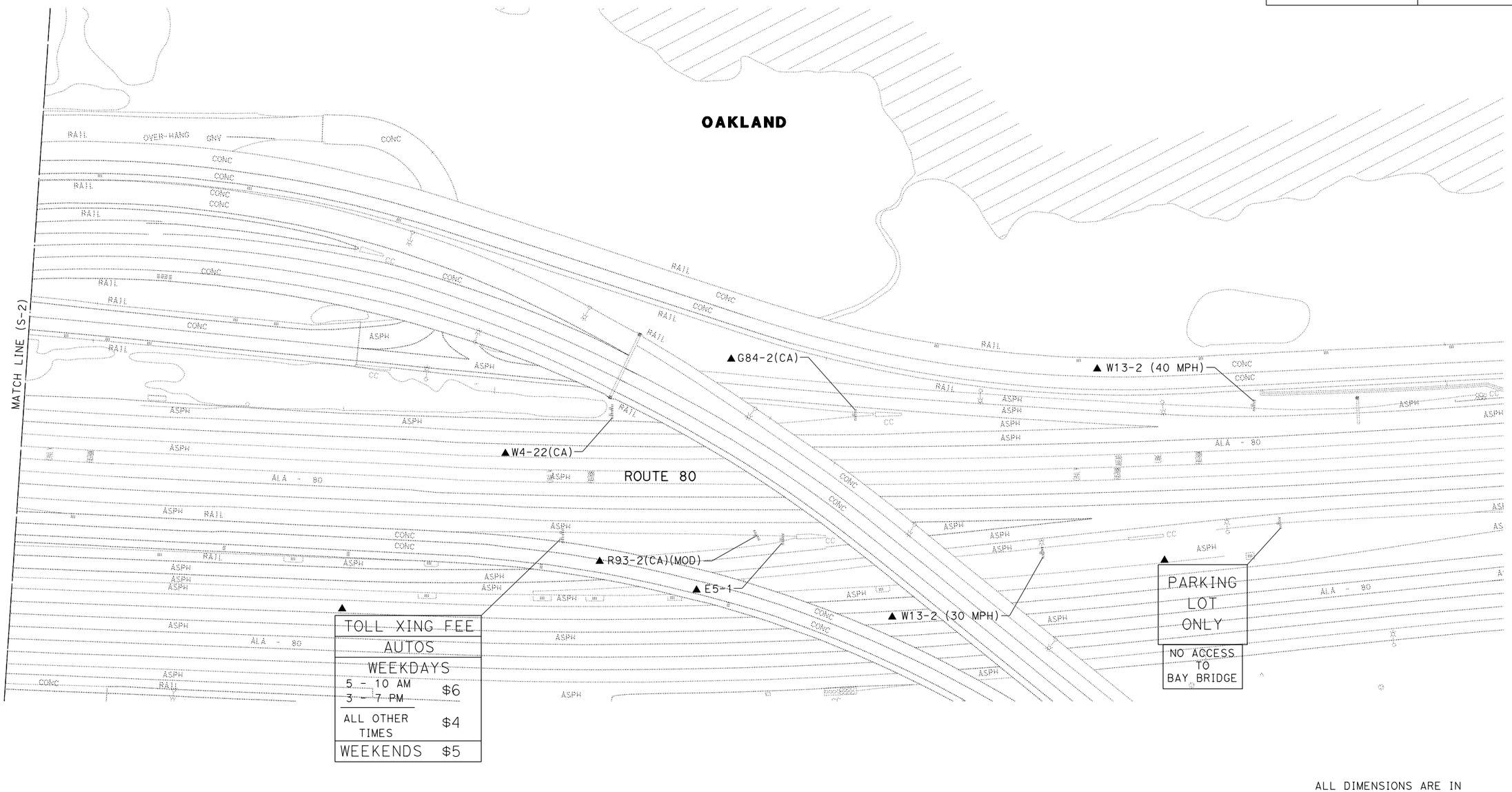

ALL DIMENSIONS ARE IN FEET UNLESS OTHERWISE SHOWN

SIGN PLAN

SCALE: 1" = 50'

50' 0' 50' 100'

GRAPHIC SCALE

S-3

STATE OF CALIFORNIA - DEPARTMENT OF TRANSPORTATION

Caltrans

FUNCTIONAL SUPERVISOR

CALCULATED-DESIGNED BY CHALIT SUNTHUDKARN

CHECKED BY JAMES ZANDIAN

REVISED BY

DATE REVISED

LAST REVISION 00-00-00

DATE PLOTTED => 26-JUN-2012
TIME PLOTTED => 14:27

Dist	COUNTY	ROUTE	POST MILES TOTAL PROJECT	SHEET No.	TOTAL SHEETS
04	Ala	80	2.0/2.3	18	83

REGISTERED CIVIL ENGINEER 06/26/2012 DATE

PLANS APPROVAL DATE

REGISTERED PROFESSIONAL ENGINEER JAMES ZANDIAN No. C 51957 Exp. 6-30-12 CIVIL STATE OF CALIFORNIA

THE STATE OF CALIFORNIA OR ITS OFFICERS OR AGENTS SHALL NOT BE RESPONSIBLE FOR THE ACCURACY OR COMPLETENESS OF SCANNED COPIES OF THIS PLAN SHEET.

Parsons Brinckerhoff
303 Second Street
Suite 700 North
San Francisco, CA 94107-1317

BAY AREA TOLL AUTHORITY
101 EIGHT STREET
OAKLAND, CA 94607

ROADSIDE SIGN QUANTITIES

SHEET No.	SIGN No.	CODE	PANEL SIZE Horiz. (in)	PANEL SIZE Vert. (in)	RESET ROADSIDE SIGN (EA)	INSTALL ROADSIDE SIGN PANEL ON EXISTING POST (EA)	REMARKS
S-1	1-1	W11-2 R2-1 (5)	24 24	24 30	1		
S-1	1-2	W11-2 R2-1 (5)	24 24	24 30	1		
S-1	1-3	W11-2 R2-1 (5)	24 24	24 30	1		
S-1	1-4	W11-2 R2-1 (5)	24 24	24 30	1		
S-1	1-5	W11-2 R2-1 (5)	24 24	24 30	1		
S-1	1-6	W11-2 R2-1 (5)	24 24	24 30	1		
S-1	1-7	W11-2 R2-1 (5)	24 24	24 30	1		
S-1	1-8	R2-1 (25)	24	30	1		
S-1	1-9	R2-1 (25)	24	30	1		
S-1	1-10	R2-1 (25)	24	30	1		
S-1	1-11	W11-2 R2-1 (5)	24 24	24 30	1		
S-1	1-12	R2-1 (5)	24	30	1		
S-1	1-13	W11-2 R2-1 (5)	24 24	24 30	1		
S-1	1-14	W11-2 R2-1 (5)	24 24	24 30	1		
S-1	1-15	W11-2	24	24	1		
S-1	1-16	W11-2	24	24	1		
S-1	1-17	W11-2 R2-1 (25)	24 24	24 30	1		
S-1	1-18	W11-2	24	24		1	MOUNT ON SAME POST AS SIGN S1-8
S-1	1-19	W11-2	24	24		1	MOUNT ON SAME POST AS SIGN S1-9
S-1	1-20	W11-2	24	24		1	MOUNT ON SAME POST AS SIGN S1-10
S-1	1-21	W11-2	24	24		1	MOUNT ON SAME POST AS SIGN S1-12
S-1	1-22	R2-1 (25)	24	30		1	MOUNT ON SAME POST AS SIGN S1-15
S-1	1-23	R2-1 (25)	24	30		1	MOUNT ON SAME POST AS SIGN S1-16
S-1	1-24	R2-1 (25)	24	30		1	MOUNT ON SAME POST AS SIGN S1-17
SHEET SQ-1 TOTAL					17	7	
PROJECT TOTAL					17	7	

SIGN MATERIAL SUMMARY

SHEET No.	SIGN No.	CODE	PANEL SIZE Horiz. (in)	PANEL SIZE Vert. (in)	PANEL AREA (sq. ft)	SINGLE FACED	BACKGROUND SHEETING COLOR	BACKGROUND RETROFLECTIVE ASTM TYPE	LEGEND SHEETING COLOR	DESCRIPTION (REMARKS)
S-1	1-18	W11-2	24	24	4	X	YELLOW	III	BLACK	
	1-19	W11-2	24	24	4	X	YELLOW	III	BLACK	
	1-20	W11-2	24	24	4	X	YELLOW	III	BLACK	
	1-21	W11-2	24	24	4	X	YELLOW	III	BLACK	
	1-22	R2-1 (25)	24	30	5	X	WHITE	III	BLACK	
	1-23	R2-1 (25)	24	30	5	X	WHITE	III	BLACK	
	1-24	R2-1 (25)	24	30	5	X	WHITE	III	BLACK	

SIGN QUANTITIES

SQ-1

STATE OF CALIFORNIA - DEPARTMENT OF TRANSPORTATION

Caltrans

FUNCTIONAL SUPERVISOR

CALCULATED-DESIGNED BY CHALIT SUNTHUDKARN

CHECKED BY JAMES ZANDIAN

REVISED BY

DATE REVISED

LAST REVISION 00-00-00

DATE PLOTTED => 26-JUN-2012
TIME PLOTTED => 14:27

Dist	COUNTY	ROUTE	POST MILES TOTAL PROJECT	SHEET No.	TOTAL SHEETS
04	Ala	80	2.0/2.3	19	83

REGISTERED CIVIL ENGINEER 06/26/2012 DATE

PLANS APPROVAL DATE

REGISTERED PROFESSIONAL ENGINEER JAMES ZANDIAN No. C 51957 Exp. 6-30-12 CIVIL STATE OF CALIFORNIA

THE STATE OF CALIFORNIA OR ITS OFFICERS OR AGENTS SHALL NOT BE RESPONSIBLE FOR THE ACCURACY OR COMPLETENESS OF SCANNED COPIES OF THIS PLAN SHEET.

Parsons Brinckerhoff
303 Second Street
Suite 700 North
San Francisco, CA 94107-1317

BAY AREA TOLL AUTHORITY
101 EIGHT STREET
OAKLAND, CA 94607

CRASH CUSHION QUANTITIES

LOCATION	CRASH CUSHION (QUADGUARD) (6 BAY)	OBJECT MARKER (TYPE R)
	LF	LF
TOLL PLAZA	17	17
WB 80 HOV (NORTH SIDE)	1	1
WEST GRAND AVE. OFF RAMP	1	1
ADMINISTRATION BUILDING ACCESS RAMP	1	1
TOTAL	20	20

FENCE QUANTITIES

LOCATION	TEMPORARY FENCE
	LF
TOLL PLAZA CONSTRUCTION LAYDOWN AREA	1,044.00
TOTAL	1,044.00

SUMMARY OF QUANTITIES

Q-1

STATE OF CALIFORNIA - DEPARTMENT OF TRANSPORTATION

Caltrans

FUNCTIONAL SUPERVISOR

CALCULATED-DESIGNED BY CHALIT SUNTHUDKARN

CHECKED BY JAMES ZANDIAN

REVISED BY

DATE REVISED

LAST REVISION 00-00-00

DATE PLOTTED => 26-JUN-2012
TIME PLOTTED => 14:27

DIST.	COUNTY	ROUTE	POST MILES TOTAL PROJECT	SHEET NO.	TOTAL SHEETS
04	Ala	80	2.0/2.3	20	83

REGISTERED ARCHITECT — DATE 06/26/2012

PLANS APPROVAL DATE

STATE OF CALIFORNIA — SCOTT L. DANIELSON — 6/30/2013 — CERTIFICATE NO. C 61AB — REGISTERED ARCHITECT

The State of California or its officers or agents shall not be responsible for the accuracy or completeness of electronic copies of this plan sheet.

Parsons Brinckerhoff Inc.
303 Second Street, Suite 700N
San Francisco, CA 94107

Bay Area Toll Authority
101 Eight Street
Oakland, CA 94607

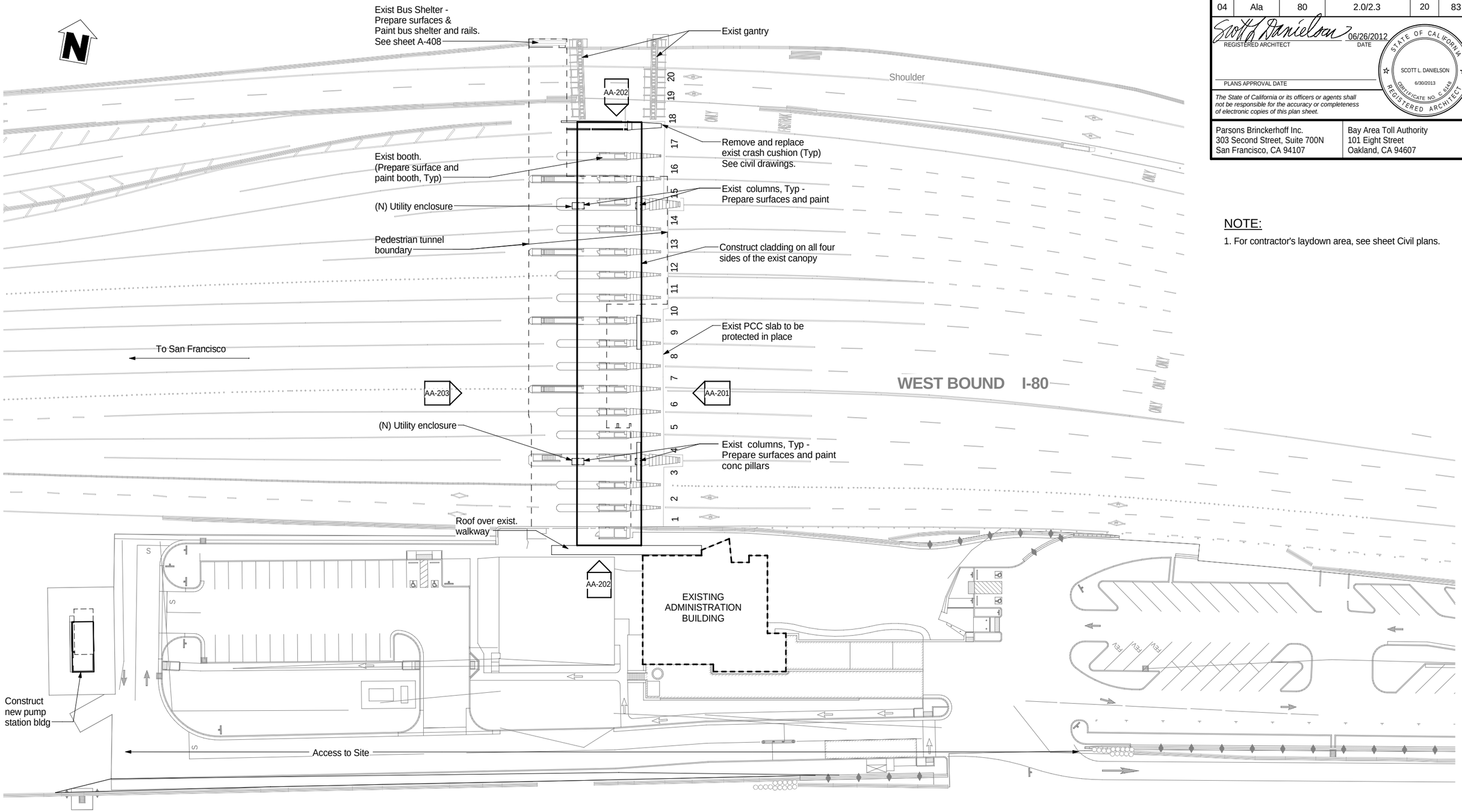

SITE PLAN

SCALE: 1" = 30'-0"

NOTE:

1. For contractor's laydown area, see sheet Civil plans.

AA-001

DESIGN	BY R. Howell	CHECKED S. Danielson	LOAD & RESISTANCE FACTOR DESIGN	LIVE LOADING: PERMIT DESIGN VEHICLE
DETAILS	BY Z. Sadat	CHECKED R. Howell	LAYOUT BY	CHECKED
QUANTITIES	BY	CHECKED	SPECIFICATIONS BY	PLANS AND SPECS COMPARED

PREPARED FOR THE STATE OF CALIFORNIA DEPARTMENT OF TRANSPORTATION

PROJECT ENGINEER

BRIDGE NO.

POST MILE

SFOBB TOLL PLAZA CANOPY RENOVATIONS

LOCATION MAP

DESIGN GENERAL PLAN SHEET (ENGLISH) (REV. 06-01-09)

ORIGINAL SCALE IN INCHES FOR REDUCED PLANS 0 1 2 3

CU BATA011
EA 4G2801/4G2901

DISREGARD PRINTS BEARING EARLIER REVISION DATES

REVISION DATES (PRELIMINARY STAGE ONLY)

SHEET 1 OF 64

C:\Documents and Settings\reyesl\My Documents\SFOBB-Canopy-Arch_reyesl.rvt

6/26/2012 2:16:14 PM

DIST.	COUNTY	ROUTE	POST MILES TOTAL PROJECT	SHEET NO.	TOTAL SHEETS
04	Ala	80	2.0/2.3	21	83

REGISTERED ARCHITECT — DATE 06/26/2012

PLANS APPROVAL DATE

STATE OF CALIFORNIA — SCOTT L. DANIELSON — 6/30/2013 — CERTIFICATE NO. C 61248 — REGISTERED ARCHITECT

The State of California or its officers or agents shall not be responsible for the accuracy or completeness of electronic copies of this plan sheet.

Parsons Brinckerhoff Inc.
303 Second Street, Suite 700N
San Francisco, CA 94107

Bay Area Toll Authority
101 Eight Street
Oakland, CA 94607

ABBREVIATIONS

@	AT
&	AND
L	ANGLE
C	CENTERLINE
Ø	DIAMETER OR ROUND
□	SQUARE
°	DEGREE
AC	ASPHALT CONRETE
AB	ANCHOR BOLT
ADA	AMERICAN DISABILITIES ACT
ABV	ABOVE
ALT	ALTERNATE
ALUM	ALUMINUM
APA	AMERICAN PLYWOOD ASSOCIATION
ARCH	ARCHITECTURAL, ARCHITECT
ASPH	ASPHALT
BD	BOARD
BLDG	BUILDING
BLK	BLOCK
BM	BEAM
BOT	BOTTOM
B/W	BETWEEN
CJ	CONTROL JOINT
CIP	CAST-IN-PLACE
CLG	CEILING
CMS	CHANGEABLE MESSAGE SIGN
CTR	CENTER
CTSK	COUNTERSUNK
DEPT	DEPARTMENT
DET	DETAIL
DIA	DIAMETER
DIM	DIMENSION
DN	DOWN
DR	DOOR
DS	DOWNSPOUT
DWG	DRAWING
(E)	EXISTING
E	EAST
EA	EACH
EDPM	ETHYLENE PROPYLENE DIENE MONOMER
EL	ELEVATION
ELEC	ELECTRICAL
EMS	ELECTRONIC MESSAGE SIGN
EP	EDGE OF PAVEMENT
EQ	EQUAL
EQUIP	EQUIPMENT
EXPO	EXPOSED
EXT	EXTERIOR
FDN	FOUNDATION
FF	FINISH FLOOR
FG	FINISH GRADE
FHMS	FLATHEAD METAL SCREW
FIN	FINISH
FOC	FACE OF CONCRETE
FRMG	FRAMING
FT	FEET, FOOT
FTG	FOOTING
GA	GAUGE
GALV	GALVANIZED
GL	GLASS
GR	GRADE
HDWR	HARDWARE
HM	HOLLOW METAL
HORIZ	HORIZONTAL
HP	HIGH POINT
HT	HEIGHT
HWY	HIGHWAY
IN	INCH
INFO	INFORMATION
INT	INTERIOR
JST	JOIST
JT	JOINT
LBS	POUNDS
LF	LINEAR FEET
LOL	LAYOUT LINE
M	METER
MAT	MATERIAL
MAX	MAXIMUM
MFR	MANUFACTURER
MIN	MINIMUM
MISC	MISCELLANEOUS
mm	MILLIMETER
N	NORTH, NEW
NIC	NOT IN CONTRACT
NO	NUMBER
NTS	NOT TO SCALE
OC	ON CENTER
OD	OUTSIDE DIAMETER
OPNG	OPENING
OPP.H	OPPOSITE HAND
PLWD	PLYWOOD
(R)	RELOCATED
R	RADIUS
RD	ROOF DRAIN
REF	REFERENCE
REINF	REINFORCED (ING)
REQ	REQUIRED
RM	ROOM
S	SOUTH
SCHED	SCHEDULE
SF	SQUARE FEET
SFOBB	SAN FRANCISCO/OAKLAND BAY BRIDGE
SIM	SIMILAR
SPEC	SPECIFICATION
SQ	SQUARE
SS	STAINLESS STEEL
STA	STATION
STD	STANDARD
STL	STEEL
STRUC	STRUCTURAL
TB	TOLL BOOTH
THK	THICK
TOC	TOP OF CURB OR CONCRETE
TOP	TOP OF PARAPET
TOR	TOP OF ROOF
TOW	TOP OF WALL
TS	TUBE STEEL
TYP	TYPICAL
UON	UNLESS OTHERWISE NOTED
VAR	VARIES
VERT	VERTICAL
W	WEST
W/	WITH
W/O	WITHOUT
WD	WOOD
WP	WORKING POINT
WT	WEIGHT

SYMBOLS

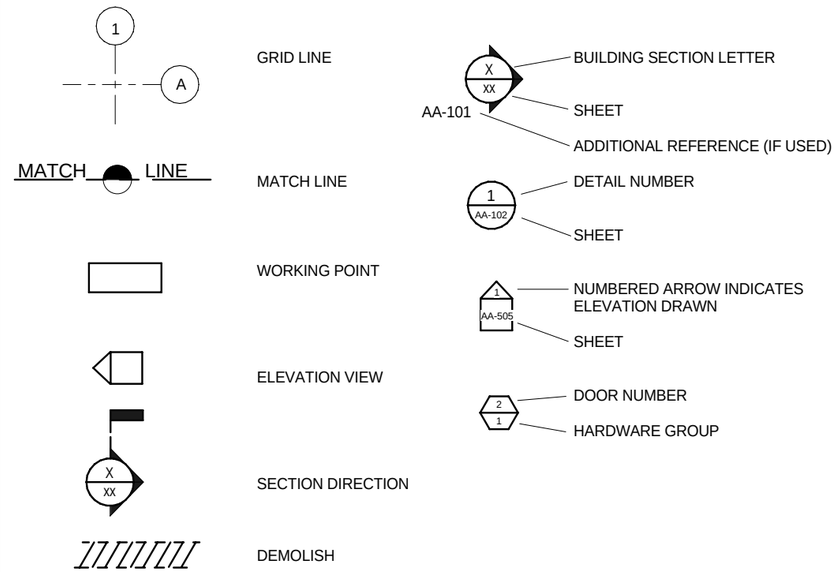

SCOPE OF WORK

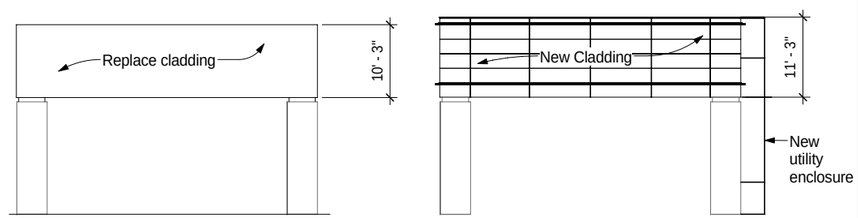

Existing Typ. End Elevation

Length of Canopy	278'-0"
Width of Canopy	42'-3"
Height of Cladding	10'-3"
Area of Cladding	6565 sf
Area of Columns	1156 sf
Total Area:	7721 sf

New End Elevation

Length of Canopy	278'-1"
Width of Canopy	42'-4"
Height of Cladding	11'-3"
Area of Cladding	7208 sf
Area of Col/Util. Encl.	1244.5 sf
Total Area:	8453.5 sf

GENERAL NOTES:

1. Wood blocking: Miscellaneous wood blocking shall be securely connected with a minimum of 16d nails 12" on center.
2. Plywood Connections: At vertical joints of plywood, install metal studs flat. At horizontal joints, connect to flat metal stud bridging. Connect plywood to metal studs with 10 ga stainless steel self-tapping screws 16" o.c. at edges and interior of sheet.
3. Drip Pans: Retain existing drip pans at the three existing CMS clocks, 17 EMS signs and 17 Traffic Light assemblies. Cut and patch as required to fit. Drip pans shall be watertight, set level, and capable of retaining water.
4. Composite Panel Connections: Connect composite panels to MDO plywood with #10 s.s. self-tapping screws 16" o.c..
5. New work is noted as (N) or unlabeled. Existing items are noted as (E).

AA-002

	BY		CHECKED	
DESIGN	R. Howell		S. Danielson	
DETAILS	Z. Sadat		R. Howell	
QUANTITIES				

LOAD & RESISTANCE FACTOR DESIGN — LIVE LOADING: PERMIT DESIGN VEHICLE

LAYOUT — BY — CHECKED

SPECIFICATIONS — BY — PLANS AND SPECS COMPARED

PREPARED FOR THE STATE OF CALIFORNIA DEPARTMENT OF TRANSPORTATION

PROJECT ENGINEER

BRIDGE NO.

POST MILE

SFOBB TOLL PLAZA CANOPY RENOVATIONS

ABBREVIATIONS, SYMBOLS & GENERAL NOTES

DESIGN GENERAL PLAN SHEET (ENGLISH) (REV. 06-01-09)

ORIGINAL SCALE IN INCHES FOR REDUCED PLANS 0 1 2 3

CU BATA011
EA 4G2801/4G2901

DISREGARD PRINTS BEARING EARLIER REVISION DATES

REVISION DATES (PRELIMINARY STAGE ONLY)

SHEET 2 OF 64

6/26/2012 2:16:16 PM

C:\Documents and Settings\reyesl\My Documents\SFOBB-Canopy-Arch_reyesl.rvt

DIST.	COUNTY	ROUTE	POST MILES TOTAL PROJECT	SHEET NO.	TOTAL SHEETS
04	Ala	80	2.0/2.3	22	83

REGISTERED ARCHITECT — DATE 06/26/2012

PLANS APPROVAL DATE

STATE OF CALIFORNIA — SCOTT L. DANIELSON — 6/30/2013 — CERTIFICATE NO. C 61248 — REGISTERED ARCHITECT

The State of California or its officers or agents shall not be responsible for the accuracy or completeness of electronic copies of this plan sheet.

Parsons Brinckerhoff Inc.
303 Second Street, Suite 700N
San Francisco, CA 94107

Bay Area Toll Authority
101 Eight Street
Oakland, CA 94607

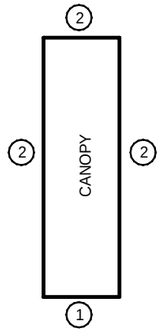

STAGE CONSTRUCTION

1 STAGE 1

2 STAGE 2

CANOPY INSTALLATION SEQUENCING AND STAGING

Installation Sequence	Work access	Panel installation method	Lane Closures	Stage Construction	Maintained System Operations
1. Fabricate and install falsework or scaffold system.	FW, scaff [1]	Conv.	See Lane Closure charts	1,2 [4]	TL [5] , EMS [6]
2. Install temporary lane indicator lights with traffic screening	FW, scaff [1]	Conv.	See Lane Closure charts	1,2 [4]	TL [5] , EMS [6]
3. Demolish existing Canopy paneling to steel canopy structure.	FW, scaff [1]	Conv., Prefab [2]	See Lane Closure charts	1,2 [4]	TL [5] , EMS [6]
4. Remove demolished materials to trash refuse or recycle container area. No demolished materials shall be stored on the roof or in canopy structure	FW, scaff [1]	Conv., Prefab. [3]	See Lane Closure charts	1,2 [4]	TL [5] , EMS [6]
5. Attach canopy structural angles and other misc metals	FW, scaff [1]	Conv., Prefab. [3]	See Lane Closure charts	1,2 [4]	TL [5] , EMS [6]
6. Welding or cutting of steel members which creates sparks must be contained and prevented from falling onto the traffic lanes or toll both area.	FW, scaff [1]	Conv., Prefab. [3]	See Lane Closure charts	1,2 [4]	TL [5] , EMS [6]
7. Attach plywood	FW, scaff [1]	Conv., Prefab. [3]	See Lane Closure charts	1,2 [4]	TL [5] , EMS [6]
8. Attach waterproof membrane	FW, scaff [1]	Conv., Prefab. [3]	See Lane Closure charts	1,2 [4]	TL [5] , EMS [6]
9. Attach composite panel.	FW, scaff [1]	Conv., Prefab. [3]	See Lane Closure charts	1,2 [4]	TL [5] , EMS [6]
10. Attach end pieces, trim or other finish edges.	FW, scaff [1]	Conv., Prefab. [3]	See Lane Closure charts	1,2 [4]	TL [5] , EMS [6]
11. Apply joint sealant	FW, scaff [1]	Conv., Prefab. [3]	See Lane Closure charts	1,2 [4]	TL [5] , EMS [6]

NOTES

FW is falsework

Scaff is scaffolding systems which may either be supported from the existing canopy or mechanically operated

Prefab is prefabricated canopy panel

1. Canopy work is limited to scaffold systems that do not continuously span the canopy reconstruction area. Contractor shall note that canopy demolition and canopy reconstruction may not progress to successive canopy lane locations as noted on these plans, until the canopy work is complete and the permanent lane lights, CMS clocks and EMS are restored and operational.

2. Existing canopy demolition for the canopy prefabricated panels must include the Existing Cladding Connection members to the Existing Canopy. If installing the new prefabricated panels, the contractor shall maintain waterproofing on the demolition sections of the existing canopy sections at all times. Contractor shall note that canopy demolition and prefabricated canopy panel installation may progress concurrently, but may not progress concurrently more than 1 prefabricated panel on either the North, East or West Canopy elevations. For prefabricated canopy panels the contractor must remove the hinged lane light assembly and maintain waterproofing in the lane light area prior to installing the prefabricated canopy panel.

3. The contractor installing the prefabricated panels must complete the panel installation including the installation of sealants, modifying permanent Traffic lights, CMS clocks and EMS to a fully restored and operational condition before moving and installing the successive prefabricated panel.

4. The contractor may not progress to stage 2 until stage 1 is complete

5. TL refers to traffic lights. The contractor may install temporary Traffic lights onto temporary scaffolding or on traffic screened areas that are of equal existing Traffic light specification. Temporary Traffic lights shall be offset onto the traffic screened area and perpendicular to the existing traffic lights. Existing traffic light are functional from both the toll booth and the toll administration building. Temporary Traffic light operation shall be functional from both the lane toll booth and the administrative building and shall remain operational at all time. For prefabricated panel installation the permanent Traffic lights are to remain operational at all times and may be replaced by temporary Traffic lights as noted herein or as approved by the engineer. At the end of the canopy construction the Traffic Lights shall be restored to a fully operational condition

6. EMS is electronic message signs, EMS signs may be temporarily disconnected if the contractor installs a temporary illuminated sign as approved by the engineer. Upon completion of the canopy reconstruction at the disconnected EMS location and before moving scaffolds or installing successive prefabricated canopy panels, the contractor shall restore the EMS to full operation. At the end of the canopy reconstruction the EMS shall be restored to a fully operational condition.

AA-003

	BY	CHECKED
DESIGN	R. Howell	S. Danielson
DETAILS	Z. Sadat	R. Howell
QUANTITIES		

PREPARED FOR THE STATE OF CALIFORNIA DEPARTMENT OF TRANSPORTATION

PROJECT ENGINEER

BRIDGE NO.

POST MILE

SFOBB TOLL PLAZA CANOPY RENOVATIONS
STAGE CONSTRUCTION PLAN

DESIGN GENERAL PLAN SHEET (ENGLISH) (REV. 06-01-09)

ORIGINAL SCALE IN INCHES FOR REDUCED PLANS 0 1 2 3

CU BATA011
EA 4G2801/4G2901

DISREGARD PRINTS BEARING EARLIER REVISION DATES

REVISION DATES (PRELIMINARY STAGE ONLY)

SHEET 3 OF 64

C:\Documents and Settings\reyesl\My Documents\SFOBB-Canopy-Arch_reyesl.rvt

6/26/2012 2:18:19 PM

DIST.	COUNTY	ROUTE	POST MILES TOTAL PROJECT	SHEET NO.	TOTAL SHEETS
04	Ala	80	2.0/2.3	23	83

REGISTERED ARCHITECT — DATE 06/26/2012

PLANS APPROVAL DATE

STATE OF CALIFORNIA — SCOTT L. DANIELSON — 6/30/2013 — CERTIFICATE NO. C 61248 — REGISTERED ARCHITECT

The State of California or its officers or agents shall not be responsible for the accuracy or completeness of electronic copies of this plan sheet.

Parsons Brinckerhoff Inc.
303 Second Street, Suite 700N
San Francisco, CA 94107

Bay Area Toll Authority
101 Eight Street
Oakland, CA 94607

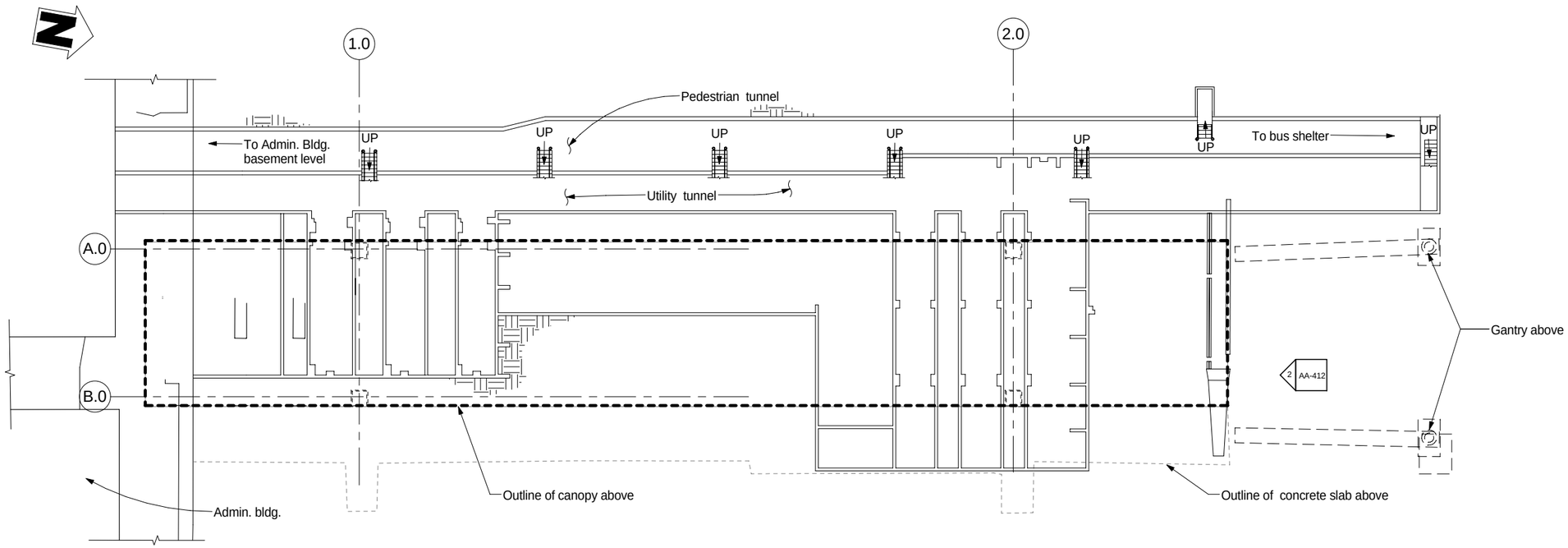

BASEMENT LEVEL PLAN

SCALE: 1/16" = 1'-0"

AA-101

DESIGN	BY R. Howell	CHECKED S. Danielson	LOAD & RESISTANCE FACTOR DESIGN	LIVE LOADING: PERMIT DESIGN VEHICLE	
DETAILS	BY Z. Sadat	CHECKED R. Howell	LAYOUT	BY	CHECKED
QUANTITIES	BY	CHECKED	SPECIFICATIONS	BY	PLANS AND SPECS COMPARED

PREPARED FOR THE STATE OF CALIFORNIA DEPARTMENT OF TRANSPORTATION

PROJECT ENGINEER

BRIDGE NO.

POST MILE

SFOBB TOLL PLAZA CANOPY RENOVATIONS

BASEMENT LEVEL PLAN

DESIGN GENERAL PLAN SHEET (ENGLISH) (REV. 06-01-09)

ORIGINAL SCALE IN INCHES FOR REDUCED PLANS 0 1 2 3

CU BATA011
EA 4G2801/4G2901

DISREGARD PRINTS BEARING EARLIER REVISION DATES

REVISION DATES (PRELIMINARY STAGE ONLY)

SHEET 4 OF 64

C:\Documents and Settings\reyesl\My Documents\SFOBB-Canopy-Arch_reyesl.rvt

6/26/2012 2:16:16 PM

DIST.	COUNTY	ROUTE	POST MILES TOTAL PROJECT	SHEET NO.	TOTAL SHEETS
04	Ala	80	2.0/2.3	24	83

REGISTERED ARCHITECT — DATE 06/26/2012

PLANS APPROVAL DATE

STATE OF CALIFORNIA — SCOTT L. DANIELSON — 6/30/2013 — CERTIFICATE NO. C 6148 — REGISTERED ARCHITECT

The State of California or its officers or agents shall not be responsible for the accuracy or completeness of electronic copies of this plan sheet.

Parsons Brinckerhoff Inc.
303 Second Street, Suite 700N
San Francisco, CA 94107

Bay Area Toll Authority
101 Eight Street
Oakland, CA 94607

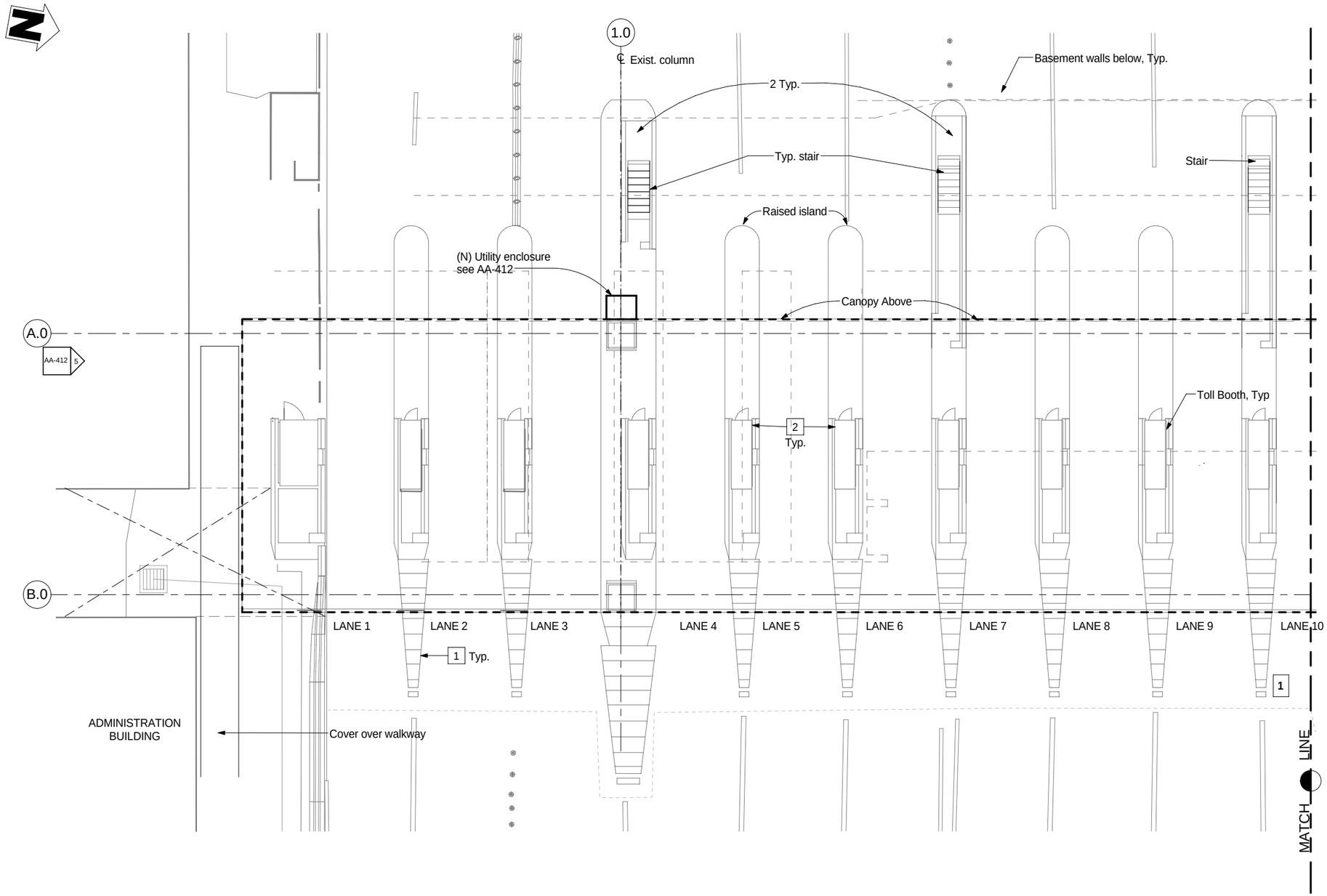

PLAN

SCALE: 1/8" = 1'-0"

NOTES:

1. Remove all existing crash cushions and install new crash cushions. See civil plans.
2. Paint exterior and interior of toll booths, stair walls, stair risers, and stair rails. Paint raised islands and stair treads with non-slip floor paint. See Paint Specifications.

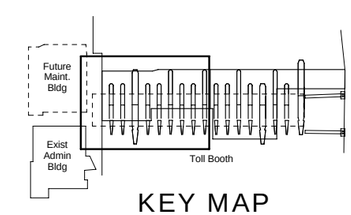

KEY MAP

AA-103

DESIGN	BY R. Howell	CHECKED S. Danielson	LOAD & RESISTANCE FACTOR DESIGN	LIVE LOADING: PERMIT DESIGN VEHICLE
DETAILS	BY Z. Sadat	CHECKED R. Howell	LAYOUT BY	CHECKED
QUANTITIES	BY	CHECKED	SPECIFICATIONS BY	PLANS AND SPECS COMPARED

PREPARED FOR THE STATE OF CALIFORNIA DEPARTMENT OF TRANSPORTATION

PROJECT ENGINEER

BRIDGE NO.

POST MILE

SFOBB TOLL PLAZA CANOPY RENOVATIONS

TOLL BOOTH LEVEL PLAN

DESIGN GENERAL PLAN SHEET (ENGLISH) (REV. 06-01-09)

ORIGINAL SCALE IN INCHES FOR REDUCED PLANS 0 1 2 3

CU BATA011
EA 4G2801/4G2901

DISREGARD PRINTS BEARING EARLIER REVISION DATES

REVISION DATES (PRELIMINARY STAGE ONLY)

SHEET 5 OF 64

C:\Documents and Settings\reyesl\My Documents\SFOBB-Canopy-Arch_reyesl.rvt

6/26/2012 2:16:21 PM

DIST.	COUNTY	ROUTE	POST MILES TOTAL PROJECT	SHEET NO.	TOTAL SHEETS
04	Ala	80	2.0/2.3	25	83

REGISTERED ARCHITECT — DATE 06/26/2012

PLANS APPROVAL DATE

STATE OF CALIFORNIA — SCOTT L. DANIELSON — 6/30/2013 — CERTIFICATE NO. C 6148 — REGISTERED ARCHITECT

The State of California or its officers or agents shall not be responsible for the accuracy or completeness of electronic copies of this plan sheet.

Parsons Brinckerhoff Inc.
303 Second Street, Suite 700N
San Francisco, CA 94107

Bay Area Toll Authority
101 Eight Street
Oakland, CA 94607

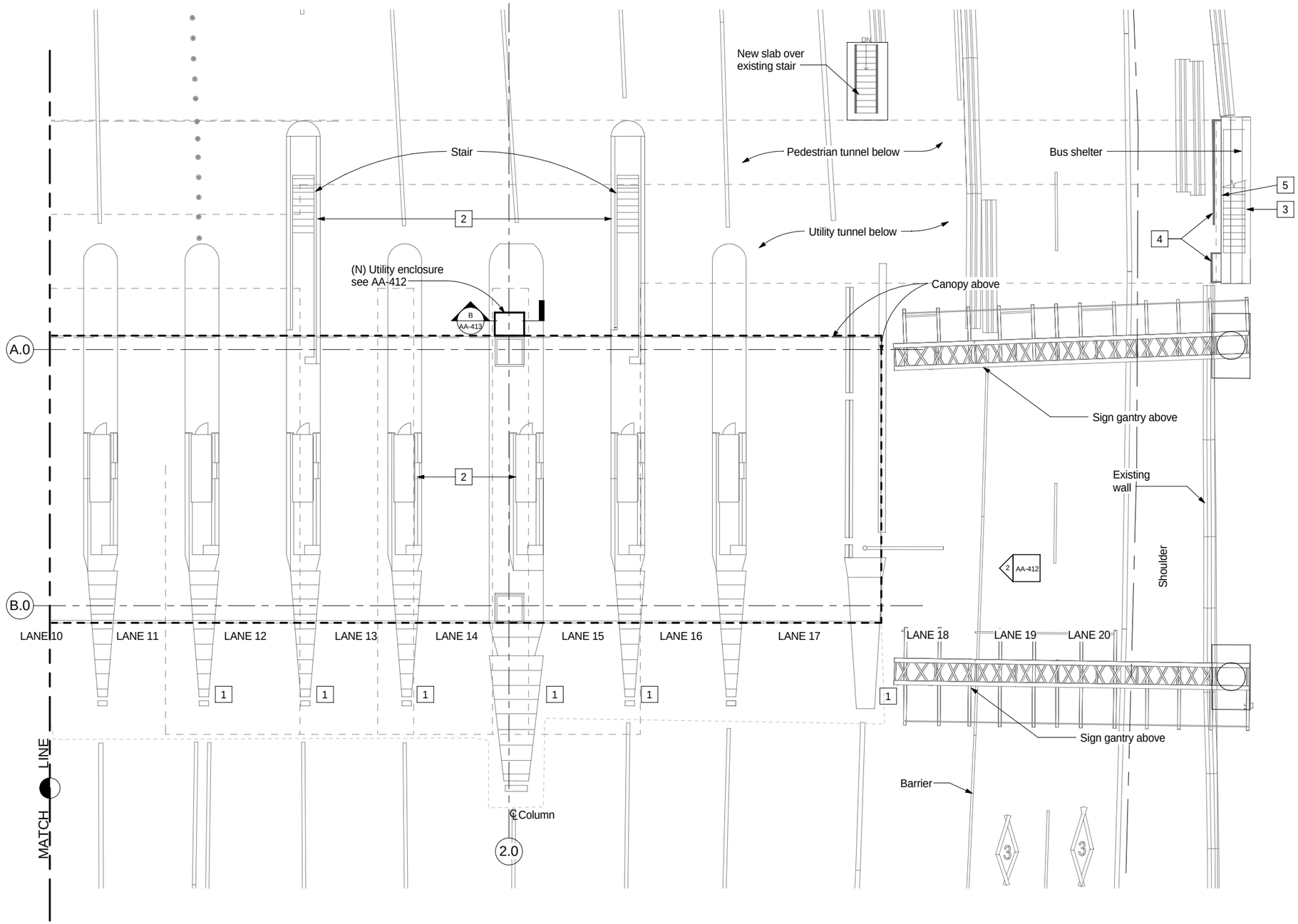

PLAN

SCALE: 1/8" = 1'-0"

NOTES:

1. Remove all existing cushions and install new crash cushions. See civil plans.
2. Paint exterior and interior of toll booths, stair walls, stair risers, and stair rails. Paint raised islands and stair treads with non-slip floor paint. See Paint Specifications.
3. Paint all elements of existing bus shelter above concrete curbs. See paint specs.
4. Paint metal rails at bus shelter
5. Paint stair handrail at bus shelter

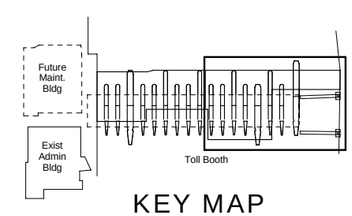

KEY MAP

AA-104

DESIGN	BY R. Howell	CHECKED S. Danielson	LOAD & RESISTANCE FACTOR DESIGN	LIVE LOADING: PERMIT DESIGN VEHICLE
DETAILS	BY Z. Sadat	CHECKED R. Howell	LAYOUT BY	CHECKED
QUANTITIES	BY	CHECKED	SPECIFICATIONS BY	PLANS AND SPECS COMPARED

PREPARED FOR THE STATE OF CALIFORNIA DEPARTMENT OF TRANSPORTATION

PROJECT ENGINEER

BRIDGE NO.

POST MILE

SFOBB TOLL PLAZA CANOPY RENOVATIONS

TOLL BOOTH LEVEL PLAN

DESIGN GENERAL PLAN SHEET (ENGLISH) (REV. 06-01-09)

ORIGINAL SCALE IN INCHES FOR REDUCED PLANS 0 1 2 3

CU BATA011
EA 4G2801/4G2901

DISREGARD PRINTS BEARING EARLIER REVISION DATES

REVISION DATES (PRELIMINARY STAGE ONLY)

SHEET 6 OF 64

C:\Documents and Settings\reyesl\My Documents\SFOBB-Canopy-Arch_reyesl.rvt

6/26/2012 2:16:24 PM

DIST.	COUNTY	ROUTE	POST MILES TOTAL PROJECT	SHEET NO.	TOTAL SHEETS
04	Ala	80	2.0/2.3	26	83

REGISTERED ARCHITECT — DATE 06/26/2012

PLANS APPROVAL DATE

STATE OF CALIFORNIA — SCOTT L. DANIELSON — 6/30/2013 — CERTIFICATE NO. C 6148 — REGISTERED ARCHITECT

The State of California or its officers or agents shall not be responsible for the accuracy or completeness of electronic copies of this plan sheet.

Parsons Brinckerhoff Inc.
303 Second Street, Suite 700N
San Francisco, CA 94107

Bay Area Toll Authority
101 Eight Street
Oakland, CA 94607

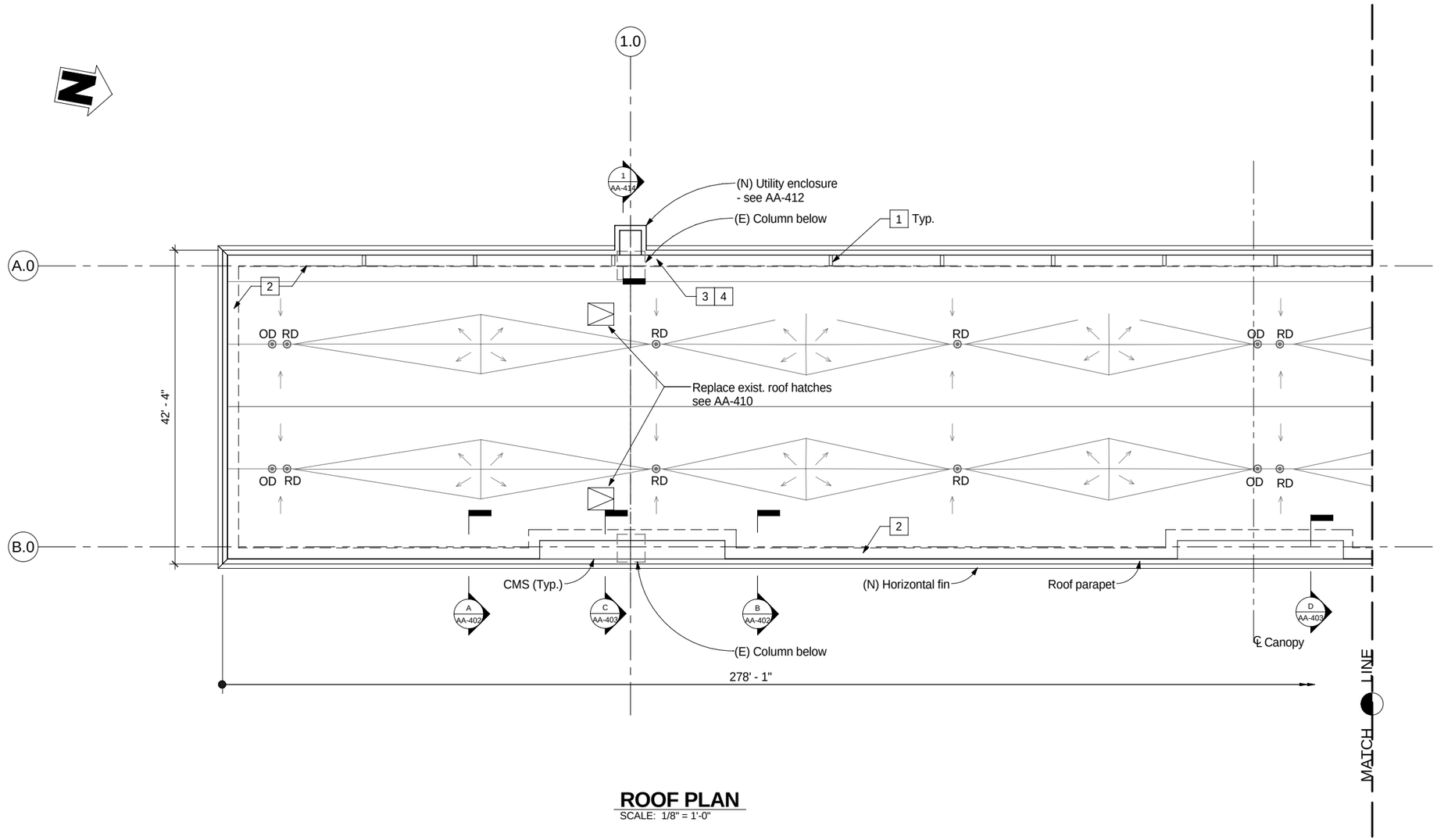

ROOF PLAN

SCALE: 1/8" = 1'-0"

NOTES:

1. Remove all exist CCTV cameras.
2. New roofing and counterflashing at parapet work shall extnd 18" over existing roofing.
3. Mount new electrical box on parapet in a bed of sealant.
4. New conduit penetration through EPDM boot; patch roofing as required.

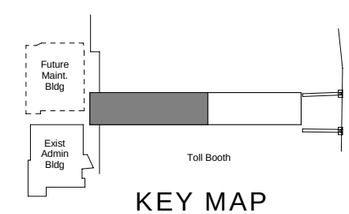

KEY MAP

AA-105

DESIGN	BY R. Howell	CHECKED S. Danielson	LOAD & RESISTANCE FACTOR DESIGN	LIVE LOADING: PERMIT DESIGN VEHICLE
DETAILS	BY Z. Sadat	CHECKED R. Howell	LAYOUT	BY / CHECKED
QUANTITIES	BY	CHECKED	SPECIFICATIONS	BY / PLANS AND SPECS COMPARED

PREPARED FOR THE STATE OF CALIFORNIA DEPARTMENT OF TRANSPORTATION

PROJECT ENGINEER

BRIDGE NO. / POST MILE

SFOBB TOLL PLAZA CANOPY RENOVATIONS

ROOF PLAN

DESIGN GENERAL PLAN SHEET (ENGLISH) (REV. 06-01-09)

ORIGINAL SCALE IN INCHES FOR REDUCED PLANS 0 1 2 3

CU BATA011
EA 4G2801/4G2901

DISREGARD PRINTS BEARING EARLIER REVISION DATES

REVISION DATES (PRELIMINARY STAGE ONLY)

SHEET 7 OF 64

C:\Documents and Settings\reyesl\My Documents\SFOBB-Canopy-Arch_reyesl.rvt

6/26/2012 2:16:25 PM

DIST.	COUNTY	ROUTE	POST MILES TOTAL PROJECT	SHEET NO.	TOTAL SHEETS
04	Ala	80	2.0/2.3	27	83

REGISTERED ARCHITECT — DATE 06/26/2012

PLANS APPROVAL DATE

STATE OF CALIFORNIA — SCOTT L. DANIELSON — 6/30/2013 — CERTIFICATE NO. C 6148 — REGISTERED ARCHITECT

The State of California or its officers or agents shall not be responsible for the accuracy or completeness of electronic copies of this plan sheet.

Parsons Brinckerhoff Inc.
303 Second Street, Suite 700N
San Francisco, CA 94107

Bay Area Toll Authority
101 Eight Street
Oakland, CA 94607

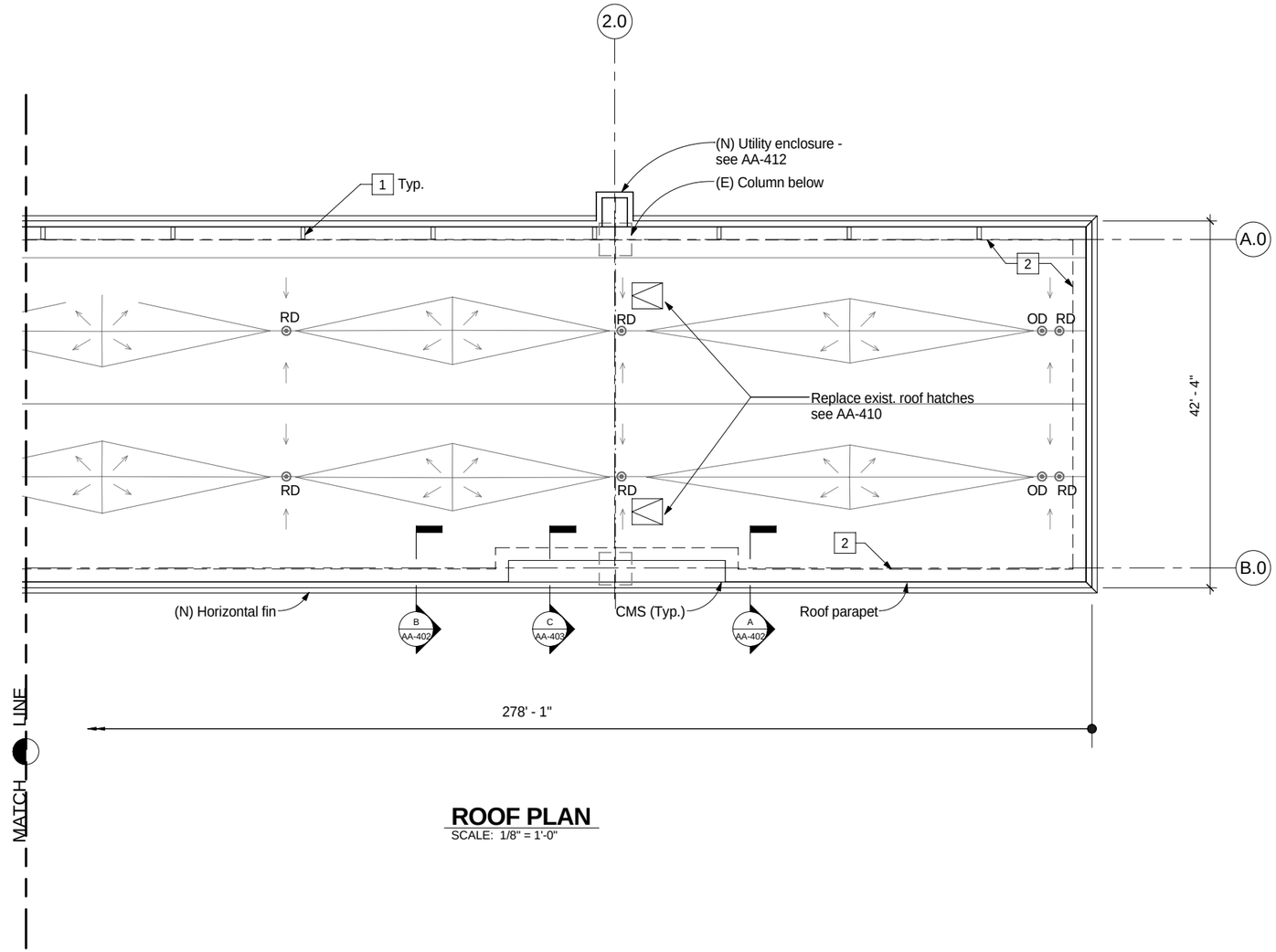

ROOF PLAN

SCALE: 1/8" = 1'-0"

NOTES:

1. Remove all exist CCTV cameras (17).
2. New roofing and counterflashing at parapet work shall extnd 18" over existing roofing.

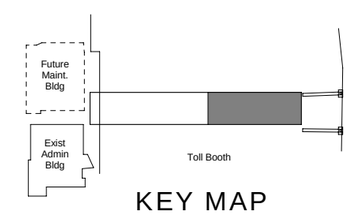

KEY MAP

AA-106

DESIGN	BY R. Howell	CHECKED S. Danielson	LOAD & RESISTANCE FACTOR DESIGN	LIVE LOADING: PERMIT DESIGN VEHICLE
DETAILS	BY Z. Sadat	CHECKED R. Howell	LAYOUT	BY / CHECKED
QUANTITIES	BY	CHECKED	SPECIFICATIONS	BY / PLANS AND SPECS COMPARED

PREPARED FOR THE STATE OF CALIFORNIA DEPARTMENT OF TRANSPORTATION

PROJECT ENGINEER

BRIDGE NO. _____ POST MILE _____

SFOBB TOLL PLAZA CANOPY RENOVATIONS

ROOF PLAN

DESIGN GENERAL PLAN SHEET (ENGLISH) (REV. 06-01-09)

ORIGINAL SCALE IN INCHES FOR REDUCED PLANS 0 1 2 3

CU BATA011
EA 4G2801/4G2901

DISREGARD PRINTS BEARING EARLIER REVISION DATES

REVISION DATES (PRELIMINARY STAGE ONLY)

SHEET 8 OF 64

C:\Documents and Settings\reyesl\My Documents\SFOBB-Canopy-Arch_reyesl.rvt

6/26/2012 2:16:26 PM

DIST.	COUNTY	ROUTE	POST MILES TOTAL PROJECT	SHEET NO.	TOTAL SHEETS
04	Ala	80	2.0/2.3	28	83

REGISTERED ARCHITECT — DATE 06/26/2012

PLANS APPROVAL DATE

STATE OF CALIFORNIA — SCOTT L. DANIELSON — 6/30/2013 — CERTIFICATE NO. C 61248 — REGISTERED ARCHITECT

The State of California or its officers or agents shall not be responsible for the accuracy or completeness of electronic copies of this plan sheet.

Parsons Brinckerhoff Inc.
303 Second Street, Suite 700N
San Francisco, CA 94107

Bay Area Toll Authority
101 Eight Street
Oakland, CA 94607

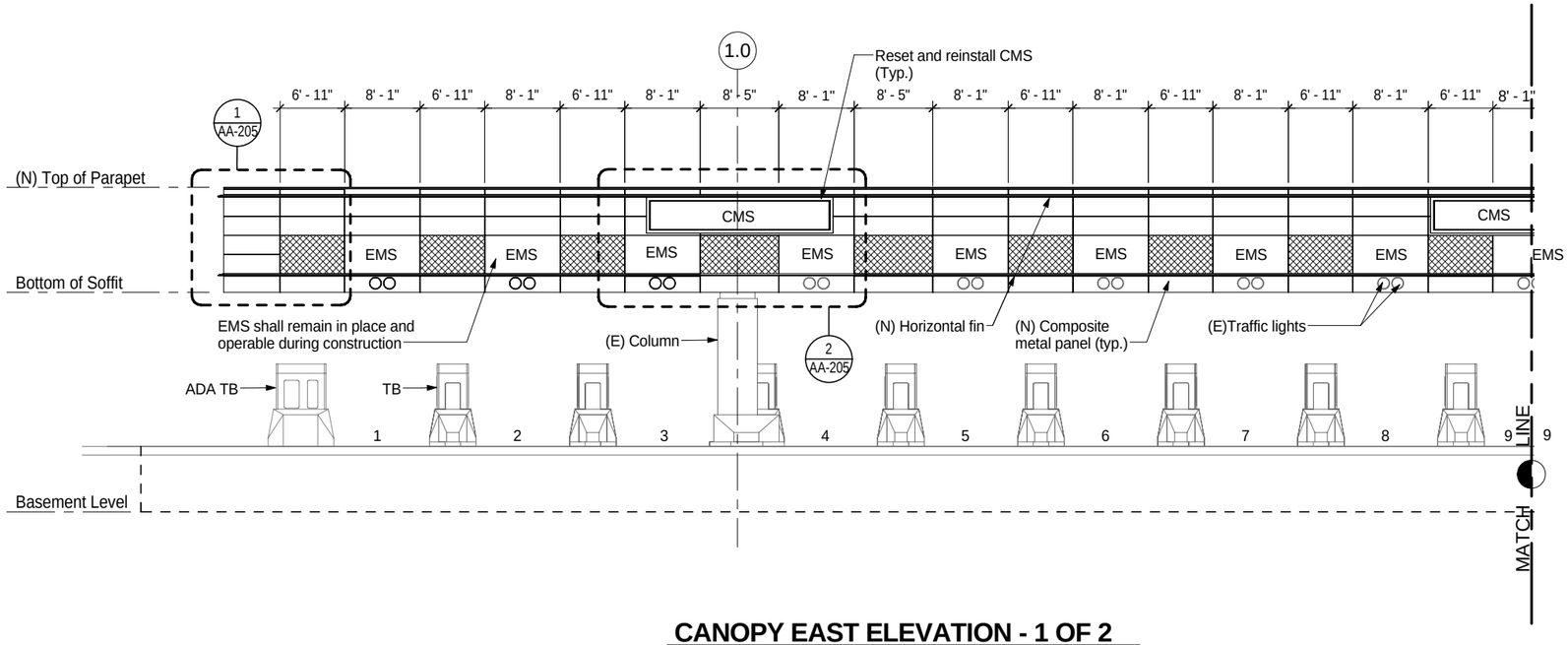

CANOPY EAST ELEVATION - 1 OF 2

SCALE: 1/8" = 1'-0"

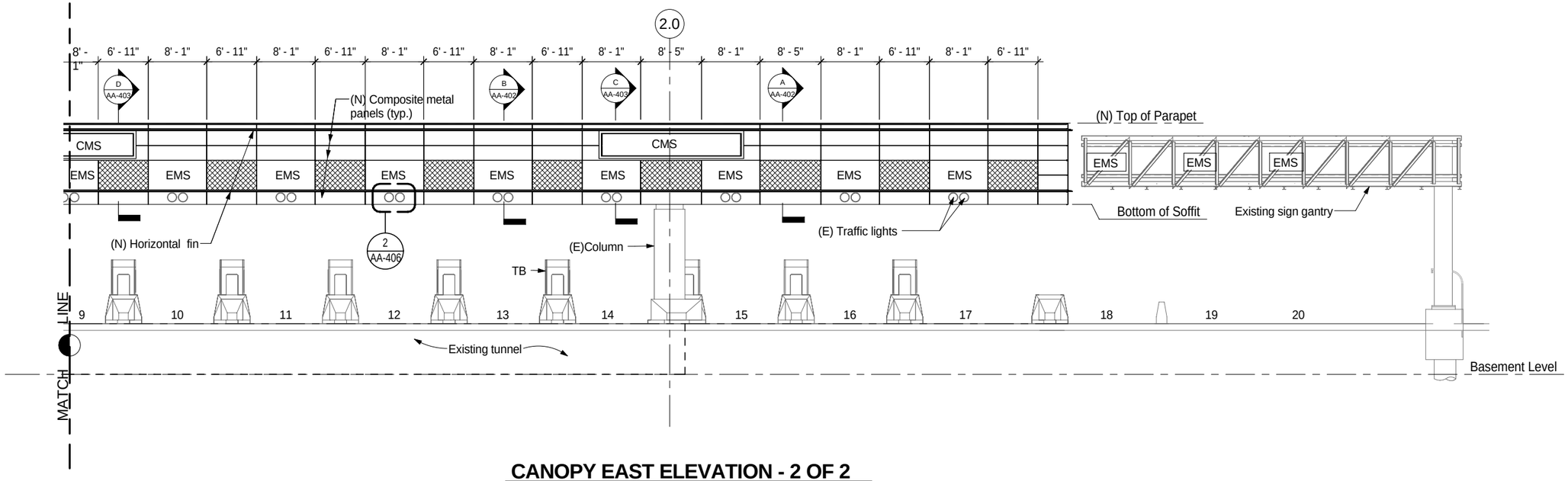

CANOPY EAST ELEVATION - 2 OF 2

SCALE: 1/8" = 1'-0"

NOTES:

1. All panel joints are 1/2" wide unless noted otherwise.
2. All vertical panel joints align with the faces of the existing tubular steel sub-frame per existing.
3. This sheet shows the extent of the new cladding. Remove all existing cladding.

LEGEND:

Black composite panel

AA-201

DESIGN	BY R. Howell	CHECKED S. Danielson	LOAD & RESISTANCE FACTOR DESIGN	LIVE LOADING: PERMIT DESIGN VEHICLE
DETAILS	BY Z. Sadat	CHECKED R. Howell	LAYOUT	BY / CHECKED
QUANTITIES	BY	CHECKED	SPECIFICATIONS	BY / PLANS AND SPECS COMPARED

PREPARED FOR THE STATE OF CALIFORNIA DEPARTMENT OF TRANSPORTATION

PROJECT ENGINEER

BRIDGE NO.

POST MILE

SFOBB TOLL PLAZA CANOPY RENOVATIONS

EAST ELEVATION

DESIGN GENERAL PLAN SHEET (ENGLISH) (REV. 06-01-09)

ORIGINAL SCALE IN INCHES FOR REDUCED PLANS 0 1 2 3

CU BATA011
EA 4G2801/4G2901

DISREGARD PRINTS BEARING EARLIER REVISION DATES

REVISION DATES (PRELIMINARY STAGE ONLY)

SHEET 9 OF 64

C:\Documents and Settings\reyesl\My Documents\SFOBB-Canopy-Arch_reyesl.rvt

6/26/2012 2:16:27 PM

DIST.	COUNTY	ROUTE	POST MILES TOTAL PROJECT	SHEET NO.	TOTAL SHEETS
04	Ala	80	2.0/2.3	29	83

REGISTERED ARCHITECT — DATE 06/26/2012

PLANS APPROVAL DATE

STATE OF CALIFORNIA — SCOTT L. DANIELSON — 6/30/2013 — CERTIFICATE NO. C 6148 — REGISTERED ARCHITECT

The State of California or its officers or agents shall not be responsible for the accuracy or completeness of electronic copies of this plan sheet.

Parsons Brinckerhoff Inc.
303 Second Street, Suite 700N
San Francisco, CA 94107

Bay Area Toll Authority
101 Eight Street
Oakland, CA 94607

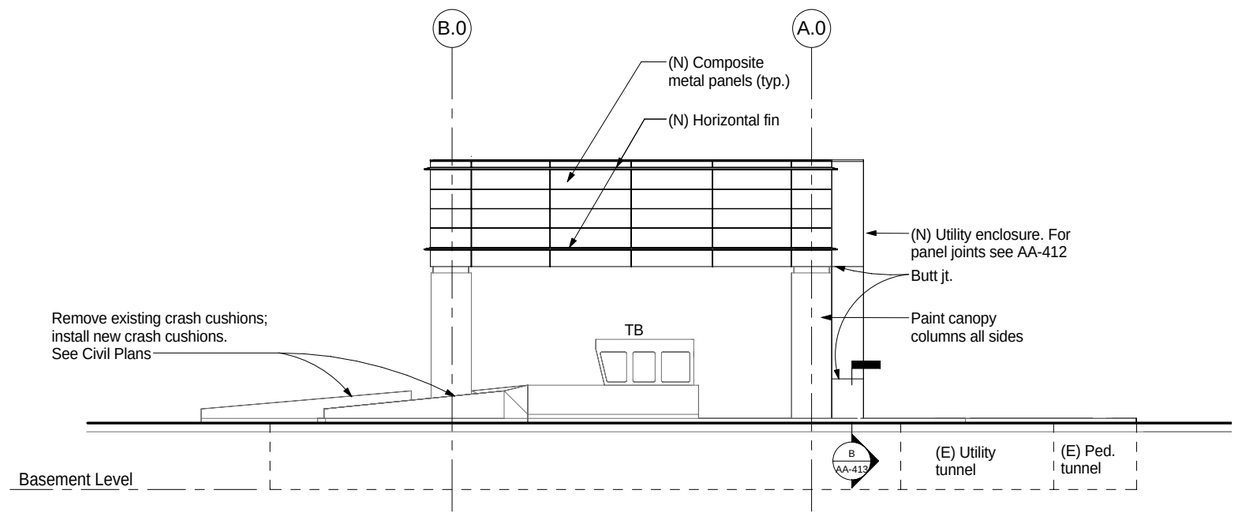

CANOPY NORTH ELEVATION

SCALE: 1/8" = 1'-0"

NOTES:

1. All panel joints are 1/2" wide unless noted otherwise.
2. All vertical panel joints align with the faces of the existing tubular steel sub-frame per existing.
3. This sheet shows the extent of the new cladding. Remove all existing cladding.

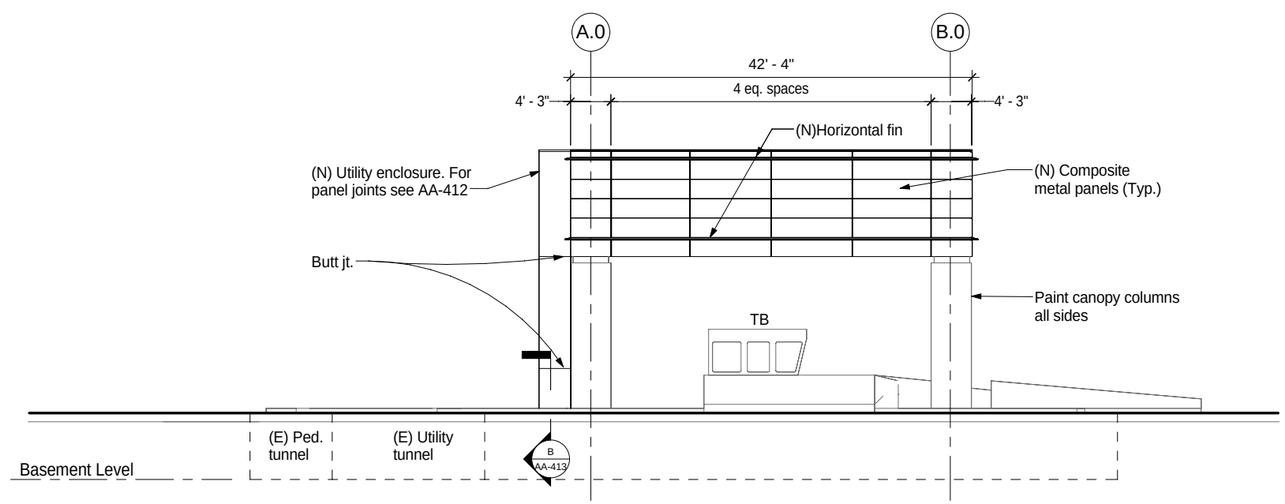

CANOPY SOUTH ELEVATION

SCALE: 1/8" = 1'-0"

AA-202

DESIGN	BY R. Howell	CHECKED S. Danielson	LOAD & RESISTANCE FACTOR DESIGN	LIVE LOADING: PERMIT DESIGN VEHICLE	
DETAILS	BY Z. Sadat	CHECKED R. Howell	LAYOUT	BY	CHECKED
QUANTITIES	BY	CHECKED	SPECIFICATIONS	BY	PLANS AND SPECS COMPARED

PREPARED FOR THE STATE OF CALIFORNIA DEPARTMENT OF TRANSPORTATION

PROJECT ENGINEER

BRIDGE NO.

POST MILE

SFOBB TOLL PLAZA CANOPY RENOVATIONS

NORTH AND SOUTH ELEVATIONS

DESIGN GENERAL PLAN SHEET (ENGLISH) (REV. 06-01-09)

ORIGINAL SCALE IN INCHES FOR REDUCED PLANS 0 1 2 3

CU BATA011
EA 4G2801/4G2901

DISREGARD PRINTS BEARING EARLIER REVISION DATES

REVISION DATES (PRELIMINARY STAGE ONLY)

SHEET 10 OF 64

C:\Documents and Settings\reyesl\My Documents\SFOBB-Canopy-Arch_reyesl.rvt

6/26/2012 2:16:31 PM

DIST.	COUNTY	ROUTE	POST MILES TOTAL PROJECT	SHEET NO.	TOTAL SHEETS
04	Ala	80	2.0/2.3	30	83

REGISTERED ARCHITECT — DATE 06/26/2012

PLANS APPROVAL DATE

STATE OF CALIFORNIA — SCOTT L. DANIELSON — 6/30/2013 — CERTIFICATE NO. C 6148 — REGISTERED ARCHITECT

The State of California or its officers or agents shall not be responsible for the accuracy or completeness of electronic copies of this plan sheet.

Parsons Brinckerhoff Inc.
303 Second Street, Suite 700N
San Francisco, CA 94107

Bay Area Toll Authority
101 Eight Street
Oakland, CA 94607

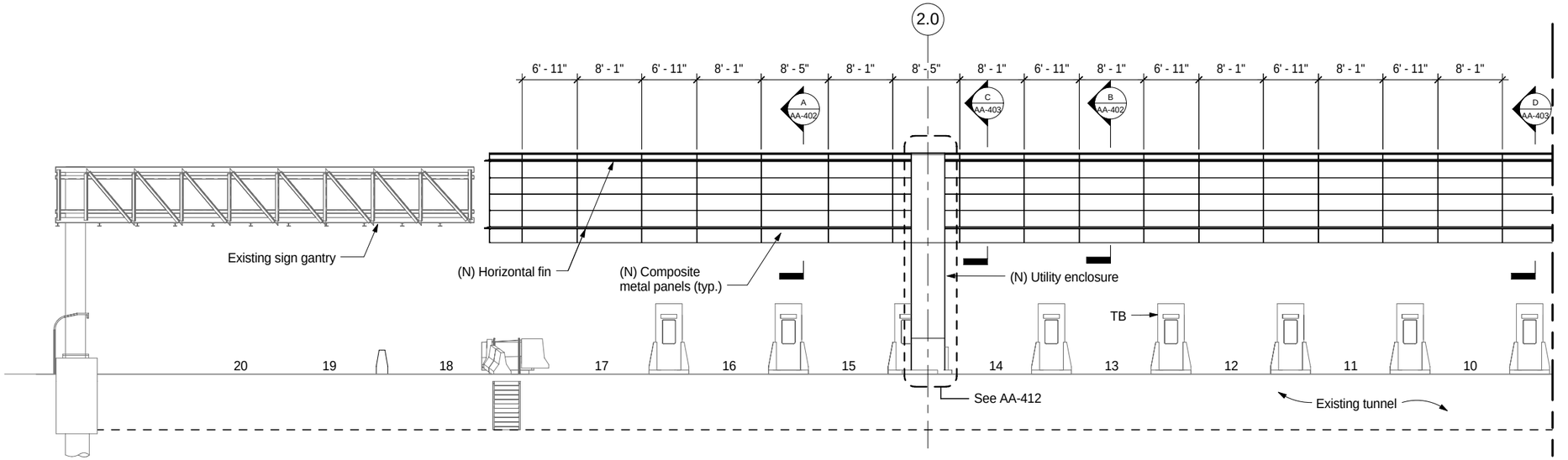

CANOPY WEST ELEVATION (1 OF 2)

SCALE: 1/8" = 1'-0"

MATCH LINE

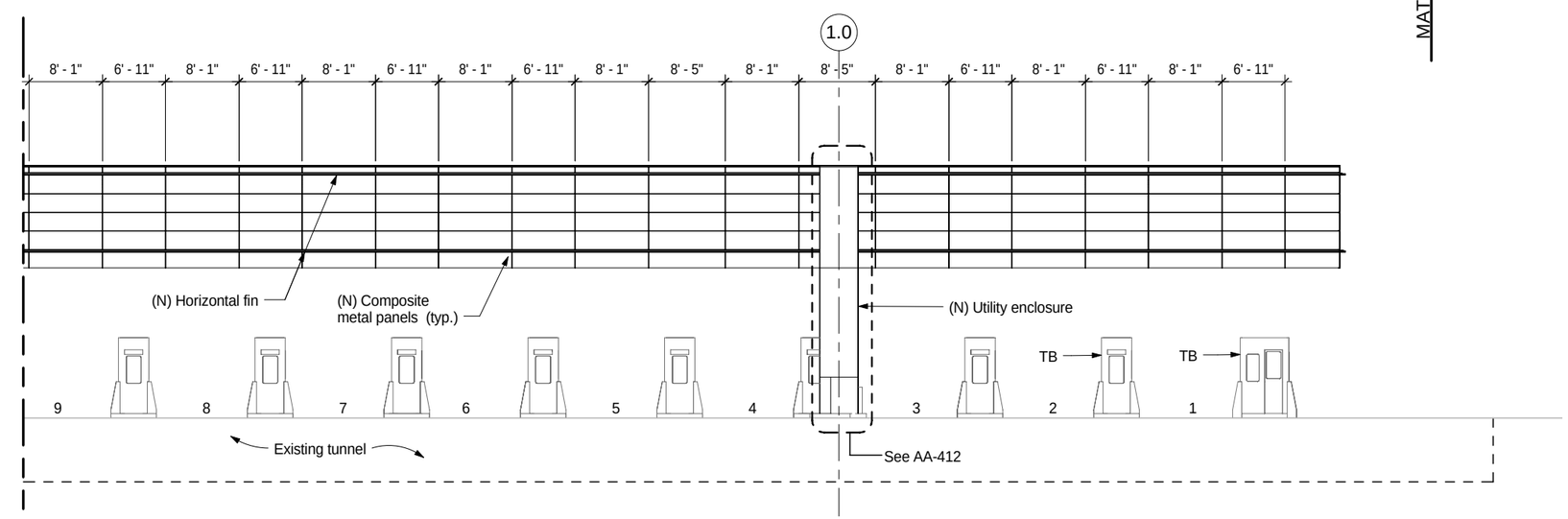

CANOPY WEST ELEVATION (2 OF 2)

SCALE: 1/8" = 1'-0"

MATCH LINE

NOTES:

1. All panel joints are 1/2" wide unless noted otherwise.
2. All vertical panel joints align with the faces of the existing tubular steel sub-frame per existing.
3. This sheet shows the extent of the new cladding. Remove all existing cladding.

AA-203

	BY		CHECKED			
DESIGN	R. Howell	S. Danielson	LOAD & RESISTANCE FACTOR DESIGN	LIVE LOADING: PERMIT DESIGN VEHICLE		
DETAILS	Z. Sadat	R. Howell	LAYOUT	BY	CHECKED	
QUANTITIES			SPECIFICATIONS	BY	PLANS AND SPECS COMPARED	

PREPARED FOR THE STATE OF CALIFORNIA DEPARTMENT OF TRANSPORTATION

PROJECT ENGINEER

BRIDGE NO.

POST MILE

SFOBB TOLL PLAZA CANOPY RENOVATIONS

WEST ELEVATION

DESIGN GENERAL PLAN SHEET (ENGLISH) (REV. 06-01-09)

ORIGINAL SCALE IN INCHES FOR REDUCED PLANS 0 1 2 3

CU BATA011
EA 4G2801/4G2901

DISREGARD PRINTS BEARING EARLIER REVISION DATES

REVISION DATES (PRELIMINARY STAGE ONLY)

SHEET 11 OF 64

C:\Documents and Settings\reyesl\My Documents\SFOBB-Canopy-Arch_reyesl.rvt

6/26/2012 2:16:33 PM

DIST.	COUNTY	ROUTE	POST MILES TOTAL PROJECT	SHEET NO.	TOTAL SHEETS
04	Ala	80	2.0/2.3	31	83

REGISTERED ARCHITECT — DATE 06/26/2012

PLANS APPROVAL DATE

STATE OF CALIFORNIA — SCOTT L. DANIELSON — 6/30/2013 — CERTIFICATE NO. C 61248 — REGISTERED ARCHITECT

The State of California or its officers or agents shall not be responsible for the accuracy or completeness of electronic copies of this plan sheet.

Parsons Brinckerhoff Inc.
303 Second Street, Suite 700N
San Francisco, CA 94107

Bay Area Toll Authority
101 Eight Street
Oakland, CA 94607

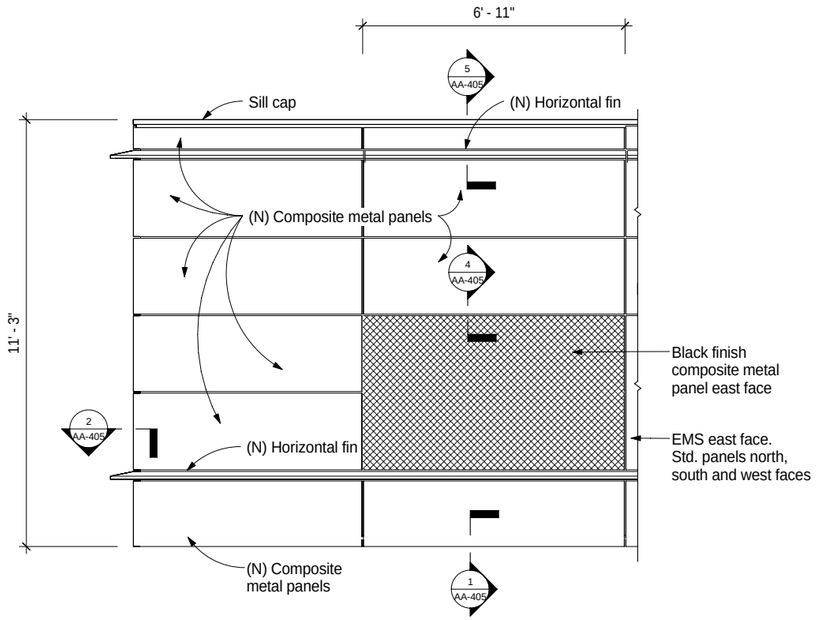

1 PANEL ELEVATION @ ENDS

SCALE: 1/2" = 1'-0"

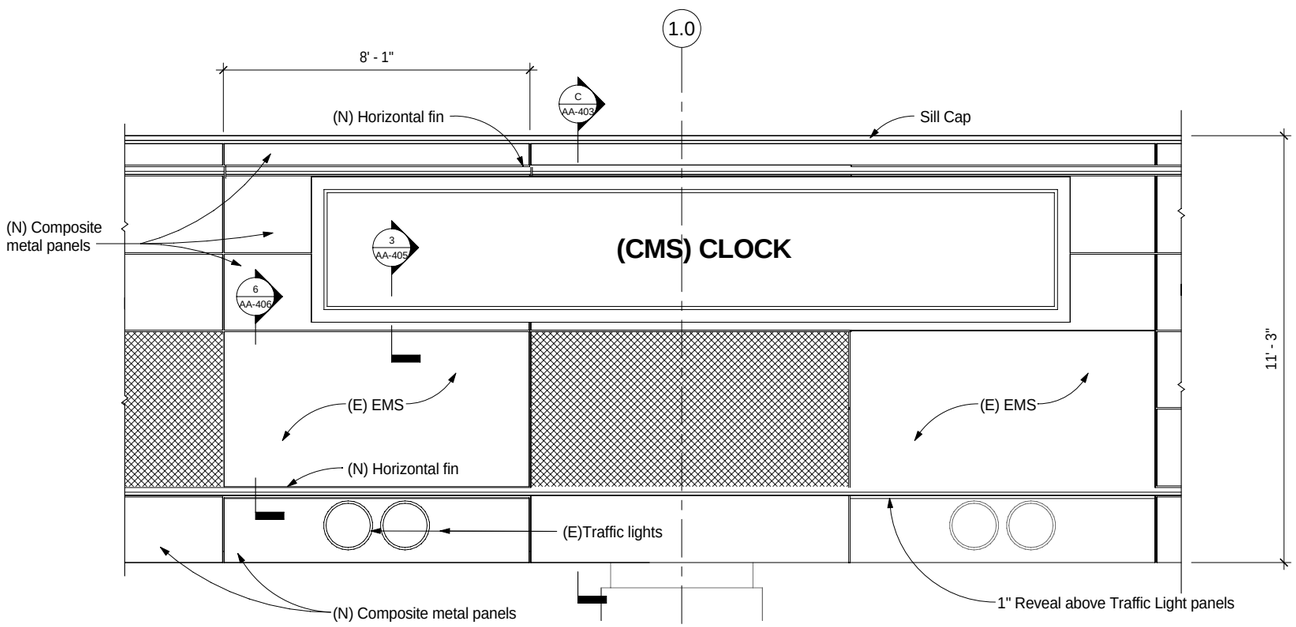

2 PANEL ELEVATION @ CMS AND EMS

SCALE: 1/2" = 1'-0"

AA-205

DESIGN	BY R. Howell	CHECKED S. Danielson	LOAD & RESISTANCE FACTOR DESIGN	LIVE LOADING: PERMIT DESIGN VEHICLE
DETAILS	BY Z. Sadat	CHECKED R. Howell	LAYOUT BY	CHECKED
QUANTITIES	BY	CHECKED	SPECIFICATIONS BY	PLANS AND SPECS COMPARED

PREPARED FOR THE STATE OF CALIFORNIA DEPARTMENT OF TRANSPORTATION

PROJECT ENGINEER

BRIDGE NO.

POST MILE

SFOBB TOLL PLAZA CANOPY RENOVATIONS

PARTIAL ELEVATIONS

DESIGN GENERAL PLAN SHEET (ENGLISH) (REV. 06-01-09)

ORIGINAL SCALE IN INCHES FOR REDUCED PLANS 0 1 2 3

CU BATA011
EA 4G2801/4G2901

DISREGARD PRINTS BEARING EARLIER REVISION DATES

REVISION DATES (PRELIMINARY STAGE ONLY)

SHEET 12 OF 64

C:\Documents and Settings\reyesl\My Documents\SFOBB-Canopy-Arch_reyesl.rvt

6/26/2012 2:16:34 PM

DIST.	COUNTY	ROUTE	POST MILES TOTAL PROJECT	SHEET NO.	TOTAL SHEETS
04	Ala	80	2.0/2.3	32	83

REGISTERED ARCHITECT — DATE 06/26/2012

PLANS APPROVAL DATE

STATE OF CALIFORNIA — SCOTT L. DANIELSON — 6/30/2013 — CERTIFICATE NO. C 6148 — REGISTERED ARCHITECT

The State of California or its officers or agents shall not be responsible for the accuracy or completeness of electronic copies of this plan sheet.

Parsons Brinckerhoff Inc.
303 Second Street, Suite 700N
San Francisco, CA 94107

Bay Area Toll Authority
101 Eight Street
Oakland, CA 94607

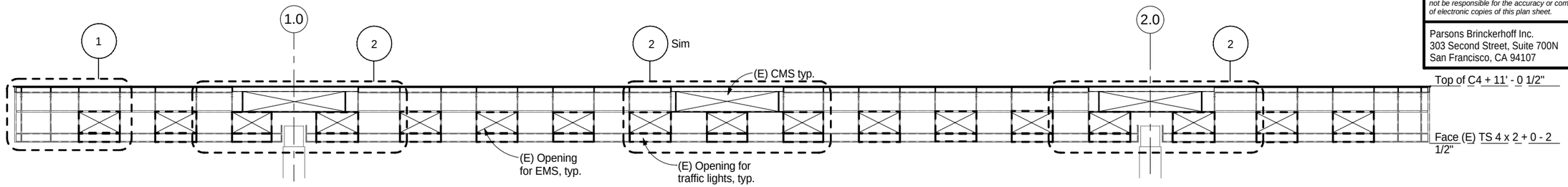

ARCHITECTURAL FRAMING - EAST ELEVATION

SCALE: 3/32" = 1'-0"

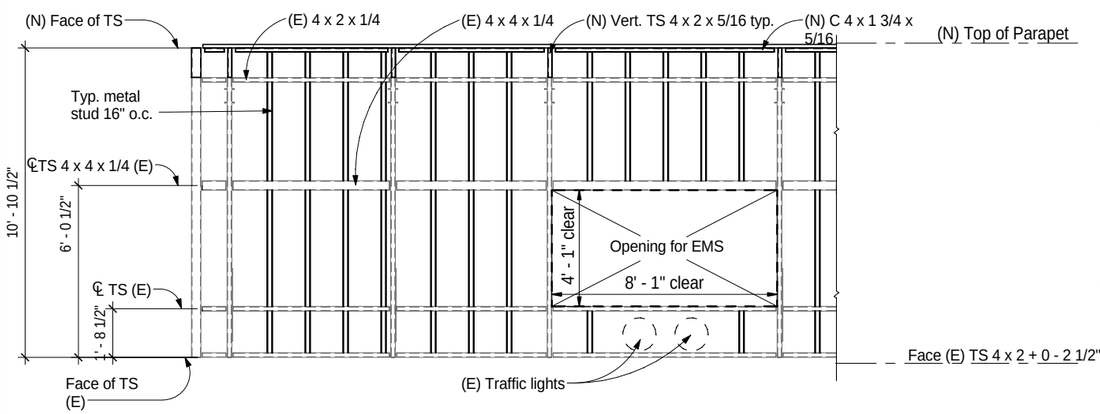

1 PARTIAL EAST SUB-FRAME ELEVATION AT END

SCALE: 3/8" = 1'-0"

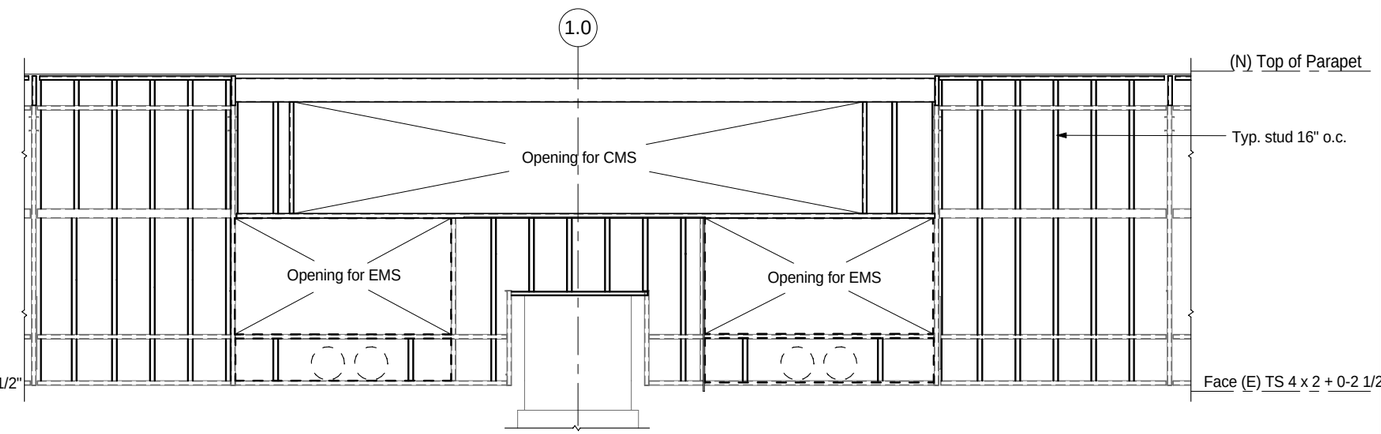

2 PARTIAL EAST SUB-FRAME ELEVATION AT TYP. COLUMN

SCALE: 3/8" = 1'-0"

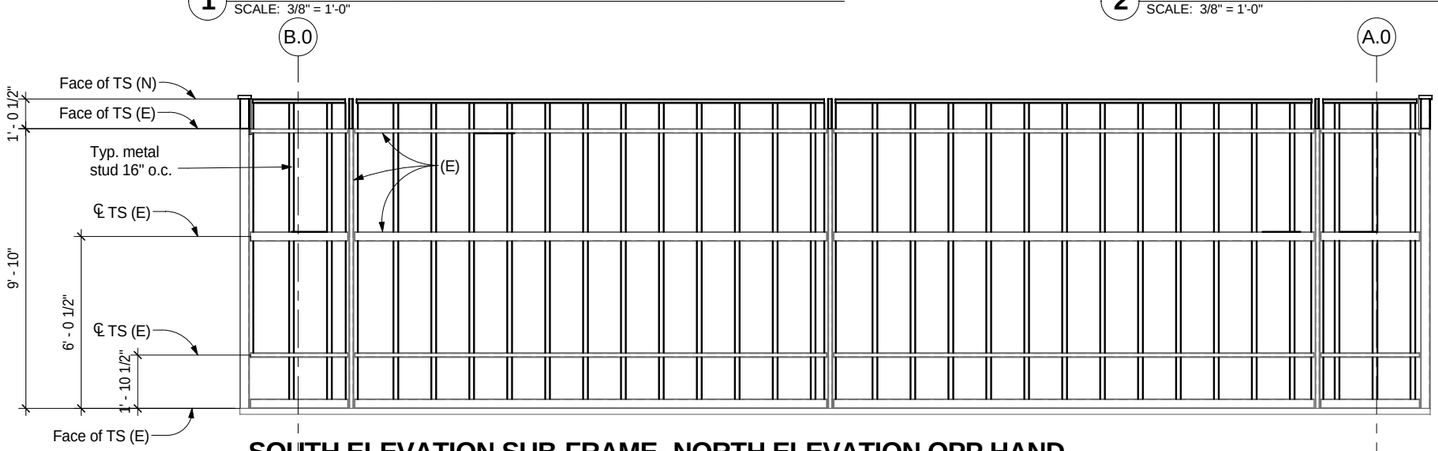

SOUTH ELEVATION SUB-FRAME- NORTH ELEVATION OPP.HAND

SCALE: 3/8" = 1'-0"

NOTES:

1. See General Notes on AA-002 for metal studs at plywood.
2. Head and sill runners shall be installed (not shown on this drawing for clarity)
3. Metal studs shall be 4" wide - 18ga.

AA-206

DESIGN	BY R. Howell	CHECKED S. Danielson	
DETAILS	BY Z. Sadat	CHECKED R. Howell	
QUANTITIES	BY	CHECKED	

PREPARED FOR THE STATE OF CALIFORNIA DEPARTMENT OF TRANSPORTATION

PROJECT ENGINEER

BRIDGE NO.

POST MILE

SFOBB TOLL PLAZA CANOPY RENOVATIONS

CANOPY FRAMING

DESIGN GENERAL PLAN SHEET (ENGLISH) (REV. 06-01-09)

ORIGINAL SCALE IN INCHES FOR REDUCED PLANS 0 1 2 3

CU BATA011
EA 4G2801/4G2901

DISREGARD PRINTS BEARING EARLIER REVISION DATES

REVISION DATES (PRELIMINARY STAGE ONLY)

SHEET 13 OF 64

C:\Documents and Settings\reyesl\My Documents\SFOBB-Canopy-Arch_reyesl.rvt

6/26/2012 2:16:36 PM

DIST.	COUNTY	ROUTE	POST MILES TOTAL PROJECT	SHEET NO.	TOTAL SHEETS
04	Ala	80	2.0/2.3	33	83

REGISTERED ARCHITECT — DATE 06/26/2012

PLANS APPROVAL DATE

STATE OF CALIFORNIA — SCOTT L. DANIELSON — 6/30/2013 — CERTIFICATE NO. C 6148 — REGISTERED ARCHITECT

The State of California or its officers or agents shall not be responsible for the accuracy or completeness of electronic copies of this plan sheet.

Parsons Brinckerhoff Inc.
303 Second Street, Suite 700N
San Francisco, CA 94107

Bay Area Toll Authority
101 Eight Street
Oakland, CA 94607

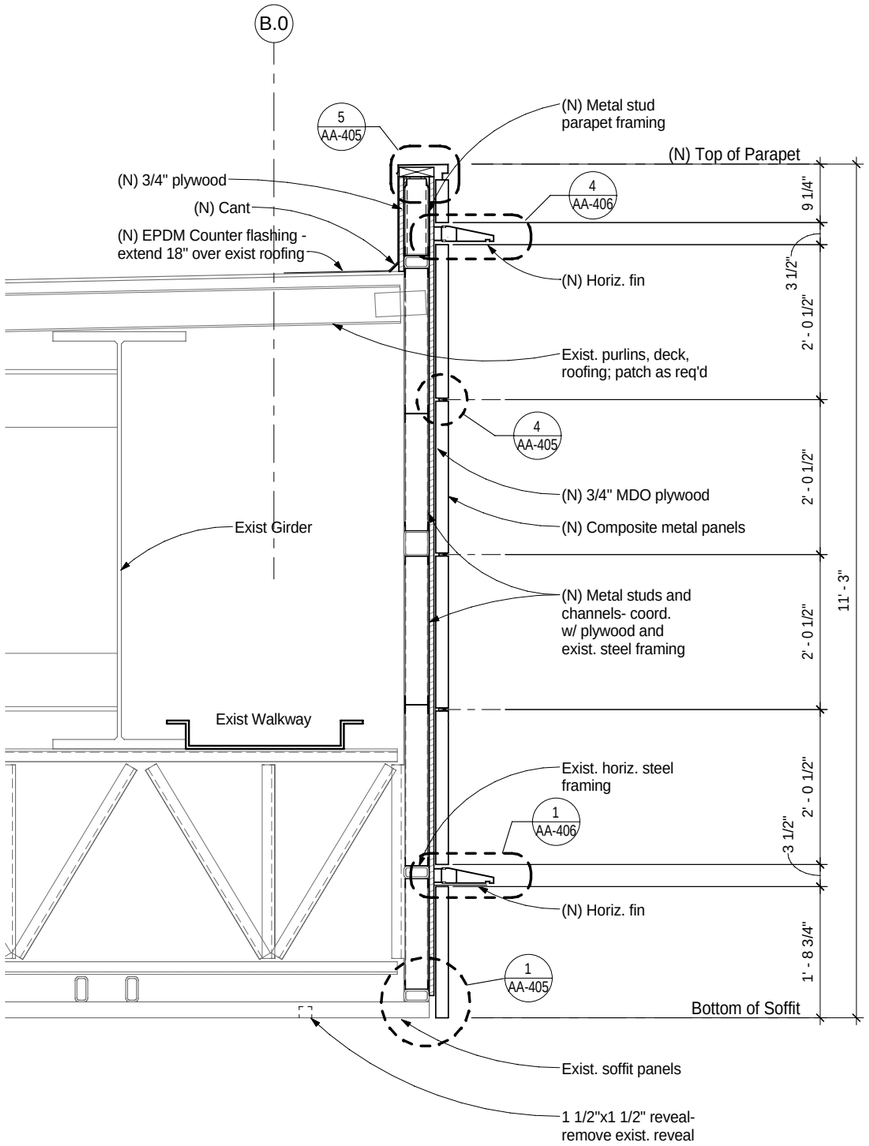

A SECTION- TYPICAL
SCALE: 1" = 1'-0"

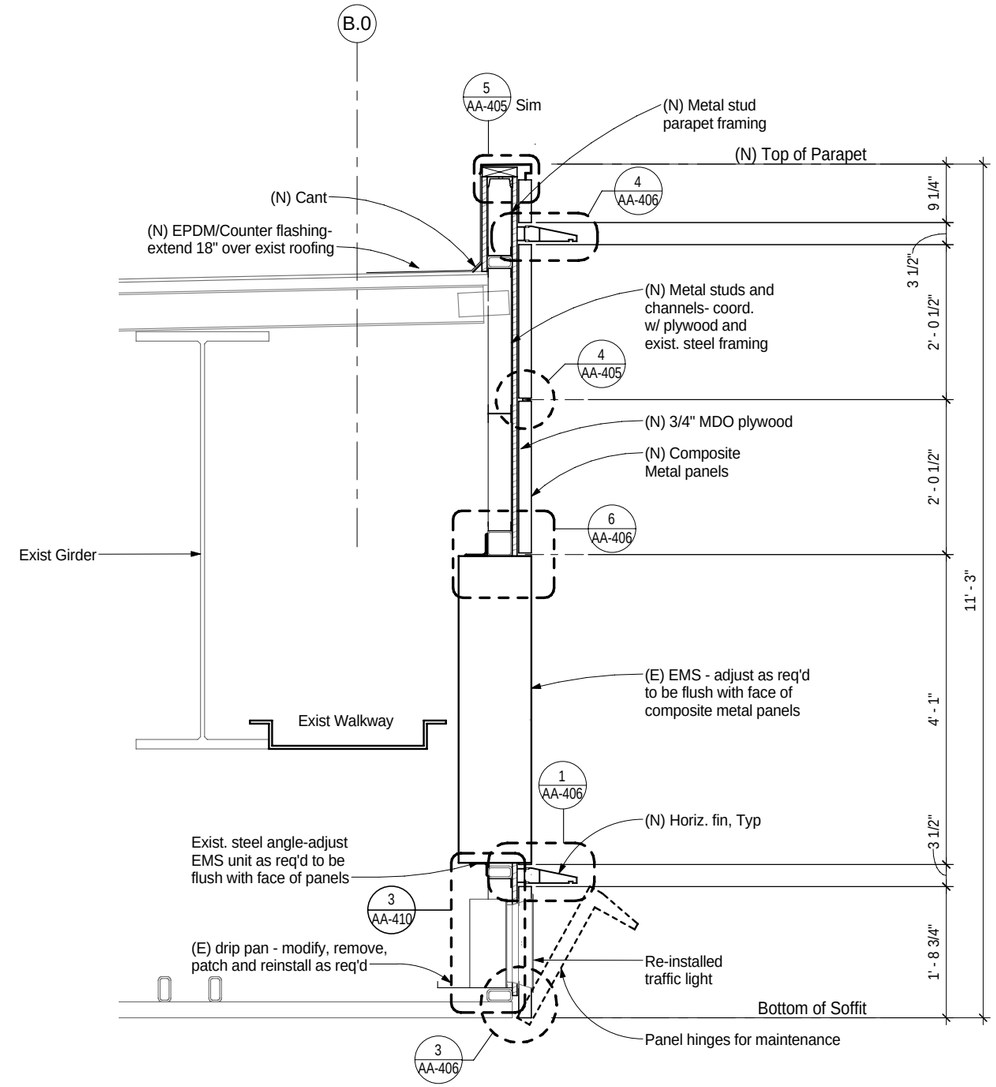

B SECTION AT EMS
SCALE: 1" = 1'-0"

AA-402

DESIGN	BY R. Howell	CHECKED S. Danielson	
DETAILS	BY L. Reyes	CHECKED R. Howell	
QUANTITIES	BY	CHECKED	

PREPARED FOR THE STATE OF CALIFORNIA DEPARTMENT OF TRANSPORTATION

PROJECT ENGINEER

BRIDGE NO.

POST MILE

SFOBB TOLL PLAZA CANOPY RENOVATIONS
WALL SECTIONS

DESIGN GENERAL PLAN SHEET (ENGLISH) (REV. 06-01-09)

ORIGINAL SCALE IN INCHES FOR REDUCED PLANS 0 1 2 3

CU BATA011
EA 4G2801/4G2901

DISREGARD PRINTS BEARING EARLIER REVISION DATES

REVISION DATES (PRELIMINARY STAGE ONLY)

SHEET 14 OF 64

C:\Documents and Settings\reyesl\My Documents\SFOBB-Canopy-Arch_reyesl.rvt

6/26/2012 2:16:37 PM

DIST.	COUNTY	ROUTE	POST MILES TOTAL PROJECT	SHEET NO.	TOTAL SHEETS
04	Ala	80	2.0/2.3	34	83

REGISTERED ARCHITECT — DATE 06/26/2012

PLANS APPROVAL DATE

STATE OF CALIFORNIA — SCOTT L. DANIELSON — 6/30/2013 — CERTIFICATE NO. C 61248 — REGISTERED ARCHITECT

The State of California or its officers or agents shall not be responsible for the accuracy or completeness of electronic copies of this plan sheet.

Parsons Brinckerhoff Inc.
303 Second Street, Suite 700N
San Francisco, CA 94107

Bay Area Toll Authority
101 Eight Street
Oakland, CA 94607

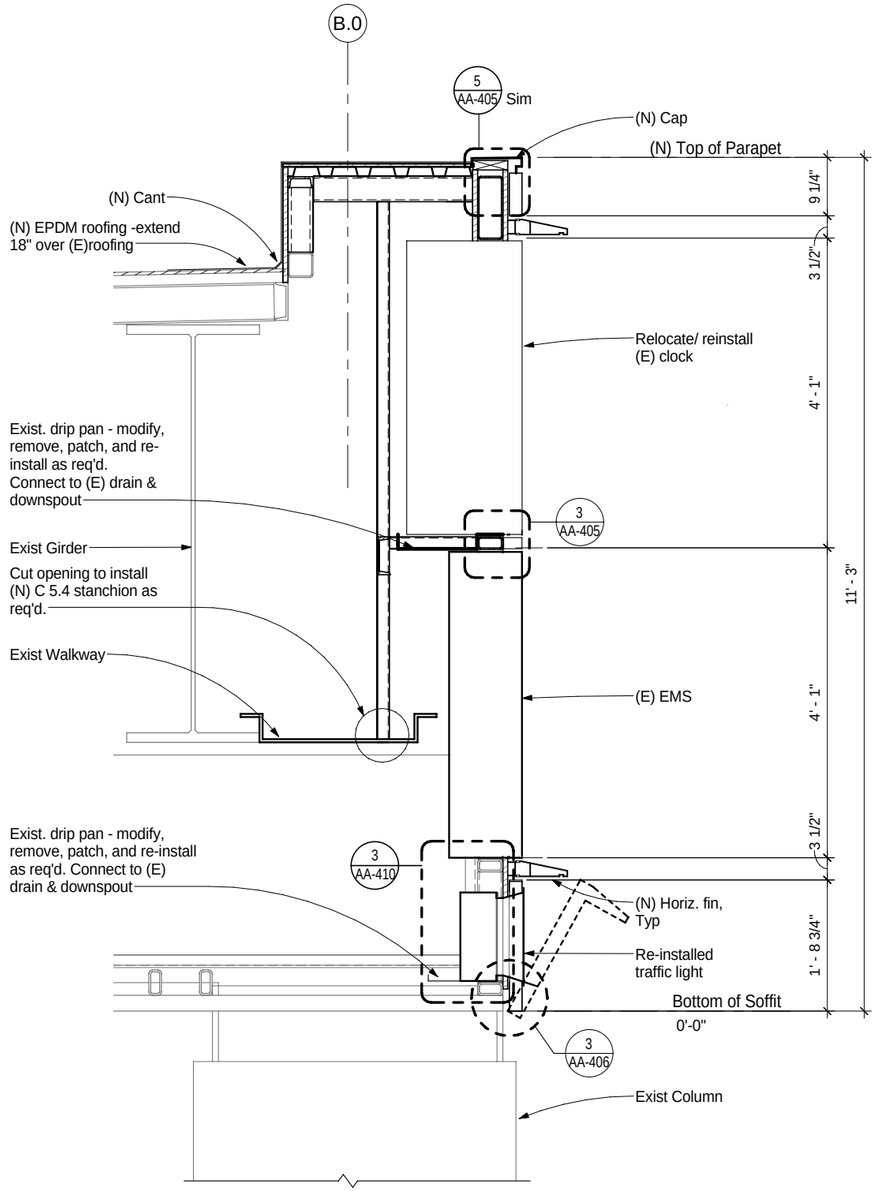

C SECTION AT CMS AND EMS
SCALE: 1" = 1'-0"

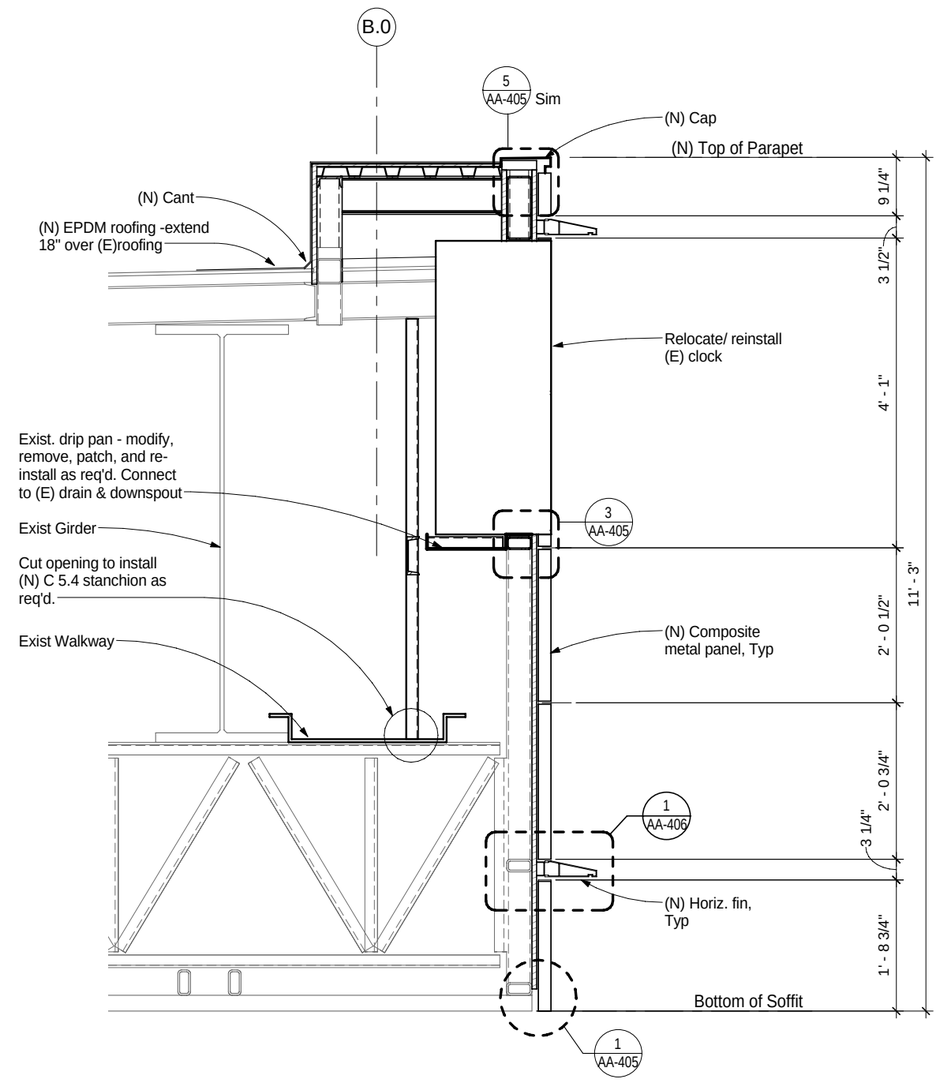

D SECTION AT CMS
SCALE: 1" = 1'-0"

AA-403

DESIGN	BY R. Howell	CHECKED S. Danielson	
DETAILS	BY L. Reyes	CHECKED R. Howell	
QUANTITIES	BY	CHECKED	

PREPARED FOR THE
STATE OF CALIFORNIA
DEPARTMENT OF TRANSPORTATION

PROJECT ENGINEER

BRIDGE NO.

POST MILE

SFOBB TOLL PLAZA CANOPY RENOVATIONS
WALL SECTIONS

DESIGN GENERAL PLAN SHEET (ENGLISH) (REV. 06-01-09)

ORIGINAL SCALE IN INCHES FOR REDUCED PLANS 0 1 2 3

CU BATA011
EA 4G2801/4G2901

DISREGARD PRINTS BEARING EARLIER REVISION DATES

REVISION DATES (PRELIMINARY STAGE ONLY)

SHEET 15 OF 64

C:\Documents and Settings\reyesl\My Documents\SFOBB-Canopy-Arch_reyesl.rvt

6/26/2012 2:16:38 PM

DIST.	COUNTY	ROUTE	POST MILES TOTAL PROJECT	SHEET NO.	TOTAL SHEETS
04	Ala	80	2.0/2.3	35	83

REGISTERED ARCHITECT — DATE 06/26/2012

PLANS APPROVAL DATE

STATE OF CALIFORNIA — SCOTT L. DANIELSON — 6/30/2013 — CERTIFICATE NO. C 61AB — REGISTERED ARCHITECT

The State of California or its officers or agents shall not be responsible for the accuracy or completeness of electronic copies of this plan sheet.

Parsons Brinckerhoff Inc.
303 Second Street, Suite 700N
San Francisco, CA 94107

Bay Area Toll Authority
101 Eight Street
Oakland, CA 94607

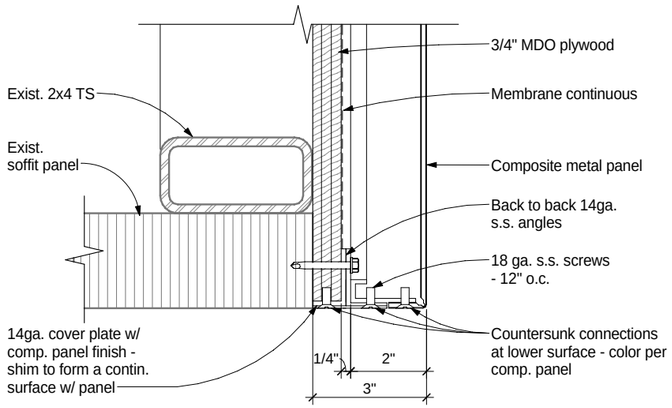

1 SECTION- PANEL AT SOFFIT
SCALE: 6" = 1'-0"

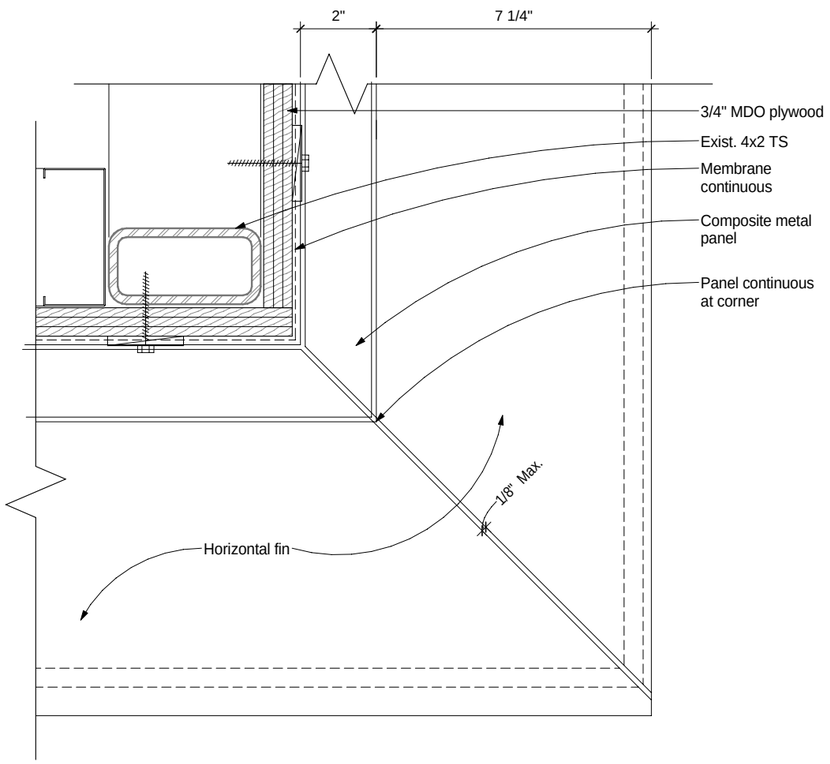

2 PLAN- TYPICAL CORNER
SCALE: 6" = 1'-0"

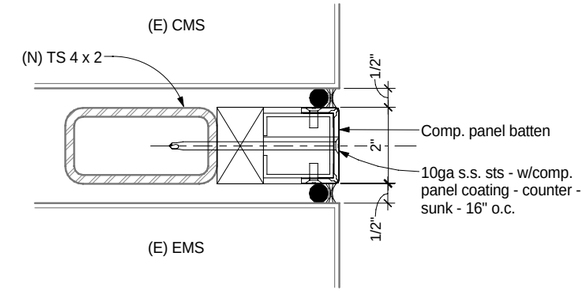

3 SECTION - TYP HORIZ. BATTEN
SCALE: 6" = 1'-0"

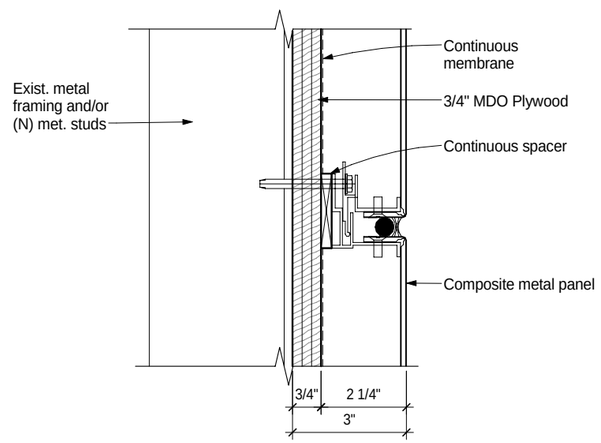

4 SECTION- TYP. HORIZ. JOINT
SCALE: 6" = 1'-0"

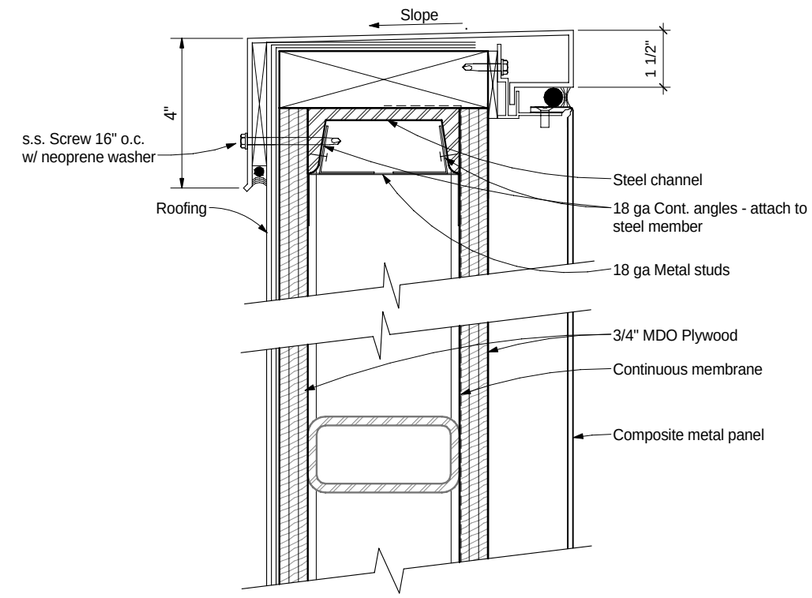

5 SECTION- TYP. PARAPET CAP
SCALE: 6" = 1'-0"

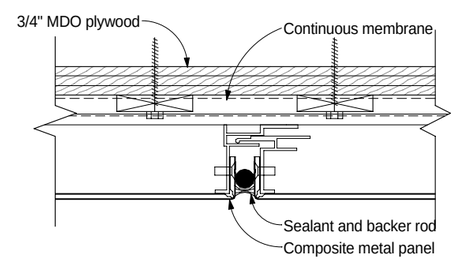

6 PLAN- TYP. VERT. JOINT
SCALE: 6" = 1'-0"

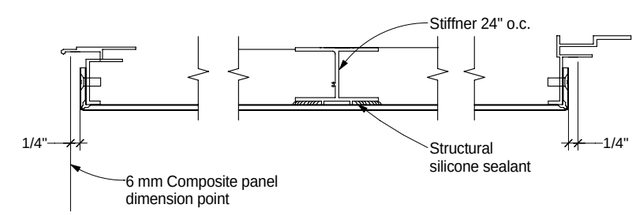

PLAN - TYPICAL PANEL
SCALE: 6" = 1'-0"

AA-405

DESIGN	BY R. Howell	CHECKED S. Danielson	
DETAILS	BY L. Reyes	CHECKED R. Howell	
QUANTITIES	BY	CHECKED	

PREPARED FOR THE STATE OF CALIFORNIA DEPARTMENT OF TRANSPORTATION

PROJECT ENGINEER

BRIDGE NO.

POST MILE

SFOBB TOLL PLAZA CANOPY RENOVATIONS
WALL DETAILS

DESIGN GENERAL PLAN SHEET (ENGLISH) (REV. 06-01-09)

ORIGINAL SCALE IN INCHES FOR REDUCED PLANS 0 1 2 3

CU BATA011
EA 4G2801/4G2901

DISREGARD PRINTS BEARING EARLIER REVISION DATES

REVISION DATES (PRELIMINARY STAGE ONLY)

SHEET 16 OF 64

C:\Documents and Settings\reyesl\My Documents\SFOBB-Canopy-Arch_reyesl.rvt

6/26/2012 2:16:39 PM

DIST.	COUNTY	ROUTE	POST MILES TOTAL PROJECT	SHEET NO.	TOTAL SHEETS
04	Ala	80	2.0/2.3	36	83

REGISTERED ARCHITECT — DATE 06/26/2012

PLANS APPROVAL DATE

STATE OF CALIFORNIA — SCOTT L. DANIELSON — 6/30/2013 — CERTIFICATE NO. C 61248 — REGISTERED ARCHITECT

The State of California or its officers or agents shall not be responsible for the accuracy or completeness of electronic copies of this plan sheet.

Parsons Brinckerhoff Inc.
303 Second Street, Suite 700N
San Francisco, CA 94107

Bay Area Toll Authority
101 Eight Street
Oakland, CA 94607

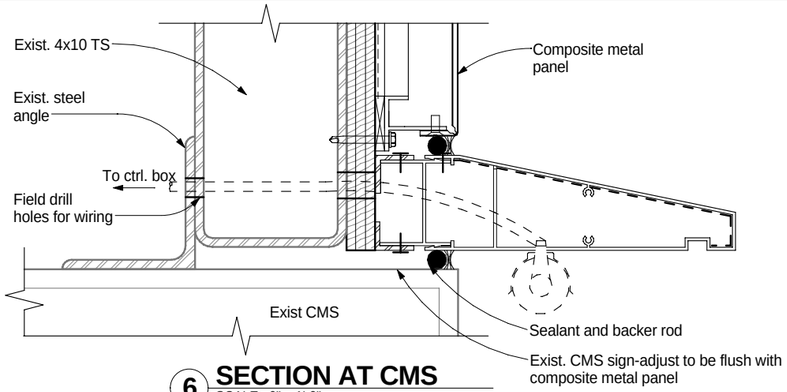

6 SECTION AT CMS
SCALE: 6" = 1'-0"

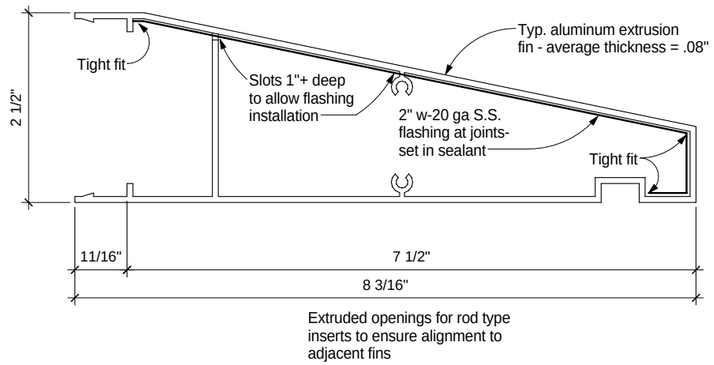

5 SECTION - TYP. HORIZ FIN
SCALE: 12" = 1'-0"

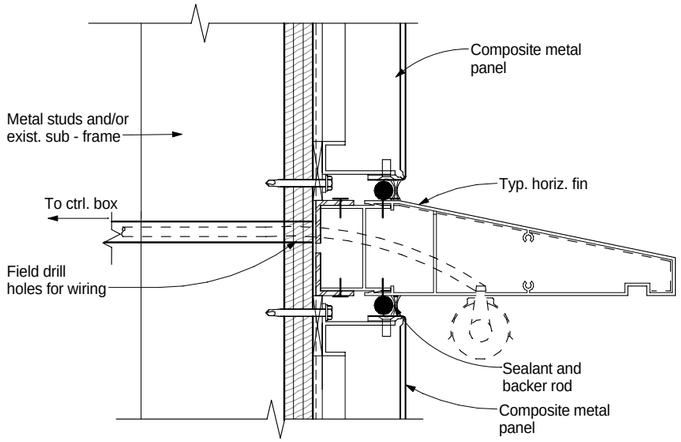

4 SECTION AT HORIZ FIN
SCALE: 6" = 1'-0"

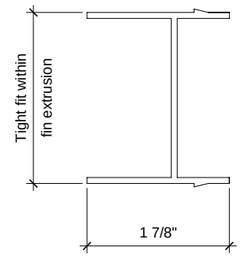

7 SECTION - BASE AT HORIZ. FIN
SCALE: 12" = 1'-0"

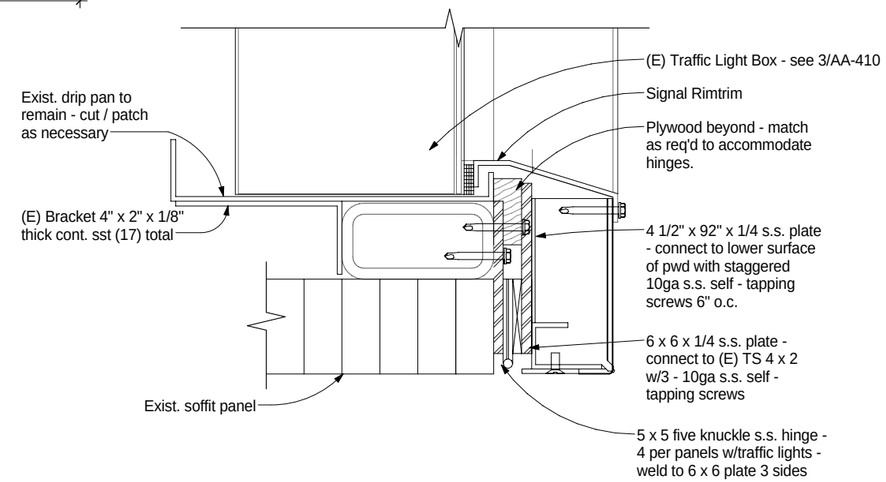

3 SECTION - PANEL AT TRAFFIC LIGHTS
SCALE: 6" = 1'-0"

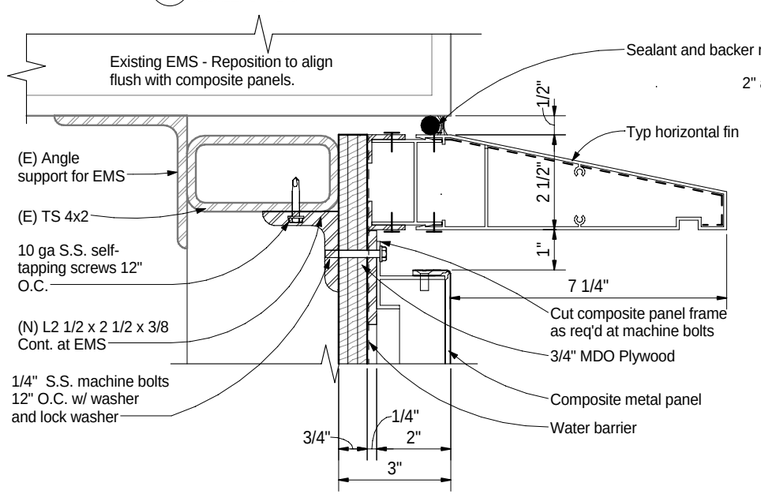

1 SECTION AT EMS
SCALE: 6" = 1'-0"

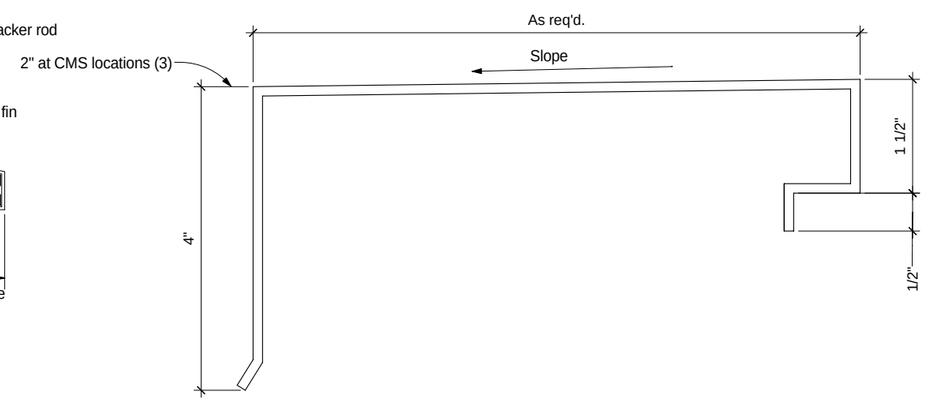

8 TYP. PARAPET CAP
SCALE: 12" = 1'-0"

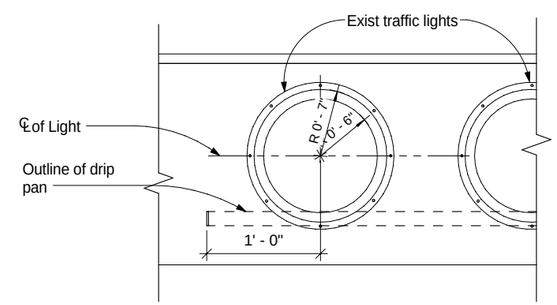

2 TRAFFIC INDICATOR LIGHT PANEL ELEVATION
SCALE: 1 1/2" = 1'-0"

AA-406

DESIGN	BY R. Howell	CHECKED S. Danielson	
DETAILS	BY L. Reyes	CHECKED R. Howell	
QUANTITIES	BY	CHECKED	

PREPARED FOR THE STATE OF CALIFORNIA DEPARTMENT OF TRANSPORTATION

PROJECT ENGINEER

BRIDGE NO. ____

POST MILE ____

SFOBB TOLL PLAZA CANOPY RENOVATIONS
WALL DETAILS

DESIGN GENERAL PLAN SHEET (ENGLISH) (REV. 06-01-09)

ORIGINAL SCALE IN INCHES FOR REDUCED PLANS 0 1 2 3

CU BATA011
EA 4G2801/4G2901

DISREGARD PRINTS BEARING EARLIER REVISION DATES

REVISION DATES (PRELIMINARY STAGE ONLY)

SHEET 17 OF 64

C:\Documents and Settings\reyesl\My Documents\SFOBB-Canopy-Arch_reyesl.rvt

6/26/2012 2:16:41 PM

DIST	COUNTY	ROUTE	POST MILES TOTAL PROJECT	SHEET No	TOTAL SHEETS
04	Ala	80	2.0/2.3	37	83

REGISTERED ARCHITECT — DATE 06/26/2012

PLANS APPROVAL DATE

STATE OF CALIFORNIA — SCOTT L. DANIELSON 06/30/2013 — CERTIFICATE NO. C 6188 — REGISTERED ARCHITECT

The State of California or its officers or agents shall not be responsible for the accuracy or completeness of electronic copies of this plan sheet.

Parsons Brinckerhoff
303 Second Street
Suite 700 North
San Francisco, CA 94107-1317

BAY AREA TOLL AUTHORITY
101 EIGHT STREET
OAKLAND, CA 94607

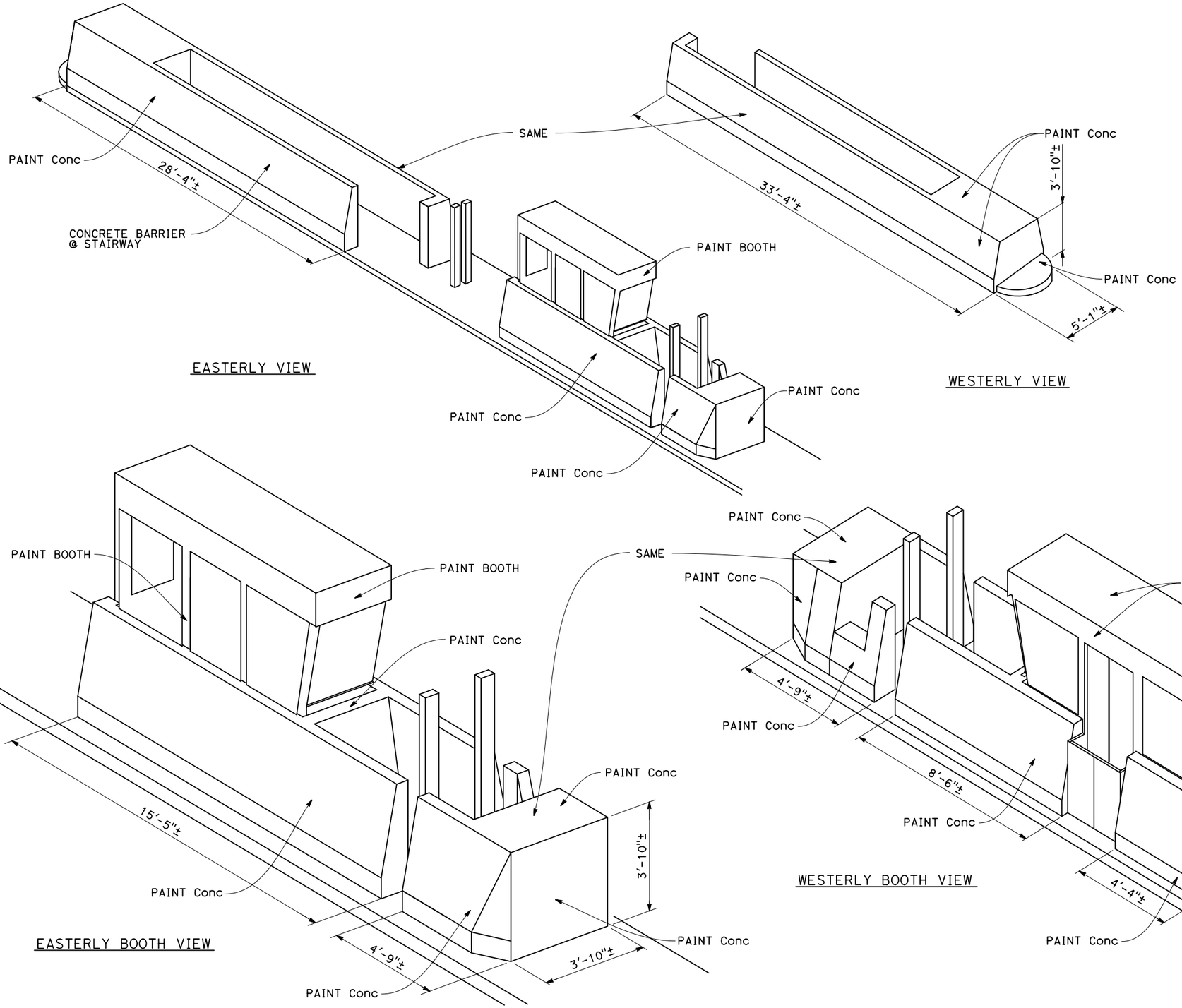

NOTE:

1. THE INTENT OF THIS DRAWING IS TO CONVEY THAT ALL EXPOSED CONCRETE AND METAL SURFACES OF THE TOLL BOOTH, STAIRS AND CONCRETE CONSTRUCTION WAST OF THE TOLL BOOTH SHOULD BE PAINTED.

LEGEND:

BOOTH NUMBER

AA-407

DESIGN	BY R.Howewell	CHECKED S. Danielson	PREPARED FOR THE STATE OF CALIFORNIA DEPARTMENT OF TRANSPORTATION
DETAILS	BY C. Sundthudkarn	CHECKED R. Howell	PROJECT ENGINEER
QUANTITIES	BY	CHECKED	

BRIDGE NO.

POST MILE

SFOBB TOLL PLAZA CANOPY RENOVATIONS

PAINTING DETAILS

DESIGN DETAIL SHEET (ENGLISH) (REV. 2/25/05)

ORIGINAL SCALE IN INCHES FOR REDUCED PLANS 0 1 2 3

CU BATA011
EA 4G2801/4G2901

DISREGARD PRINTS BEARING EARLIER REVISION DATES

REVISION DATES (PRELIMINARY STAGE ONLY)

SHEET 18 OF 64

FILE => AA-407.dgn

USERNAME => reyesl DATE PLOTTED => 26-JUN-2012 TIME PLOTTED => 13:27

DIST	COUNTY	ROUTE	POST MILES TOTAL PROJECT	SHEET No	TOTAL SHEETS
04	Ala	80	2.0/2.3	38	83

REGISTERED ARCHITECT — DATE 06/26/2012

STATE OF CALIFORNIA — SCOTT L. DANIELSON 06/30/2013 — CERTIFICATE NO. C 6180 — REGISTERED ARCHITECT

PLANS APPROVAL DATE

The State of California or its officers or agents shall not be responsible for the accuracy or completeness of electronic copies of this plan sheet.

Parsons Brinckerhoff
303 Second Street
Suite 700 North
San Francisco, CA 94107-1317

BAY AREA TOLL AUTHORITY
101 EIGHT STREET
OAKLAND, CA 94607

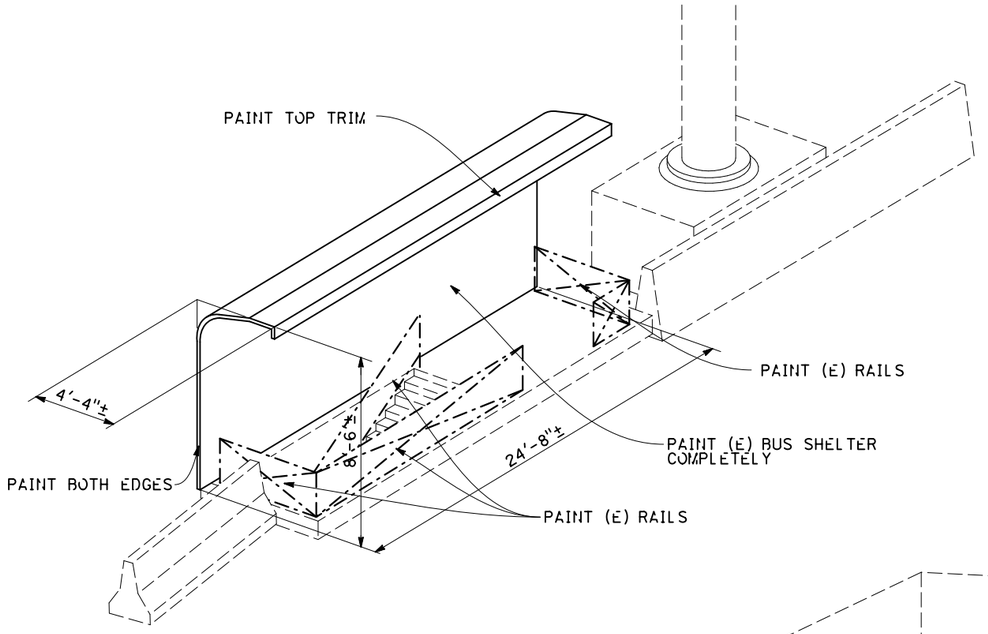

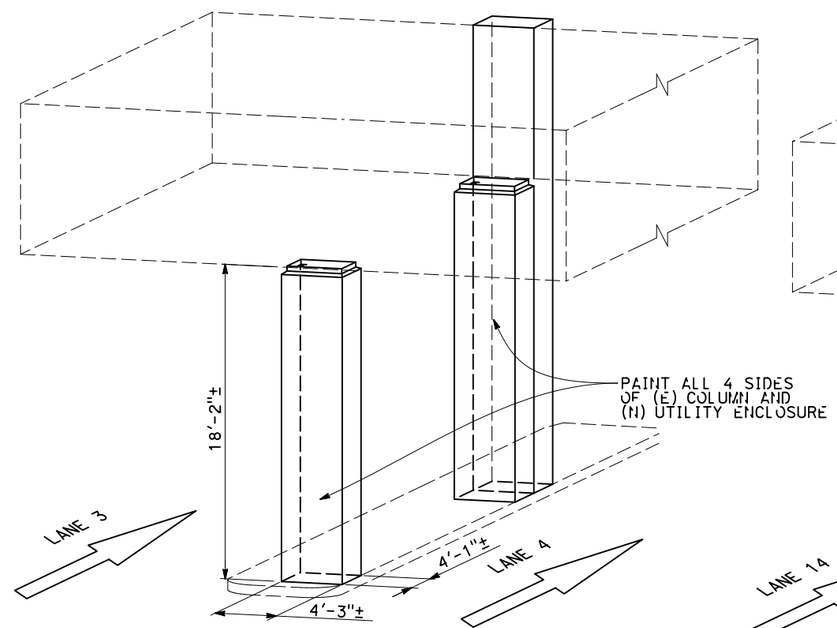

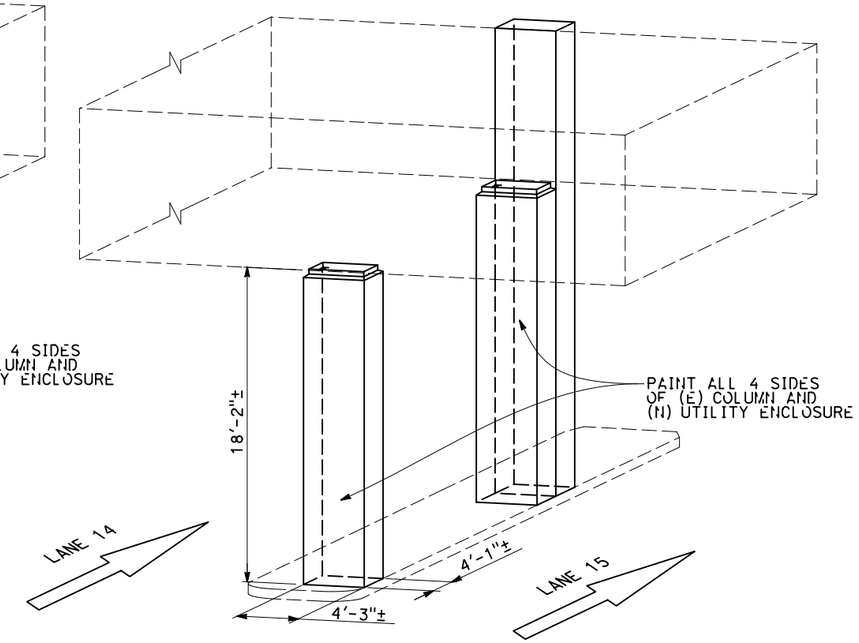

AA-408

DESIGN	BY R. Howell	CHECKED S. Danielson	
DETAILS	BY C. Sundthudkarn	CHECKED R. Howell	
QUANTITIES	BY	CHECKED	

PREPARED FOR THE STATE OF CALIFORNIA DEPARTMENT OF TRANSPORTATION

PROJECT ENGINEER

BRIDGE NO.

POST MILE

SFOBB TOLL PLAZA CANOPY RENOVATIONS
PAINTING DETAILS

DESIGN DETAIL SHEET (ENGLISH) (REV. 2/25/05)

ORIGINAL SCALE IN INCHES FOR REDUCED PLANS 0 1 2 3

CU BATA011
EA 4G2801/4G2901

DISREGARD PRINTS BEARING EARLIER REVISION DATES

REVISION DATES (PRELIMINARY STAGE ONLY)

SHEET 19 OF 64

FILE => AA-408.dgn

USERNAME => reyesl DATE PLOTTED => 26-JUN-2012 TIME PLOTTED => 13:29

DIST.	COUNTY	ROUTE	POST MILES TOTAL PROJECT	SHEET NO.	TOTAL SHEETS
04	Ala	80	2.0/2.3	39	83

REGISTERED ARCHITECT — DATE 06/26/2012

PLANS APPROVAL DATE

STATE OF CALIFORNIA — SCOTT L. DANIELSON — 6/30/2013 — CERTIFICATE NO. C 61248 — REGISTERED ARCHITECT

The State of California or its officers or agents shall not be responsible for the accuracy or completeness of electronic copies of this plan sheet.

Parsons Brinckerhoff Inc.
303 Second Street, Suite 700N
San Francisco, CA 94107

Bay Area Toll Authority
101 Eight Street
Oakland, CA 94607

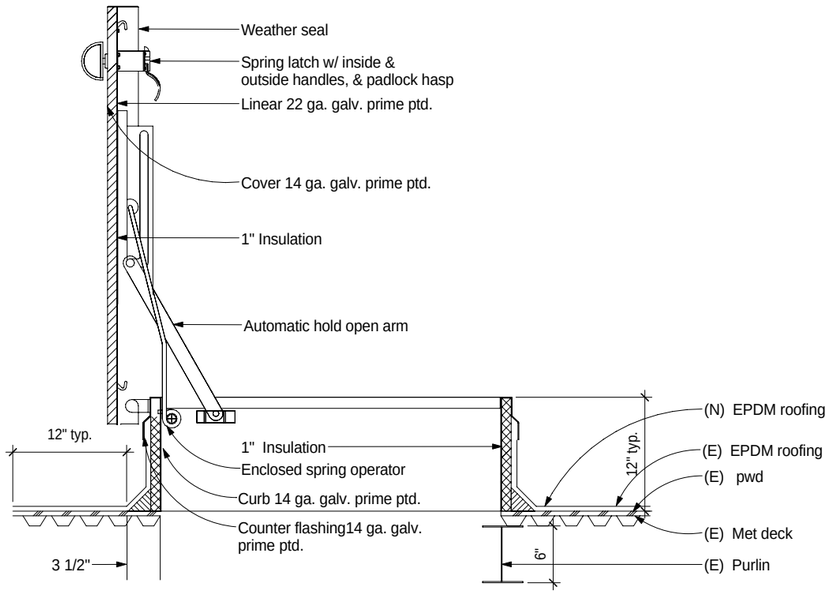

1 DETAIL - ROOF HATCH
SCALE: 1 1/2" = 1'-0"

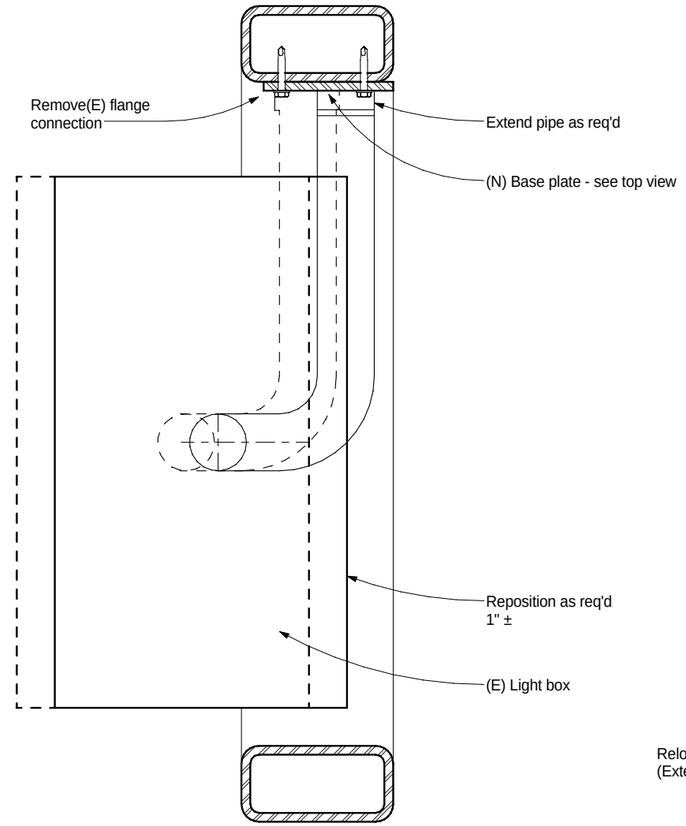

SIDE ELEVATION

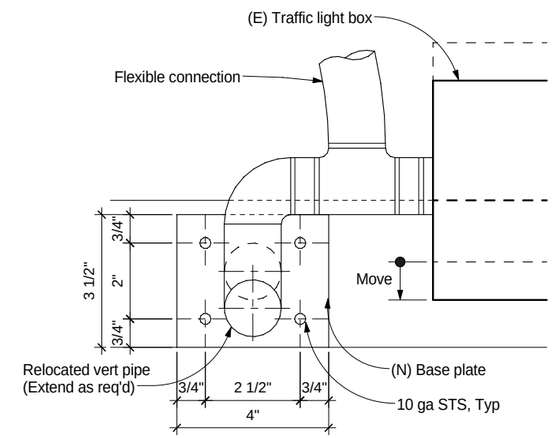

TOP VIEW

3 TRAFFIC LIGHT BOX MOUNTING DETAILS
SCALE: 6" = 1'-0"

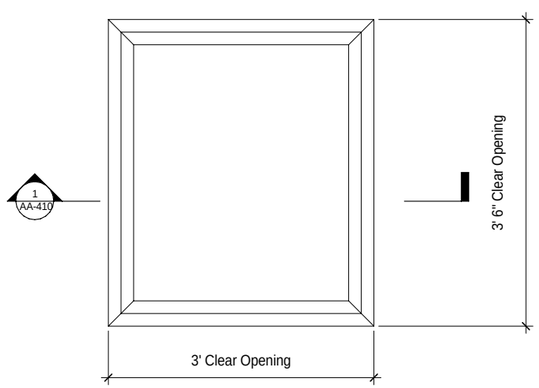

2 PLAN - ROOF HATCH
SCALE: 1" = 1'-0"

AA-410

DESIGN	BY R. Howell	CHECKED S. Danielson	
DETAILS	BY Z. Sadat	CHECKED R. Howell	
QUANTITIES	BY	CHECKED	

PREPARED FOR THE STATE OF CALIFORNIA DEPARTMENT OF TRANSPORTATION

PROJECT ENGINEER

BRIDGE NO.

POST MILE

SFOBB TOLL PLAZA CANOPY RENOVATIONS
MISCELLANEOUS DETAILS

DESIGN GENERAL PLAN SHEET (ENGLISH) (REV. 06-01-09)

ORIGINAL SCALE IN INCHES FOR REDUCED PLANS 0 1 2 3

CU BATA011
EA 4G2801/4G2901

DISREGARD PRINTS BEARING EARLIER REVISION DATES

REVISION DATES (PRELIMINARY STAGE ONLY)

SHEET 20 OF 64

C:\Documents and Settings\reyesl\My Documents\SFOBB-Canopy-Arch_reyesl.rvt

6/26/2012 2:16:42 PM

DIST.	COUNTY	ROUTE	POST MILES TOTAL PROJECT	SHEET NO.	TOTAL SHEETS
04	Ala	80	2.0/2.3	40	83

REGISTERED ARCHITECT — DATE 06/26/2012

PLANS APPROVAL DATE

STATE OF CALIFORNIA — SCOTT L. DANIELSON — 6/30/2013 — CERTIFICATE NO. C 61248 — REGISTERED ARCHITECT

The State of California or its officers or agents shall not be responsible for the accuracy or completeness of electronic copies of this plan sheet.

Parsons Brinckerhoff Inc.
303 Second Street, Suite 700N
San Francisco, CA 94107

Bay Area Toll Authority
101 Eight Street
Oakland, CA 94607

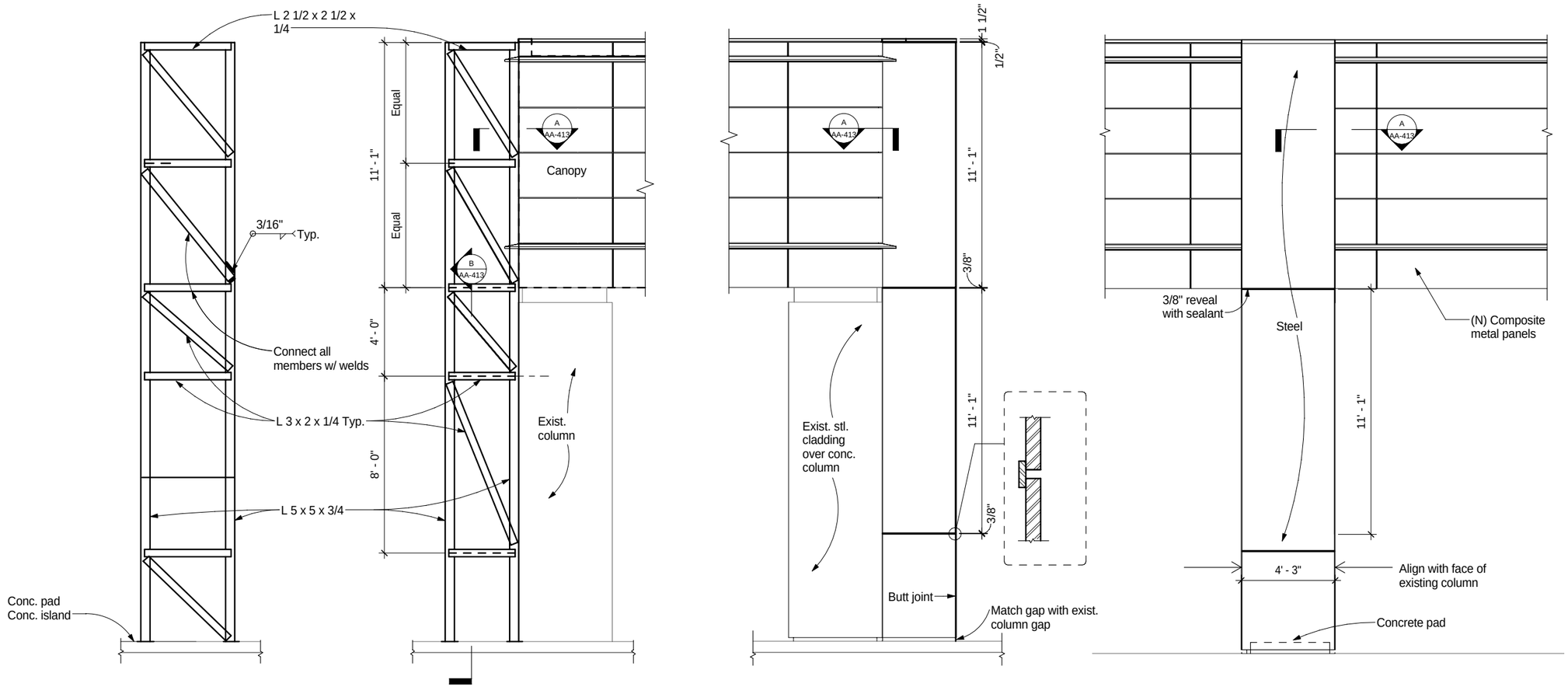

FRAMING UTILITY ENCLOSURE
SCALE: 3/8" = 1'-0"

NORTH ELEVATION (SOUTH ELEV. SIMILAR)
SCALE: 3/8" = 1'-0"

WEST ELEVATION OF UTILITY ENCLOSURE
SCALE: 3/8" = 1'-0"

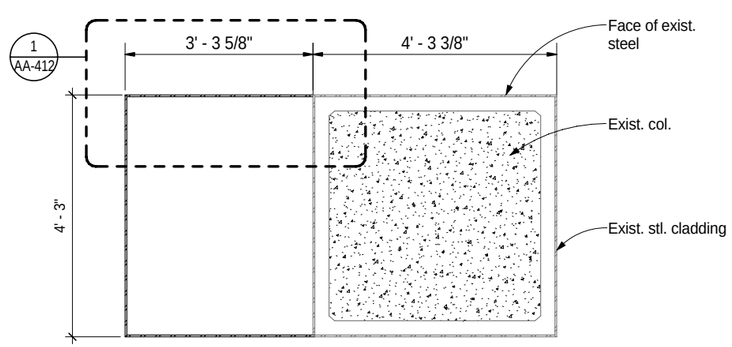

PLAN
SCALE: 3/4" = 1'-0"

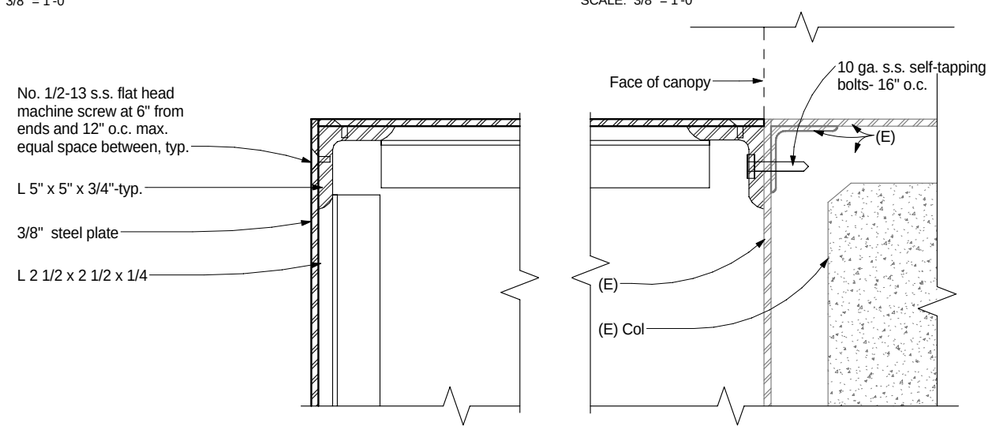

1 PLAN DETAIL
SCALE: 3" = 1'-0"

AA-412

DESIGN	BY R. Howell	CHECKED S. Danielson	
DETAILS	BY Z. Sadat	CHECKED R. Howell	
QUANTITIES	BY	CHECKED	

PREPARED FOR THE STATE OF CALIFORNIA DEPARTMENT OF TRANSPORTATION

PROJECT ENGINEER

BRIDGE NO.

POST MILE

SFOBB TOLL PLAZA CANOPY RENOVATIONS
UTILITY ENCLOSURE

DESIGN GENERAL PLAN SHEET (ENGLISH) (REV. 06-01-09)

ORIGINAL SCALE IN INCHES FOR REDUCED PLANS 0 1 2 3

CU BATA011
EA 4G2801/4G2901

DISREGARD PRINTS BEARING EARLIER REVISION DATES

REVISION DATES (PRELIMINARY STAGE ONLY)

SHEET 21 OF 64

C:\Documents and Settings\reyesl\My Documents\SFOBB-Canopy-Arch_reyesl.rvt

6/26/2012 2:16:44 PM

DIST.	COUNTY	ROUTE	POST MILES TOTAL PROJECT	SHEET NO.	TOTAL SHEETS
04	Ala	80	2.0/2.3	41	83

REGISTERED ARCHITECT — DATE 06/26/2012

PLANS APPROVAL DATE

STATE OF CALIFORNIA — SCOTT L. DANIELSON — 6/30/2013 — CERTIFICATE NO. C 61AB — REGISTERED ARCHITECT

The State of California or its officers or agents shall not be responsible for the accuracy or completeness of electronic copies of this plan sheet.

Parsons Brinckerhoff Inc.
303 Second Street, Suite 700N
San Francisco, CA 94107

Bay Area Toll Authority
101 Eight Street
Oakland, CA 94607

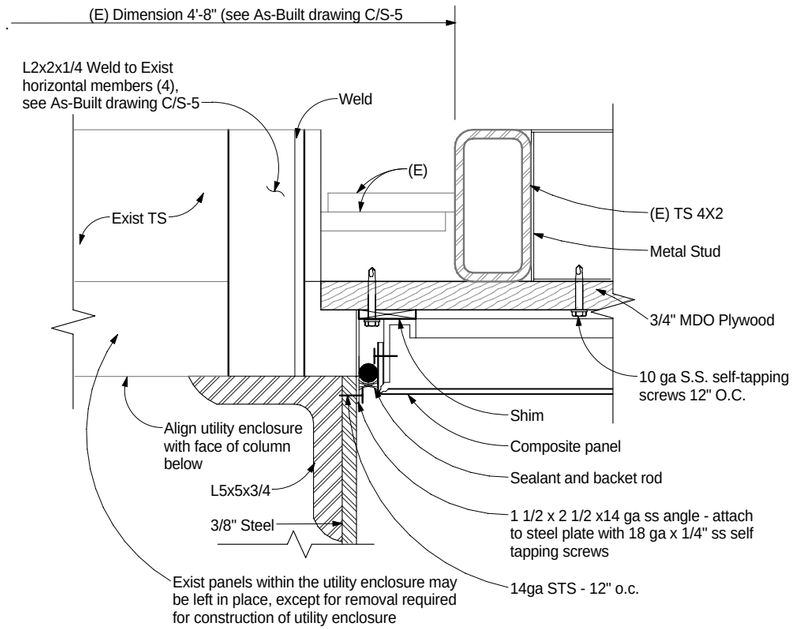

A PLAN - UTILITY ENCLOSURE AT CLADDING
SCALE: 6" = 1'-0"

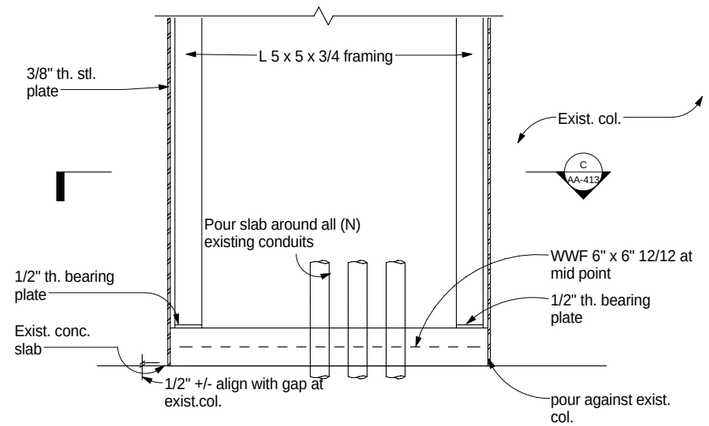

B SECTION
SCALE: 1" = 1'-0"

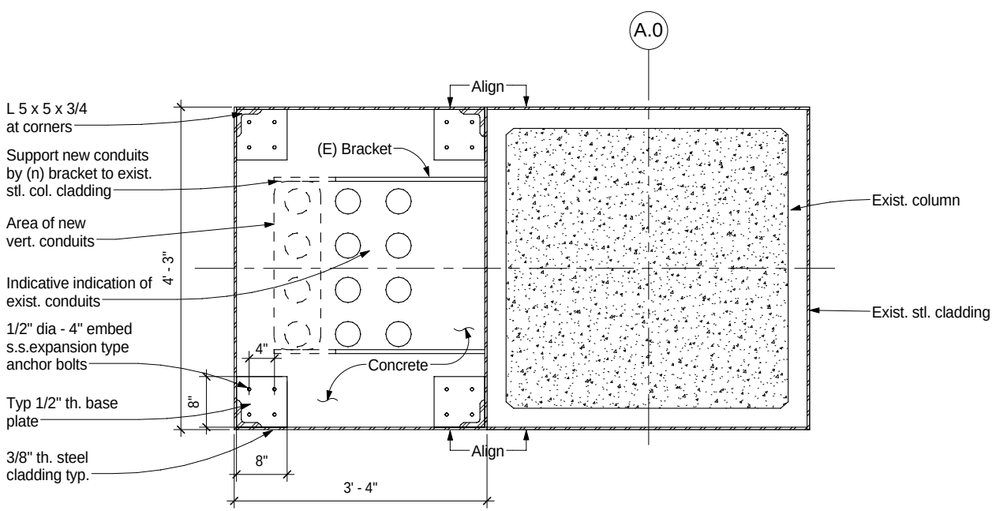

C PLAN AT UTILITY ENCLOSURE
SCALE: 1" = 1'-0"

AA-413

DESIGN	BY R. Howell	CHECKED S. Danielson	
DETAILS	BY Z. Sadat	CHECKED R. Howell	
QUANTITIES	BY	CHECKED	

PREPARED FOR THE STATE OF CALIFORNIA DEPARTMENT OF TRANSPORTATION

PROJECT ENGINEER

BRIDGE NO.

POST MILE

SFOBB TOLL PLAZA CANOPY RENOVATIONS
UTILITY ENCLOSURE

DESIGN GENERAL PLAN SHEET (ENGLISH) (REV. 06-01-09)

ORIGINAL SCALE IN INCHES FOR REDUCED PLANS 0 1 2 3

CU BATA011
EA 4G2801/4G2901

DISREGARD PRINTS BEARING EARLIER REVISION DATES

REVISION DATES (PRELIMINARY STAGE ONLY)

SHEET 22 OF 64

C:\Documents and Settings\reyesl\My Documents\SFOBB-Canopy-Arch_reyesl.rvt

6/26/2012 2:16:45 PM

DIST.	COUNTY	ROUTE	POST MILES TOTAL PROJECT	SHEET NO.	TOTAL SHEETS
04	Ala	80	2.0/2.3	42	83

REGISTERED ARCHITECT — DATE 06/26/2012

PLANS APPROVAL DATE

STATE OF CALIFORNIA — SCOTT L. DANIELSON — 6/30/2013 — CERTIFICATE NO. C 61A8 — REGISTERED ARCHITECT

The State of California or its officers or agents shall not be responsible for the accuracy or completeness of electronic copies of this plan sheet.

Parsons Brinckerhoff Inc.
303 Second Street, Suite 700N
San Francisco, CA 94107

Bay Area Toll Authority
101 Eight Street
Oakland, CA 94607

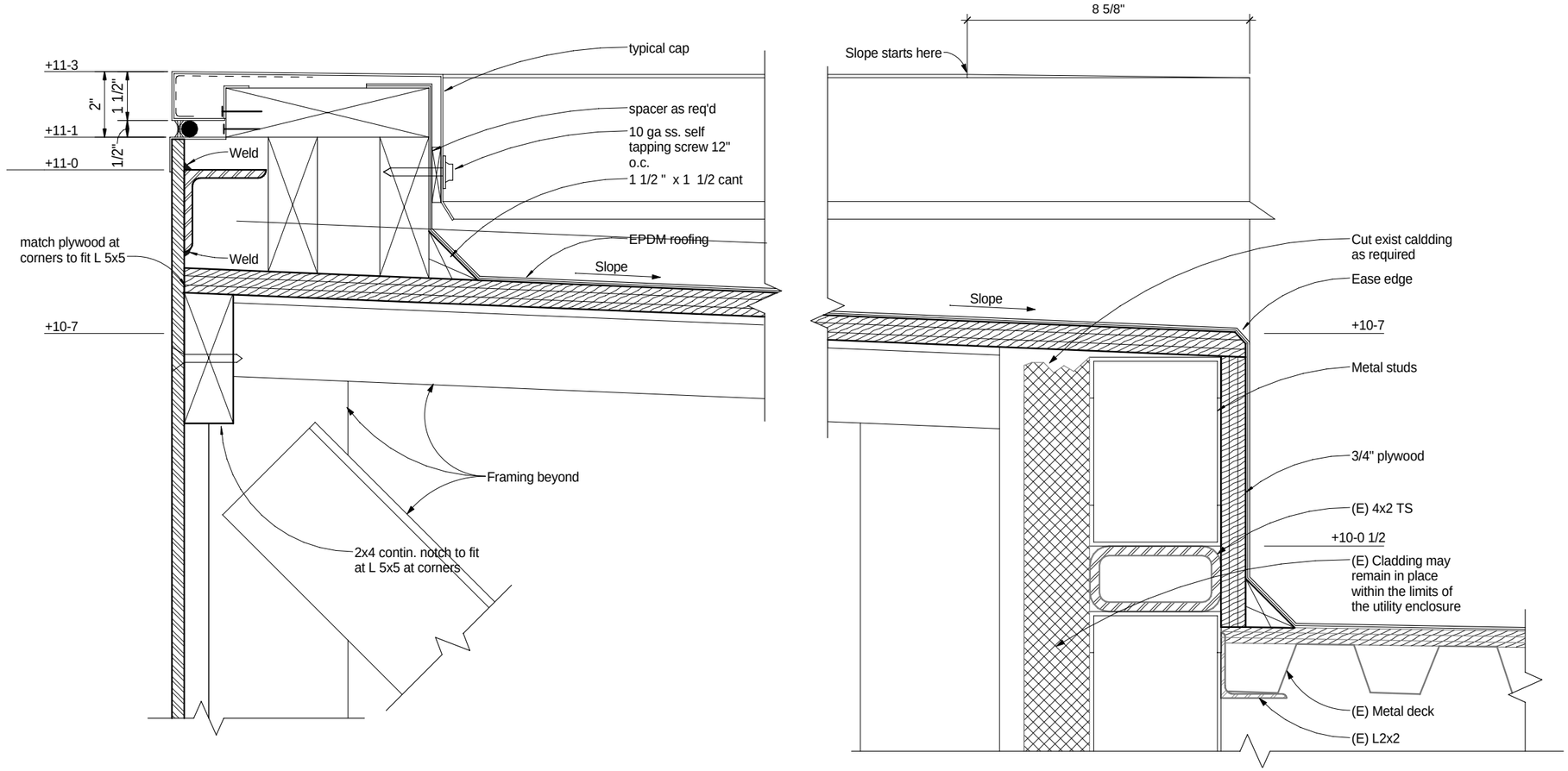

SECTION AT UTILITY ENCLOSURE

SCALE: 6" = 1'-0"

AA-414

DESIGN	BY R. Howell	CHECKED S. Danielson	
DETAILS	BY Z. Sadat	CHECKED R. Howell	
QUANTITIES	BY	CHECKED	

PREPARED FOR THE STATE OF CALIFORNIA DEPARTMENT OF TRANSPORTATION

PROJECT ENGINEER

BRIDGE NO.

POST MILE

SFOBB TOLL PLAZA CANOPY RENOVATIONS

WALL SECTION DETAIL @ UTILITY ENCLOSURE

DESIGN GENERAL PLAN SHEET (ENGLISH) (REV. 06-01-09)

ORIGINAL SCALE IN INCHES FOR REDUCED PLANS 0 1 2 3

CU BATA011
EA 4G2801/4G2901

DISREGARD PRINTS BEARING EARLIER REVISION DATES

REVISION DATES (PRELIMINARY STAGE ONLY) -

SHEET 23 OF 64

C:\Documents and Settings\reyesl\My Documents\SFOBB-Canopy-Arch_reyesl.rvt

6/26/2012 2:18:45 PM

DIST.	COUNTY	ROUTE	POST MILES TOTAL PROJECT	SHEET NO.	TOTAL SHEETS
04	Ala	80	2.0/2.3	43	83

REGISTERED ARCHITECT — DATE 06/26/2012

STATE OF CALIFORNIA — SCOTT L. DANIELSON — 6/30/2013 — CERTIFICATE NO. C 61248 — REGISTERED ARCHITECT

PLANS APPROVAL DATE

The State of California or its officers or agents shall not be responsible for the accuracy or completeness of electronic copies of this plan sheet.

Parsons Brinckerhoff Inc.
303 Second Street, Suite 700N
San Francisco, CA 94107

Bay Area Toll Authority
101 Eight Street
Oakland, CA 94607

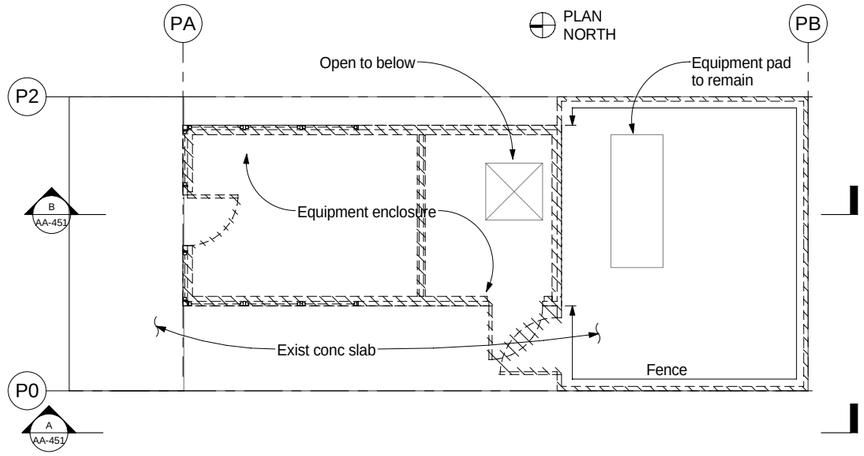

PLAN
SCALE: 1/4" = 1'-0"

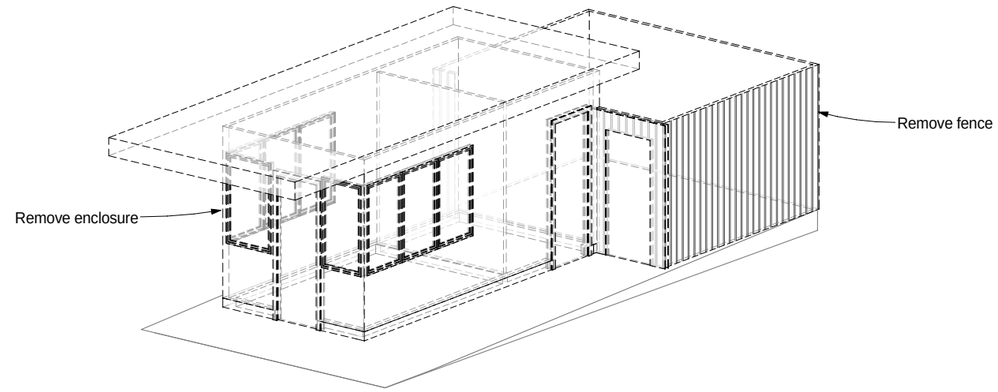

ISOMETRIC VIEW
SCALE:

LEGEND:

Existing to be removed

Existing to Remain

DEMOLITION NOTES:

1. Remove completely existing walls, curbs, doors, gates, roofs, fences, and other portions of the equipment enclosure to form a smooth surface of the existing concrete slab.
2. Existing concrete slab and pumps shall remain.
3. All existing electrical panels, j-boxes, conduit, switches, fixtures, and other parts of the electrical system shall remain.
4. Provide temporary support for all equipment in note 3. above.

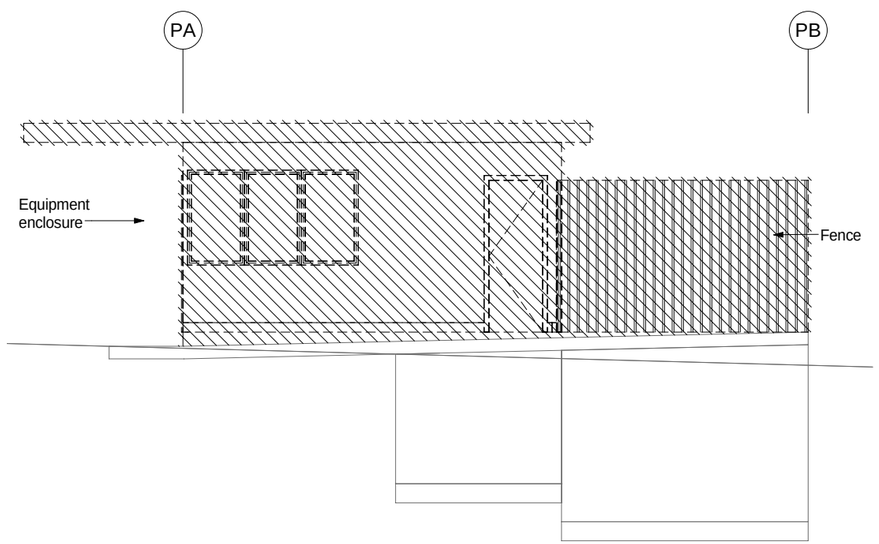

A WEST ELEVATION
SCALE: 1/4" = 1'-0"

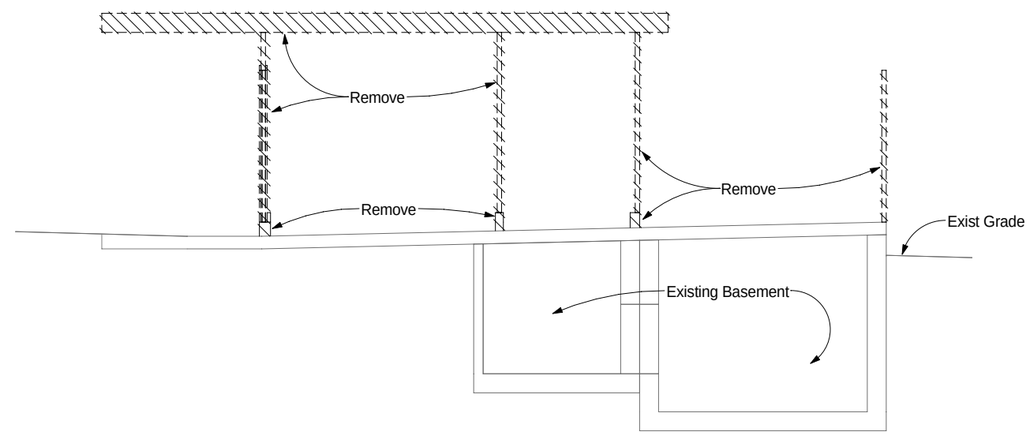

B SECTION
SCALE: 1/4" = 1'-0"

AA-451

DESIGN	BY B. Howell	CHECKED S. Danielson	
DETAILS	BY L. Reyes	CHECKED R. Howell	
QUANTITIES	BY	CHECKED	

PREPARED FOR THE STATE OF CALIFORNIA DEPARTMENT OF TRANSPORTATION

PROJECT ENGINEER

BRIDGE NO.

POST MILE

SFOBB TOLL PLAZA CANOPY RENOVATIONS
PUMP STATION - DEMOLITION

DESIGN GENERAL PLAN SHEET (ENGLISH) (REV. 06-01-09)

ORIGINAL SCALE IN INCHES FOR REDUCED PLANS 0 1 2 3

CU BATA011
EA 4G2801/4G2901

DISREGARD PRINTS BEARING EARLIER REVISION DATES

REVISION DATES (PRELIMINARY STAGE ONLY)

SHEET 24 OF 64

C:\Documents and Settings\reyesl\My Documents\SFOBB-Canopy-Arch_reyesl.rvt

6/26/2012 2:34:22 PM

DIST.	COUNTY	ROUTE	POST MILES TOTAL PROJECT	SHEET NO.	TOTAL SHEETS
04	Ala	80	2.0/2.3	44	83

REGISTERED ARCHITECT — DATE 06/26/2012

PLANS APPROVAL DATE

STATE OF CALIFORNIA — SCOTT L. DANIELSON — 6/30/2013 — CERTIFICATE NO. C 61248 — REGISTERED ARCHITECT

The State of California or its officers or agents shall not be responsible for the accuracy or completeness of electronic copies of this plan sheet.

Parsons Brinckerhoff Inc.
303 Second Street, Suite 700N
San Francisco, CA 94107

Bay Area Toll Authority
101 Eight Street
Oakland, CA 94607

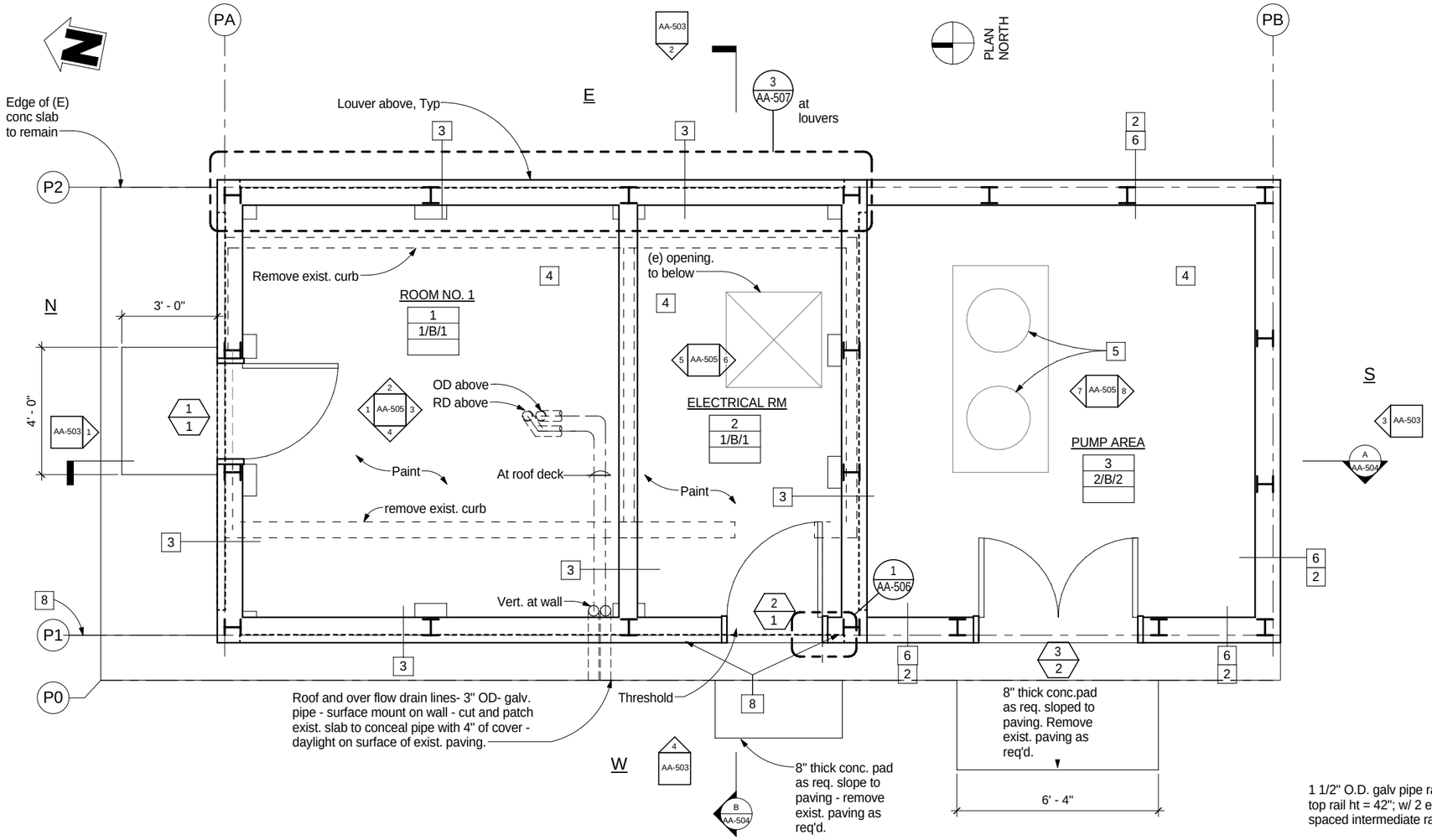

PUMP STATION FLOOR PLAN

SCALE: 1/2" = 1'-0"

SHEET NOTES:

1. Demolished pump housings. Patch concrete as required.
2. New curb
3. New walls
4. Existing concrete slab
5. Existing pump
6. New fence
7. Electrical panel
8. Pour joint
9. Roof drain
10. Overflow drawin
11. EPDM Roofing
12. Cricket

NOTE:

1. The demolition of the existing Pump Station will be done by another Contractor, who will leave the existing floor slab clean and clear. Certain electrical and mechanical equipment will be left with the slab area for incorporation into the new work.

DOOR SCHEDULE

1. PLAN INDICATION:
   - 1 — Door Mark
   - 2 — Hardware Group
2. DOOR NOTES:
   - A. Door Facing: Steel
   - B. Door Openings:
     - A. 3'-0" x varies
     - B. 5'-0" x varies
   - C. Door thickness: 1 3/4"
   - D. Door Finish: Painted
   - E. Door Type: Flush, Steel, Hollow Metal

ROOM FINISH SCHEDULE PLAN INIDICATIONS

Room No. 1
1
1/B/2

- Room number
- First No. - Floor/Base
  Second No. - Walls
  Third No. - Ceiling
- Ceiling Height varies depending on height of concrete curb

ROOM FINISH SCHEDULE

RM	FLOOR/BASE	WALLS	CEILING
1	Concrete, concrete base	Plywood, steel, doors, door frame	Steel deck
2	Concrete, conc base, flashing	Plywood, steel, doors, door frame	None

Apply paint finish to the above materials, as noted in the specifications.

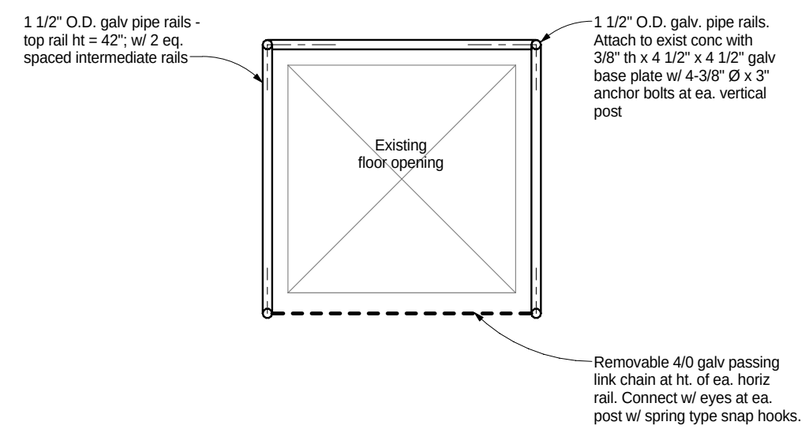

PLAN - RAIL AT FLOOR OPENING

SCALE: 1" = 1'-0"

AA-501

DESIGN	BY R. Howell	CHECKED S. Danielson	LOAD & RESISTANCE FACTOR DESIGN	LIVE LOADING: PERMIT DESIGN VEHICLE
DETAILS	BY L. Reyes	CHECKED R. Howell	LAYOUT BY	CHECKED
QUANTITIES	BY	CHECKED	SPECIFICATIONS BY	PLANS AND SPECS COMPARED

PREPARED FOR THE STATE OF CALIFORNIA DEPARTMENT OF TRANSPORTATION

PROJECT ENGINEER

BRIDGE NO.

POST MILE

SFOBB TOLL PLAZA CANOPY RENOVATIONS

PUMP STATION PLAN

DESIGN GENERAL PLAN SHEET (ENGLISH) (REV. 06-01-09)

ORIGINAL SCALE IN INCHES FOR REDUCED PLANS 0 1 2 3

CU BATA011
EA 4G2801/4G2901

DISREGARD PRINTS BEARING EARLIER REVISION DATES

REVISION DATES (PRELIMINARY STAGE ONLY)

SHEET 25 OF 64

C:\Documents and Settings\reyesl\My Documents\SFOBB-Canopy-Arch_reyesl.rvt

6/26/2012 2:16:48 PM

DIST.	COUNTY	ROUTE	POST MILES TOTAL PROJECT	SHEET NO.	TOTAL SHEETS
04	Ala	80	2.0/2.3	45	83

REGISTERED ARCHITECT — DATE 06/26/2012

PLANS APPROVAL DATE

STATE OF CALIFORNIA — SCOTT L. DANIELSON — 6/30/2013 — CERTIFICATE NO. C 61248 — REGISTERED ARCHITECT

The State of California or its officers or agents shall not be responsible for the accuracy or completeness of electronic copies of this plan sheet.

Parsons Brinckerhoff Inc.
303 Second Street, Suite 700N
San Francisco, CA 94107

Bay Area Toll Authority
101 Eight Street
Oakland, CA 94607

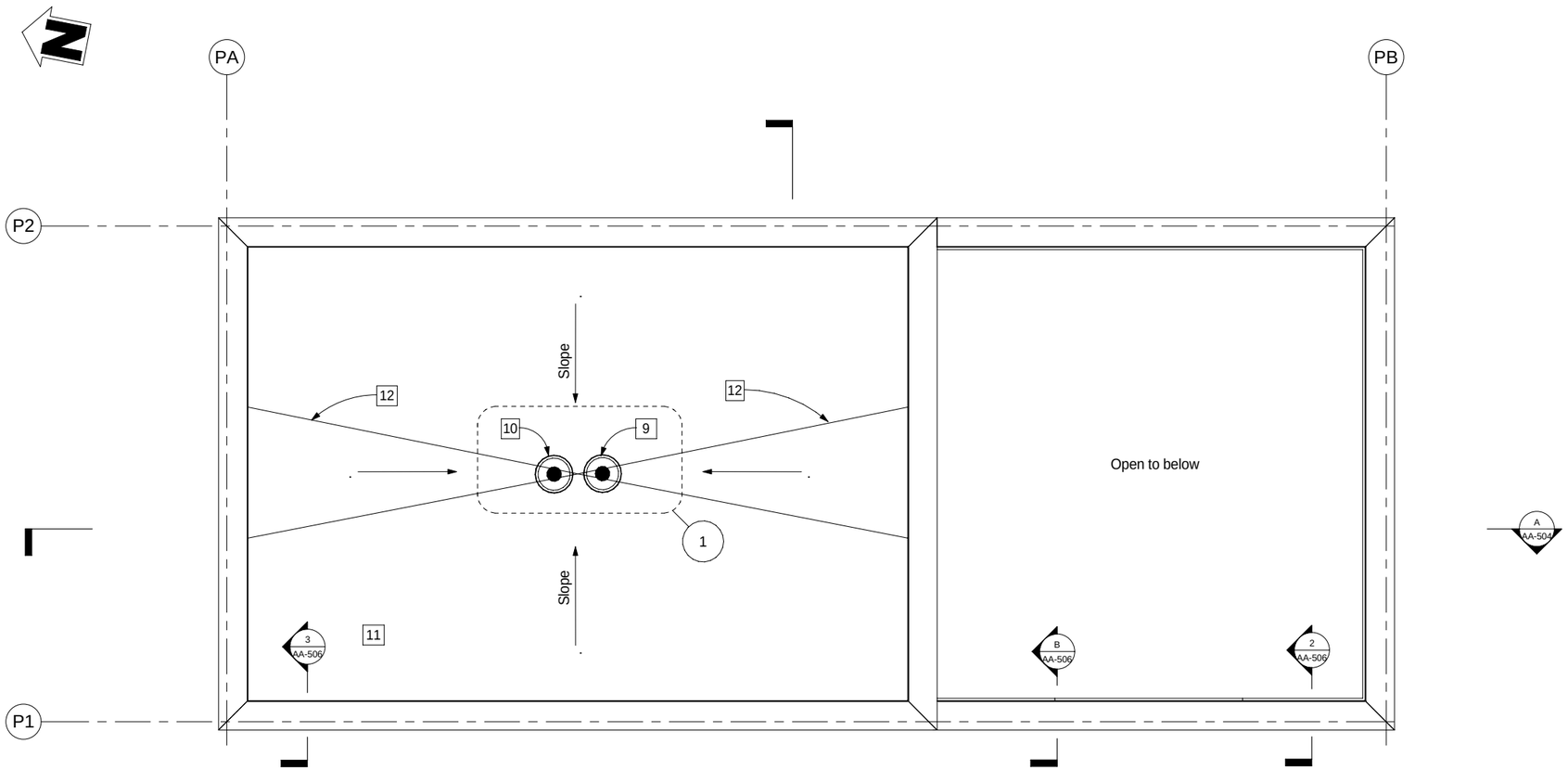

PUMP STATION ROOF PLAN

SCALE: 1/2" = 1'-0"

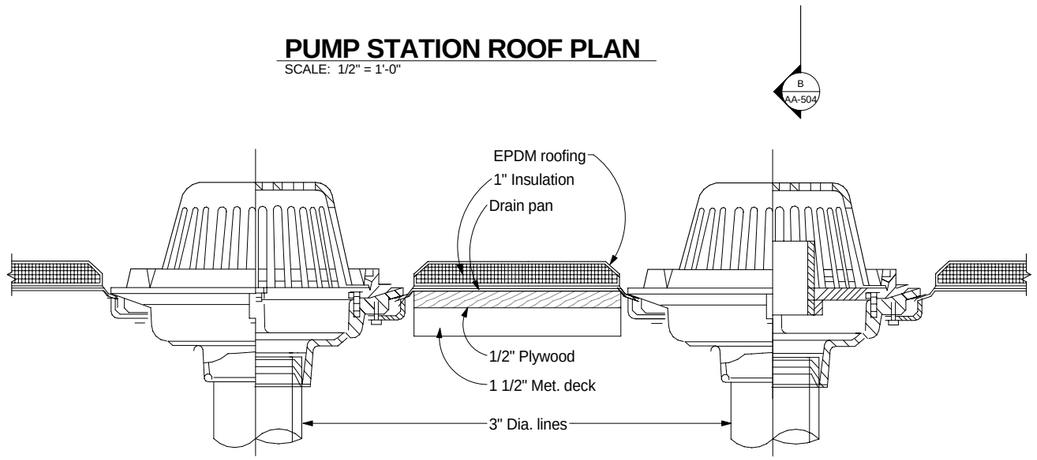

1 ROOF DRAIN AND OVERFLOW DRAIN

SCALE: 3" = 1'-0"

SHEET NOTES:

1. Demolished pump housings. Patch concrete as required.
2. New curb
3. New walls
4. Existing concrete slab
5. Existing pump
6. New fence
7. Electrical panel
8. Pour joint
9. Roof drain
10. Overflow drawin
11. EPDM Roofing
12. Cricket (shape) insulation to achieve proper slope.

AA-502

DESIGN	BY R. Howell	CHECKED S. Danielson	LOAD & RESISTANCE FACTOR DESIGN	LIVE LOADING: PERMIT DESIGN VEHICLE
DETAILS	BY L. Reyes	CHECKED R. Howell	LAYOUT BY	CHECKED
QUANTITIES	BY	CHECKED	SPECIFICATIONS BY	PLANS AND SPECS COMPARED

PREPARED FOR THE STATE OF CALIFORNIA DEPARTMENT OF TRANSPORTATION

PROJECT ENGINEER

BRIDGE NO.

POST MILE

SFOBB TOLL PLAZA CANOPY RENOVATIONS

PUMP STATION ROOF PLAN

DESIGN GENERAL PLAN SHEET (ENGLISH) (REV. 06-01-09)

ORIGINAL SCALE IN INCHES FOR REDUCED PLANS 0 1 2 3

CU BATA011
EA 4G2801/4G2901

DISREGARD PRINTS BEARING EARLIER REVISION DATES

REVISION DATES (PRELIMINARY STAGE ONLY)

SHEET 26 OF 64

C:\Documents and Settings\reyesl\My Documents\SFOBB-Canopy-Arch_reyesl.rvt

6/26/2012 2:36:15 PM

DIST.	COUNTY	ROUTE	POST MILES TOTAL PROJECT	SHEET NO.	TOTAL SHEETS
04	Ala	80	2.0/2.3	46	83

REGISTERED ARCHITECT — DATE 06/26/2012

PLANS APPROVAL DATE

STATE OF CALIFORNIA — SCOTT L. DANIELSON — 6/30/2013 — CERTIFICATE NO. C 61248 — REGISTERED ARCHITECT

The State of California or its officers or agents shall not be responsible for the accuracy or completeness of electronic copies of this plan sheet.

Parsons Brinckerhoff Inc.
303 Second Street, Suite 700N
San Francisco, CA 94107

Bay Area Toll Authority
101 Eight Street
Oakland, CA 94607

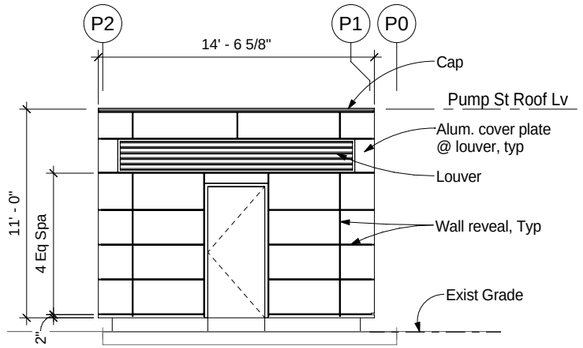

1 PUMP STATION NORTH ELEVATION
SCALE: 1/4" = 1'-0"

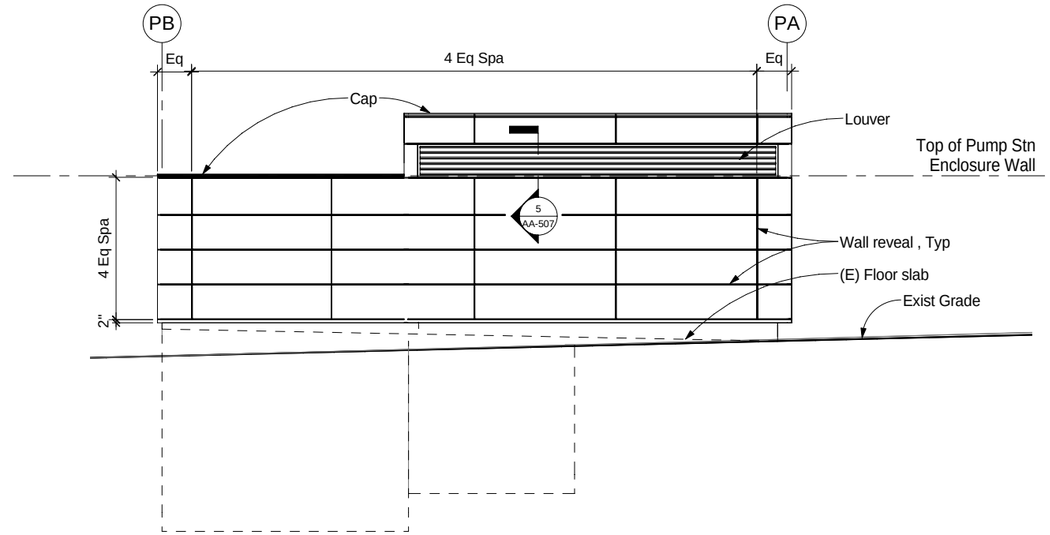

2 PUMP STATION EAST ELEVATION
SCALE: 1/4" = 1'-0"

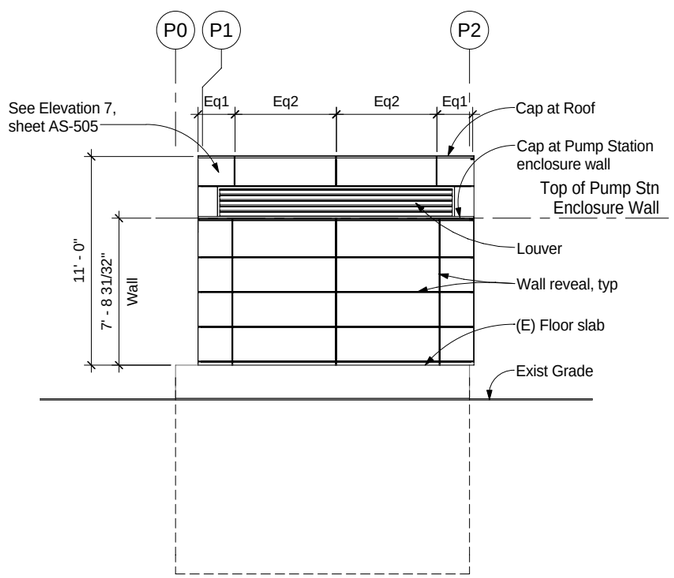

3 PUMP STATION SOUTH ELEVATION
SCALE: 1/4" = 1'-0"

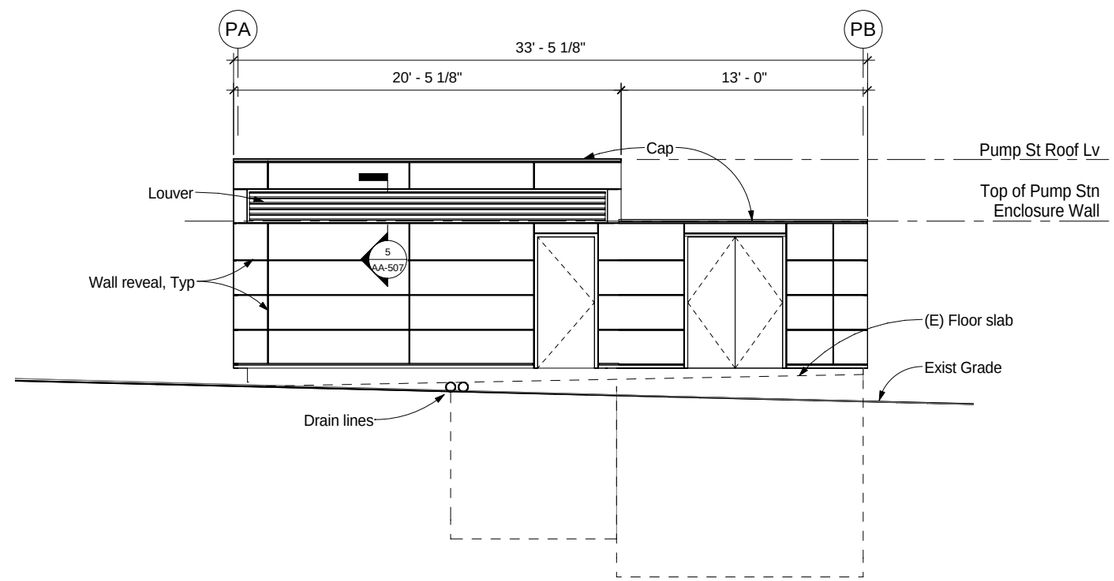

4 PUMP STATION WEST ELEVATION
SCALE: 1/4" = 1'-0"

AA-503

DESIGN	BY R. Howell	CHECKED S. Danielson	LOAD & RESISTANCE FACTOR DESIGN	LIVE LOADING: PERMIT DESIGN VEHICLE	
DETAILS	BY L. Reyes	CHECKED R. Howell	LAYOUT	BY	CHECKED
QUANTITIES	BY	CHECKED	SPECIFICATIONS	BY	PLANS AND SPECS COMPARED

PREPARED FOR THE STATE OF CALIFORNIA DEPARTMENT OF TRANSPORTATION

PROJECT ENGINEER

BRIDGE NO. _____

POST MILE _____

SFOBB TOLL PLAZA CANOPY RENOVATIONS
PUMP STATION ELEVATIONS

DESIGN GENERAL PLAN SHEET (ENGLISH) (REV. 06-01-09)

ORIGINAL SCALE IN INCHES FOR REDUCED PLANS 0 1 2 3

CU BATA011
EA 4G2801/4G2901

DISREGARD PRINTS BEARING EARLIER REVISION DATES

REVISION DATES (PRELIMINARY STAGE ONLY)

SHEET 27 OF 64

C:\Documents and Settings\reyesl\My Documents\SFOBB-Canopy-Arch_reyesl.rvt

6/26/2012 2:16:53 PM

DIST.	COUNTY	ROUTE	POST MILES TOTAL PROJECT	SHEET NO.	TOTAL SHEETS
04	Ala	80	2.0/2.3	47	83

REGISTERED ARCHITECT — DATE 06/26/2012

PLANS APPROVAL DATE

STATE OF CALIFORNIA — SCOTT L. DANIELSON — 6/30/2013 — CERTIFICATE NO. C 6148 — REGISTERED ARCHITECT

The State of California or its officers or agents shall not be responsible for the accuracy or completeness of electronic copies of this plan sheet.

Parsons Brinckerhoff Inc.
303 Second Street, Suite 700N
San Francisco, CA 94107

Bay Area Toll Authority
101 Eight Street
Oakland, CA 94607

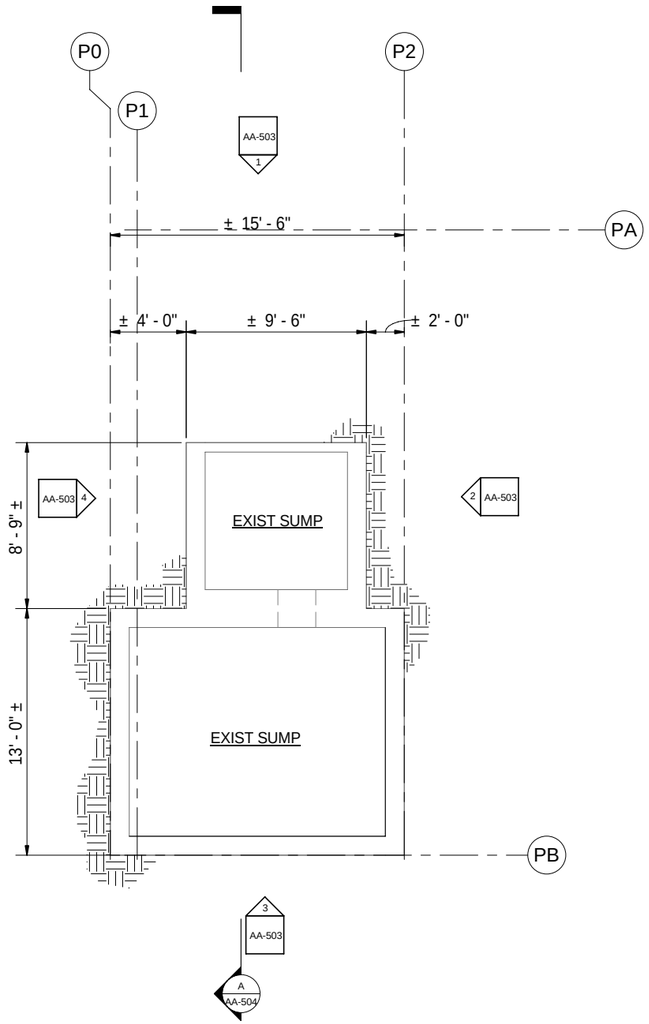

PUMP STATION BASEMENT PLAN

SCALE: 1/4" = 1'-0"

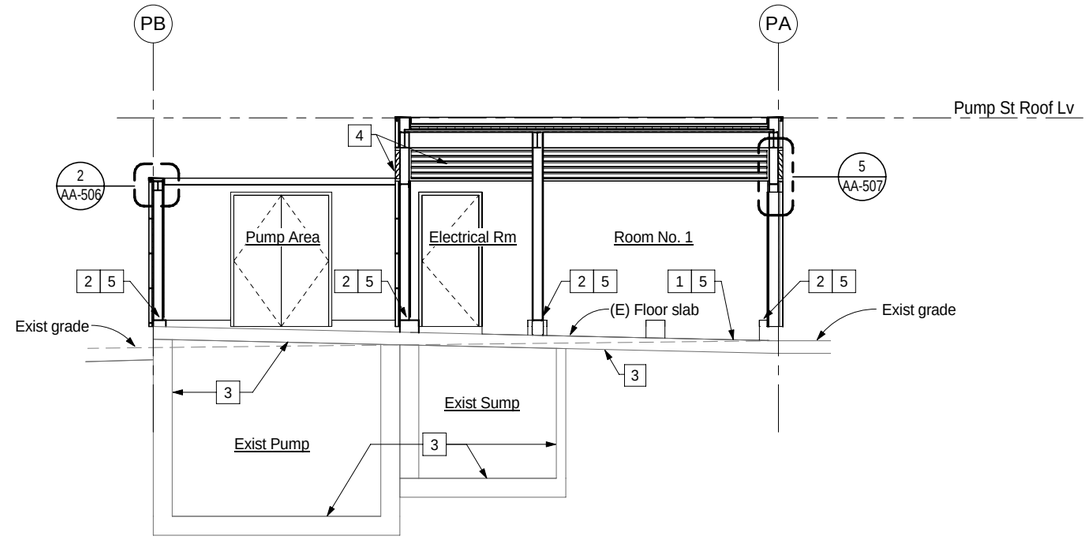

A PUMP STATION SECTION

SCALE: 1/4" = 1'-0"

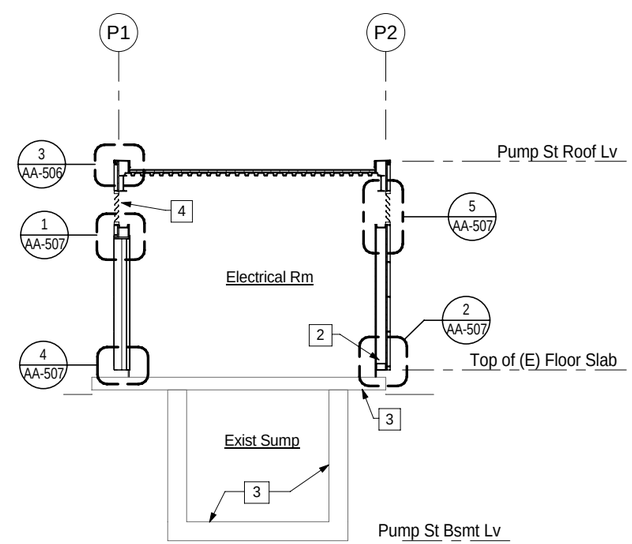

B SECTION AT ELECTRICAL RM

SCALE: 1/4" = 1'-0"

SHEET NOTES:

1. Existing concrete slab
2. New concrete curb
3. Existing concrete slab and foundation
4. New Louver
5. Tops of all new curbs shall be horizontal.

AA-504

DESIGN	BY R. Howell	CHECKED S. Danielson	
DETAILS	BY L. Reyes	CHECKED R. Howell	
QUANTITIES	BY	CHECKED	

PREPARED FOR THE STATE OF CALIFORNIA DEPARTMENT OF TRANSPORTATION

PROJECT ENGINEER

BRIDGE NO.

POST MILE

SFOBB TOLL PLAZA CANOPY RENOVATIONS

PUMP STATION SECTIONS & DETAILS

DESIGN GENERAL PLAN SHEET (ENGLISH) (REV. 06-01-09)

ORIGINAL SCALE IN INCHES FOR REDUCED PLANS 0 1 2 3

CU BATA011
EA 4G2801/4G2901

DISREGARD PRINTS BEARING EARLIER REVISION DATES

REVISION DATES (PRELIMINARY STAGE ONLY)

SHEET 28 OF 64

C:\Documents and Settings\reyesl\My Documents\SFOBB-Canopy-Arch_reyesl.rvt

6/26/2012 2:16:55 PM

DIST.	COUNTY	ROUTE	POST MILES TOTAL PROJECT	SHEET NO.	TOTAL SHEETS
04	Ala	80	2.0/2.3	48	83

REGISTERED ARCHITECT — DATE 06/26/2012

PLANS APPROVAL DATE

STATE OF CALIFORNIA — SCOTT L. DANIELSON — 6/30/2013 — CERTIFICATE NO. C 61248 — REGISTERED ARCHITECT

The State of California or its officers or agents shall not be responsible for the accuracy or completeness of electronic copies of this plan sheet.

Parsons Brinckerhoff Inc.
303 Second Street, Suite 700N
San Francisco, CA 94107

Bay Area Toll Authority
101 Eight Street
Oakland, CA 94607

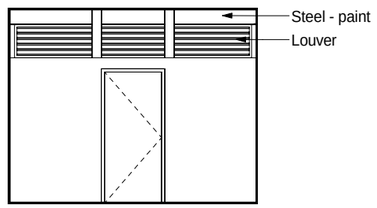

1 NORTH ELEVATION
SCALE: 1/4" = 1'-0"

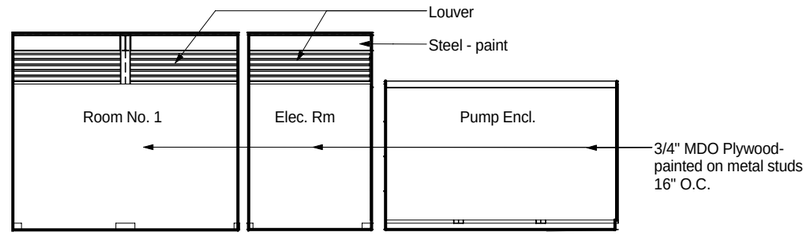

2 EAST ELEVATION
SCALE: 1/4" = 1'-0"

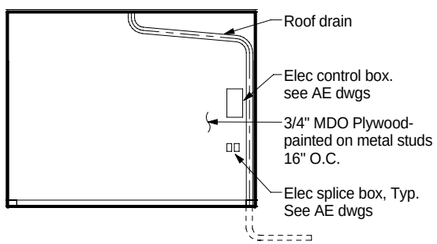

3 SOUTH ELEVATION
SCALE: 1/4" = 1'-0"

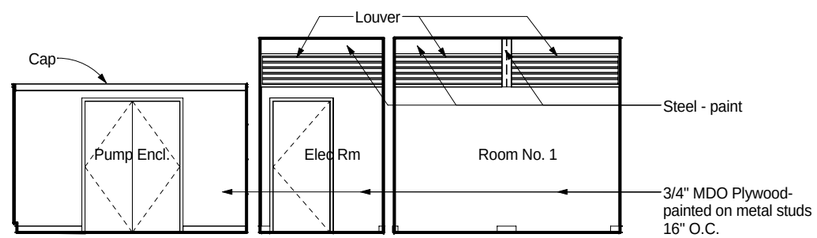

4 WEST ELEVATION
SCALE: 1/4" = 1'-0"

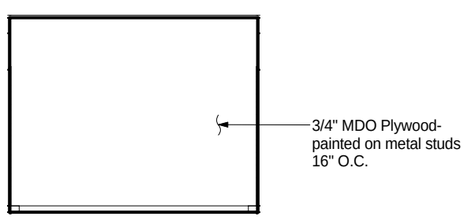

5 ELEC. RM. NORTH ELEVATION
SCALE: 1/4" = 1'-0"

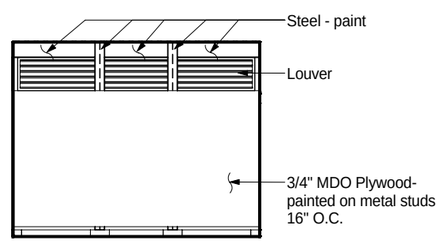

6 ELEC. RM SOUTH ELEVATION
SCALE: 1/4" = 1'-0"

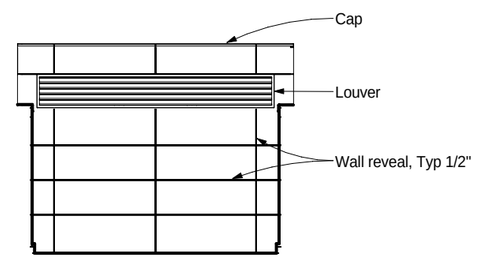

7 PUMP ENCL. NORTH ELEVATION
SCALE: 1/4" = 1'-0"

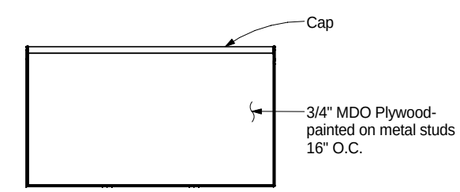

8 PUMP ENCL. SOUTH ELEVATION
SCALE: 1/4" = 1'-0"

AA-505

DESIGN	BY R. Howell	CHECKED S. Danielson	
DETAILS	BY Z. Sadat	CHECKED R. Howell	
QUANTITIES	BY	CHECKED	

PREPARED FOR THE
STATE OF CALIFORNIA
DEPARTMENT OF TRANSPORTATION

PROJECT ENGINEER

BRIDGE NO.

POST MILE

SFOBB TOLL PLAZA CANOPY RENOVATIONS
PUMP STATION INTERIOR ELEVATIONS

DESIGN GENERAL PLAN SHEET (ENGLISH) (REV. 06-01-09)

ORIGINAL SCALE IN INCHES FOR REDUCED PLANS 0 1 2 3

CU BATA011
EA 4G2801/4G2901

DISREGARD PRINTS BEARING EARLIER REVISION DATES

REVISION DATES (PRELIMINARY STAGE ONLY) -

SHEET 29 OF 64

C:\Documents and Settings\reyesl\My Documents\SFOBB-Canopy-Arch_reyesl.rvt

6/26/2012 2:18:59 PM

DIST.	COUNTY	ROUTE	POST MILES TOTAL PROJECT	SHEET NO.	TOTAL SHEETS
04	Ala	80	2.0/2.3	49	83

REGISTERED ARCHITECT — DATE 06/26/2012

PLANS APPROVAL DATE

STATE OF CALIFORNIA — SCOTT L. DANIELSON — 6/30/2013 — CERTIFICATE NO. C 61248 — REGISTERED ARCHITECT

The State of California or its officers or agents shall not be responsible for the accuracy or completeness of electronic copies of this plan sheet.

Parsons Brinckerhoff Inc.
303 Second Street, Suite 700N
San Francisco, CA 94107

Bay Area Toll Authority
101 Eight Street
Oakland, CA 94607

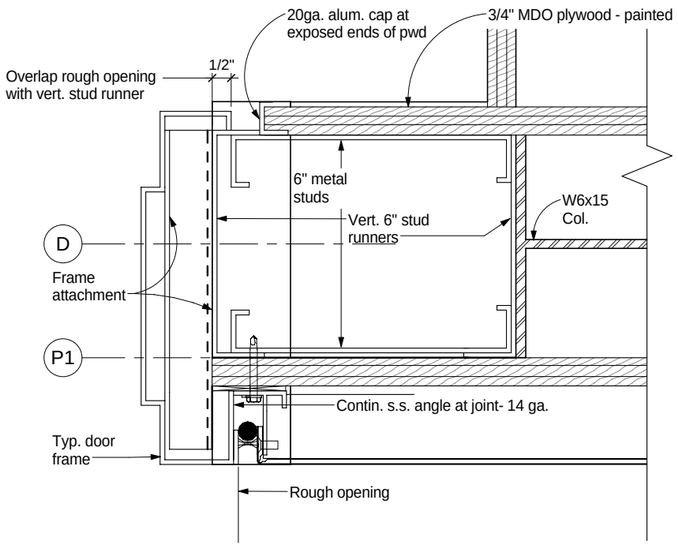

1 DETAIL - JAMB AT DOOR FRAME
SCALE: 6" = 1'-0"

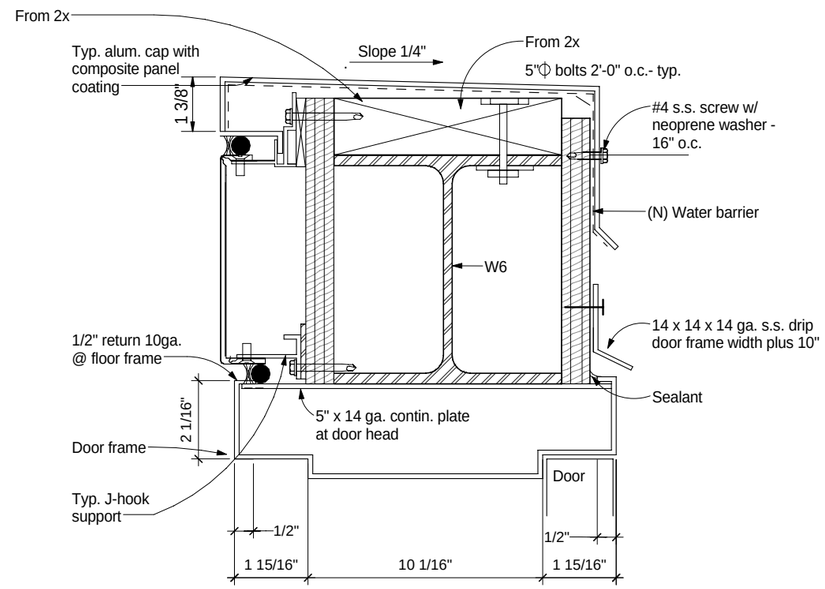

B SECTION - DOOR HEAD
SCALE: 6" = 1'-0"

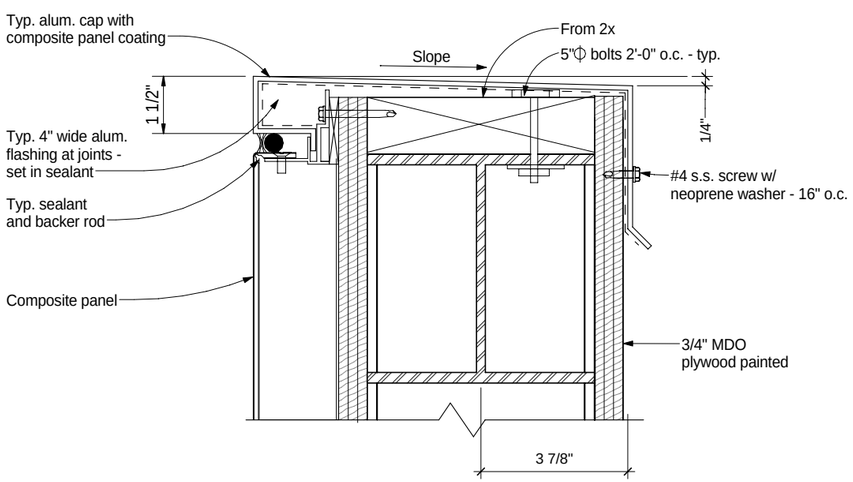

2 SECTION -TOP OF WALL
SCALE: 6" = 1'-0"

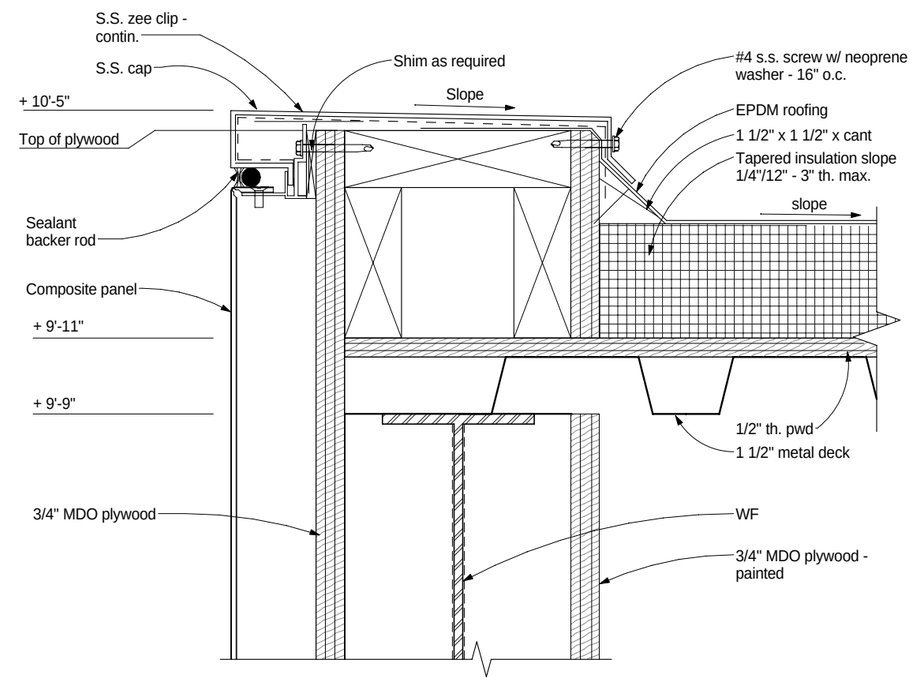

3 TYP. SECTION AT ROOF
SCALE: 6" = 1'-0"

AA-506

DESIGN	BY R. Howell	CHECKED S. Danielson	
DETAILS	BY Z. Sadat	CHECKED R. Howell	
QUANTITIES	BY	CHECKED	

PREPARED FOR THE STATE OF CALIFORNIA DEPARTMENT OF TRANSPORTATION

PROJECT ENGINEER

BRIDGE NO.

POST MILE

SFOBB TOLL PLAZA CANOPY RENOVATIONS
PUMP STATION DETAILS 1

DESIGN GENERAL PLAN SHEET (ENGLISH) (REV. 06-01-09)

ORIGINAL SCALE IN INCHES FOR REDUCED PLANS 0 1 2 3

CU BATA011
EA 4G2801/4G2901

DISREGARD PRINTS BEARING EARLIER REVISION DATES

REVISION DATES (PRELIMINARY STAGE ONLY)

SHEET 30 OF 64

C:\Documents and Settings\reyesl\My Documents\SFOBB-Canopy-Arch_reyesl.rvt

6/26/2012 2:18:59 PM

DIST.	COUNTY	ROUTE	POST MILES TOTAL PROJECT	SHEET NO.	TOTAL SHEETS
04	Ala	80	2.0/2.3	50	83

REGISTERED ARCHITECT — DATE 06/26/2012

PLANS APPROVAL DATE

STATE OF CALIFORNIA — SCOTT L. DANIELSON — 6/30/2013 — CERTIFICATE NO. C 61248 — REGISTERED ARCHITECT

The State of California or its officers or agents shall not be responsible for the accuracy or completeness of electronic copies of this plan sheet.

Parsons Brinckerhoff Inc.
303 Second Street, Suite 700N
San Francisco, CA 94107

Bay Area Toll Authority
101 Eight Street
Oakland, CA 94607

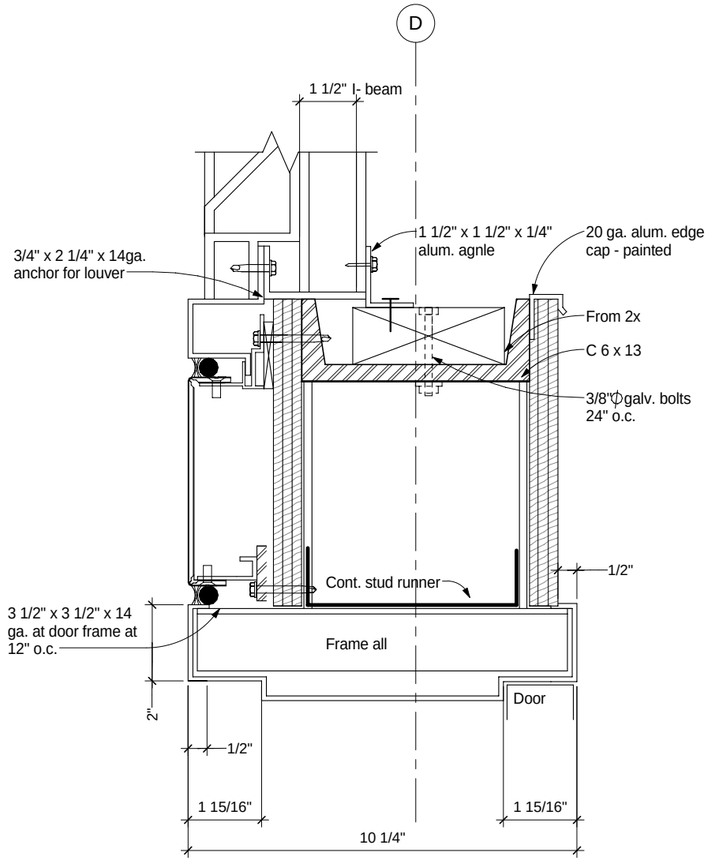

1 DETAIL - DOOR HEAD AND LOUVER SILL
SCALE: 6" = 1'-0"

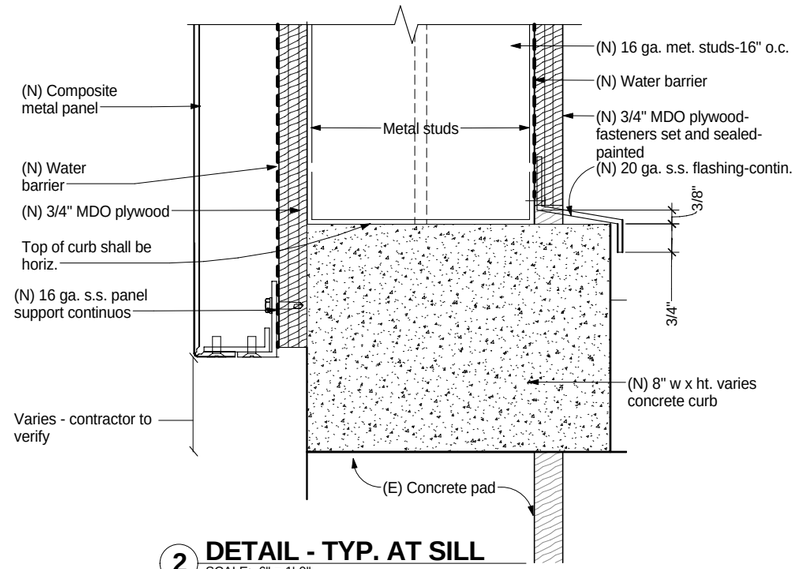

2 DETAIL - TYP. AT SILL
SCALE: 6" = 1'-0"

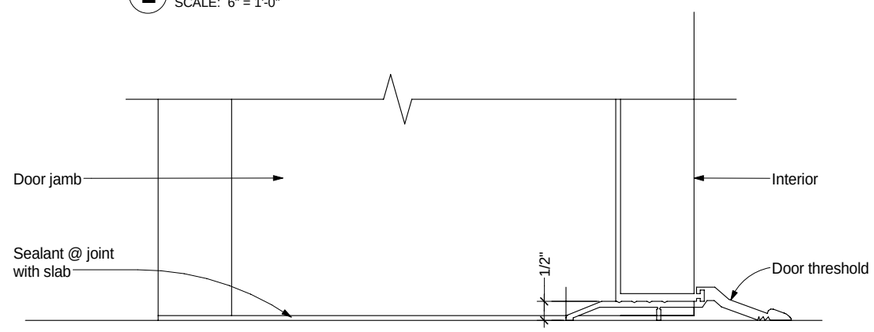

4 DETAIL - TYP. DOOR SILL
SCALE: 6" = 1'-0"

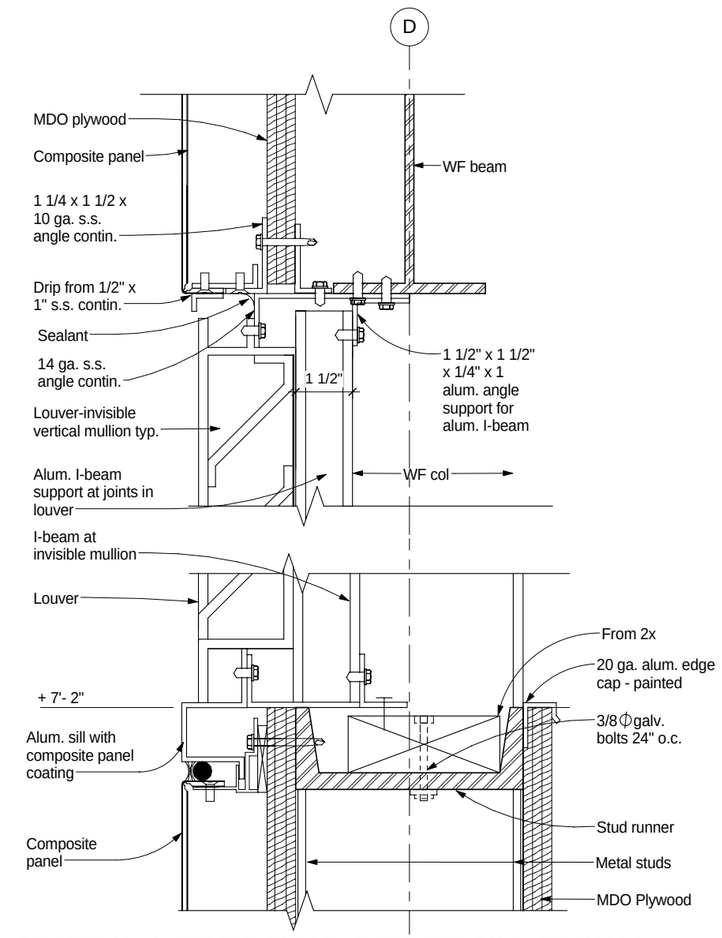

5 SECTION - LOUVER HEAD/ LOUVER SILL AT WALL
SCALE: 6" = 1'-0"

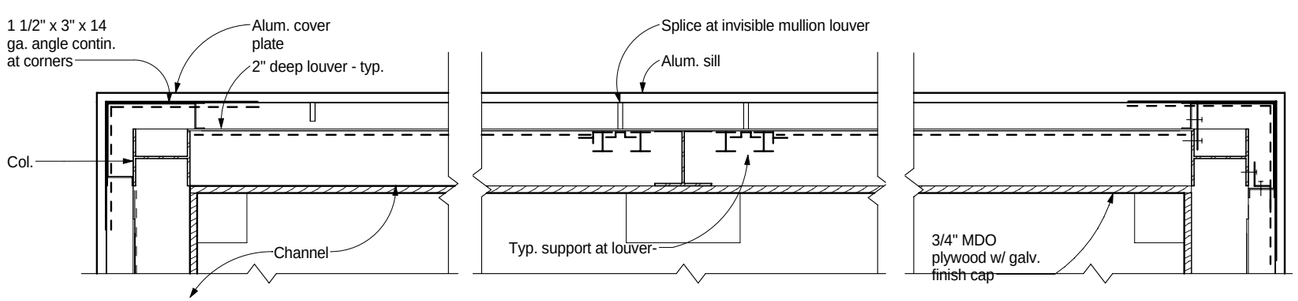

3 TYP. PLAN AT INVISIBLE MULLION LOUVERS
SCALE: 1 1/2" = 1'-0"

AA-507

DESIGN	BY R. Howell	CHECKED S. Danielson	
DETAILS	BY Z. Sadat	CHECKED R. Howell	
QUANTITIES	BY	CHECKED	

PREPARED FOR THE STATE OF CALIFORNIA DEPARTMENT OF TRANSPORTATION

PROJECT ENGINEER

BRIDGE NO.

POST MILE

SFOBB TOLL PLAZA CANOPY RENOVATIONS
PUMP STATION DETAILS 2

DESIGN GENERAL PLAN SHEET (ENGLISH) (REV. 06-01-09)

ORIGINAL SCALE IN INCHES FOR REDUCED PLANS 0 1 2 3

CU BATA011
EA 4G2801/4G2901

DISREGARD PRINTS BEARING EARLIER REVISION DATES

REVISION DATES (PRELIMINARY STAGE ONLY)

SHEET 31 OF 64

C:\Documents and Settings\reyesl\My Documents\SFOBB-Canopy-Arch_reyesl.rvt

6/26/2012 2:17:01 PM

DIST.	COUNTY	ROUTE	POST MILES TOTAL PROJECT	SHEET NO.	TOTAL SHEETS
04	Ala	80	2.0/2.3	51	83

REGISTERED ARCHITECT — DATE 06/26/2012

PLANS APPROVAL DATE

STATE OF CALIFORNIA — SCOTT L. DANIELSON — 6/30/2013 — CERTIFICATE NO. C 61248 — REGISTERED ARCHITECT

The State of California or its officers or agents shall not be responsible for the accuracy or completeness of electronic copies of this plan sheet.

Parsons Brinckerhoff Inc.
303 Second Street, Suite 700N
San Francisco, CA 94107

Bay Area Toll Authority
101 Eight Street
Oakland, CA 94607

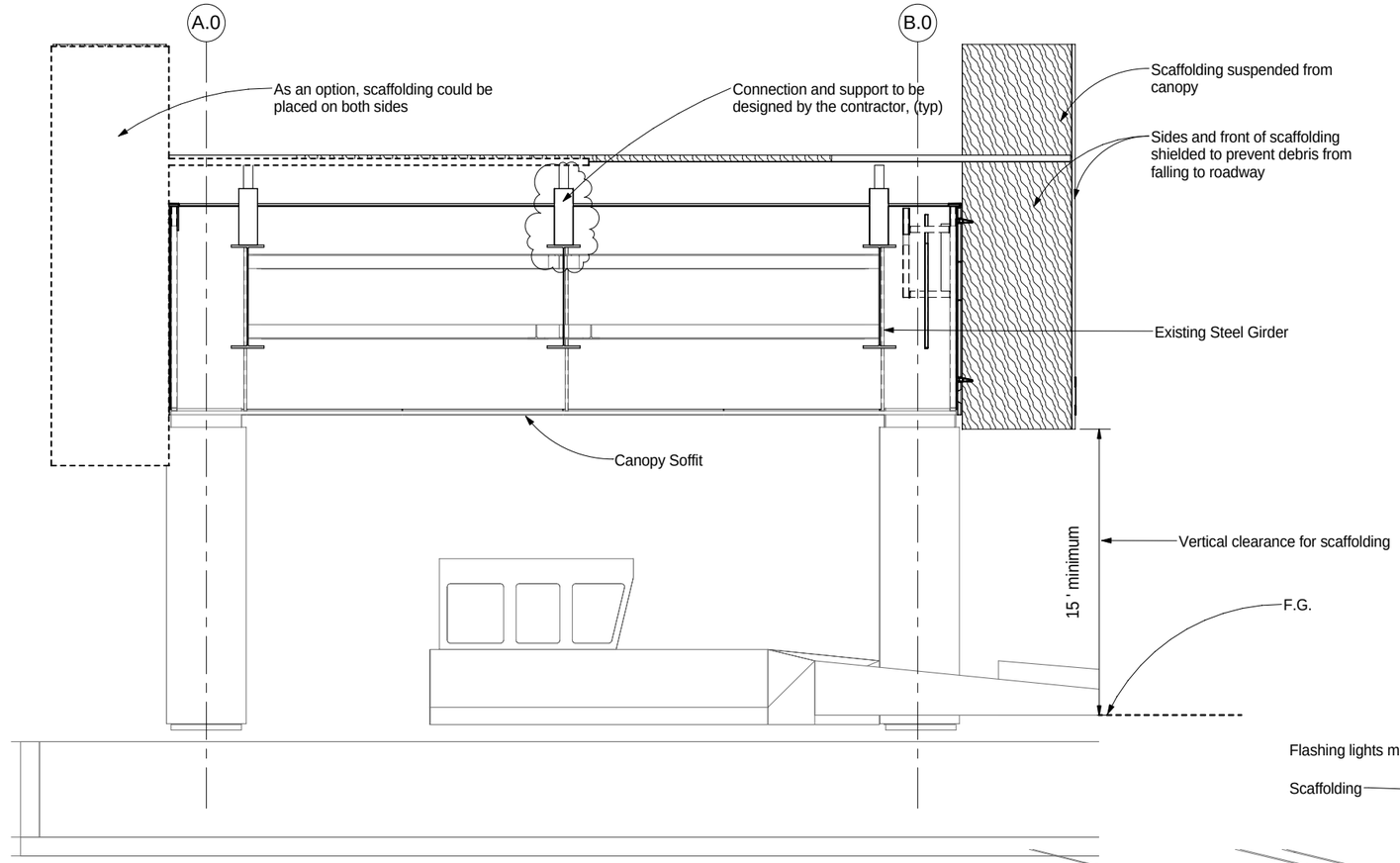

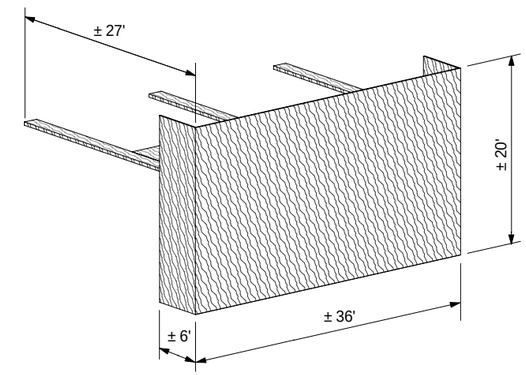

SECTION A-A

SCALE: 1/4" = 1'-0"

NOTE:
For freewy vertical clearance requirement see C-6

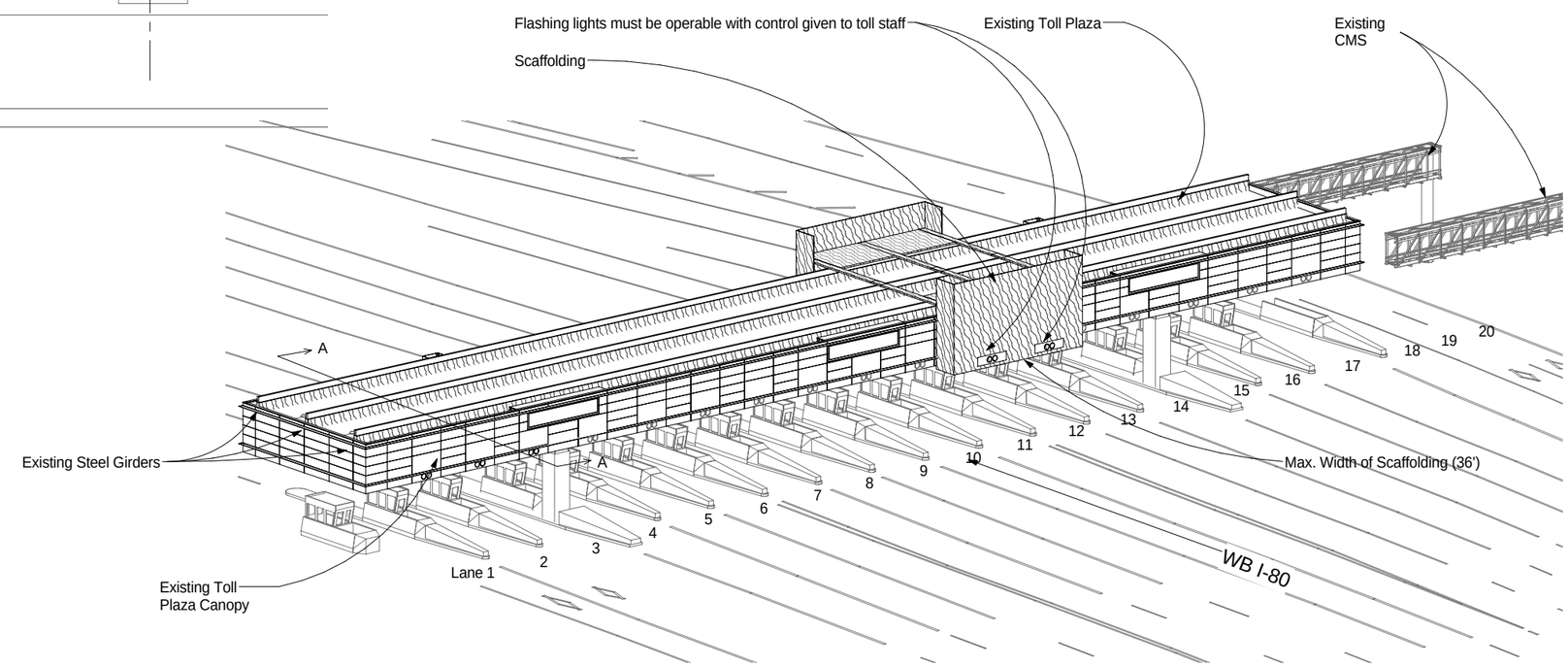

ALTERNATIVE CONSTRUCTION METHODOLOGY

AA-509

DESIGN	BY B. Howell	CHECKED S. Danielson	
DETAILS	BY L. Chummers	CHECKED R. Howell	
QUANTITIES	BY	CHECKED	

PREPARED FOR THE STATE OF CALIFORNIA DEPARTMENT OF TRANSPORTATION

PROJECT ENGINEER

BRIDGE NO.

POST MILE

SFOBB TOLL PLAZA CANOPY RENOVATIONS

OPTIONAL SCAFFOLDING SYSTEM

DESIGN GENERAL PLAN SHEET (ENGLISH) (REV. 06-01-09)

ORIGINAL SCALE IN INCHES FOR REDUCED PLANS 0 1 2 3

CU BATA011
EA 4G2801/4G2901

DISREGARD PRINTS BEARING EARLIER REVISION DATES

REVISION DATES (PRELIMINARY STAGE ONLY)

SHEET 32 OF 64

C:\Documents and Settings\reyesl\My Documents\SFOBB-Canopy-Arch_reyesl.rvt

6/26/2012 2:17:05 PM

DIST.	COUNTY	ROUTE	POST MILES TOTAL PROJECT	SHEET NO.	TOTAL SHEETS
04	Ala	80	2.0/2.3	52	83

REGISTERED ARCHITECT — DATE 06/26/2012

PLANS APPROVAL DATE

STATE OF CALIFORNIA — SCOTT L. DANIELSON — 6/30/2013 — CERTIFICATE NO. C 61248 — REGISTERED ARCHITECT

The State of California or its officers or agents shall not be responsible for the accuracy or completeness of electronic copies of this plan sheet.

Parsons Brinckerhoff Inc.
303 Second Street, Suite 700N
San Francisco, CA 94107

Bay Area Toll Authority
101 Eight Street
Oakland, CA 94607

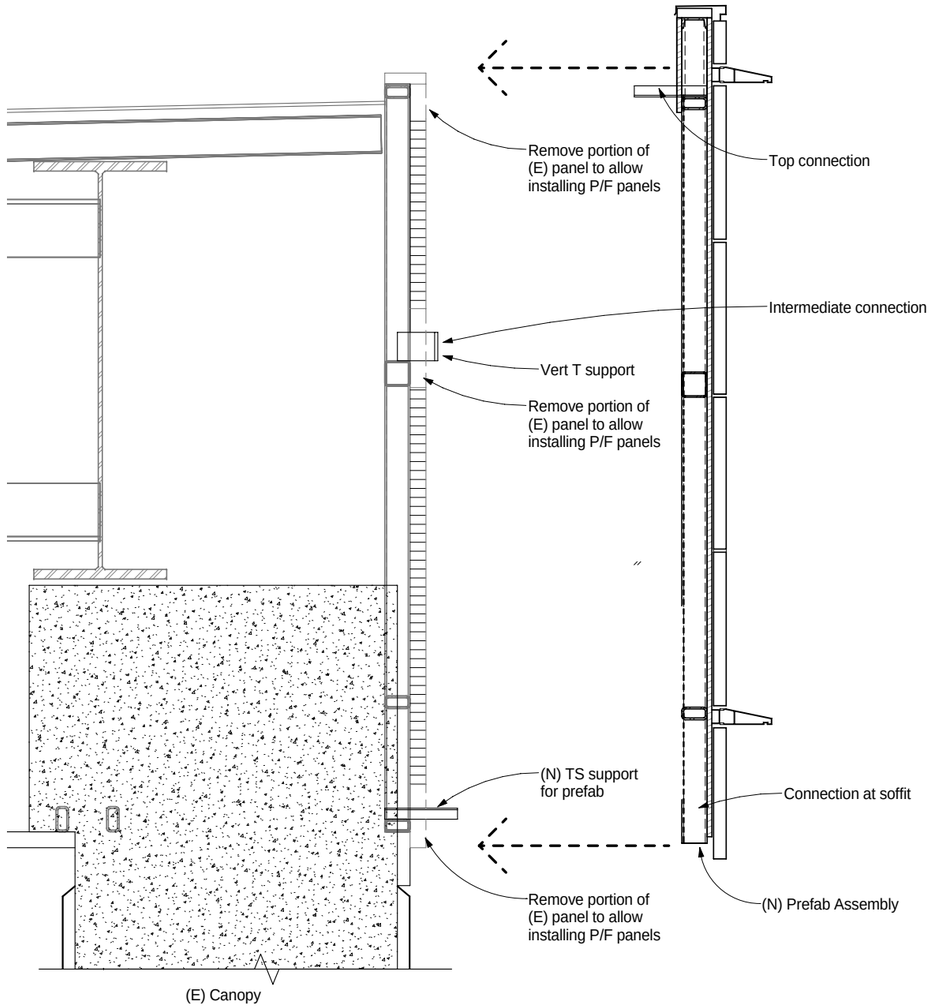

EXPLODED SECTION - OPTIONAL PREFABRICATED SYSTEM

SCALE: 1" = 1'-0"

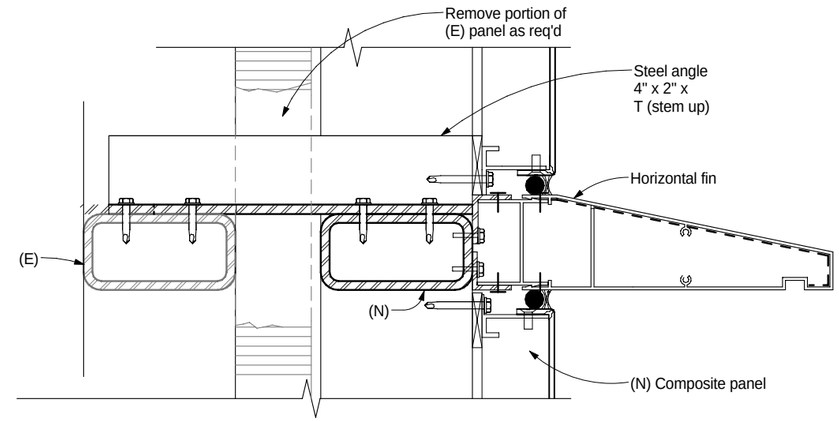

TYP. SECTION - TOP CONNECTION

SCALE: 6" = 1'-0"

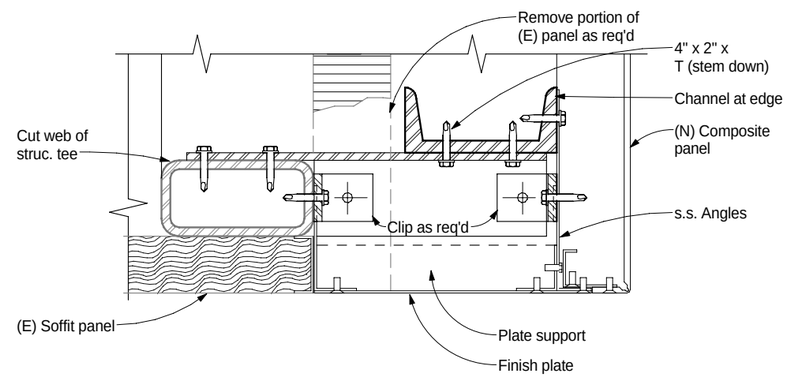

TYP SECTION AT SOFFIT

SCALE: 6" = 1'-0"

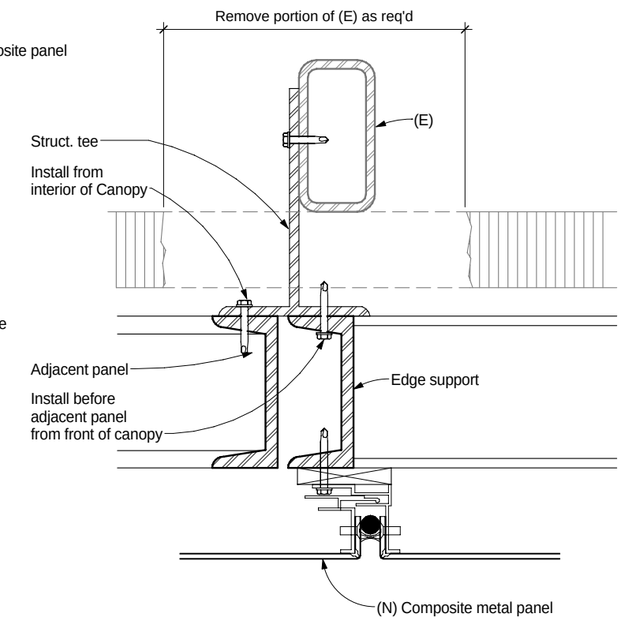

TYP. PLAN - INTERMEDIATE CONNECTION

SCALE: 6" = 1'-0"

OPTIONAL PREFABRICATED NOTES:

1. A prefabricated method of construction is acceptable for the installation of the cladding on the following bases:
   - A) The new cladding system may be installed over the existing cladding.
   - B) The existing cladding may be cut or removed, as required.

2. Panel Assembly:
   - A) Duplicate the existing cladding sub-frame and support system.
   - B) Duplicate the existing clearances, and openings at CMS clocks, EMS signs, and Traffic Lights.
   - C) Diagrammatic details are shown above to show an approach to supports for a prefabricated method at the top, bottom, and intermediate locations on the assemblies.

3. Fabrication:
   - A) Assembly of prefabricated panels may be done off-site or in the Contractor's areas on-site.
   - B) Submit structural calculations of sub-frame and lifting system for review.
   - C) Deflection of the panel assembly must be limited to 1/240 th of spans at all times during fabrication, transportation, lifting, and installation.
   - D) The new cladding assembly shall duplicate, or be similar, to the existing sub-frame performance, weight, geometry, dimensions, and clearances.
   - E) The plywood layer of the cladding system may be eliminated from the prefabricated assembly system, if adequate coordinated support is provided.

4. Installation:
   - A) Attach the prefabricated assembly to the existing sub-frame.
   - B) The installation process is limited to the closure of four (4) toll lanes during night working hours, per specifications.
   - C) The working space above the closed toll lanes shall allow a minimum one-half lane on each side of the prefabricated assembly installation, unless authorized otherwise by the Engineer.
   - D) The Contractor shall maintain:
     - 1) Temporary traffic lights at each closed lane, per specifications.
     - 2) Temporary signage at each closed lane per specifications.
   - E) The contractor shall coordinate access across live traffic lanes to the work area with the Engineer.

AA-510

DESIGN	BY B. Howell	CHECKED S. Danielson	
DETAILS	BY Z. Sadat	CHECKED R. Howell	
QUANTITIES	BY	CHECKED	

PREPARED FOR THE STATE OF CALIFORNIA DEPARTMENT OF TRANSPORTATION

PROJECT ENGINEER

BRIDGE NO.

POST MILE

SFOBB TOLL PLAZA CANOPY RENOVATIONS

OPTIONAL PREFABRICATED SYSTEM

DESIGN GENERAL PLAN SHEET (ENGLISH) (REV. 06-01-09)

ORIGINAL SCALE IN INCHES FOR REDUCED PLANS 0 1 2 3

CU BATA011
EA 4G2801/4G2901

DISREGARD PRINTS BEARING EARLIER REVISION DATES

REVISION DATES (PRELIMINARY STAGE ONLY)

SHEET 33 OF 64

C:\Documents and Settings\reyesl\My Documents\SFOBB-Canopy-Arch_reyesl.rvt

6/26/2012 2:17:07 PM

DIST.	COUNTY	ROUTE	POST MILES TOTAL PROJECT	SHEET NO.	TOTAL SHEETS
04	Ala	80	2.0/2.3	53	83

REGISTERED ENGINEER — DATE 06/26/2012

PLANS APPROVAL DATE

REGISTERED PROFESSIONAL ENGINEER — MEE SHING OWYANG — No. 2246 — STRUCTURAL — STATE OF CALIFORNIA

The State of California or its officers or agents shall not be responsible for the accuracy or completeness of electronic copies of this plan sheet.

Parsons Brinckerhoff Inc.
303 Second Street, Suite 700N
San Francisco, CA 94107

Bay Area Toll Authority
101 Eight Street
Oakland, CA 94607

ABBREVIATIONS

A.B.	Anchor bolt/Anchor Rod
&	And
Arch.	Architecture
@	At
L	Angle (structural)
BM.	Beam
BRG.	Bearing
Bott.	Bottom
B.O.	Bottom Of
C	C Shape (Structural)
Col.	Column
Conc.	Concrete
Const.	Construction
C. J.	Construction Joint
Cont.	Continuous
℄	Centerline
CLR.	Clear
D. L.	Dead Load
DEG. or o	Degree
DET.	Detail
DIA. Or Φ	Diameter
DIM.	Dimension
DBL.	Double
DN.	Down
DWG.	Drawing
D. O.	Ditto
EA.	Each
E. F.	Each Face
E. W.	Each Way
EL.	Elevation
EQ. or =	Equal
EXP.	Expansion
EXIT. Or (E)	Exiting
FT.	Feet
FIN.	Finish
FL.	Floor
FTG.	Footing
FDN.	Foundation
GA.	Gauge or Gage
GALV.	Galvanized
GR.	Grade
H. R.	Hand Rail
HT.	Height
H. P.	High Point
HORIZ.	Horizontal
H. S. B.	High Strength Bolt
HSS	Hollow Structural Section
IN.	Inch
I. D.	Inside Diameter
I. F.	Inside Face
INV.	Invert
JT.	Joint
K.	kip (1,000 lb)
KSF	Kips Per Square Foot
KSI	Kips Per Square Inch
KCF	Kips per Cubic Foot
L. L.	Live Load
L. P.	Low Point
M	M Shape (structural)
MAX.	Maximum
M. B.	Machine Bolt
MC	MC Shape (structural)
MIN.	Minimum
MISC .	Miscellanous
MT	MT Shape (structural)
(N)	New
N. F.	Near Face
N. I. C.	Not in Contract
N. T. S.	Not to Scale
NOML.	Nominal
NO.	Number
#	Number (rebar size)
O. C.	On Center
OPNG.	Opening
OPP. H.	Opposite Hand
O. D.	Outside Diameter
O. F.	Outside Face
LB.	Pounds
PCF	Pounds per Cubic Foot
PSF	Pounds per Square Foot
PSI	Pounds per Square Inch
RAD.	Radius
REF.	Reference
REINF.	Reinforcement
R. C.	Reinforced Concrete
S	S Shape (structural)
SCH.	Schedule
SECT.	Section
SHT.	Sheet
SPEC.	Specification
SQ.	Square
SQ. IN.	Square inch
SQ. Ft.	Square foot
STD.	Standard
STIFF.	Stiffener
STIR.	Stirrup
SYM.	Symmetrical
T. & B.	Top and Bottom
T. O. C.	Top of Concrete
T. O. P.	Top of Plate
T. O. S.	Top of Steel
TYP.	Typical
UNFIN.	Unfinished
U. N.	Unless Noted
Vert.	Vertical
W	W shape (structural)
W. P.	Work Point
WT.	Weight
W/	With
WD.	Wood

STRUCTURAL GENERAL NOTES

A. Reinforced Concrete

1. All concrete shall be normal weight with type II, low alkali Portal cement and ultimate compressive strength @ 28 days of 4,000 psi.
2. Reinforcement for structural concrete shall be deformed steel bars conforming to ASTM A706, with nominal yield strength of 60,000 psi.
3. Concrete work shall conform to all requirements of ACI 302, specifications for Structural Concrete for Buildings.
4. See CALTRANS standard specifications for other specific requirements.

B. Structural Steel

1. All structural steel shall conform to the following ASTM material standard:

Shape/Section	ASTM
W	A992 Grade 50
M, S, C, MC	A36
L	A36
HSS	A500 Grade B
Plates and bars	A36

2. All structural bolted connections shall be made using ¾" diameter high strength steel tension control bolts conforming to ASTM A325, slip-critical connection, Class A type, unless otherwise noted.
3. The installation and inspection of high strength steel bolted connections shall be in accordance with AISC specification for structural joints using ASTM A325 or A490 bolts.
4. All structural welded connections shall be made using electrodes conforming to AWS A5.1 or A5.5, E70XX.
5. Drop-in concrete anchors shall be made of steel, zinc plate conforming to ASTM B-633. Drop-in anchor shall be Rawl Snap-off flush, Saber-Tooth heavy duty bolt style anchor for use in concrete by Rawlplug Company Inc. or provided equal.
6. All anchor rods shall conform to ASTM A307 or A36.
7. Steel work shall conform to all requirements of AISC, code of standard practice for steel buildings and bridges, the latest edition.
8. See CALTRANS standard specifications for other specific requirements.

C. Roof Metal Deck

1. Corrugated steel roof deck units shall be 1 ½" deep with 16 gage metal, Type B deck or Type B profile as manufactured by United Steel Deck, Inc. and shall be made from steel conforming to ASTM A653 Grade 33. Galvanizing shall conform to the requirements of ASTM A653 coating class G60. Metal roof deck shall be continuous over at least two spans.
2. Unless otherwise noted on design drawings, steel deck units shall be fastened to the steel framework at ends of units and at all intermediate supports by ½" effective diameter puddle welds spaced not more than 12 inches on center across the width of the deck unit. Where two units abut, each unit shall be so fastened to the steel framing. Boundary puddle welds at perimeter supports shall be ½" effective diameter at 12 inches maximum spacing.

D. Light Gage Metal and Plywood Sheathing

1. For light metal stud between structural steel framing and plywood sheathing requirements for perimeter and interior walls, see Architectural plans.
2. All galvanized studs shall be formed from steel that corresponding to the minimum requirements of the latest A.I.S.I. standards. All galvanized studs, track, bridging and accessories shall be formed from steel having a galvanized coating meeting the requirement of ASTM A653.
3. All stud framing components shall be cut squarely for attachment to perpendicular members, or as required for an angular fit against abutting members. Members shall be held positively in place until properly fastened.
4. Fastening of metal stud components shall be with self-tapping screws or welding of sufficient size to insure the strength of the connection. Screw shall be No. 12-14 with a diameter of 0.210 inch.
5. Plywood sheathing shall be at least ½ inch thick (see Architectural plan for requirement) with structural I grade and shall be fastened to the structural steel members and light gage metal stud framings with screws. Screw shall be No. 8-18 with a diameter of 0.160 in. Screw spacing shall be at 6 inches on center at all panel edges and 12 inches on center at intermediate supports.

SYMBOLS

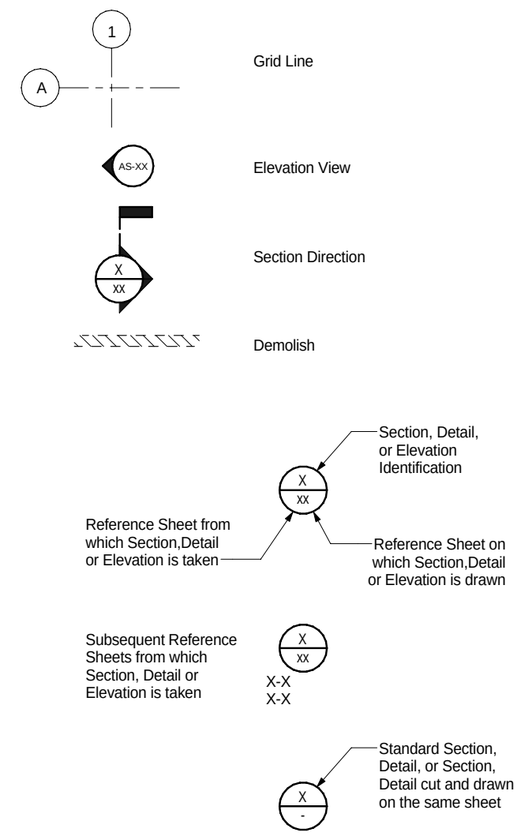

AS-001

DESIGN	BY L. Guggemos	CHECKED M.S. Owyang	
DETAILS	BY L. Reyes	CHECKED M.S. Owyang	
QUANTITIES	BY	CHECKED	

LOAD & RESISTANCE FACTOR DESIGN — LIVE LOADING: PERMIT DESIGN VEHICLE

LAYOUT — BY — CHECKED

SPECIFICATIONS — BY — PLANS AND SPECS COMPARED

PREPARED FOR THE STATE OF CALIFORNIA DEPARTMENT OF TRANSPORTATION

PROJECT ENGINEER

BRIDGE NO.

POST MILE

SFOBB TOLL PLAZA CANOPY RENOVATIONS

ABBREVIATIONS, SYMBOLS & GENERAL NOTES

DESIGN GENERAL PLAN SHEET (ENGLISH) (REV. 06-01-09)

ORIGINAL SCALE IN INCHES FOR REDUCED PLANS 0 1 2 3

CU BATA011
EA 4G2801/4G2901

DISREGARD PRINTS BEARING EARLIER REVISION DATES

REVISION DATES (PRELIMINARY STAGE ONLY)

SHEET 34 OF 64

C:\Documents and Settings\reyesl\My Documents\SFOBB-Canopy-Arch_reyesl.rvt

6/26/2012 2:17:14 PM

DIST.	COUNTY	ROUTE	POST MILES TOTAL PROJECT	SHEET NO.	TOTAL SHEETS
04	Ala	80	2.0/2.3	54	83

REGISTERED ENGINEER — DATE 06/26/2012

PLANS APPROVAL DATE

REGISTERED PROFESSIONAL ENGINEER — MEE SHING OWYANG — No. 2246 — STRUCTURAL — STATE OF CALIFORNIA

The State of California or its officers or agents shall not be responsible for the accuracy or completeness of electronic copies of this plan sheet.

Parsons Brinckerhoff Inc.
303 Second Street, Suite 700N
San Francisco, CA 94107

Bay Area Toll Authority
101 Eight Street
Oakland, CA 94607

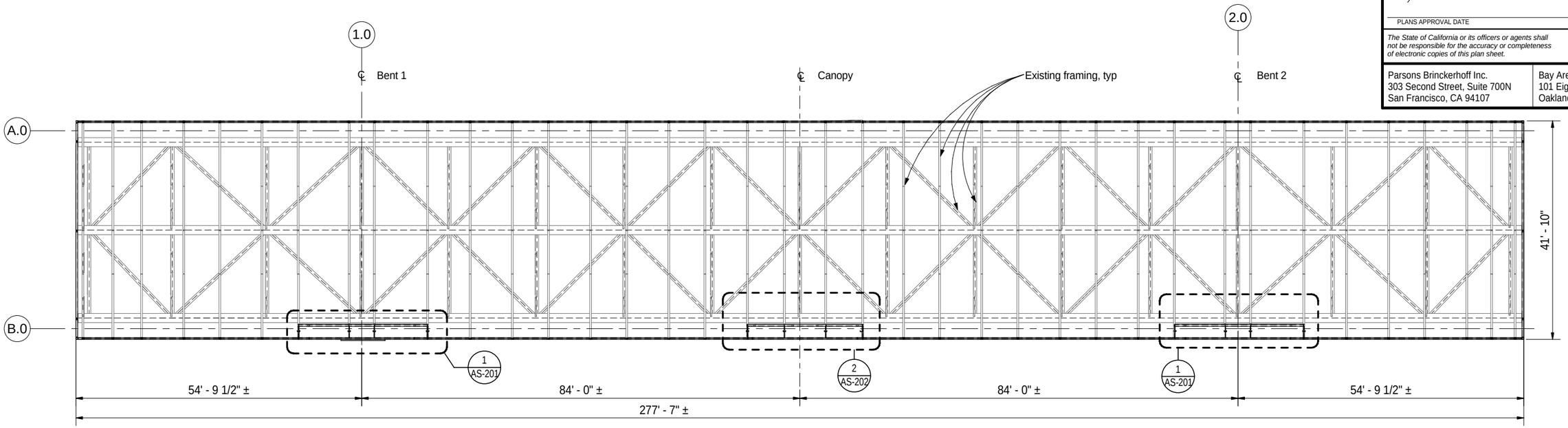

STRUCTURAL FRAMING PLAN AT ROOF

SCALE: 1" = 10'-0"

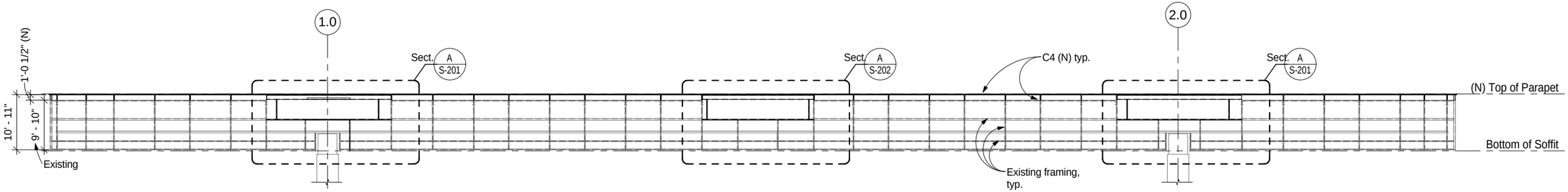

STRUCTURAL FRAMING - EAST ELEVATION

SCALE: 1" = 10'-0"

NOTES:

1. The Contractor shall verify in the field all controlling dimensions before ordering or fabricating any materials.
2. For general structural notes, see AS – 001.

AS-002

DESIGN	BY L. Guggemos	CHECKED M.S. Owyang	LOAD & RESISTANCE FACTOR DESIGN	LIVE LOADING: PERMIT DESIGN VEHICLE
DETAILS	BY L. Reyes	CHECKED M.S. Owyang	LAYOUT BY	CHECKED
QUANTITIES	BY	CHECKED	SPECIFICATIONS BY	PLANS AND SPECS COMPARED

PREPARED FOR THE STATE OF CALIFORNIA DEPARTMENT OF TRANSPORTATION

PROJECT ENGINEER

BRIDGE NO.

POST MILE

SFOBB TOLL PLAZA CANOPY RENOVATIONS

GENERAL STRUCTURAL PLAN AND ELEVATIONS

DESIGN GENERAL PLAN SHEET (ENGLISH) (REV. 06-01-09)

ORIGINAL SCALE IN INCHES FOR REDUCED PLANS 0 1 2 3

CU BATA011
EA 4G2801/4G2901

DISREGARD PRINTS BEARING EARLIER REVISION DATES

REVISION DATES (PRELIMINARY STAGE ONLY)

SHEET 35 OF 64

C:\Documents and Settings\reyesl\My Documents\SFOBB-Canopy-Arch_reyesl.rvt

6/26/2012 2:17:16 PM

DIST.	COUNTY	ROUTE	POST MILES TOTAL PROJECT	SHEET NO.	TOTAL SHEETS
04	Ala	80	2.0/2.3	55	83

REGISTERED ENGINEER — DATE 06/26/2012

PLANS APPROVAL DATE

REGISTERED PROFESSIONAL ENGINEER — MEE SHING OWYANG — No. 2246 — STRUCTURAL — STATE OF CALIFORNIA

The State of California or its officers or agents shall not be responsible for the accuracy or completeness of electronic copies of this plan sheet.

Parsons Brinckerhoff Inc.
303 Second Street, Suite 700N
San Francisco, CA 94107

Bay Area Toll Authority
101 Eight Street
Oakland, CA 94607

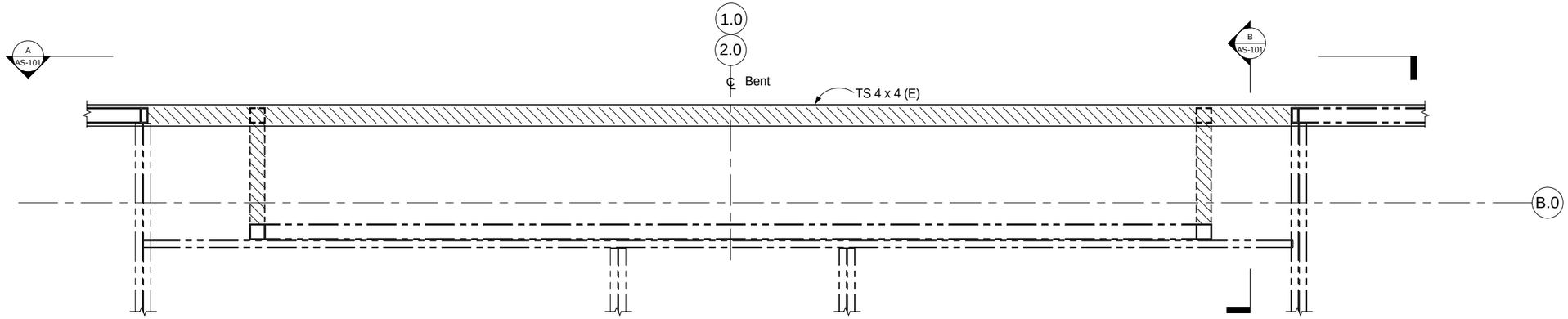

DEMOLITION PLAN AT CMS RECESS AREA (AT BENTS)

SCALE: 3/4" = 1'-0"

LEGEND:

Existing to be removed

Existing to remain

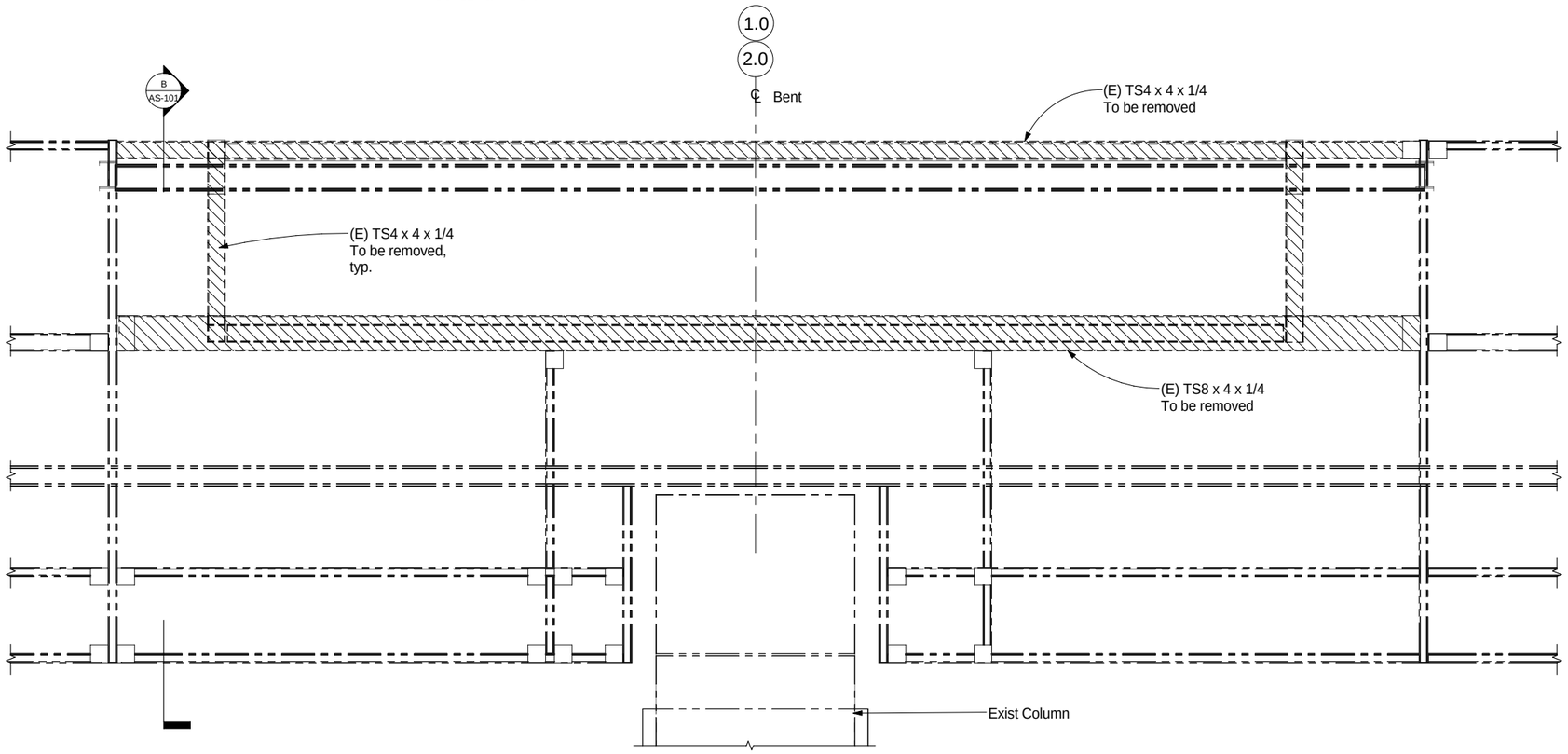

FRONT ELEVATION

SECTION A AS-101
SCALE: 3/4" = 1'-0"

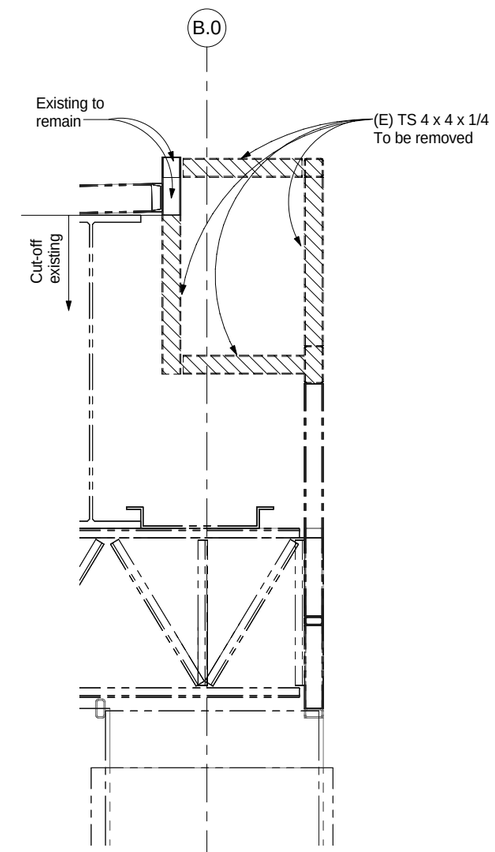

SECTION B AS-101
SCALE: 3/4" = 1'-0"

NOTES:

1. The Contractor shall verify in the field all controlling dimensions before ordering or fabricating any materials.
2. For general structural notes, see AS – 001.

AS-101

DESIGN	BY L. Guggemos	CHECKED M.S. Owyang	
DETAILS	BY L. Reyes	CHECKED M.S. Owyang	
QUANTITIES	BY	CHECKED	

PREPARED FOR THE STATE OF CALIFORNIA DEPARTMENT OF TRANSPORTATION

PROJECT ENGINEER

BRIDGE NO.

POST MILE

SFOBB TOLL PLAZA CANOPY RENOVATIONS

PARTIAL FRAMING DEMOLITION PLAN

DESIGN GENERAL PLAN SHEET (ENGLISH) (REV. 06-01-09)

ORIGINAL SCALE IN INCHES FOR REDUCED PLANS 0 1 2 3

CU BATA011
EA 4G2801/4G2901

DISREGARD PRINTS BEARING EARLIER REVISION DATES

REVISION DATES (PRELIMINARY STAGE ONLY)

SHEET 36 OF 64

C:\Documents and Settings\reyesl\My Documents\SFOBB-Canopy-Arch_reyesl.rvt

6/26/2012 2:17:17 PM

DIST.	COUNTY	ROUTE	POST MILES TOTAL PROJECT	SHEET NO.	TOTAL SHEETS
04	Ala	80	2.0/2.3	56	83

REGISTERED ENGINEER — DATE 06/26/2012

PLANS APPROVAL DATE

REGISTERED PROFESSIONAL ENGINEER — MEE SHING OWYANG — No. 2246 — STRUCTURAL — STATE OF CALIFORNIA

The State of California or its officers or agents shall not be responsible for the accuracy or completeness of electronic copies of this plan sheet.

Parsons Brinckerhoff Inc.
303 Second Street, Suite 700N
San Francisco, CA 94107

Bay Area Toll Authority
101 Eight Street
Oakland, CA 94607

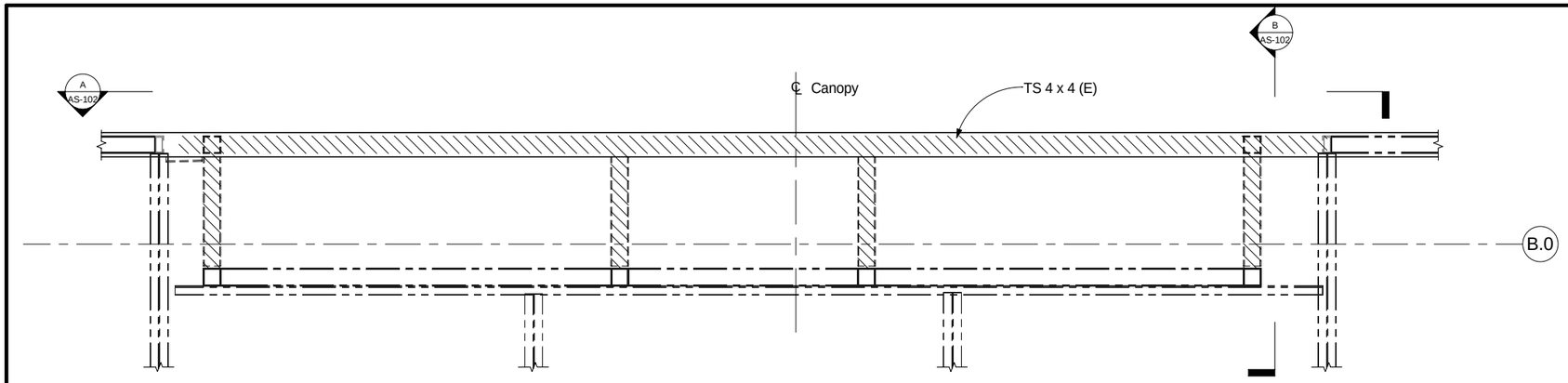

DEMOLITION PLAN AT CMS RECESS AREA (AT CL CANOPY)

SCALE: 3/4" = 1'-0"

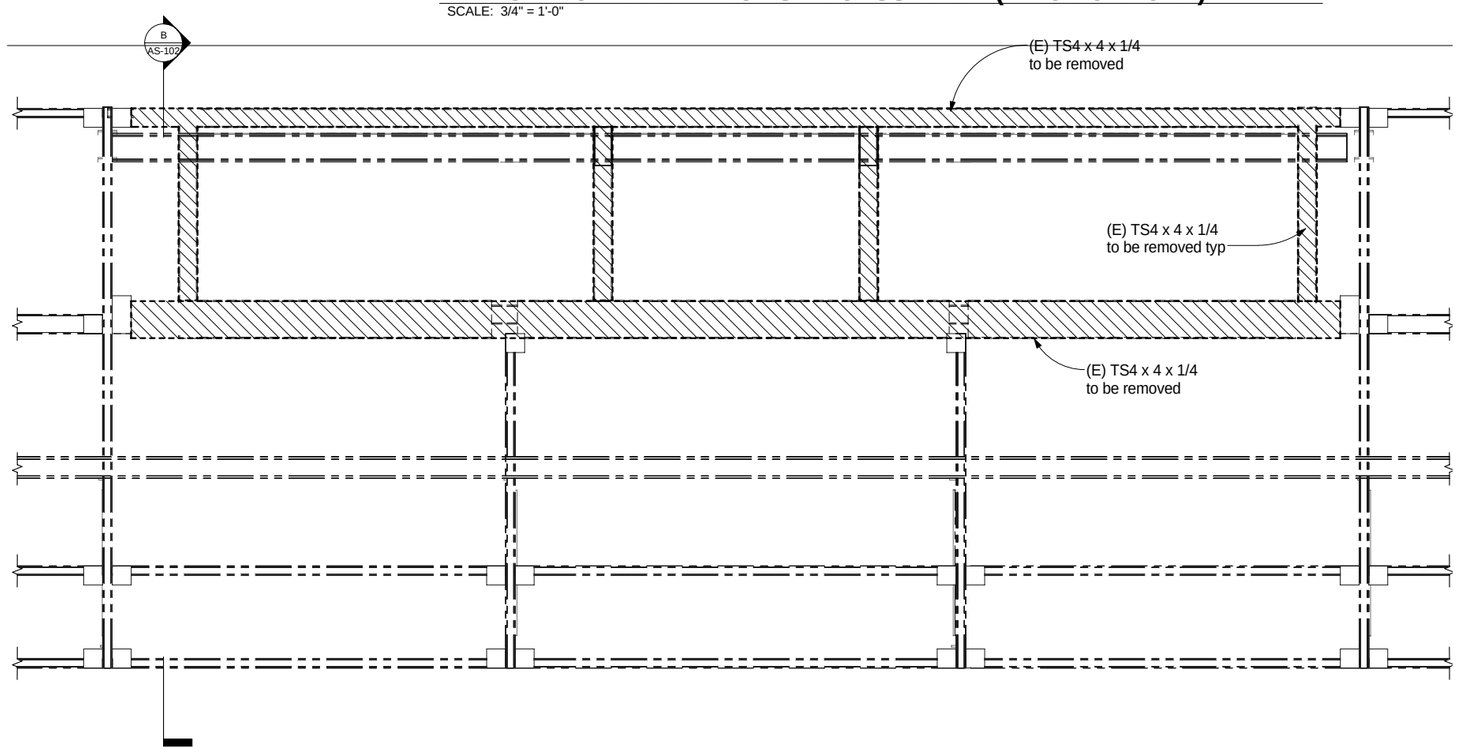

FRONT ELEVATION

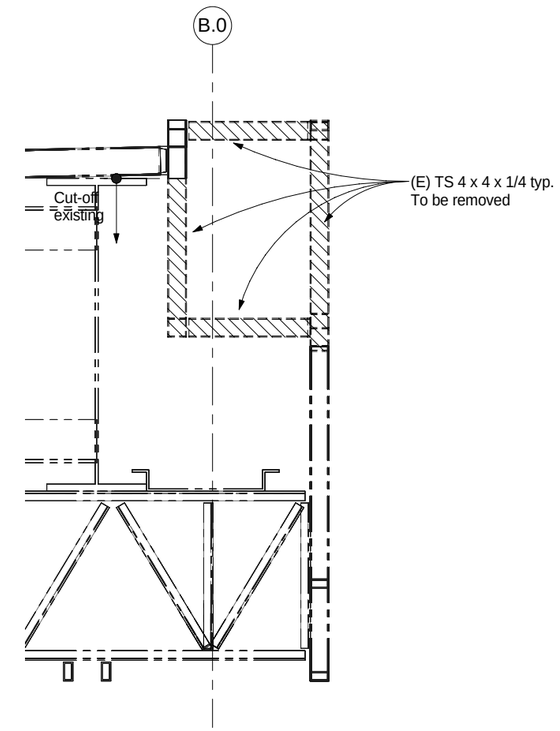

LEGEND:

- Existing to be removed
- Existing to remain

SECTION A AS-102
SCALE: 3/4" = 1'-0"

SECTION B AS-102
SCALE: 3/4" = 1'-0"

NOTES:

1. The Contractor shall verify in the field all controlling dimensions before ordering or fabricating any materials.
2. For general structural notes, see AS – 001.

AS-102

DESIGN	BY L. Guggemos	CHECKED M.S. Owyang	
DETAILS	BY L. Reyes	CHECKED M.S. Owyang	
QUANTITIES	BY	CHECKED	

PREPARED FOR THE STATE OF CALIFORNIA DEPARTMENT OF TRANSPORTATION

PROJECT ENGINEER

BRIDGE NO.

POST MILE

SFOBB TOLL PLAZA CANOPY RENOVATIONS

PARTIAL FRAMING DEMOLITION PLAN

DESIGN GENERAL PLAN SHEET (ENGLISH) (REV. 06-01-09)

ORIGINAL SCALE IN INCHES FOR REDUCED PLANS 0 1 2 3

CU BATA011
EA 4G2801/4G2901

DISREGARD PRINTS BEARING EARLIER REVISION DATES

REVISION DATES (PRELIMINARY STAGE ONLY)

SHEET 37 OF 64

C:\Documents and Settings\reyesl\My Documents\SFOBB-Canopy-Arch_reyesl.rvt

6/26/2012 2:17:18 PM

DIST.	COUNTY	ROUTE	POST MILES TOTAL PROJECT	SHEET NO.	TOTAL SHEETS
04	Ala	80	2.0/2.3	57	83

REGISTERED ENGINEER — DATE 06/26/2012

PLANS APPROVAL DATE

REGISTERED PROFESSIONAL ENGINEER — MEE SHING OWYANG — No. 2246 — STRUCTURAL — STATE OF CALIFORNIA

The State of California or its officers or agents shall not be responsible for the accuracy or completeness of electronic copies of this plan sheet.

Parsons Brinckerhoff Inc.
303 Second Street, Suite 700N
San Francisco, CA 94107

Bay Area Toll Authority
101 Eight Street
Oakland, CA 94607

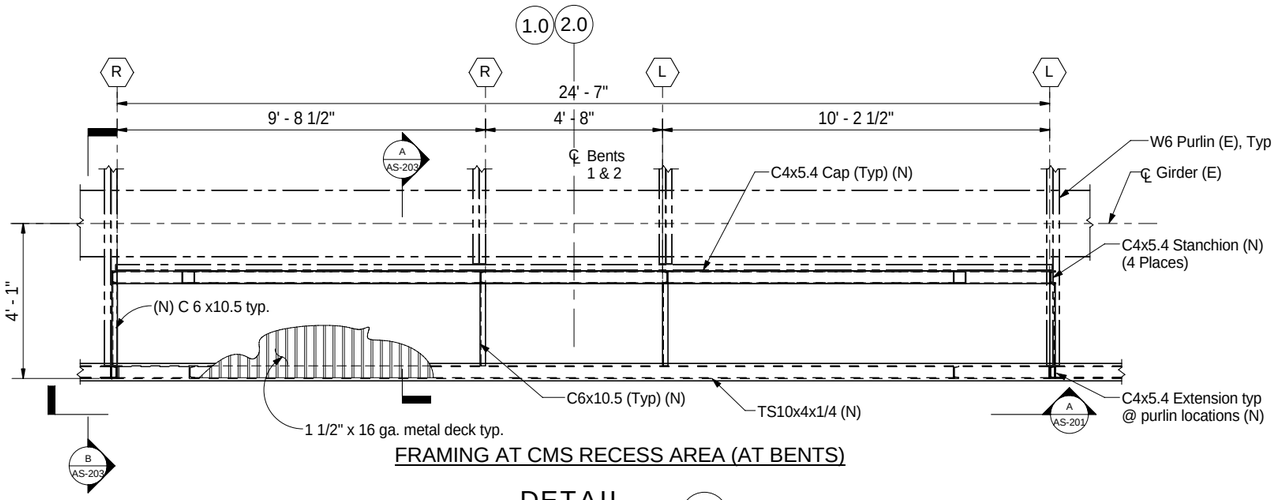

FRAMING AT CMS RECESS AREA (AT BENTS)

DETAIL 1 AS-002
SCALE: 1/2" = 1'-0"

NOTES:

1. The Contractor shall verify in the field all controlling dimensions before ordering or fabricating any materials.
2. For general structural notes, see AS – 001.

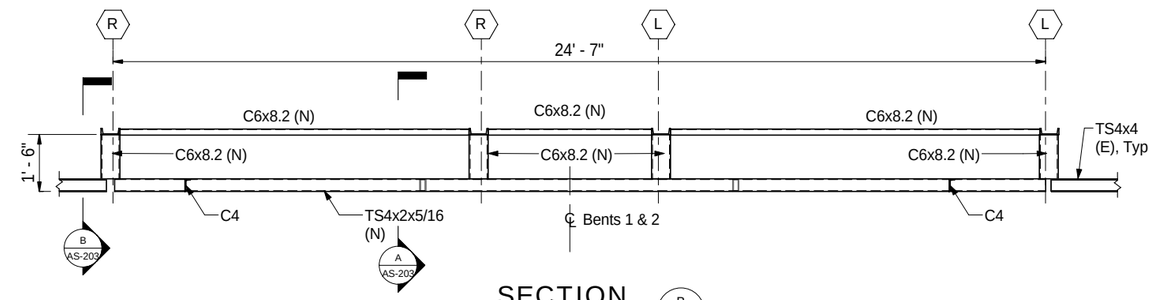

SECTION B AS-201
SCALE: 1/2" = 1'-0"

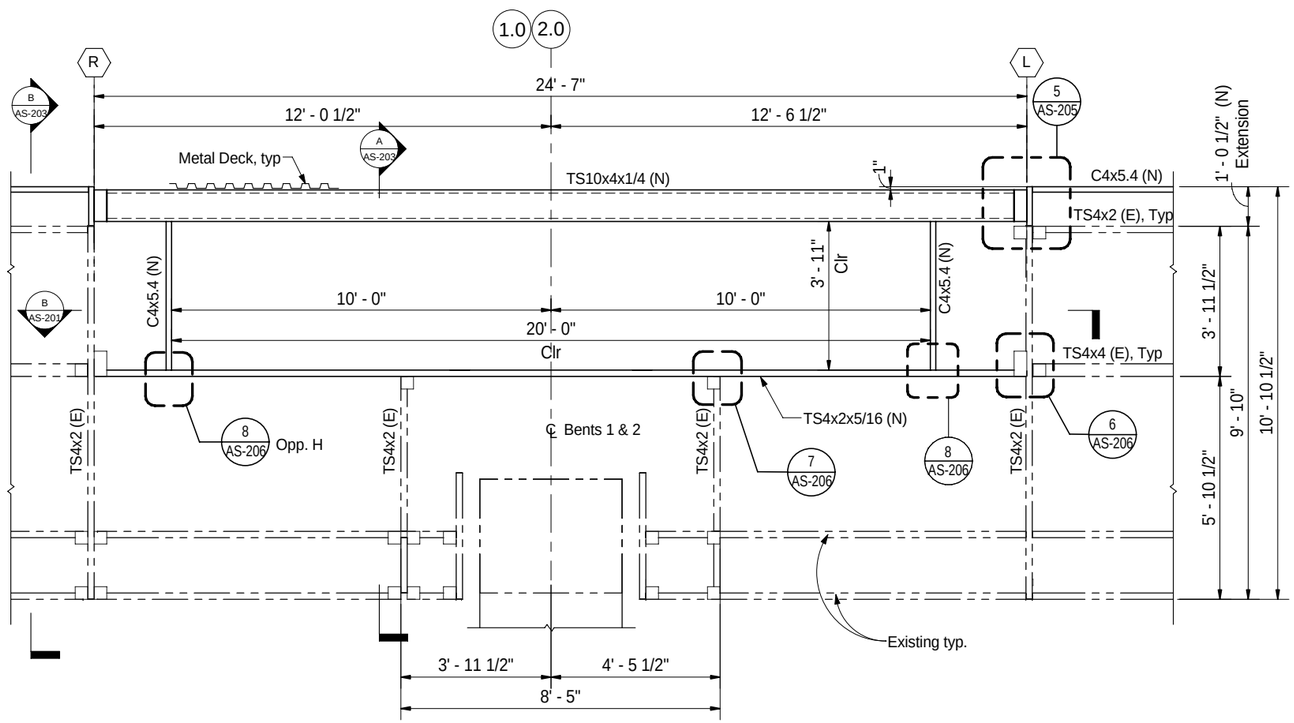

PARTIAL EAST-SIDE FRAMING @ BENTS

SECTION A AS-201
SCALE: 1/2" = 1'-0"

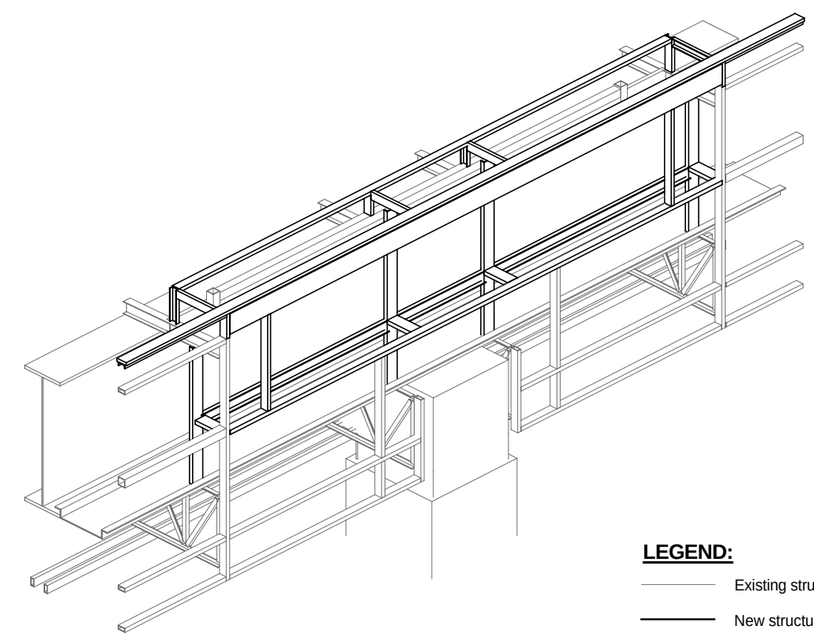

LEGEND:

Existing structure

New structure

ISOMETRIC VIEW
SCALE: 3/8"=1'-0"

AS-201

DESIGN	BY L. Guggemos	CHECKED M.S. Owyang	LOAD & RESISTANCE FACTOR DESIGN	LIVE LOADING: PERMIT DESIGN VEHICLE	
DETAILS	BY L. Reyes	CHECKED M.S. Owyang	LAYOUT	BY	CHECKED
QUANTITIES	BY	CHECKED	SPECIFICATIONS	BY	PLANS AND SPECS COMPARED

PREPARED FOR THE STATE OF CALIFORNIA DEPARTMENT OF TRANSPORTATION

PROJECT ENGINEER

BRIDGE NO.

POST MILE

SFOBB TOLL PLAZA CANOPY RENOVATIONS

PARTIAL FRAMING PLAN AND ELEVATION

DESIGN GENERAL PLAN SHEET (ENGLISH) (REV. 06-01-09)

ORIGINAL SCALE IN INCHES FOR REDUCED PLANS 0 1 2 3

CU BATA011
EA 4G2801/4G2901

DISREGARD PRINTS BEARING EARLIER REVISION DATES

REVISION DATES (PRELIMINARY STAGE ONLY)

SHEET 38 OF 64

C:\Documents and Settings\reyesl\My Documents\SFOBB-Canopy-Arch_reyesl.rvt

6/26/2012 2:17:20 PM

DIST.	COUNTY	ROUTE	POST MILES TOTAL PROJECT	SHEET NO.	TOTAL SHEETS
04	Ala	80	2.0/2.3	58	83

REGISTERED ENGINEER — DATE 06/26/2012

PLANS APPROVAL DATE

REGISTERED PROFESSIONAL ENGINEER — MEE SHING OWYANG — No. 2246 — STRUCTURAL — STATE OF CALIFORNIA

The State of California or its officers or agents shall not be responsible for the accuracy or completeness of electronic copies of this plan sheet.

Parsons Brinckerhoff Inc.
303 Second Street, Suite 700N
San Francisco, CA 94107

Bay Area Toll Authority
101 Eight Street
Oakland, CA 94607

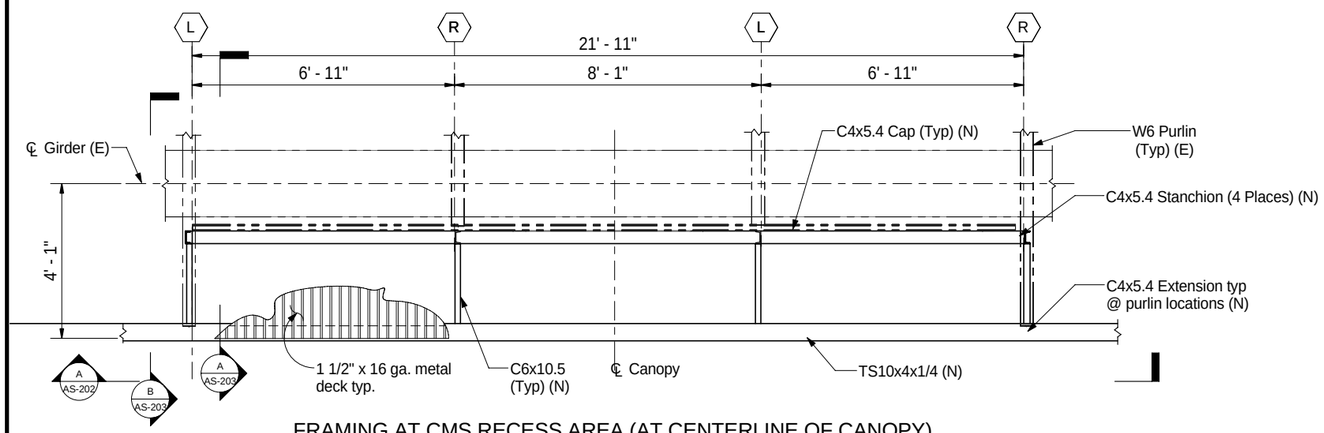

FRAMING AT CMS RECESS AREA (AT CENTERLINE OF CANOPY)

DETAIL 2 AS-002
SCALE: 1/2" = 1'-0"

NOTES:

1. The Contractor shall verify in the field all controlling dimensions before ordering or fabricating any materials.
2. For general structural notes, see AS – 001.

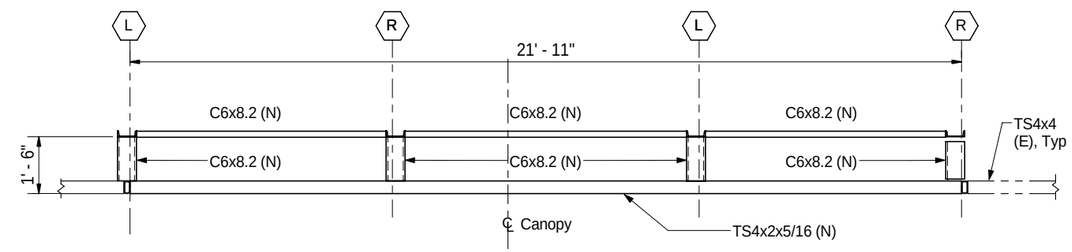

SECTION B AS-202
SCALE: 1/2" = 1'-0"

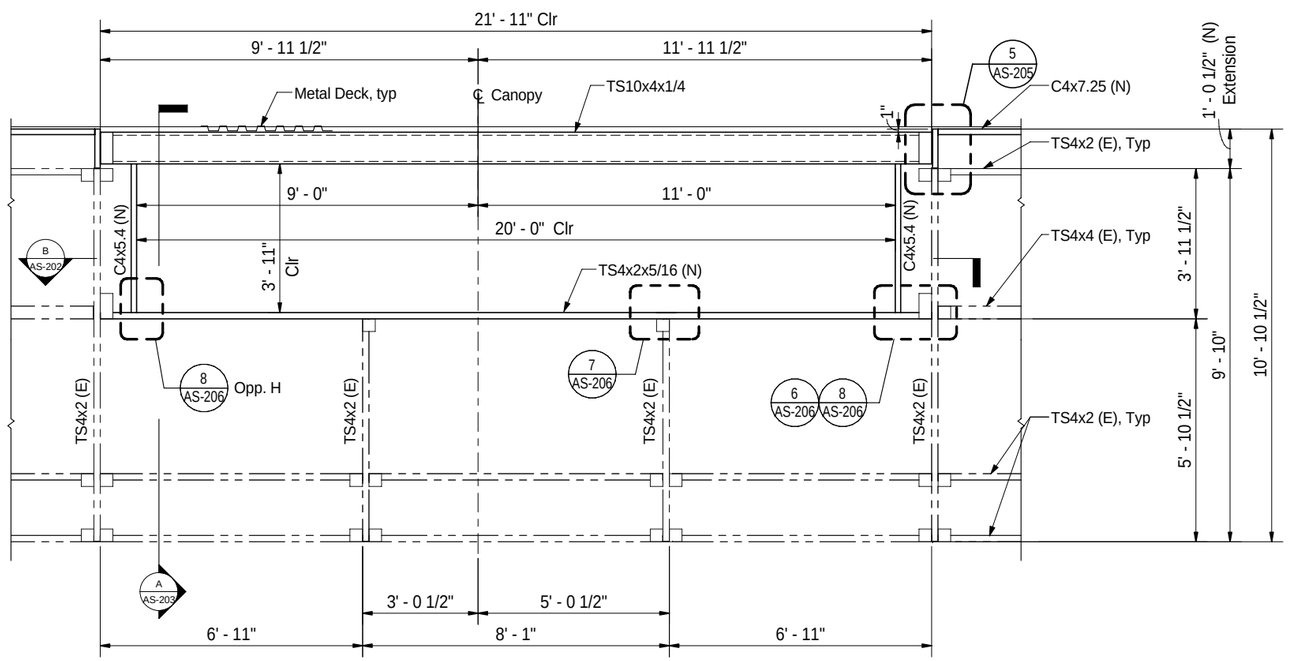

PARTIAL EAST-SIDE FRAMING AT CENTERLINE OF CANOPY

SECTION A AS-202
SCALE: 1/2" = 1'-0"

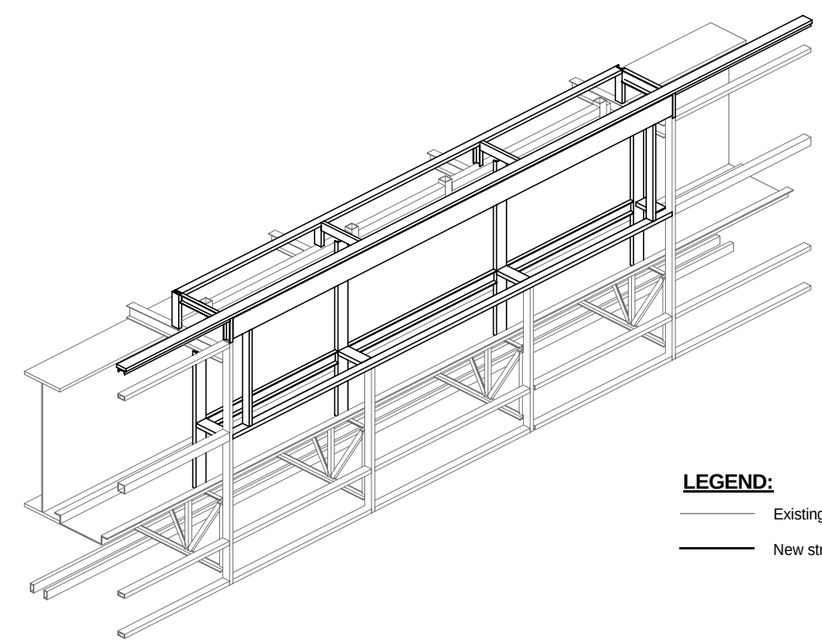

ISOMETRIC VIEW
SCALE: 3/8"=1'-0"

LEGEND:

Existing structure

New structure

AS-202

DESIGN	BY L. Guggemos	CHECKED M.S. Owyang	
DETAILS	BY L. Reyes	CHECKED M.S. Owyang	
QUANTITIES	BY	CHECKED	

PREPARED FOR THE STATE OF CALIFORNIA DEPARTMENT OF TRANSPORTATION

PROJECT ENGINEER

BRIDGE NO.

POST MILE

SFOBB TOLL PLAZA CANOPY RENOVATIONS

PARTIAL FRAMING PLAN AND ELEVATION

DESIGN GENERAL PLAN SHEET (ENGLISH) (REV. 06-01-09)

ORIGINAL SCALE IN INCHES FOR REDUCED PLANS 0 1 2 3

CU BATA011
EA 4G2801/4G2901

DISREGARD PRINTS BEARING EARLIER REVISION DATES

REVISION DATES (PRELIMINARY STAGE ONLY)

SHEET 39 OF 64

C:\Documents and Settings\reyesl\My Documents\SFOBB-Canopy-Arch_reyesl.rvt

6/26/2012 2:17:21 PM

DIST.	COUNTY	ROUTE	POST MILES TOTAL PROJECT	SHEET NO.	TOTAL SHEETS
04	Ala	80	2.0/2.3	59	83

REGISTERED ENGINEER — DATE 06/26/2012

PLANS APPROVAL DATE

REGISTERED PROFESSIONAL ENGINEER — MEE SHING OWYANG — No. 2246 — STRUCTURAL — STATE OF CALIFORNIA

The State of California or its officers or agents shall not be responsible for the accuracy or completeness of electronic copies of this plan sheet.

Parsons Brinckerhoff Inc.
303 Second Street, Suite 700N
San Francisco, CA 94107

Bay Area Toll Authority
101 Eight Street
Oakland, CA 94607

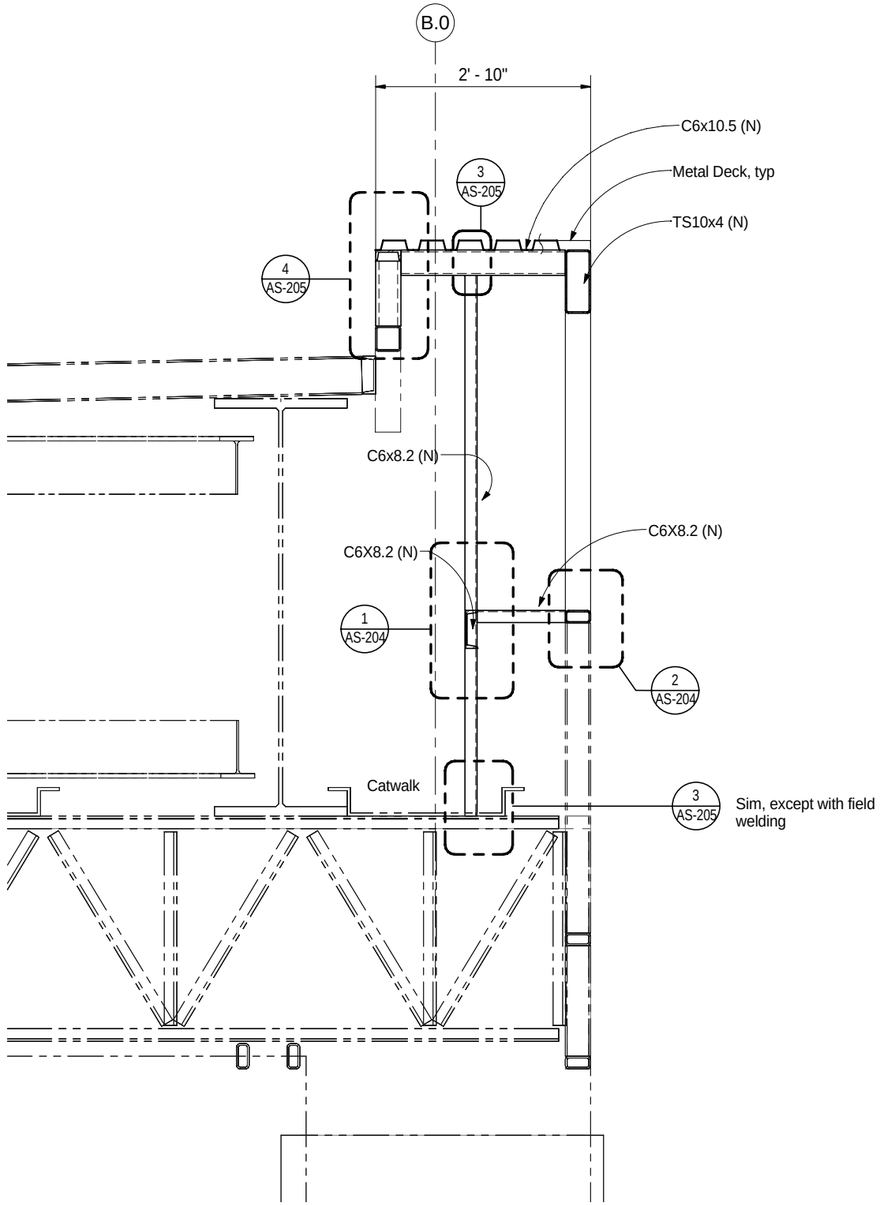

SECTION A AS-201 S-202
SCALE: 1" = 1'-0"

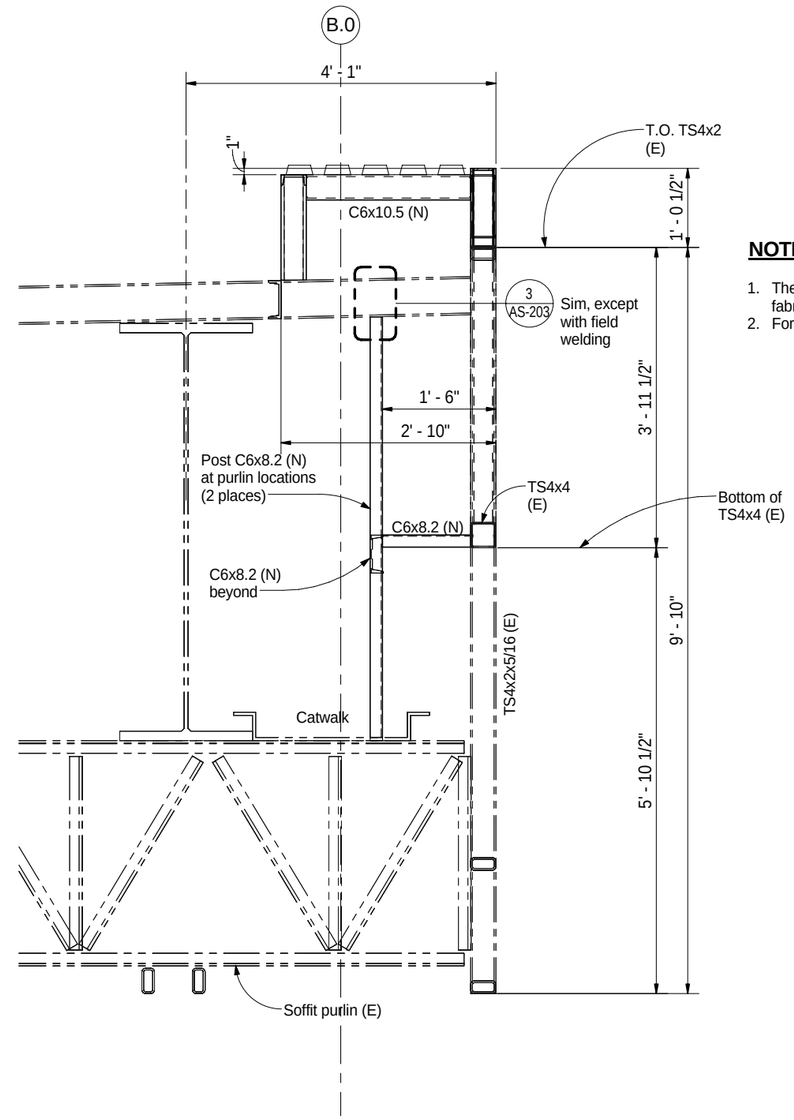

SECTION B AS-201 S-202
SCALE: 1" = 1'-0"

NOTES:

1. The Contractor shall verify in the field all controlling dimensions before ordering or fabricating any materials.
2. For general structural notes, see AS – 001.

AS-203

DESIGN	BY L. Guggemos	CHECKED M.S. Owyang	
DETAILS	BY L. Reyes	CHECKED M.S. Owyang	
QUANTITIES	BY	CHECKED	

PREPARED FOR THE STATE OF CALIFORNIA DEPARTMENT OF TRANSPORTATION

PROJECT ENGINEER

BRIDGE NO.

POST MILE

SFOBB TOLL PLAZA CANOPY RENOVATIONS

PARTIAL FRAMING PLANS

DESIGN GENERAL PLAN SHEET (ENGLISH) (REV. 06-01-09)

ORIGINAL SCALE IN INCHES FOR REDUCED PLANS 0 1 2 3

CU BATA011
EA 4G2801/4G2901

DISREGARD PRINTS BEARING EARLIER REVISION DATES

REVISION DATES (PRELIMINARY STAGE ONLY) -

SHEET 40 OF 64

C:\Documents and Settings\reyesl\My Documents\SFOBB-Canopy-Arch_reyesl.rvt

6/26/2012 2:17:22 PM

DIST.	COUNTY	ROUTE	POST MILES TOTAL PROJECT	SHEET NO.	TOTAL SHEETS
04	Ala	80	2.0/2.3	60	83

REGISTERED ENGINEER — DATE 06/26/2012

PLANS APPROVAL DATE

REGISTERED PROFESSIONAL ENGINEER — MEE SHING OWYANG — No. 2246 — STRUCTURAL — STATE OF CALIFORNIA

The State of California or its officers or agents shall not be responsible for the accuracy or completeness of electronic copies of this plan sheet.

Parsons Brinckerhoff Inc.
303 Second Street, Suite 700N
San Francisco, CA 94107

Bay Area Toll Authority
101 Eight Street
Oakland, CA 94607

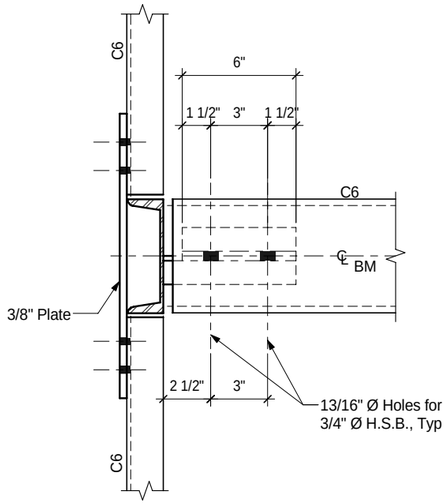

PLAN

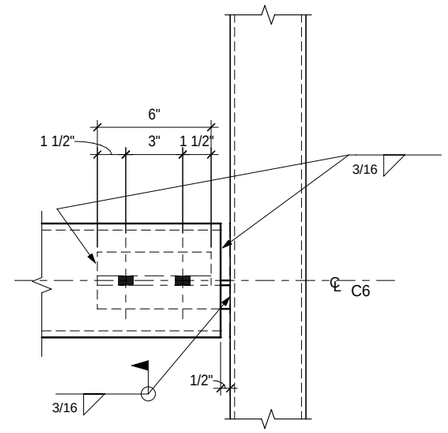

PLAN

NOTES:

1. The Contractor shall verify in the field all controlling dimensions before ordering or fabricating any materials.
2. For general structural notes, see AS – 001.

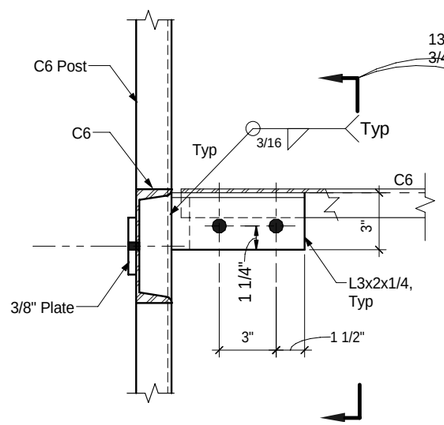

ELEVATION

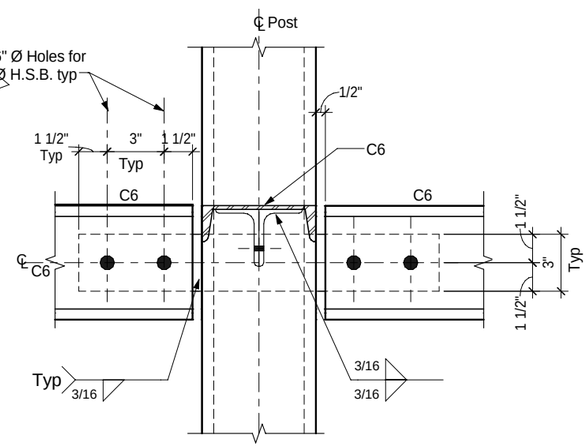

SECTION

DETAIL 1 AS-203
SCALE: 3" = 1'-0"

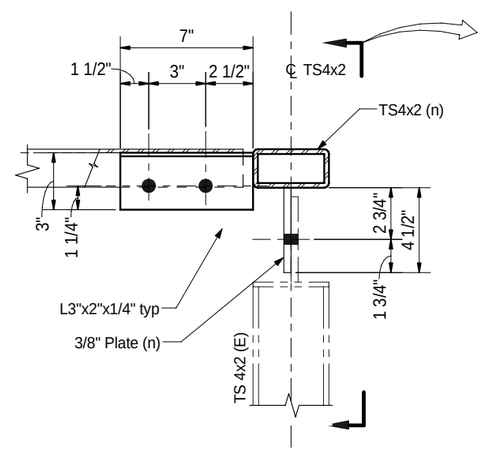

ELEVATION

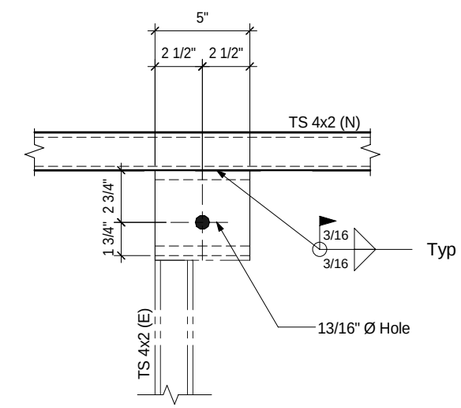

SECTION

DETAIL 2 AS-203
SCALE: 3" = 1'-0"

AS-204

DESIGN	BY L. Guggemos	CHECKED M.S. Owyang	
DETAILS	BY O. Kurnovskaya	CHECKED M.S. Owyang	
QUANTITIES	BY	CHECKED	

PREPARED FOR THE STATE OF CALIFORNIA DEPARTMENT OF TRANSPORTATION

PROJECT ENGINEER

BRIDGE NO.

POST MILE

SFOBB TOLL PLAZA CANOPY RENOVATIONS

DETAILS No. 1

DESIGN GENERAL PLAN SHEET (ENGLISH) (REV. 06-01-09)

ORIGINAL SCALE IN INCHES FOR REDUCED PLANS 0 1 2 3

CU BATA011
EA 4G2801/4G2901

DISREGARD PRINTS BEARING EARLIER REVISION DATES

REVISION DATES (PRELIMINARY STAGE ONLY)

SHEET 41 OF 64

C:\Documents and Settings\reyesl\My Documents\SFOBB-Canopy-Arch_reyesl.rvt

6/26/2012 2:17:24 PM

DIST.	COUNTY	ROUTE	POST MILES TOTAL PROJECT	SHEET NO.	TOTAL SHEETS
04	Ala	80	2.0/2.3	61	83

REGISTERED ENGINEER — DATE 06/26/2012

PLANS APPROVAL DATE

REGISTERED PROFESSIONAL ENGINEER — MEE SHING OWYANG — No. 2246 — STRUCTURAL — STATE OF CALIFORNIA

The State of California or its officers or agents shall not be responsible for the accuracy or completeness of electronic copies of this plan sheet.

Parsons Brinckerhoff Inc.
303 Second Street, Suite 700N
San Francisco, CA 94107

Bay Area Toll Authority
101 Eight Street
Oakland, CA 94607

NOTES:

1. The Contractor shall verify in the field all controlling dimensions before ordering or fabricating any materials.
2. For general structural notes, see AS – 001.

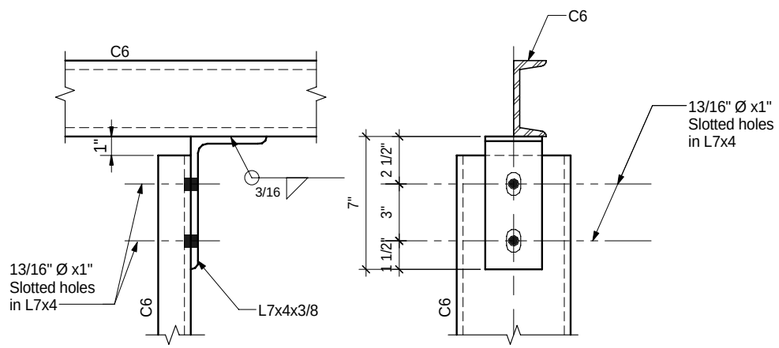

ELEVATION ELEVATION

DETAIL 3 / AS-203
SCALE: 3" = 1'-0"

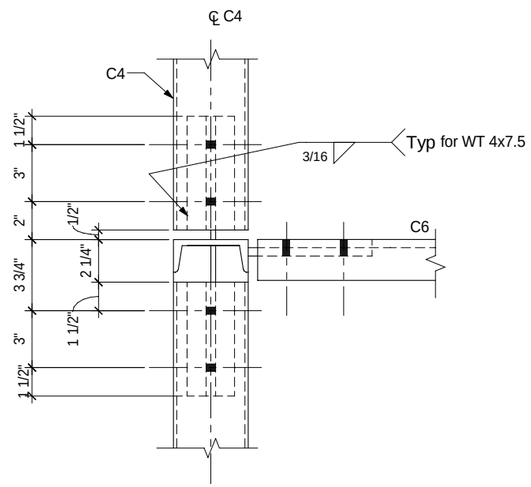

PLAN

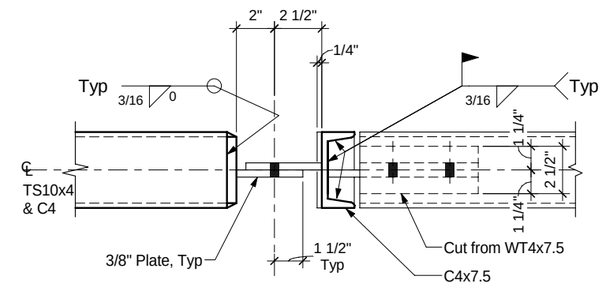

PLAN

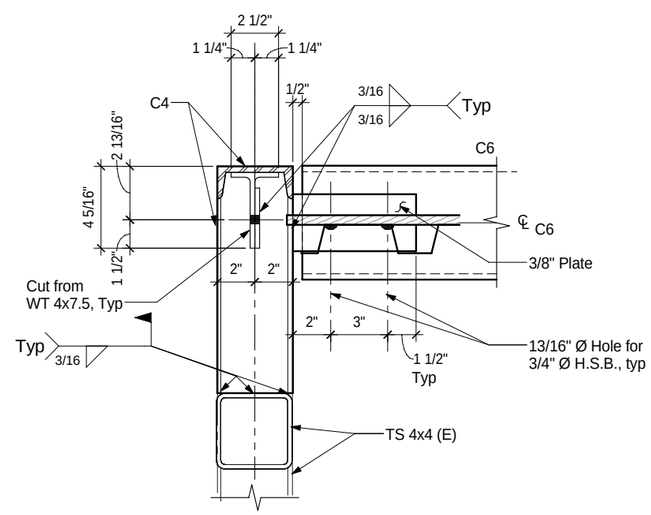

ELEVATION

DETAIL 4
SCALE: 3" = 1'-0"

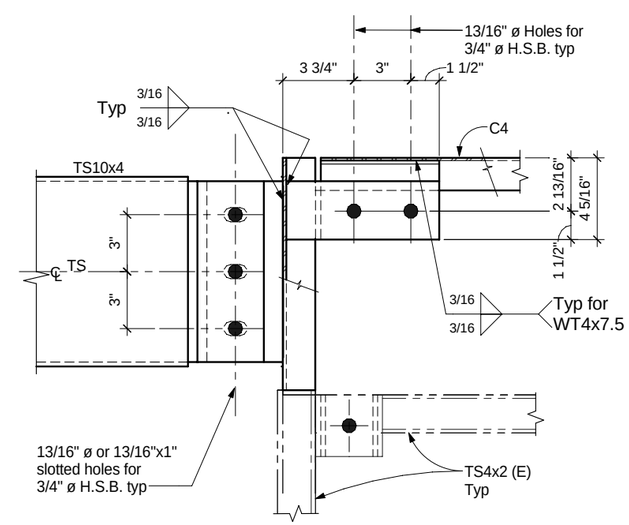

ELEVATION

DETAIL 5 / AS-201
SCALE: 3" = 1'-0"

AS-205

DESIGN	BY L. Guggemos	CHECKED M.S. Owyang	
DETAILS	BY O. Kurnovskaya	CHECKED M.S. Owyang	
QUANTITIES	BY	CHECKED	

PREPARED FOR THE
STATE OF CALIFORNIA
DEPARTMENT OF TRANSPORTATION

PROJECT ENGINEER

BRIDGE NO.

POST MILE

SFOBB TOLL PLAZA CANOPY RENOVATIONS

DETAILS No. 2

DESIGN GENERAL PLAN SHEET (ENGLISH) (REV. 06-01-09)

ORIGINAL SCALE IN INCHES FOR REDUCED PLANS 0 1 2 3

CU BATA011
EA 4G2801/4G2901

DISREGARD PRINTS BEARING EARLIER REVISION DATES

REVISION DATES (PRELIMINARY STAGE ONLY)

SHEET 42 OF 64

C:\Documents and Settings\reyesl\My Documents\SFOBB-Canopy-Arch_reyesl.rvt

6/26/2012 2:17:25 PM

DIST.	COUNTY	ROUTE	POST MILES TOTAL PROJECT	SHEET NO.	TOTAL SHEETS
04	Ala	80	2.0/2.3	62	83

REGISTERED ENGINEER — DATE 06/26/2012

PLANS APPROVAL DATE

REGISTERED PROFESSIONAL ENGINEER — MEE SHING OWYANG — No. 2246 — STRUCTURAL — STATE OF CALIFORNIA

The State of California or its officers or agents shall not be responsible for the accuracy or completeness of electronic copies of this plan sheet.

Parsons Brinckerhoff Inc.
303 Second Street, Suite 700N
San Francisco, CA 94107

Bay Area Toll Authority
101 Eight Street
Oakland, CA 94607

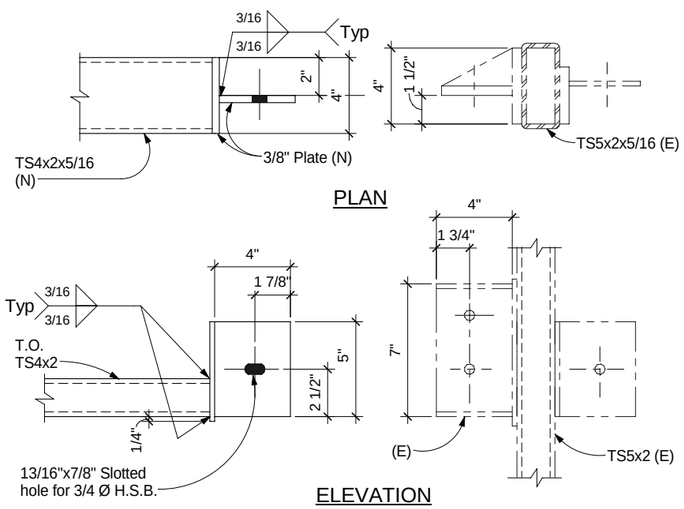

DETAIL 6 AS-201
SCALE: 3" = 1'-0"
AS-202

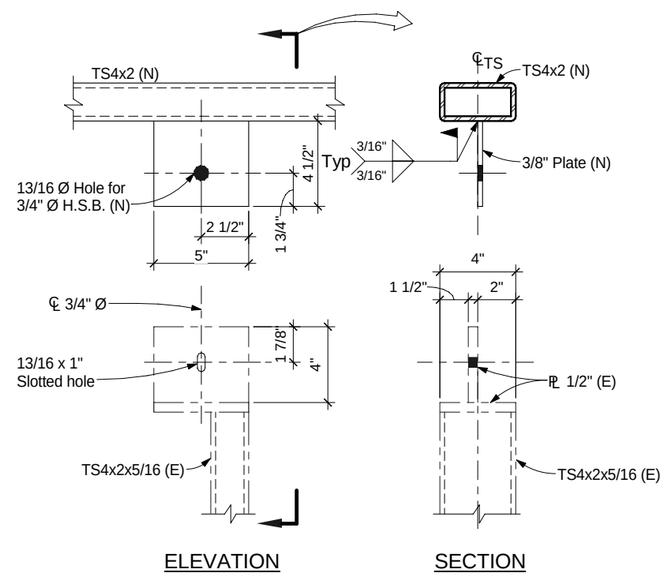

DETAIL 7 AS-201
SCALE: 3" = 1'-0"
AS-202

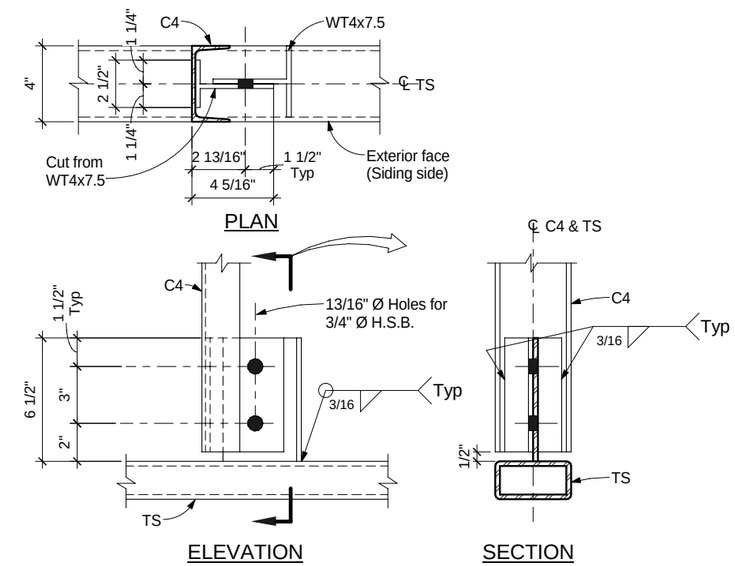

DETAIL 8 AS-201
SCALE: 3" = 1'-0"
AS-202

NOTES:

1. The Contractor shall verify in the field all controlling dimensions before ordering or fabricating any materials.
2. For general structural notes, see AS – 001.

AS-206

DESIGN	BY L. Guggemos	CHECKED M.S. Owyang	
DETAILS	BY O. Kurnovskaya	CHECKED M.S. Owyang	
QUANTITIES	BY	CHECKED	

PREPARED FOR THE STATE OF CALIFORNIA DEPARTMENT OF TRANSPORTATION

PROJECT ENGINEER

BRIDGE NO.

POST MILE

SFOBB TOLL PLAZA CANOPY RENOVATIONS

DETAILS No. 3

DESIGN GENERAL PLAN SHEET (ENGLISH) (REV. 06-01-09)

ORIGINAL SCALE IN INCHES FOR REDUCED PLANS 0 1 2 3

CU BATA011
EA 4G2801/4G2901

DISREGARD PRINTS BEARING EARLIER REVISION DATES

REVISION DATES (PRELIMINARY STAGE ONLY)

SHEET 43 OF 64

C:\Documents and Settings\reyesl\My Documents\SFOBB-Canopy-Arch_reyesl.rvt

6/26/2012 2:17:26 PM

DIST.	COUNTY	ROUTE	POST MILES TOTAL PROJECT	SHEET NO.	TOTAL SHEETS
04	Ala	80	2.0/2.3	63	83

REGISTERED ENGINEER — DATE 06/26/2012

PLANS APPROVAL DATE

REGISTERED PROFESSIONAL ENGINEER — MEE SHING OWYANG — No. 2246 — STRUCTURAL — STATE OF CALIFORNIA

The State of California or its officers or agents shall not be responsible for the accuracy or completeness of electronic copies of this plan sheet.

Parsons Brinckerhoff Inc.
303 Second Street, Suite 700N
San Francisco, CA 94107

Bay Area Toll Authority
101 Eight Street
Oakland, CA 94607

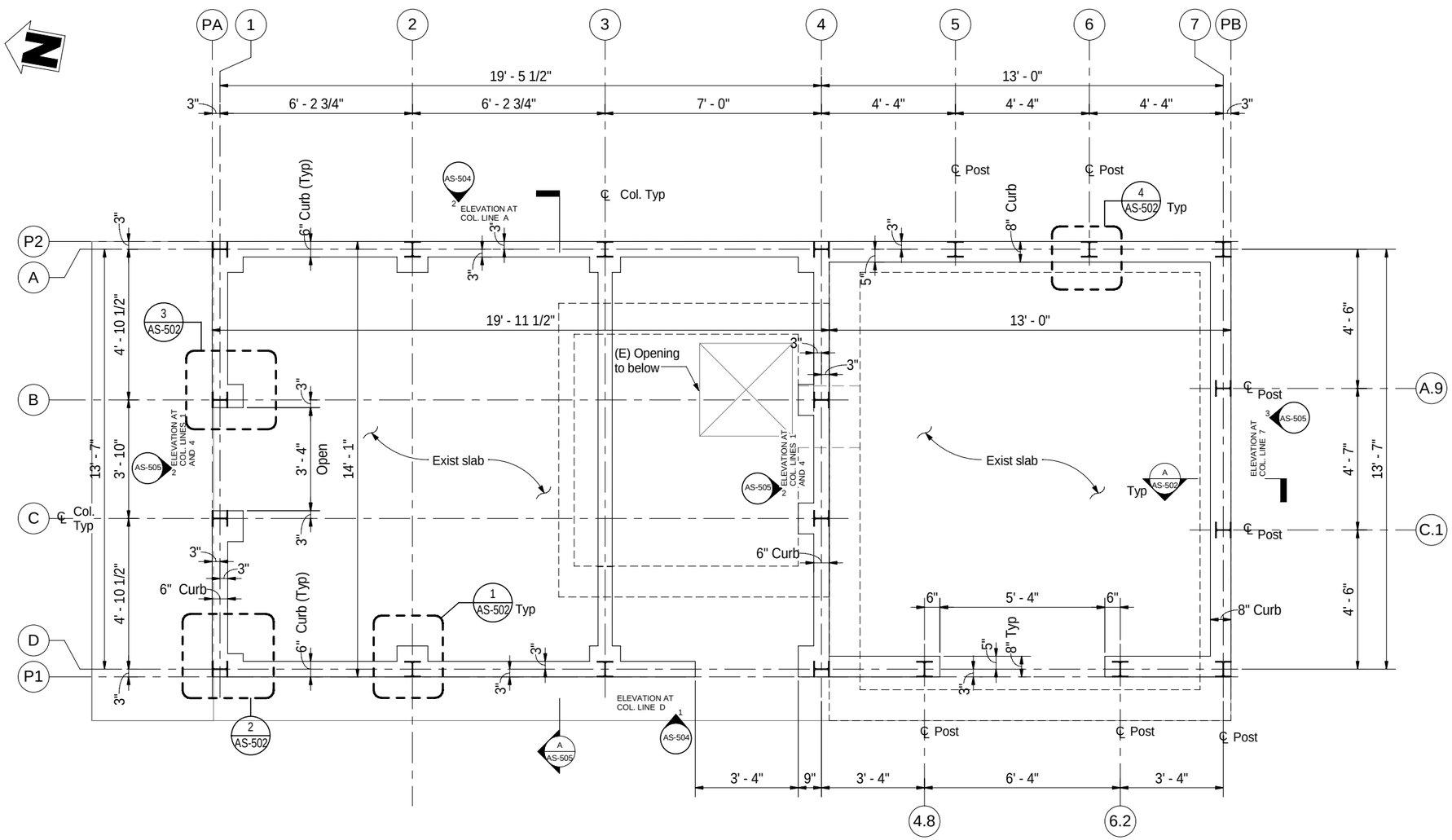

NOTES:

1. The Contractor shall verify in the field all controlling dimensions before ordering or fabricating any materials.
2. For general structural notes, see AS – 001.

FOUNDATION PLAN

SCALE: 1/2" = 1'-0"

AS-501

DESIGN	BY L. Guggemos	CHECKED M.S. Owyang	
DETAILS	BY L. Reyes	CHECKED M.S. Owyang	
QUANTITIES	BY	CHECKED	

PREPARED FOR THE STATE OF CALIFORNIA DEPARTMENT OF TRANSPORTATION

PROJECT ENGINEER

BRIDGE NO.

POST MILE

SFOBB TOLL PLAZA CANOPY RENOVATIONS

PUMP STATION - FOUNDATION PLAN

DESIGN GENERAL PLAN SHEET (ENGLISH) (REV. 06-01-09)

ORIGINAL SCALE IN INCHES FOR REDUCED PLANS 0 1 2 3

CU BATA011
EA 4G2801/4G2901

DISREGARD PRINTS BEARING EARLIER REVISION DATES

REVISION DATES (PRELIMINARY STAGE ONLY)

SHEET 44 OF 64

C:\Documents and Settings\reyesl\My Documents\SFOBB-Canopy-Arch_reyesl.rvt

6/26/2012 2:38:08 PM

DIST.	COUNTY	ROUTE	POST MILES TOTAL PROJECT	SHEET NO.	TOTAL SHEETS
04	Ala	80	2.0/2.3	64	83

REGISTERED ENGINEER — DATE 06/26/2012

PLANS APPROVAL DATE

REGISTERED PROFESSIONAL ENGINEER — MEE SHING OWYANG — No. 2246 — STRUCTURAL — STATE OF CALIFORNIA

The State of California or its officers or agents shall not be responsible for the accuracy or completeness of electronic copies of this plan sheet.

Parsons Brinckerhoff Inc.
303 Second Street, Suite 700N
San Francisco, CA 94107

Bay Area Toll Authority
101 Eight Street
Oakland, CA 94607

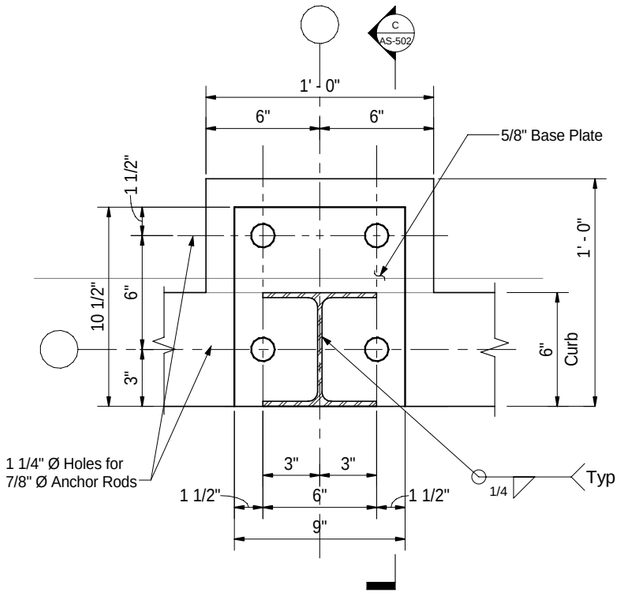

FOR COL. 2-A, 2-D, 3-A, 3-D, 4-B & 4-C

DETAIL 1 / AS-501
SCALE: 3" = 1'-0"

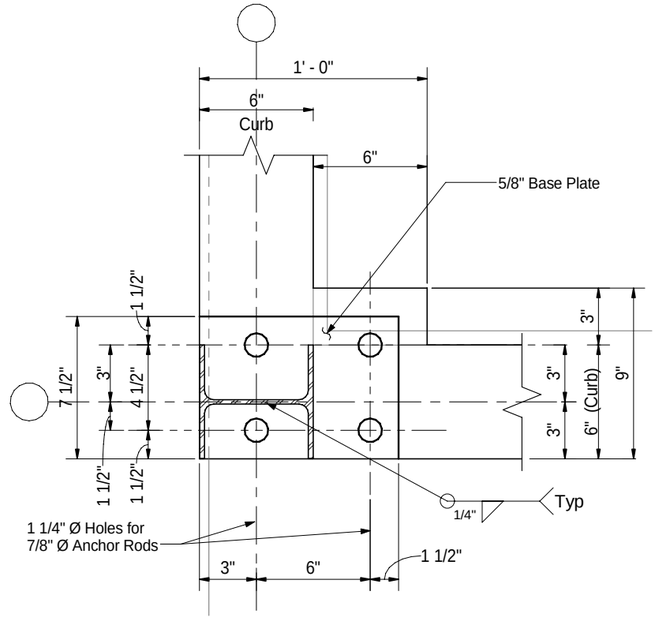

FOR COL. 1-D, 1-A, 4-A & 4-D

DETAIL 2 / AS-501
SCALE: 3" = 1'-0"

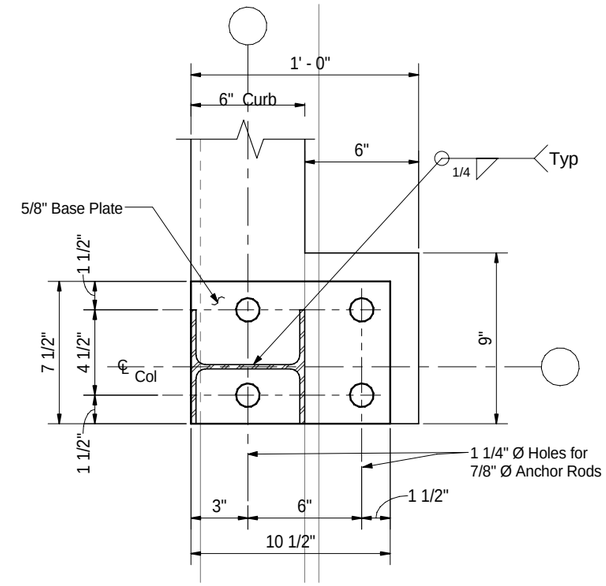

FOR COL. 1-B & 1-C

DETAIL 3 / AS-501
SCALE: 3" = 1'-0"

NOTES:

1. The Contractor shall verify in the field all controlling dimensions before ordering or fabricating any materials.
2. For general structural notes, see AS – 001.
3. For orientation of columns, see AS-501, Foundation Plan.

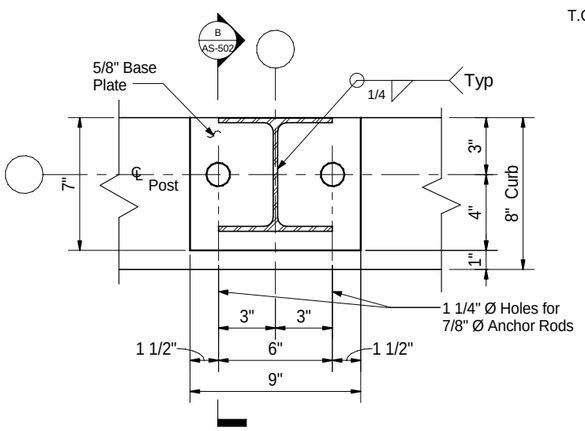

FOR POSTS @ GRID LINE 4.8 TO 7

DETAIL 4 / AS-501
SCALE: 3" = 1'-0"

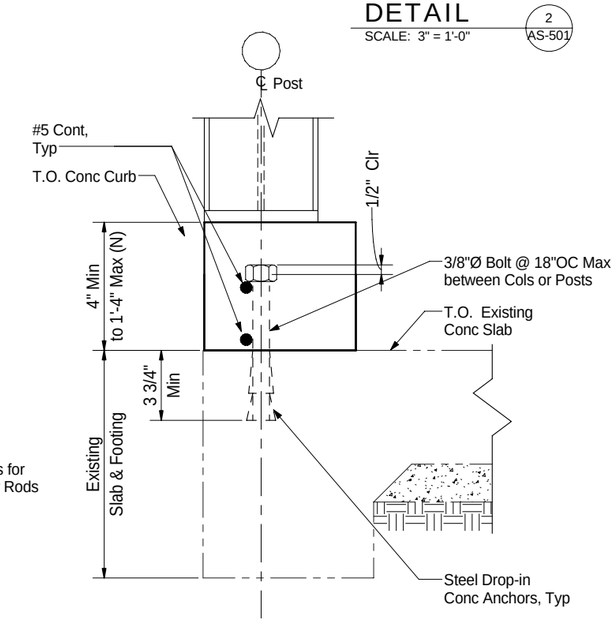

TYP. CONC. CURB TO SLAB CONNECTION

SECTION A / AS-501
SCALE: 3" = 1'-0"

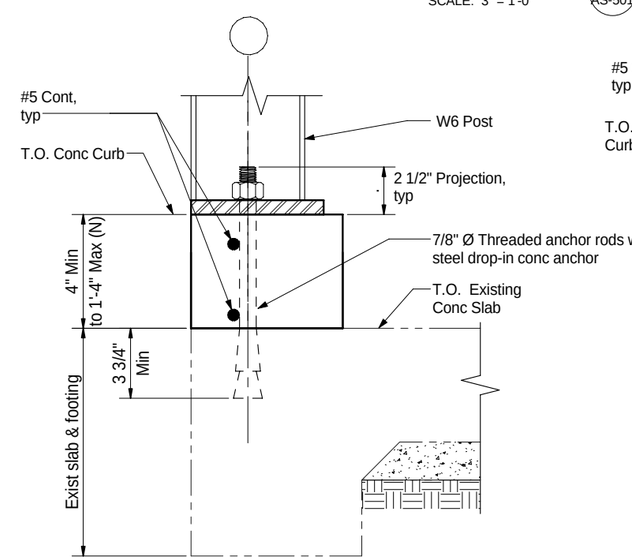

SECTION B / AS-502
SCALE: 3" = 1'-0"

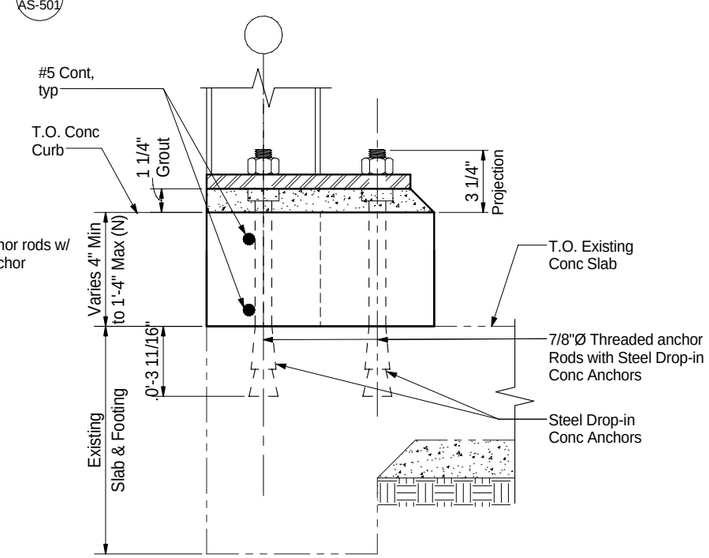

SECTION C / AS-502
SCALE: 3" = 1'-0"

AS-502

	BY	CHECKED
DESIGN	L. Guggemos	M.S. Owyang
DETAILS	O. Kurnovskaya	M.S. Owyang
QUANTITIES		

PREPARED FOR THE STATE OF CALIFORNIA DEPARTMENT OF TRANSPORTATION

PROJECT ENGINEER

BRIDGE NO.

POST MILE

SFOBB TOLL PLAZA CANOPY RENOVATIONS
PUMP STATION - FOUNDATION DETAILS

DESIGN GENERAL PLAN SHEET (ENGLISH) (REV. 06-01-09)

ORIGINAL SCALE IN INCHES FOR REDUCED PLANS 0 1 2 3

CU BATA011
EA 4G2801/4G2901

DISREGARD PRINTS BEARING EARLIER REVISION DATES

REVISION DATES (PRELIMINARY STAGE ONLY)

SHEET 45 OF 64

C:\Documents and Settings\reyesl\My Documents\SFOBB-Canopy-Arch_reyesl.rvt

6/26/2012 2:17:36 PM

DIST.	COUNTY	ROUTE	POST MILES TOTAL PROJECT	SHEET NO.	TOTAL SHEETS
04	Ala	80	2.0/2.3	65	83

REGISTERED ENGINEER — DATE 06/26/2012

PLANS APPROVAL DATE

REGISTERED PROFESSIONAL ENGINEER — MEE SHING OWYANG — No. 2246 — STRUCTURAL — STATE OF CALIFORNIA

The State of California or its officers or agents shall not be responsible for the accuracy or completeness of electronic copies of this plan sheet.

Parsons Brinckerhoff Inc.
303 Second Street, Suite 700N
San Francisco, CA 94107

Bay Area Toll Authority
101 Eight Street
Oakland, CA 94607

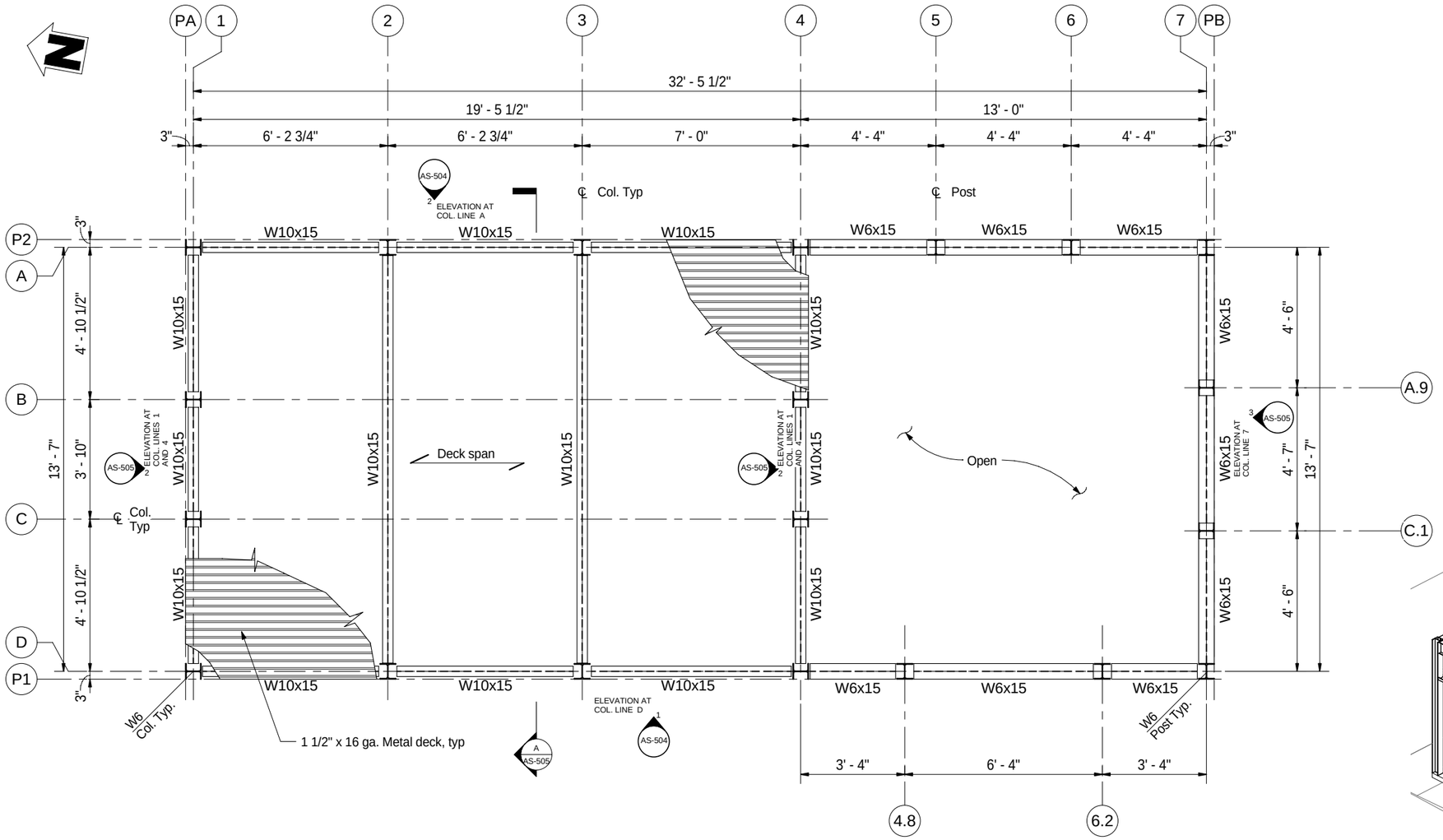

ROOF FRAMING PLAN

SCALE: 1/2" = 1'-0"

NOTES:

1. The Contractor shall verify in the field all controlling dimensions before ordering or fabricating any materials.
2. For general structural notes, see AS – 001.

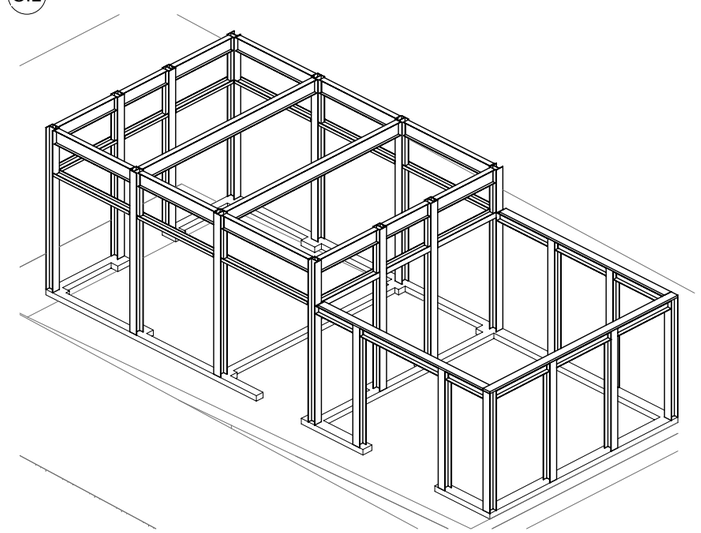

ISOMETRIC VIEW

SCALE:

AS-503

DESIGN	BY L. Guggemos	CHECKED M.S. Owyang	
DETAILS	BY O. Kurnovskaya	CHECKED M.S. Owyang	
QUANTITIES	BY	CHECKED	

PREPARED FOR THE STATE OF CALIFORNIA DEPARTMENT OF TRANSPORTATION

PROJECT ENGINEER

BRIDGE NO.

POST MILE

SFOBB TOLL PLAZA CANOPY RENOVATIONS

PUMP STATION - ROOF FRAMING PLAN

DESIGN GENERAL PLAN SHEET (ENGLISH) (REV. 06-01-09)

ORIGINAL SCALE IN INCHES FOR REDUCED PLANS 0 1 2 3

CU BATA011
EA 4G2801/4G2901

DISREGARD PRINTS BEARING EARLIER REVISION DATES

REVISION DATES (PRELIMINARY STAGE ONLY)

SHEET 46 OF 64

C:\Documents and Settings\reyesl\My Documents\SFOBB-Canopy-Arch_reyesl.rvt

6/26/2012 4:30:04 PM

DIST.	COUNTY	ROUTE	POST MILES TOTAL PROJECT	SHEET NO.	TOTAL SHEETS
04	Ala	80	2.0/2.3	66	83

REGISTERED ENGINEER — DATE 06/26/2012

PLANS APPROVAL DATE

REGISTERED PROFESSIONAL ENGINEER — MEE SHING OWYANG — No. 2246 — STRUCTURAL — STATE OF CALIFORNIA

The State of California or its officers or agents shall not be responsible for the accuracy or completeness of electronic copies of this plan sheet.

Parsons Brinckerhoff Inc.
303 Second Street, Suite 700N
San Francisco, CA 94107

Bay Area Toll Authority
101 Eight Street
Oakland, CA 94607

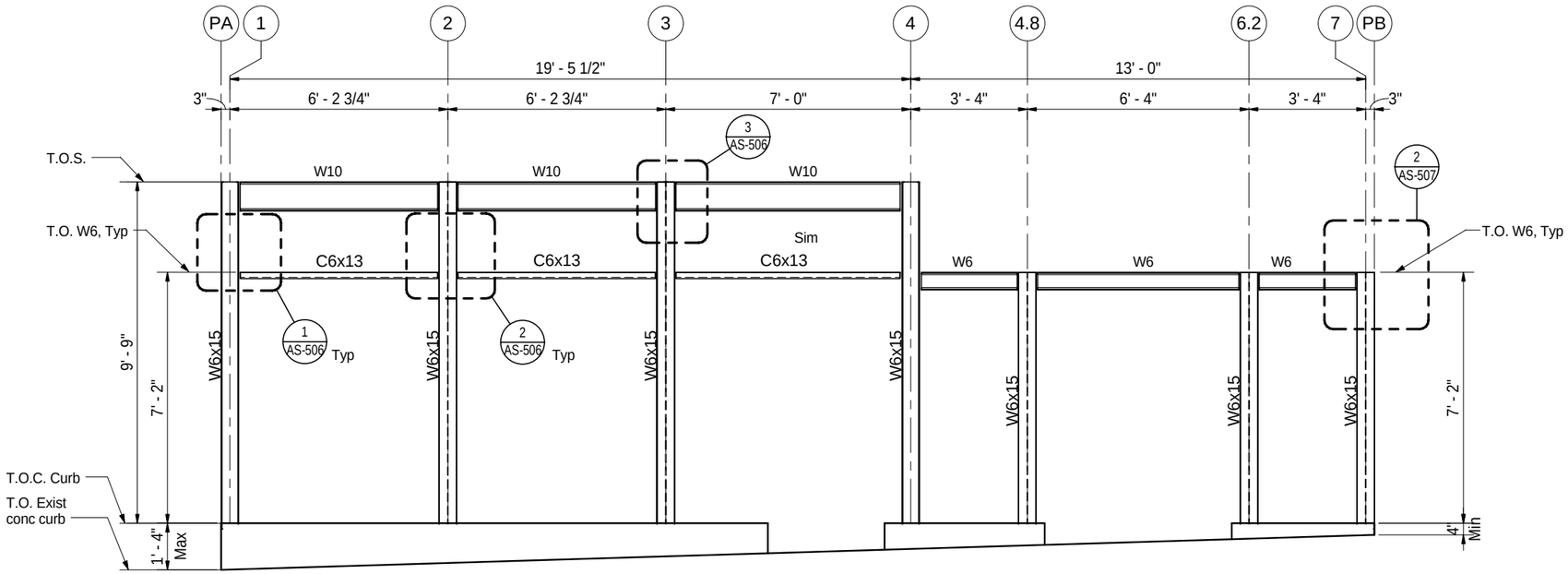

ELEVATION AT COL. LINE D

SCALE: 1/2" = 1'-0"

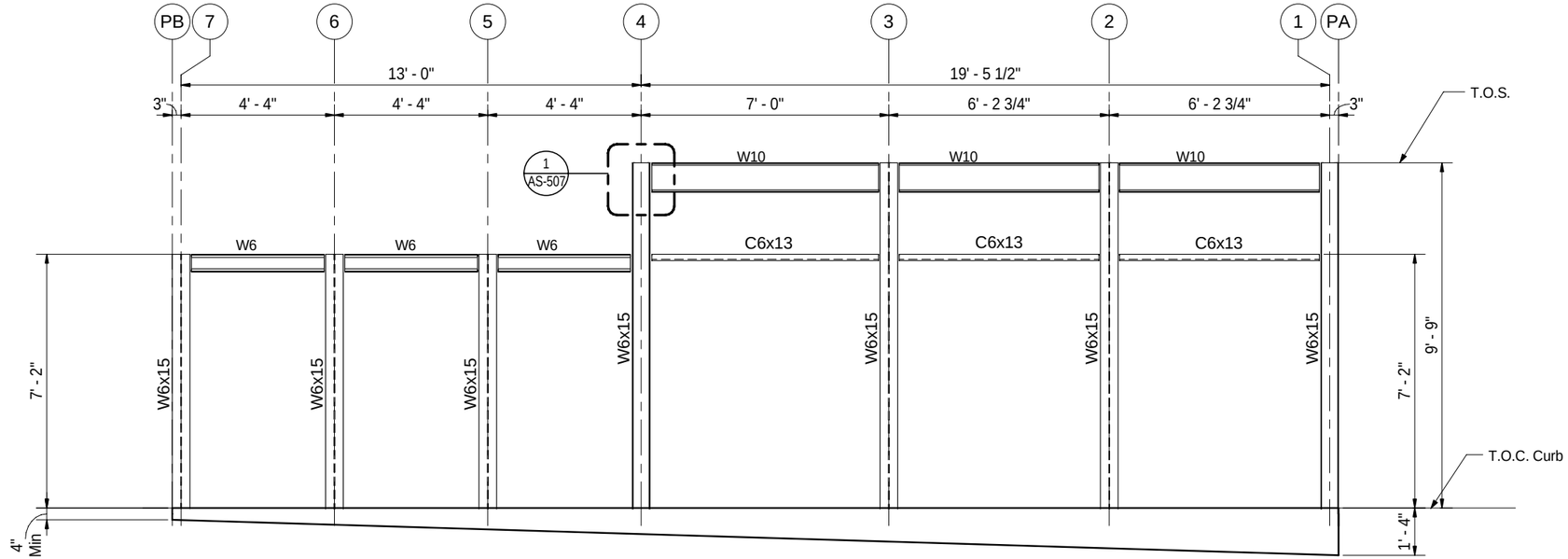

ELEVATION AT COL. LINE A

SCALE: 1/2" = 1'-0"

NOTES:

1. The Contractor shall verify in the field all controlling dimensions before ordering or fabricating any materials.
2. For general structural notes, see AS – 001.

AS-504

DESIGN	BY L. Guggemos	CHECKED M.S. Owyang	
DETAILS	BY L. Reyes	CHECKED M.S. Owyang	
QUANTITIES	BY	CHECKED	

PREPARED FOR THE STATE OF CALIFORNIA DEPARTMENT OF TRANSPORTATION

PROJECT ENGINEER

BRIDGE NO.

POST MILE

SFOBB TOLL PLAZA CANOPY RENOVATIONS

PUMP STATION - ELEVATIONS

DESIGN GENERAL PLAN SHEET (ENGLISH) (REV. 06-01-09)

ORIGINAL SCALE IN INCHES FOR REDUCED PLANS 0 1 2 3

CU BATA011
EA 4G2801/4G2901

DISREGARD PRINTS BEARING EARLIER REVISION DATES

REVISION DATES (PRELIMINARY STAGE ONLY)

SHEET 47 OF 64

C:\Documents and Settings\reyesl\My Documents\SFOBB-Canopy-Arch_reyesl.rvt

6/26/2012 4:24:56 PM

DIST.	COUNTY	ROUTE	POST MILES TOTAL PROJECT	SHEET NO.	TOTAL SHEETS
04	Ala	80	2.0/2.3	67	83

REGISTERED ENGINEER 06/26/2012 DATE

PLANS APPROVAL DATE

REGISTERED PROFESSIONAL ENGINEER MEE SHING OWYANG No. 2246 STRUCTURAL STATE OF CALIFORNIA

The State of California or its officers or agents shall not be responsible for the accuracy or completeness of electronic copies of this plan sheet.

Parsons Brinckerhoff Inc.
303 Second Street, Suite 700N
San Francisco, CA 94107

Bay Area Toll Authority
101 Eight Street
Oakland, CA 94607

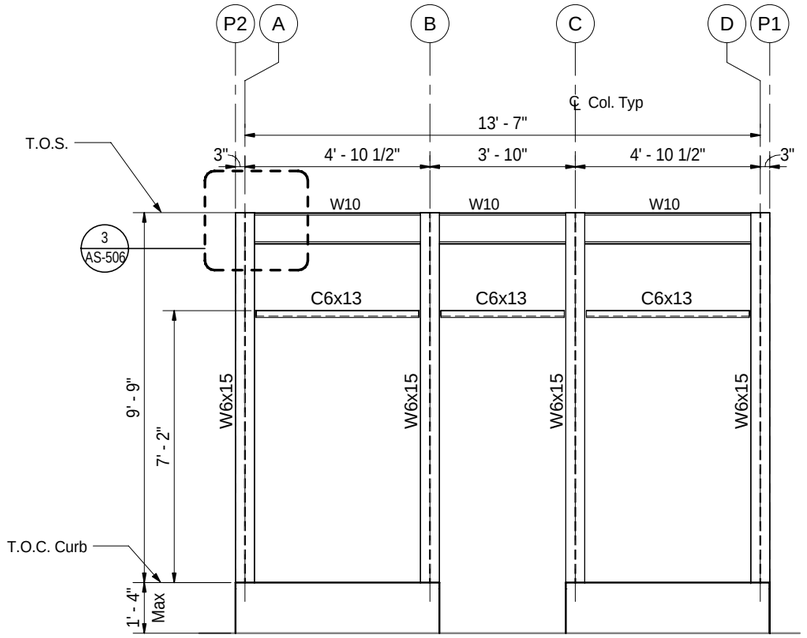

ELEVATION AT COL. LINES 1 AND 4

SCALE: 1/2" = 1'-0"

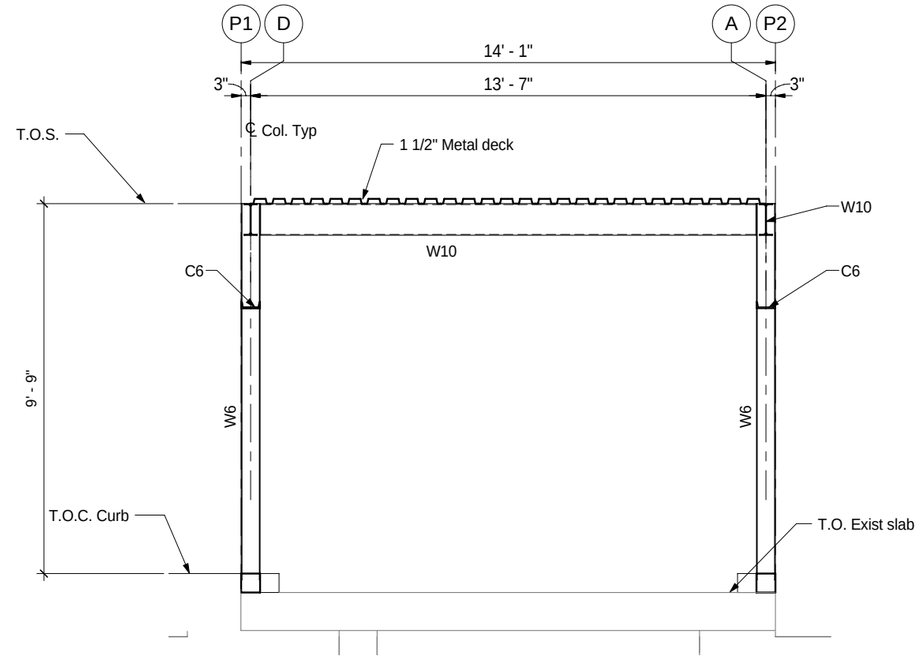

SECTION A-A

SCALE: 1/2" = 1' - 0"

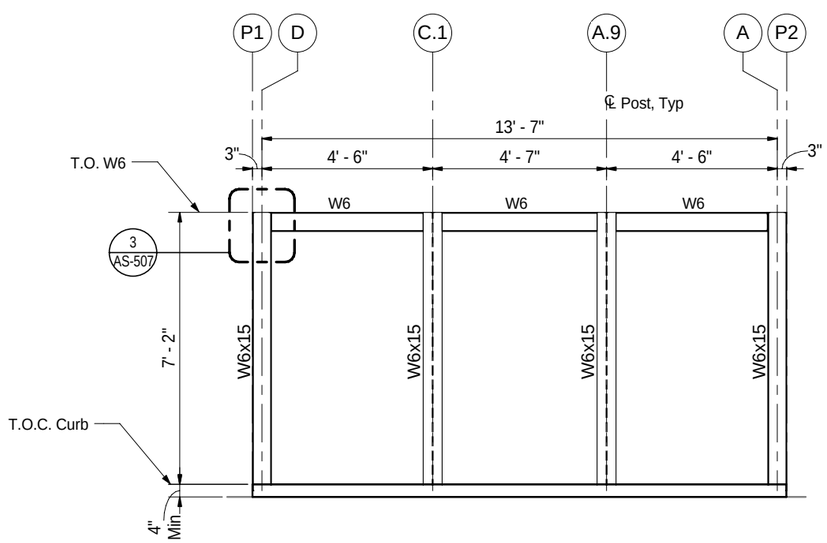

ELEVATION AT COL. LINE 7

SCALE: 1/2" = 1'-0"

NOTES:

1. The Contractor shall verify in the field all controlling dimensions before ordering or fabricating any materials.
2. For general structural notes, see AS – 001.

AS-505

DESIGN	BY L. Guggemos	CHECKED M.S. Owyang	
DETAILS	BY L. Reyes	CHECKED M.S. Owyang	
QUANTITIES	BY	CHECKED	

PREPARED FOR THE STATE OF CALIFORNIA DEPARTMENT OF TRANSPORTATION

PROJECT ENGINEER

BRIDGE NO.

POST MILE

SFOBB TOLL PLAZA CANOPY RENOVATIONS

PUMP STATION - ELEVATIONS

DESIGN GENERAL PLAN SHEET (ENGLISH) (REV. 06-01-09)

ORIGINAL SCALE IN INCHES FOR REDUCED PLANS 0 1 2 3

CU BATA011
EA 4G2801/4G2901

DISREGARD PRINTS BEARING EARLIER REVISION DATES

REVISION DATES (PRELIMINARY STAGE ONLY)

SHEET 48 OF 64

C:\Documents and Settings\reyesl\My Documents\SFOBB-Canopy-Arch_reyesl.rvt

6/26/2012 2:17:38 PM

DIST.	COUNTY	ROUTE	POST MILES TOTAL PROJECT	SHEET NO.	TOTAL SHEETS
04	Ala	80	2.0/2.3	68	83

REGISTERED ENGINEER — DATE 06/26/2012

REGISTERED PROFESSIONAL ENGINEER — MEE SHING OWYANG — No. 2246 — STRUCTURAL — STATE OF CALIFORNIA

PLANS APPROVAL DATE

The State of California or its officers or agents shall not be responsible for the accuracy or completeness of electronic copies of this plan sheet.

Parsons Brinckerhoff Inc.
303 Second Street, Suite 700N
San Francisco, CA 94107

Bay Area Toll Authority
101 Eight Street
Oakland, CA 94607

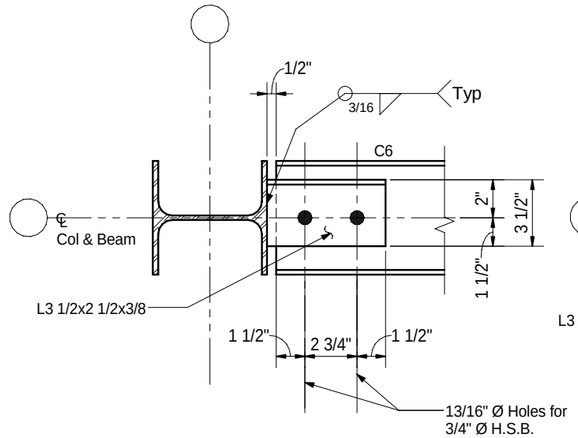

PLAN

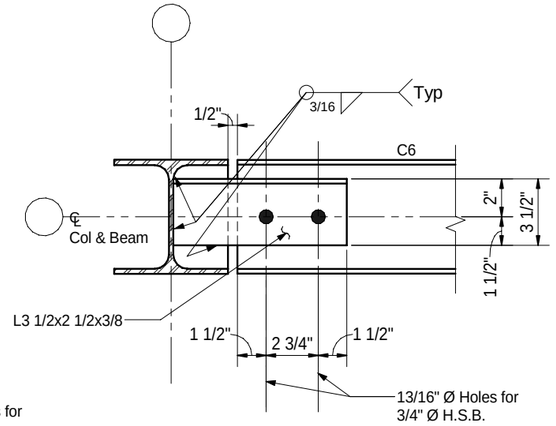

PLAN

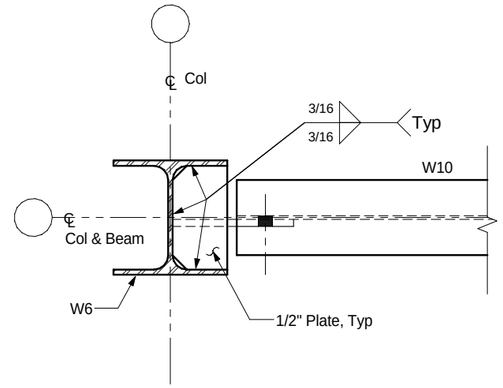

PLAN

NOTES:

1. The Contractor shall verify in the field all controlling dimensions before ordering or fabricating any materials.
2. For general structural notes, see AS – 001.

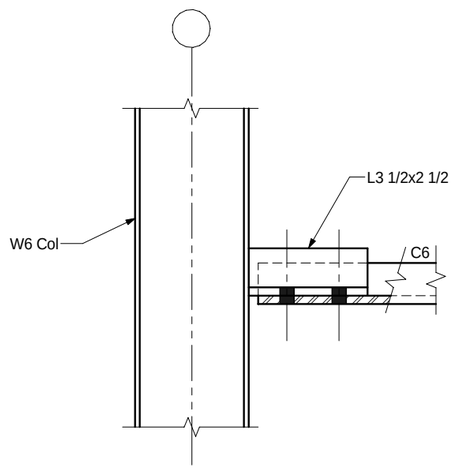

ELEVATION

TYP C6 TO COLUMN FLANGE CONNECTION

DETAIL 1 AS-504
SCALE: 3" = 1'-0"

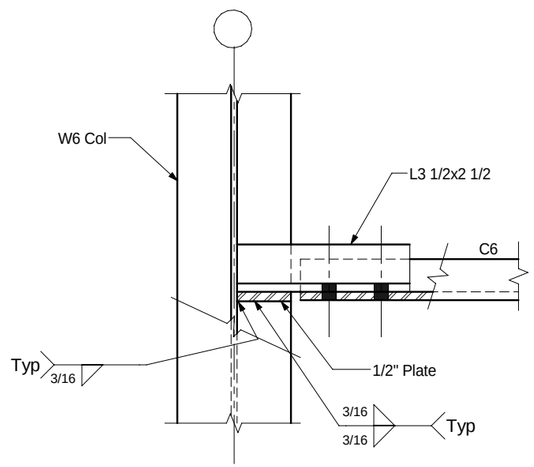

ELEVATION

TYP C6 TO COLUMN WEB CONNECTION

DETAIL 2 AS-504
SCALE: 3" = 1'-0"

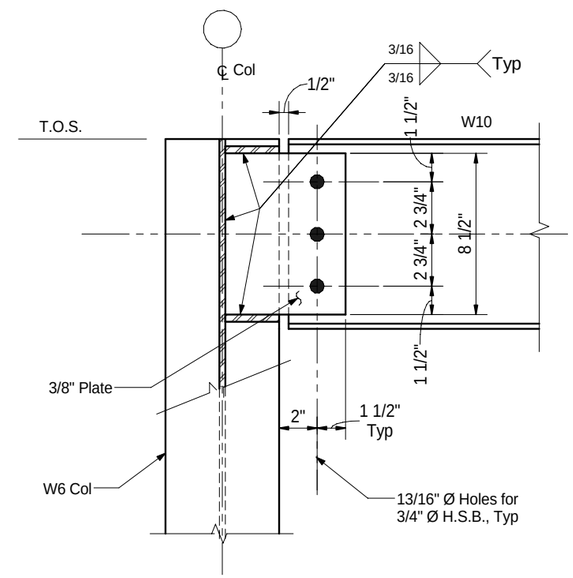

ELEVATION

TYP W10 TO COLUMN WEB CONNECTION

DETAIL 3 AS-504
SCALE: 3" = 1'-0"

AS-506

DESIGN	BY L. Guggemos	CHECKED M.S. Owyang	
DETAILS	BY O. Kurnovskaya	CHECKED M.S. Owyang	
QUANTITIES	BY	CHECKED	

PREPARED FOR THE STATE OF CALIFORNIA DEPARTMENT OF TRANSPORTATION

PROJECT ENGINEER

BRIDGE NO.

POST MILE

SFOBB TOLL PLAZA CANOPY RENOVATIONS

PUMP STATION - FRAMING DETAILS NO. 1

DESIGN GENERAL PLAN SHEET (ENGLISH) (REV. 06-01-09)

ORIGINAL SCALE IN INCHES FOR REDUCED PLANS 0 1 2 3

CU BATA011
EA 4G2801/4G2901

DISREGARD PRINTS BEARING EARLIER REVISION DATES

REVISION DATES (PRELIMINARY STAGE ONLY)

SHEET 49 OF 64

C:\Documents and Settings\reyesl\My Documents\SFOBB-Canopy-Arch_reyesl.rvt

6/26/2012 2:17:46 PM

DIST.	COUNTY	ROUTE	POST MILES TOTAL PROJECT	SHEET NO.	TOTAL SHEETS
04	Ala	80	2.0/2.3	69	83

REGISTERED ENGINEER — DATE 06/26/2012

PLANS APPROVAL DATE

REGISTERED PROFESSIONAL ENGINEER — MEE SHING OWYANG — No. 2246 — STRUCTURAL — STATE OF CALIFORNIA

The State of California or its officers or agents shall not be responsible for the accuracy or completeness of electronic copies of this plan sheet.

Parsons Brinckerhoff Inc.
303 Second Street, Suite 700N
San Francisco, CA 94107

Bay Area Toll Authority
101 Eight Street
Oakland, CA 94607

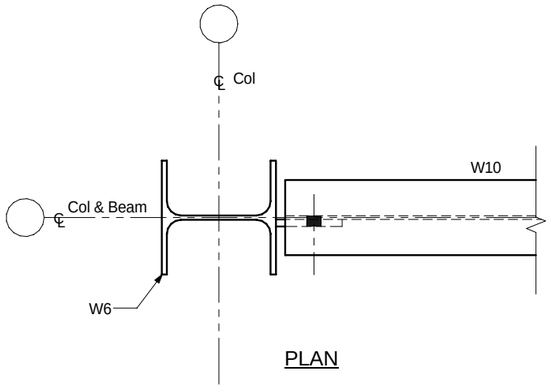

PLAN

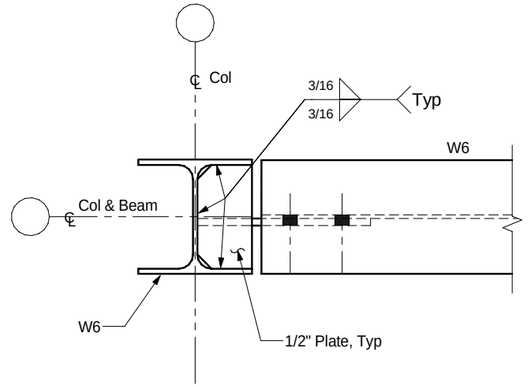

PLAN

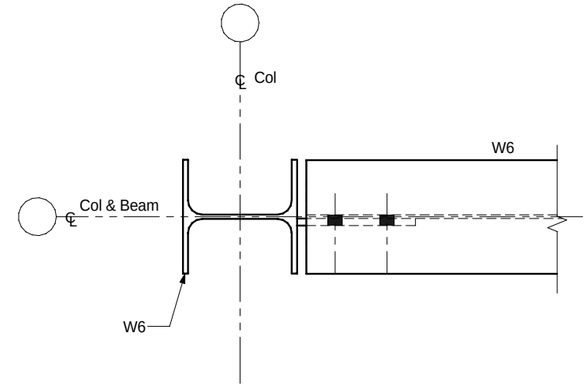

PLAN

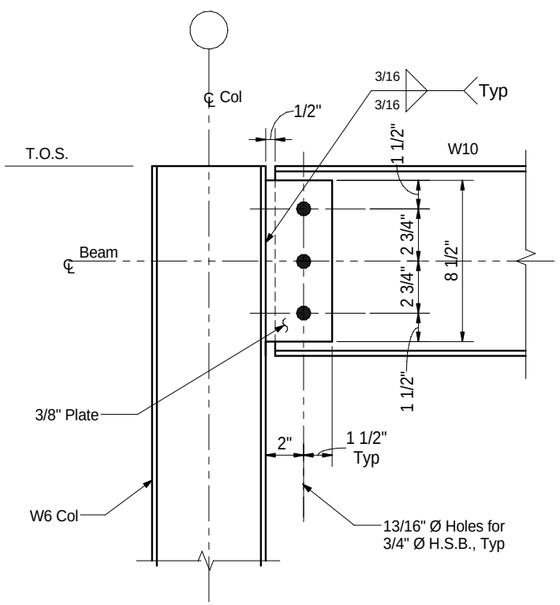

ELEVATION

TYP W10 TO COLUMN FLANGE CONNECTION

DETAIL 1 / AS-504

SCALE: 3" = 1'-0"

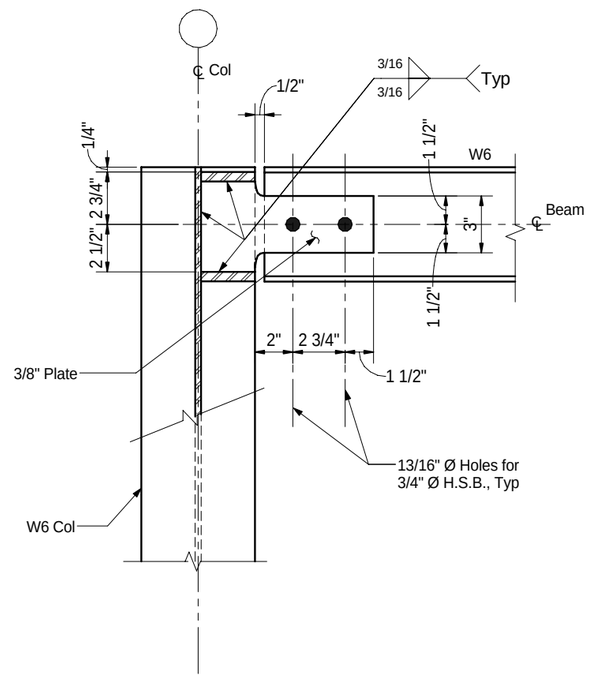

ELEVATION

TYP W6 TO COLUMN WEB CONNECTION

DETAIL 2 / AS-504

SCALE: 3" = 1'-0"

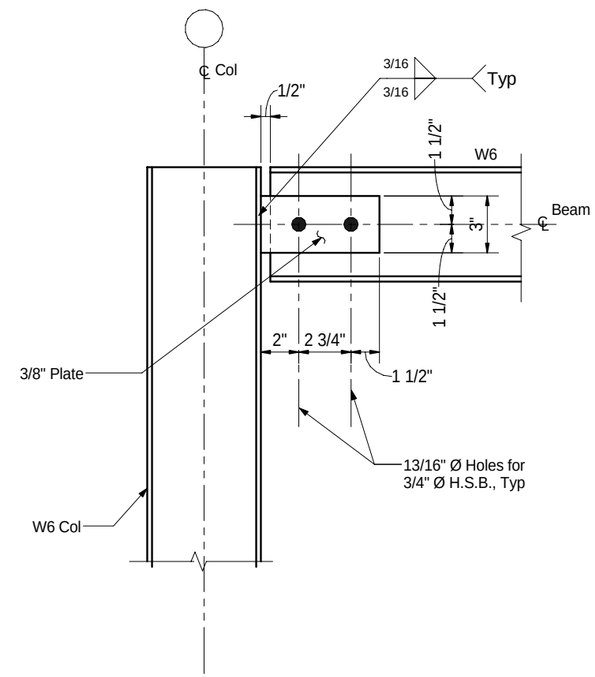

ELEVATION

TYP W6 TO COLUMN FLANGE CONNECTION

DETAIL 3 / AS-505

SCALE: 3" = 1'-0"

NOTES:

1. The Contractor shall verify in the field all controlling dimensions before ordering or fabricating any materials.
2. For general structural notes, see AS – 001.

AS-507

DESIGN	BY L. Guggemos	CHECKED M.S. Owyang	
DETAILS	BY O. Kurnovskaya	CHECKED M.S. Owyang	
QUANTITIES	BY	CHECKED	

PREPARED FOR THE STATE OF CALIFORNIA DEPARTMENT OF TRANSPORTATION

PROJECT ENGINEER

BRIDGE NO.

POST MILE

SFOBB TOLL PLAZA CANOPY RENOVATIONS

PUMP STATION - FRAMING DETAILS NO. 2

DESIGN GENERAL PLAN SHEET (ENGLISH) (REV. 06-01-09)

ORIGINAL SCALE IN INCHES FOR REDUCED PLANS 0 1 2 3

CU BATA011
EA 4G2801/4G2901

DISREGARD PRINTS BEARING EARLIER REVISION DATES

REVISION DATES (PRELIMINARY STAGE ONLY)

SHEET 50 OF 64

C:\Documents and Settings\reyesl\My Documents\SFOBB-Canopy-Arch_reyesl.rvt

6/26/2012 2:17:56 PM

DIST	COUNTY	ROUTE	POST MILES TOTAL PROJECT	SHEET No	TOTAL SHEETS
04	Ala	80	2.0/2.3	70	83

REGISTERED STRUCTURAL ENGINEER — DATE 06/26/2012

PLANS APPROVAL DATE

REGISTERED PROFESSIONAL ENGINEER — MEE SHING OWYANG — No. 2246 — STRUCTURAL — STATE OF CALIFORNIA

The State of California or its officers or agents shall not be responsible for the accuracy or completeness of electronic copies of this plan sheet.

Parsons Brinckerhoff
303 Second Street
Suite 700 North
San Francisco, CA 94107-1317

BAY AREA TOLL AUTHORITY
101 EIGHT STREET
OAKLAND, CA 94607

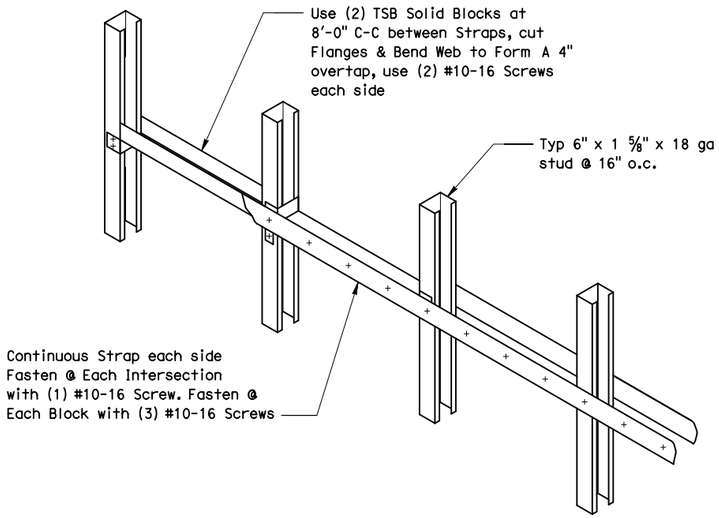

BLOCK & STRAP FOR WALL STUDS

1½" = 1'-0"

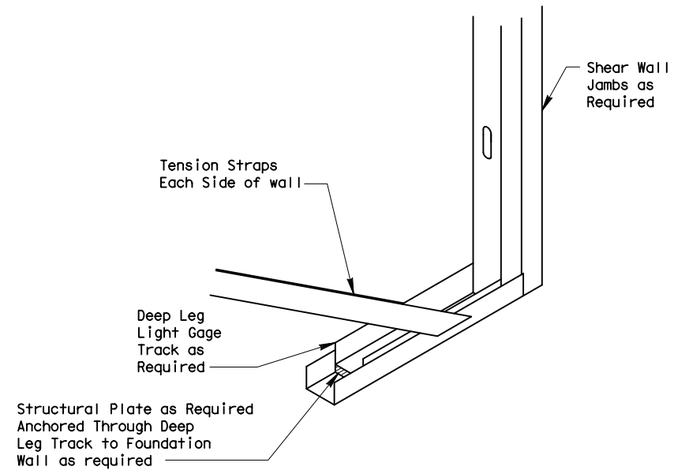

DETAIL 1/-

NO SALE

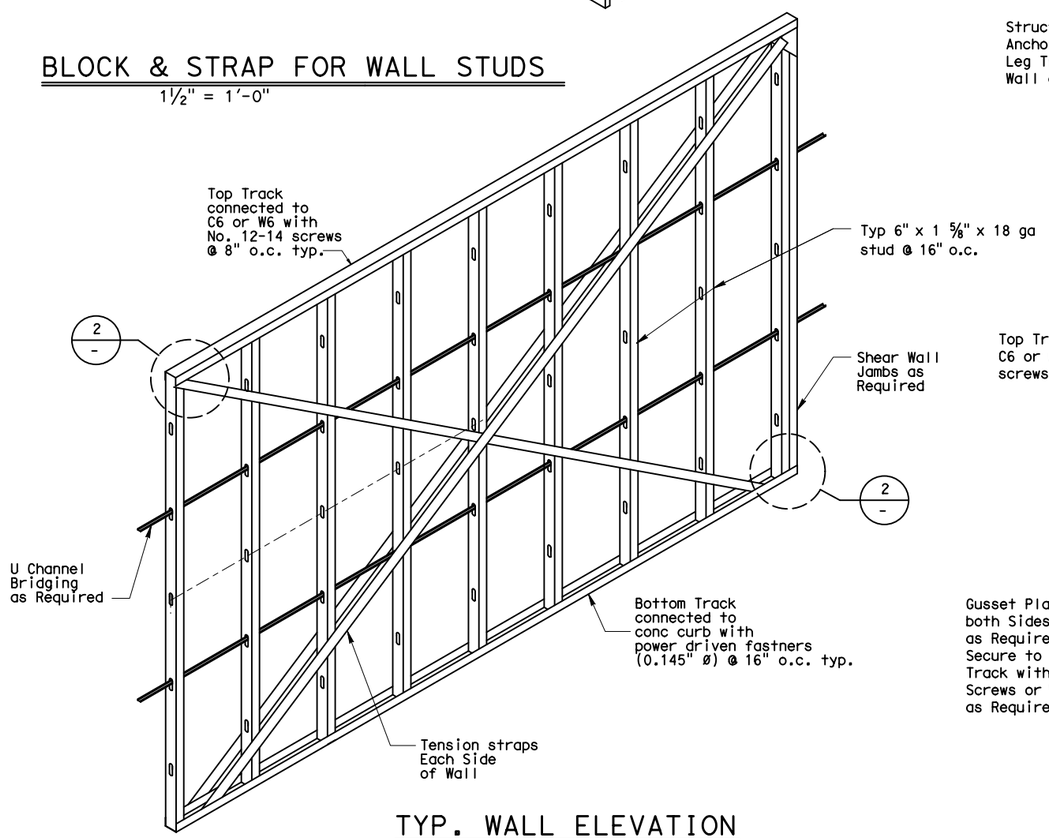

TYP. WALL ELEVATION

NO SALE

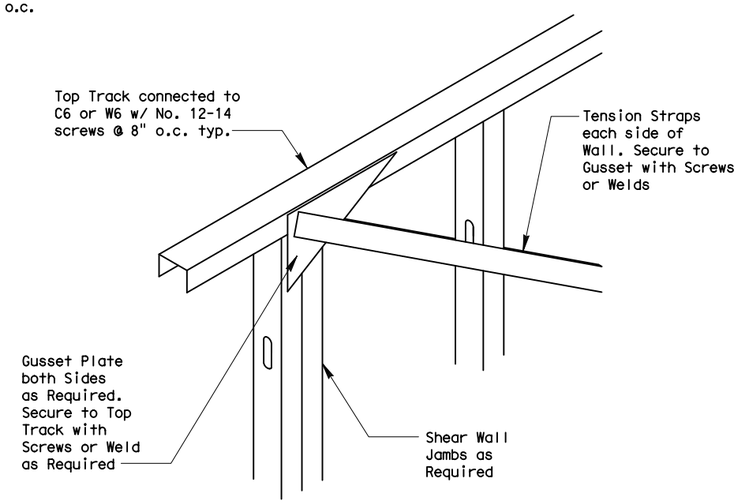

DETAIL 2/-

NO SALE

NOTES:

1. The Contractor shall verify in the field all controlling dimensions before ordering or fabricating any materials.
2. For General Structural Notes, see AS-001.
3. Erect framing and panels plumb, level and square in strict accordance with the approved shop drawings.
4. Handling and lifting of prefabricated panels shall be done in a manner as to not cause distortion in any member.
5. Track shall be securely anchored to the supporting structure. Concrete anchors shall be installed after full compressive strength has been achieved.
6. All track butt joints, abutting pieces of track shall be securely anchored to a common structural element, or they shall be butt welded or spliced together.
7. Studs shall be plumbed, aligned and securely attached to the flange or webs of both upper and lower tracks.
8. Jack studs or cripples shall be installed below window sills, above window and door heads, at free standing stair rails and elsewhere to furnish support and shall be securely attached to supporting members.
9. Wall stud bridging shall be attached in a manner to prevent stud rotation. Bridging rows shall be spaced according industry standard.
10. Framed wall openings shall include headers and supporting studs.
11. Temporary bracing shall be provided until erection is completed.
12. Provide stud walls at locations indicated on plans as "shear walls" for frame stability and lateral load resistance. See arch. plans for locations.
13. Provision for structure vertical movement shall be provided where indicated on the plans using a Vertical Slide Clip or other means in accordance with industry standard.

AS-508

DESIGN	BY L. Guggemos	CHECKED M.S. Owyang	
DETAILS	BY O. Kurnovskaya	CHECKED M.S. Owyang	
QUANTITIES	BY	CHECKED	

PREPARED FOR THE STATE OF CALIFORNIA DEPARTMENT OF TRANSPORTATION

PROJECT ENGINEER

BRIDGE NO.

POST MILE

SFOBB TOLL PLAZA CANOPY RENOVATIONS

PUMP STATION - DETAILS

DESIGN DETAIL SHEET (ENGLISH) (REV. 2/25/05)

ORIGINAL SCALE IN INCHES FOR REDUCED PLANS 0 1 2 3

CU 04
EA 4G2801/4G2901

DISREGARD PRINTS BEARING EARLIER REVISION DATES

REVISION DATES (PRELIMINARY STAGE ONLY)

SHEET 51 OF 64

FILE => AS-508.dgn

USERNAME => reyesl DATE PLOTTED => 25-JUN-2012 TIME PLOTTED => 17:41

DIST	COUNTY	ROUTE	POST MILES TOTAL PROJECT	SHEET No	TOTAL SHEETS
04	Ala	80	2.0/2.3	71	83

REGISTERED STRUCTURAL ENGINEER — DATE 06/26/2012

PLANS APPROVAL DATE

REGISTERED PROFESSIONAL ENGINEER — MEE SHING OWYANG — No. 2246 — STRUCTURAL — STATE OF CALIFORNIA

The State of California or its officers or agents shall not be responsible for the accuracy or completeness of electronic copies of this plan sheet.

Parsons Brinckerhoff
303 Second Street
Suite 700 North
San Francisco, CA 94107-1317

BAY AREA TOLL AUTHORITY
101 EIGHT STREET
OAKLAND, CA 94607

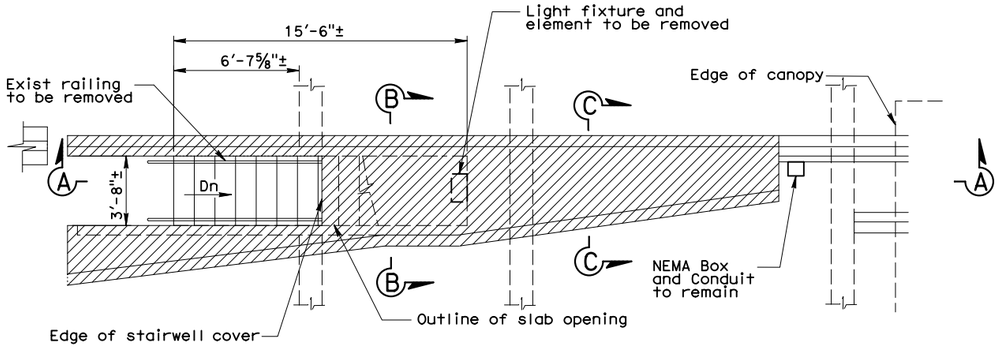

PLAN

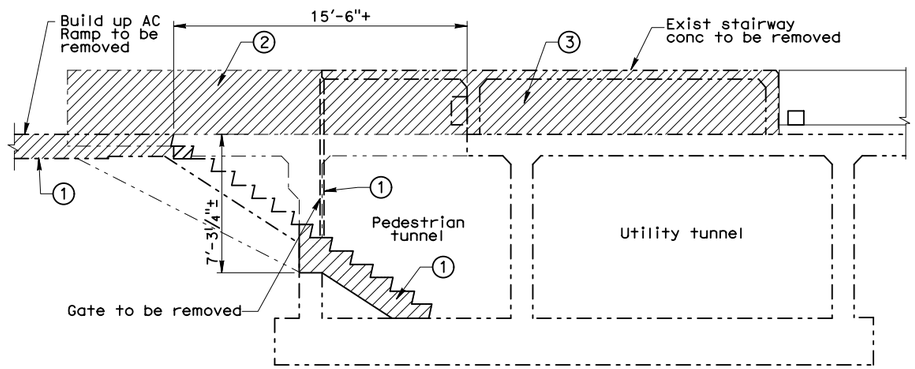

SECTION A-A

STAGE 1 - DEMOLITION

NO SCALE

LEGEND:

To be removed

Existing to remain

Construction staging

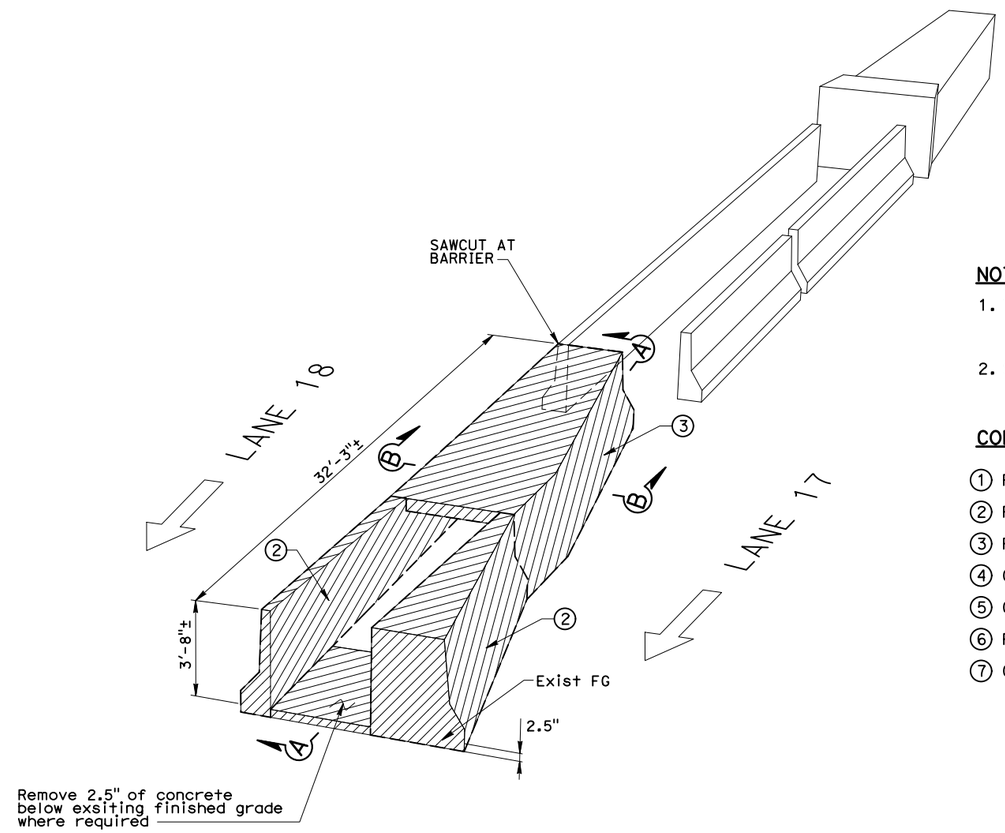

CRASH BARRIER

PERSPECTIVE VIEW

NO SCALE

NOTES:

1. The Contractor shall verify in the field all controlling dimensions before ordering or fabricating any materials.
2. See CALTRANS standard specifications for other specific requirements.

CONSTRUCTION STAGING

1. REMOVE STAIRS, GATE AND AC RAMP
2. REMOVE Conc. BARRIER
3. REMOVE Conc. LID
4. CONSTRUCT WALL (SEE SHEET S-302)
5. CONSTRUCT PCC SLAB (SEE SHEET S-302)
6. PLACE PCC BACKFILL (SEE SHEET S-302)
7. CONSTRUCT PAVEMENT

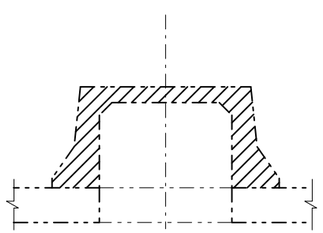

SECTION B-B

NO SCALE

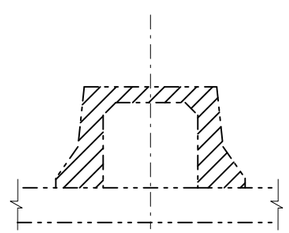

SECTION C-C

NO SCALE

AS-511

DESIGN	BY	CHECKED	
DETAILS	BY	CHECKED	
QUANTITIES	BY	CHECKED	

PREPARED FOR THE STATE OF CALIFORNIA DEPARTMENT OF TRANSPORTATION

PROJECT ENGINEER

BRIDGE NO.

POST MILE

SFOBB TOLL PLAZA CANOPY RENOVATIONS

STAIRWAY NO.7 REMOVAL

DESIGN DETAIL SHEET (ENGLISH) (REV. 2/25/05)

ORIGINAL SCALE IN INCHES FOR REDUCED PLANS 0 1 2 3

CU BATA011
EA 4G2801/4G2901

DISREGARD PRINTS BEARING EARLIER REVISION DATES

REVISION DATES (PRELIMINARY STAGE ONLY)

SHEET 52 OF 64

FILE => AS-511.dgn

USERNAME => reyesl DATE PLOTTED => 25-JUN-2012 TIME PLOTTED => 17:45

DIST	COUNTY	ROUTE	POST MILES TOTAL PROJECT	SHEET No	TOTAL SHEETS
04	Ala	80	2.0/2.3	72	83

REGISTERED STRUCTURAL ENGINEER — DATE 06/26/2012

PLANS APPROVAL DATE

REGISTERED PROFESSIONAL ENGINEER — MEE SHING OWYANG — No. 2246 — STRUCTURAL — STATE OF CALIFORNIA

The State of California or its officers or agents shall not be responsible for the accuracy or completeness of electronic copies of this plan sheet.

Parsons Brinckerhoff
303 Second Street
Suite 700 North
San Francisco, CA 94107-1317

BAY AREA TOLL AUTHORITY
101 EIGHT STREET
OAKLAND, CA 94607

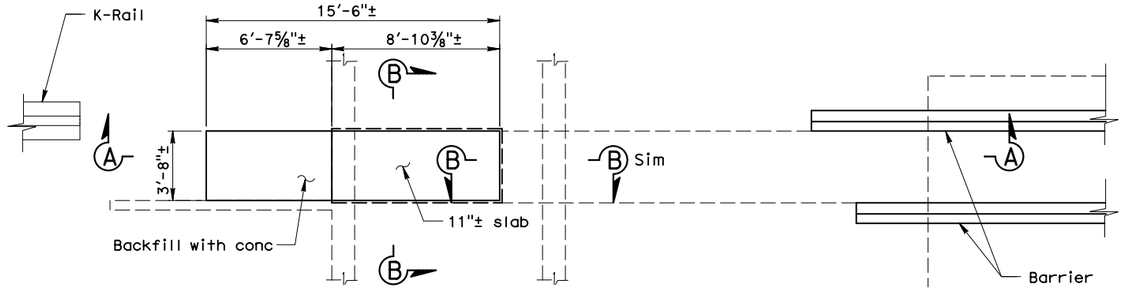

STAIRWELL COVER SLAB PLAN

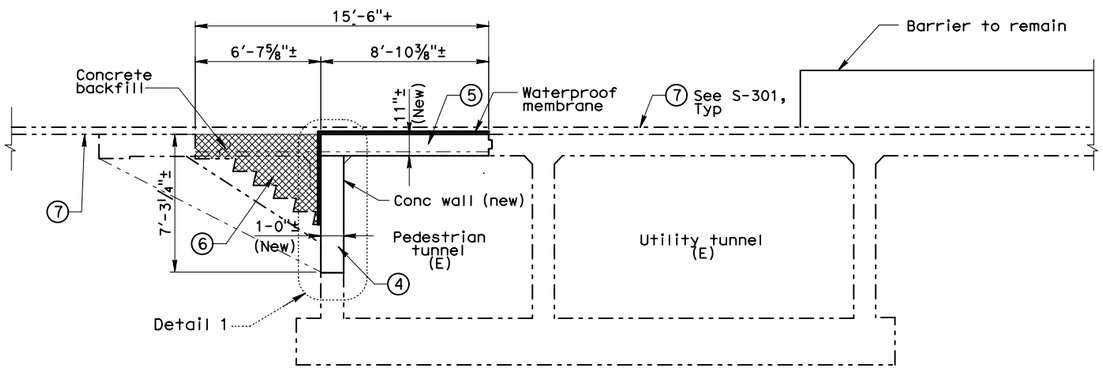

SECTION A-A

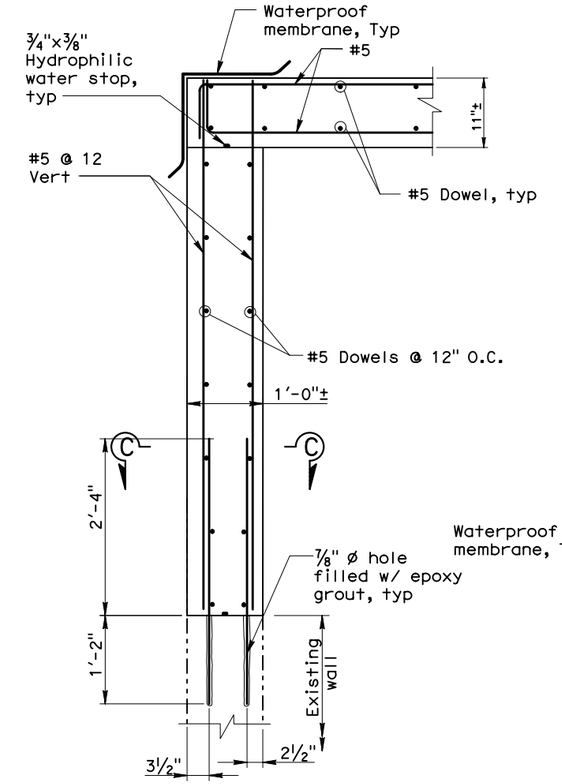

DETAIL 1

1"=1'-0"

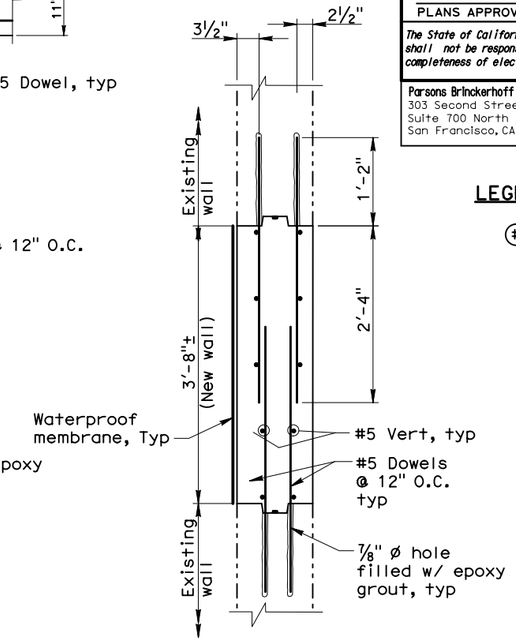

SECTION C-C

1"=1'-0"

LEGEND:

(#) Construction sequencing

STAGE 2 - RECONSTRUCTION

¼"=1'-0"

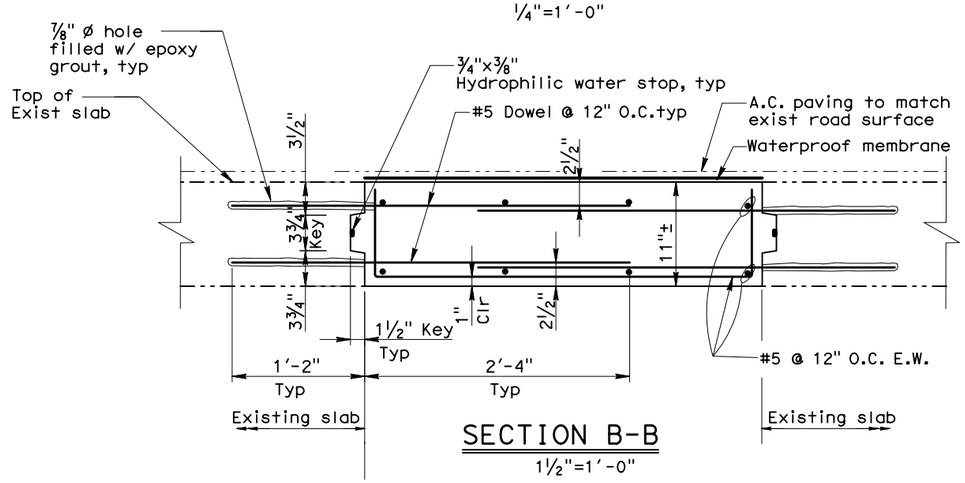

SECTION B-B

1½"=1'-0"

NOTES:

1. The Contractor shall verify in the field all controlling dimensions before ordering or fabricating any materials.
2. All concrete shall be normal weight with type II, low alkali Portal cement and ultimate compressive strength @ 28 days of 4,000 psi.
3. Reinforcement for structural concrete shall be deformed steel bars conforming to ASTM A706, with nominal yield strength of 60,000 psi.
4. Epoxy grout shall be a three-component epoxy resin grout with the following minimum density and physical properties in 24 hours:

Density (ASTM C-905):	128 pcf
Volume change:	-0.02%
Compression strength (ASTM C-579):	11,500 psi
Flexural strength (ASTM C-580):	7,000 psi
Modulus of elasticity (ASTM C-580):	114,000 psi
Tensile strength (ASTM C-307):	2,600 psi
Bond strength of concrete (ASTM D-4541):	300-400 psi

5. Hydrophilic water stop shall be a flexible strip made of a hydrophilic expanding rubber combined with chloroprene rubber, Swellseal 2010 by Vinylex Corporation or provided equal or better, with the following physical properties:

Expansions ratio:	2 X in contact with potable water
Elongation before break:	500%
Hardness:	40
Density:	1.27
Tensile Strength:	853 psi

6. See CALTRANS standard specifications for other specific requirements.

AS-512

DESIGN	BY	CHECKED
DETAILS	BY	CHECKED
QUANTITIES	BY	CHECKED

PREPARED FOR THE STATE OF CALIFORNIA DEPARTMENT OF TRANSPORTATION

PROJECT ENGINEER

BRIDGE NO.

POST MILE

SFOBB TOLL PLAZA CANOPY RENOVATIONS
STAIRWAY NO.7 REMOVAL

DESIGN DETAIL SHEET (ENGLISH) (REV. 2/25/05)

ORIGINAL SCALE IN INCHES FOR REDUCED PLANS 0 1 2 3

CU BATA011
EA 4G2801/4G2901

DISREGARD PRINTS BEARING EARLIER REVISION DATES

REVISION DATES (PRELIMINARY STAGE ONLY)

SHEET 53 OF 64

FILE => AS-512.dgn

USERNAME => reyesl DATE PLOTTED => 25-JUN-2012 TIME PLOTTED => 17:47

DIST.	COUNTY	ROUTE	POST MILES TOTAL PROJECT	SHEET NO.	TOTAL SHEETS
04	Ala	80	2.0/2.3	73	83

Syn Yee Chin
REGISTERED ELECTRICAL ENGINEER

06/26/2012
DATE

REGISTERED PROFESSIONAL ENGINEER
SYN YEE CHIN
No. 18186
Exp. 09/30/2013
ELECTRICAL
STATE OF CALIFORNIA

PLANS APPROVAL DATE

The State of California or its officers or agents shall not be responsible for the accuracy or completeness of electronic copies of this plan sheet.

Parsons Brinckerhoff Inc.
303 Second Street, Suite 700N
San Francisco, CA 94107

Bay Area Toll Authority
101 Eight Street
Oakland, CA 94607

GENERAL NOTES:

1. All electrical work shall conform to the state of California Standard Specifications dated MAY 2006 and Standard Plans dated MAY 2006. The general notes and the special provisions under these contracts also apply. For any conflict of provisions, State Guidelines apply.
2. All electrical, CMS, and toll system equipment, infrastructure, landscaping or buildings damaged by the contractor's operations shall be repaired or replaced at the Contractor's expense.
3. All conduit routing is diagrammatic. All electrical equipment including conduits, junction and splice boxes are shown in approximate locations only. Exact location of equipment and devices shall be adjusted depending on field conditions or by the Engineer. Contractor shall provide additional junction boxes as required.
4. Contractor shall use Type 1 conduit throughout unless otherwise noted. Minimum size of conduit shall be 1".
5. All conduit fittings for 3" conduits and larger shall have a 24" minimum bending radius.
6. All conduits, including spares shall be provided with wiring pull ropes prior to cable installation.
7. All equipment including conduits, junction boxes, cabling, equipment, and cabinets shall be clearly labeled with accurate nameplate tags.
8. All feeders and branch circuits shall be provided with an equipment ground wire.
9. Refer to structural plans for exact location of toll structures, frames and mounting brackets.
10. All conduits shall be supported at a minimum of every 4 feet.
11. All electrical items that use anchors to attach to the concrete structures shall use stainless steel power stud anchors-threaded version; refer to special provisions.
12. All electrical work shall meet all the requirements of the latest editions of the National Electrical Code (NEC), National Electrical Safety Code (NESC), and the California Electrical Code (CEC). All components shall be properly grounded and bonded per NEC requirements.
13. All electrical and exterior connections shall be weatherproof.
14. The Contractor shall be responsible for field verifying any existing conduits and junction boxes to be used in this contract prior to disconnecting cable or pulling new cable through. Any damage to new or existing cable or other infrastructure shall be the responsibility of the Contractor to repair at no additional cost to BATA.
15. All enclosures shall be NEMA 4X stainless steel.
16. Equipment bonding and grounding conductors are required in all conduits. The bonding wire size shall be increased to match the circuit breaker size in conformance with the code. Bonding of all metallic conduits in metal pull, splice, or junction boxes shall be by means of approved bonding bushings and bonding jumpers connected to the bonding wire running in the conduit system. All equipment and metallic components shall be properly bonded to the grounding system with proper grounding lugs and through the system grounding conductor.
17. Refer to special provisions for wire and cable insulation resistance test.

INDEX OF DRAWINGS:

DRAWING TITLE	DRAWING NO.
GENERAL NOTES, LEGEND, ABBREVIATION AND INDEX OF DRAWINGS	AE-101
TUNNEL LEVEL CONDUIT ROUTING	AE-102
TUNNEL TO CANOPY CONDUIT ROUTING (SHEET 1 OF 2)	AE-103
TUNNEL TO CANOPY CONDUIT ROUTING (SHEET 2 OF 2)	AE-104
LIGHTING PLAN	AE-105
SECTION AND ELECTRICAL DETAILS	AE-106
PARTIAL ONE LINE DIAGRAM	AE-107
PNL CMS/LIGHTING PANELBOARD SCHEDULE	AE-108
ELECTRICAL WIRING DIAGRAM AND CONTROL BOX	AE-109
PUMP STATION BUILDING – ELECTRICAL PLAN	AE-110
PUMP STATION BUILDING – ELECTRICAL WIRINGS	AE-111

ABBREVIATIONS:

AFF	Above Finished Floor
AFG	Above Finished Grade
CEC	California Electrical Code
CMS	Changeable Message Sign
COMM	Communications
E	Existing
GFCI	Ground Fault circuit interrupter
JB	Junction Box
MPE	Main Plaza Electrical (Back-up)
Mtd	Mounted
N	New
NEC	National Electrical Code
NEMA	National Electrical Manufacturers Association
NESC	National Electrical Safety Code
PB	Ceiling/Wall Mounted Pull Box
PEU	Photoelectric sensor
PNL	Panel
UL	Underwriters Laboratories
WP	Weatherproof
XFMR	Transformer
Type 1	Conduit Galvanized Rigid Steel (RGS)
Type 2	Conduit PVC Coated Galvanized Rigid Steel

LEGEND:

CMS	Changeable Message Sign
	Extinguishable Message Sign
	Underground Existing Conduit
	Underground New Conduit with new cables
	New Conduit with new cables
	Junction Box
	Existing Junction Box
P	CMS Cabinet
	Conduit In
	Conduit Out
	Riser Conduit
	LED Fixtures connected in series
	100W driver for LED Fixtures
	Duplex Receptacle and Box (and cover if WP)
$	FD Single Gang Switch Box
$3a	Three Position Selector Switch
	Lighting Contactor

THIS PLAN IS ACCURATE FOR ELECTRICAL WORK ONLY.

AE-101

	BY		CHECKED	
DESIGN	BY	N. Najdi	CHECKED	L. Bergeron
DETAILS	BY	L. Reyes	CHECKED	L. Bergeron
QUANTITIES	BY		CHECKED	

PREPARED FOR THE
STATE OF CALIFORNIA
DEPARTMENT OF TRANSPORTATION

PROJECT ENGINEER

BRIDGE NO.
POST MILE

SFOBB TOLL PLAZA CANOPY RENOVATIONS
GENERAL NOTES, LEGEND & ABBREVIATION

DESIGN GENERAL PLAN SHEET (ENGLISH) (REV. 06-01-09)

ORIGINAL SCALE IN INCHES FOR REDUCED PLANS 0 1 2 3

CU BATA011
EA 4G2801/4G2901

DISREGARD PRINTS BEARING EARLIER REVISION DATES

REVISION DATES (PRELIMINARY STAGE ONLY)

SHEET 54 OF 64

C:\Documents and Settings\reyesl\My Documents\SFOBB-Canopy-Arch_reyesl.rvt

6/27/2012 9:58:18 AM

DIST.	COUNTY	ROUTE	POST MILES TOTAL PROJECT	SHEET N0.	TOTAL SHEETS
04	Ala	80	2.0/2.3	74	83

Syn Yee Chin
REGISTERED ELECTRICAL ENGINEER

06/26/2012
DATE

REGISTERED PROFESSIONAL ENGINEER
SYN YEE CHIN
No. 18186
Exp. 09/30/2013
ELECTRICAL
STATE OF CALIFORNIA

PLANS APPROVAL DATE

The State of California or its officers or agents shall not be responsible for the accuracy or completeness of electronic copies of this plan sheet.

Parsons Brinckerhoff Inc.
303 Second Street, Suite 700N
San Francisco, CA 94107

Bay Area Toll Authority
101 Eight Street
Oakland, CA 94607

NOTES:

1. References:
   - See sheet AE-103 and AE-104 for Tunnel to Canopy Conduit Routing.
2. The Contractor shall run new conduit parallel to existing conduits, and add junction (pull) boxes as required.

SHEET NOTES:

1. Install new 1" conduit, 2#10 + 1#10G cable (for canopy LED light fixtures).
2. Install new ceiling splice box.
3. Install new wall-mounted pull box.

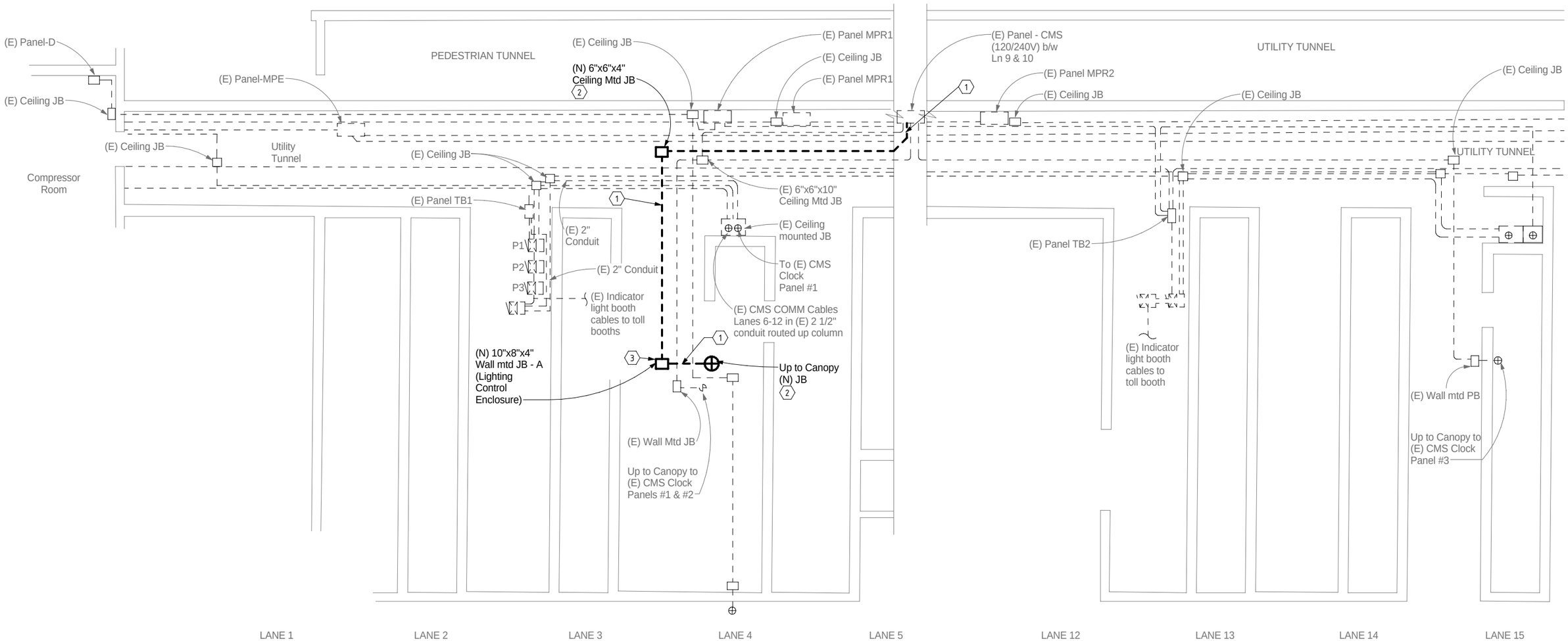

TUNNEL LEVEL - CONDUIT PLAN

NO SCALE

THIS PLAN IS ACCURATE FOR ELECTRICAL WORK ONLY.

AE-102

DESIGN	BY N. Najdi	CHECKED L. Bergeron	
DETAILS	BY L. Reyes	CHECKED L. Bergeron	
QUANTITIES	BY	CHECKED	

PREPARED FOR THE STATE OF CALIFORNIA DEPARTMENT OF TRANSPORTATION

PROJECT ENGINEER

BRIDGE NO.

POST MILE

SFOBB TOLL PLAZA CANOPY RENOVATIONS

TUNNEL LEVEL CONDUIT ROUTING

DESIGN GENERAL PLAN SHEET (ENGLISH) (REV. 06-01-09)

ORIGINAL SCALE IN INCHES FOR REDUCED PLANS 0 1 2 3

CU BATA011
EA 4G2801/4G2901

DISREGARD PRINTS BEARING EARLIER REVISION DATES

REVISION DATES (PRELIMINARY STAGE ONLY)

SHEET 55 OF 64

C:\Documents and Settings\reyesl\My Documents\SFOBB-Canopy-Arch_reyesl.rvt

6/26/2012 5:41:47 PM

DIST.	COUNTY	ROUTE	POST MILES TOTAL PROJECT	SHEET N0.	TOTAL SHEETS
04	Ala	80	2.0/2.3	75	83

Syn Yee Chin
REGISTERED ELECTRICAL ENGINEER
06/26/2012
DATE

REGISTERED PROFESSIONAL ENGINEER
SYN YEE CHIN
No. 18186
Exp. 09/30/2013
ELECTRICAL
STATE OF CALIFORNIA

PLANS APPROVAL DATE

The State of California or its officers or agents shall not be responsible for the accuracy or completeness of electronic copies of this plan sheet.

Parsons Brinckerhoff Inc.
303 Second Street, Suite 700N
San Francisco, CA 94107

Bay Area Toll Authority
101 Eight Street
Oakland, CA 94607

NOTES:

1. References:
   - See sheet AE-108, for PNL CMS/LIGHTING circuit breaker schedule.
   - For the work related to installing new composite panels, see architectural plans.
   - For photocell information, see sheet AE-105/106.

2. The Contractor shall maintain existing or temporary signs and signal lights for all lanes at all times during construction. The Contractor shall not close more than four lanes during a "sequence." The outer lanes (Lane 1 & 4) are for safety from construction debris or alternate access to ground for people and material. The architectural composite metal panel replacement work shall be done sequentially so that the remaining 13 lanes not being remodeled are not affected. The Contractor shall field verify and rewire existing circuits as required to facilitate power off of all circuits around construction site.

SHEET NOTES:

(1) To allow for the replacement of architectural composite metal panels, the Contractor shall disconnect all power and communications feeding the existing CMS/Clocks. The Contractor shall perform the following steps in this order:
   A. Verify at site, turn off, lock out and tag associated circuit breakers inside existing PNL CMS/LIGHTING used for the CMS/Clocks. PNL CMS/LIGHTING is located inside the utility tunnel.
   B. Disconnect the existing power and communication cables from the CMS/CLOCKs; coil and protect each set of cables at the nearest junction boxes inside the canopy.

(2) After the new architectural composite panels are installed, and the CMS/Clocks are fitted back into the architectural panels, reconnect the coiled power and communication cables into the CMS/CLOCKs; only then unlock, remove tag, and turn back on the associated circuit breakers in PNL CMS/LIGHTING. Conduct functional testing upon completion.

(3) To allow for the replacement of architectural composite metal panels, the Contractor shall disconnect all power and controls feeding the existing EMS chassis. The Contractor shall perform the following steps in this order:
   A. Verify at site, turn off, lock out and tag all associated circuit breakers on various panels used for power and controls of the EMS chassis.
   B. Disconnect the existing power and control cables from the existing EMS Chassis to the nearest junction boxes.

(4) After the new architectural composite panels are installed, and the existing EMS Chassis are fitted back into the architectural panels, pull new power and control cables in conduits (same sizes that match existing) from the nearest junction boxes back into the EMS chassis to reconnect; and only then unlock, remove tag, and turn back on the associated circuit breakers for the EMS chassis power and controls. Conduct functional testing upon completion.

(5) To allow for the replacement of the architectural composite metal panels, the Contractor shall disconnect all power and controls feeding the existing overhead traffic lights (Red & Green). The Contractor shall first perform the following steps in this order:
   A. Verify at site, turn off, lock out and tag all associated circuit breakers used for existing overhead traffic lights (Red and Green).
   B. Disconnect the existing power and control cables from the existing overhead traffic lights to the nearest junction boxes.

(6) After the new architectural composite panels are installed, and the existing overhead traffic lights are fitted back into the new composite metal panels, pull new power and control cables in new conduits from the junction boxes back to the overhead traffic lights to reconnect; and only then unlock, remove tag, and turn back on the associated breakers. Conduct functional testing upon completion.

(7) Support new 1" conduit, 2#10 + #10G with new brackets at a minimum of 5 ft. interval on existing steel column cladding.

(8) Install new 1800 Watts photocell with swivel mounting and FD single gang box on the roof.

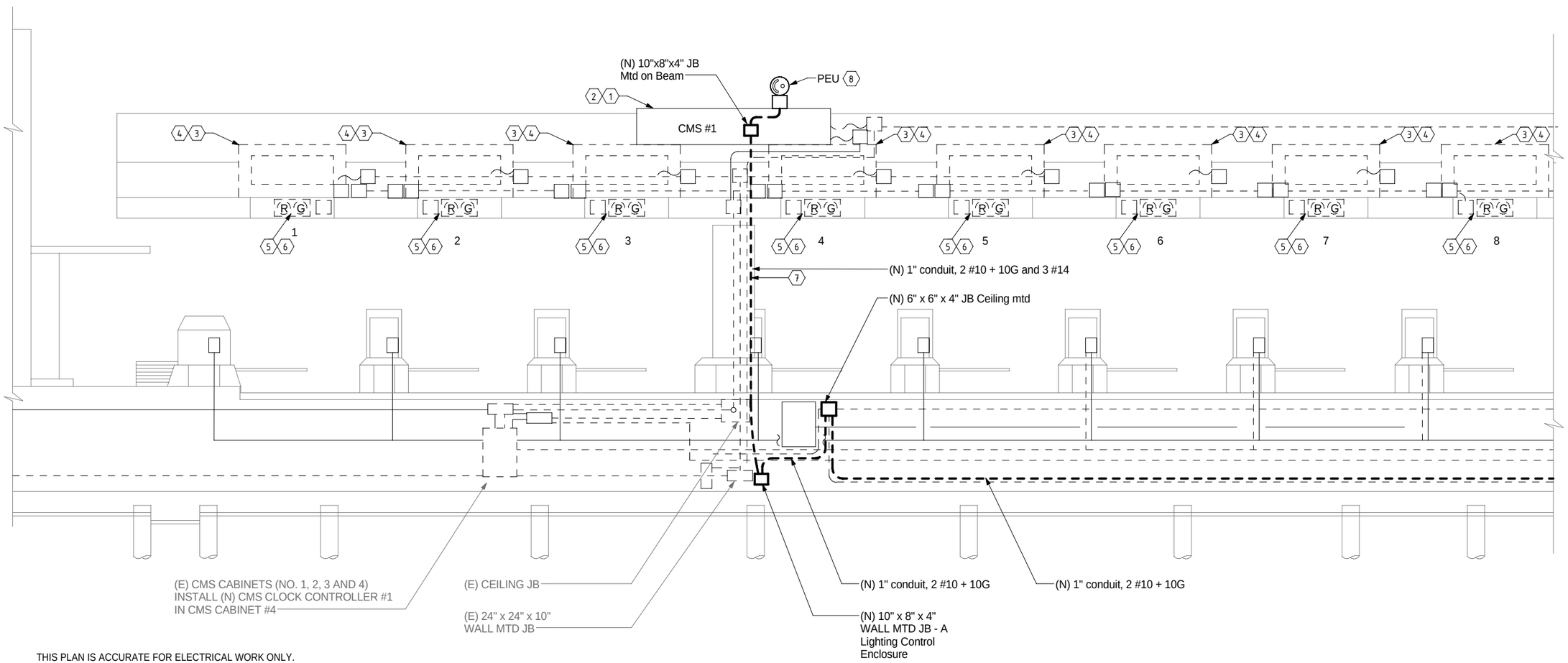

THIS PLAN IS ACCURATE FOR ELECTRICAL WORK ONLY.

AE-103

	BY	CHECKED
DESIGN	N. Najdi	L. Bergeron
DETAILS	L. Reyes	L. Bergeron
QUANTITIES		

PREPARED FOR THE
STATE OF CALIFORNIA
DEPARTMENT OF TRANSPORTATION

PROJECT ENGINEER

BRIDGE NO.
POST MILE

SFOBB TOLL PLAZA CANOPY RENOVATIONS
TUNNEL TO CANOPY CONDUIT ROUTING - 1 OF 2

DESIGN GENERAL PLAN SHEET (ENGLISH) (REV. 06-01-09)

ORIGINAL SCALE IN INCHES FOR REDUCED PLANS 0 1 2 3

CU BATA011
EA 4G2801/4G2901

DISREGARD PRINTS BEARING EARLIER REVISION DATES

REVISION DATES (PRELIMINARY STAGE ONLY)

SHEET 56 OF 64

C:\Documents and Settings\reyesl\My Documents\SFOBB-Canopy-Arch_reyesl.rvt

6/26/2012 5:44:00 PM

DIST.	COUNTY	ROUTE	POST MILES TOTAL PROJECT	SHEET NO.	TOTAL SHEETS
04	Ala	80	2.0/2.3	76	83

Syn Yee Chin
REGISTERED ELECTRICAL ENGINEER
06/26/2012
DATE

PLANS APPROVAL DATE

REGISTERED PROFESSIONAL ENGINEER
SYN YEE CHIN
No. 18186
Exp. 09/30/2013
ELECTRICAL
STATE OF CALIFORNIA

The State of California or its officers or agents shall not be responsible for the accuracy or completeness of electronic copies of this plan sheet.

Parsons Brinckerhoff Inc.
303 Second Street, Suite 700N
San Francisco, CA 94107

Bay Area Toll Authority
101 Eight Street
Oakland, CA 94607

NOTES:

1. References:
   - See sheet AE-108, for PNL CMS/LIGHTING circuit breaker schedule.
   - For the work related to installing new composite panels, see Architectural plans.
   - For photocell information, see sheet AE-105/106.

2. The Contractor shall maintain existing or temporary signs and signal lights for all lanes at all times during construction. The Contractor shall not close more than four lanes during a "sequence." The outer lanes (Lane 1 & 4) are for safety from construction debris or alternate access to ground for people and material. The architectural composite metal panel replacement work shall be done sequentially so that the remaining 13 lanes not being remodeled are not affected. The Contractor shall field verify and rewire existing circuits as required to facilitate power off of all circuits around construction site.

SHEET NOTES:

(1) To allow for the replacement of architectural composite metal panels, the Contractor shall disconnect all power and communications feeding the existing CMS/Clocks. The Contractor shall perform the following steps in this order:
   A. Verify at site, turn off, lock out and tag associated circuit breakers inside existing PNL CMS/LIGHTING used for the CMS/Clocks. PNL CMS/LIGHTING is located inside the utility tunnel.
   B. Disconnect the existing power and communication cables from the CMS/CLOCKs; coil and protect each set of cables at the nearest junction boxes inside the canopy.

(2) After the new architectural composite panels are installed, and the CMS/Clocks are fitted back into the architectural panels, reconnect the coiled power and communication cables into the CMS/CLOCKs; only then unlock, remove tag, and turn back on the associated circuit breakers in PNL CMS/LIGHTING. Conduct functional testing upon completion.

(3) To allow for the replacement of architectural composite metal panels, the Contractor shall disconnect all power and controls feeding the existing EMS chassis. The Contractor shall perform the following steps in this order:
   1. Verify at site, turn off, lock out and tag all associated circuit breakers on various panels used for power and controls of the EMS chassis.
   2. Disconnect the existing power and control cables from the existing EMS Chassis to the nearest junction boxes.

(4) After the new architectural composite panels are installed, and the existing EMS Chassis are fitted back into the architectural panels, pull new power and control cables in conduits (same sizes that match existing) from the nearest junction boxes back into the EMS chassis to reconnect; and only then unlock, remove tag, and turn back on the associated circuit breakers for the EMS chassis power and controls. Conduct functional testing upon completion.

(5) To allow for the replacement of the architectural composite metal panels, the Contractor shall disconnect all power and controls feeding the existing overhead traffic lights (Red & Green). The Contractor shall first perform the following steps in this order:
   1. Verify at site, turn off, lock out and tag all associated circuit breakers used for existing overhead traffic lights (Red and Green).
   2. Disconnect the existing power and control cables from the existing overhead traffic lights to the nearest junction boxes.

(6) After the new architectural composite panels are installed, and the existing overhead traffic lights are fitted back into the new composite metal panels, pull new power and control cables in new conduits from the junction boxes back to the overhead traffic lights to reconnect; and only then unlock, remove tag, and turn back on the associated breakers. Conduct functional testing upon completion.

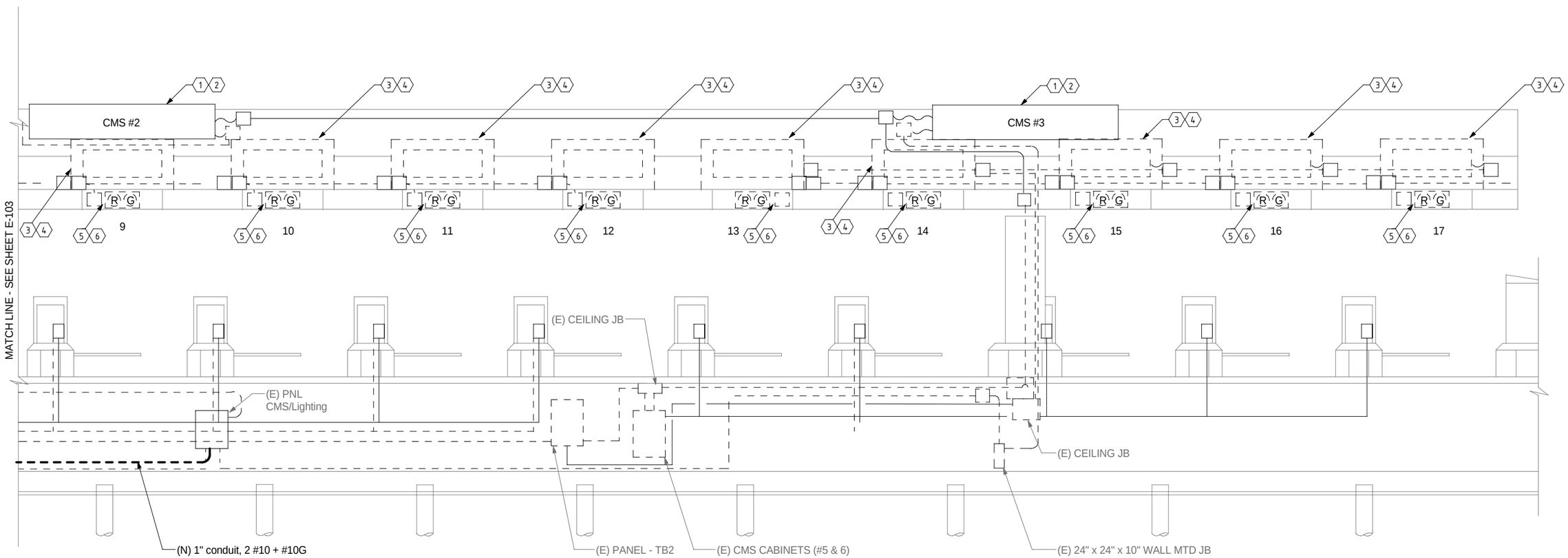

THIS PLAN IS ACCURATE FOR ELECTRICAL WORK ONLY.

AE-104

	BY	CHECKED
DESIGN	N. Najdi	L. Bergeron
DETAILS	L. Reyes	L. Bergeron
QUANTITIES		

PREPARED FOR THE STATE OF CALIFORNIA DEPARTMENT OF TRANSPORTATION

PROJECT ENGINEER

BRIDGE NO.

POST MILE

SFOBB TOLL PLAZA CANOPY RENOVATIONS
TUNNEL TO CANOPY CONDUIT ROUTING (2 OF 2)

DESIGN GENERAL PLAN SHEET (ENGLISH) (REV. 06-01-09)

ORIGINAL SCALE IN INCHES FOR REDUCED PLANS 0 1 2 3

CU BATA011
EA 4G2801/4G2901

DISREGARD PRINTS BEARING EARLIER REVISION DATES

REVISION DATES (PRELIMINARY STAGE ONLY)

SHEET 57 OF 64

C:\Documents and Settings\reyesl\My Documents\SFOBB-Canopy-Arch_reyesl.rvt

6/26/2012 2:17:08 PM

DIST.	COUNTY	ROUTE	POST MILES TOTAL PROJECT	SHEET NO.	TOTAL SHEETS
04	Ala	80	2.0/2.3	77	83

Syn Yee Chin 06/26/2012
REGISTERED ELECTRICAL ENGINEER DATE

PLANS APPROVAL DATE

REGISTERED PROFESSIONAL ENGINEER
SYN YEE CHIN
No. 18186
Exp. 09/30/2013
ELECTRICAL
STATE OF CALIFORNIA

The State of California or its officers or agents shall not be responsible for the accuracy or completeness of electronic copies of this plan sheet.

Parsons Brinckerhoff Inc.
303 Second Street, Suite 700N
San Francisco, CA 94107

Bay Area Toll Authority
101 Eight Street
Oakland, CA 94607

NOTES:

1. For other related work not shown on this sheet, see electrical drawings AE-101 through AE-110.
2. All conduit routing is diagrammatic. Junction box location shown on this drawing shall be adjusted per field conditions.
3. The Contractor shall coordinate all work, particularly on the linear floodlight installation, prior to the start of any work.
4. References:
   - Refer to the manufacturer's installation instructions for mounting the LED fixtures.
   - Refer to AE-109 for lighting control box details and wiring diagram.
   - Refer to AE-106 for Section details.

LIGHTING EQUIPMENT:

(A) Toll Plaza Canopy LED linear floodlight shall be Cooper io lighting line 1.5 (1.5" diameter), 5000K white, 67 lms/ft standard output (customize if necessary to meet architect's requirements), with 18'-0" of 18 AWG power cord to remote driver, UL listed for wet locations, or approved equal.

(B) Represents Advance 100W, 24V driver, cooper IO lighting #250IOADV100 or approved equal.

(C) Represents approximately fifteen 12" linear LED light fixtures (Line 1.5) connected in series using rigid interconnect plugs

(D) Represents approximately seven 12" linear LED light fixtures (Line 1.5) connected in series using rigid interconnect plugs.

(E) Represents approximately twelve 12" linear LED light fixtures (Line 1.5) connected in series using rigid interconnect plugs.

(F) Photoelectric sensor (INTERMATIC Model K4251 or approved equal).

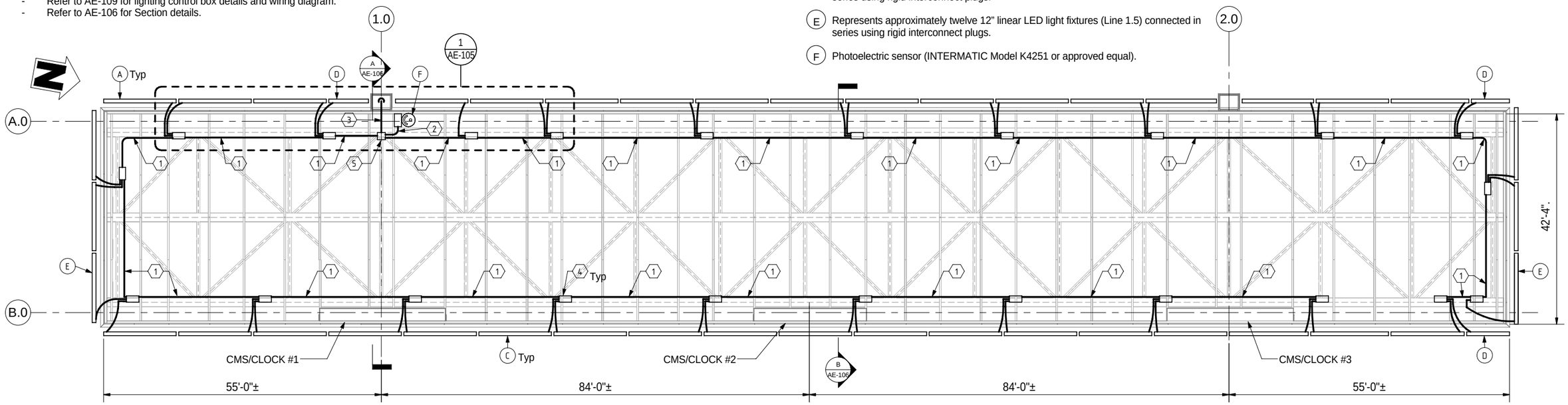

LIGHTING PLAN

SCALE: 1" = 10'-0"

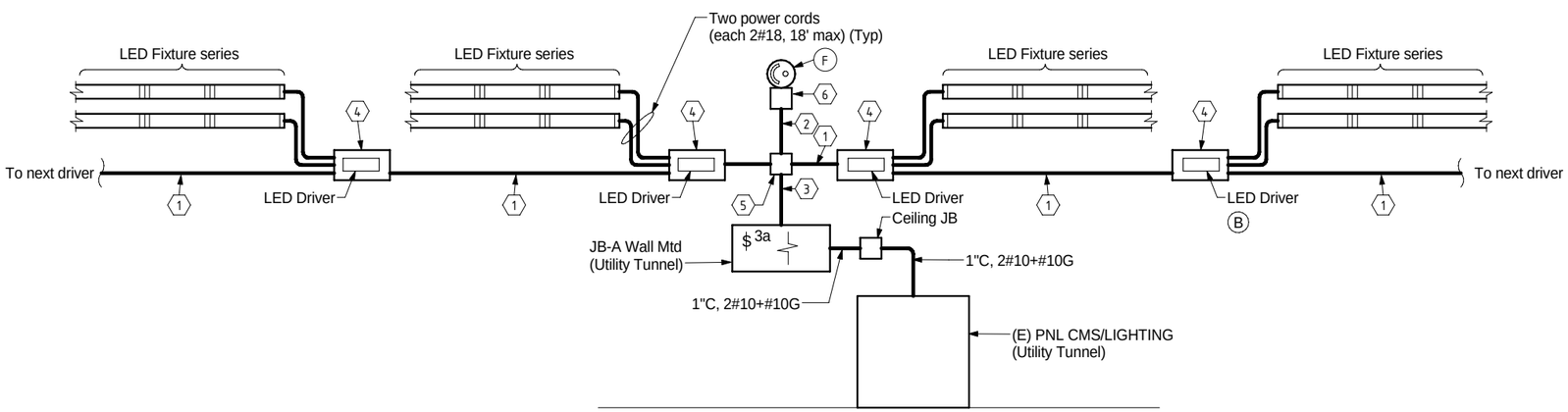

DETAIL 1

SHEET NOTES:

(1) 1"C – 2#10 + #10G.

(2) 1"C – 3#14.

(3) 1"C – 3#14 and 2#10 + #10G.

(4) NEMA 4X stainless steel junction box enclosure with stainles steel back panel (Hoffman A-1412CHNFSS6 and A-14P12SS or approved equal), 14"W x 12"H x 6"D, for the LED Driver. Inside this enclosure. See wiring diagram, AE-109, for splicing inside this enclosure.

(5) NEMA 4X stainless steel junction box, 8" x 6" x 4", (Hoffman A-8064CHNFSS6 or approved equal).

(6) Roof mounted deep single gang metal box with 1" hub size (Thomas & Betts FDC3-TB or approved equal). Use one 1" to ½" reducing bushing (Garvin RB-10050 or approved equal) in order to accommodate for connection to the photoelectric sensor ½" swivel.

THIS PLAN IS ACCURATE FOR ELECTRICAL WORK ONLY.

AE-105

	BY	CHECKED
DESIGN	N. Najdi	L. Bergeron
DETAILS	L. Reyes	L. Bergeron
QUANTITIES		

PREPARED FOR THE STATE OF CALIFORNIA DEPARTMENT OF TRANSPORTATION

PROJECT ENGINEER

BRIDGE NO.

POST MILE

SFOBB TOLL PLAZA CANOPY RENOVATIONS

LIGHTING PLAN

DESIGN GENERAL PLAN SHEET (ENGLISH) (REV. 06-01-09)

ORIGINAL SCALE IN INCHES FOR REDUCED PLANS 0 1 2 3

CU BATA011
EA 4G2801/4G2901

DISREGARD PRINTS BEARING EARLIER REVISION DATES

REVISION DATES (PRELIMINARY STAGE ONLY)

SHEET 58 OF 64

C:\Documents and Settings\reyesl\My Documents\SFOBB-Canopy-Arch_reyesl.rvt

6/26/2012 5:59:16 PM

DIST.	COUNTY	ROUTE	POST MILES TOTAL PROJECT	SHEET NO.	TOTAL SHEETS
04	Ala	80	2.0/2.3	78	83

REGISTERED ELECTRICAL ENGINEER — 06/26/2012 DATE

PLANS APPROVAL DATE

REGISTERED PROFESSIONAL ENGINEER — SYN YEE CHIN No. 18186 Exp. 09/30/2013 ELECTRICAL — STATE OF CALIFORNIA

The State of California or its officers or agents shall not be responsible for the accuracy or completeness of electronic copies of this plan sheet.

Parsons Brinckerhoff Inc.
303 Second Street, Suite 700N
San Francisco, CA 94107

Bay Area Toll Authority
101 Eight Street
Oakland, CA 94607

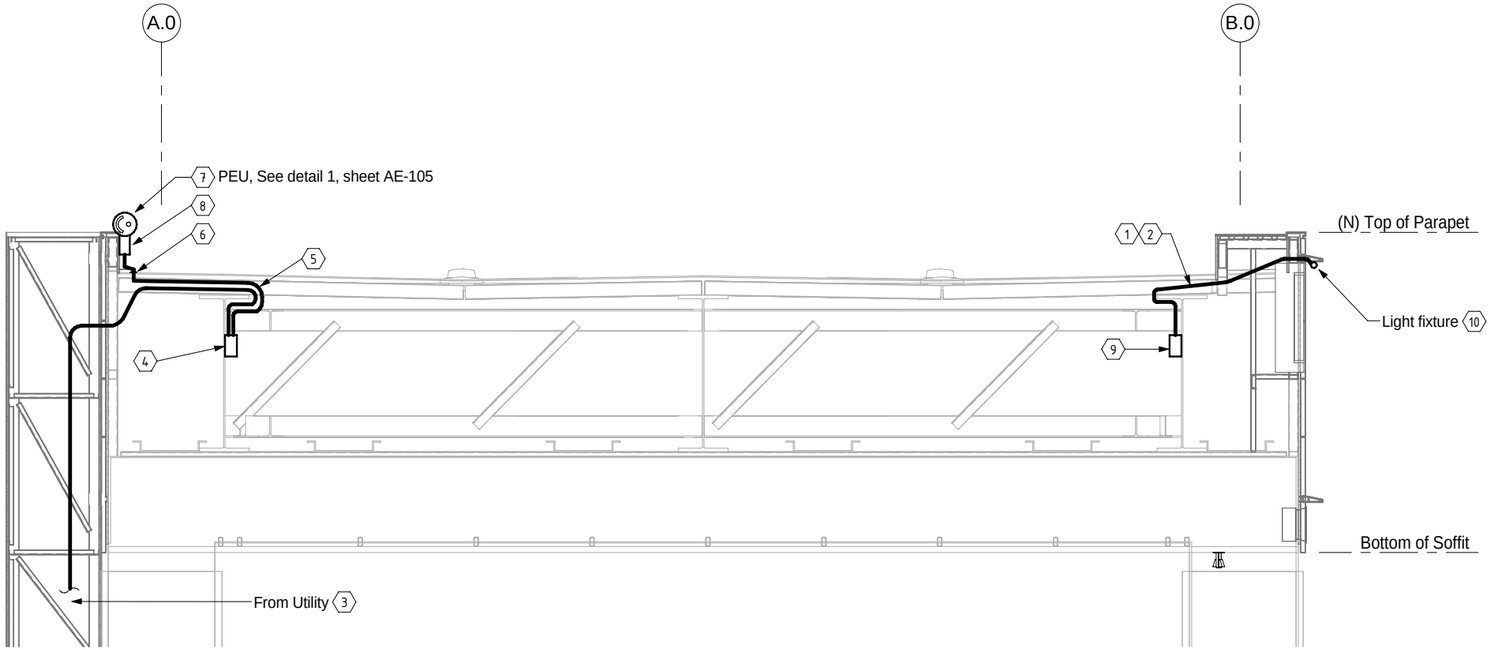

SECTION A-A

SCALE: 3/8" = 1'-0"

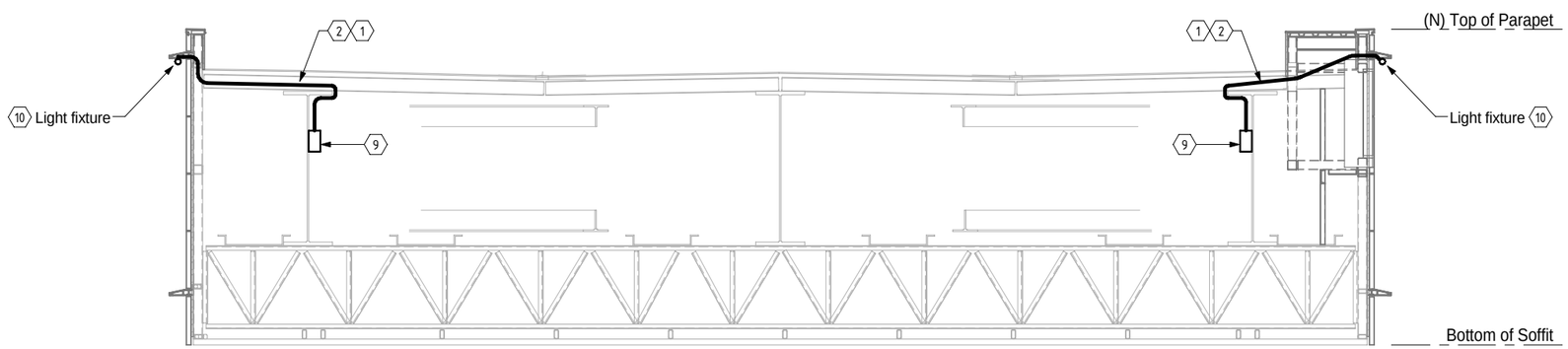

SECTION B-B

SCALE: 3/8" = 1'-0"

NOTES:

1. Prior to installation, contractor shall inspect and verify the associated components of the lighting fixture assembly.
2. Refer to Caltrans Standard Plans – Electrical System Installations Standards.

SHEET NOTES:

1. Light fixture cable to driver. Refer to drawing AE-105, Lighting Equipment list.
2. Fixture power cord cable shall be securely anchored in position to prevent any movement, without damaging the cable.
3. 1"C – 3#14 and 2#10 + #10G.
4. NEMA 4X junction box, 8" x 6" x 4" (Hoffman A-8064CHNFSS6 or approved equal), to be securely mounted on the vertical beam, see Detail 1 on drawing AE-105. The box shall be mounted in such a way that it is accessible and that the cover can be safely opened or removed.
5. 1"C – 3#14.
6. Roof penetration and flashing per architectural specifications (minimum 6" away from face of parapet on west side). New one inch conduit with 3 #14 conductor. Penetrate roof through a gray EPDM Boot with Stainless Steel Clamp, 4.8 x 4.8 base, 3 - 7/8" high, closed top.
7. Photocell on roof,(INTERMATIC model K4251, 4"H, 1 3/8" diameter with 6" leads or approved equal). Photocell shall be installed at 45 Degrees facing North. The Contractor shall coordinate with the Engineer.
8. Deep single gang metal box with two 1" hubs (Thomas & Betts FDC3-TB or approved equal) and one 1" to ½" reducing bushing (Garvin RB-10050 or approved equal).
9. LED driver enclosure box with removable backpan NEMA 4X, 14" x 12" x 6" (Hoffman A-1412CHNFSS6 and A-14P12SS or approved equal). The box shall be mounted in such a way that it is accessible and that the cover can be safely opened or removed.
10. For light fixture mounting, coordinate with architectural metal panel installation work and refer to light fixture manufacturer's instructions.

THIS PLAN IS ACCURATE FOR ELECTRICAL WORK ONLY.

AE-106

	BY	CHECKED
DESIGN	N. Najdi	L. Bergeron
DETAILS	L. Reyes	L. Bergeron
QUANTITIES		

PREPARED FOR THE STATE OF CALIFORNIA DEPARTMENT OF TRANSPORTATION

PROJECT ENGINEER

BRIDGE NO.

POST MILE

SFOBB TOLL PLAZA CANOPY RENOVATIONS
SECTION AND ELECTRICAL DETAILS

DESIGN GENERAL PLAN SHEET (ENGLISH) (REV. 06-01-09)

ORIGINAL SCALE IN INCHES FOR REDUCED PLANS 0 1 2 3

CU BATA011
EA 4G2801/4G2901

DISREGARD PRINTS BEARING EARLIER REVISION DATES

REVISION DATES (PRELIMINARY STAGE ONLY) -

SHEET 59 OF 64

C:\Documents and Settings\reyesl\My Documents\SFOBB-Canopy-Arch_reyesl.rvt

6/26/2012 3:46:03 PM

DIST.	COUNTY	ROUTE	POST MILES TOTAL PROJECT	SHEET NO.	TOTAL SHEETS
04	Ala	80	2.0/2.3	79	83

Syn Yee Chin
REGISTERED ELECTRICAL ENGINEER
06/26/2012
DATE

REGISTERED PROFESSIONAL ENGINEER
SYN YEE CHIN
No. 18186
Exp. 09/30/2013
ELECTRICAL
STATE OF CALIFORNIA

PLANS APPROVAL DATE

The State of California or its officers or agents shall not be responsible for the accuracy or completeness of electronic copies of this plan sheet.

Parsons Brinckerhoff Inc.
303 Second Street, Suite 700N
San Francisco, CA 94107

Bay Area Toll Authority
101 Eight Street
Oakland, CA 94607

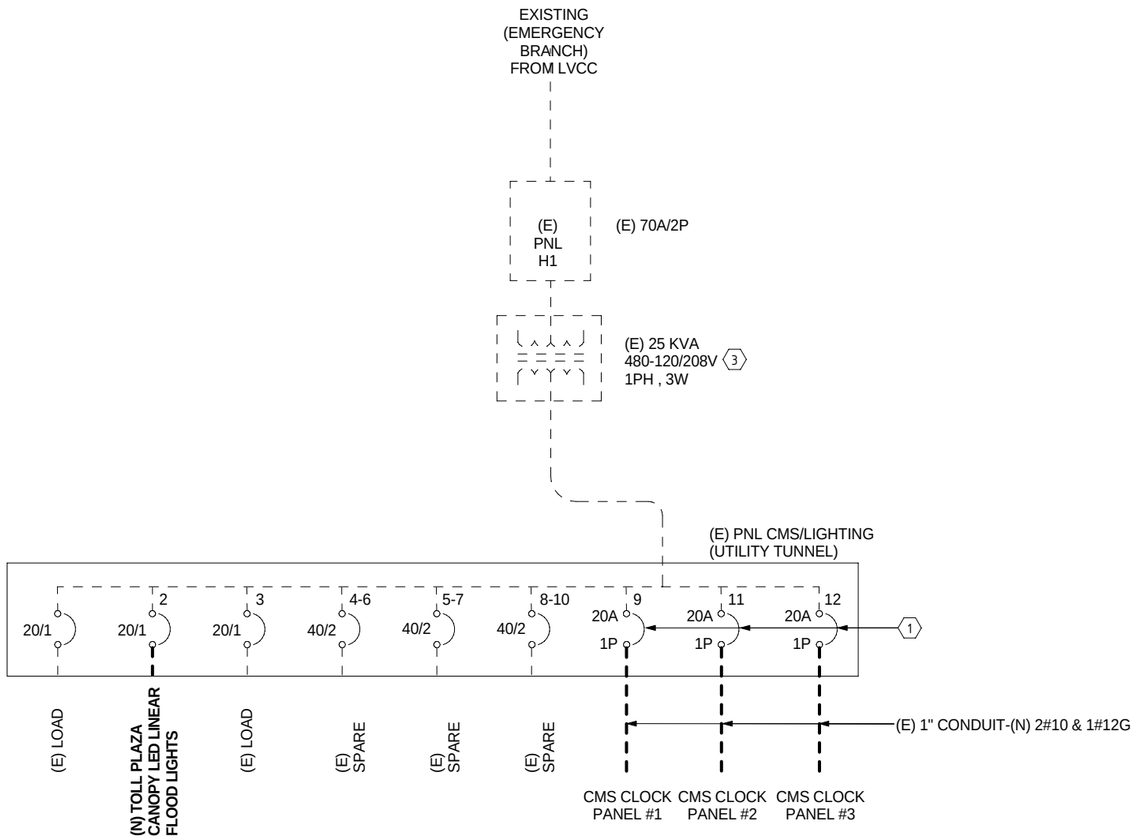

NOTES:

1. References:
   -For PNL CMS/LIGHTING panel schedule, see sheet AE-108.
2. For more information, see sheet AE-102, AE-103, and AE-104.

SHEET NOTES:

1. Contractor to verify the circuit breakers for CMS/CLOCKS #1, 2, 3, turn off, lock out and tag those breakers before disconnecting the cables from CMS/CLOCKS.
2. Verify existing 20A circuit breaker #2 is spare. This breaker shall be used for new LED linear floodlights on Toll Plaza Canopy.
3. The Contractor shall verify that the existing transformer is 480-120/240V for the existing 120/240V panel PNL-CMS/LIGHTING.

THIS PLAN IS ACCURATE FOR ELECTRICAL WORK ONLY.

AE-107

	BY	CHECKED
DESIGN	N. Najdi	L. Bergeron
DETAILS	L. Reyes	L. Bergeron
QUANTITIES		

PREPARED FOR THE STATE OF CALIFORNIA DEPARTMENT OF TRANSPORTATION

PROJECT ENGINEER

BRIDGE NO.
POST MILE

SFOBB TOLL PLAZA CANOPY RENOVATIONS
PARTIAL ONE LINE DIAGRAM

DESIGN GENERAL PLAN SHEET (ENGLISH) (REV. 06-01-09)

ORIGINAL SCALE IN INCHES FOR REDUCED PLANS 0 1 2 3

CU BATA011
EA 4G2801/4G2901

DISREGARD PRINTS BEARING EARLIER REVISION DATES

REVISION DATES (PRELIMINARY STAGE ONLY)

SHEET 60 OF 64

C:\Documents and Settings\reyesl\My Documents\SFOBB-Canopy-Arch_reyesl.rvt

6/26/2012 2:17:12 PM

DIST.	COUNTY	ROUTE	POST MILES TOTAL PROJECT	SHEET NO.	TOTAL SHEETS
04	Ala	80	2.0/2.3	80	83

Syn Yee Chin
REGISTERED ELECTRICAL ENGINEER
06/26/2012
DATE

PLANS APPROVAL DATE

REGISTERED PROFESSIONAL ENGINEER
SYN YEE CHIN
No. 18186
Exp. 09/30/2013
ELECTRICAL
STATE OF CALIFORNIA

The State of California or its officers or agents shall not be responsible for the accuracy or completeness of electronic copies of this plan sheet.

Parsons Brinckerhoff Inc.
303 Second Street, Suite 700N
San Francisco, CA 94107

Bay Area Toll Authority
101 Eight Street
Oakland, CA 94607

(1) (E) PNL-CMS/LIGHTING (2)(3)

LOCATION: UTILITY TUNNEL
(FED FROM PANEL H1 via 25 KVA XFMR)

LOAD DESCRIPTION	LTG.	G.P. REC	OTH.	CB AMP	CB POLE				CB AMP	CB POLE	LTG.	G.P. REC	OTH.	LOAD DESCRIPTION
(E) LOAD				20	1	1	A	2	20	1	**1.50**			**(N) TOLL PLAZA CANOPY LINEAR FLOOD LIGHTS (INCLUDING DRIVERS, PHOTOCELL, TEST SWITCH AND LIGHTING CONTACTOR)**
(E) LOAD				20	1	3	B	4	40					(E) SPARE
(E) SPARE				40		5	A	6		2				
					2	7	B	8	40					(E) SPARE
(E) CMS CLOCK PANEL #1			1.00	20	1	9	A	10		2				
(E) CMS CLOCK PANEL #2			1.00	20	1	11	B	12	20	1			1.00	(E) CMS CLOCK PANEL #3
TOTALS SECTION 1	0.00	0.00	2.00								**1.50**	0.00	1.00	

VOLTAGE:
120/240V

PHASE/WIRE:
1 PHASE, 3 WIRE

RATING:

MAINS:
225A-2P

MOUNTING:
SURFACE
A.I.C.:

BUS SIZE:

LOAD SUMMARY

CONNECT LOAD	DEMAND FACTOR	DEMAND LOAD
1.50	125% OF LOAD	**1.88**
0.00	NEC 220-13	0.00
3.00	1.00	**3.00**
4.50 KVA		**4.88** KVA
18.8 AMPS		**20.3** AMPS

BALANCE:	(KVA):	AMPS:
PHASE A:	**2.50**	**22.75**
PHASE B:	2.00	16.67

ADDITIONAL FEATURES:

NOTES:

1. References:
   - For partial single line diagram, see sheet AE-107.

SHEET NOTES:

(1) Panelboard is existing.

(2) Contractor to update panelboard schedule and provide a new revised type-written panelboard schedule. Attach removable circuit directory on the inside of panel door.

(3) Contractor to replace the existing panelboard nameplate with a new revised nameplate "PNL - CMS/LIGHTING"

THIS PLAN IS ACCURATE FOR ELECTRICAL WORK ONLY.

AE-108

	BY		CHECKED
DESIGN	N. Najdi		L. Bergeron
DETAILS	L. Reyes		L. Bergeron
QUANTITIES			

PREPARED FOR THE
STATE OF CALIFORNIA
DEPARTMENT OF TRANSPORTATION

PROJECT ENGINEER

BRIDGE NO.
POST MILE

SFOBB TOLL PLAZA CANOPY RENOVATIONS
PNL - CMS/LIGHTING PANELBOARD SCHEDULE

DESIGN GENERAL PLAN SHEET (ENGLISH) (REV. 06-01-09)

ORIGINAL SCALE IN INCHES FOR REDUCED PLANS 0 1 2 3

CU BATA011
EA 4G2801/4G2901

DISREGARD PRINTS BEARING EARLIER REVISION DATES

REVISION DATES (PRELIMINARY STAGE ONLY)

SHEET 61 OF 64

C:\Documents and Settings\reyesl\My Documents\SFOBB-Canopy-Arch_reyesl.rvt

6/26/2012 5:50:02 PM

DIST.	COUNTY	ROUTE	POST MILES TOTAL PROJECT	SHEET NO.	TOTAL SHEETS
04	Ala	80	2.0/2.3	81	83

REGISTERED ELECTRICAL ENGINEER — 06/26/2012 DATE

PLANS APPROVAL DATE

REGISTERED PROFESSIONAL ENGINEER — SYN YEE CHIN — No. 18186 — Exp. 09/30/2013 — ELECTRICAL — STATE OF CALIFORNIA

The State of California or its officers or agents shall not be responsible for the accuracy or completeness of electronic copies of this plan sheet.

Parsons Brinckerhoff Inc.
303 Second Street, Suite 700N
San Francisco, CA 94107

Bay Area Toll Authority
101 Eight Street
Oakland, CA 94607

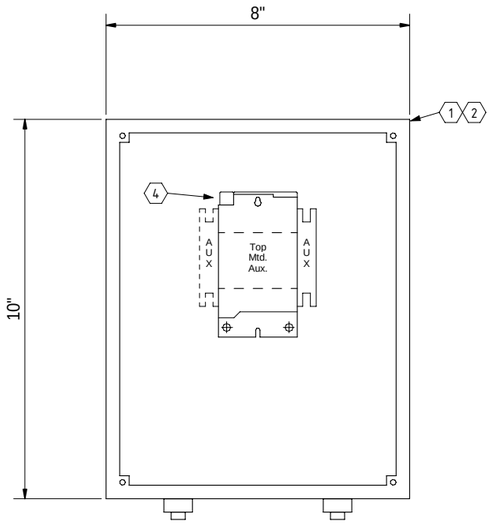

BACK PANEL MOUNTING LAYOUT

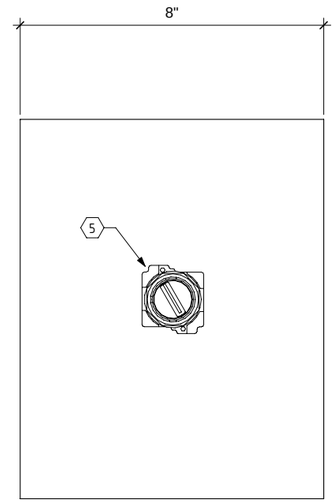

COVER MOUNTING LAYOUT

JB-A

LAMACOID NAMEPLATE

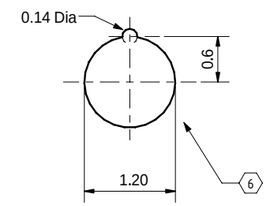

SELECTOR SWITCH DRILLING DIMENSIONS (INCHES)

NOTES:

1. References:
   - For lighting plan, see sheet AE-105.
   - For sections and electrical details, see sheet AE-102.
   - For junction box installation, refer to Caltrans Standard Plans – Electrical Systems installation
   - For electrical equipment installation, refer to manufacturer's installation instructions.

SHEET NOTES:

(1) NEMA 4X stainless steel junction box 10"H x 8"W x 4"D and removable backpan (Hoffman A-1008CHNFSS6 and A-10P8SS or approved equal).

(2) Lighting Control junction box JB-A shall be located inside Utility Tunnel, see AE-102, and AE-103.

(3) Individual ground wire to be bonded to the ground bus/clip inside the junction box.

(4) Lighting contactor (EATON CN35BN2-B or approved equal), 2-Pole, 120 V and 60 Hz 20 A rated with normally open contacts.

(5) Three-position selector switch (EATON 10250T22KB or approved equal) 120 V, pf 0.3, 6A, AIC 1kA rated.

(6) Drill a 1.2 inch hole on the enclosure cover/door to mount the selector switch (locating nib hole or notch is 0.14 inch #29 drill).

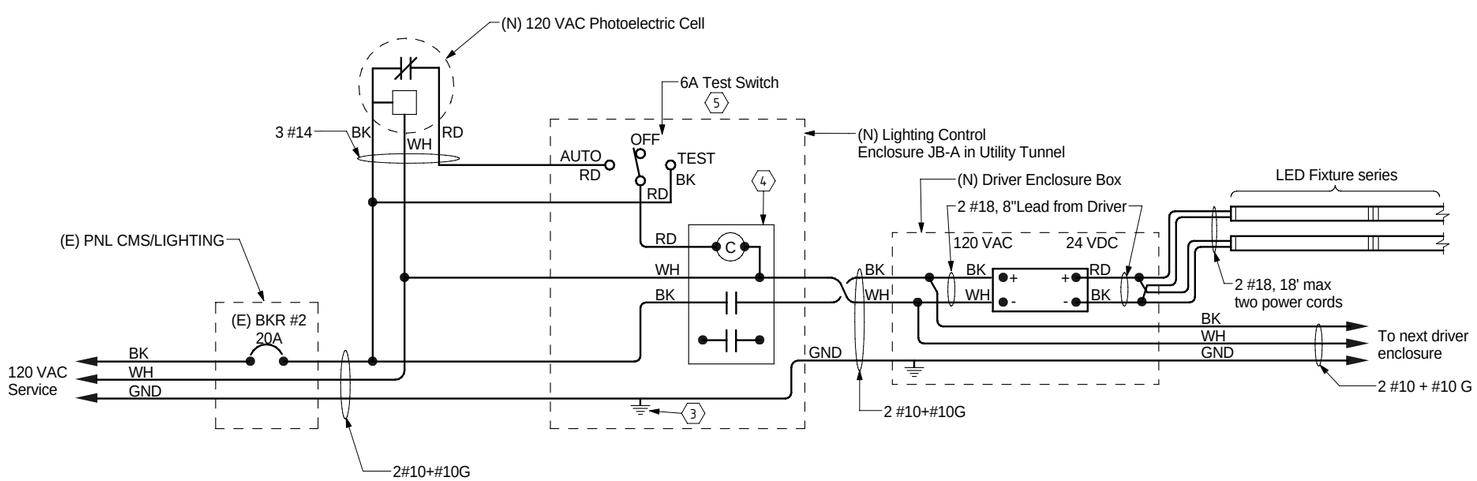

ELECTRICAL WIRING DIAGRAM

THIS PLAN IS ACCURATE FOR ELECTRICAL WORK ONLY.

AE-109

DESIGN	BY N. Najdi	CHECKED L. Bergeron	
DETAILS	BY L. Reyes	CHECKED L. Bergeron	
QUANTITIES	BY	CHECKED	

PREPARED FOR THE STATE OF CALIFORNIA DEPARTMENT OF TRANSPORTATION

PROJECT ENGINEER

BRIDGE NO.

POST MILE

SFOBB TOLL PLAZA CANOPY RENOVATIONS
ELECTRICAL WIRING DIAGRAM & CONTROL BOX

DESIGN GENERAL PLAN SHEET (ENGLISH) (REV. 06-01-09)

ORIGINAL SCALE IN INCHES FOR REDUCED PLANS 0 1 2 3

CU BATA011
EA 4G2801/4G2901

DISREGARD PRINTS BEARING EARLIER REVISION DATES

REVISION DATES (PRELIMINARY STAGE ONLY)

SHEET 62 OF 64

C:\Documents and Settings\reyesl\My Documents\SFOBB-Canopy-Arch_reyesl.rvt

6/27/2012 10:16:48 AM

DIST.	COUNTY	ROUTE	POST MILES TOTAL PROJECT	SHEET NO.	TOTAL SHEETS
04	Ala	80	2.0/2.3	82	83

Syn Yee Chin
REGISTERED ELECTRICAL ENGINEER
06/26/2012
DATE

REGISTERED PROFESSIONAL ENGINEER
SYN YEE CHIN
No. 18186
Exp. 09/30/2013
ELECTRICAL
STATE OF CALIFORNIA

PLANS APPROVAL DATE

The State of California or its officers or agents shall not be responsible for the accuracy or completeness of electronic copies of this plan sheet.

Parsons Brinckerhoff Inc.
303 Second Street, Suite 700N
San Francisco, CA 94107

Bay Area Toll Authority
101 Eight Street
Oakland, CA 94607

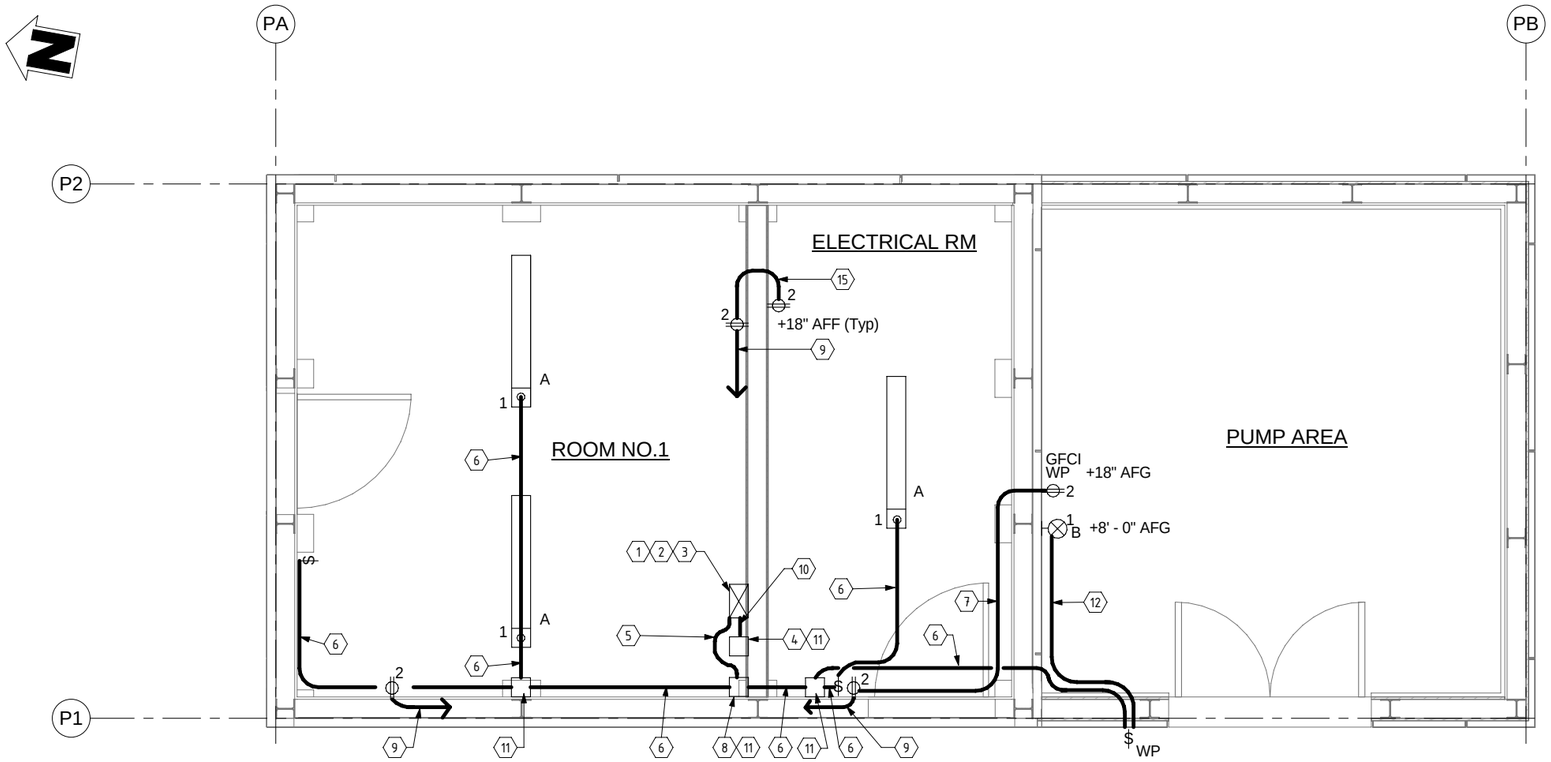

ELECTRICAL PLAN

SCALE: 1/2" = 1'-0"

PUMP STATION BUILDING LIGHTING FIXTURE SCHEDULE

TYPE	DESCRIPTION	MANUFACTURER & CATALOG NUMBER	FIXTURE QUANTITY	LAMP DATA		VOLTS	REMARKS
				QTY/FIXTURE	WATTS		
A	SURFACE MOUNTED FLUORESCENT LIGHT WITH TWO 44 W T8 LAMPS (4 FT LENGTH) UL LISTED DAMP LABEL WITH ELECTRONIC BALLAST.	LITHONIA DMS 2 48T8HO MVOLT GEB10RS OR APPROVED EQUAL	3	2	44	120	VERIFY MOUNTING REQUIREMENTS IN FIELD
B	WALL - MOUNTED FLUORESCENT LIGHT WITH ONE 13 W LAMP. UL LISTED WET LABEL WITH ELECTRONIC BALLAST.	LITHONIA OSC 13F 120 PLP BL M6 OR APPROVED EQUAL	1	1	13	120	

NOTES:

1. Ensure that the pump station building is de-energized from the source of power before re-connecting/re-setting the electrical equipment.
2. Contractor to replace all existing cables, and conduits to electrical equipment
3. All receptacles shown on this drawing are Duplex Receptacles with box. One duplex receptacle in pump area shall be weather proof with box and cover.
4. All switches shall be FD single gang box switches. One switch in pump area shall be weather proof.
5. References:
   - For lighting and receptacle wirings, see sheet AE-111.
   - For details, see architectural plans.

SHEET NOTES:

1. Existing Control Box #3 exists inside Room No. 1.
2. To allow for addition of new loads (lights, and receptacles) to existing Control Box #3, contractor shall first perform the following steps in the order presented below before adding the new loads (lights, and receptacles):
   - Check and confirm the operability and integrity of existing circuit breakers.
   - Turn off, lock out and tag circuit breakers #1 and 2 (inside Control Box #3) and then disconnect the existing cables to those breakers.
   - Connect a new cable 2#10 + 10G to breaker #1 and a new cable 2 #12 + 12G to breaker #2
3. New load (lights and receptacles) on Control Box #3 shall be 18 Amps or less.
4. Wall-mounted junction box, JB-B, shall be used to splice power cable from circuit breaker #2 with cables to receptacles.
5. 1" conduit, one 2#10 + 10G cable from circuit breaker #1 inside Control Box #3. Run the conduit on ceiling adjacent to wall.
6. 1" conduit, one 2#10 + 10G cable. Run the conduit on ceiling adjacent to wall.
7. 1" conduit, one 2#12 + 12G cable. Run the conduit at 18" above finished floor.
8. Wall-mounted junction box, JB-C, shall be used to splice power cable from circuit breaker #1 with cables to lights.
9. Home run to Junction box, JB-C, 1" conduit, 2#12 + 12G. Run conduit at + 18" above finished floor.
10. 1" conduit, one 2#12 + 12G cable from circuit breaker #2 inside Control Box #3.
11. Metal FD single gang splice box with 1" hubs.
12. 1"conduit Type 2, 2#10 + 10G.

THIS PLAN IS ACCURATE FOR ELECTRICAL WORK ONLY.

AE-110

	BY	CHECKED
DESIGN	N. Najdi	L. Bergeron
DETAILS	L. Reyes	L. Bergeron
QUANTITIES		

PREPARED FOR THE STATE OF CALIFORNIA DEPARTMENT OF TRANSPORTATION

PROJECT ENGINEER

BRIDGE NO.

POST MILE

SFOBB TOLL PLAZA CANOPY RENOVATIONS

PUMP STATION BUILDING - ELECTRICAL PLAN

DESIGN GENERAL PLAN SHEET (ENGLISH) (REV. 06-01-09)

ORIGINAL SCALE IN INCHES FOR REDUCED PLANS 0 1 2 3

CU BATA011
EA 4G2801/4G2901

DISREGARD PRINTS BEARING EARLIER REVISION DATES

REVISION DATES (PRELIMINARY STAGE ONLY)

SHEET 63 OF 64

C:\Documents and Settings\reyesl\My Documents\SFOBB-Canopy-Arch_reyesl.rvt

6/26/2012 2:17:13 PM

DIST.	COUNTY	ROUTE	POST MILES TOTAL PROJECT	SHEET NO.	TOTAL SHEETS
04	Ala	80	2.0/2.3	83	83

REGISTERED ELECTRICAL ENGINEER — 06/26/2012 DATE

PLANS APPROVAL DATE

REGISTERED PROFESSIONAL ENGINEER — SYN YEE CHIN — No. 18186 — Exp. 09/30/2013 — ELECTRICAL — STATE OF CALIFORNIA

The State of California or its officers or agents shall not be responsible for the accuracy or completeness of electronic copies of this plan sheet.

Parsons Brinckerhoff Inc.
303 Second Street, Suite 700N
San Francisco, CA 94107

Bay Area Toll Authority
101 Eight Street
Oakland, CA 94607

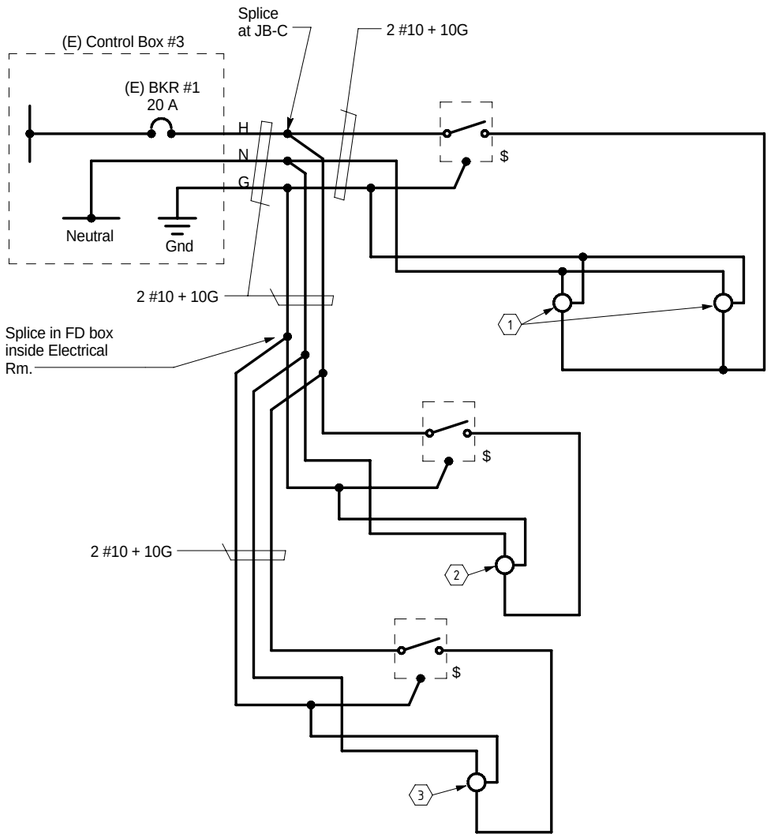

120V LIGHTING WIRING DIAGRAM

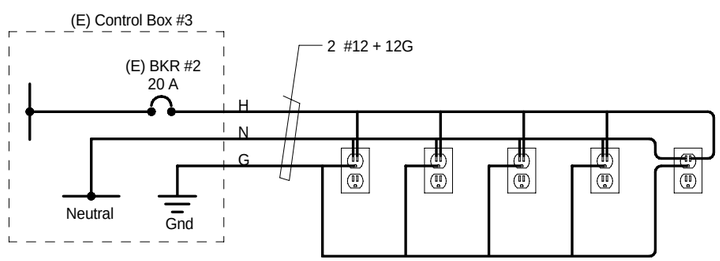

120V RECEPTACLE WIRING DIAGRAM

NOTES:

1. References:
   - For pump station electrical plan, see sheet AE-110.

SHEET NOTES:

1. Fluorescent fixture located inside Room No. 1 (Refer to sheet AE-110).
2. Fluorescent fixture located inside Electrical Room (Refer to sheet AE-110).
3. Outdoor lamp located in pump area (Refer to sheet AE-110).

THIS PLAN IS ACCURATE FOR ELECTRICAL WORK ONLY.

AE-111

	BY	CHECKED
DESIGN	N. Najdi	L. Bergeron
DETAILS	L. Reyes	L. Bergeron
QUANTITIES		

PREPARED FOR THE STATE OF CALIFORNIA DEPARTMENT OF TRANSPORTATION

PROJECT ENGINEER

BRIDGE NO.

POST MILE

SFOBB TOLL PLAZA CANOPY RENOVATIONS
PUMP STATION BUILDING - ELECTRICAL WIRINGS

DESIGN GENERAL PLAN SHEET (ENGLISH) (REV. 06-01-09)

ORIGINAL SCALE IN INCHES FOR REDUCED PLANS 0 1 2 3

CU BATA011
EA 4G2801/4G2901

DISREGARD PRINTS BEARING EARLIER REVISION DATES

REVISION DATES (PRELIMINARY STAGE ONLY) -

SHEET 64 OF 64

C:\Documents and Settings\reyesl\My Documents\SFOBB-Canopy-Arch_reyesl.rvt

6/26/2012 3:48:22 PM