Electric & Gas Service Requirements

2016

Visit us at

www.pge.com/greenbook

Pacific Gas and Electric Company™

WE DELIVER ENERGY.℠

Pacific Gas and Electric Company (PG&E)
Electric and Gas Service Requirements

Architects and Engineers

Electrical Contractors

Plumbing Contractors

City and County Building Inspectors

Manufacturers of Electrical Equipment

Pacific Gas and Electric Company Employees

2016 Edition

(Supersedes All Previous Editions and Revisions)

The *Electric and Gas Service Requirements* is a **guide to Pacific Gas and Electric Company (PG&E) requirements and policies** for establishing electric and gas service to **new** or **remodeled applicant installations.**

In addition to the utility requirements, **local or state officials may stipulate additional provisions for the installation of equipment and materials** that are in their authorized areas of responsibility and jurisdiction.

Should you have any questions regarding this manual, please call your local PG&E representative (see Table FM-1, "Service Planning Office Contact Information," starting on Page iv.).

Applicant gas and electric service and meter installation arrangements are subject to PG&E's review and approval. Applicants should contact their local PG&E representatives as soon in the planning process as possible.

NOTE: The acronym PG&E will be used throughout this manual to designate Pacific Gas and Electric Company.

Pacific Gas and Electric Company™

Notice: This Manual Is Subject to Change

Information and requirements in this manual are subject to change over time.

The online versions of the *Electric & Gas Service Requirements*, located at ***www.pge.com/greenbook***, are updated as quickly as possible when changes occur. The bound manual is not reprinted until the next scheduled print date regardless of changes in processes or requirements. Therefore, it is **imperative** that applicants for all gas and electric service projects consult the online version of this book (***www.pge.com/greenbook***) before finalizing project plans.

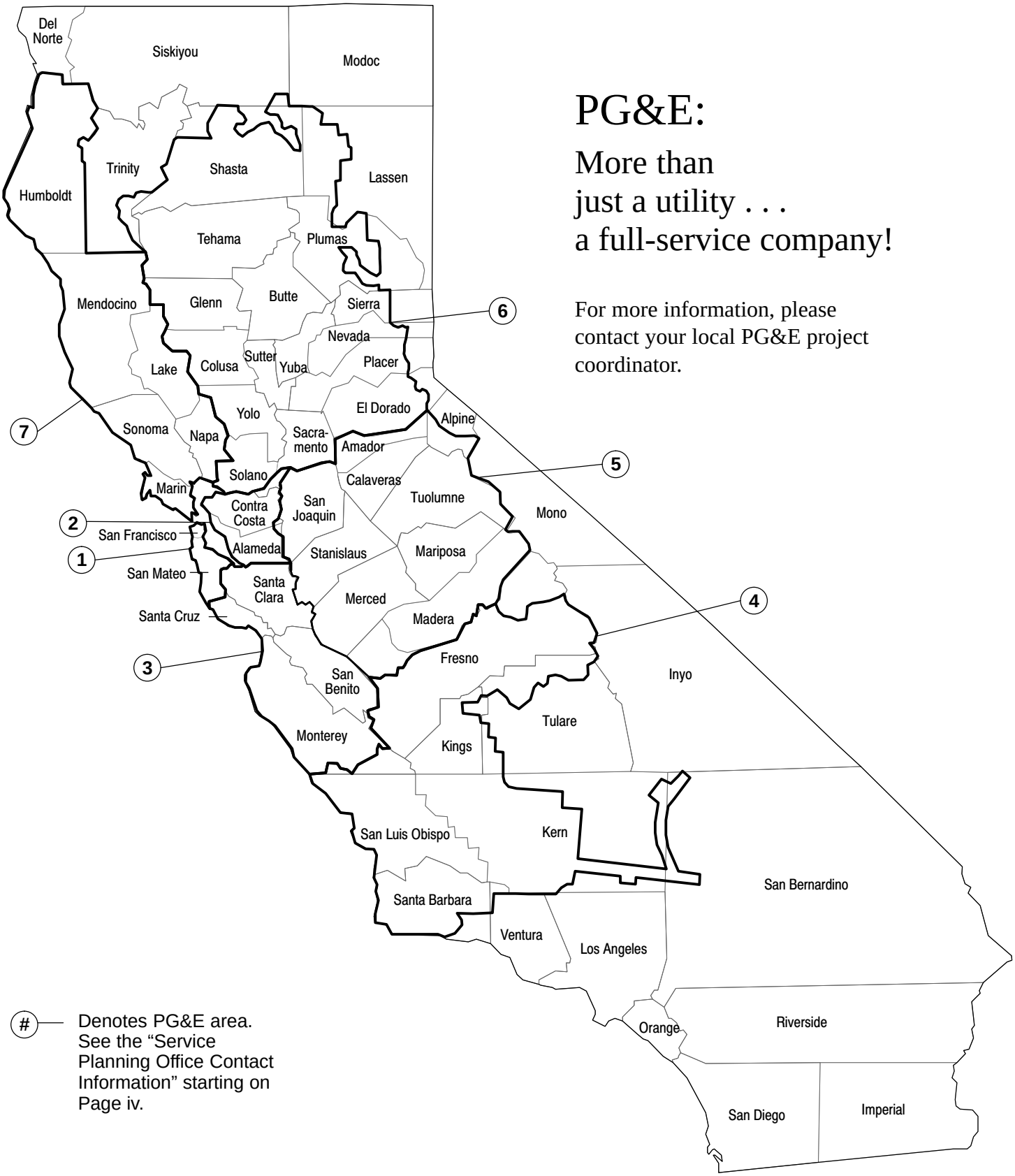

PG&E:

More than just a utility . . . a full-service company!

For more information, please contact your local PG&E project coordinator.

(#) Denotes PG&E area. See the "Service Planning Office Contact Information" starting on Page iv.

Pacific Gas and Electric Company™

Table FM-1 Service Planning Office Contact Information

Service Planning Office Contact Information						
PG&E Area	Local Headquarters	Address	Zip Code	External Phone Number	Inspection Desk	
					Phone	Email Address
5	Angels Camp	1108 Murphys Grade Rd	95222	(209) 942−1495	(209) 942-1495 (209) 942-1408	EDLHCCDStockon@pge.com
2	Antioch	2111 Hillcrest Ave	94509	(925) 779−7757	(925) 779-7757 (925) 779-7750	EDLHCCDAntioch@pge.com
6	Auburn	333 Sacramento St	95603	(530) 889−3270	(530) 889-3271 (530) 889-5165 (530) 889-5183	EDLHCCDAuburn@pge.com
4	Bakersfield	4101 Wible Rd	93313	(661) 398−5931	(661) 398-3989 (661)398-5864	EDLHCCDKern@pge.com
6	Chico	460 Rio Lindo Ave	95926	(530) 894−4749	(530) 894-4734 (530) 894-4414	EDLHCCDChico@pge.com
2	Concord	1030 Detroit Ave	94518	(925) 674−6457	(925) 779-7757 (925) 779-7750	EDLHCCDAntioch@pge.com
3	Cupertino	10900 N. Blaney	95014	(408) 725−3325	(408) 725-2202 (408) 725-7773	EDLHCCDDeAnza@pge.com
4	Dinuba	8058 Union St	93618	(559) 591−2314	(559) 263-7400 (559) 263-5488	EDLHCCDFresno@pge.com
7	Eureka	2555 Myrtle Ave	95501	(707) 445−5533	(707) 445-5533 (707) 445-5528	EDLHCCDHumboldt@pge.com
2	Fremont	41800 Boscell Rd	94538	(510) 784-3210	(510) 784-3317 NA	MissionInspections@pge.com
4	Fresno	705 P St, 2nd Floor	93760	(559) 263−7400	(559) 263-7400 (559) 263-5488	EDLHCCDFresno@pge.com
6	Grass Valley	788 Taylorville Rd	95949	(530) 477−3244	(916) 201-0168 (530) 477-3269	CCDGrassValleyInspec@pge.com
2	Hayward	24300 Clawiter Rd	94545	(510) 784−3210	(510) 784-3317 NA	MissionInspections@pge.com
5	Jackson	12626 Jackson Gate Rd	95642	(209) 942−1495	(209) 942-1495 (209) 942-1408	EDLHCCDStockon@pge.com
2	Liverrmore	998 Murietta Blvd	94550	(925) 373−2620	(510) 784-3317 NA	MissionInspections@pge.com
5	Madera	2871 Airport Dr	93637	(559) 675−2220	(209) 726-6373 (209) 726-6446	EDLHCCDStockon@pge.com
5	Manteca	226 E. Yosemite St	95336	(209) 942−1495	(209) 942-1495 (209) 942-1408	EDLHCCDStockton@pge.com
5	Mariposa	5166 Jones St	95338	(209) 966−3446	(800) 564-5080 (209) 726-7641	EDLHCCDYosemite@pge.com

Service Planning Office Contact Information, continued						
PG&E Area	Local Headquarters	Address	Zip Code	External Phone Number	Inspection Desk	
					Phone	Email Address
6	Marysville	29 4th St	95901	(530) 634−6442	(530) 634-6442 (530) 634-6475	EDLHCCDMarysville@pge.com
5	Merced	3185 M St	95348	(800) 564−5080	(209) 726-6373 (209) 726-6446	EDLHCCDStockton@pge.com
5	Modesto	1524 N. Carpenter Rd	93637	(800) 564−5080	(209) 726-6373 (209) 726-6446	EDLHCCDStockton@pge.com
3	Monterey	2311 Garden Rd	93940	(831) 648-3224	(831) 784-3614 (831) 648-3252	CentralCoastInspect@pge.com
7	Napa	1850 Soscol Ave, Suite 105	94559	(707) 257−5918	(707) 257-5918 (707) 257-5938	NA
5	Oakhurst	50150 Rd 426	93644	(800) 564−5080	(209) 726-6373 (209) 726-6446	EDLHCCDYosemite@pge.com
2	Oakland	4801 Oakport St	94601	(510) 437−2233	(510) 437-2616 (510) 437-2144	EDLHCCDOakport@pge.com
6	Placerville	4636 Missouri Flat Rd	95667	(530) 621−7265	(530) 621-7265 (530) 621-7258	EDLHCCDPlacerville@pge.com
6	Redding	3600 Meadow View Dr	96002	(530) 246−6537	(530) 246-6546 (530) 246-6541	EDLHCCDRedding@pge.com
2	Richmond	1100 S. 27th St	94804	(510) 231−2852	(510) 231-2939 (510) 231-2872	EDLHCCDRichmond@pge.com
6	Sacramento	5555 Florin Perkins Rd	95826	(916) 386−5112	(916) 386-5112 (916) 386-5288	EDLHCCDSacramento@pge.com
3	Salinas	401 Work St	93901	(831) 784−3614	(831) 784-3614 (831) 784-3634	CentralCoastInspect@pge.com
1	San Carlos	275 Industrial Rd	94070	(650) 598−7204	(650) 598-7271 (650) 598-7297	EDLHCCDPeninsula@pge.com
1	San Francisco	2180 Harrison St	94110	(415) 695−3500	(415) 695-3500 (415) 695-3525	NA
3	San Jose	308 Stockton Ave	95126	(408) 299−9500	(408) 299-1024 (408) 299-1087	EDLHCCDSanJose@pge.com
4	San Luis Obispo	4325 Higuera	93401	(805) 546−5247	(805) 546-5247 NA	NA
7	San Rafael	1220 Andersen Dr	94901	(415) 257−3431	(415) 257-3130 (415) 257-3429	NA
3	Santa Cruz	615 7th Ave	95062	(831) 479−3114	(831) 784-3614 (831) 479-3115	CentralCoastInspect@pge.com
4	Santa Maria	2445 Skyway Dr	93455	(805) 346−2241	(805) 546-5247 NA	NA

Service Planning Office Contact Information, continued						
PG&E Area	Local Headquarters	Address	Zip Code	External Phone Number	Inspection Desk	
					Phone	Email Address
7	Santa Rose	3965 Occidental Rd	95401	(707) 579−6476	(707) 579-6418 (707) 579-6418	EDLHCCDSantaRosa@pge.com
4	Selma	2139 Sylvia St	93662	(559) 891−2143	(559) 263-7400 (559) 263-5488	EDLHCCDFresno@pge.com
5	Stockton	4040 West Ln	95204	(209) 942−1495	(209) 942-1495 (209) 942-1408	EDLHCCDStockton@pge.com
4	Templeton	160 Cow Meadow Pl	93446	(805) 434−4460	(805) 546-5247 NA	NA
7	Ukiah	2641 N. State St	95482	(707) 468−3914	(707) 468-3914 (707) 468-3967	EDLHCCDUkiah@pge.com
6	Vacaville	158 Peabody Rd	95688	(707) 449−5720	(707) 449-5720 (707) 449-5774	EDLHCCDVacaville@pge.com
6	Woodland	242 N. West St	95695	(530) 661−5609	(530) 661-5609 (530) 661-5652	EDLHCCDWoodland@pge.com

Customer Quick Reference Notes	
Greenbook **Section Number, Title, and/or Topic**	**Page #**

Customer Quick Reference Notes, continued	
Greenbook **Section Number, Title, and/or Topic**	**Page #**

Table of Contents

Contents Page

Notice: This Manual Is Subject to Change ii

Service Planning Office Contact Information iv

Section 1 General 1-1

1.1. Purpose 1-2

1.2. Permits and Inspections 1-3

1.3. Applying for Building and Renovation Services 1-3

1.4. Changes in Requirements 1-5

1.5. Additional Commercial and Industrial Service Information 1-6

1.6. Design and Construction 1-6

1.6.1. PG&E's Responsibilities 1-6

1.6.2. Applicant's Responsibilities 1-6

1.6.3. Providing Access to PG&E Electric Facilities 1-7

1.6.4. Installing Transformers 1-7

1.7. Connecting and Sealing Services 1-7

1.8. Access to an Applicant's Residence, Building, or Property 1-8

1.9. Overhead Electric Lines 1-9

1.10. Underground Electric Lines and Gas Pipelines 1-10

1.11. PG&E Safety Training Resources 1-10

1.12. SmartMeter™ Program 1-10

1.13. PG&E Online (Website) 1-10

1.13.1. Electric and Gas Service Requirements Manual (aka Greenbook) 1-11

1.13.2. Rates and Tariffs 1-11

Contents Page

Section 1 General, continued

1.14. Determining the Service Rating 1-11

1.15. Changing an Applicant's Approved Project or Existing Service Loads 1-12

1.15.1. Upgrading, Replacing, Relocating Electric Facilities, or Adding Power Generation Sources 1-13

1.16. Standard Residential Service Voltage 1-14

1.16.1. Single-Phase Service 1-14

1.16.2. Three-Phase Service 1-14

1.16.3. Mixed-Use Projects 1-15

Section 2 Gas Service 2-1

2.1. Scope 2-1

2.2. Procedures for Establishing Gas Service 2-1

2.2.1. Establishing New Gas Service 2-1

2.2.2. Relocating or Adding Load to an Existing Service 2-4

2.3. Gas Service Lateral 2-4

2.3.1. General 2-5

2.3.2. Branch Service Pipe 2-10

2.3.3. Curb Valves 2-10

2.3.4. Joint Utility Service Trenches 2-11

2.3.5. Multiple Buildings Located on One Lot 2-14

2.3.6. Mobile Home Parks 2-17

2.4. Set Requirements for Gas Meters 2-18

2.4.1. Gas Pressure 2-18

2.4.2. Gas Meter-Set Locations 2-19

Contents Page

Section 2 Gas Service, continued

2.5. Applicant-Owned and Installed Gas Service Piping (e.g., Houseline), Valves, and Automatic Shut-Off Devices 2-42

2.5.1. Service Delivery Point For the Gas Supply 2-43

2.5.2. Applicant-Owned Riser and Pipe 2-44

2.5.3. Electrically Bonding and Grounding Gas Pipe 2-46

2.5.4. Applicant-Owned Protective Equipment 2-46

Section 3 Electric Service: Underground 3-1

3.1. Scope 3-1

3.2. General Information 3-1

3.2.1. Safety Reminder 3-1

3.2.2. Establishing Underground Electric Service Responsibilities 3-2

3.2.3. Installing Ground Rods 3-4

3.2.4. Installing Equipment Pads 3-4

3.2.5. Installing Overhead and Underground Service for Two or More Buildings on One Lot 3-4

3.2.6. Inspecting and Approving Overhead and Underground Services . . . 3-5

3.3. Underground Service Installation Requirements 3-5

3.3.1. Installing Services From Underground Distribution Systems 3-5

3.3.2. Installing Services From Overhead Distribution Systems 3-6

3.3.3. Installing Conduit for Underground Service 3-7

3.3.4. Installing PG&E-Only Service Trenches 3-8

3.3.5. Installing Offsets 3-9

3.3.6. Selecting Backfill 3-10

3.3.7. Providing Drainage From the Conduit System 3-10

3.3.8. Installing Joint Utility Service Trenches 3-11

3.3.9. Providing a Service-Termination Facility 3-13

3.3.10. Bioswales and Large Wet Locations 3-14

Contents Page

Section 3 Electric Service: Underground, continued

3.4. Electric Underground Documents 3-14

3.4.1. Mandrels 3-15

Section 4 Electric Service: Overhead 4-1

4.1. Scope 4-1

4.2. General 4-1

4.2.1. Safety Reminder 4-1

4.3. Locating Overhead Services 4-1

4.3.1. Point of Attachment 4-1

4.3.2. Two or More Buildings on One Lot 4-3

4.4. Service Drop Clearances 4-3

4.4.1. Vertical Clearance for Residential, Overhead Service 4-4

4.4.2. Clearance Above Buildings 4-7

4.4.3. Clearance at the Residential Point of Attachment 4-8

4.4.4. Vertical Clearance on Nonresidential Property 4-10

4.4.5. Clearances for a Nonresidential Building Service Drop Using Cable or Equally Insulated, Open-Wire Service Conductors 4-11

4.4.6. Clearances Around Doors and Windows 4-14

4.4.7. Clearance Between Service Drop Wires 4-14

4.4.8. Clearance From Applicant-Owned Service Poles 4-15

4.5. Service Attachments 4-15

4.5.1. Attaching Low-Voltage, Residential, Overhead Service Drops 4-15

4.5.2. Attaching Low-Voltage, Nonresidential, Overhead Service Drops 4-17

4.5.3. Special Service Attachment Requirements: Areas Subject to Heavy Snow Loading 4-19

Contents Page

Section 4 Electric Service: Overhead, continued

4.6. Attachment Structures (Periscopes) 4-21

4.6.1. Periscope Clearances and Bracing Requirements 4-22

4.7. Service Weatherheads 4-23

4.8. Service-Entrance Conductors 4-24

4.9. Applicant-Owned, Installed, or Furnished Wood Poles 4-25

4.10. Required Vegetation Clearances 4-26

4.10.1. General Requirements 4-26

4.10.2. Planning Requirements 4-28

4.10.3. Existing Overhead Lines Adjacent to Developments 4-29

4.10.4. Line Extensions 4-29

4.10.5. Primary Overhead Distribution Poles in Commercial Orchard Installations 4-30

4.10.6. Removing Vegetation Near Existing, High-Voltage, Energized Lines 4-30

Section 5 Electric Metering: General 5-1

5.1. Scope 5-1

5.2. General Conditions and Responsibilities 5-1

5.2.1. Approved Metering and Service Termination Equipment 5-1

5.2.2. Drawing Submittal Requirements for Metering and Service Termination Equipment 5-1

5.2.3. Applicant Responsibilities 5-2

5.2.4. PG&E's Responsibilities 5-4

5.3. Electric Meters: General Location Requirements 5-4

5.3.1. Basic Meter Location Requirements 5-5

5.3.2. Prohibited Meter and Service Equipment Locations 5-5

Contents Page

Section 5 Electric Metering: General, continued

5.3.3. Locating and Grouping Multiple Meters 5-7

5.3.4. Electric Meter Rooms 5-7

5.4. Meter Heights, Clearances, Enclosures, and Protection 5-8

5.4.1. Meter Heights 5-8

5.4.2. Meter Cabinet Enclosure Clearances 5-9

5.4.3. Meter Set Clearance Requirements 5-10

5.4.4. Working Space 5-11

5.4.5. Barricades 5-13

5.4.6. Meter Protection 5-14

5.5. Meter Identification and Seals 5-14

5.5.1. Properly Identifying and Marking Meters 5-14

5.5.2. Sealing Meters and Metering Equipment 5-15

5.5.3. Locking Provisions 5-15

5.6. Meter Types and Connections 5-16

5.6.1. Using a Meter Socket Adapter for Overhead-to-Underground Conversion 5-18

5.6.2. Installing Non-Allowed and Unauthorized Customer Equipment 5-18

5.6.3. Fire-Pump Connections 5-18

5.7. Main Service Disconnects and Switching Sequences 5-20

5.7.1. Main Service Disconnects 5-20

5.7.2. Main Service Disconnect Switch Rated for Amperes Interrupting Capacity (AIC) 5-21

5.7.3. Arc Flash Assessment 5-21

5.7.4. Electronic Trip Circuit Breakers 5-21

5.7.5. Meter and Main Service Switch Sequence 5-22

Contents Page

Section 5 Electric Metering: General, continued

5.8. Grounding 5-24

5.9. Temporary Service 5-27

5.9.1. Temporary Service Using Permanent Service Panels 5-27

5.9.2. Temporary-Service Metering Pedestal 5-28

5.9.3. Temporary Plug-In Service 5-28

5.10. Connecting Non-Utility Power Sources to Utility Services 5-29

5.10.1. Specific Interconnection Requirements for Services Up to 600 Volts 5-29

5.10.2. Warning Statements and Labels for Interconnected Services 5-33

5.10.3. Violation 5-33

5.11. Plug-In Electric Vehicle Interconnections 5-34

Section 6 Electric Metering: Residential 6-1

6.1. Scope 6-1

6.2. Residential Electric Service: Specifications and Requirements 6-1

6.2.1. Service Classes 6-1

6.2.2. Test-Bypass Facilities 6-1

6.3. Residential Electric Metering Pedestals 6-2

6.4. Meter Locations 6-2

6.4.1. Installing Utility Services to Mobile Homes 6-3

6.5. Services 6-4

6.5.1. Single Meter: Underground Service 6-4

6.5.2. Single Meter: Overhead Service 6-9

6.5.3. Multiple Meters 6-12

Contents Page

Section 7 Electric Metering: Commercial, Industrial, and Agricultural 7-1

7.1. Scope 7-1

7.2. Service Specifications and Requirements 7-1

7.2.1. Permitted Types of Electric Service 7-1

7.2.2. Required Test-Bypass Facilities 7-1

7.2.3. Required Approvals for Meter Equipment Without Test-Bypass Facilities 7-2

7.2.4. Meter Locations 7-2

7.2.5. Services, 0 Amps Through 200 Amps, Single Applicant, Overhead and Underground 7-3

7.2.6. Services, Over 200 Amps, Single Applicant, Underground 7-5

7.2.7. Services, Over 200 Amps, Single Applicant, Overhead 7-9

7.2.8. Multi-Applicant Meter Installations 7-13

Section 8 Electric Metering: Direct Access 8-1

8.1. Scope 8-1

Section 9 Electric Metering: Components 9-1

9.1. Scope 9-1

9.2. Test Blocks for Self-Contained Metering, 0 Amps Through 225 Amps 9-1

9.3. Test Switch Mounting Base Detail 9-2

9.4. Separate CT Cabinet, 201 Amps and Above, Single Phase and Three Phase 9-3

9.5. CT Mounting Base, 201 Amps Through 400 Amps 9-4

9.6. Alternate CT Mounting Base, 3-Wire, One Phase or Three Phase 9-5

9.7. Bused CT Cabinet, 3-Wire Service, 201 Amps Through 800 Amps 9-6

Contents Page

Section 9 Electric Metering: Components, continued

9.8. Bused CT Cabinet, 4-Wire Service, 201 Amps−800 Amps 9-7

9.9. Meter Box for Transformer-Rated Metering 9-8

9.10. Underground Service Cable-Termination Section or Pull Box 9-10

9.11. Approved Service-Terminal Conductor Connectors 9-14

9.12. Underground-Service Auxiliary Pull Cabinet 9-15

9.13. Nonresidential Service Pedestals 0 - 200 Amps (EUSERC 308) 9-17

Section 10 Electric Switchboards: 0 Volts Through 600 Volts

10.1. Scope 10-1

10.2. General Requirements 10-1

10.3. Switchboard Service Section 10-2

10.3.1. Standard Switchboard Service Section 10-3

10.3.2. Specifically Engineered Switchboard Service Sections 10-3

10.3.3. Requirements for All Switchboard Service Sections 10-3

10.3.4. Standard Switchboard CT Compartment, 0 Amps Through 1,200 Amps, Single-Phase or Three-Phase, 3-Wire Service 10-6

10.3.5. Standard Switchboard CT Compartment, 0 Amps Through 1,200 Amps, Three-Phase, 3-Wire and 4-Wire Services 10-7

10.3.6. Standard Switchboard CT Compartment, 1,001 Amps Through 3,000 Amps, Single-Phase or Three-Phase, 3-Wire Service 10-8

10.3.7. Standard Switchboard, CT Compartment, 1,001 Amps Through 3,000 Amps, Three-Phase, 4-Wire Service 10-10

10.3.8. Standard Switchboard CT Compartment, 3,001 Amps and Larger, Three-Phase, 3-Wire Service 10-12

10.3.9. Standard Switchboard CT Compartment, 3,001 Amps and Larger, Three-Phase, 3-Wire or 4-Wire Service 10-14

10.3.10. Removable Link Assemblies 10-16

Contents Page

Section 10 Electric Switchboards: 0 Volts Through 600 Volts, continued

10.3.11. Standard Section for Self-Contained Meter Sockets, 0 Amps Through 225 Amps, Installed in Switchboards: Nonresidential 10-21

10.3.12. Service Terminations for Underground Services 10-23

10.3.13. Underground, Service-Termination Pull Section (Located Below Ground Level) 10-25

10.3.14. Underground, Cable-Terminating Facilities in Pull Boxes or Pull Sections 10-29

10.4. Meter and Switch Sequence Requirements 10-32

10.5. Meter Transformer Compartments 10-33

10.6. Meter Panels 10-33

10.7. Transformer-Rated and Self-Contained Switchboards 10-38

10.8. Adding New Metering Equipment to Existing Switchboards 10-39

Section 11 Electric Switchboards: 601 Through 25,000 Volts and Primary Services 11-1

11.1. Scope 11-1

11.2. General Requirements 11-1

11.3. Specific Requirements for High-Voltage Switchboards 11-2

11.4. Interconnection Requirements and Primary Services 11-10

Appendix A Acronyms and Glossary A-1

Appendix B Electric and Gas Service Documents B-1

Appendix C Electric and Gas Engineering Documents C-1

List of Tables

Contents | Page

Section 1 General

Table 1-1 USA Color Coding 1-1

Table 1-2 Minimum Safe Working Distances (Scaffolds, Equipment, Tools, Structures, and People) 1-9

Table 1-3 Minimum Safe Working Distances (Boom-Type Lifting or Hoisting Equipment) 1-9

Section 2 Gas Service

Table 2-1 Minimum Separation and Clearance Requirements for Trenches 2-12

Table 2-2 Dimensions to Figure 2-22 2-34

Section 3 Electric Service: Underground

Table 3-1 Minimum Separation and Clearance Requirements for Trenches 3-13

Table 3-2 Electric Underground Numbered Documents 3-14

Table 3-3 Mandrel Dimensions, Part Numbers, and Order Codes 3-17

Table 3-4 Businesses That Sell or Rent Mandrels 3-18

Section 4 Electric Service: Overhead

Table 4-1 Minimum Clearances Over Swimming Pools 4-6

Table 4-2 Minimum Allowable Clearance of Insulated Service Drops From Buildings – 0 Volts Through 750 Volts 4-7

Table 4-3 Vertical Clearance From the Ground on Nonresidential Property 4-10

Table 4-4 Maximum Distance “L” (Inches From the Service Attachment to the Top Periscope Support) 4-20

Table 4-5 Maximum Mast Height Above the Roof Without Bracing 4-22

Contents Page

Section 5 Electric Metering: General

Table 5-1 Meter Cabinet Enclosure Clearance Dimensions 5-9

Table 5-2 Working Space Dimensional Requirements 5-11

Table 5-3 Meter Socket Requirements (Number of Jaws) 5-17

Table 5-4 Requirements For AC Disconnect Switches 5-31

Section 6 Electric Metering: Residential

Table 6-1 Residential (0 Amps–225 Amps) Enclosure 6-5

Table 6-2 Dimension Specifications for Multimeter Installations 6-16

Section 9 Electric Metering: Components

Table 9-1 CT Cabinet Minimum Dimensions 9-3

Table 9-2 Hinged Meter Panel Requirements 9-9

Table 9-3 Minimum Wall-Mounted Pull-Section Dimensions: Residential and Nonresidential, Single-Phase or Three-Phase 9-11

Table 9-4 Minimum Pad-Mounted (Floor-Standing) Switchboard Pull-Section Dimensions: Residential and Nonresidential, Single-Phase and

Three-Phase 9-11

Table 9-5 Approved, Compression-Type, Service-Terminal Connectors 9-15

Table 9-6 Minimum Connection Cabinet Sizes 9-16

Table 9-7 Minimum Dimensions (Inches) 9-19

Section 10 Electric Switchboards: 0 Volts Through 600 Volts

Table 10-1 Minimum Bottom-Fed Pull-Section Dimensions 10-24

Table 10-2 Pull-Section Dimensions (Minimums) Below Ground Level 10-27

Contents Page

Section 10 Electric Switchboards: 0 Volts Through 600 Volts, continued

Table 10-3 Dual-Socket, Hinged, Meter-Panel Requirement 10-33

Table 10-4 Adding Up Meter Section Ampacities 10-40

Section 11 Electric Switchboards: 601 Through 25,000 Volts and Primary Services

Table 11-1 Bill of Materials for Concrete Pad 11-4

Table 11-2 Dimensions for High-Voltage Meter Enclosures 11-7

Appendix B Electric and Gas Service Documents

Table B-1 Plant Matrix for Stockton, Yosemite, Fresno, and Kern Divisions B-2

Table B-2 Plant Matrix for San Francisco, Peninsula, and DeAnza Divisions B-3

Table B-3 Plant Matrix for San Jose, Central Coast, and Los Padres Divisions . . B-4

Table B-4 Plant Matrix for North Valley, Sierra, and Sacramento Divisions B-5

Table B-5 Plant Matrix for Diablo, Mission, and East Bay Divisions B-6

Table B-6 Plant Matrix for North Coast and North Bay Divisions B-7

Table B-7 Do Not Plant These Trees Under or Within 15 Feet of Overhead Power Lines B-8

Appendix C Electric and Gas Engineering Documents

Table C-1 Gas Design Standards C-1

Table C-2 Electric Engineering Documents C-2

This Page Intentionally Left Blank

List of Figures

Contents Page

Section 2 Gas Service

Figure 2-1 Typical Gas Service Installation 2-6

Figure 2-2 Gas-Only Service Trench 2-9

Figure 2-3 Typical Gas Bell Hole−Plan View 2-9

Figure 2-4 Typical Bell Hole Depth−Profile View 2-9

Figure 2-5 Typical Joint-Service Trench 2-11

Figure 2-6 Separate Gas Services for Two Buildings on a Single Lot 2-14

Figure 2-7 Separate Gas Services for Two Buildings on a Corner Lot 2-15

Figure 2-8 Apartments With Grouped Meter Locations 2-16

Figure 2-9 Individually Metered Buildings 2-16

Figure 2-10 Property Line Installation 2-20

Figure 2-11 Acceptable Locations for Gas Meter Installations 2-22

Figure 2-12 Acceptable Meter Locations for Mobile Home Parks 2-23

Figure 2-13 Flex-Hose Meter Set–Residential and Small Commercial 2-24

Figure 2-14 Typical Residential Gas Meter Connection 2-26

Figure 2-15 Typical Gas Meter Connection for 400 to 1,000 Class Meters 2-27

Figure 2-16 Gas Meter Connection Using a 1.5M or 3M Rotary Gas Meter 2-28

Figure 2-17 Gas Meter Connection Using a 5M or 7M Rotary Gas Meter 2-29

Figure 2-18 Gas Meter Connection Using an 11M or 16M Rotary Gas Meter 2-30

Contents Page

Section 2 Gas Service, continued

Figure 2-19 Electric and Gas Meter Set Separation Dimensions and Clearances 2-31

Figure 2-20 Gas Meter Set Clearance From Building Openings 2-32

Figure 2-21 Gas Regulator Set Clearance Requirement from Sources of Ignition 2-33

Figure 2-22 Dimensions for Typical, Residential, Multimeter Installations 2-34

Figure 2-23 Recessed, Individual Meter Cabinet for Gas and Electric Meter Installations 2-36

Figure 2-24 Cabinet Dimensions for Multiple, Residential Gas Meters 2-37

Figure 2-25 Typical Detached Enclosure 2-38

Figure 2-26 Typical Enclosure Dimensions 2-39

Figure 2-27 Typical Residential, Multimeter Installations 2-44

Figure 2-28 Recommended, Applicant-Owned Riser and Pipe 2-45

Section 3 Electric Service: Underground

Figure 3-1 Locations of Underground Electric Service-Termination and Meter Facilities 3-3

Figure 3-2 Underground-to-Underground Service Connection 3-5

Figure 3-3 Overhead-to-Underground Service Connection 3-6

Figure 3-4 Typical Joint Service Trench 3-12

Figure 3-5 PG&E Electric and Gas Service Trench 3-12

Figure 3-6 Flexible Steel Mandrel 3-17

Contents Page

Section 4 Electric Service: Overhead

Figure 4-1 Preferred and Alternate Locations for the Overhead Service Drop Attachment 4-2

Figure 4-2 Ground Clearances for Supply Service Drops, 0 Volts Through 750 Volts, Residential Installations (Required by the CPUC) 4-4

Figure 4-3 Minimum Clearance for All Drops Above or Adjacent To Swimming Pools 4-6

Figure 4-4 Nonmetallic Roof 4-7

Figure 4-5 Clearance at the Residential Point of Attachment 4-9

Figure 4-6 Clearance at the Residential Point of Attachment 4-9

Figure 4-7 Clearance at the Residential Point of Attachment 4-9

Figure 4-8 Clearance at the Residential Point of Attachment 4-9

Figure 4-9 Clearance at the Residential Point of Attachment 4-9

Figure 4-10 Clearance at the Residential Point of Attachment 4-9

Figure 4-11 Clearance at the Residential Point of Attachment 4-9

Figure 4-12 Ground Clearances for Supply Service Drops, 0 Volts Through 750 Volts, Industrial and Commercial Installations (Required by the CPUC) 4-11

Figure 4-13 Clearances for Nonresidential Buildings Using Insulated Conductors (0 Volts−750 Volts) 4-13

Figure 4-14 Clearances for Nonresidential Buildings Using Insulated Conductors (0 Volts−750 Volts) 4-13

Figure 4-15 Clearances for Nonresidential Buildings Using Insulated Conductors (0 Volts−750 Volts)) 4-13

Contents Page

Section 4 Electric Service: Overhead, continued

Figure 4-16 Clearances for Nonresidential Buildings Using Insulated Conductors (0 Volts−750 Volts)) 4-13

Figure 4-17 Clearances for Nonresidential Buildings Using Insulated Conductors (0 Volts−750 Volts)) 4-13

Figure 4-18 Clearances for Nonresidential Buildings Using Insulated Conductors (0 Volts−750 Volts) 4-13

Figure 4-19 Clearances for Nonresidential Buildings Using Insulated Conductors (0 Volts−750 Volts) 4-13

Figure 4-20 Clearances for Nonresidential Buildings Using Insulated Conductors (0 Volts−750 Volts) 4-13

Figure 4-21 Clearance Around Windows 4-14

Figure 4-22 Clearance Around Doors 4-14

Figure 4-23 Service Attachment Structure or Service Pole Secured to a Building 4-15

Figure 4-24 Service Pole Detached From a Building 4-15

Figure 4-25 Open Wire 4-16

Figure 4-26 Open Wire or Cable (Open Wire Shown) 4-16

Figure 4-27 Open Wire or Cable (Open Wire Shown) 4-16

Figure 4-28 Cable (Using Triplex) 4-16

Figure 4-29 Cable (Single Spool) 4-16

Figure 4-30 Open Wire or Cable (Cable Shown) 4-16

Contents Page

Section 4 Electric Service: Overhead, continued

Figure 4-31 Service Drop Cable, 4/0 and Smaller, Triplex or Quadruplex 4-18

Figure 4-32 New Wall, 1/0 kcmil to 397.5 kcmil Aluminum 4-18

Figure 4-33 New or Existing Wall, 1/0 kcmil to 397.5 kcmil Aluminum 4-18

Figure 4-34 Open Wire Service, #4 to 397.5 kcmil Aluminum 4-18

Figure 4-35 Service Drop Cable 4-18

Figure 4-36 Building Attachment–Service Knob 4-20

Figure 4-37 Self-Supported Periscope Attachment Structure 4-20

Figure 4-38 Braced Periscope Attachment Structure 4-20

Figure 4-39 Unbraced Periscope Structure (Residential and Nonresidential) 4-23

Figure 4-40 Illustration of 15-Foot Clearance, Low-Growth Zone 4-27

Figure 4-41 Grass and Shrubs Recommended Under Service Wires 4-27

Figure 4-42 Grass and Shrubs Recommended Under Transmission Wires 4-27

Figure 4-43 Alternative Routes to a House Showing High-Voltage Lines and Tree-Clearance Zones 4-28

Figure 4-44 Development Area 4-29

Figure 4-45 High-Voltage Marker on Poles and Crossarms 4-31

Section 5 Electric Metering: General

Figure 5-1 Meter Cabinet Enclosure Clearances 5-9

Figure 5-2 Electric and Gas Meter Set Separation Dimensions and Clearances 5-10

Section 5 Electric Metering: General, continued

Figure 5-3 Semi-Flush Meter Installation 5-12

Figure 5-4 Enclosed Meter Installation 5-12

Figure 5-5 Preferred Location of Conduits for Indoor and Outdoor Meter Panels and Switchboards 5-13

Figure 5-6 Connection Diagrams for Self-Contained Meter Sockets 5-17

Figure 5-7 Connection Diagrams for Transformer-Rated Meter Sockets 5-17

Figure 5-8 Fire-Pump Equipment Location and Service Connection Options 5-20

Figure 5-9 Circuit Breakers with Electronic Trip Unit 5-22

Figure 5-10 Single Meter With Main Service Switch 5-23

Figure 5-11 Single Meter With Multiple Service Switches 5-23

Figure 5-12 Multimeter Installation Without Main Disconnect Switch 5-23

Figure 5-13 Multimeter Installation With Main Disconnect Switch 5-23

Figure 5-14 Multiple Remote Switchboard or Meter Panel Locations 5-24

Figure 5-15 Grounding Outside of the Sealed Section−Self Contained Meter 5-26

Figure 5-16 Grounding Outside of the Sealed Section−Transformer Rated Meter 5-26

Figure 5-17 Plug-In Temporary Service 5-27

Figure 5-18 Typical Plug-In Adapter 5-27

Figure 5-19 Temporary-Service Metering Pedestal 5-28

Figure 5-20 Transfer Switch 5-32

Contents Page

Section 6 Electric Metering: Residential

Figure 6-1 Residential Electric Metering Pedestal 6-2

Figure 6-2 Typical Underground Service-Termination Enclosure, Combination Meter-Socket Panel (Residential, 0 Amps−225 Amps) 6-5

Figure 6-3 Typical Service-Termination Enclosure, Combination Meter-Socket Panel for a Class 320 Meter (Residential, 120/240-Volt, 226-Amp Through 320-Amp Service) 6-6

Figure 6-4 Underground Combination Meter and Current-Transformer Cabinet (201 Amps−400 Amps, 1∅ or 3∅) 6-8

Figure 6-5 Typical Underground, Separate-Bused, Current-Transformer Cabinet and Safety-Socket Meter Box Assembly, (201 Amps−400 Amps, 3∅ and 201 Amps−800 Amps, 1∅) 6-8

Figure 6-6 Individual Meter Socket 6-9

Figure 6-7 Combination Meter Socket Load Center 6-9

Figure 6-8 Typical Service-Termination Enclosure, Combination Meter Socket Panel for a Class 320 Meter (Residential, 120/240-Volt, 226-Amp Through 320-Amp Service) 6-10

Figure 6-9 Overhead-Fed Combination Meter and Current-Transformer Cabinet, (201 Amps−400 Amps, 3∅ and 201 Amps−600 Amps, 1∅) 6-11

Figure 6-10 Overhead-Fed, Separate-Bused, Current-Transformer Cabinet and Meter Box (201 Amps−400 Amps, 3∅ and 201 Amps−600 Amps, 1∅) 6-12

Figure 6-11 Meter Sockets With Wiring Gutters 6-13

Figure 6-12 Typical, Manufactured, Combination, Multimeter Installation: Seven Meters or More 6-15

Figure 6-13 Clearances for a Typical, Manufactured, Combination, Multimeter Installation 6-16

Contents Page

Section 6 Electric Metering: Residential, continued

Figure 6-14 Horizontal Meter Trough Installation: Six Meters or Less 6-17

Figure 6-15 Vertical Meter Trough Installation: Five Meters or Less 6-17

Section 7 Electric Metering: Commercial, Industrial, and Agricultural

Figure 7-1 Bused, Safety-Socket Meter Box for Self-Contained Metering (0 Amps−125 Amps) 7-4

Figure 7-2 Bused, Safety-Socket Meter Box for Self-Contained Metering (126 Amps−200 Amps) 7-5

Figure 7-3 Underground Combination Meter and Current-Transformer Cabinet (201 Amps−400 Amps, 1∅ or 3∅) 7-7

Figure 7-4 Separate-Bused Current-Transformer Cabinet and Meter Box With Underground Service-Termination Pull Box (201 Amps−400 Amps, 3∅ and 201 Amps−600 Amps, 1∅) 7-8

Figure 7-5 Switchboard Pull Section 7-9

Figure 7-6 Separate Pull Box 7-9

Figure 7-7 Bottom-Fed Service Section 7-9

Figure 7-8 Overhead-Fed Combination Meter and Current-Transformer Cabinet, (201 Amps−400 Amps, 3∅ and 201 Amps−600 Amps, 1∅) 7-11

Figure 7-9 Overhead-Fed, Separate-Bused, Current-Transformer Cabinet and Safety-Socket Meter Box (201 Amps−400 Amps, 3∅, and 201 Amps−600 Amps, 1∅) 7-12

Figure 7-10 Overhead, Service-Termination, Standard Switchboard Service Section (0 Volts−600 Volts) 7-13

Figure 7-11 Overhead Service, Grouped-Meter Installation Without a Main Switch 7-14

Contents Page

Section 7 Electric Metering: Commercial, Industrial, and Agricultural, continued

Figure 7-12 Underground Service, Grouped-Meter Installation Without a Main Switch 7-14

Figure 7-13 Grouped-Meter Installation With a Main Switch 7-15

Section 9 Electric Metering: Components

Figure 9-1 Test Blocks for Self-Contained Metering, 0 Amps−225 Amps 9-2

Figure 9-2 Removable Test Switch Mounting-Base Detail 9-2

Figure 9-3 Cabinet Showing Stud-Mounted Cover 9-3

Figure 9-4 Cabinet Showing Flanged Cover Fastened by Sealable Rivet Latches 9-3

Figure 9-5 Cabinet Showing Hinged Front Cover 9-3

Figure 9-6 3-Wire, Single-Phase Service, Mounting Base 9-4

Figure 9-7 4-Wire, Three-Phase Service, Mounting Base 9-4

Figure 9-8 CT Mounting Base (Single-Phase or Three-Phase, 3-Wire, 201 Amps−600 Amps, 0 Volts−600 Volts) 9-5

Figure 9-9 Bused CT Cabinet, 3-Wire Service, 201 Amps−800 Amps 9-6

Figure 9-10 Bused CT Cabinet (4-Wire Service, 201 Amps−800 Amps) 9-7

Figure 9-11 Meter Box for Transformer-Rated Metering (Single-Phase or Three-Phase Installations) 9-8

Figure 9-12 Remote Metering Cabinet (Three-Phase Installations) 9-9

Figure 9-13 Typical Underground Service Termination Section and Pull Box, Wall-Mounted or Pad-Mounted (Floor-Standing) 9-12

Contents Page

Section 9 Electric Metering: Components, continued

Figure 9-14 Detail of Clearance Requirements for Adjacent Termination Bus Stubs 9-13

Figure 9-15 Detail of Aluminum, Termination Bus Stubs 9-13

Figure 9-16 Service-Terminal Conductor Connector 9-14

Figure 9-17 Cabinet Showing Stud-Mounted Cover 9-16

Figure 9-18 Cabinet Showing Flanged Cover Fastened by Sealable Rivet Latches 9-16

Figure 9-19 Cabinet Showing Hinged, Flanged Cover 9-16

Figure 9-20 Front View 9-19

Figure 9-21 Side View 9-19

Figure 9-22 Wireway Pull Section 9-19

Figure 9-23 Hinged Demand Reset Cover With Polycarbonate Viewing Window 9-19

Figure 9-24 Utility Pull Section - Top View 9-19

Section 10 Electric Switchboards: 0 Volts Through 600 Volts

Figure 10-1 Standard Switchboard, CT Compartment, 0 Amps−1,200 Amps, Single-Phase or Three-Phase, 3-Wire Service 10-6

Figure 10-2 Standard Switchboard, CT Compartment, 0 Amps−1,200 Amps, Three-Phase, 3-Wire and 4-Wire Services 10-7

Figure 10-3 Standard Switchboard, CT Compartment, 1,001 Amps−3,000 Amps, Single-Phase or Three-Phase, 3-Wire Service 10-9

Figure 10-4 Standard Switchboard, CT Compartment, 1,001 Amps−3,000 Amps, Three-Phase, 4-Wire Service 10-11

Contents Page

Section 10 Electric Switchboards: 0 Volts Through 600 Volts, continued

Figure 10-5 Standard Switchboard, CT Compartment, 3,001 Amps and Larger, Three-Phase, 3-Wire Service 10-13

Figure 10-6 Standard Switchboard, CT Compartment, 3,001 Amps and Larger, Three-Phase, 3-Wire or 4-Wire Service . . . 10-15

Figure 10-7 Switchboards, 0 Volts−600 Volts, CT Compartment, 1,001 Amps−3,000 Amps, Removable Link and CT Support (One-Bolt Configuration) 10-17

Figure 10-8 Switchboards, 0 Volts−600 Volts, CT Compartment, 1,001 Amps−3,000 Amps, Removable Link and CT Support (Four-Bolt Configuration) 10-18

Figure 10-9 Switchboards, 0 Volts−600 Volts, CT Compartment, 3,001 Amps and Larger, Removable Link and CT Support (Two-Bolt Configuration) 10-19

Figure 10-10 Switchboards, 0 Volts−600 Volts, CT Compartment, 3,001 Amps and Larger, Removable Link and CT Support (Six-Bolt Configuration) 10-20

Figure 10-11 Standard Section for Self-Contained Meter Sockets, 0 Amps−225 Amps, Installed in Switchboards: Nonresidential 10-22

Figure 10-12 Pull Section 10-24

Figure 10-13 Separate Pull Box 10-24

Figure 10-14 Bottom-Fed Service Section 10-24

Figure 10-15 Switchboard Pull Section, High Entry 10-26

Figure 10-16 Switchboard Pull Section, Low Entry 10-26

Figure 10-17 Extended Top on Switchboard Pull Section Front View (Side Entry) or Side View (Back Entry) 10-27

Contents Page

Section 10 Electric Switchboards: 0 Volts Through 600 Volts, continued

Figure 10-18 Additional Side or Back Switchboard Pull Section, High Entry 10-28

Figure 10-19 Additional Side or Back Switchboard Pull Section, Low Entry 10-29

Figure 10-20 Landing Terminal Detail 10-32

Figure 10-21 Spacing Requirements 10-32

Figure 10-22 Buses Accessible From Only One Side (Bolts Must Be Secured in Place) 10-32

Figure 10-23 Buses Accessible From Either Side (Mounting Surfaces on Both Sides of Bus) 10-32

Figure 10-24 Standard Switchboard Service Section With CT Compartment and Filler Panel, 0 Volts−600 Volts 10-34

Figure 10-25 Low-Profile Switchboard Service Section With CT Compartment for Underground, Outdoor Application, 0 Volts−600 Volts 10-35

Figure 10-26 Standard Switchboard Service Section, 15-Inch Hinged Panel for Socket Meter and Test Switch 10-36

Figure 10-27 Standard Switchboard Service Section, 30-Inch Panel for Socket Meters and Test Switches 10-37

Figure 10-28 Outdoor or Rain-Tight Enclosures for Switchboards 10-38

Figure 10-29 Outdoor or Rain-Tight Enclosures for Switchboards 10-38

Figure 10-30 Outdoor or Rain-Tight Enclosures for Switchboards 10-38

Figure 10-31 Outdoor or Rain-Tight Enclosures for Switchboards 10-38

Figure 10-32 Existing Switchboard 10-40

Contents Page

Section 11 Electric Switchboards: 601 Volts Through 25,000 Volts and Primary Services

Figure 11-1 Primary Switchboard Termination Section Pad Detail 11-4

Figure 11-2 Hinged Meter Panel with Multiple Sockets for 2,400 to 27,000 Volt Service 11-5

Figure 11-3 Hinged Meter Panel with Dual Socket for 2,400 to 27,000 Volt Service 11-6

Figure 11-4 Typical, High-Voltage Metering Enclosure: 2,400-Volt Through 17,000-Volt Service 11-8

Figure 11-5 Typical, High-Voltage Metering Enclosure, 17,001-Volt Through 25,000-Volt Service 11-9

Figure 11-6 Typical, High-Voltage Metering Enclosure, 17,001-Volt Through 25,000-Volt Service 11-10

This Page Intentionally Left Blank

SECTION 1
GENERAL

SECTION 1 GENERAL

Section 1
General

Safety Alert

Contacting overhead or underground electric lines or equipment and natural gas pipelines can cause serious injury or death. Any part of a crane, scaffold, construction material, antenna, cable, rope, guy wire, or tool that touches an overhead electric line or penetrates an underground cable can become energized. Penetrating an underground natural gas line with a backhoe or other tool can cause a violent explosion.

WARNING

To avoid potential accidents, do **not** begin to excavate before identifying underground facilities.

State law requires applicants to contact Underground Service Alert (USA) **by dialing 811 at least 2 working days before excavation** (weekends and holidays excluded). Ensure that you call USA when planning underground work, before digging begins, to allow adequate time for USA to determine the location of underground gas and electric lines or equipment. ***The potential for an accident exists* if applicants fail to request USA to identify underground utility facilities before excavation begins.**

USA

First, the applicant must mark the excavation area with white paint. Then, USA arranges for participating companies to mark the locations of their underground facilities at the jobsite. **This is a free service.** See the USA color-code identifiers below and on the back of this manual.

Additional information is available at www.pge.com/digsafely. Also, see USA services at the USA North website at http://www.usanorth.org. USA is a locating service for excavation only. Do not use USA for design purposes.

Dig Safely

Table 1-1 USA Color Coding[1]

Excavation Sites & Underground Facilities	Marking Color
Proposed Excavation	White
Temporary Survey Markings	Pink
Electric	Red
Gas–Oil–Steam Chemical	Yellow
Communication CATV	Orange
Water	Blue
Reclaimed Water Irrigation Slurry	Purple
Sewer	Green

[1] Call 2 working days before you dig.

Arc-Flash Hazard Warning

All applicants or persons working on, working near, or observing others working on any PG&E facility **will be exposed** to potential arc-flash hazards and are required to wear flame-resistant (FR) clothing. The requirement to wear FR clothing applies to everyone. Applicants and their personnel must wear FR clothing before being allowed access to perform work in and around PG&E facilities. Also, applicants and their personnel must ensure that they wear the appropriate level of FR clothing for the job being performed. Please see Appendix A, "Acronyms and Glossary," for a definition of facilities. Also refer to the FR requirement letter in Appendix B, "Electric and Gas Service Documents."

1.1. Purpose

NOTE: For the purpose of this manual, the word "applicant" is used generically to refer to the Pacific Gas and Electric Company (PG&E) customer, or to the person or persons representing the PG&E customer in the application/construction process, including a contractor, design consultant, or installer. The word "customer" is used only when the word "applicant" is not applicable. Also, PG&E is sometimes referred to as the "Company" throughout this manual.

This manual is designed to help applicants establish gas and electric service. By reading the mandates published in this manual, applicants will understand not only the steps required to apply for service, but also the legal and safety requirements driving those steps. PG&E provides this manual to all gas and electric applicants, both in hard copy and online, in an effort to ensure that the Company can continue to deliver safe, uniform service.

The 2016 *Greenbook* supersedes all previous editions and revisions. This manual is a collection of requirements and policies for establishing electric and gas service to new or remodeled installations. The *Greenbook* is updated yearly; however, PG&E's building requirements, as well as gas and electric design standards, are subject to change throughout the year. It is important that all applicants consult the online version of the *Greenbook* before finalizing project plans.

In addition to the requirements provided in this manual, applicants for gas or electric service also must comply with federal regulations and with all applicable tariffs, as well as the rules and general orders set forth by the California Public Utilities Commission (CPUC). These regulations and orders include, but are not limited to, the following documents:

- *General Order (G.O.) 95*, "Rules for Overhead Electric Line Construction"
- *G.O. 112-F*, "Rules Governing Design, Construction, Testing, Operation, and Maintenance of Gas Gathering, Transmission, and Distribution Piping Systems"
- *G.O. 128*, "Rules for Construction of Underground Electric Supply and Communication Systems"
- 49 *Code of Federal Regulations* (*CFR*), Part 192, "Transportation of Natural and Other Gas by Pipeline: Minimum Federal Safety Standards"

Finally, applicants must comply with all other federal, state, and local regulations. These regulations may include a Federal Aviation Administration (FAA) review for structures that impinge on navigable airspace. In such cases, the FAA requires filing notice of proposed construction a **minimum of 45 days before starting the proposed construction.** The FAA may issue a determination of hazard to air navigation and recommend actions to mitigate or eliminate that hazard. For additional information, please contact your PG&E project coordinator.

1.2. Permits and Inspections

Builders who are constructing new buildings or remodeling existing buildings must conform to the following guidance documents.

A. The current provisions of city and county ordinances.

B. Rules on file with, or issued by, the CPUC.

C. Applicable rules and laws of the state of California, including the following three codes.

- Plumbing codes
- Mechanical codes
- Electric codes

Local and state ordinances require applicants to obtain the appropriate permits and final inspections before PG&E establishes services to any building or structure.

In areas where local ordinances governing gas or electrical installations do not exist, or where inspections provided by local jurisdictions for such installations are not available, the applicant must obtain written confirmation from a qualified person that the facilities meet the requirements specified in this manual.

PG&E will **not** establish gas or electric service until the gas piping or electric service facilities are installed satisfactorily.

NOTE: Gas meter release forms obtained from a permitting agency must include the specific, requested pressure (e.g., 7” w.c., 2 psig, 5 psig).

PG&E’s inspection process includes service requirements that are **not** governed by local or state codes. Parts of the applicant’s installation may require approval by state, local, **and PG&E inspectors**.

1.3. Applying for Building and Renovation Services

Customer Connect

An “Application for Service” is required for all new gas or electric services, as well as for relocating or rearranging existing services. Whether you are building or renovating your home, expanding your business facility, or opening a facility at a new location, you can apply on the Internet at “Customer Connections Online” (www.pge.com/customerconnections) and track your project with our new online tools.

Also, at the PG&E Internet websites below, you will find guides for getting started, process overviews, project cost ranges, online applications, and more. This information is provided to help you plan your project and get started. For more information, visit the following web pages.

Customer Connect

Residential Services: http://www.pge.com/building

Business and Agricultural Services: http://www.pge.com/newconstruction

Applicants without Internet access may contact the Building and Renovation Service Center 1-877-743-7782. PG&E representatives will provide you with details about the process and assist you with applying for service.

Residential

The process for installing or changing gas and electric services takes time and planning. PG&E recommends you contact us early in the process with accurate load information and the date that the services are required to allow for adequate time to complete your service request.

Large-capacity gas meters, electric transformers, or other special equipment often require **several months lead time** to ensure a timely delivery from the manufacturer.

Applicants must contact their local PG&E project coordinators when approved construction plans change, or when situations that affect PG&E's service arrangements occur during construction, so that mutually satisfactory, alternate arrangements can be made.

Commercial

To assist PG&E in its goal to deliver safe, uniform service, applicants should **use the following guidelines when transmitting electronic drawing files for architectural, mechanical, and civil site plans**.

1. PG&E's electronic drawing tool is AutoCAD 2012, .DWG format. Ensure that submitted electronic drawings are either readable using, or compatible with, AutoCAD, 2012 (or older).

   NOTE: PG&E accepts the version of AutoCAD with the "Pack & Go" feature.

2. Applicants can uploaded documents at PG&E's "Customer Connections Online" (www.pge.com/customerconnections) Internet website. Send drawings on a USB drive, CD, or as an email-attached file.
3. Applicants who do not use the online option described in Number 2. above should send drawings for large projects in a zipped format.
4. Use layering, if possible, and preserve the layering when transferring files to PG&E.
5. Save all drawings in model space instead of paper space.
6. Make drawing plans two dimensional, with the "Z" elevation at zero.
7. Ensure that any External Reference Files (Xref) or drawing updates maintain a consistent insertion point.
8. Include all related drawing files (e.g., elevations, landscape plans, other proposed underground facilities).

Please contact your local PG&E project coordinator if you have any questions.

PG&E is committed to complying with all federal, state, and local environmental laws, regulations, and rules. Applicants must provide PG&E with copies of permits showing that they have met all environmental compliance requirements when submitting applications for service. See the "Applicant Responsibilities for Environmental Reviews for Service Requests" letter for more information. **Applicants can obtain copies of this letter from their local PG&E project coordinators.**

Project permits or approvals may contain conditions that require or restrict certain service designs or construction activities by PG&E, applicants, agents, consultants, or contractors. The applicant must bring these conditions to PG&E's attention to ensure that the requirements or restrictions are included in the project design during the planning and construction phases. When submitting the service application, the applicant **must** provide PG&E with a written copy of any special conditions, identifying the requirements or restrictions that affect the project design and/or PG&E installation activities.

1.4. Changes in Requirements

PG&E may revise its design and construction documents relating to applicant service requirements between updates to this manual. Except when required by law, the version of the design and construction document in effect on the date the applicant's service design is approved and signed-off by the PG&E supervisor determines the requirements that the design must meet. These requirements apply as long as applicants complete approved projects within 12 months. If the applicant has not initiated construction within 12 months of PG&E's initial approval, PG&E may initiate the review of the design and, if warranted, refresh the cost estimate. If the applicant does not fulfill obligations under the extension agreement, PG&E may, at it discretion, cancel the agreement (see Provisions Form 62-0982, Section 20). PG&E can then request another review of the design before approving construction activities.

For applicant design jobs, refer to the *Applicant Design Guide*. On applicant design jobs, the version of the design and construction document that is in effect on the date PG&E approves and signs-off on the final Globals package determines the requirements that the design must meet. The Globals package is valid for 90 days.

Applicants are encouraged to contact PG&E **early in the planning stages** of their projects. By consulting with their local project coordinators, applicants are made aware of the current construction requirements **before** they initiate any design work.

Do not perform construction using an unauthorized or preliminary drawing. The applicant assumes full responsibility for errors, omissions, or changes if the project is constructed using either preliminary drawings or drawings that are not approved by PG&E.

PG&E will not accept or assume ownership of facilities installed by the applicant before the construction design is completed and approved by PG&E. Additional facilities, even if provided at no cost to PG&E, represent increased plant in the rate base. This includes associated, long-term increases in taxes and maintenance expenses. Applicants are responsible for any additional design changes or reconstruction costs that may be required if PG&E does not accept unapproved facilities. PG&E will not pressurize a system that has not received final design approval and passed all inspections.

Engineering and construction documents or requirements are incorporated into new editions of this manual; however, revisions are made periodically. Applicants can obtain revised engineering documents or requirements in two ways:

- These documents are available on PG&E's Internet site (www.pge.com/greenbook).
- These documents are available through your local PG&E project coordinators.

Some of the information contained in this manual is based on government codes and ordinances that are subject to change as determined by the governmental authorities. PG&E does **not** assume responsibility for keeping information in this manual current with these government codes, ordinances, or other requirements. Applicants should consult the responsible governmental agency with questions about the applicability of any construction procedures or requirements.

1.5. Additional Commercial and Industrial Service Information

For electric installations of more than 600 volts (V), refer to *Greenbook* Section 11, "Electric Switchboards: 601 Volts Through 25,000 Volts and Primary Services." Generally, this manual does **not** include information about large commercial or industrial gas loads; however, PG&E provides applicants with individual job-design specifications after they request service.

1.6. Design and Construction

1.6.1. PG&E's Responsibilities

PG&E is responsible for planning, designing, and engineering its service facilities and service laterals using PG&E's standards for design, materials, and construction.

1.6.2. Applicant's Responsibilities

Residential, commercial, and industrial applicants for gas and/or electric extensions and services may select a contractor to design their facilities.

PG&E requires a clear path from existing distribution facilities to the location on the applicant's jobsite where the services will be connected. Depending on the project, the applicant may need permits or approvals for these supply lines in order to comply with federal, state, and local requirements, regulations, and rules (including environmental laws).

Local PG&E project coordinators can provide applicants with information about available options for clearing supply lines, as well as any associated design and contract requirements for their projects.

Before designing their projects, applicants and/or their contractors must complete PG&E's "Application for Service" form, provide applicable construction plans, and submit any required project deposits to PG&E.

1.6.3. Providing Access to PG&E Electric Facilities

Applicants are required to provide access roads on their properties to PG&E pad-mounted or subsurface (i.e., transformer or switch) facilities. The roads must be accessible to PG&E at all times and constructed with either a Class 2 or an AB road base that is a minimum of 10 feet wide, with 18 feet of vertical clearance above. Also, there must be a 30-foot radial, hammerhead-style, turn-around area at the end of the roads.

Do not place facilities more than 15 feet away from an accessible road.

1.6.4. Installing Transformers

PG&E will specify the type of transformer installations to be constructed on applicants' premises.

Applicants may contact their local PG&E project coordinators to obtain specific transformer requirements for their projects.

NOTE: **For reasons of safety and reliability**, PG&E does **not** allow applicants to install water sprinklers to cool off transformers.

PG&E's standard transformer installations for residential, commercial, and industrial services are described below:

1. A pole-bolted transformer in overhead areas when the applicant's load does **not** require a 75 kilovolt ampere (kVA) or larger transformer.
2. A pad-mounted transformer in underground areas or in an area with overhead facilities when PG&E determines that the applicant's load will require a 75 kVA or larger transformer.

1.7. Connecting and Sealing Services

A. PG&E provides standard service to applicants as described below.

1. Establish service at one service delivery point, through one meter, and at one voltage class or pressure.
2. Design service to extend from the connection to the distribution facilities along the shortest, most practical, and most available route to the service termination facility or service delivery point, as determined by PG&E.

B. The requirements for standard service are described below.

1. Only authorized PG&E employees can connect or disconnect PG&E's gas or electric service to the building or structure.
2. Unauthorized persons must not tamper with or break PG&E seals placed on meters and associated service equipment.
3. Only authorized PG&E employees can remove, replace, or interfere with PG&E's meters, seals, connections, padlocks, or other locking devices.
4. Applicants must call PG&E if it is necessary to have either the service disconnected or the meter removed because of remodeling, alterations, or other activities.

5. Applicants must **not** connect house gas pipes or other applicant facilities to the plugged side of the gas service-tee fitting. That fitting is for PG&E's use only.
6. Applicants must place service termination enclosures in PG&E-approved locations within buildings, such as meter and service rooms or similar areas.
7. Applicants must **not** locate service termination enclosures in the interior, inhabitable area of residences.
8. Applicants must ensure that all service and metering facilities are readily accessible.
9. PG&E must review and approve of all service and meter locations and arrangements **before installing** any metering facilities, service-termination enclosures, or other utility service facilities.
10. The applicant assumes the risk for any work performed without requesting PG&E's advanced approval. PG&E can charge the applicant if it is necessary to make changes to unapproved work.
11. An unauthorized connection to PG&E's gas or electric facilities, or to facilities used to provide utility services, may be a violation of the *California Penal Code*, Section 498 and Section 593c, and subject the person to damages pursuant to *California Civil Code*, Section 1882, et. Sequitur. These sections address connecting to utility meters and facilities and diverting utility services. They specifically prohibit any person from tampering with, making, or causing to be made any connection or reconnection with property owned or used by the utility to provide utility service, without the utility's authorization or consent.
12. PG&E may require a service location to be closer to the distribution facilities in the following instances:
    - In areas where the nearest building is a considerable distance (i.e., 200 feet or more) from the property line.
    - If, in PG&E's judgment, there is a potential hazard between the property line and service location.

1.8. Access to an Applicant's Residence, Building, or Property

PG&E has the right to access Company facilities located on an applicant's premises at any time, for any purpose connected with furnishing gas and/or electric service. These purposes include the following activities:

- Reading meters.
- Inspecting utility facilities.
- Making routine repairs.
- Performing maintenance and emergency work.
- Exercising any and all rights secured to PG&E either by law or under PG&E's tariff schedules, including *Electric Rule 16*, "Service Extensions," and *Gas Rule 16*, "Gas Service Extensions."

1.9. Overhead Electric Lines

The California Division of Occupational Safety and Health (Cal/OSHA) regulations, Title 8, Division 1, "Department of Industrial Relations," Chapter 4, "Division of Industrial Safety," Subchapter 4, "Construction Safety Orders," Article 15, "Cranes and Derricks in Construction," Section 1612, "Power Line Safety," and the associated sub-articles, require that minimum safe working and traveling distances be maintained from cranes and derricks to overhead electric lines.

In support of these regulations, PG&E provides the voltage for overhead lines within two business days of receiving a customer inquiry. Call the PG&E Building and Renovation Service Center (BRSC) at 877-743-7782 or Customer Service at 1-800-743-5000.

Cal/OSHA regulations, Title 8, Chapter 4, Subchapter 5, "Electrical Safety Orders," Group 2, "High-Voltage Electrical Safety Orders," Article 37, "Provisions for Preventing Accidents Due to Proximity to Overhead Lines (Formerly Article 86)," Section 2946, "Provisions for Preventing Accidents Due to Proximity to Overhead Lines," requires that minimum safe working distances be maintained from overhead electric lines. Specific requirements taken from the regulation are shown in Table 1-2, "Minimum Safe Working Distances (Scaffolds, Equipment, Tools, Structures, and People)," and Table 1-3, "Minimum Safe Working Distances (Boom-Type Lifting or Hoisting Equipment)," both below.

Table 1-2 Minimum Safe Working Distances (Scaffolds, Equipment, Tools, Structures, and People)

Nominal Voltage (Phase-to-Phase)	Minimum Required Clearance (Feet)
600 — 50,000	6
over 50,000 — 345,000	10
over 345,000 — 750,000	16
over 750,000 — 1,000,000	20

Table 1-3 Minimum Safe Working Distances (Boom-Type Lifting or Hoisting Equipment)

Nominal Voltage (Phase-to-Phase)	Minimum Required Clearance (Feet)
600 — 50,000	10
over 50,000 — 75,000	11
over 75,000 — 125,000	13
over 125,000 — 175,000	15
over 175,000 — 250,000	17
over 250,000 — 370,000	21
over 370,000 — 550,000	27
over 550,000 — 1,000,000	42

Contact a local PG&E project coordinator with any questions about working near overhead electric lines or about nominal voltage.

1.10. Underground Electric Lines and Gas Pipelines

Safety

As mentioned on Page 1-1, state law requires applicants to contact USA by dialing 811 at least 2 working days before excavation (weekends and holidays excluded). Applicants **must** call USA when *planning* underground work **(before digging begins)** to allow adequate time for USA to determine the locations of underground gas and electric lines and/or equipment.

USA arranges for participating companies to mark the locations of their underground facilities at the jobsite. There is no charge for this service. The applicant must mark each end of the excavation area with white paint as well as the total length in feet. Applicants should also use arrows to indicate the direction of the trench. For more information, go to www.pge.com/digsafely. Also, learn more about USA services at the USA North website (http://www.usanorth.org).

1.11. PG&E Safety Training Resources

PG&E wants to ensure that contractors and construction workers avoid electric and natural gas hazards by practicing basic safety rules. Please visit www.pge.com/contractorsafety, "Contractor Safety Program Requirements," for materials to assist you in providing your employees with safety training.

1.12. SmartMeter™ Program

SmartMeter™

PG&E's SmartMeter™ Program is part of a statewide effort driven by the CPUC to upgrade California's energy infrastructure with automated metering technology. The SmartMeter™ Advanced Meter Reading system includes a programmable, solid-state electric meter and a gas module, installed on a traditional gas meter at each service delivery point to measure and record energy use.

For more information on SmartMeters™, including instructions on tracking your energy use online or information on the opt-out program, please visit www.pge.com/smartmeter.

1.13. PG&E Online (Website)

USA

Dig Safely

The PG&E website at www.pge.com has many tools for building or renovating your home, expanding or renovating your business facility, or opening a new location.

Building and Renovation Services tools are available for residential services at www.pge.com/building/, and for business services at www.pge.com/newconstruction. These websites include:

- "Getting Started" guides.
- Glossary of terms.
- Building and renovation services process flow.
- A tool to locate city/county building and planning departments.
- A project cost range tool.
- Answers to frequently asked questions (FAQs).
- A link to energy-efficiency rebate information.

These tools can help you plan your project and get started. For more information, visit the following web pages.

- Apply online and track your project: www.pge.com/customerconnections
- Residential services: www.pge.com/building/
- Business and agricultural services: www.pge.com/newconstruction

Commercial

Residential

Customer Connect

1.13.1. *Electric and Gas Service Requirements* Manual (aka *Greenbook*)

The *Greenbook* is available on the Internet at www.pge.com/greenbook. Perform the following steps to access the *Greenbook* from the PG&E homepage (http://www.pge.com/).

1. Select either the "For My Home" or the "For My Business" link on the PG&E homepage.
2. Find the "Customer Service" drop-down at the top of the page and click on "More Services."
3. Click on the "Building and Renovation Services" link in the middle of the page.
4. On the right side, under "Additional Resources," find the *Electric and Gas Service Requirements* link.

NOTE: Communicate and coordinate all gas and electric service arrangements through your assigned PG&E project coordinator. As mentioned earlier in this section, PG&E documents may be updated independently of this manual; however, the project coordinators provide applicants with the latest updated or revised information on request. Applicants **must** contact their assigned project coordinators to ensure that they are correctly interpreting and using the information found in this manual and in other governing documents.

1.13.2. Rates and Tariffs

Rate and tariff information is available on the "Rates and Tariffs Library" at http://www.pge.com/about/rates/. This information also is available under the "Additional Resources" heading on the "Building and Renovation Services" homepage. The online "Tariffs" provide current gas and electric rate schedules, preliminary statements, rules, forms, advice letters, and more.

Rates & Tariffs

1.14. Determining the Service Rating

A. For installations supplying a single main-disconnecting means (i.e., single main disconnect), the rating of the PG&E service to be supplied is the rating of the electrical enclosure, service-termination section, pull can, service section, main service-switch continuous current rating, or other service-termination enclosure where PG&E terminates and connects its supply facilities and conductors **(whichever is greater)**.

For switchboards, this is typically listed as the supply rating. For panelboards, the rating is the maximum ampacity or the greatest rating for any individual component (main bus, meter socket, main disconnect, etc.) in the panelboard. See exceptions for select agricultural customers in Subsection 1.14.D. below.

B. For installations supplying a premises without a single disconnecting means (e.g., a service with multiple disconnects), the rating of the PG&E service to be supplied is the rating of the electrical enclosure, service-termination section, pull can, service section, or other service-termination enclosure where PG&E terminates and connects its supply facilities and conductors **(whichever is greater)**. For switchboards, this is typically listed as the supply rating. For panelboards, the rating is the maximum ampacity or the greatest rating for any individual component (main bus, meter socket, etc.) in the panelboard. See exceptions for select agricultural customers in Subsection 1.14.D. below.

C. If the termination section, enclosure, or facility is **not** rated, the rating of the service is the maximum rating of the single, main-disconnecting means or the aggregated maximum ratings of all the service disconnects. See exceptions for select agricultural customers in Subsection 1.14.D. below.

D. For agricultural services with a pump motor as the largest load, the ampacity rating of either single or multiple main-service disconnects is no longer used to determine the PG&E service rating for metering equipment that requires transformer-rated meter(s) and current transformers (CTs). The rating of the service supplied will be the ampacity rating of the metering equipment or enclosure (typically whichever is greater) where the service conductors terminate. This exception applies only to the following equipment.

- Wall-mounted (includes panelboard construction) metering equipment or termination enclosure, without a breaker or fused disconnects, located inside of the enclosure. The breaker or disconnects must be located in a separate enclosure.
- Pad-mounted (i.e., floor-standing) equipment, with or without a breaker or fused disconnects, located inside of the enclosure.

This exception is not applicable when self-contained metering equipment is installed.

1.15. Changing an Applicant's Approved Project or Existing Service Loads

An applicant **must provide written notice to PG&E** of any changes or plans to make material changes either in the amount or in the character of the gas and/or electrical load, equipment, or other facilities installed to supply gas and/or electricity to the applicant's premises, structure, building, or other facilities. For more information, applicants can review *Electric Rule 2* and *Gas Rule 2*, both called "Description of Service," as well as *Electric Rule 3* and *Gas Rule 3*, both called "Application for Service." PG&E requires this written information to determine the following factors.

1. The adequacy of the existing utility service and supply facilities.
2. The need to modify those facilities to meet and supply the changed load or equipment requirements. This includes changes in the character or nature of the applicant's previously approved gas and/or electric service.

Applicants must notify PG&E of any planned or intended changes in the load, character, or nature of the service required to supply the premises, structure, building, or other facilities.

If an applicant fails to notify PG&E, and the changes exceed the capabilities of the installed utility service, metering, or other equipment and damage those facilities, the applicant is liable for all damages and resultant costs to PG&E.

Applicants must provide PG&E with written notice **immediately** when they make any material change either in the amount or character of the gas and electric lamps, appliances, or apparatus installed on the premises to be supplied with electric energy.

1.15.1. Upgrading, Replacing, Relocating Electric Facilities, or Adding Power Generation Sources

When PG&E determines that its existing service facilities require replacement, those facilities are replaced as a new service extension under the provisions of the tariff rules.

Upgrade: An increase in the ampacity rating (e.g., 100 amps to 125 amps) of the equipment where PG&E terminates its service is typically defined as an upgrade. The ampacity rating also may be known as the service-entrance capacity. For example, when an applicant replaces an existing electric meter panel, switchboard, or termination enclosure with one that has a greater ampacity rating (i.e., upgrade), all *Greenbook* requirements must be met. Typically, this also includes installing new conduit and service conductors. See the sections titled "Upgraded Panel" in the numbered documents below for conditions when the conduit or cable may not require upgrading, as determined by PG&E.

- Numbered Document 063927, "Methods and Requirements for Installing Residential Underground Electric Services 0–600 Volts to Customer-Owned Facilities"
- Numbered Document 063928, "Methods and Requirements for Installing Commercial Underground Electric Services 0–600 Volts to Customer-Owned Facilities"

Like-for-Like: Replacing service equipment with equipment of the exact same ampacity (e.g., 100 amps to 100 amps) is considered a "like-for-like" replacement and typically is **not** considered an upgrade.

The service equipment must be positioned so the existing PG&E service conductors can be reconnected properly. If PG&E needs to install additional service conductors or cables to perform the reconnect, the work and material is the applicant's responsibility. (See the paragraph on "Relocating" below.) A like-for-like does not have to meet the current *Greenbook* requirements if the safety or accessibility of the panel location is not compromised. For example, structures (e.g., decks, remodeled buildings) built over or around existing panels may not be energized if they do not meet PG&E requirements for safe working conditions.

Relocating: When existing electric facilities are relocated, applicant's must meet all of the current *Greenbook* requirements. If PG&E's existing service conductor can be used, as determined by PG&E, the panel must be positioned so the service conductor can be reconnected properly. The existing service conductor must be able to be reconnected either to the underground electric panel termination lugs or, for overhead services, to the external service-entrance conductors coming out of the weatherhead. If PG&E needs to install additional service conductors or cables to perform the reconnect, the work and material is the applicant's responsibility. PG&E **does not accept** cable-termination techniques using pin adaptors, cable ringing, or splicing on additional cable.

For additional information, see Subsection 5.3., "Electric Meters: General Location Requirements," on Page 5-4.

Adding Power Generation: All customer-generating equipment connected either to the Company's equipment or to customer equipment must conform to Company standards. This includes any applicable municipal, local, city, or federal rules and regulations, unless otherwise specified. Any distributed generation (DG) facilities must meet the clearance requirements detailed in the *Greenbook*. This includes all clearance requirements from gas facilities. Examples of DG facilities include, but are not limited to, renewable sources such as solar, wind, water power, and farm waste, as well as nonrenewable energy sources such as natural gas or other fossil fuels for conventional engines, turbines, and fuel cells.

1.16. Standard Residential Service Voltage

This subsection clarifies PG&E's voltage requirements when applicants design residential services.

1.16.1. Single-Phase Service

Unless the applicant qualifies for a three-phase service, the service voltage for single-family residential homes, duplex homes, town homes, condominiums, or apartment buildings is **120/240 V, single phase**.

PG&E will **not** supply 120/208 V, single-phase service to residential structures or buildings unless **both** of the following conditions are met.

1. A 120/208 V secondary system is established near the location where the requested service would be supplied.
2. The rating of the disconnecting means (i.e., the main switch or main disconnect) or of the service entrance does **not** exceed 225 amperes.

1.16.2. Three-Phase Service

If PG&E determines that a **single** residential building or structure justifies a 75 kVA transformer at 120/208 V, or a 5 horsepower or larger motor at 120/240 V for an overhead service, then installing three-phase service is an **option** for the applicant. This option also is available for underground services with a 75 kVA transformer at 120/208 V, or a 10 horsepower or larger motor at 120/240 V.

This applies whether the applicant plans to wire the individual residential units in a single-phase or a three-phase configuration. Applicants requesting the three-phase option must provide space on the property for PG&E to install a dedicated transformer. For more information, see *Electric Rule 2*.

If, based solely on PG&E's estimation, the electric service demand is greater than that which can be supplied by a single-phase, 100 kVA transformer, then PG&E **must** supply three-phase service.

Other load limitations and requirements used to determine qualification for three-phase service are contained in PG&E's *Electric Rule 2*.

Three-phase service is available in 208Y/120, 240/120, or 480Y/277 voltages. The appropriate voltage depends on the minimum load requirements and the maximum demand load permitted by PG&E's *Electric Rule 2*.

1.16.3. Mixed-Use Projects

Mixed-use projects include both commercial and residential loads. When designing a mixed-use project where the use occurs in separate buildings, ensure that each facility is supplied by a separate transformer. This means that a three-phase transformer could supply the commercial unit(s) and a single-phase transformer could supply the residential units(s).

If the mixed-use occurs in the same building, a single transformer typically is installed to supply the building. **The size and selection of the transformer is based solely on PG&E's estimated demand load.** The applicant must provide space on the property for PG&E to install a dedicated transformer.

In some cases, PG&E may determine that the commercial and residential loads must be supplied by separate transformers and service facilities, including meters and metering facilities. PG&E makes this determination based on the nature or anticipated operation of the nonresidential loads and how they may affect the services. The applicant must provide space for those service facilities on the property.

Again, when developing mixed-use projects, the applicant must communicate and work closely with PG&E early in the design phase.

This Page Intentionally Left Blank

SECTION 2
GAS SERVICE

SECTION 2 GAS SERVICE

Section 2
Gas Service

USA

2.1. Scope

This section of the manual covers general gas service and gas meter-set requirements for residential and nonresidential installations.

WARNING

To avoid potential accidents, do NOT begin to excavate before identifying underground facilities.

State law requires applicants to contact Underground Service Alert (USA) **by dialing 811 at least 2 working days before excavation** (weekends and holidays excluded). Ensure that you call USA when planning underground work, before digging begins, to allow adequate time for USA to determine the location of underground gas and electric lines or equipment. ***The potential for an accident exists* if applicants fail to request USA to identify underground utility facilities before they begin excavating.**

First, the applicant must mark the excavation area with white paint. Then, USA arranges for participating companies to mark the locations of their underground facilities at the jobsite. **This is a free service**. See the USA color-code identifiers in Table 1-1, "USA Color Coding," on Page 1-1, and on the back of this manual.

Additional information is available at http://www.pge.com/digsafely. Find USA services at the USA North website (http://www.usanorth.org). USA is a locating service for excavation only. Do not use USA for design purposes.

Dig Safely

2.2. Procedures for Establishing Gas Service

2.2.1. Establishing *New* Gas Service

Applicants must follow the steps described below to establish new gas service.

A. Applicant's Planning Stage

When planning to establish new gas service, applicants must:

1. Fill out and submit the appropriate PG&E application. Refer to Subsection 1.3., "Applying for Building and Renovation Services," on Page 1-3, for more information about the application requirements.
2. Contact their local PG&E project coordinators as early in the planning stage as possible.

   NOTE: See Table FM-1, "Service Planning Office Contact Information," at the front of this manual starting on Page iv, for specific contact numbers listed by area.

B. Working With PG&E

After initially contacting PG&E about installing new gas service, applicants must:

1. Provide detailed site improvement plans indicating roads, sidewalks, and driveways, as well as the locations of other site infrastructure elements. For individual parcels/single buildings, include the proposed locations of gas and electric meters, building elevations, and proposed future improvements. (Meter locations are subject to PG&E approval.)
2. Submit details about the type(s) of gas appliances being installed. Include the connected load breakdown in thousand British Thermal Units (MBTU) per hour for each appliance and its intended use.
3. Applicants requesting more than the standard delivery pressure of 7 inches of water column (WC) must submit a written justification for PG&E's review and approval. Standard delivery pressure is approximately 1/4 pounds per square inch gauge (psig). See Subsection 2.4.1., "Gas Pressure," on Page 2-18 for more requirements.
4. Applicants can choose either PG&E or an outside company to design and/or install their services. Also, applicants can choose who will perform the trenching for gas services. PG&E provides the applicant with a bid for service design and installation costs. Specific conditions must be met whether the applicant chooses PG&E or an outside company to work on the project. PG&E Standard S5453, "Joint Trench," located in Appendix B, "Electric and Gas Service Documents." PG&E Standard S5453, Exhibit A, "Joint Trench Drawing," and Exhibit E, "Authorization for Joint Trench Construction, Form B," both are required when PG&E facilities are in a trench with other utilities. Contact your local project coordinator for copies of these documents. (See Table FM-1, "Service Planning Office Contact Information," starting on Page iv.)

   Do not perform construction using an unauthorized or preliminary drawing. The applicant assumes full responsibility for errors, omissions, or changes if the project is constructed using either preliminary drawings or drawings that are not approved by PG&E.

   PG&E will neither accept nor assume ownership of additional facilities installed where the applicant begins construction before the design is completed and approved by PG&E. Additional facilities, even if provided at no cost to PG&E, represent increased plant in the rate base. This includes associated, long-term increases in taxes and maintenance expenses. Applicants are responsible for any additional design changes or reconstruction costs that may be required if PG&E does not accept unapproved facilities. PG&E will not pressurize a system that has not received final design approval and passed all inspections.

Information about service design and installation options is available either on Form 79-716, "General Terms and Conditions for Gas and Electric Extension and Service Construction by Applicant," or by calling PG&E's Building and Renovation Service Center (BRSC) at 877-743-7782.

5. Obtain approval from PG&E's project coordinators for the gas service lateral and meter-set location. If the new gas service request is complex, PG&E may require that estimators and/or engineers become involved **before** approving the gas service lateral and meter-set location.
6. Select a trenching agent to perform the required trenching and paving services. The trenching agent also must obtain all of the permits required for installing the gas service pipe from the point of connection at the main to the approved meter location. Applicants can select either PG&E or an outside contractor to perform this work.

   If an applicant selects an outside trenching agent for the project, the applicant must obtain a copy of PG&E's approved trench route or construction sketch. PG&E must inspect and approve any trenching and paving work performed by outside agents.
7. Pay PG&E for all of the installation costs. This includes the costs for facilities and appurtenant fittings, valves, service pipe, service regulators, metering equipment, etc., in excess of the allowances. For more information, see PG&E's *Gas Rule 15*, "Gas Main Extensions," Section B, "Installation Responsibilities," and *Gas Rule 16*, "Gas Service Extensions," Section E, "Allowances and Payments by Applicant."
8. Install, own, and maintain physical protection such as bollards or barrier posts and/or enclosures, as may be required.

C. Complying with Local Building Laws and Regulations

Applicants must contact local city and county deputies and inspectors to ensure compliance with all local laws and regulations. Applicants must:

1. Allow only qualified professionals to install applicant-owned facilities. Also, applicants must ensure that equipment required by local building codes are inspected by local building inspectors.
2. Complete the required inspections on applicant-installed gas piping (e.g., houselines) and equipment (e.g., valves, appliances) **before** scheduling meter-set work with PG&E.

2.2.2. Relocating or Adding Load to an *Existing* Service

Gas App.

An applicant should contact PG&E as early as possible when he or she plans either to build an addition on an existing premises or to relocate an existing service to a different, acceptable location. Applicants are required to fill out and submit PG&E Form 62-0687, "Application for Relocation/Rearrangement." This form is located on pge.com at http://www.pge.com/tariffs/tm2/pdf/GAS_FORMS_62–0687.pdf. This form, along with additional information about building and renovation services, also is found at http://www.pge.com/building/. The form requires applicants to provide the following information.

- **Project Type:** Asks the reason for the relocation/rearrangement.
- **Project Information:** Asks specific information about the project location and applicant.
- **Contract Information:** Asks for the applicant's legal name, mailing address, etc.
- **Representative Information:** If the applicant has a legal representative to relay project information and updates to the PG&E representative, the legal representative's name goes here.
- **Construction Information:** Describes the applicant's choices for trenching and backfill work.
- **Load Information:** Asks for the number of existing meters at each service location. Provide details about the types of existing gas appliances, as well as those being installed. Include the connected load breakdown in thousand British Thermal Units (MBTU) per hour for each appliance. Also include a description of each appliance's intended use.
- **Self-Generation and Net Metering Options:** Describes the requirements to apply for PG&E's net metering program.
- **Attachments:** Lists the documents required for the application including site improvement plans, drawings, and maps.
- **Agreement to Pay and Signature:** Applicants must sign the agreement and pay any fees associated with the work.

NOTE: Adding load may cause the existing service to become inadequate and may require the service to be upgraded and or replaced at the applicant's expense. (See *Gas Rule 16*.)

Applicants can choose to provide trenching for gas services relocations. PG&E Form 62-0687 describes these options in greater detail.

2.3. Gas Service Lateral

All plastic gas distribution service pipes and stub completions must be a minimum diameter of 1 inch for all new business installations and customer-requested service relocations.

2.3.1. General

A gas service lateral is the section of plastic tubing or steel pipe that connects the service riser and gas meter to PG&E's gas distribution main. The gas distribution main usually is located in the street or in an easement located adjacent to the applicant being served. For an example, see Figure 2-1, "Typical Gas Service Installation," on Page 2-6.

The gas distribution main usually is located in the street or in an easement located adjacent to the applicant being served. Applicants should install the gas distribution mains in joint trenches, when it is feasible to do so. Locate distribution mains 10 feet from the face or foundation of any building as described in Gas Design Standard A-90, "Plastic Main and Service Installation," located in Appendix C. On private property, ensure that easements are at least 10 feet wide for mains. Services that cross third-party property also require a 10-foot wide easement.

A financial allowance for the installed service cost is based on the applicable, connected gas appliances installed within a specific time period. The allowance is applied toward the cost of a new service, as outlined in PG&E *Gas Rule 16*, Section E.

A. When installing a gas service lateral service, PG&E performs the following actions.

NOTE: While it is PG&E's responsibility to install and design the gas service lateral, the applicant has the **option** to perform both.

1. PG&E installs a service-lateral extension and applies the gas rule allowances, based on applicant load, to the applicant under the following conditions:
   a. PG&E determines that the loads to be served are bona fide.
   b. The loads are connected and the extension placed into service subject to compliance with *Gas Rule 15* and *Gas Rule 16*.
2. Design the PG&E-approved gas service to the shortest and most practical route, preferably in a straight line at a right angle from the gas main to an approved meter location. Avoid offsets, diagonal runs, bends, and services installed under driveways or customer-paved areas. **Exceptions require PG&E's advanced approval**. When the building or structure is on a corner lot, PG&E determines the gas main for connection.
3. Install and connect the gas service lateral to the gas main in the adjoining street, highway, alley, lane, road, or easement.

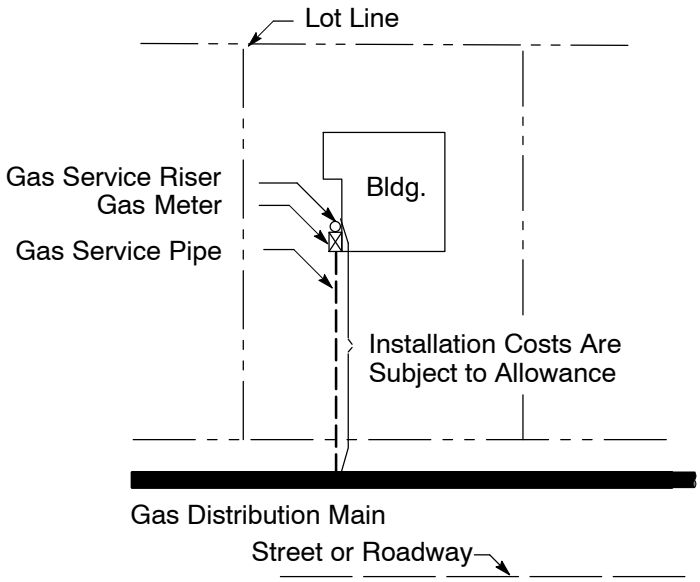

Figure 2-1
Typical Gas Service Installation

4. Install a utility excess flow valve (EFV), as required, when installing a new service lateral. See Subsection 2.3.1.D. on Page 2-8 for more information on installing EFVs. For specific requirements, refer to Gas Design Standard A-93.3, "Excess Flow Valves," located in Appendix C, "Electric and Gas Engineering Documents."
5. Own and maintain the gas service lateral (and EFV, if required) from its point of connection with the gas main to the service delivery point.
6. If possible, do not install gas service laterals under or through retaining structures (e.g., retaining walls) greater than 3 feet tall. PG&E will consider plans that include service laterals running under or through retaining structures and determine approval on a case-by-case basis.

   NOTE: A **retaining wall** is a structure that retains (i.e., holds back) material (usually earth) and prevents it from sliding or eroding away. Retaining walls are designed to resist the pressure of the material being held back.

B. PG&E does **not** permit the following types of installations.

1. Installing gas service laterals under or through structures, buildings, foundations, or decks. On an exception basis, PG&E may approve a gas service riser in a gas meter room that meets the requirements in Gas Design Standard J-16, "Gas Meter Room," located in Appendix C.
2. Installing gas service laterals and gas service risers directly into concrete or asphalt pavement materials.

3. Installing gas service risers that are not approved by PG&E.
4. Installing gas service risers without an approved sun shield.

NOTE: If PG&E determines that an applicant's uninspected trench excavation requires repair, or if the uninspected trench is backfilled and/or paved over, the applicant must provide and pay for all of the paving services and permits that are required to get an inspection and repair the trench excavation completely. This includes trenches dug on both public and private property.

C. When installing a gas service lateral, the applicant is responsible for ensuring the following conditions are met.

NOTE: Applicants must refer to PG&E Form 79-716 when they propose installing new gas services for new business utility services. This form is located on the Tariffs website on pge.com at http://www.pge.com/tariffs/tm2/pdf/GAS_FORMS_79-716.pdf.

1. Provide and maintain a clear route, free of any obstructions, for installing the gas service facilities.
2. Trench, backfill, and perform any other digging as described in PG&E's specification and inspection instructions, as required.
3. Pay any required permit fees. Refer to Figure 2-2, "Gas-Only Trench;" Figure 2-3, "Typical Gas Bell Hole – Plan View;" and Figure 2-4, "Typical Bell Hole Depth – Profile View," on Page 2-9, for gas-only trenches. See Figure 2-5 "Typical Joint Service Trench," on Page 2-11, for joint utility trenches.
4. Install and maintain all of the gas piping downstream of the service delivery point. See Subsection 2.5., "Applicant-Owned and Installed Gas-Service Piping (e.g., Houseline), Valves, and Automatic Shut-Off Devices," on Page 2-42, for more information.
5. Ensure that all requirements are met in the following PG&E Gas Design Standards, which are located in Appendix C.
   - A-75, "Gas Service and Mains in Plastic Casing"
   - A-81, "Plugs and Caps for Non-Pressurized Gas Pipelines"
   - A-90, "Polyethylene Gas Distribution System Design"
   - A-93.1, "Installing and Maintaining a Polyethylene Gas Distribution System"
   - A-93.3, "Polyethylene Excess Flow Valves"
6. Notify PG&E as soon as any paving activity is planned and provide PG&E with the scheduled completion date. Applicants should remember that PG&E can meet their schedules when the Company is notified early in the process.

7. PG&E must approve all requests for gas service in a casing before installation. Provide and install an approved casing (i.e., sleeve) under the paving material when the paving will extend over the gas service lateral. Applicants must ensure that:
   a. The casing is made of a PG&E-approved material. Refer to Gas Design Standard A-75, located in Appendix C.
   b. PG&E employees and equipment have sufficient, safe, and unobstructed access to the casing location with sufficient space to perform any required work when installing in a joint trench.
   c. Before paving, a minimum 3-inch casing (i.e., sleeve) is placed around the gas service riser.
8. PG&E Procedure TD-4632P-01, "Cross Bore Prevention and Mitigation," provides the steps that must be taken to prevent, inspect, identify, report, and address cross bores that are created when PG&E, its contractors, and contracting agencies perform trenchless construction. All gas construction work performed by or for PG&E is subject to this procedure, including PG&E gas-for-electric work, deep well anode installation, and applicant- installed work.

   NOTE: Find additional information about cross bores at the Sewer Cleaning Safety website (http://www.pge.com/en/safety/gaselectricsafety/sewercleaningsafety/index.page).

D. Install EFVs according to Gas Design Standard A-93.3, located in Appendix C.

E. For more information and illustrations, see PG&E Standard S5453, "Joint Trench," Exhibit B, *Joint Trench Configurations & Occupancy Guide*, located in Appendix B, "Electric and Gas Service Documents."

F. Underground warning tape is required for all gas service and main pipeline installations as described in Gas Design Standard L-16, "Gas Pipeline Underground Warning Tape," located in Appendix C.

G. Figure 2-2, "Gas-Only Service Trench;" Figure 2-3, "Typical Gas Bell Hole–Plan View;" and Figure 2-4, "Typical Bell Hole Depth–Profile View," show the PG&E required excavation for a gas-only service trench and gas bell hole. All three figures are located on Page 2-9.

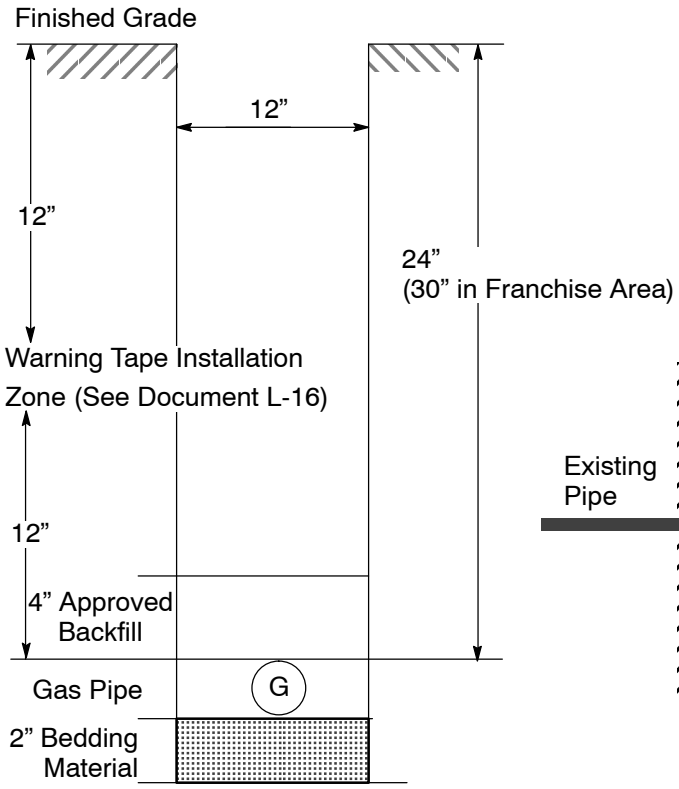

Figure 2-2
Gas-Only Service Trench

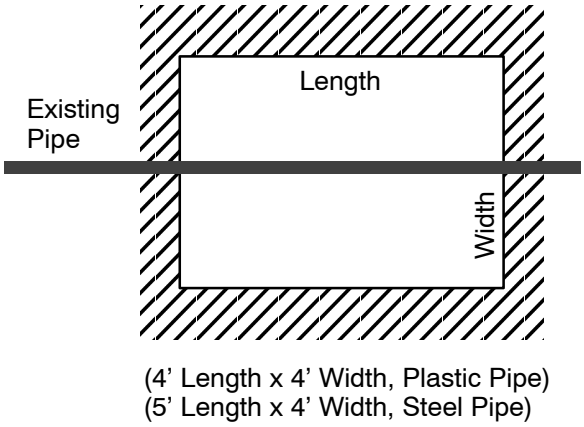

Figure 2-3
Typical Gas Bell Hole–Plan View

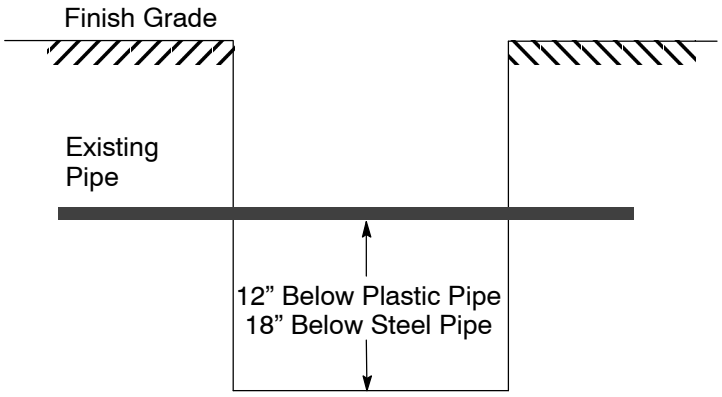

Figure 2-4
Typical Bell Hole Depth–Profile View

Notes in reference to Figure 2-2, Figure 2-3, and Figure 2-4.

1. All dimensions are the minimum required amounts.
2. For Figure 2-2, “Gas-Only Service Trench,” soil compaction must meet PG&E’s and any applicable federal, state, county, and local requirements.

2.3.2. Branch Service Pipe

Branching may be used to provide service to no more than two buildings. The meter installations must be located on adjacent sides of the two buildings being served. Where a branch-service installation is justified, a separate location for the gas meter and electric meter is permissible, if necessary.

Design and install all branch services as described in Gas Design Standard A-42, "Standard Branch Service Installation," and Gas Design Standard A-90, both located in Appendix C.

2.3.3. Curb Valves

A. A curb shutoff valve is required to be installed when one or both of the following conditions exist:

1. The shutoff valve is not readily accessible and outside a building (e.g., in an inclosed structure like a basement or garage).
2. The service line does not meet the requirements for installing EFVs, and the service cannot be squeezed off quickly because of wall-to-wall paving, concrete, the depth of cover, or other surface-related condition. This includes **planned future cover or surface conditions**.

   Typically, a service line installed in a lawn area with normal soil conditions (i.e., no wall-to-wall paving, concrete, or other obstruction over the service line) may be squeezed off quickly.

   NOTE: The best location for installing a service line is **more than 5 feet** from any building, as **close to the property line** as practical. Protect the service line in a covered, durable curb box or valve box that allows the curb valve to be operated easily.

B. PG&E **requires** curb valves on services that supply buildings used for public assembly. Such buildings include, but are not limited to:

- Theaters
- Churches
- Auditoriums
- Arenas
- Schools
- Hospitals

C. PG&E **may require** curb valves on small, gas-distribution systems. These systems include, but are not limited to:

- Mobile home parks (**not** individual mobile homes)
- Condominiums and apartments
- Multiple buildings
- Shopping centers
- Commercial/industrial parks

2.3.4. Joint Utility Service Trenches

When installing underground electric service, PG&E's gas service lateral usually is installed in a common joint trench with the electric service lateral. The joint trench typically includes telephone and cable television facilities. No other utilities or wiring (i.e., water, sewer, private wires) are allowed in a joint trench. See the definition for "Non-Utility" in Appendix A, "Acronyms and Glossary."

When planning to install a joint-trench installation, allow for additional lead time to design and engineer the joint trench. Applicants must be aware of the following requirements.

1. A joint trench composite drawing and an "Authorization for Joint Trench Construction, Form B" both are required when PG&E facilities are located in a trench with other utilities.
2. Applicants either must submit joint trench drawings to PG&E for review, or PG&E can prepare joint trench drawings for applicants at their expense.
3. PG&E must approve the trench's design details **before** trenching begins and facilities are installed.
4. Figure 2-5 below shows the layout of a "Typical Joint-Service Trench."

Separation and clearance details for joint utility service trenches are located in Table 2-1, "Minimum Separation and Clearance Requirements for Trenches," on Page 2-12.

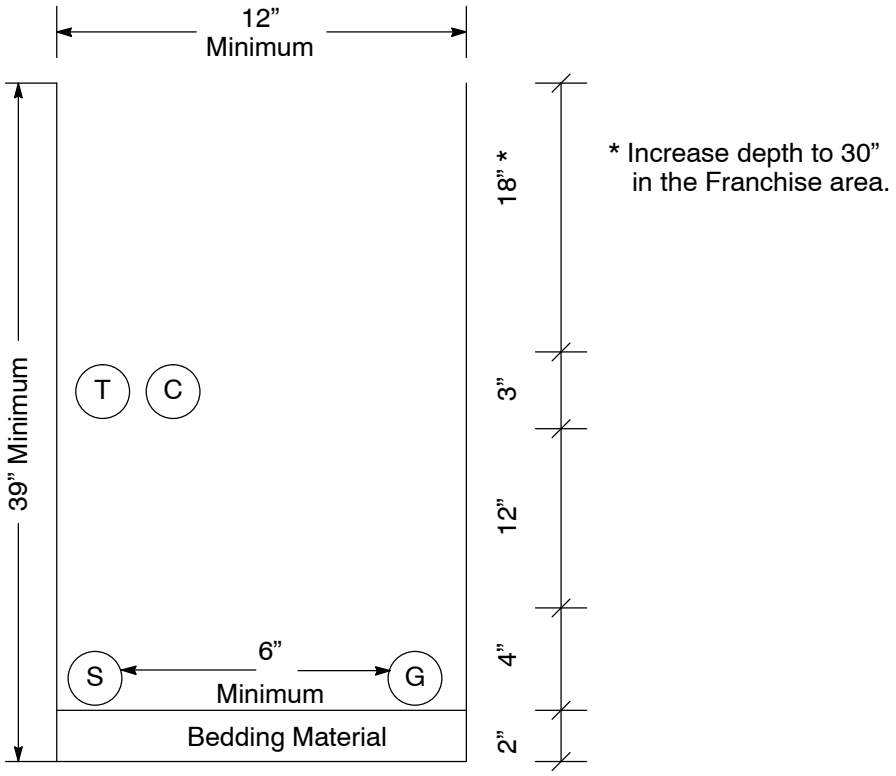

Figure 2-5
Typical Joint-Service Trench

Notes in reference to Figure 2-5 on Page 2-11.

1. Trench depth varies depending on the occupant's facility allotment.
2. Soil compaction must meet PG&E's, and any applicable federal, state, county, and local requirements.
3. A joint service trench must meet all separation and clearance dimensions shown in Table 2-1, below.
4. For more information on Figure 2-5, see PG&E's *Joint Trench Configurations & Occupancy Guide*, located in Appendix B.

Table 2-1 Minimum Separation and Clearance Requirements for Trenches[1]

		G	Duct T	DB T	C	S	P	SL
		(In Inches)						
G	Gas[2]	–	12	12	12	6	12	6
T	Telephone (Duct)	12	–	1	1	12	12	12
T	Telephone (Direct Bury)	12	1	–	1	12	12	12
C	CATV	12	1	1	–	12	12	12
S	Electric Secondary	6	12	12	12	1.5	3	1.5
P	Electric Primary	12	12	12	12	3	3	3
SL	Streetlight[3]	6	12	12	12	1.5	3	1.5
NE	Foreign Electric Sources, Non-PG&E[4]	12	12	12	12	12	12	12

1 All separation clearance distances are in inches.
2 For more information about this table, see PG&E Bulletin TD-5453B-002, "Updated Separation Requirements for Duct in Joint Trench," located in Appendix B.
3 Streetlight circuits **not owned** by PG&E must be installed to meet the requirements in PG&E's *Joint Trench Configurations & Occupancy Guide*. Specifically, applicants must review the requirements for working with a second utility company.
4 Considered a "utility" as defined in PG&E Standard S5453, "Joint Trench."

PG&E does **not** differentiate between the clearances for casing/conduit and pipe. The clearances and installation requirements are the same for both.

For more information on the minimum separation and clearance requirements for service trenches, see Engineering Material Specification Number 4123, "Backfill Sand," located in Appendix B.

When different service facilities (e.g., gas, electric, telecommunications) are installed in close proximity (e.g., in a joint trench), applicants must ensure that the facilities maintain a minimum horizontal separation of 36 inches from the gas riser where they transition from below ground to above ground.

Clearances between other facilities can be reduced **only** when the parties supplying those services or facilities reach a mutual agreement.

NOTE: Applicants must ensure that sufficient space is provided between facilities at all times to allow for safe maintenance and operation.

A. Applicants must **not** install any electrical devices or equipment including wires, cables, metering and telecommunication enclosures, bond wires, clamps, or ground rods within 36 inches of the gas service riser.

This distance can be reduced to 18 inches for electrical devices or equipment certified for National Electric Code (NEC) Class I, Division 2 locations. See Figure 2-19, “Electric and Gas Meter Set Separation Dimensions and Clearances,” on Page 2-31, and Figure 2-21, “Gas Regulator Set Clearance Requirement from Sources of Ignition,” on Page 2-33.

B. Applicants must keep the area immediately behind gas meters, service facilities, and risers free and clear of all other facilities or equipment (i.e., pipes, building vents, or conduits). This requirement also applies to the area between those facilities and the premises or structure being served.

Before installing utility conduits or gas service piping, applicants must discuss the service arrangements and coordinate the meter locations and joint trench requirements with a PG&E project coordinator.

The joint trench composite drawing must include details of the sizes and quantities of all the equipment sharing the trench. **PG&E inspectors must approve the trench after installation is complete.**

Applicants must ensure that the gas and electric meters are installed according to Figure 2-19 on Page 2-31, providing the minimum separation clearances. Refer to the following sections of this manual for acceptable electric meter utility locations.

- Section 5, “Electric Metering: General”
- Section 6, “Electric Metering: Residential”
- Section 7, “Electric Metering: Commercial, Industrial, and Agricultural”
- Subsection 2.4., “Set Requirements for Gas Meters” (on Page 2-18)

Wet-utility piping or facilities are **not** permitted in a joint trench. Examples of wet utilities that are not allowed in a joint trench include:

- Propane lines.
- Pressurized water lines.
- Sewer, sanitary, or storm drains.

Both PG&E Standard S5453, Exhibit B, and the *Joint Trench Configurations & Occupancy Guide*, located in Appendix B, describe the requirements for separating a wet utility from a joint trench.

When applicants want to install facilities in a joint trench other than those listed in this section, PG&E requires a **written** request that includes a justification for the exception. Applicants must submit their requests to PG&E for review and approval **before** beginning work on a joint trench.

2.3.5. Multiple Buildings Located on One Lot

A. Two Buildings Located on One Lot

1. PG&E may furnish a separate gas service to each building if it does **not** require an additional gas distribution main extension. Figure 2-6, "Separate Gas Services for Two Buildings on a Single Lot," on Page 2-13, and Figure 2-7, "Separate Gas Services for Two Buildings on a Corner Lot," on Page 2-15, show examples of two premises on one lot with separate gas services.

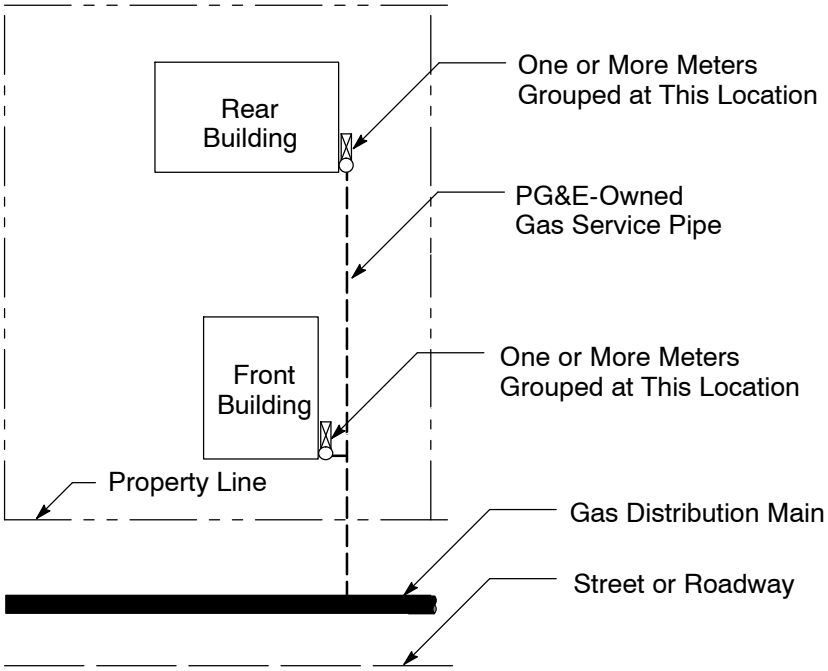

Figure 2-6
Separate Gas Services for Two Buildings on a Single Lot

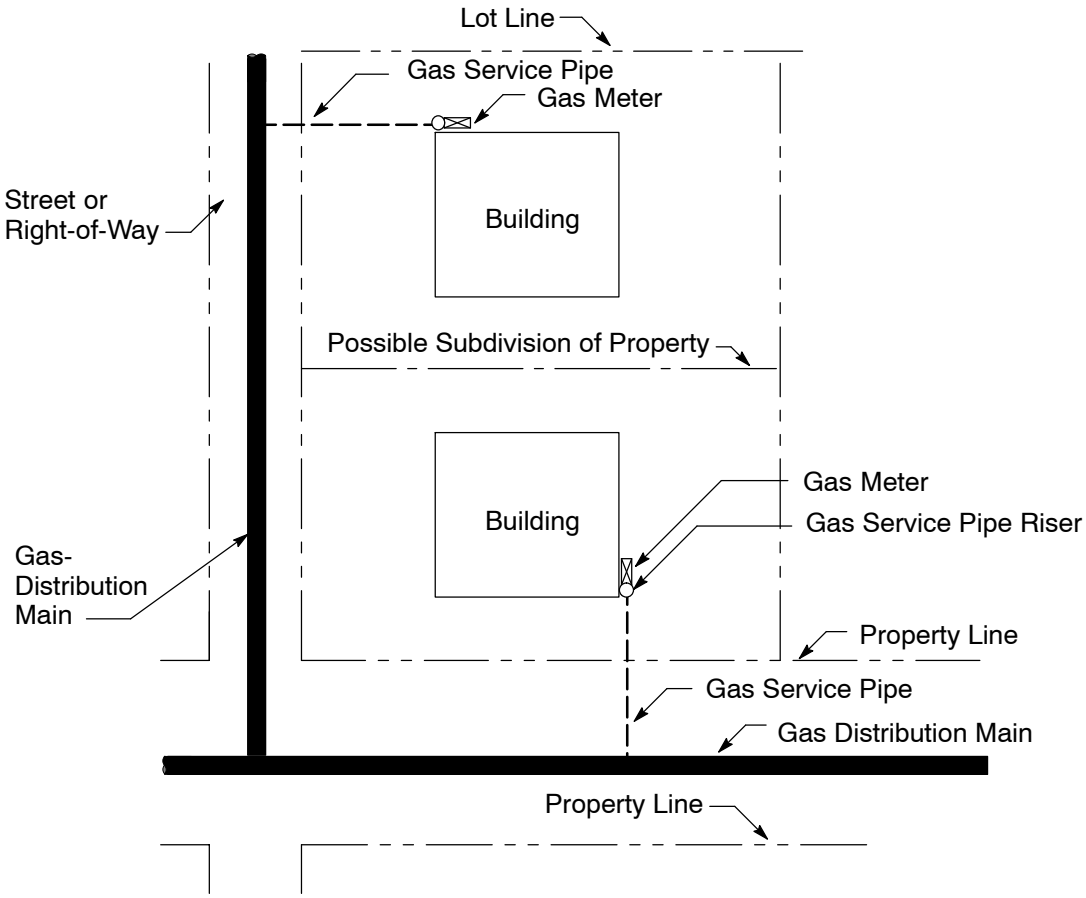

Figure 2-7
Separate Gas Services for Two Buildings on a Corner Lot

2. When more than one gas meter is required to serve a single building, the meters for that building must be grouped at a common location that has been approved by PG&E. See Subsection 2.4.2.E., "Multiple Gas Meter Connection Requirements for Single and Double (Banked) Manifold Connections," on Page 2-33, for grouping requirements when locations have multiple meters.

B. Three or More Buildings Located on One Lot

When two buildings, either single family or multifamily, are on the same lot and located in close proximity to each other, PG&E may install a gas distribution main on the applicants' properties. For specific requirements, see PG&E's main-extension rule, *Gas Rule 15*, and service-pipe extension rule, *Gas Rule 16*. Before a gas distribution main can be installed, applicants must ensure that the following conditions are met.

1. There must be a protected and accessible location on the property.
2. A satisfactory right-of-way, easement, or permit must be available at no cost to PG&E.

Typically, PG&E installs a single, gas-service pipe to each building, as described in *Gas Rule 16*.

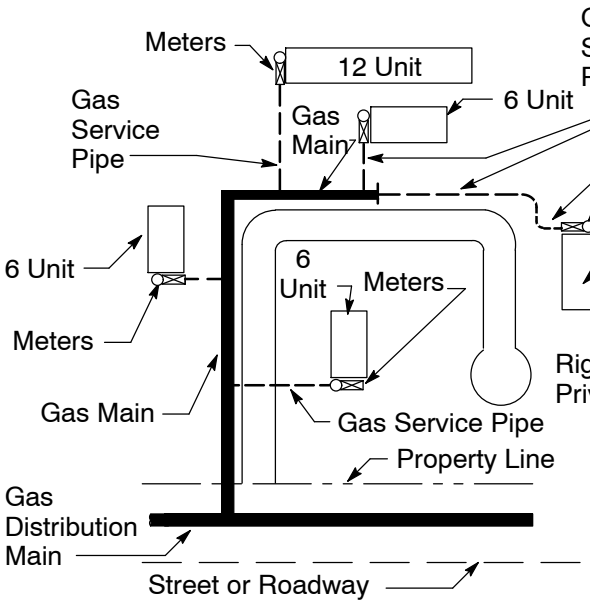

Figure 2-8
Apartments With Grouped Meter Locations

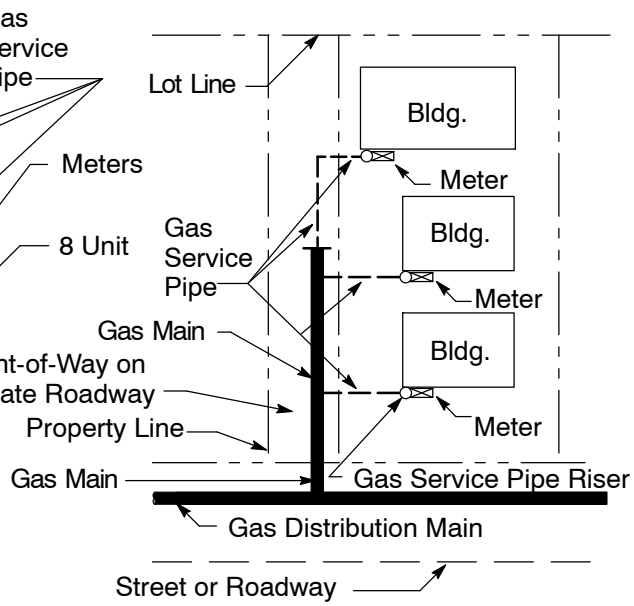

Figure 2-9
Individually Metered Buildings

Typical Gas Distribution Main and Service Pipe Installation for Property With Three or More Buildings

Multifamily residential complexes are subject to a California Public Utilities Commission (CPUC) mandate specifying that each unit is metered individually. For more information, see Public Utilities Code, Section 780.5, found on the Internet at http://www.legaltips.org/california/california_public_utilities_code/761–788.aspx.

Exception: A single gas meter may serve an entire complex when the gas is used only for central heating systems (i.e., space, water) that supply all tenants in common, and when each individual unit does **not** use gas appliances that require combustion venting. Refer to *Gas Rule 18*, "Supply to Separate Premises and Submetering of Gas."

When each dwelling unit includes ground-floor space, each unit may have an individual service pipe and separate meter location **if**:

1. Sufficient meter space is provided.
2. Local ordinances do **not** prohibit such arrangements.

When it is practical, install the gas service pipe in a joint trench with the electric service.

A multifamily apartment building with individually metered spaces may have more than one service connection under the standard provisions of *Gas Rule 16* if **all** of the following conditions exist.

1. An unreasonable burden, in PG&E's opinion, will be placed on the customer restricted to one service connection.
2. Service connections are a minimum of 150 feet apart.
3. Each service connection provides service to a minimum group of four meters.
4. Local code or ordinance allows the multi-service arrangement.

   NOTE: For more information, see PG&E's *Gas Rule 16*, Section C.2, "Number of Extensions."

5. Local code or ordinance allows for the multi-service arrangement.

See Subsection 2.4.2.E. on Page 2-33 for specific requirements when locations have multiple meters.

2.3.6. Mobile Home Parks

Gas mains and services in mobile home parks must meet essentially the same standards for gas installations that are required for residential and nonresidential applications.

In addition, applicants must **not** install gas mains, services, and meters in the following areas.

- On steep slopes.
- In areas where landscaping restricts access.
- Under existing or proposed structures including mobile homes, porches, and stairs leading to porches.

Applicants should install the gas distribution mains in the roadway, when it is practical to do so, and in joint trenches, when it is feasible. Locate distribution mains 10 feet from the face or foundation of any building as described in Gas Design Standard A-90, located in Appendix C. On private property, ensure that rights-of-way are at least 10 feet wide for mains and at least 5 feet wide for service piping. Only use easements for utility installations. Table 2-1 on Page 2-12 shows the minimum separation and clearance requirements for service trenches.

NOTE: Curb valves are **not** recommended for individual mobile homes; however, a curb valve may be installed on a park's community building.

NOTE: Refer to Gas Design Standard J-12.4, "Mobile Home/Manufactured Home Meter Set Installation." Contact your local project coordinator for this document.

Also see the gas meter set requirements in Subsection 2.4.2.A.3., "Mobile Home Parks," on Page 2-22.

2.4. Set Requirements for Gas Meters

The following information describes the meter set requirements for gas services.

2.4.1. Gas Pressure

The following information describes the types of delivery pressures available with gas service.

A. Standard Delivery Pressure

PG&E typically will provide gas service pressure to the service delivery point at 7 inches of water column (WC). This is approximately 1/4 psig, as measured at the gas meter outlet.

B. Elevated Delivery Pressure

PG&E may be able to provide gas service at higher gas-delivery pressures, depending on the location of the applicant's facility and on the requirements of the gas system serving that location. PG&E maintains sole authority to determine if the elevated delivery-pressure service is available at a specified location.

In all elevated delivery-pressure service situations, PG&E reserves the right to reduce the gas service pressure to standard delivery pressure, as outlined in *Gas Rule 2*, "Description of Service," when:

- PG&E determines that the elevated gas pressure is no longer available.
- The current delivery pressure is detrimental to PG&E's gas distribution system.

NOTE: When providing elevated gas-pressure service, PG&E can incur additional costs. In these cases, special facilities charges will apply as described in *Gas Rule 2*. Applicants must pay these charges **before** PG&E can provide the services.

The following two numbered items describe cases where special facilities charges can apply.

1. **For 2-psig Services:** In many PG&E service territories with sufficient distribution operating pressure, 2-psig delivery pressure may be available. When completing PG&E's "Application for Service" form, applicants must request 2-psig gas-service delivery pressure in the "Load Information" section. In most cases, special facilities charges will **not** apply for a 2-psig delivery request. As mentioned previously, PG&E will determine if special facilities charges apply.
2. **For Services Higher Than 2 psig:** Elevated gas-metering pressures higher than 2 psig may be available from the local gas distribution system. PG&E must ensure that tapping into this existing service will **not** be detrimental to the operation of that gas system.

When requesting elevated gas-service delivery pressure higher than 2 psig, applicants must follow these steps.

a. Contact the local PG&E project coordinator as soon as possible (preferably in the **planning** stage for a new or remodeled building).

b. Fill out the appropriate PG&E "Application for Service" form and note the gas-service delivery pressure being requested in the "Load Information" portion of the form.

c. Submit a formal, written request and justification for elevated gas-service delivery pressure (e.g., the hypothetical houseline diameter size at standard delivery pressure, the appliances' specification requirements).

d. Submit a houseline piping schematic.

e. Submit the manufacturer's appliance specifications to ensure that the appliances will operate as designed.

f. Provide detailed load information for all appliances and their intended use.

C. Back-Pressure Protection

PG&E may require the applicant to install a check valve after the PG&E gas meter's set point of connection. This check valve prevents backflow. PG&E determines the need for check valves on a case-by-case basis. The applicant is required to have a maintenance plan and to maintain the check valve.

For all higher-than-standard delivery pressure, PG&E recommends that applicants hire a qualified person, such as plumber or contractor, to review all of the applicant-owned gas piping, venting, and appliance installations for the gas pressure service being requested. The qualified person can ensure that the installations comply with all local, state, and federal codes, standards, and regulations. Specifically, the qualified person helps to ensure that the *Uniform Plumbing Code* is enforced based on the installation requirements of the local governing agency in the applicant's location.

2.4.2. Gas Meter-Set Locations

Typically, PG&E provides only one meter set (in an outside location) for each dwelling unit and one service lateral to each building. PG&E may require that the meter be set at the property line if **either** of the following two conditions are met:

1. The building is back more than 200 feet from the property line.
2. A potential hazard or unusual site condition threatens the service lateral between the property line and the building. Some examples of unusual site condition are plowed land, ditches, bridges, ponds, waterways, leach fields, bioswales, inaccessible security areas, or other deterrent, obstacle, or hazard.

PG&E prefers that rotary meter sets be located outside of and away from the building.

PG&E must have unrestricted, drive-up access for service trucks and adequate space to install and maintain the meter.

Any deviations require advanced approval from PG&E.

For specific information, see *Gas Rule 16*, Section C, Number 5, "Unusual Site Conditions." Figure 2-10, "Property Line Installation," below, shows a property-line meter set installation.

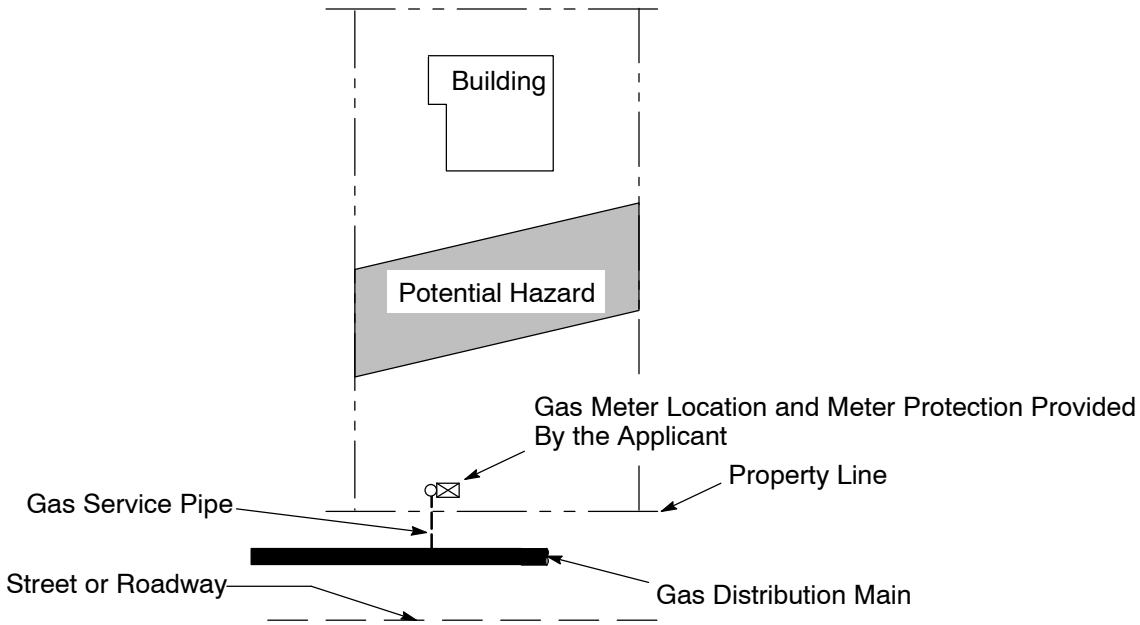

Figure 2-10
Property Line Installation

A. Descriptions of Acceptable Meter Locations

For descriptions of, and specific requirements for, acceptable gas meter locations, see Gas Design Standard J-15, "Gas Meter Locations," located in Appendix C.

Figure 2-11, "Acceptable Locations for Gas Meter Installations," on Page 2-22, and Figure 2-12, "Acceptable Meter Locations for Mobile Home Parks," on Page 2-23, illustrate locations that are acceptable for installing typical meter sets.

1. Approved Meter Set Locations (In Order of Preference)

NOTE: For specific requirements and definitions, see Gas Design Standard J-15, "Gas Meter Locations," located in Appendix C.

a. Meter set located outside a building.

b. Meter set located outside in an alcove or enclosure. *

*An alcove is an exterior space that is recessed into a building or wall. The alcove's width can vary depending on the meter set. PG&E provides final dimensions after confirming the meter size.

For single-diaphragm meters, applicants must use the area dimensions shaded in Figure 2-14 on Page 2-26 and Figure 2-15 on Page 2-27 (depth not to exceed 36 inches).

For single-rotary meters, use the area dimensions shaded in Figure 2-16 on Page 2-28, Figure 2-17 on Page 2-29, and Figure 2-18 on Page 2-30 (depth not to exceed 36 inches and height at 8 inches).

A manifold located in an alcove may require a custom design depending on the configuration.

If a gate is proposed in front of the alcove, it must have a minimum 50% open area. Then see Subsection 2.4.2.F.7., "Gas Meter Set Enclosures," on Page 2-38.

Contact your local PG&E project coordinator for more information.

c. Meter set located in a breezeway.

d. Meter set located in a cabinet.

NOTE: PG&E will consider approving Numbers e. and f., below, only after Numbers a. through d. on Page 2-21 are ruled out as options.

e. Meter set located in a buried vault, pit, or box.

f. Meter set (excluding service shutoff valve) located inside a building in a gas meter room.

2. Single Residential, Apartment, or Nonresidential Building

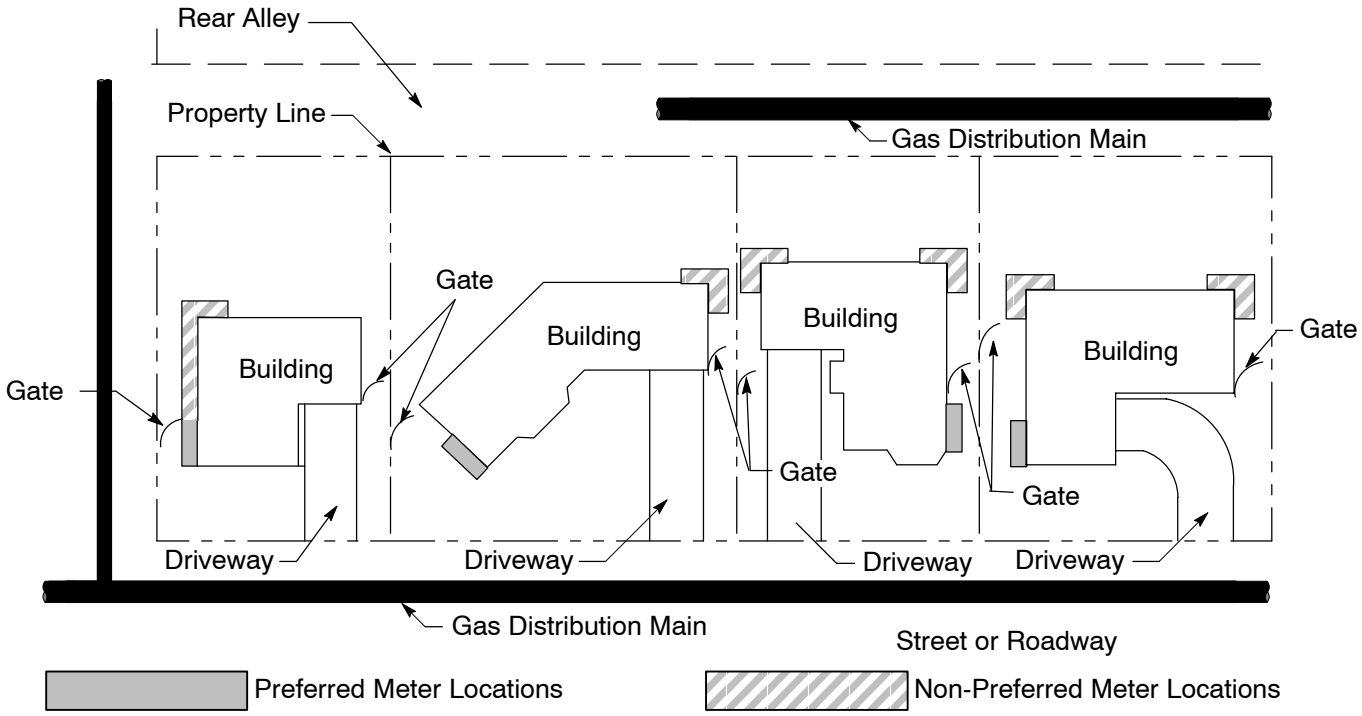

Figure 2-11
Acceptable Locations for Gas Meter Installations

NOTE: When the meter set from the gas distribution line is located in a rear alley, applicants should locate the meter set outside of any gated or fenced area. This allows easy access for PG&E employees when maintenance is required.

3. Mobile Home Parks

For new mobile home parks, the mobile home park owner or operator must provide a separate and independent meter for each lot. New mobile home parks are not allowed to have submetering facilities.

Typically, meters are located on flat surfaces that are not obstructed by landscaping. Meter locations cannot be obstructed by porches and stairs leading to porches. Figure 2-12, on Page 2-23, represents several acceptable meter locations within a typical mobile home park.

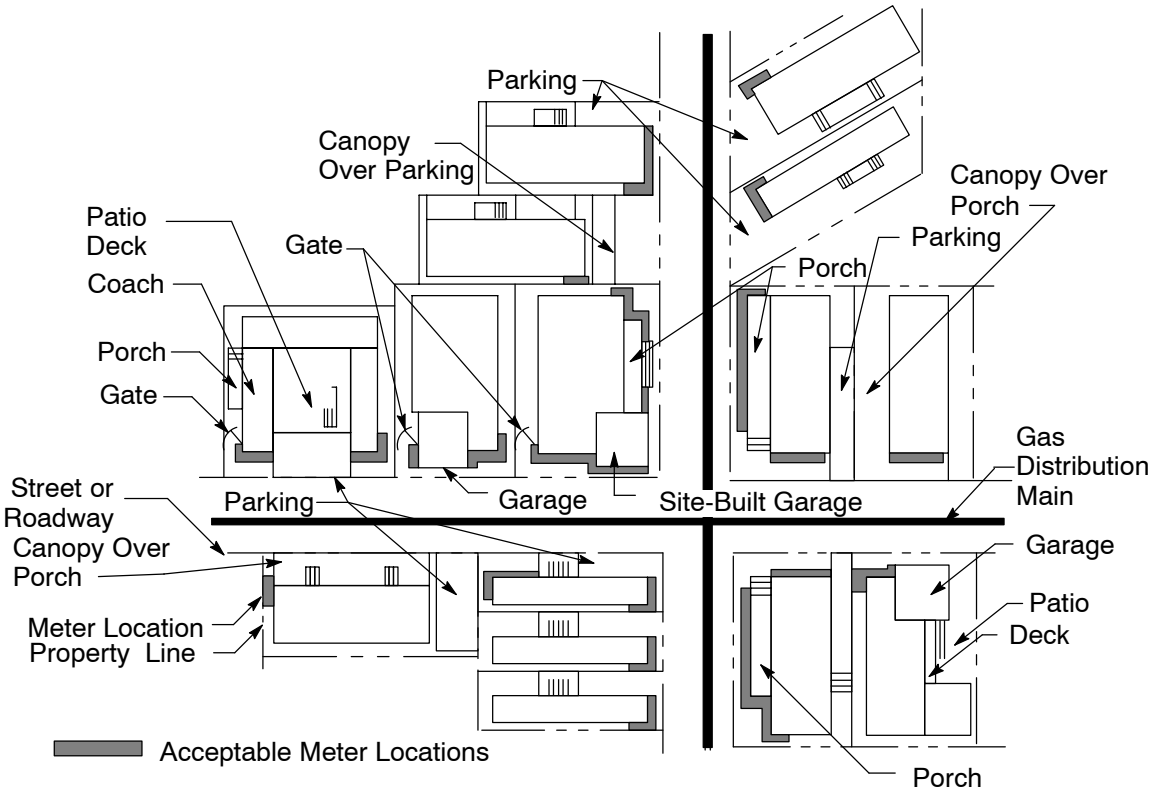

Figure 2-12
Acceptable Meter Locations for Mobile Home Parks

PG&E does **not** provide metering facilities if they will be attached directly to a "movable" mobile home unit that is installed or set up in any location, including a mobile home park. Before PG&E provides metering facilities, the mobile home must meet **both** of the following conditions.

a. **Fixed in Place:** The mobile home typically does not have either running gear or wheels and is not capable of being moved to another location.

b. **Installed on a Foundation System:** The mobile home must have a foundation system, as described in *State of California Title 25*, Division 1, Chapter 2, Article 7, Section 1333, "Foundation Systems."

> "If a mobile home park contains lots or site spaces that are set up to accommodate "movable" mobile home units, PG&E will install and supply the park using utility-approved service and metering facilities at a fixed location other than the mobile home. In these cases, applicants are responsible for connecting their mobile home units to those fixed metering facilities."

4. Subsidence Areas

In subsidence areas, the acceptable location requirements are the same as the requirements outlined in Subsection 2.4.2.A., "Descriptions of Acceptable Meter Locations," on Page 2-20. PG&E may require a flexible connector to be installed between the gas meter outlet and the houseline. These connectors may require additional clearance space. See Figure 2-13, "Flex-Hose Meter Set–Residential and Small Commercial," located below, for a sample installation. Contact your local project coordinator for Gas Design Standard J-58, "Flex Hose Meter Set Installation," which provides information about diaphragm and rotary meters in subsidence areas.

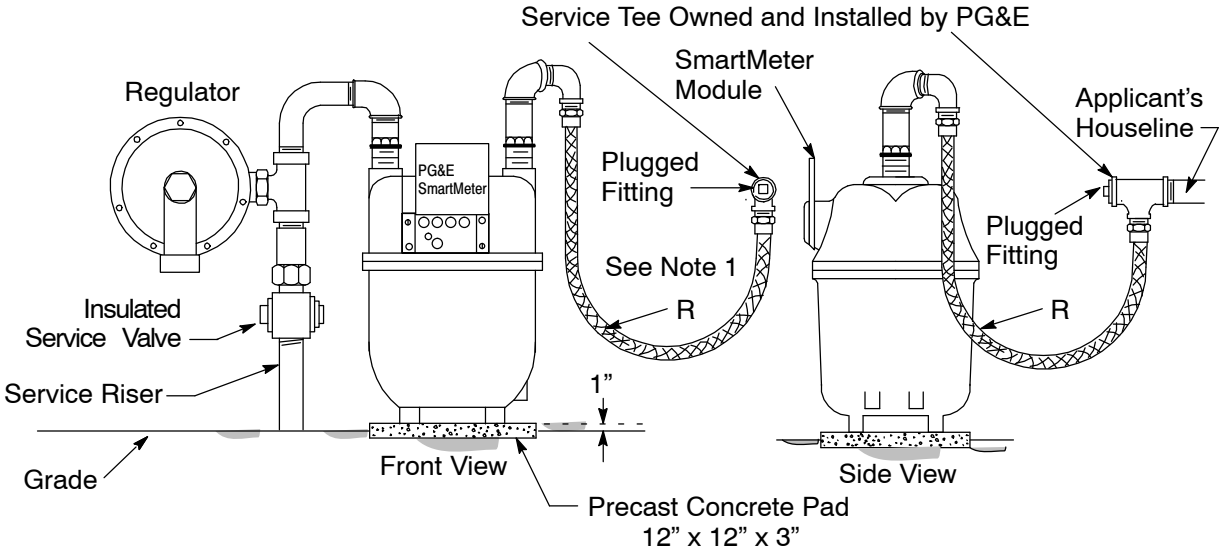

Figure 2-13
Flex-Hose Meter Set–Residential and Small Commercial

Notes in reference to Figure 2-13.

1. Hoses have a minimum bending radius (R) based on the projected settlement of the ground and on the size of the hose.

B. Descriptions of Unacceptable Meter Locations

For new or remodeled buildings, **do not locate** gas meter sets in the following areas.

1. In curb meter boxes or vaults.
2. In living quarters, closets, toilet rooms, or bathrooms.
3. In garages without properly vented meter cabinets.
4. Behind fences that applicants can lock.
5. On steep slopes.
6. In areas where landscaping restricts access.

7. Within engine, boiler, heater, or electrical-equipment rooms.
8. Under display platforms or show windows in commercial buildings. (This includes any permanent, elevated display floors or platforms associated with the window where the purpose of the window is to present a display to the public.)
9. In contact with the soil, in a depression below general ground level, or where potentially corrosive materials are likely to contact the meter set.
10. In poorly ventilated breezeways.
11. In crawl spaces under buildings or decks.
12. Near a driveway, drive-thru, or other traveled area. Gas meters located in traveled ways must be adequately protected from passing vehicles as described in Gas Design Standard J-95, "Meter Guard Design and Installation Arrangement," located in Appendix C.
13. In a metallic cabinet, room, or location that blocks or interferes with the radio frequency signal transmissions that are necessary for PG&E to operate its SmartMeter™ Advanced Meter Reading system.
14. In any location that does not provide the required working space. The height dimension is 6 feet, 6 inches of clearance above ground and the depth dimension is 3 feet of clearance in front of the gas meter. See the figures in Subsection 2.4.2.C., "Single Gas Meter Connection Requirements," below, for the different width dimensions.

    NOTE: All meter locations are subject to PG&E approval.

C. Single Gas Meter Connection Requirements

The figures beginning on Page 2-26 illustrate typical meter-set dimensions and working clearance requirements based on the total diversified loads and stated delivery pressure.

NOTE: The actual meter-set configuration, including the dimensions, may be different depending on field conditions and restrictions.

Consult with your local project coordinator for the exact meter location and houseline placement and orientation. Customer-installed equipment (e.g., earthquake valves) must be installed on customer houseline and cannot reduce the minimum riser-to-houseline dimension.

A commercial meter set may require the riser to be located farther away from the face of the building to accommodate the meter's installation. Your local project coordinator can verify th at risers and houselines are installed and meet all minimum clearance requirements before scheduling the meter set installation.

1. Figure 2-14 represents a typical gas meter kit with 0 through 350 scfh at 7 inches WC or 0 through 600 scfh at 2 psig. Reverse sets are not allowed. The houseline must be to the right of the gas service riser.

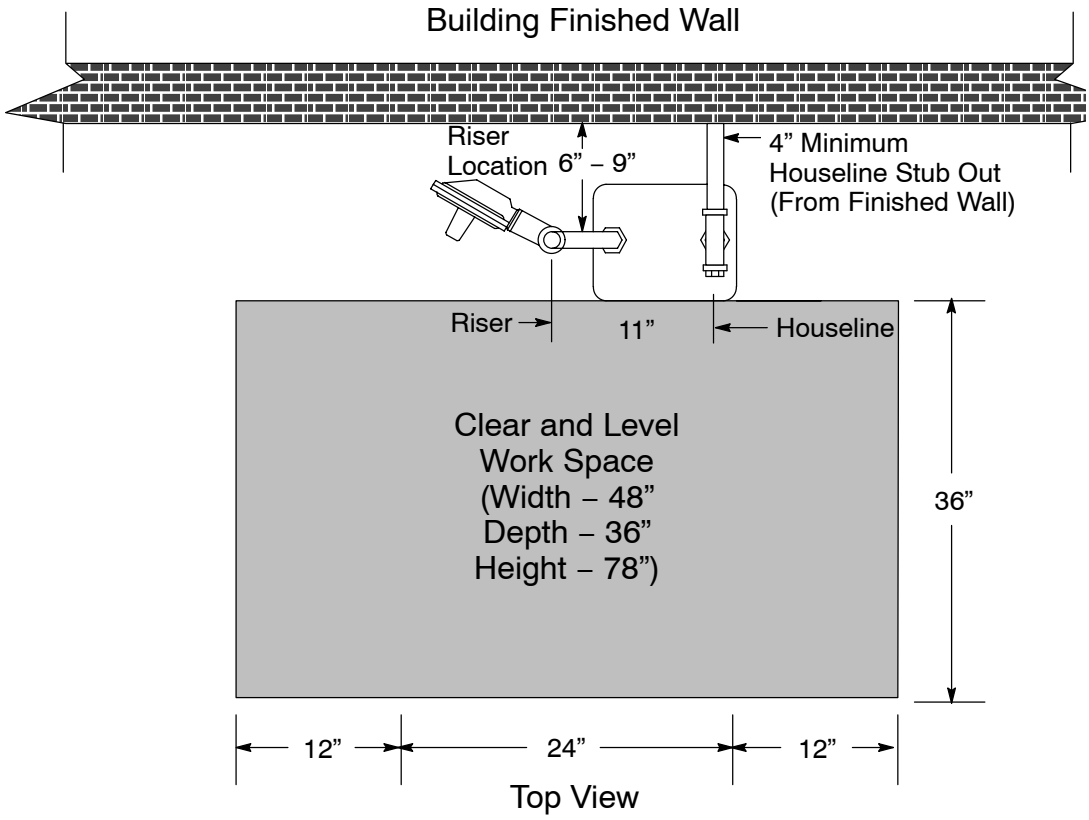

Figure 2-14
Typical Residential Gas Meter Connection

2. Figure 2-15 represents a typical gas meter kit with 351 through 1,400 scfh at 7 inches WC or 601 through 2,400 scfh at 2 psig. Do not use reverse sets for 400 through 600 class meters (i.e., 400, 425, 630). The houseline must be to the right of the gas service riser.

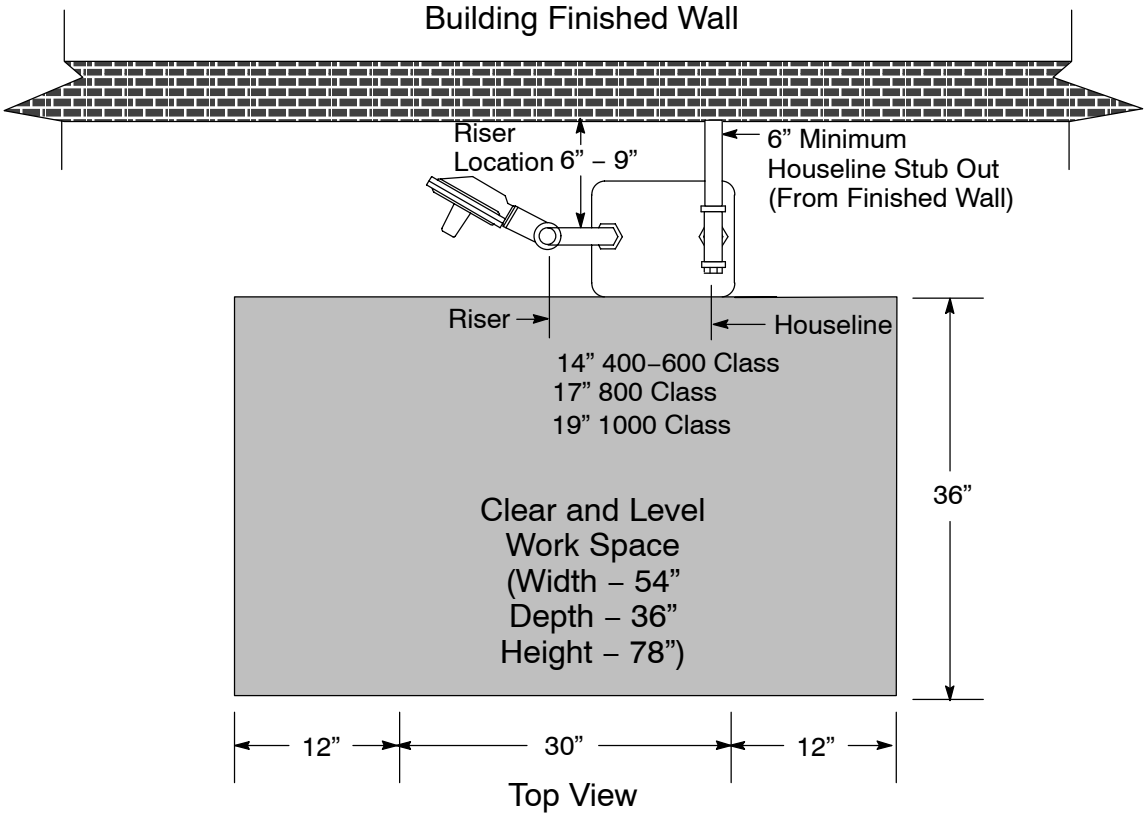

Figure 2-15
Typical Gas Meter Connection for 400 to 1,000 Class Meters

3. Figure 2-16 represents a rotary gas meter with 1,401 through 3,000 scfh at an approved delivery pressure.

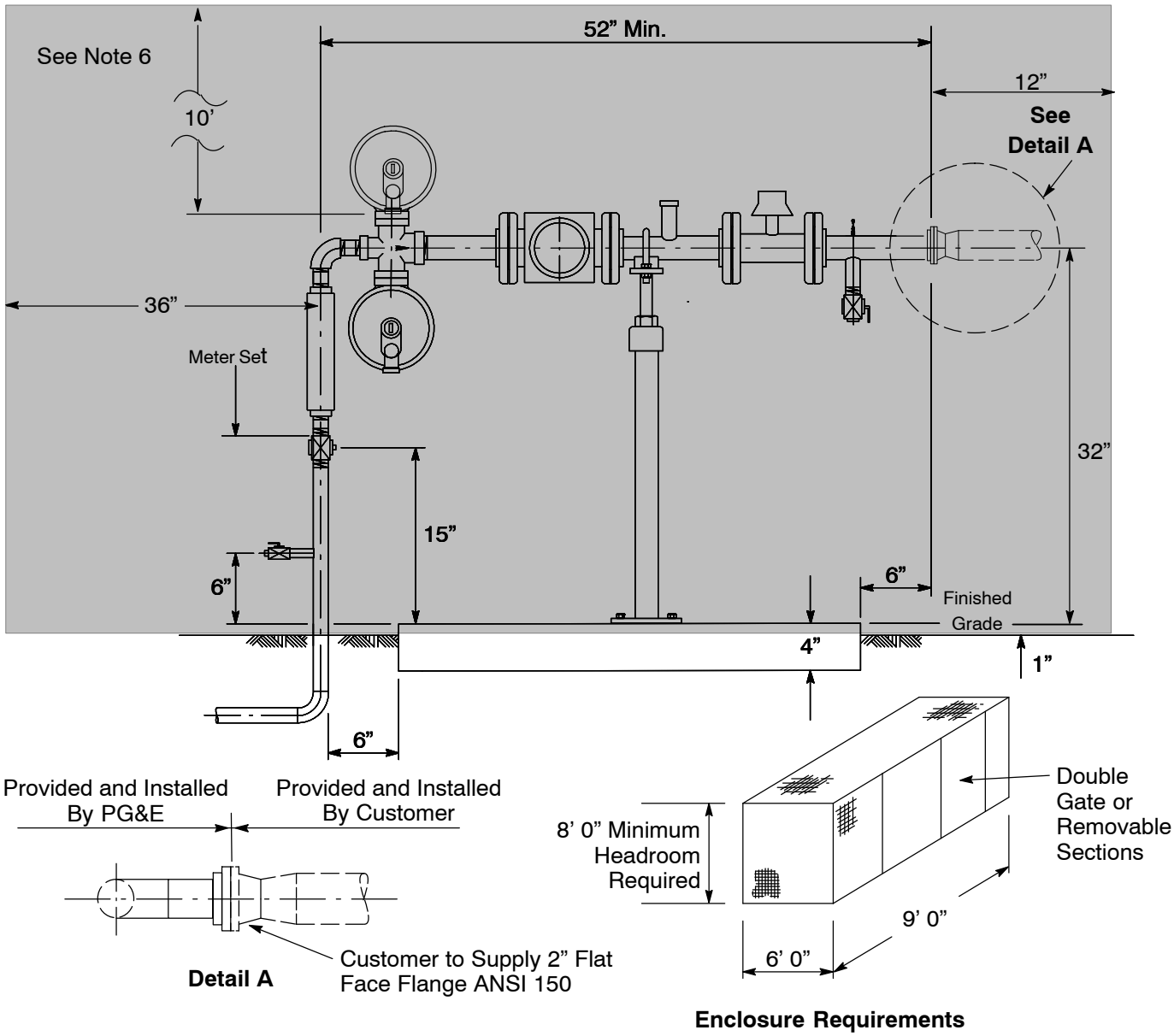

Figure 2-16
Gas Meter Connection Using a 1.5M or 3M Rotary Gas Meter

Notes in reference to Figure 2-16.

1. Customers must provide a 40 inches x 36 inches x 4 inches concrete pad with minimum #4 rebar.
2. Customers must provide a 2 inch ANSI 150 Flat Face flange to connect to PG&E facilities.
3. If the meter set is built next to a building wall, place the vertical leg of the riser and the houseline 20 inches from the wall. This ensures that the meter set components are built in a straight line.
4. The finished grade must be below the bury-line marking on the service riser.
5. PG&E's weld elbow is optional.
6. The regulator vent must not terminate near any sources of ignition or openings into the building. The riser must be a minimum of 36 inches from sources of ignition and from any openings into the building. This clearance area extends 10 feet above the highest regulator vent, 36 inches below the lowest regulator vent, and 12 inches beyond the farthest PG&E meter-set equipment.

4. Figure 2-17 represents a rotary gas meter with 3,001 through 7,000 scfh at an approved delivery pressure.

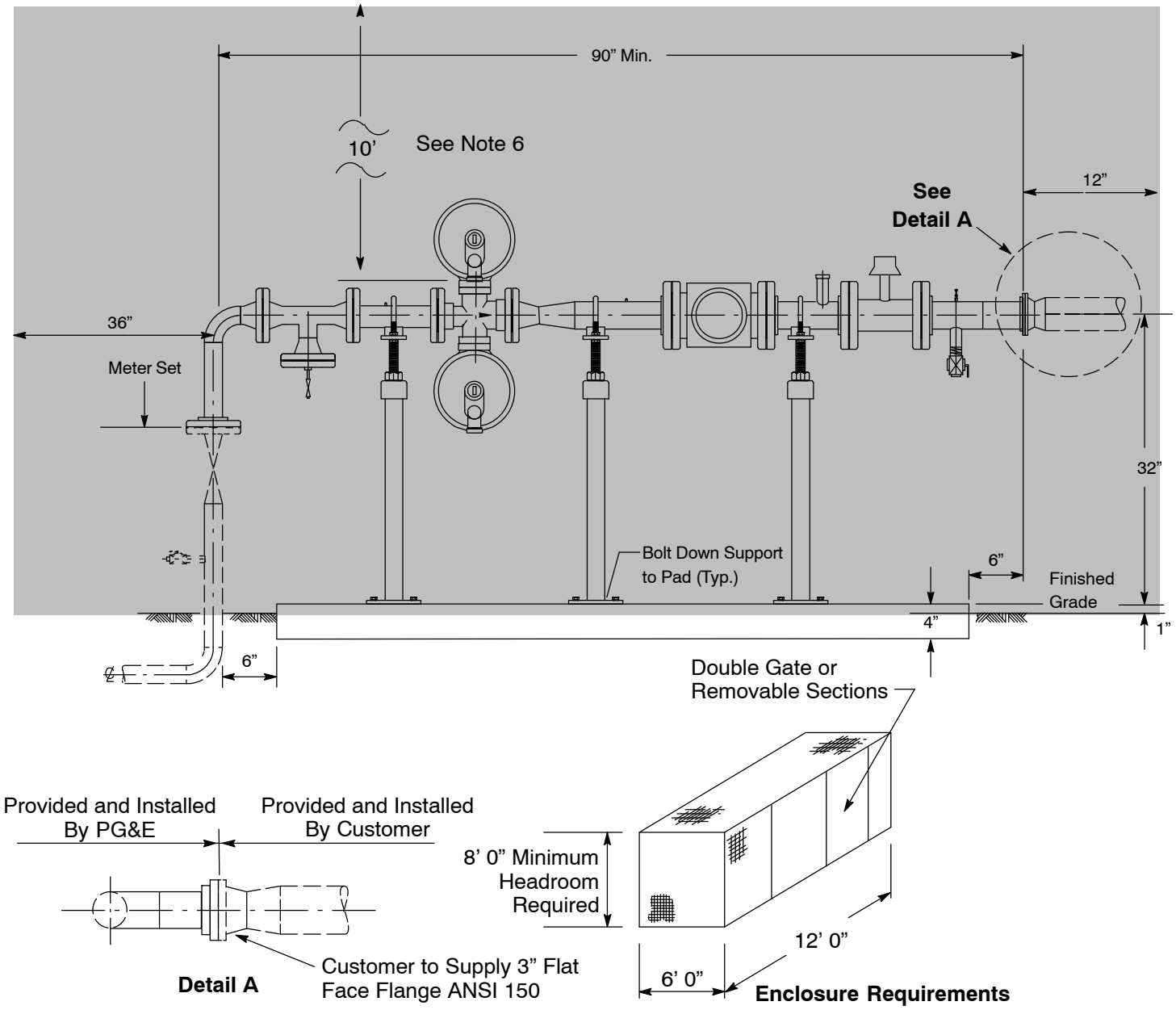

Figure 2-17
Gas Meter Connection Using a 5M or 7M Rotary Gas Meter

Notes in reference to Figure 2-17.

1. Customers must provide a 78 inches x 36 inches x 4 inches concrete pad with minimum #4 rebar.
2. Customers must provide a 3 inch ANSI 150 Flat Face flange to connect to PG&E facilities.
3. If the meter set is built next to a building wall, place the vertical leg of the riser and the houseline 20 inches away from the wall. This is to ensure the meter set components are built in a straight line.
4. The finished grade must be below the bury-line marking on the service riser.
5. PG&E’s weld elbow is optional.
6. The regulator vent must not terminate near any sources of ignition or openings into the building. The riser must be a minimum distance of 36 inches from sources of ignition and openings into the building. This clearance area extends 10 feet above the highest regulator vent, 36 inches below the lowest regulator vent, and 12 inches beyond the farthest PG&E meter-set equipment.

5. Figure 2-18 represents a rotary gas meter with 7,001 through 16,000 scfh at an approved delivery pressure.

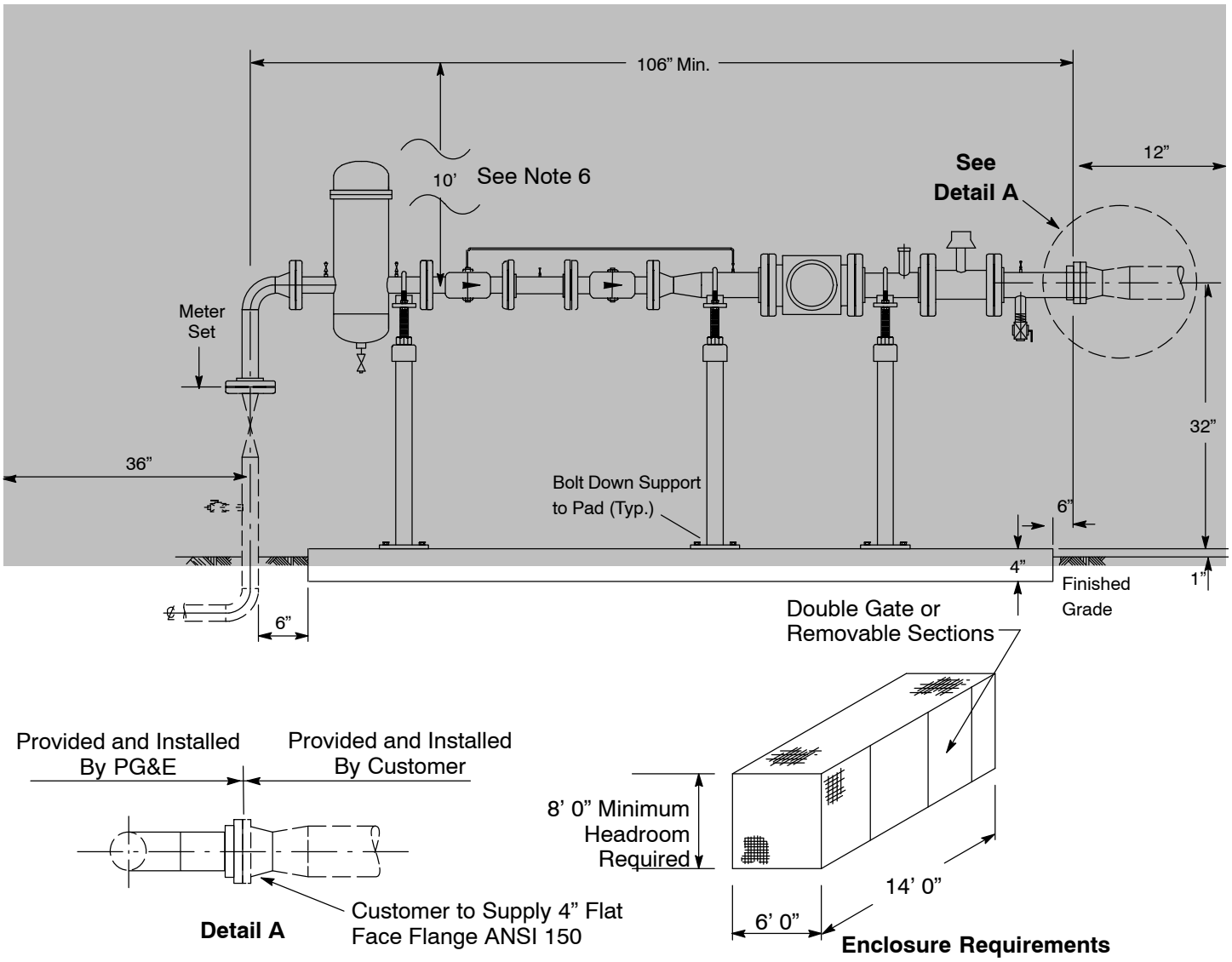

Figure 2-18
Gas Meter Connection Using an 11M or 16M Rotary Gas Meter

Notes in reference to Figure 2-18.

1. Customers must provide a 96 inch x 36 inch x 4 inch concrete pad with minimum #4 rebar.
2. Customers must provide a 4 inch ANSI 150 Flat Face flange to connect to PG&E facilities.
3. If the meter set is built next to a building wall, place the vertical leg of the riser and the houseline 20 inches away from the wall. This ensures the meter set components are built in a straight line.
4. The finished grade must be below the bury-line marking on the service riser.
5. PG&E's weld elbow is optional.
6. The regulator vent must not terminate near any sources of ignition or openings into the building. The riser must be a minimum distance of 36 inches from sources of ignition and openings into the building. This clearance area extends 10 feet above the highest regulator vent, 36 inches below the lowest regulator vent, and 12 inches beyond the farthest PG&E meter-set equipment. Contact your local project coordinator about possible locations for regulator vents. (The regulations for large, industrial meter sets can vary.)

D. Minimum Meter Set Clearance Requirements

Figure 2-19, “Electric and Gas Meter Set Separation Dimensions and Clearances,” below; Figure 2-20, “Gas Meter Set Clearance From Building Openings,” on Page 2-32; and Figure 2-21, “Gas Regulator Set Clearance Requirement From Sources of Ignition,” on Page 2-33, all represent various metering facilities’ clearance requirements. If applicants install enclosures on their premises, the enclosures must meet the specifications provided in these illustrations.

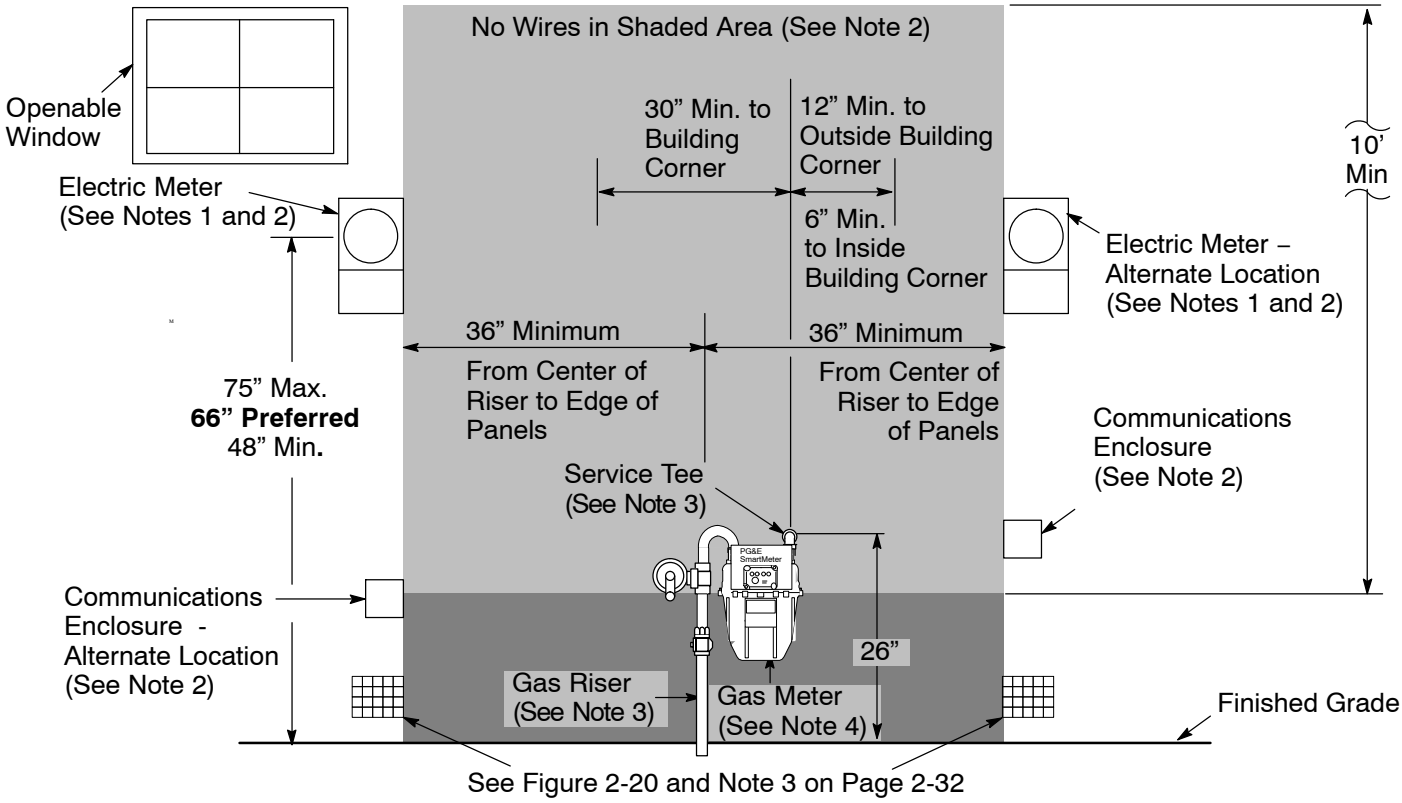

Figure 2-19
Electric and Gas Meter Set Separation Dimensions and Clearances

Notes in reference to Figure 2-19.

1. Electric meter panel locations are subject to utility approval and must comply with the applicable code requirements. PG&E does **not** have specific requirements for the distance from the electric panel to the outside building corner. See Section 5, “Electric Metering: General,” for properly locating the electric meters. See Subsection 5.4.4., “Working Space,” on Page 5-11, for electric meter working space.
2. Applicants must **not** install any electrical devices or equipment, including wires, cables, metering enclosures, telecommunication enclosures, bond wires, clamps, or ground rods within the shaded area around the gas meter. The 36-inch distance can be reduced to 18 inches for electrical devices or equipment certified for NEC Class I, Division 2 locations.
3. Place the gas service riser 6 inches to 9 inches from the finished wall. The completed customer houseline at the service delivery point must extend a minimum of 4 to 6 inches from the finished wall where the meter is to be set, and must be 26 inches above the finished grade. See Figure 2-14 on Page 2-26, Figure 2-15 on Page 2-27, and Subsection 2.5. on Page 2-42.
4. The minimum dimensions and clearances in Figure 2-19 are good for gas meters up to the 1,000 class. See Figure 2-14 and Figure 2-15 on Pages 2-26 and 2-27 for illustrations of clear and level working space in front of the gas meter.

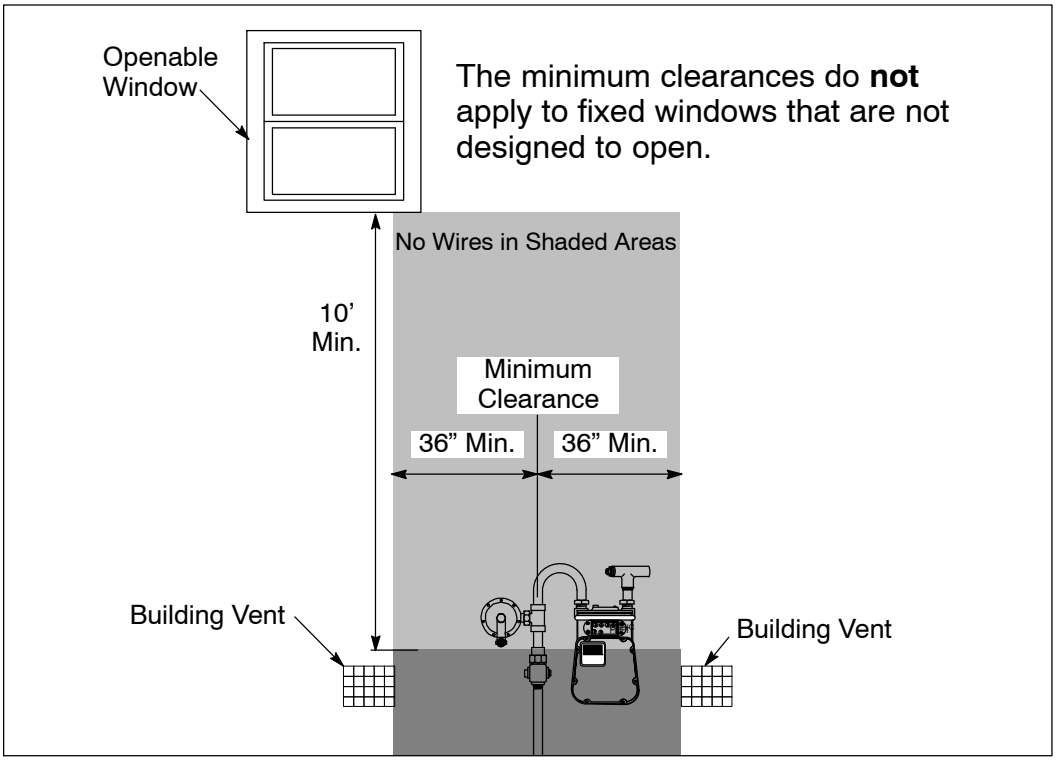

Figure 2-20
Gas Meter Set Clearance From Building Openings

Notes in reference to Figure 2-20.

1. Do **not** place gas regulator vents under display platforms or show windows in commercial buildings. This includes any permanent, elevated display floors or platforms associated with the window, where the purpose of the window is to present a display to the public.
2. Do **not** place gas regulator vents under building overhangs where the overhang is likely to direct venting gas to a building opening.
3. The building vent openings, sources of ignition, and above-ground water sources must be a minimum of 36 inches away from the riser.
4. Applicants must not install water spigots, lines, gutter systems, or other above-ground sources within 36 inches of the gas or electric facilities.
5. For a large meter or multi-meter manifold, the minimum separation requirement for sources of ignition, opening to buildings or sources of above-ground water, extend 12 inches beyond the farthest connection to the applicant houseline, and 10 feet above the highest regulator vent.

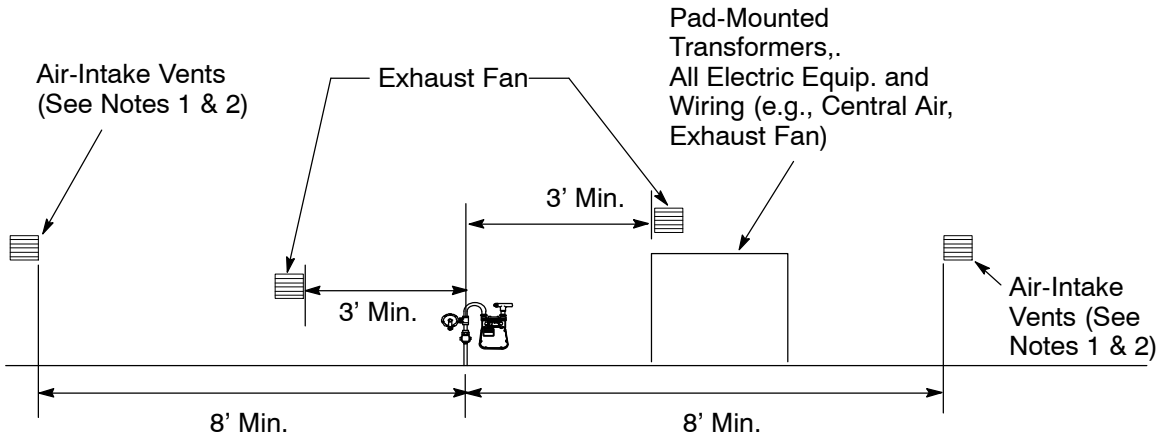

Figure 2-21
Gas Regulator Set Clearance Requirement from Sources of Ignition

Note in reference to Figure 2-21.

1. An 8 foot minimum horizontal and 10 foot minimum vertical clearance is required from the gas service riser to combustion air-intake vents and forced air-intake vents.
2. For a large meter set or multimeter manifold, this clearance requirement will extend 8 feet beyond the farthest PG&E meter equipment.

E. Multimeter Manifolds

Specific requirements in this subsection apply to particular types of premises (e.g., multifamily, apartment, and commercial buildings) where multiple meters are installed at a single location using the manifold configuration. These manifold connection requirements are additions to the meter-set requirements for single gas meter sets.

PG&E limits gas meter manifold configurations to one-tier or two-tier meter manifolds not exceeding 60 inches high. These manifolds are measured from the final, level, standing surface to the top of the manifold.

NOTE: Applicants must provide their PG&E project coordinator with a written justification for approval when requesting a three-tiered manifold or a manifold greater than 60 inches high.

PG&E will assess the applicant's site and conditions for gas service lateral and metering installations before approving an installation site.

Refer to Gas Design Standard J-15, located in Appendix C, for additional information.

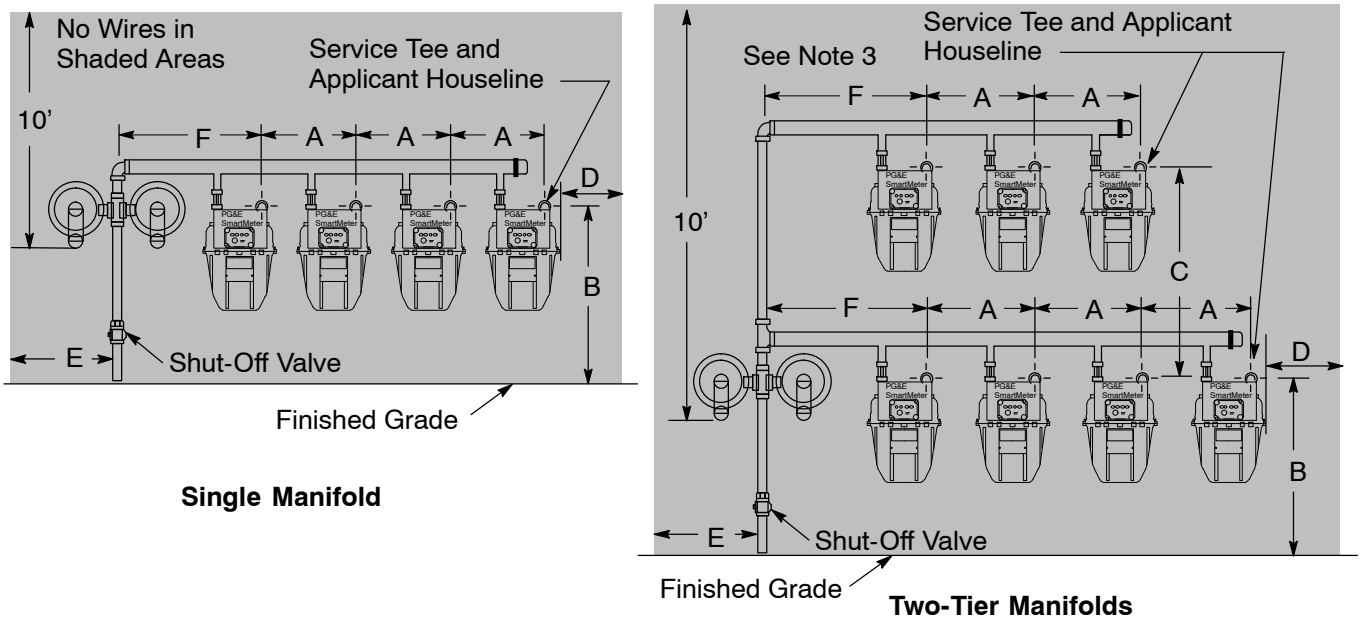

Figure 2-22
Dimensions for Typical, Residential, Multimeter Installations

Table 2-2 Dimensions to Figure 2-22

Dimension	Installation	Comments
A	12” for residential only 15” for cabinet installations only 20” for all commercial up to 1,000 class meters	PG&E provides custom-design dimensions for mixed meter sizes and for larger than 1,000 class meters.
B	26” (typ.) for unenclosed 32” (typ.) for cabinet installations	–
C	24” residential (unenclosed and cabinet) 36” commercial	Contact your local project coordinator for two-tier commercial manifolds.
D	6” min. to inside building corner 12” min. to outside building corner 36” minimum to electrical wires (see Note 3)	From farthest edge of PG&E equipment.
E	30” minimum to inside or outside corner of building 36” minimum to electrical wires (see Note 3)	PG&E may approve Dimension E to be reduced on a case-by-case basis. For example, in non-pedestrian traffic areas and on select PG&E equipment.
F	24” (typ.) for residential 36” (typ.) for 400 to 1,000 class meter, commercial	PG&E provides custom-design dimensions for mixed meter sizes and for larger than 1,000 class meters.

Notes in reference to Figure 2-22

1. The applicant’s houselines must be stubbed out 4 inches to 6 inches from the finished wall at the locations shown.
2. The applicant must clearly mark each houseline. See Subsection 2.4.2.G.9., “Meter-Set Requirements for Marking Houselines,” on Page 2-40.
3. Applicants must **not** install any electrical devices or equipment, including wires, cables, metering enclosures, telecommunication enclosures, **bond wires, clamps, or ground rods** within 36 inches horizontally from the farthest edge of PG&E facilities and 10 feet above the regulator vent.
4. Applicants may need to install the riser farther away from the building to accommodate the manifold installation. Consult your local project coordinator for site-specific details.

F. Gas Meter Cabinet and Gas Meter Room Requirements

1. General Requirements for Meter Cabinets

Gas cabinets are not preferred and require PG&E's approval in advance of construction as described in Gas Design Standard J-15, located in Appendix C. Applicants must furnish and install gas meters in cabinets. They must ensure that all related vent openings, louvers, and/or viewing windows are installed correctly. These devices are required in cabinets to prevent gas from migrating into the building. Also, applicants must ensure that the cabinets are readily accessible to PG&E at all times. Refer to Gas Design Standard K-51, "Single Meter Cabinet for Domestic Gas Meters," located in Appendix C, for more information.

Typically, the gas meter size represented in Figure 2-14, "Typical Residential Gas Meter Connection," located on Page 2-26, can be installed in a cabinet. Occasionally, PG&E will allow an applicant to install a gas meter the size of the one illustrated in Figure 2-15, "Typical Gas Meter Connection for 400 to 1,000 Class Meter," located on Page 2-27, in a cabinet; however, this exception requires prior approval from PG&E, in advance construction. Based on working space requirements, the meters may require installation in a meter room.

2. Specific Requirements for a Single Gas Meter Cabinet

PG&E will determine the minimum cabinet size allowed for an applicant's specific type of meter and provide the applicant with those dimensions. PG&E bases cabinet requirements not only on the size of the meter currently required, but also on the location and accessibility of the meter. See Gas Design Standard K-51, located in Appendix C, when determining the specifications for single gas meter cabinets.

3. Specifications for a Recessed, Individual Meter Cabinet

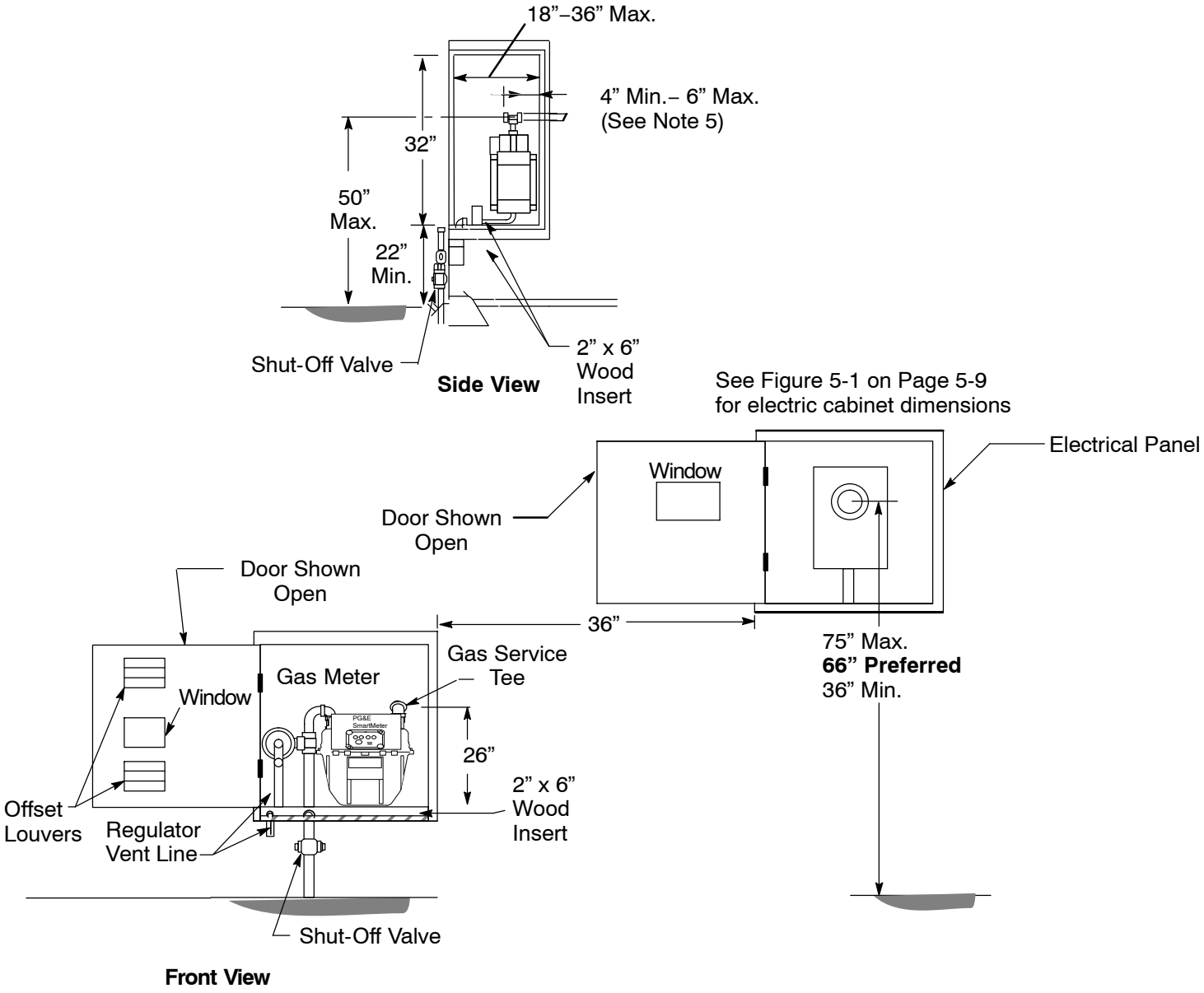

Figure 2-23
Recessed, Individual Meter Cabinet for Gas and Electric Meter Installations

Notes in reference to Figure 2-23.

1. Meter cabinets are not a preferred method of installation. Meter cabinet installations require approval from the local Field Services Manager before construction begins. When approved, they must comply with the requirements in this section.
2. Regulators should be installed on the outside of the cabinet. Additional space is required for larger regulators and dual-head regulators. The local Field Services Manager may approve the regulators to be installed in a cabinet. Regulators installed in a cabinet require the vents to be piped out as described in Gas Design Standard H-93, “Regulator Vent Lines–Above Ground.”
3. The cabinets shown are for typical meter installations. PG&E determines the minimum size of the required enclosure when the meter’s location is established.

4. See Subsection 2.5.1., “Service Delivery Point For the Gas Supply,” on Page 2-43. The houseline at the service delivery point also must be reinforced so that it can provide support for the meter set piping. The pipe must be rigid, a minimum of 3/4 inches, and have tapered pipe threads.
5. The houseline must extend a minimum of 4 inches and a maximum of 6 inches into the gas meter cabinet measured from the finished wall. The houseline must be 32 inches above the bottom of the meter cabinet.
6. Applicants must provide fully louvered, non-metallic doors . Each door must open at least 90°. This supersedes the requirements of Gas Design Standard K-51.
7. Applicants must install the gas service riser **before** any concrete or paving work occurs. After the gas service riser is installed, the applicant must ensure that there is a sleeve in the concrete or paving at least 3 inches in diameter, unless otherwise specified, for the gas service riser.
8. The gas meter cabinet must have a gas-tight seal and be vapor proof from the building. Construction material and sealing requirements for the cabinet are described in Gas Design Standard K-51, located in Appendix C, and also apply to Figure 2-23.
9. Applicants must ensure that gas meters installed in cabinets comply with the requirements of the inspection authority having jurisdiction.
10. Do **not** place electric meter panels, equipment or devices, conduit or wiring, enclosures, or connections within 36 inches of the gas riser. Including for services such as cable television or telecommunications.
11. Refer to the requirements in *Greenbook* Section 5, Section 6, and Section 7 for wall-mounted electric meter panels and cabinets.

4. Specific Requirements for a Multiple Gas Meter Cabinet

Requirements for multiple, residential, gas meter cabinets are essentially the same as those for single gas meter cabinets, as outlined in Subsection 2.4.2.F.2., “Specific Requirements for a Single Gas Meter Cabinet,” on Page 2-35.

Figure 2-24, “Cabinet Dimensions for Multiple, Residential Gas Meters,” shows the dimensions and details for a multiple gas meter cabinet.

Note:
All numbers represent inside dimensions.

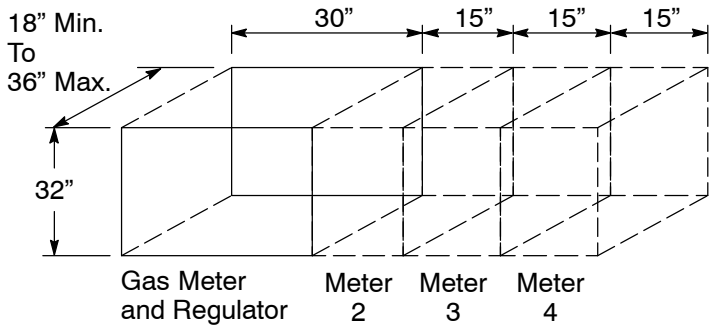

Figure 2-24
Cabinet Dimensions for Multiple, Residential Gas Meters

5. Gas-Meter Closets

Gas meter closets will be furnished and installed by the applicant and have a depth of 18 inches minimum and 36 inches maximum without exception. Doors must be non-metallic and fully louvered.

Doors must open at least 90° and have a clear opening height of 6 feet, 8 inches tall.

The inside of the closet must be made of non-flammable material and have a minimum 1-hour fire rating. All joints and penetrations must be sealed to prevent gas from migrating into the structure.

Foreign pipes are not allowed inside the closet with the exception of fire sprinkler heads. Lighting, wiring, conduits, junction boxes, or inspection panels of any kind are not allowed inside the closet. Bonding or grounding wires on the customer's houselines are not allowed inside the closet.

The coiling must have a 1:12 slope. The ceiling must slope up toward the door frame with a maximum of 6 inches measured from the door opening to the finished ceiling. The inside width of the closet cannot exceed 8 inches beyond either side of the door frame. Refer to Figure 2-22 on Page 2-34 for manifold spacing to determine the size of closet required for the desired number of meters. The meters and manifold must fit within the opening of the closet doors with the exception of the tie-in piece from the outside riser. The riser and regulator will be installed outside of the closet.

The applicant provides a penetration through the wall into the closet. Contact your local project coordinator for the exact size and location of the required penetration.

The doors must have sign identifying "Gas Meters." If the doors have locks, the applicant must install a lock box near the closet that is acceptable to PG&E and contains a key.

The closet cannot be used for storage of any kind. Only PG&E gas meters and metering appurtenances are allowed inside the closet.

6. Specific Requirements for Gas Meter Rooms

Refer to Gas Standard J-16, located in Appendix C, for specific requirements about gas meter rooms.

7. Gas Meter Set Enclosures

a. **Typical Enclosure Details**

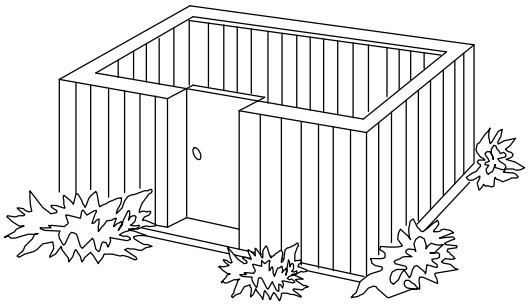

Figure 2-25
Typical Detached Enclosure

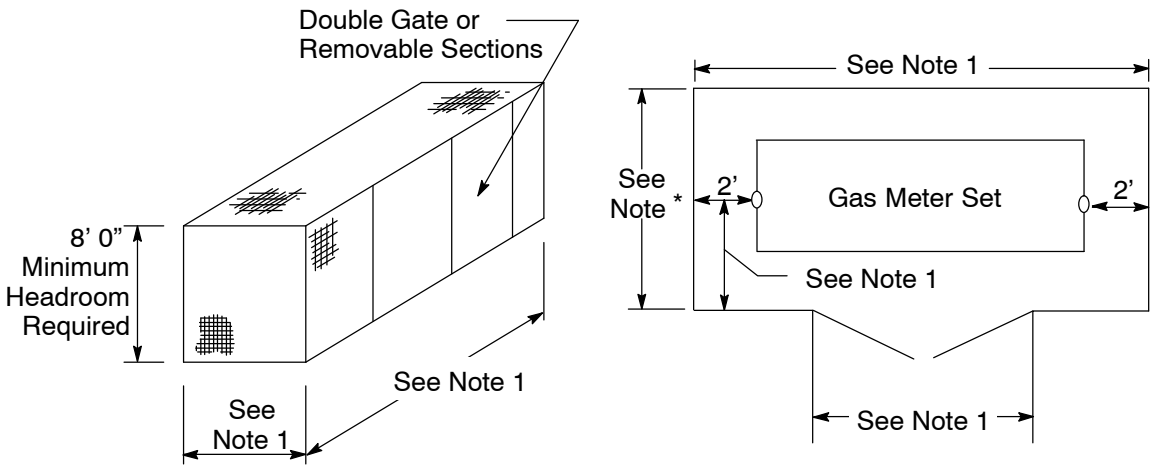

Figure 2-26
Typical Enclosure Dimensions

Notes in reference to Figure 2-25 and Figure 2-26.

1. The enclosure's length will vary depending on the meter set. Contact your local PG&E project coordinators for more information.
2. PG&E determines if the enclosure requires a wire mesh cover. If a mesh cover is required, it must have a minimum 50% open area.
3. Approved enclosure materials include, but are not limited to, concrete block, wood, perforated or expanded metal, or metal chain-link fencing.
4. For enclosures with a cover and alcoves with a gate, the material used must have a minimum 50% open area. For example, perforated metal sheets have specific percentages of open area.
5. All distances provided in Figure 2-26 are minimums. After PG&E confirms the meter size, final dimensions will be provided.
6. Trucks must be able to access large meter installations. Please contact your local PG&E project coordinator before designing locations for gas meters.
7. Additional meter protection may be required. Protection posts can be incorporated into an enclosure design.

b. Special Requirements for Gas Meters Serving Schools or Other Buildings Where Children Congregate

The following requirements apply to schools or other buildings where children congregate.

- Locate the gas meter enclosure adjacent to the property line or away from buildings in a wire cage enclosure or other suitable protective enclosure.
- PG&E requires an overhead wire cover to prevent any debris or other material from falling inside the enclosure.
- The applicant must ensure that PG&E is able to secure the enclosure with a PG&E lock.
- It is the applicant's responsibility to provide the enclosure and concrete pad for the gas meter set. PG&E must approve the final design and size of the enclosure.

8. Meter Protection Requirements

Applicants must protect meter sets in locations that are subject to damage from vehicular traffic. PG&E determines when such protection is required. Refer to Gas Design Standard J-95, located in Appendix C.

Applicants must protect all gas meter sets located in the following areas.

a. Within 3 feet of:
   - Single-family, residential driveways or parking areas (including garage areas)
   - Commercial refuse container locations
   - Thoroughfares
   - Paved areas with curbs

b. Within 8 feet of:
   - Multifamily, commercial, or industrial driveways or parking areas (see the "Exception" below)
   - Loading docks
   - Freight-handling areas
   - Thoroughfares
   - Paved areas without curbs

   EXCEPTION: Physical protection is **not** required for meter sets located within 8 feet of multifamily, commercial, or industrial driveways or parking areas if the meter set is located 3 feet behind a barrier that is adjacent to the area and if PG&E finds the barrier to be acceptable.

c. Within an area that has, in PG&E's judgement, an unusually high risk of vehicular damage, the applicant must install a system of barrier posts that meet PG&E's specifications. Consult your local project coordinator for specific requirements.

9. Meter-Set Requirements For Marking Houselines

Applicants must ensure that the following rules for marking houselines are followed.

a. PG&E requires that lines are marked by attaching an embossed, durable**,** metal or plastic tag to each houseline. PG&E must approve of the tag.

b. Markings **must** be legible and specific.

c. Marking information must include an authorized apartment or street number and a use or location designation.

d. The houseline must be permanently, clearly, and prominently marked **at the point of the service connection** (i.e., service delivery point).

NOTE: PG&E will **not** install meters unless the permanent address, the location, or, when applicable, the area being served is marked at each meter location.

e. When gas meters are installed in interior locations or rooms, the words "Gas Meters" must be placed on the room or location access doors to allow PG&E employees to find the meters easily.

10. Meter Sets Requiring Telephone Service

Applicants with an estimated average use of 10,000 therms per month or more are required to install, own, and maintain a nominal, 1-inch diameter conduit and a telephone cable. This requirement also may apply to applicants with select rate schedules, Automated Meter Reading (AMR), and noncore accounts. PG&E's requirements for the conduit are described below.

a. Applicants must extend the conduit and telephone cable from the closest telephone service location to a location specified by PG&E at or near the gas metering facilities. Applicants must install an approved ground rod at a PG&E-specified location.

b. Applicants are responsible for all charges and costs associated with installing the telephone facilities necessary to provide telephone service for PG&E's gas metering purposes.

c. PG&E is responsible for establishing telephone service and for the ongoing telephone service charges for gas metering purposes.

d. When in a meter room, install the conduit and associated equipment as shown in Gas Design Standard J-16, Figure 1, "Gas Meter Room Electric Enclosure and Conduit Arrangement," located in Appendix C.

11. Gas Pulse Metering

Refer to Gas Standard J-65.1, "Volume Pulse Output Connection for Gas Meters," located in Appendix C, for specific requirements about gas pulse metering.

12. Additional Meter-Set Requirements–SmartMeter™ Module Location Requirements

PG&E's SmartMeter™ Advanced Meter Reading system uses radio frequency (RF) technology to transmit gas meter reads automatically. This allows PG&E's customers to monitor their daily energy use.

SmartMeter™ customers have additional location requirements specific to the meters necessary for PG&E to operate its SmartMeter™ Advanced Meter Reading system. Applicants must be aware of the following requirements to ensure that the SmartMeter™ Advanced Meter Reading system can operate properly.

a. **Do not** locate the meters in any room, cabinet, enclosure, or configuration that blocks or interferes with the radio frequency signal transmissions. An example of such a prohibited enclosure is a metallic cabinet.

b. **Do not** locate the meters in close proximity to (i.e., 6 inches or less) any metallic object that could block or interfere with the radio frequency signal transmission.

c. **Do not** install gas meters within 5 feet of building walls and ceilings if they are made from a significant amount of metal or metal reinforcements.

d. Most SmartMeter™ gas modules are installed directly on a gas meter. If a gas meter is installed in a cabinet, meter room, below grade, or other location where communication problems may exist, PG&E may install a module in a remote location away from the gas meter to ensure proper radio frequency transmissions. The equipment may be installed on nearby gas piping, a building wall/ceiling, or an outside location. The equipment may need to be attached to the structure or wall to route the wiring.

2.5. Applicant-Owned and Installed Gas Service Piping (e.g., Houseline), Valves, and Automatic Shut-Off Devices

The applicant is responsible for maintaining the applicant-installed and owned gas service piping, valves, automatic shut-off devices (e.g., earthquake valves), or other piping components on any premises or in any building. These applicant-owned components must be installed downstream of (i.e., after) the gas supply service delivery point.

Applicants must ensure that after their equipment is installed, the equipment does **not** obstruct the operation or serviceability of PG&E's piping, metering, and pressure-regulating equipment.

The houseline at the service delivery point typically is located after the PG&E service tee for residential services. Reinforce the houseline so that it provides support for the meter-set piping. The pipe must be rigid, must be a minimum of 3/4 inches, and must have tapered pipe threads.

2.5.1. Service Delivery Point For the Gas Supply

The service delivery point for the gas supply is the point where PG&E's facilities connect to the applicant's house pipe (i.e., houseline). Figure 2-1 on Page 2-6 illustrates a typical service delivery point.

For **residential** and **small commercial** meter sets, the service delivery point is the point where the male threads of the applicant's houseline connect to the female threads of PG&E's gas service tee fitting.

Some **commercial** installations and **industrial** installations do **not** have service tees installed. For these installations, the gas supply service delivery point is located after the gas meter, gas pressure regulator, or regulation equipment. Specifically, it is the point where the gas service bypass reconnects with the gas service outlet piping.

Typically, the gas supply service delivery point is either the first weld or fitting after the PG&E-installed bypass valve downstream of (i.e., after) the gas meter. See Subsection A in Figure 2-16 through Figure 2-18 on Page 2-28 through Page 2-30.

PG&E does **not** allow applicants to access the pipe fitting's plug. Only PG&E employees are authorized to access the plug when they perform service and maintenance.

Applicants must **not** connect or install non-PG&E components to any portion of the PG&E gas meter set upstream of (i.e., before) the service delivery point.

Applicants must provide a securely supported gas houseline connection to PG&E piping either by bracing or by reinforcing the houselines that extend from finished walls. Do **not** connect flexible houseline directly to PG&E piping. (Exceptions include subsidence areas, mobile home parks, and manufactured homes as described in Gas Design Standard J-12.4 and Gas Design Standard J-58.)

When applicants require a gas supply for multiple gas meter installations that are supplied by a manifold, PG&E will install gas service tees downstream of (i.e., after) each gas meter. PG&E will install these service tees to each location where the utility gas service pipe connects to the applicant's houseline at the service tee.

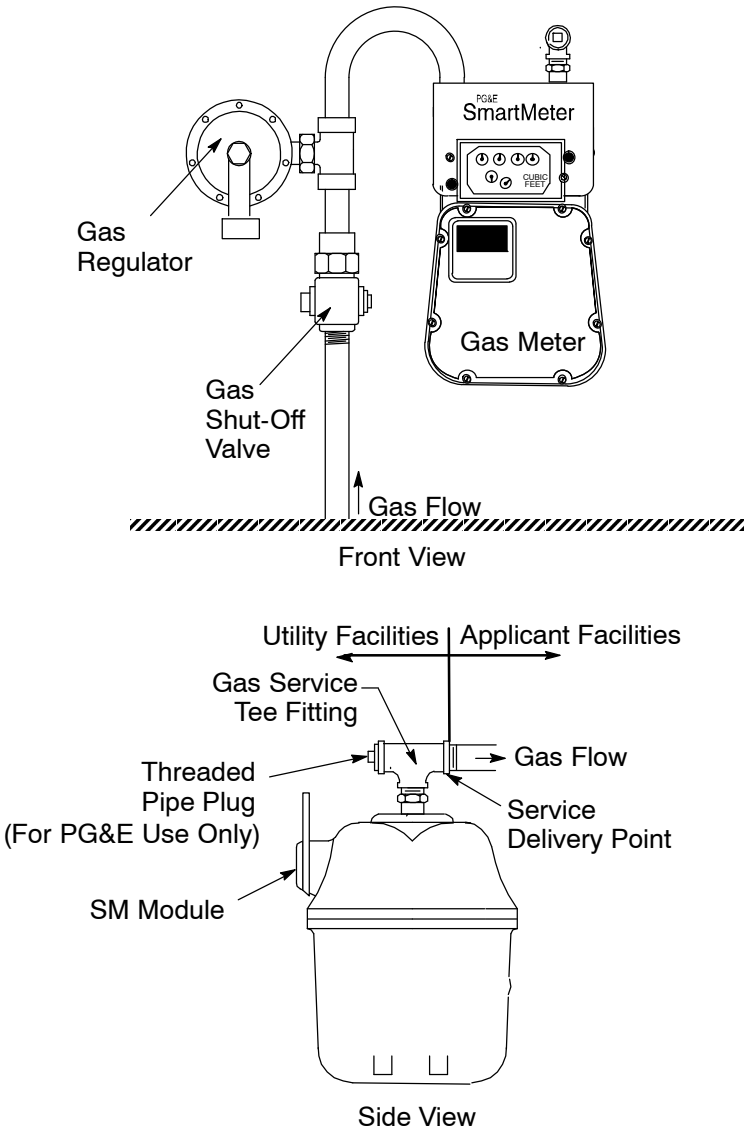

Figure 2-27
Typical Residential, Multimeter Installations

2.5.2. Applicant-Owned Riser and Pipe

PG&E recommends that applicants use the gas-riser configuration shown in Figure 2-28, “Recommended, Applicant-Owned Riser and Pipe,” found on Page 2-45, when they install above-ground gas pipe that transitions to underground gas pipe. The preferred riser for most applications is a noncorroding, prefabricated riser.

Also, PG&E recommends that applicants contact the local authority having jurisdiction before installing ferrous gas pipe and ask for the requirements to protect the underground pipe from corrosion.

A. Applicants are encouraged to have all buried gas pipe inspected yearly. Applicants should contact locally licensed plumbing contractors if they need assistance in locating, inspecting, or repairing their buried gas service pipe or other piping equipment.

B. Applicants must ensure that all required cathodic protection is in place and documented as illustrated in Figure 2-28 below.

C. Applicants must ensure that their facilities are designed and installed to the requirements of the governmental authorities having jurisdiction. PG&E recommends using the *Uniform Plumbing Code*, which requires the following protective measures.

1. Apply a coating and cathodic protection to steel pipelines.
2. Repair any coating that is damaged during installation.
3. Install copper tracer wire with nonmetallic gas pipe.
4. Provide a minimum cover of 18 inches for plastic yard pipe used to carry gas.

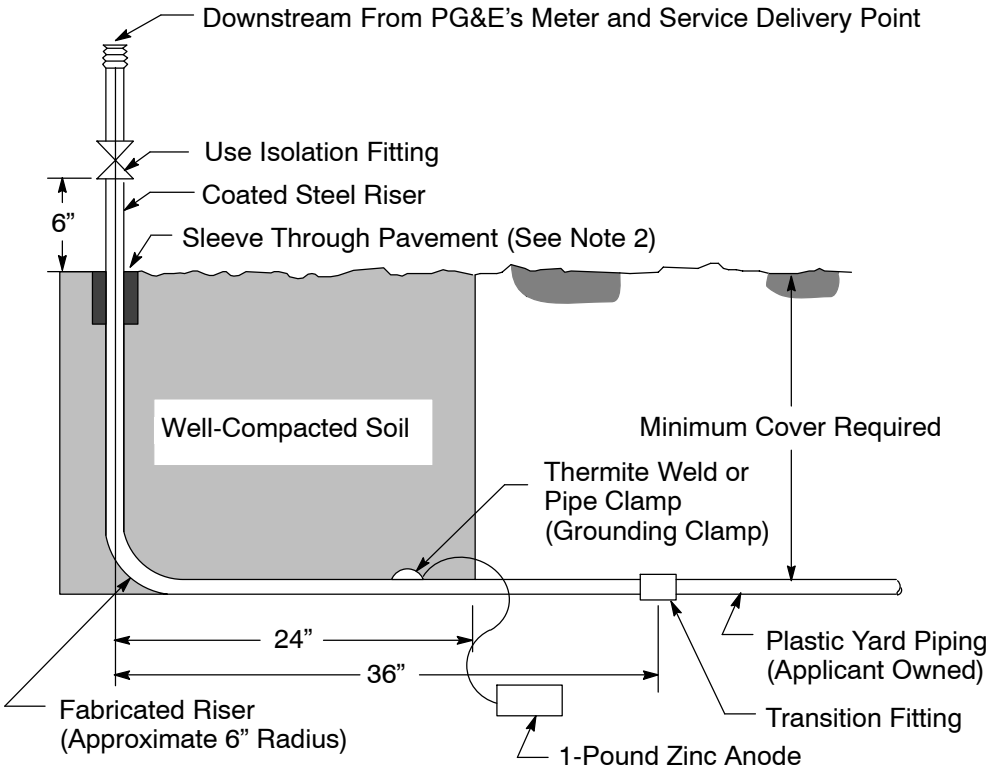

Figure 2-28
Recommended, Applicant-Owned Riser and Pipe

Notes in reference to Figure 2-28.

1. Always maintain a minimum distance of 36 inches between the vertical centerline of the riser and the transition fitting.
2. If the area around the gas riser is going to be paved, install a minimum 3-inch sleeve around the riser.
3. Comply with city regulations when installing a plastic-to-steel riser (as shown) or a noncorroding, prefabricated riser on the applicant's houseline.

2.5.3. Electrically Bonding and Grounding Gas Pipe

A. Do **not** install electrical devices or equipment, wires, cables, bonding or grounding wires, clamps, or ground rods around the gas meter set as shown in Figure 2-19 on Page 2-31 and Figure 2-22 on Page 2-34.

B. Do **not** use PG&E's gas service piping, gas risers, or meter facilities for electric bonding or grounding that allows the gas meter, piping, or other gas facilities to become current-carrying conductors.

C. Do **not** allow gas pipe to be electrically bonded within meter enclosures, cabinets, or meter rooms.

2.5.4. Applicant-Owned Protective Equipment

PG&E's gas metering equipment can be affected adversely when an applicant's equipment causes:

- Pulsations in the gas flow
- Sudden changes in flow rate
- A backflow condition

Applicants must install, at their expense, any equipment necessary to mitigate or eliminate these detrimental effects. PG&E must review and approve these installations before initiating gas service.

Applicants must add any necessary protective equipment when their operations change and those changes could create any of the three adverse conditions described in the previous bulleted list.

PG&E may terminate service and refuse to restore that service to any applicant who continues to operate without the proper protective equipment after receiving notification from PG&E.

Applicants are responsible for damages made to PG&E equipment because they did not install the proper protective equipment.

Section 3
Electric Service: Underground

SECTION 3 ELECTRIC SERVICE: UNDERGROUND

Section 3
Electric Service: Underground

3.1. Scope

This section of the manual provides information to help applicants, as well as their engineers and contractors, select acceptable locations and types of terminations for underground services when connecting to Pacific Gas and Electric Company's (PG&E's/Company's) overhead or underground electric distribution system.

NOTE: For technical information on primary services, refer to PG&E Bulletin TD-2999B-030, "Technical Requirements for Electric Service Interconnection at Primary Distribution Voltages," in Appendix B, "Electric and Gas Service Documents." For temporary or permanent service to a post or pedestal, refer to the applicable documents in Appendix C, "Electric and Gas Engineering Documents."

3.2. General Information

PG&E has the right to access Company facilities located on an applicant's premises at any time, for any purpose connected with furnishing gas and/or electric service. Applicants must **not** access PG&E facilities or enclosures. Only qualified PG&E employees will connect service lateral conductors to (or disconnect them from) PG&E's energized distribution system. This includes installing or removing metering facilities or any other work related to PG&E's facilities or systems.

3.2.1. Safety Reminder

WARNING

To avoid potential accidents, do *not* begin to excavate before identifying underground facilities.

CAUTION

Flame resistant (FR) clothing is required while working on, working near, or observing others working on any PG&E facility.

USA

State law requires applicants to contact Underground Service Alert (USA) **by dialing 811 at least 2 working days before excavation** (weekends and holidays excluded). Ensure that you call USA when planning underground work, before digging begins, to allow adequate time for USA to determine the location of underground gas and electric lines or equipment. ***The potential for an accident exists* if applicants fail to request USA to identify underground utility facilities before they begin excavating.**

Dig Safely

First, the applicant must mark the excavation area with white paint. Then, USA will arrange for participating companies to mark the locations of their underground facilities at the jobsite. **This is a free service.** See the USA color-code identifiers on Page 1-1 and on the back of this manual.

Additional information is available at www.pge.com/digsafely and about USA services at the USA North website http://www.usanorth.org. USA is a locating service for excavation only. Do not use USA for design purposes.

3.2.2. Establishing Underground Electric Service Responsibilities

Applicants are responsible for constructing, maintaining, and protecting specific portions of underground electric services during construction of their project. The following subsections describe those responsibilities and explain PG&E's responsibilities during the construction process.

A. Applicants are responsible for obtaining all required **permits**. This includes local building permits, environmental permits, encroachment permits, and any other permits that may be required based on the specific location of the trenching/excavation activities.

B. Applicants must ensure that the following construction activities, which may be required to establish underground service, are performed according to PG&E's standards and specifications, PG&E-approved construction drawings and inspection requirements, and any other permit-specified requirements. This includes construction activities conducted on private property, in the franchise area, or in other right-of-way areas. Construction activities include:

- Trenching
- Excavation
- Backfill
- Compaction
- Conduit
- Substructures (boxes and pads)
- Paving (cut, patch, and final repair)

C. Applicants must provide satisfactory termination facilities on or within the structures being served. (In this manual, see Sections 5, 6, 7, 8, 9, 10, and 11, as applicable, based on your project type, amperage, and voltage.) The locations for all transformers and meters, as well as the sizes, types, and quantities of conduit, are subject to PG&E's specifications and approval.

D. Applicants are responsible for owning and maintaining conduit and substructures on private property; however, they must convey ownership of any portion in a public (i.e., franchise) area or right-of-way, if applicable, to PG&E.

E. Applicants are responsible for providing, installing, and maintaining any structures that are required to protect service facilities from damage.

F. **PG&E is responsible for and required to perform any and all tie-in work to existing distribution and/or energized facilities.**

G. PG&E is responsible for furnishing, installing, owning, and maintaining the following service facilities, as applicable. For additional details and options for performing this work, refer to *Electric Rule 15* , "Distribution Line Extensions," and *Electric Rule 16*, "Service Extensions," found online at http://www.pge.com/tariffs/ER.SHTML#ER.

- Cable/conductors to supply power
- Transformer
- Meter(s) and metering transformers, if required
- Other equipment (e.g., switches)
- Riser materials (to connect underground service to overhead facilities)

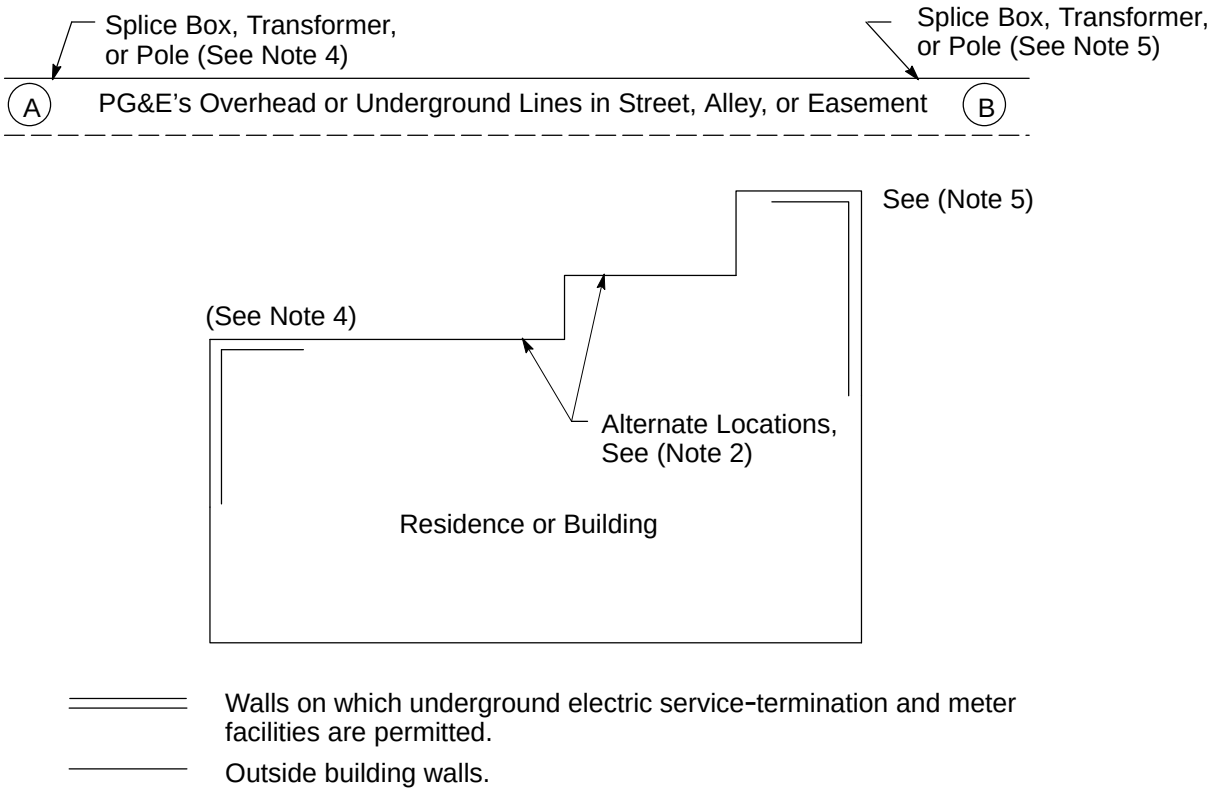

Figure 3-1
Locations of Underground Electric Service-Termination and Meter Facilities

Notes in reference to Figure 3-1.

1. If practical, attach the underground electric service-termination facility and the meter to the wall at a preferred location. Locate the facilities as close to PG&E's service facilities as possible to avoid future operation and maintenance restrictions.
2. **PG&E must approve all service locations *before* they are constructed.**
3. Applicants must locate the service so that the meter can be read and serviced **without** entering a fenced or enclosed location, when possible.
4. Permitted locations for electric service-termination and meter facilities are from Point A.
5. Permitted locations for electric service-termination and meter facilities are from Point B.

3.2.3. Installing Ground Rods

Applicants or their contractors are required to install ground rods when PG&E specifically requires them as part of a substructure installation (e.g., when constructing a transformer pad). Find PG&E-approved ground rods and clamps in Numbered Document 013109, “Corrosion Resistant Ground Rods and Ground Rod Clamps,” included in Appendix C.

3.2.4. Installing Equipment Pads

Applicants or their contractors must construct and install equipment pads, as required, for electric equipment that is providing underground electric service. When constructing a concrete pad for a transformer, use Numbered Document 045292, “Concrete Pad for Three-Phase, Loop-Style, Pad-Mounted Transformers.” If installing a box pad for a transformer, use Numbered Document 064309, “Box-Pad for Pad-Mounted Transformers.” Both engineering documents are listed Appendix C.

For projects that require equipment pads other than for transformers (e.g., PMH switches), these drawings are provided by your project coordinator or PG&E inspector at the pre-construction meeting if the installation is included in the PG&E-approved design.

Install customer-owned switchboard pads according to their applications. Refer to the ground rod and conduit requirements for primary switchboards in Section 11, “Electric Switchboards: 601 Volts Through 25,000 Volts and Primary Services,” Subsection 11.3.S., on Page 11-3, and Figure 11-1, “Primary Switchboard Termination Section Pad Detail,” on Page 11-4.

For additional references to the underground electric documents provided in Appendix C, see Table 3-2, “Electric Underground Documents,” on Page 3-14.

3.2.5. Installing Overhead and Underground Service for Two or More Buildings on One Lot

If more than two dwellings or buildings are located on the same lot, applicants must consult their local PG&E project coordinators to determine the acceptable service-termination locations and meter locations **before** wiring the buildings.

NOTE: See Table FM-1, “Service Planning Office Contact Information,” at the front of this manual starting on Page iv, for specific contact numbers listed by area.

Typically, PG&E only installs one service lateral to a single building on one premise, or to a single enterprise (with either one or multiple buildings) on one premise. However, PG&E may provide more than one service lateral under the following circumstances.

A. Where it is allowed or required by PG&E’s tariff schedules.

B. For PG&E’s convenience.

C. Where it is required by ordinance.

D. When it is installed as special facilities.

3.2.6. Inspecting and Approving Overhead and Underground Services

An applicant must contact the local PG&E project coordinator to arrange for a field representative to inspect and approve the applicant-furnished and installed service equipment, as well as any other mandatory components required for an underground service installation.

3.3. Underground Service Installation Requirements

3.3.1. Installing Services From Underground Distribution Systems

PG&E serves applicants from an underground service if the site or lot is located in an area that is supplied from an **existing** underground distribution system. PG&E owns, maintains, and installs the underground service lateral conductors. PG&E provides underground-to-underground service **along the shortest, most practical, and most available route** to the applicant's service-termination facility.

Typically, the termination facility is on or within the building or structure, as shown in Figure 3-2, "Underground-to-Underground Service Connection," below. PG&E will install the conductors in conduit.

Substructures include conduit, boxes, and transformer pads. Applicants must follow PG&E's guidelines and specifications, including those specified in *Electric Rule 16*.

PG&E installs the transformer, if required, and connects the service lateral conductors to the applicant's termination facilities.

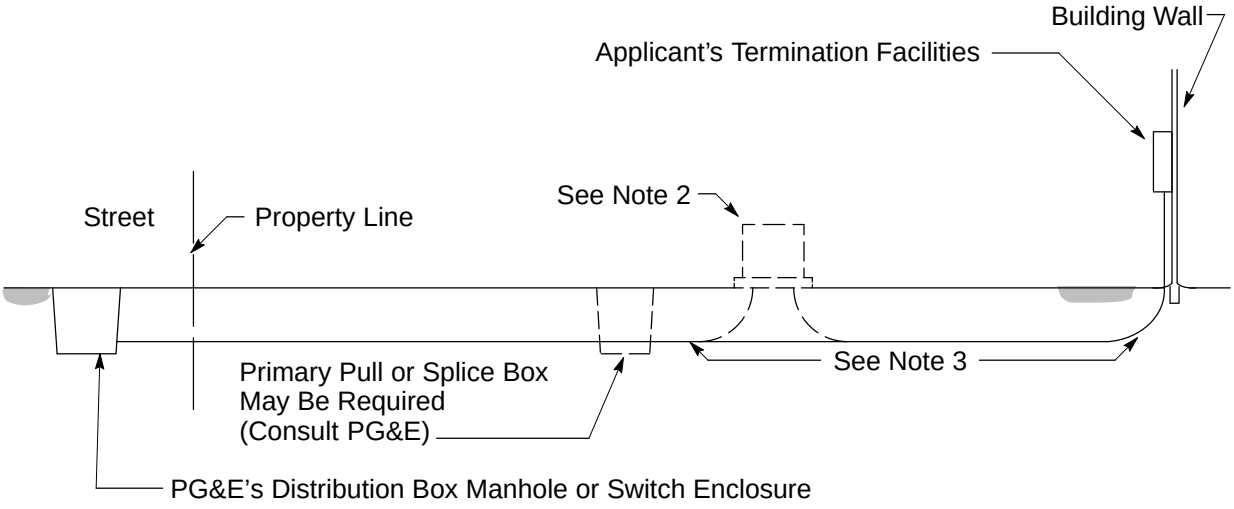

Figure 3-2
Underground-to-Underground Service Connection

Notes in reference to Figure 3-2.

1. When the service delivery voltage is the same as the available, primary distribution voltage (i.e., over 2,000 volts), typically the applicant provides a primary splice box according to PG&E's requirements.
2. PG&E supplies a transformer, if required. (The applicant must provide the trench, backfill, and required conduit, pad, and substructures.)
3. PG&E-owned primary and/or secondary conductors. (The applicant must furnish the substructures.)

3.3.2. Installing Services From Overhead Distribution Systems

PG&E will provide service from an underground riser that is installed on an **existing** pole, as shown in Figure 3-3, "Overhead-to-Underground Service Connection," below, if **any** of the following requirements are met.

A. The applicant is located in an area served from an overhead system and the applicant prefers to have the service installed underground.

B. The applicant's load requires a transformer that is 75 kilovolt amperes (kVA) or larger.

C. A local city or county ordinance requires underground service.

In these cases, in addition to the requirements described in Subsection 3.3.1., "Installing Services From Underground Distribution Systems," on Page 3-5, the applicant must pay the material costs of both the pole riser facility and any conduit that is required in the public right-of-way.

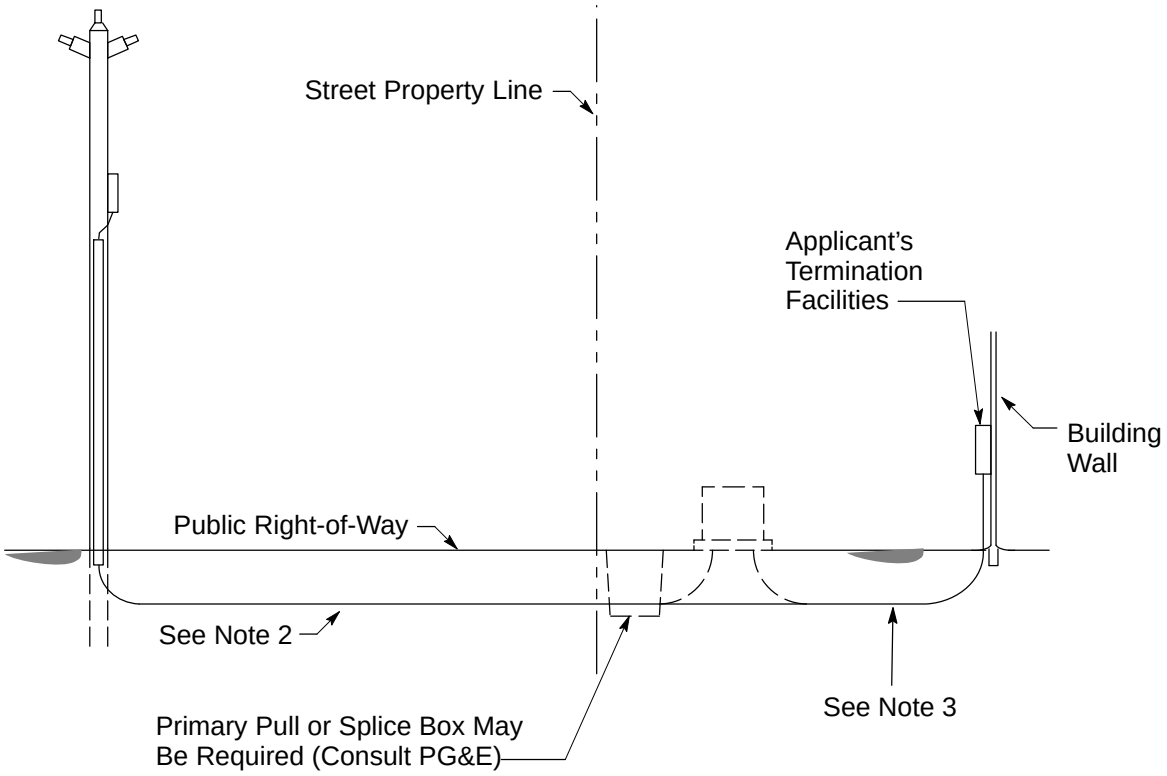

Figure 3-3
Overhead-to-Underground Service Connection

Notes in reference to Figure 3-3.

1. When the service delivery voltage is the same as the available, primary distribution voltage (i.e., over 2,000 volts), typically the applicant will provide a primary splice box according to PG&E's requirements.
2. PG&E's pole and secondary riser. (The applicant must pay the installed cost of the pole riser and conduit within the right-of-way.)
3. PG&E-owned service lateral conductors. (The applicant must furnish the conduit, as required.)

3.3.3. Installing Conduit for Underground Service

NOTE: PG&E will **not** install its supply cables in conduits that run beneath any building or structure when those conduits **do not terminate** on or within that building or structure, but are intended to supply **another** building or structure on the same or another premise.

PG&E requires applicants to install a conduit system for underground service laterals. It is the applicant's responsibility to provide service conduit as described in the following PG&E documents. Refer to the following numbered documents, located in Appendix C.

- Numbered Document 063928, "Methods and Requirements for Installing Commercial Underground Electric Services 0−600 Volts to Customer-Owned Facilities"
- Numbered Document 063927, "Methods and Requirements for Installing Residential Underground Electric Services 0−600 Volts to Customer-Owned Facilities"
- Numbered Document 062288, "Underground Conduits"
- Numbered Document 038193, "Minimum Requirements for the Design and Installation of Conduit and Insulated Cable"

NOTE: It is recommended that applicants consider installing conduit one size larger than the required minimum in case larger cable is required or needed for future upgrades. Refer to Subsection 1.14., "Determining the Service Rating," on Page 1-11, for information on how PG&E determines the ampacity (i.e., capacity) rating of customer equipment.

Also, applicants must ensure that conduit runs have a polyester pull-tape (Code 560154) to initiate the cable pulling. The pull-tape must be attached securely either to conduit plugs or caps.

Applicants must prove that the entire conduit system is free of dirt, rocks, or other obstructions that could prevent, hinder, or harm the installation of the electric conductors. Applicants must use a PG&E-approved mandrel to prove the conduit system. See Subsection 3.4.1., "Mandrels," on Page 3-15, for details. A PG&E inspector must approve the equipment and the method, and observe the work being performed to prove the service conduit system's readiness.

Applicants must furnish and install either conduit caps or plugs on the ends of all conduits. In addition, at locations where the cable insulation may be damaged (e.g., transformer pads or switchboard pull sections), applicants are required to install cable protection at all of the conduit ends. Applicants should contact their local PG&E project coordinator for specific requirements.

3.3.4. Installing PG&E-Only Service Trenches

Applicants must ensure that trenches containing only PG&E electric service facilities or PG&E electric and gas service facilities are covered, as required, when those trenches are located on:

- Private property
- Designated sidewalks
- Parkways
- Driveways

The electric service conduit and gas pipe must be covered on private property or in the franchise as described in the following text. The required minimum clearances must be maintained as listed in Table 3-1, "Minimum Separation and Clearance Requirements for Service Trenches," on Page 3-13.

A. Provide a 24-inch minimum cover for secondary (i.e., 0−750 volts) electric service conduit and gas pipe.

B. Provide a 36-inch minimum cover for primary (i.e., over 750 volts) electric service conduit.

The term "cover" refers to the standard distance between the outer surface of an underground facility and the final grade level. **The actual trench depth must be greater than the cover depth**.

All electric service and secondary conduit must enter PG&E splice boxes or enclosures from the bottom for new construction and not through the boxes' conduit knockouts. **If** the top of the conduit is not at or below the required minimum conduit depths, the applicant needs to increase the installed depth of the conduit at those locations. See notes in Numbered Document 28028, "Secondary Enclosures for Electric Underground," located in Appendix C.

PG&E may require the applicant to provide other means of protecting the service conduit in the following circumstances.

- Increased traffic loading
- Soil erosion
- Open ditches
- Where digging machinery or equipment may be used

This increased protection also may be required in areas where similar situations either are anticipated or exist already.

Applicants must ensure that the trench depth is sufficient to meet the minimum depth requirements when taking into consideration the following conditions.

A. The required depth of cover (as described previously).

B. The size of the conduit that is being installed (e.g., 3 inch, 4 inch).

C. The necessary bedding materials.

D. The size of the electric conduit bends (e.g., 24-inch or 36-inch bends).

Therefore, for service trenches (e.g., secondary voltage and 3-inch conduit) on private property or in the franchise, the required minimum depth of trenches below grade is 30 inches.

Applicants must receive pre-approval from the PG&E inspector when requesting an exception to the minimum-depth requirements. Applicants should contact their local PG&E project coordinator with questions about trench depth.

Applicants should be aware that wet utilities must always be separated from the electric and gas service trench, meters, and risers. For more information, see PG&E Standard S5453, "Joint Trench," Exhibit B, *Joint Trench Configurations & Occupancy Guide*, located in Appendix B.

Also, when applicants plan to install electric service facilities with other services, such as telephone or cable television, they must refer to:

- Subsection 3.3.8., "Installing Joint Utility Service Trenches," on Page 3-11.
- Figure 3-4, "Typical Joint Service Trench," on Page 3-12.
- Table 3-1, "Minimum Separation and Clearance Requirements for Service Trenches," on Page 3-13.

Applicants should contact their local PG&E project coordinator in the development stages of their projects for additional details and requirements about using joint trenches.

3.3.5. Installing Offsets

In situations where more than two 90° bends are needed, applicants should consult their local PG&E project coordinators to determine whether additional raceway pull-boxes will be required to avoid excessive pulling tension on the service cables.

A. PG&E does **not** approve short-radius conduit fittings, commonly known as LBs or service elbows, for use in underground service conduits that are intended to hold PG&E service conductors. Applicants must ensure that offsets are **not** installed in the following situations.

   1. Do not make an offset in the service lateral conduit entering the electric service panel or enclosure.
   2. Avoid making an offset in the conduit system because it may prohibit the use of a mandrel to prove the acceptability of the conduit system.
   3. Avoid making an offset in the service conduit because it will increase the pull tension required to install the service conductors.

B. In some situations, applicants may be required to perform both of the following numbered actions.

   1. Install larger conduits and/or additional splice boxes or pull boxes to accommodate the installation of the conductors.
   2. Transition to cables appropriately sized for the service capacity.

C. The following scenarios represent situations where B.1. and B.2., on Page 3-9, could be required.

1. Construction sites where PG&E determines that larger-than-standard cables or conductors are required to maintain voltage and flicker drop.
2. Construction sites where normal pulling tensions may be exceeded.

NOTE: Applicants must be aware that pin adaptors, cable ringing, or splicing on additional cable **will not be used** to terminate cables. PG&E **does not** accept these termination techniques.

3.3.6. Selecting Backfill

Applicants must use backfill (i.e., sand or native soil) to provide a smooth bedding area when installing utility facilities. The backfill must fill all of the voids around the facilities and provide at least 12 inches of cover for the conduit or pipe. PG&E considers soil that contains occasional, rounded rocks that are 1/2 inch in diameter or less to be acceptable backfill.

Crushed rock or sharp-edged materials of any kind, or backfill containing easily breakable dirt clods larger than 6 inches in diameter, are not acceptable.

Additionally, PG&E **prohibits** applicants to use backfill with rocks greater than 3 inches in any dimension within 6 inches of the top of the pipe or conduit or less than 12 inches below the pavement subgrade.

In sections where a shallow trench is needed and allowed, place a cement-slurry cap above the conduit. The cap must be a minimum of 3 inches thick and made from a cement-slurry mix. The mix must consist of two parts sand to one part cement, with red die mixed in. The cap must rest on rock-free sand and not the conduit. Position the cap at least 6 inches above the conduit. The top of the cap must be a minimum of 8 inches below grade level. The width of the cap must be the same width as the trench.

When backfilling trenches on slopes or grades, bags of concrete and red die may be required on top of the conduit to prevent the backfill from moving down the slope or running out of the trench.

Soil compaction must be 95% and meet PG&E's and any applicable Federal, State, County and local requirements. A copy of the test results may be required by PG&E.

All of these requirements are at the discretion of the PG&E inspector. See Exhibit B, *Joint Trench Configurations & Occupancy Guide*, located in Appendix B. This guide contains additional backfill and trenching requirements. For PG&E-approved import material, see Appendix B, for the Engineering Material Specification Number 4123, "Backfill Sand."

3.3.7. Providing Drainage From the Conduit System

In some conditions, water can enter into the wire and conduit system and migrate into the meter panel and/or building. The applicant or applicant's contractor must provide a means to discharge any excess water or water pressure from the conduit system.

The most common method required for discharging water from the conduit is installing a box outside near the base of the riser to the meter panel. Alternate locations may be required by the PG&E inspector or PG&E project coordinator. Any other methods of discharging water will require PG&E's approval **before** construction begins. For indoor electric meter rooms below grade or at grade level, additional methods of water drainage should be incorporated into the design of the meter room(s) to prevent the accumulation of water.

3.3.8. Installing Joint Utility Service Trenches

When installing electric services underground, the PG&E gas service pipe and the electric service lateral typically are installed in a common, joint trench. A joint trench also may include telephone and cable television facilities.

The following wet facilities are **not** permitted in a joint trench.

- Propane lines
- Sewer pipes
- Sanitary drains
- Storm drains
- Other wet-utility piping or facilities

There are additional requirements for separating a wet utility from a joint trench along with the electric and gas meters and service risers.

Applicants must submit a written request to PG&E when they want to include other facilities in a joint trench. The request must include a justification and be submitted to PG&E for review and approval **before** excavation or work begins.

PG&E must coordinate joint trench installations with telephone, cable television, or other facilities. This coordination requires lead time, so applicants should submit their requests and justifications as early in the planning process as possible. Applicants must ensure that PG&E has reviewed and approved their trenching plans before digging begins.

Figure 3-4, on Page 3-12, illustrates a "Typical Joint Service Trench." Separation and clearance details for the trenches are found in Table 3-1 on Page 3-13. Also, see PG&E Standard S5453, Exhibit B, *Joint Trench Configurations & Occupancy Guide*, located in Appendix B of this manual. This guide contains additional information and joint trench requirements. For PG&E-approved import material, see Appendix B for Engineering Material Specification Number 4123.

When applicants plan to use joint service trenches, they must ensure that the gas and electric meters are installed either adjacent to, or in close proximity to, each other. Section 5, "Electric Metering: General;" Section 6, "Electric Metering: Residential;" and Section 7, "Electric Metering: Commercial, Industrial, and Agricultural" provide information about determining acceptable locations for utility electric meters. Section 2, "Gas Service," Subsection 2.4.2., "Gas Meter-Set Locations," on Page 2-19, provides information about determining acceptable locations for utility gas meters.

Applicants must discuss the service arrangements and coordinate the meter locations and joint trench requirements with a PG&E project coordinator **before** installing utility conduits or gas service piping.

Applicants must ensure that when multiple service facilities (i.e., gas, electric, and telecommunications) are installed in close proximity (e.g., in a joint trench), a 12-inch minimum, radial separation is maintained where those facilities transition from below ground to above ground. PG&E allows an exception to that rule when the separation is between PG&E secondary, electric-service conduit and gas-service piping. In this instance, the minimum separation distance may be reduced to 6 inches. Clearances between other facilities can be reduced **only** when the facility owners reach a mutual agreement.

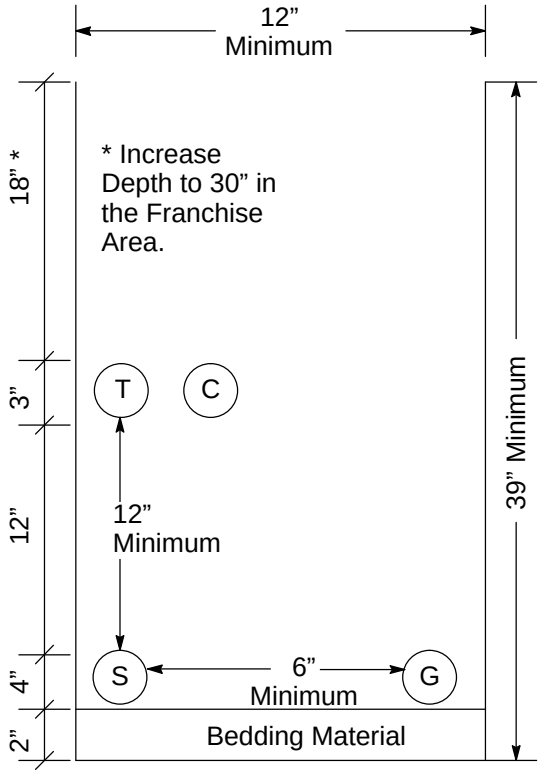

Figure 3-4
Typical Joint Service Trench

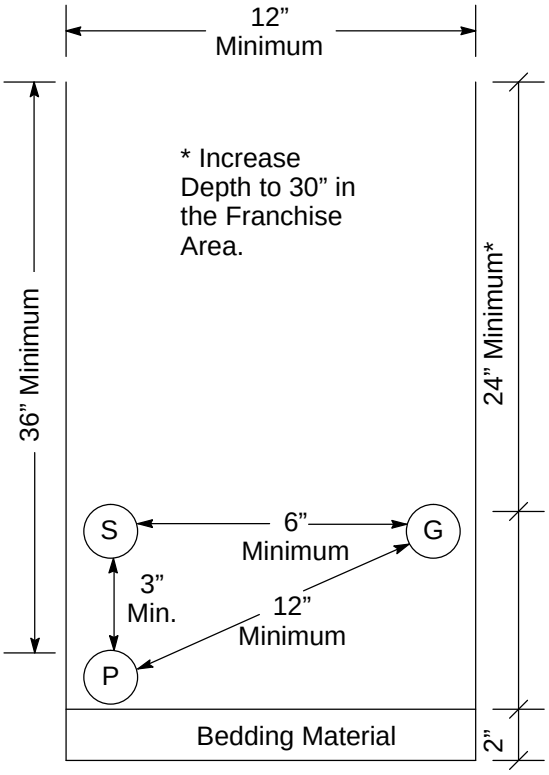

Figure 3-5
PG&E Electric and Gas
Service Trench

Notes in reference to Figure 3-4 and Figure 3-5.

1. Trench depth will vary depending on conduit size.
2. Soil compaction must meet PG&E’s and any applicable federal, state, county, and local requirements.
3. All separation and clearance dimensions must be met in Table 3-1 on Page 3-13.
4. For more information on Figure 3-4, see PG&E’s *Joint Trench Configurations & Occupancy Guide*, located in Appendix B.

Table 3-1 Minimum Separation and Clearance Requirements for Trenches[1]

		G	Duct T	DB T	C	S	P	SL
G	Gas[2]	-	12	12	12	6	12	6
T	Telephone (Duct)	12	-	1	1	12	12	12
T	Telephone (Direct Bury)	12	1	-	1	12	12	12
C	CATV	12	1	1	-	12	12	12
S	Electric Secondary	6	12	12	12	1.5	3	1.5
P	Electric Primary	12	12	12	12	3	3	3
SL	Streetlight[3]	6	12	12	12	1.5	3	1.5
NE	Foreign Electric Sourced (Non-PG&E)[4]	12	12	12	12	12	12	12

1 All separation clearance distances are in inches.
2 For more information about this table, see PG&E Bulletin TD-5453B-002, "Updated Separation Requirements for Conduit in Joint Trench, in Appendix B of this manual.
3 Streetlight circuits **not owned** by PG&E must be installed to meet the requirements in PG&E's *Joint Trench Configurations & Occupancy Guide*. Specifically, applicants must review the requirements for working with a second utility company.
4 Must be considered a "utility" as defined in PG&E Standard S5453.

Applicants must ensure that adequate amounts of space exist to maintain and operate the facilities. Applicants must ensure that the area immediately **behind** the gas meter, service facilities, and risers and **between** those facilities and the premises or structures being served is kept free and clear of all other facilities or equipment such as pipes, wires, cables, or conduits. See Section 2, Figure 2-19, "Electric and Gas Meter Set Separation Dimensions and Clearances," on Page 2-31.

NOTE: Applicants should consider installing conduit one size larger than the required minimum in case larger cable is required or needed for future upgrades. Refer to Subsection 1.14., "Determining the Service Rating," on Page 1-11, for a description of the methods PG&E uses to determine the ampacity (capacity) rating of customer equipment.

3.3.9. Providing a Service-Termination Facility

In addition to the requirements in Table 3-1, above, applicants must provide and maintain a satisfactory termination facility on or within the building or structure to be served.

PG&E will **not** install services supplied from different electrical sources in the same termination facility unless the services are separated using suitable barriers. When two or more services are in one termination facility, the minimum dimensions of each compartment created by the barriers must be the same as if each compartment were a separate termination facility.

3.3.10. Bioswales and Large Wet Locations

A bioswale is a long, channeled depression or trench that receives rainwater runoff and uses vegetation and organic matter to slow water infiltration and filter-out pollutants. A bioswale is considered a wet location and applicants must **not** install PG&E facilities that go through or close to a bioswale. Bioswale areas should be avoided and PG&E facilities should be designed to go around them. If applicants cannot avoid a bioswale area, they must apply additionally protective methods when designing PG&E facilities. Also see Numbered Document 038193, "Minimum Requirements for the Design and Installation of Conduit and Insulated Cable," located in Appendix C.

3.4. Electric Underground Documents

Table 3-2 below lists "Electric Underground Numbered Documents" that are provided at the back of this manual in Appendix C. Also, Appendix C provides electric underground documents that are not listed in the table below. See PG&E's Internet website at www.pge.com/greenbook to access the most recent versions of these documents **or** contact your local PG&E project coordinator. Most of these documents also are available in PG&E's *Electric Underground Construction Manual, Volume 1*.

Table 3-2 Electric Underground Numbered Documents

Section[1]	Document Number	Title
Connectors	013109	Corrosion Resistant Ground Rods and Ground Rod Clamps
Enclosures	028028	Secondary Enclosures for Electric Underground
Services	036670	Temporary Underground Electric Service Single-Phase, 120/240 Volt, 200 Amps Maximum
Transformers	045292	Concrete Pad for Three-Phase, Loop-Style, Pad-Mounted Transformers
General	051122	Clearances and Location Requirements for Enclosures, Pads, and Underground Equipment
Services	058817	Terminating Underground Electric Services 0−600 Volts in Customer-Owned Facilities
Transformers [2]	063422	Landscape Screen for Pad-Mounted Transformers
Services	063927	Methods and Requirements for Installing Residential Underground Electric Services 0−600 V to Customer-Owned Facilities
Services	063928	Methods and Requirements for Installing Commercial Underground Electric Services 0−600 Volts to Customer-Owned Facilities
Services	063929	Requirements for Bus Duct Entrance Termination Unit for Use With Pad-Mounted Transformers
Transformers	064309	Box-Pad for Pad-Mounted Transformers
General [2]	066211	PG&E Approved Electric Distribution Materials Manufacturers

1 For PG&E reference only: "Section" refers to the sections in PG&E's *Electric Underground Construction Manual, Volume 1*, which contains these documents.

2 This document is not in the *Electric Underground Construction Manual*.

3.4.1. Mandrels

The following section includes both an overview of, and a procedure for using, PG&E-approved, flexible-steel mandrels to prove conduit systems.

A. Using Mandrels to Prove Conduit Systems

Applicants must ensure that the conduit systems required for PG&E cables and/or conductors are installed in a trench that meets all of PG&E's requirements and specifications for the particular job or project. The conduit systems must meet PG&E's requirements for each specific installations, as well.

NOTE: The term "conduit system" includes conduits, conduit bends, conduit fittings, and all related components (e.g., bell ends and cable protectors) that are needed to install PG&E cables and conductors.

Applicants must ensure that conduit systems are **not** covered or hidden from view before the facilities are inspected visually by a PG&E field inspector. The inspector must determine if the conduit system and its installation comply with all of PG&E's specifications (e.g., type, size, schedule, radius of bends) and installation requirements before the customer backfills the trench.

After the conduit system passes PG&E's visual inspection, including visual verification of the conduit system's materials and the radius of the bends, the applicant must backfill the trench and compact the soil. Then, the applicant must provide PG&E with proof that the conduit system is in compliance by successfully inserting and pulling an approved, flexible-steel mandrel through the **entire** conduit system.

The PG&E inspector remains onsite to ensure that the appropriately sized and approved, flexible-steel mandrel is inserted and pulled through the length of the conduit system without encountering blockages or obstructions.

The applicant must provide the mandrel and appropriate pulling tape, as well as follow the procedures in Subsection B, below, for using the mandrel.

B. Procedure for Using Mandrels

Applicants must follow the procedural steps below when using a mandrel to prove a conduit system.

Step 1. Select the mandrel that is sized properly for the type of conduit that will be proven. See Figure 3-6, "Flexible Steel Mandrel," on Page 3-17, and Table 3-3, "Mandrel Dimensions, Part Numbers, and Order Codes," on Page 3-17, for mandrel specifications.

NOTE: For high-density polyethylene (HDPE) continuous conduit only (i.e., 3 inch, 4 inch, 5 inch, and 6 inch sizes), use the next smaller-size mandrel shown in Table 3-3 on Page 3-17.

Step 2. To pull the mandrel through the conduit, securely tie one end of the 2,500-pound pulling tape to the pulling eye of the mandrel. (The pulling tape was installed in the conduit previously.)

Step 3. Securely tie a second section of 2,500-pound pulling tape to the pulling eye located on the other end of the mandrel. This section of tape must be long enough to replace the pre-installed pulling tape completely.

Step 3. ensures that a run of pulling tape remains in the conduit after the mandrelling process is completed. Also, if the mandrel becomes blocked or stuck in the conduit, the second run of pulling tape allows the mandrel to be pulled back out of conduit **and** provides a means of measuring the distance to the point of blockage.

Step 4. After both pulling tapes are attached securely to the mandrel, insert the mandrel into one end of the conduit. Slowly start to pull the pulling tape at the opposite end of the conduit. This removes any slack in the pulling tape.

Step 5. Slowly pull the mandrel through the conduit by hand or non-mechanically. The rate of the pull should not exceed 100 feet per minute. Both the person pulling the tape and the PG&E inspector must check the pulling tape for signs of stress (i.e., molten plastic) as the tape comes out of the conduit.

NOTE: The PG&E inspector may **not** approve a section of the conduit if any portion of the pulling tape shows damage in the form of molten plastic. If the inspector decides to reject the conduit section, he or she will secure the melted section of pulling tape as evidence.

If the mandrel passes through the conduit without encountering any blockage or obstructions, the PG&E inspector approves the conduit section for use.

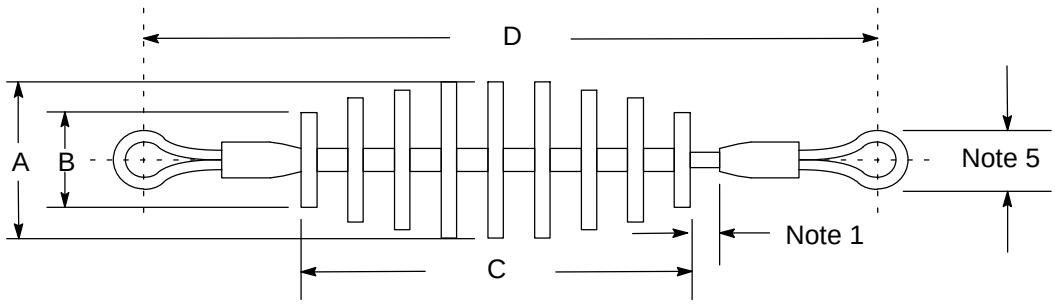

Figure 3-6
Flexible Steel Mandrel

Notes in reference to Figure 3-6.

1. The length must be adequate for the mandrel to pass through a 24-inch radius bend (all sizes).
2. The disks must be fabricated from 1/2-inch, flat, steel plate (average weight: 490 pounds per cubic foot) with a 7/16-inch hole for the 3/8-inch cable.
3. The spacers must be fabricated from 1/2-inch iron pipe size (IPS) pipe with a minimum inside diameter of 0.6 inches.
4. Cable size: 3/8-inch, 6 x 19 mild, plow-steel hoisting rope.
5. The outside diameter of the eye must not exceed Dimension A.
6. The size must be stamped permanently into one end of the plates.

Table 3-3 Mandrel Dimensions, Part Numbers, and Order Codes[1]

Size (In Inches)	PG&E Code	Manufacturer Part Numbers[3]	Dimensions (In Inches)				
			A	B	C	D[2]	Spacer Length
2	202567	08400−200	1.69	1.69	6.5	15	0.25
3	202570	08400−300	2.65	1.65	10.5	23	0.75
4	202571	08400−400	3.57	2.57			
5	200911	08400−500	4.56	3.56			
6	202572	08400−600	5.51	4.51			

1 For HDPE continuous conduit only (sizes 3 inches, 4 inches, 5 inches, and 6 inches), use the next-smaller-size mandrel.

2 “D” dimensions are approximate.

3 PG&E’s approved mandrel manufacturers, DCD Design & Manufacturing.

Table 3-4 Businesses That Sell or Rent Mandrels[1]

Company	Street Address	City	Zip	Phone Number
Utility Division Locations (UDL)	5275 Central Ave.	Fremont	94536	(510) 656-9680
WESCO	1544 N. Maple Ave.	Fresno	93703	(559) 255-4423
WESCO/Herning	4925 E. Annadale Ave.	Fresno	93725	(559) 443-5600
WESCO/Herning	567 Exchange Ct.	Livermore	94550	(925) 449-2550
Pacific Utilities Supply Co.	2475 Estand Way	Pleasant Hill	94523	(925) 674-1600
WESCO	1045 W. National Dr. Suite 19	Sacramento	95834	(916) 928-1001
Independent Electric Supply (IES)	1370 Bayport Ave.	San Carlos	94070	(650) 594-9440
WESCO	2800 Mead Ave.	Santa Clara	95051	(408) 562-0400
Independent Electric Supply (IES)	2801 Research Park Dr.	Soquel	95073	(831) 464-3232
Utility Division Locations (UDL)	200 East Larch Rd.	Tracy	95304	(209) 832-2038
Utility Division Locations (UDL)	4076 Channel Dr.	West Sacramento	95691	(916) 376-8400

[1] Mandrels must be from the approved manufacturer listed in Table 3-3 on Page 3-17.

Section 4
Electric Service: Overhead

SECTION 4 ELECTRIC SERVICE: OVERHEAD

Section 4
Electric Service: Overhead

4.1. Scope

This section of the manual provides instructions and minimum clearance requirements for attaching permanent, overhead services to residential and nonresidential properties. The term "residential" includes mobile homes installed on foundations in locations other than mobile home parks.

NOTE: Requirements for installing and attaching PG&E overhead services may be different than local city or county ordinances, as well as national or California electric codes. Contact your local PG&E project coordinator if you have questions. See Table FM-1, "Service Planning Office Contact Information," at the front of this manual starting on Page iv, for specific contact numbers listed by area.

4.2. General

Pacific Gas and Electric Company (PG&E) will **not** supply new overhead services to applicants when either of the following conditions exist:

A. When buildings or premises are located in areas designated either by local jurisdictions or by PG&E as underground districts.

B. When buildings or premises are located in areas zoned for commercial or residential use and the installed service equipment and/or load requires PG&E to use a 75-kilovolt ampere (kVA) or larger transformer.

4.2.1. Safety Reminder

CAUTION

Flame resistant (FR) clothing is required while working on, working near, or observing others working on any PG&E facility.

4.3. Locating Overhead Services

4.3.1. Point of Attachment

In areas served from overhead lines, PG&E will install an overhead service drop from the Company's distribution line to a point of attachment on the applicant's residence, building, or structure. PG&E follows the guidelines listed below to ensure the service is installed safely and efficiently.

A. The point of attachment must be located so it can be reached with a single span from PG&E's facilities.

B. The span should **not** cross over adjacent property, if possible.

C. The span must maintain the required, vertical, clearance-to-ground.

The point of attachment may be either on the building wall near the PG&E line or on a periscope fixed to the building's roof, usually not more than 18 inches in back of that wall. Figure 4-1, "Preferred and Alternate Locations for the Overhead Service Drop Attachment," below, provides more information about the point of attachment.

Applicants must consult PG&E **before** installing the building's wiring. PG&E must approve of the location selected for the utility service attachment.

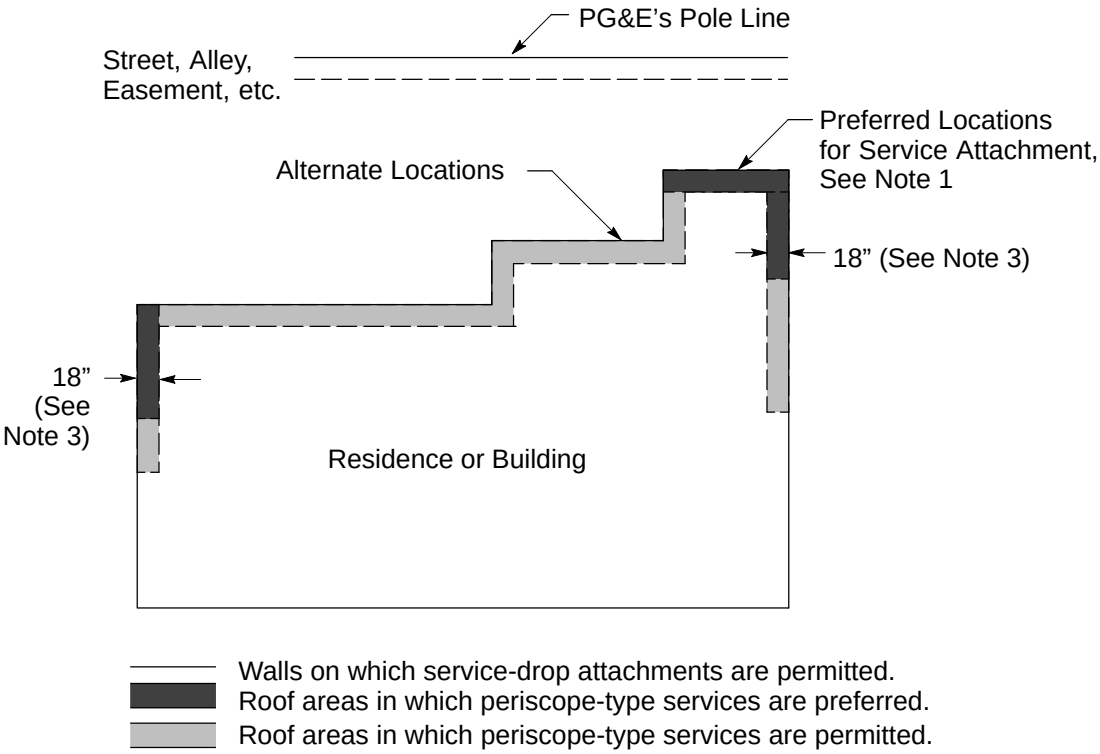

Figure 4-1
Preferred and Alternate Locations for the Overhead Service Drop Attachment (see Note 2)

Notes in reference to Figure 4-1.

1. Applicants may attach service drops to sidewalls. Applicants must ensure that the service-drop conductors do **not** exceed 75 feet and do **not** cross over either the buildings being served or the adjacent property. Finally, applicants must ensure that the required conductor clearances and accesses to the electric meters are maintained.
2. For more information on meter location requirements, see Section 5, "Electric Metering: General;" Section 6, "Electric Metering: Residential;" and Section 7, "Electric Metering: Commercial, Industrial, and Agricultural" (as applicable). For available short-circuit current information and requirements, see Subsection 5.7.2., "Main Service Disconnect Switch Rated for Amperes Interrupting Capacity (AIC)," found on Page 5-22.
3. The **required** maximum setback affects nonresidential customers only. The preferred maximum setback is for residential installations, but is not required.

4.3.2. Two or More Buildings on One Lot

If more than two dwellings or buildings are located on the same lot, applicants must consult PG&E to determine acceptable service attachments and meter locations **before** wiring the buildings.

Typically, PG&E installs only one service lateral to a single building on one premise, or to one enterprise (with either one building or multiple buildings) on a single premise. However, PG&E may provide more than one service lateral under the following circumstances.

- Where it is allowed or required by PG&E's tariff schedules.
- For PG&E's convenience.
- Where it is required by ordinance.
- When it is installed as a special facility.

4.4. Service Drop Clearances

NOTE: See Table FM-1, "Service Planning Office Contact Information," starting on Page iv, for specific contact numbers listed by area.

Applicants can request a PG&E project coordinator to specify a location for service drop attachments. When PG&E selects the location, applicants are assured that the service conductors will maintain the required clearances above thoroughfares and structures, as well as the required clearances away from windows, doors, and building exits.

The minimum clearances from the ground, structures, and other objects for overhead service drops are specified in the California Public Utilities Commission's (CPUC's) *General Order (G.O.) 95*, "Rules for Overhead Electric Line Construction." Figure 4-2 through Figure 4-20 list and illustrate these minimum clearances.

Applicants must ensure that the elevation at the point of attachment is high enough to maintain all of the required vertical clearances. Applicants should allow for normal conductor sag when determining these vertical clearances.

G.O. 95 allows the vertical clearance restrictions for service drops to be reduced in certain instances. PG&E's review and approval is required before any reductions in vertical clearances are allowed. **Applicants should contact PG&E as soon as possible in the planning phases of their projects to ensure that any potential problems or exceptions are addressed before construction begins.**

Requirements for installing and attaching PG&E overhead services may be different than local electrical codes.

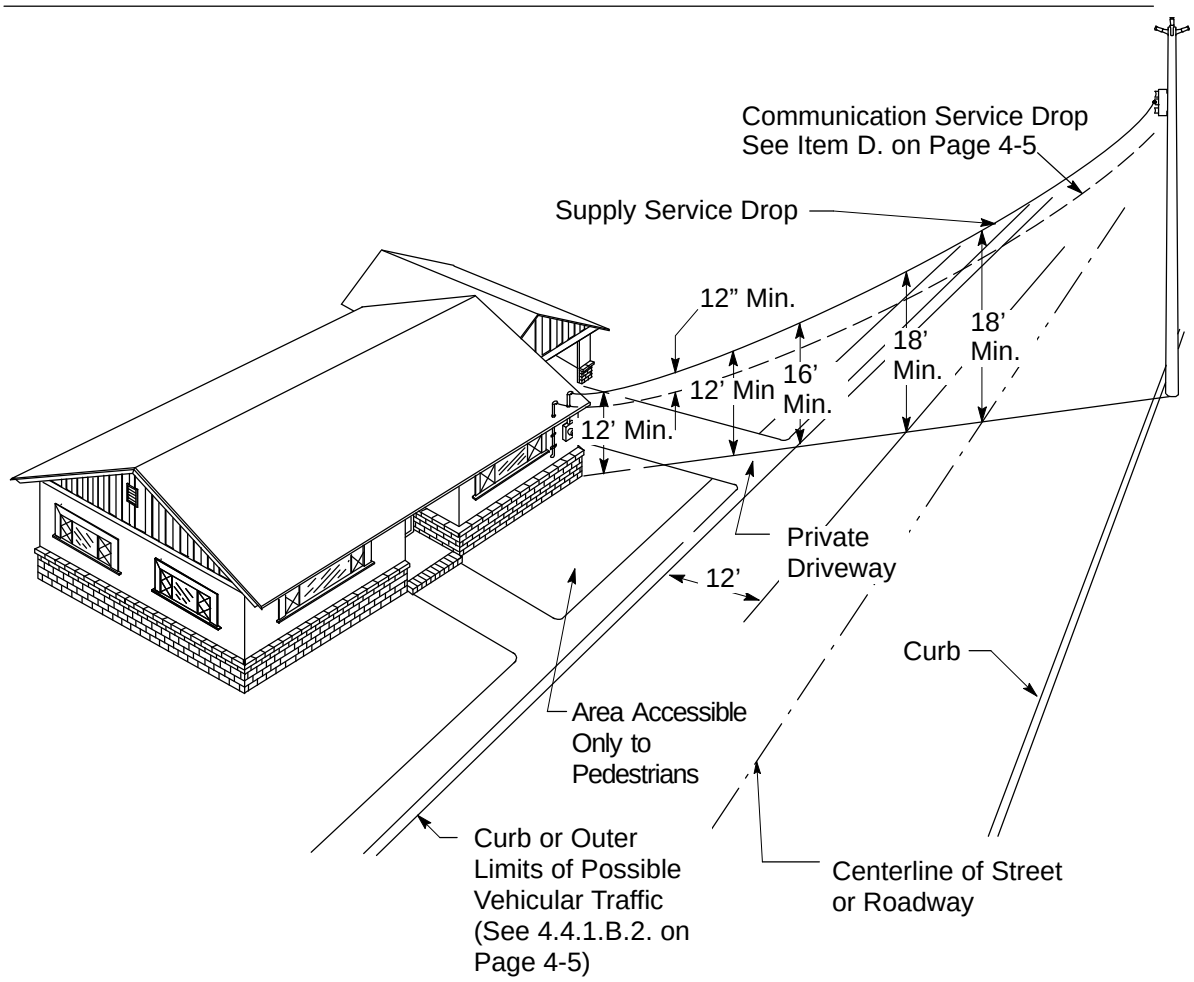

Figure 4-2
Ground Clearances for Supply Service Drops, 0 Volts Through 750 Volts, Residential Installations (Required by the CPUC)

4.4.1. Vertical Clearance for Residential, Overhead Service

A. Clearance Above Rails

Applicants must ensure that the following clearances are maintained when requesting electric service be placed over train or trolley tracks.

1. Crossing above railroad tracks **without** overhead trolley wire: 25 feet.
2. Crossing above railroad tracks **with** overhead trolley wire:
   - Above rails where freight cars are transported: 26 feet.
   - Above rails where freight cars are not transported: 23 feet.

B. Clearance Above Thoroughfares in Public Areas and in Private Communities of 10 or More Residences

Applicants must ensure that the following clearances are maintained when requesting electric service be placed above thoroughfares in public and private communities with more than 10 residences.

1. Crossing above the center portion between points 12 feet horizontal from curbs: 18 feet.
2. Crossing at the curb line (from the level of the street, not the sidewalk): 16 feet.
3. Crossing where there are no curbs: applicants must consider the curb line as the outer limit of possible vehicular traffic: 16 feet.

C. Clearance Over Residential Property

Applicants must ensure that the following clearances are maintained when requesting electric service be placed over residential property.

1. Crossing over private roads and other areas accessible to agricultural equipment: 15 feet.
2. Crossing over agricultural equipment: maintain 16 feet, if possible.
3. Crossing over private driveways or other areas accessible to vehicles: 12 feet.
4. Crossing over areas accessible to pedestrians only: 12 feet.

D. Clearance From Communication Service Drops

Applicants must ensure that the following clearances are maintained when requesting electric service be placed over communication service drops.

1. Normal radial clearance: a minimum of 24 inches.
2. Within 15 feet of the point of attachment on a building or structure: the normal radial clearance may be reduced to a minimum of 12 inches.

E. Clearance From Swimming Pools

Avoid installing utility service drops above public and private swimming pools, when practical.

The CPUC, not local agencies or codes, regulates, by its adoption of *G.O. 95*, the installation and clearances of utility-owned, operated, and maintained supply lines and service drops. *G.O. 95* contains specific requirements for installing and maintaining utility supply-line and service-drop clearances above swimming pools. Figure 4-3, “Minimum Clearance for All Drops Above or Adjacent To Swimming Pools,” on Page 4-6, illustrates the minimum-permitted clearances mandated by *G.O. 95* where utility service drops are installed above swimming pools.

NOTE: Table 4-1, “Minimum Clearances Over Swimming Pools,” on Page 4-6, also provides clearance information for drops above or adjacent to swimming pools.

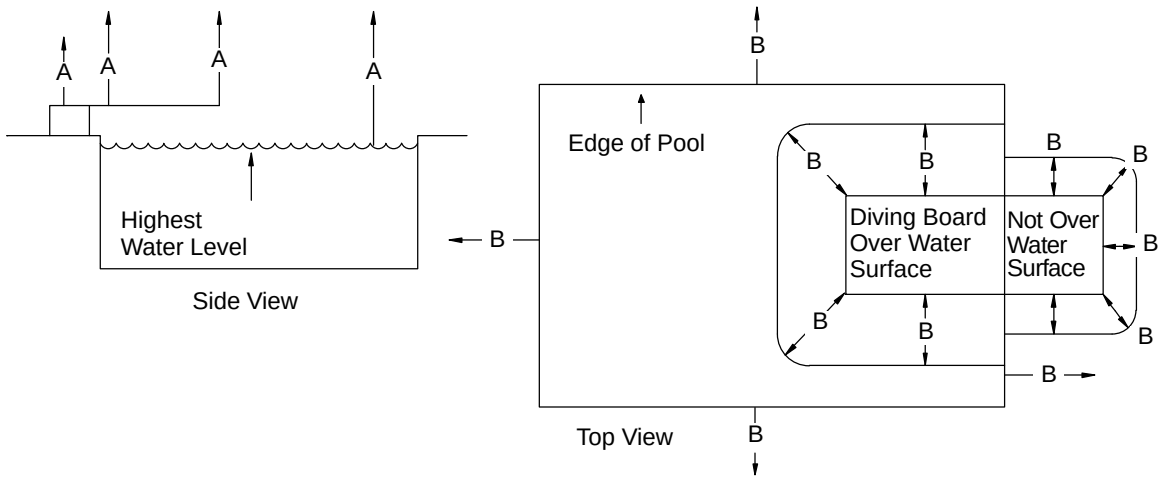

Figure 4-3
Minimum Clearance for All Drops Above or Adjacent To Swimming Pools

Table 4-1 Minimum Clearances Over Swimming Pools[1]

Minimum Vertical and Radial Clearances	A Vertical	B Radial
	(In Feet)	
Unprotected Line Conductors-Vertical Over the Highest Water Level and Radial From the Top Edge of the Pool Walls:		
1. 0 through 750 volts	20	20
2. Above 750 volts through 22,500 volts	25	25
3. Above 22,500 volts through 300 kilovolts (kV)	30	30
Service Drops-Vertical Over the Highest Water Level and Radial From the Top Edge of the Pool Walls:		
4. Pools: public and commercial	16	16
5. Pools: residential	12	12
Service Drops (Over Diving Boards or Platforms):		
6. Portion of the board or platform that is over the water's surface	16	8
7. Portion of the board or platform that is **not** over the water's surface	12	3
Guys−Ungrounded Portions:		
8. Over the highest water level and from the top edge of the pool walls	18	18
9. Over the diving board or platform (the portion that is over the water's surface)	18	8
10. Over the diving board or platform (the portion that is **not** over the water's surface)	12	6
Guys−Grounded Portions:		
11. Over the highest water level	16	—
12. Over the diving board or platform (the portion that is over the water's surface)	16	8
13. Over the diving board or platform (the portion that is **not** over the water's surface)	8	3

[1] Clearance requirements may be different than local electrical codes.

4.4.2. Clearance Above Buildings

Table 4-2, “Minimum Allowable Clearance of Service Drops From Buildings − 0 Volts Through 750 Volts,” below, lists the required clearances for buildings that are receiving electric service.

Table 4-2 Minimum Allowable Clearance of Insulated Service Drops From Buildings − 0 Volts Through 750 Volts

	Minimum Clearance From Buildings
	Insulated Conductors (See Note 1) **0 Volts Through 750 Volts**
Vertical Clearances Above:	
1. All portions of buildings including metallic or nonmetallic cornices, decorative appendages, eaves, roofs, or parapet walls of the building being served.	See Notes 2, 3, and 4
2. Metallic or nonmetallic, “nonwalkable” overhang, patio cover, or other structure.	See Notes 2 and 3
3. Other buildings on the same premises.	2 Feet
4. Buildings on other premises.	8 Feet (See Note 5)
Horizontal and Radial Clearances:	
1. From fire escapes, exits, windows, and doors.	3 Feet

1 Weather-resistant, covered conductors are **not** used in new installations. See G.O. 95, Rule 54.8, “Service Drops, 0 −750 Volts,” Table 10, “Minimum Allowable Clearance of Service Drops 0−750 Volts from Buildings,” on Page V-72, for insulated conductor clearances.

2 Not less than 1/2 inch for residential services. Not less than 12 inches for nonresidential services as shown in Figure 4-13 through Figure 4-20 on Page 4-13.

3 An applicant must ensure that the service drop’s point of attachment for industrial and commercial premises is no more than 18 inches. Take this measurement from **behind** the front face of the building wall facing the pole line from which the service drop originates.

4 Clearance requirements may be different than local electrical codes.

5 Reduce to 2 feet for nonmetallic roofs when the roof slope exceeds 9 inches of rise per 12 inches of run. (See Figure 4-4, “Nonmetallic Roof,” below.)

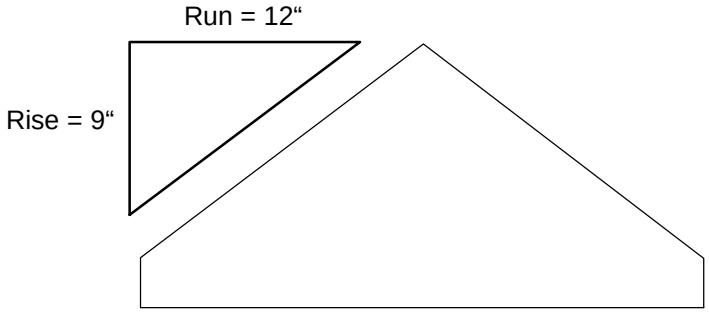

Figure 4-4
Nonmetallic Roof

4.4.3. Clearance at the Residential Point of Attachment

PG&E recommends that applicants do **not** locate electric supply and communication services in the same vertical plane. Figure 4-11, one of the "Clearance at the Residential Point of Attachment" illustrations, found on Page 4-9, shows the recommended arrangement for the communication service drop.

Typically, the service drop is attached **below** the level of the service weatherhead; however, it may be attached **above** the service weatherhead, as shown in Figure 4-7 and Figure 4-9, **both** located on Page 4-9, if the two following situations exist.

A. It is impractical to attach the service drop below the level of the service weatherhead.

B. The service-drop conductor's attachment point is located 24 inches or less from the service weatherhead.

Applicants must ensure that the line length of the open wiring (i.e., drip loop) between the point of service attachment and service weatherhead does **not** exceed 3 feet.

Applicants must ensure that the clearance requirements for the PG&E overhead service are met. These clearances may be greater than local electrical codes.

PG&E will **not** attach services to periscope structures made of plastic.

Figure 4-5 through Figure 4-11, all representing "Clearance at the Residential Point of Attachment," provide examples of clearances for overhead service-drop installations and terminations. These seven figures are located on Page 4-9.

NOTE: For overhead, temporary services, refer to Numbered Document 025055, "Requirements For Customer-Owned Poles," in Appendix C, "Electric and Gas Engineering Documents."

NOTE: Refer to PG&E Bulletin TD-2999B-030, "Technical Requirements for Electric Service Interconnection at Primary Distribution Voltages," in Appendix B, "Electric and Gas Service Documents," for technical information on primary services.

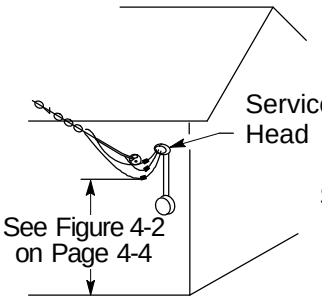

Figure 4-5

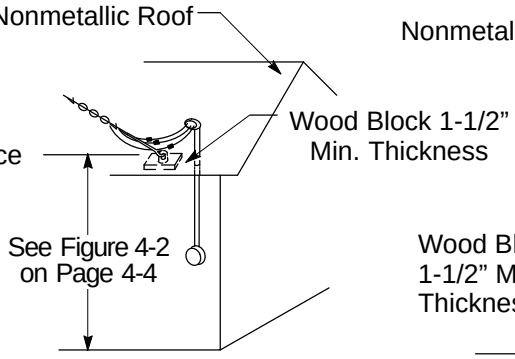

Figure 4-6

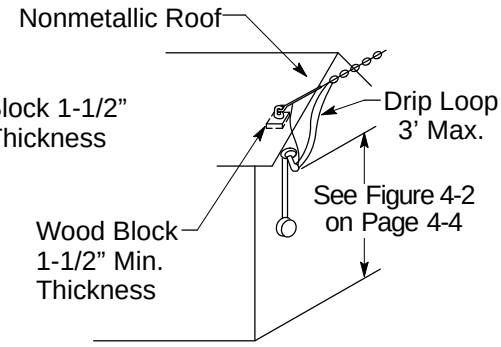

Figure 4-7

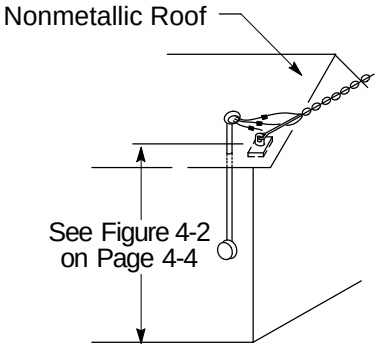

Figure 4-8

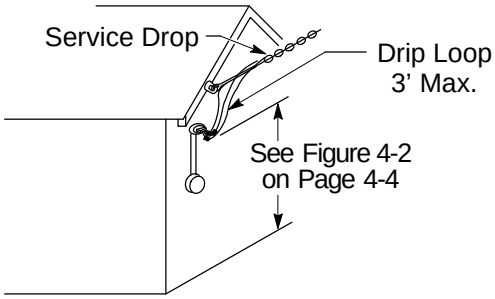

Figure 4-9

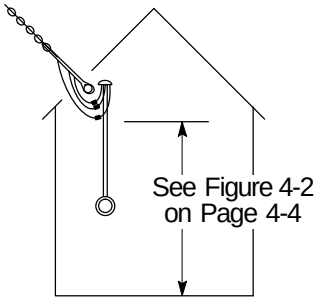

Figure 4-10

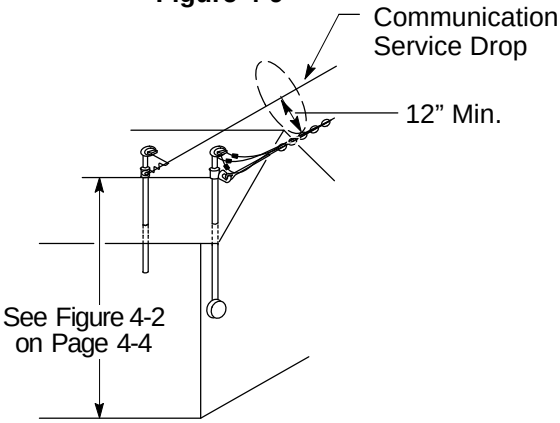

Figure 4-11

Clearance at the Residential Point of Attachment

4.4.4. Vertical Clearance on Nonresidential Property

Table 4-3, "Vertical Clearance From the Ground on Nonresidential Property," located below, provides the minimum vertical distance (in feet) from the ground on nonresidential property.

Applicants must ensure that periscope attachment structures are constructed with one of the following, approved materials.

- 1-1/4-inch minimum, galvanized rigid steel (GRS) or intermediate metal conduit (IMC) rigid steel.
- 2-inch minimum rigid aluminum conduit measured in iron pipe size (IPS) dimensions.

PG&E will **not** attach a span to plastic periscope structures.

Periscope extensions projecting above the roof may require bracing against the pull of the service-drop conductors, as shown in Figure 4-39, "Unbraced Periscope Structure (Residential and Nonresidential)," found on Page 4-23.

Typically, the service drop is attached **below** the level of the service weatherhead; however, it may be attached **above** the service weatherhead if **both** of the following situations exist.

- It is impractical to attach the service drop below the level of the service weatherhead.
- The attachment point on the service-drop conductors is located less than 24 inches from the service weatherhead.

Ensure the length of the open-wire drip loop does **not** exceed 3 feet.

PG&E connects the Company's service conductor and an applicant's service-entrance conductor **below** the service weatherhead.

Table 4-3 Vertical Clearance From the Ground on Nonresidential Property[1]

Description	Minimum Vertical Distance (In Feet)
Over private driveways, lanes, and other areas (e.g., alleys and parking lots) accessible to vehicles.	16
Over areas accessible to pedestrians only.	12
Over buildings and bridges, or over structures (attached or unattached) that do **not** ordinarily support conductors and on which people can walk.	8

[1] Clearance requirements may be different than local electrical codes.

A. Clearance From Communication Service Drops

Applicants must ensure that the following clearances are maintained when requesting electric service to be placed over communication service drops.

1. Normal radial clearance: a minimum of 24 inches.
2. Within 15 feet of the point of attachment on a building or structure: the normal radial clearances may be reduced to a minimum of 12 inches.

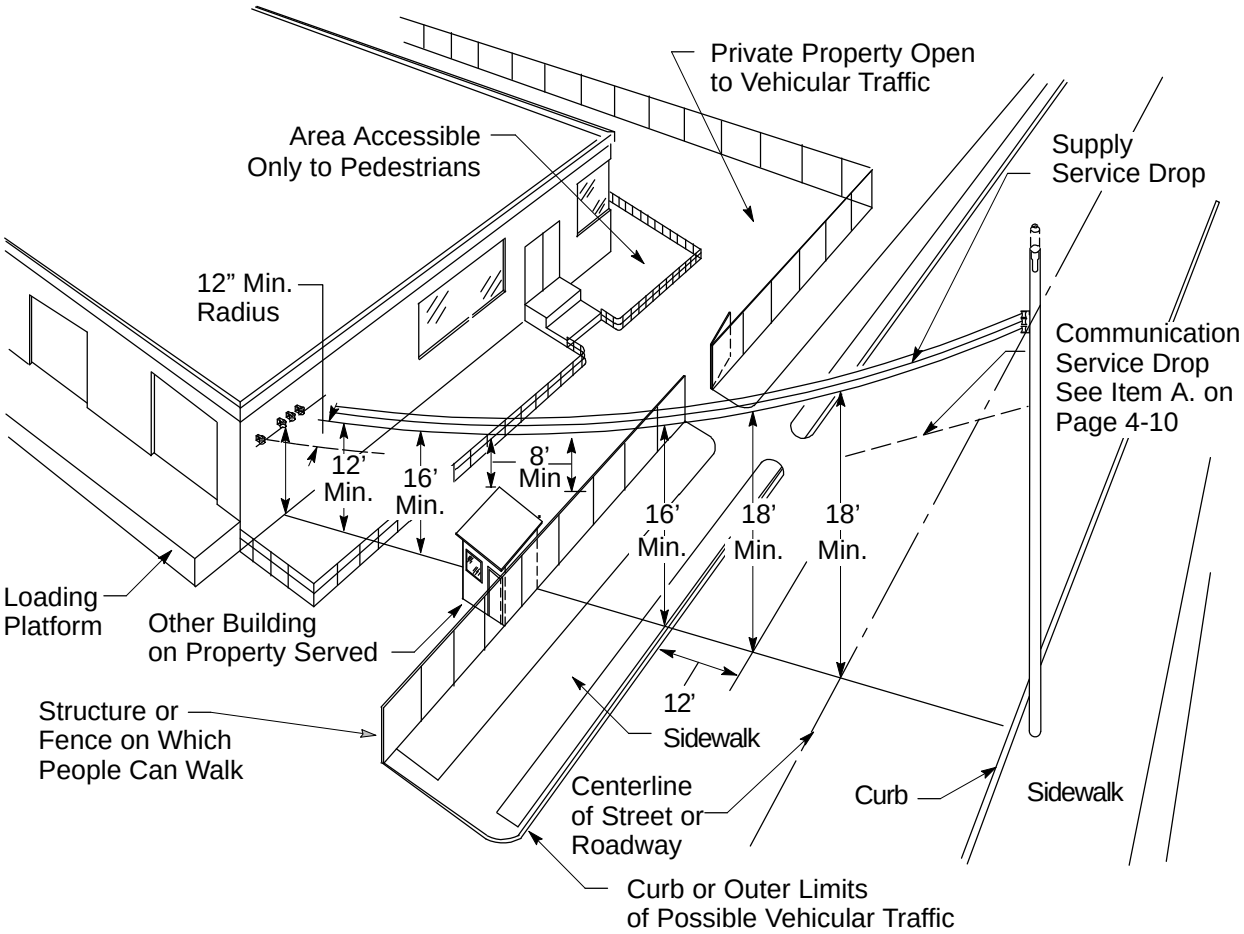

Figure 4-12
Ground Clearances for Supply Service Drops, 0 Volts Through 750 Volts, Industrial and Commercial Installations (Required by the CPUC)

Figure 4-13 through Figure 4-20, all representing “Clearances for Nonresidential Buildings Using Insulated Conductors” and all located on Page 4-13, show overhead service drops and vertical-clearances, as measured from the ground, for commercial and industrial installations and large residential buildings.

4.4.5. Clearances for a Nonresidential Building Service Drop Using Cable or Equally Insulated, Open-Wire Service Conductors

Applicants can use the clearances shown in Figure 4-13 through Figure 4-20 only when they use Type N-SD service-drop cable, or equally insulated cable, open-wire service conductors. Applicants must **not** use weatherproof-rated conductors.

Figure 4-12, “Ground Clearances for Supply Service Drops, 0 Volts Through 750 Volts, Industrial and Commercial Installations (Required by the CPUC),” located above, provides the required clearances from a service drop to the ground.

Figure 4-21, “Clearance Around Windows,” and Figure 4-22, “Clearance Around Doors,” both located on Page 4-14, provide applicants with the required clearances from fire escapes, exits, windows, doors, and other locations where people could be present.

Applicants must use a 1-1/4-inch minimum GRS or IMC rigid steel, or 2-inch minimum rigid aluminum conduit (IPS dimensions) for all periscope attachment structures. See Figure 4-13, Figure 4-14, Figure 4-15, Figure 4-19, and Figure 4-20, all representing “Clearances for Nonresidential Buildings Using Insulated Conductors,” found on Page 4-13, for examples.

The clearances shown in Figure 4-13 through Figure 4-20 only apply to insulated services, up to a 750-volt maximum, over nonmetallic roofs or decorative appendages. Applicants also should refer to the service-entrance, conductor-clearance requirements found in the *State Building Standards Electrical Code*.

The special 24-inch minimum clearance, illustrated in Figure 4-20, is applicable only to service-drop cable.

Either brace the periscope attachment structures as shown, or ensure that the structures are supported using similar, acceptable methods. For more information on bracing periscope attachment structures, see Figure 4-34 and Figure 4-35, both representing “Service to Nonresidential Premises,” and both found on Page 4-18. Also, see Figure 4-38, “Braced Periscope Attachment Structure,” found on Page 4-20, and Table 4-5, “Maximum Mast Height Above the Roof *Without* Bracing,” found on Page 4-22.

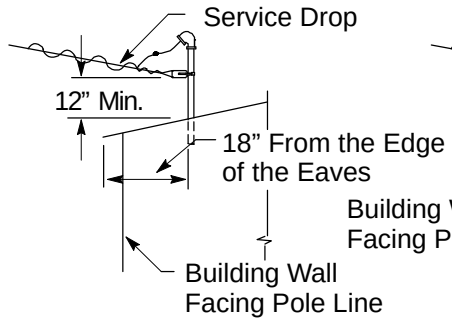

Figure 4-13

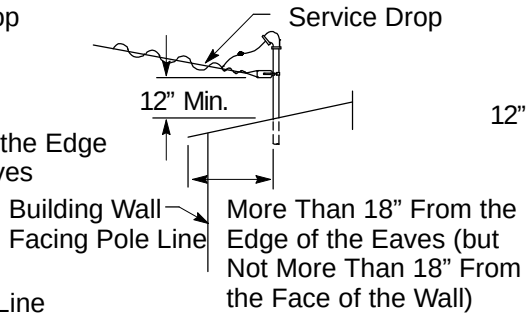

Figure 4-14

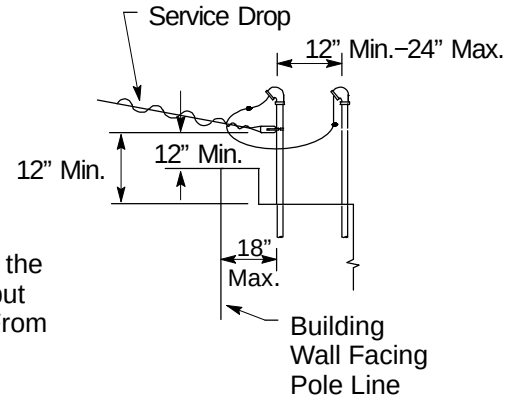

Figure 4-15

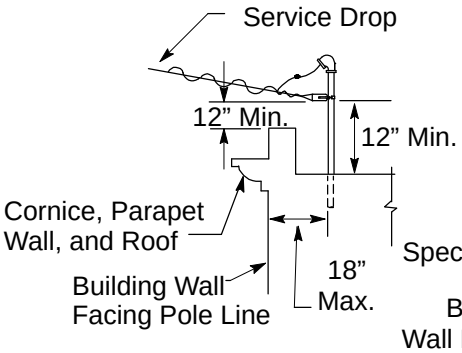

Figure 4-16

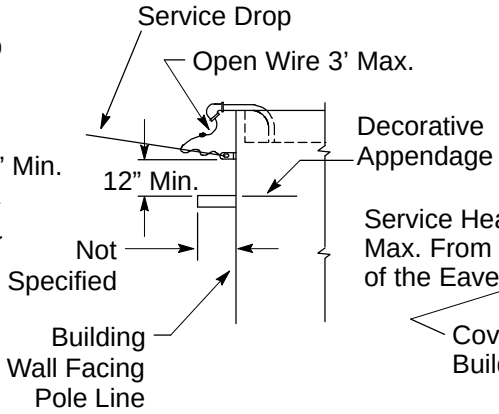

Figure 4-17

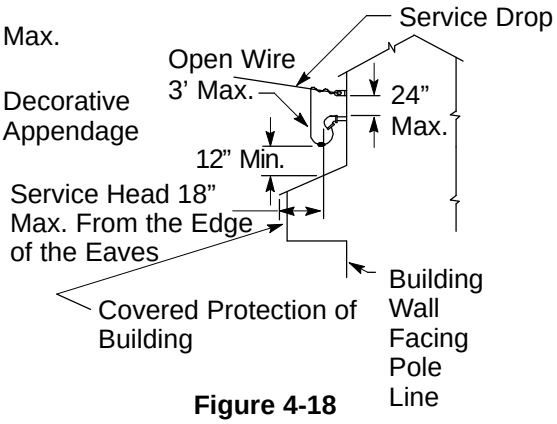

Figure 4-18

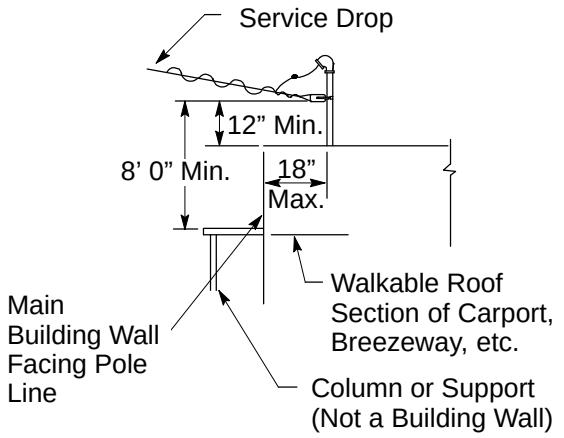

Figure 4-19

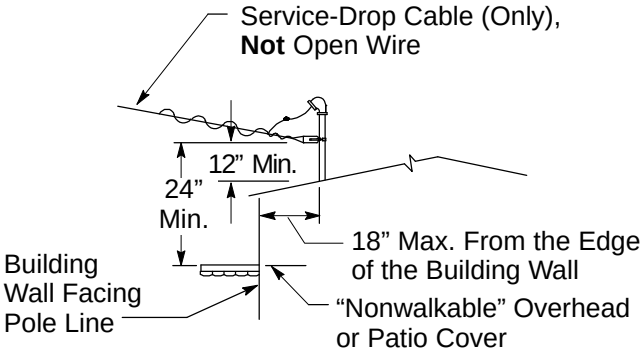

Figure 4-20

Clearances for Nonresidential Buildings Using Insulated Conductors (0 Volts–750 Volts)

4.4.6. Clearances Around Doors and Windows

Service drops are not required to clear **buildings** by any specified horizontal distance; however, applicants must ensure that the service weatherhead, the service drop, and the open wires between the service weatherhead and the service drop maintain the following clearances from fire escapes, balconies, stairways, exits, doors, windows, and other locations where people could be present.

A. Wires that are either at or below the level of the top of exits, doors, windows, and other openings **must** have a radial clearance from the boundaries of such openings of not less than 3 feet, as shown in Figure 4-21 below.

B. Wires less than 8 feet above, or 3 feet below, the surface levels of fire escapes, balconies, porches, stairways, and walkways **must** have a minimum horizontal clearance of at least 3 feet from such surfaces, as shown in Figure 4-22 below.

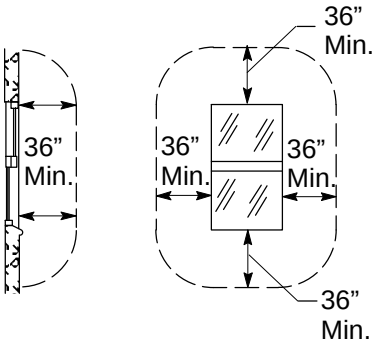

Figure 4-21
Clearance Around Windows

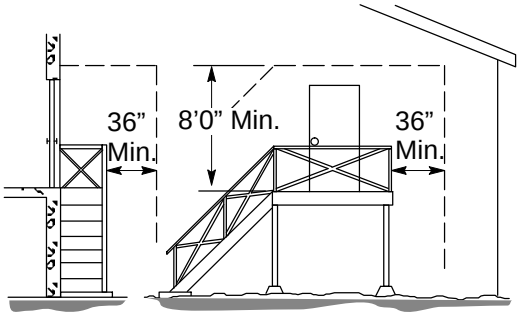

Figure 4-22
Clearance Around Doors

4.4.7. Clearance Between Service Drop Wires

The minimum-allowable radial clearance between service drop sites (i.e., 0 volts through 750 volts) in the span from the pole to the building, and a point of attachment to the building, is 3 inches. Applicants must ensure that wire supports at the building are spaced 8 inches apart, where practical.

4.4.8. Clearance From Applicant-Owned Service Poles

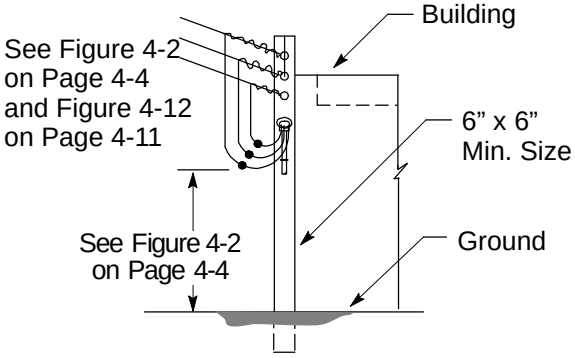

Figure 4-23
Service Attachment Structure or Service Pole Secured to a Building

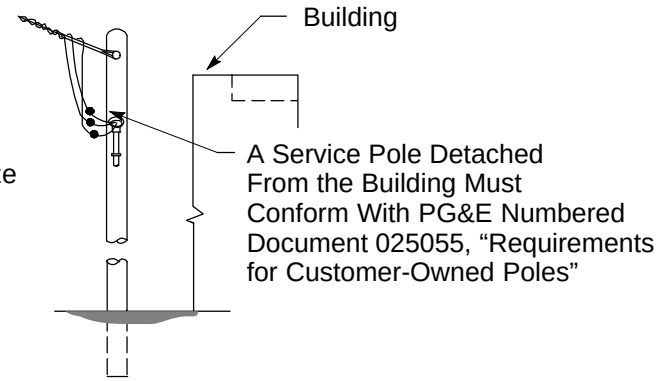

Figure 4-24
Service Pole Detached From a Building

4.5. Service Attachments

Applicants must ensure that utility service drops (i.e., 0 volts through 750 volts) are **not** attached directly to metal roofs.

4.5.1. Attaching Low-Voltage, Residential, Overhead Service Drops

Applicants must ensure that the service drop’s point of attachment to the building is high enough to provide the minimum legal clearances shown in Figure 4-2 on Page 4-4.

Subsection 4.6., “Attachment Structures (Periscopes),” found on Page 4-21, provides information on installing and using periscopes as attachment structures.

Whenever practical, attach the service drops below the level of the service weatherhead, as shown in Figure 4-29, “Cable (Single Spool),” and Figure 4-30, “Open Wire or Cable (Cable Shown),” both of which are found on Page 4-16, and Figure 4-39, “Unbraced Periscope Structure (Residential and Nonresidential),” found on Page 4-23.

In all installations, PG&E connects to the applicant’s service-entrance conductor **below** the level of the service weatherhead. Drip loops are included at the entrance of each conductor to the service weatherhead. These drip loops prevent moisture from penetrating the installations.

The standard service attachments shown in Figure 4-25 through Figure 4-30, all representing “0-Volt Through 300-Volt Service at Residential Premises” and found on Page 4-16, are designed according to the CPUC’s *State Building Standards Electrical Regulations*, to California electrical code**,** and to PG&E requirements. Local authorities may have additional requirements.

NOTE: PG&E will attach a service knob to a stud (e.g., 2 inch x 4 inch) or rafter, if possible. PG&E will **not** mount the service knob directly to the roof or attach it to corner trim or roof trim without a 2 inch x 4 inch-sized stud or larger. Figure 4-36, "Building Attachment–Service Knob," Detail A, found on Page 4-20, provides the requirements for attaching service knobs.

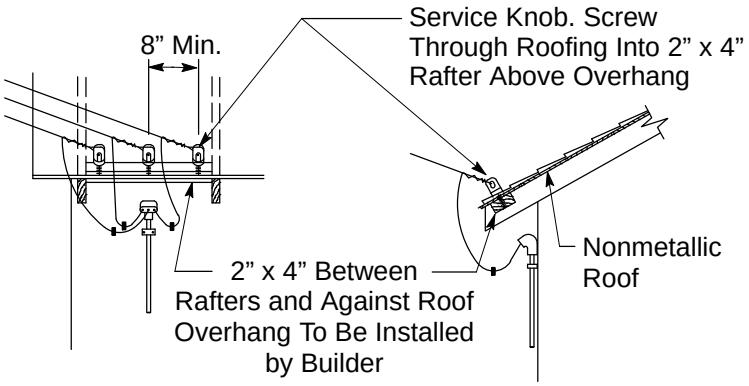

Figure 4-25
Open Wire

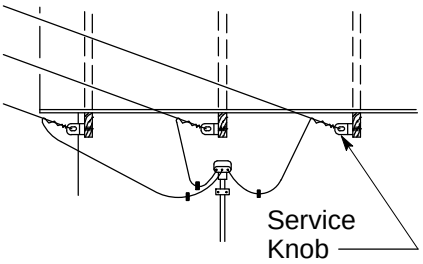

Figure 4-26
Open Wire or Cable
(Open Wire Shown)

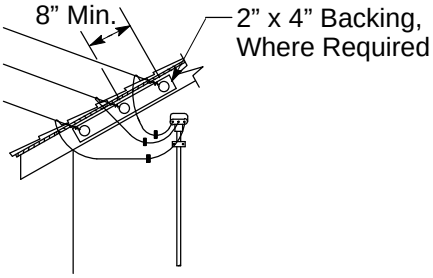

Figure 4-27
Open Wire or Cable (Open Wire Shown)

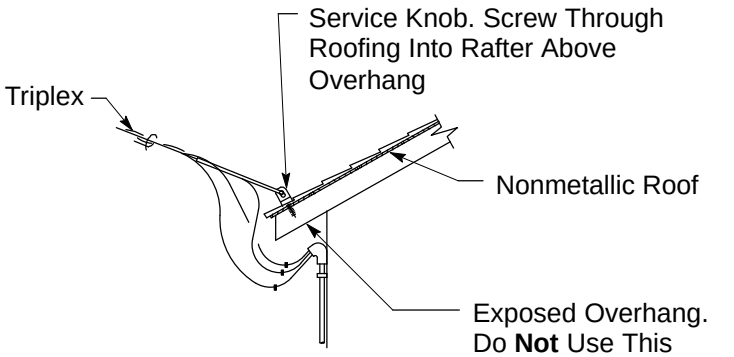

Figure 4-28
Cable (Using Triplex)

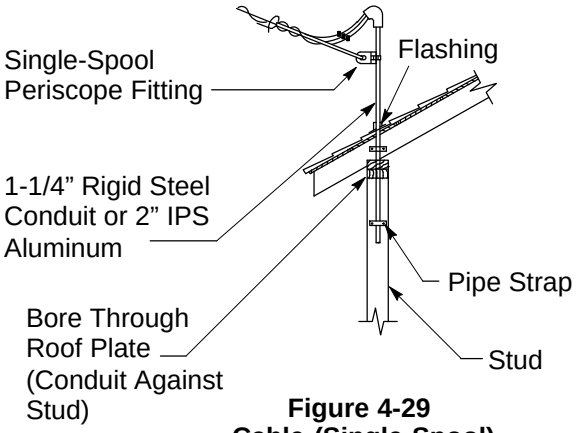

Figure 4-29
Cable (Single Spool)

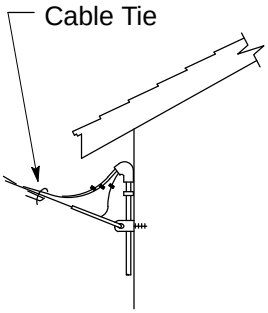

Figure 4-30
Open Wire or Cable
(Cable Shown)

4.5.2. Attaching Low-Voltage, Nonresidential, Overhead Service Drops

When applicants plan to install service-entrance wiring larger than that shown in Figure 4-31 through Figure 4-34, all representing “Service to Nonresidential Premises” and found on Page 4-18, they must consult PG&E **before** they begin construction to obtain instructions on attaching the wiring properly.

Figure 4-31, “Service Drop Cable, 4/0 and Smaller, Triplex or Quadruplex,” shows applicants how to attach the wiring using service knobs in either concrete or masonry walls. Service knobs must be screwed into wood-frame walls.

Figure 4-32, “New Wall, 1/0 kcmil to 397.5 kcmil Aluminum,” shows applicants how to attach the wires using insulated clevises on concrete walls. For wood-frame walls or masonry walls (e.g., brick, hollow tile, cinder block), applicants must bolt the attachments through the wall. Where service is attached to masonry walls, applicants must install bracing or attachment structures.

When it is practical to do so, applicants must attach service drops **below** the level of the service weatherhead.

PG&E will furnish the bolts and insulators needed to secure the service drop to the building or attachment structures. Applicants can attach the service drop to the walls or to periscope structures either horizontally or vertically.

The wire sizes shown in Figure 4-31 through Figure 4-35 refer to service drops, not to service-entrance wires.

Open wiring, or drip loop, installed between the service drop attachment and the service weatherhead, must **not** exceed 3 feet.

Applicants must install periscope structures as illustrated in Figure 4-39 on Page 4-23. See Subsection 4.6. on Page 4-21 for additional information on installing periscopes and using periscopes as attachment structures.

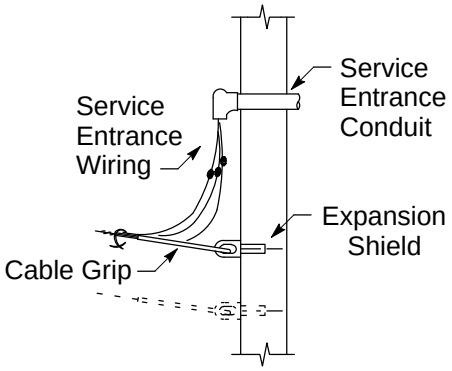

Figure 4-31
Service Drop Cable, 4/0 and Smaller, Triplex or Quadruplex

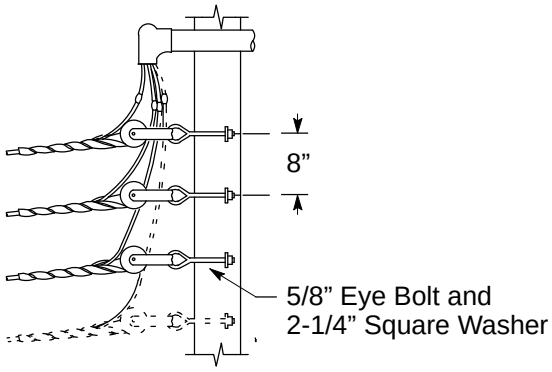

Figure 4-32
New Wall, 1/0 kcmil [1] to 397.5 kcmil Aluminum

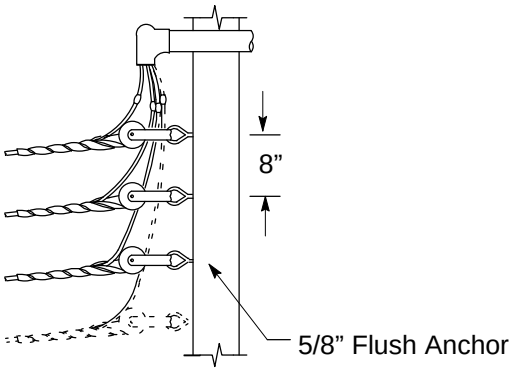

Figure 4-33
New or Existing Wall, 1/0 kcmil [1] to 397.5 kcmil Aluminum

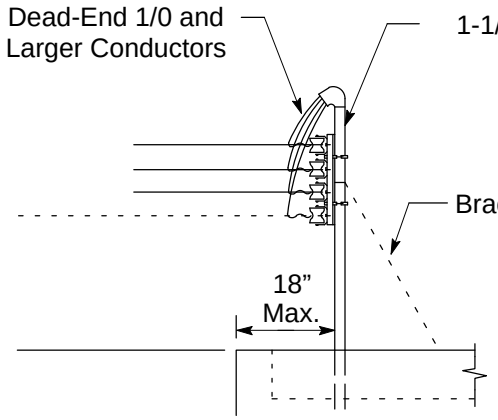

Figure 4-34
Open Wire Service, #4 to 397.5 kcmil [1] Aluminum

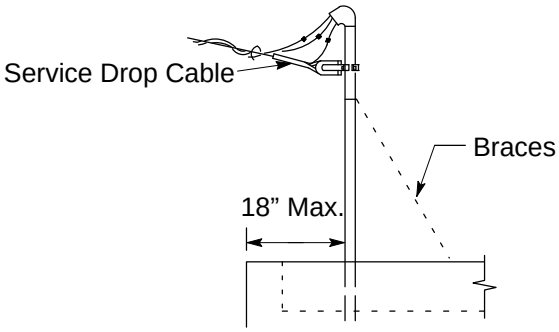

Figure 4-35
Service Drop Cable

Service to Nonresidential Premises

Notes in reference to Figure 4-32, Figure 4-33, and Figure 4-34.

1. kcmil: a thousand circular mils

4.5.3. Special Service Attachment Requirements: Areas Subject to Heavy Snow Loading

The following special requirements apply to service drops installed in snow-loading areas. PG&E has designed these requirements to minimize storm damage.

A. Applicants must ensure that the span length of triplex or quadruplex service drop cable used in snow-loading areas is 125 feet or less.

B. Applicants should locate the service weatherhead as high as practical to keep the weatherhead clear of deep snow.

C. Applicants should try to attach service drops to house gables, where practical. This type of attachment protects the service and meter equipment from being impacted by snow and ice as it slides off the roof.

D. PG&E will attach a service knob to a stud, if possible. PG&E will **not** mount the service knob directly to the roof or attach it to corner trim or roof trim. Figure 4-36, “Building Attachment − Service Knob,” Detail A, found on Page 4-20, provides the requirements for attaching service knobs.

E. Applicants should install a self-supported, periscope attachment structure according to the requirements specified in Subsection 4.6. on Page 4-21 and Table 4-4, “Maximum Distance ‘L’ (Inches From the Service Attachment to the Top Periscope Support),” found on Page 4-20.

Typically, periscope attachment structures that are installed as specified in Subsection 4.6. and Table 4-5, “Maximum Mast Height Above the Roof *Without* Bracing,” found on Page 4-22, will provide a sufficiently rigid service-drop support to withstand the expected snow loading. In areas above 3,000 feet, use the construction methods shown in Figure 4-36, where practical.

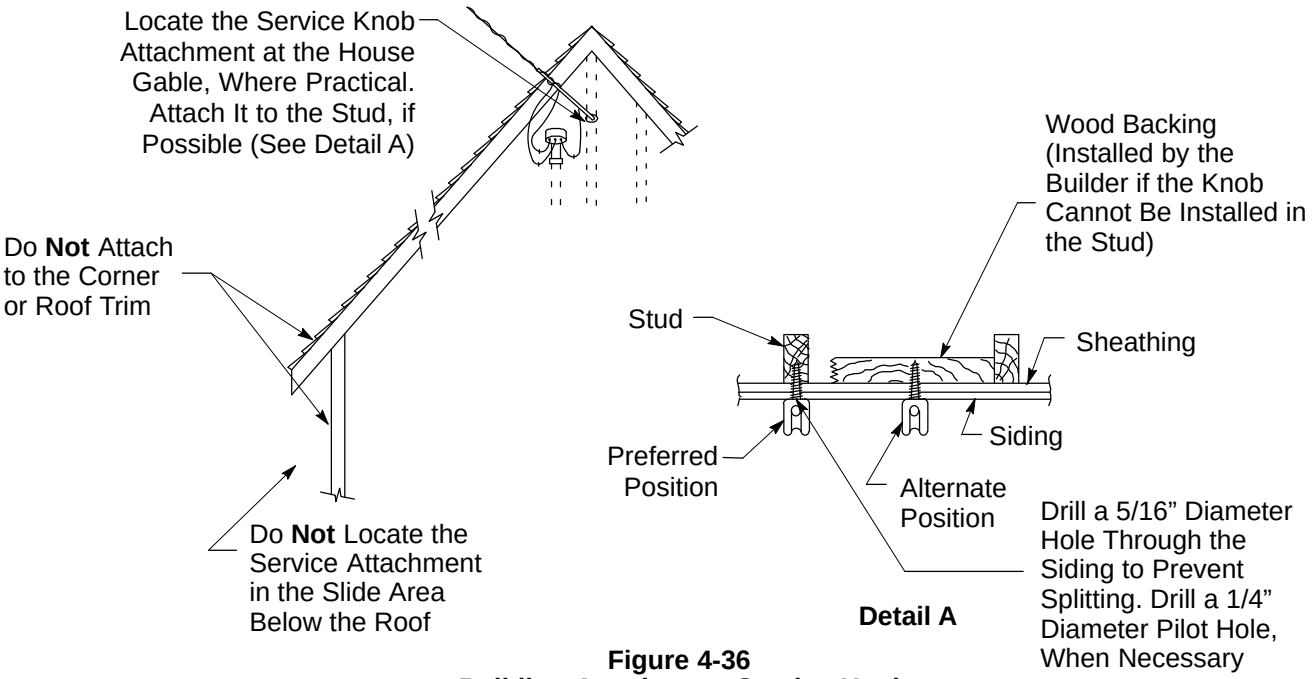

Figure 4-36
Building Attachment–Service Knob

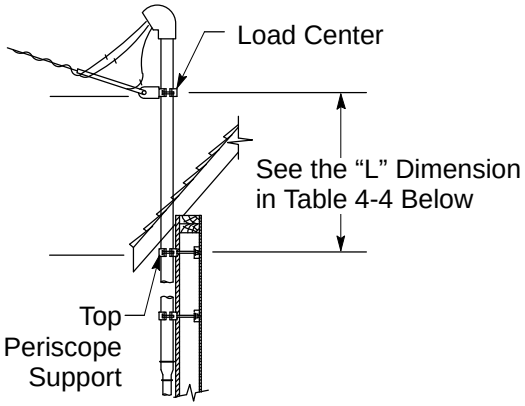

Figure 4-37
Self-Supported Periscope Attachment Structure

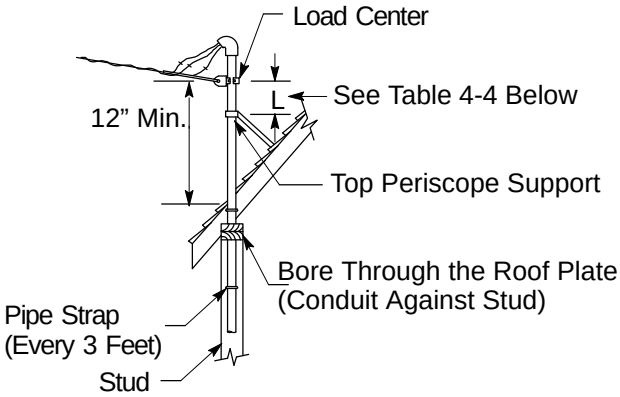

Figure 4-38
Braced Periscope Attachment Structure

Table 4-4 Maximum Distance "L" (Inches From the Service Attachment to the Top Periscope Support)

Type of Service Periscope	IPS Size of Service Periscope (In Inches)					
	1-1/4 [3]	1-1/2 [3]	2 [3]	2-1/2	3	4
GRS [1] or IMC [2]	5	7	11	22	36	57
Aluminum	Not Permitted		4	9 [3]	14	26

1 GRS: galvanized rigid steel
2 IMC: intermediate metal conduit
3 Brace the periscope as shown in Figure 4-38 to maintain a sufficient clearance over the roof.

4.6. Attachment Structures (Periscopes)

An attachment structure is a support that connects the service drop to the structure while maintaining the clearances required for the service drop. Applicants must ensure that the service drop maintains the required clearance at its point of attachment to the periscope, mast, or other attachment structure. These clearances are mandated by the CPUC's *G.O. 95*.

Applicants can connect service drops to attachment structures in either one of two ways.

A. Connect by using either spools or insulators that are installed on a building.

B. Connect by using a mast constructed of one of the following materials.

- Rigid, galvanized steel pipe or conduit
- Galvanized angle iron
- Wood
- Other suitable material

To provide structural support for periscopes, applicants should use a heavy-duty, 2-hole pipe strap every 3 feet, secured by 3/8-inch x 3-inch lag screws (minimum size). Structural support is required at the location shown in Figure 4-39, "Unbraced Periscope Structure (Residential and Nonresidential)," on Page 4-23.

When applicants must install attachment structures to maintain the required clearances, they must contact PG&E for approval **before** constructing the structures. PG&E must ensure that attachment structures meet all of the applicable legal requirements.

Applicants must install and maintain these attachment structures at their expense.

The attachment structures must be strong enough to support the service drop wires and service attachments. Applicants may use service-entrance conduit as attachment structures. In this case, the periscope must be a minimum 1-1/4-inch GRS conduit or IMC, or 2-inch IPS rigid aluminum conduit. Applicants may **not** use plastic conduit as an attachment structure. Subsection 4.5.3., "Special Service Attachment Requirements: Areas Subject to Heavy Snow Loading," on Page 4-19, provides applicants with additional requirements when using attachment structures in snow-loading areas.

When applicants use attachment structures, either on exterior walls or on roof structures, they must ensure the attachment structures provide the required clearances. Additionally, applicants must ensure that buildings are constructed or reinforced to support the weight of the attachment structure and fitting. Buildings must be able to withstand the pull of the service wires. Applicants must furnish all of the materials required to install the attachment structures **except** the racks, bolts, and insulators needed to secure the service wires. PG&E will supply those parts.

Applicants may **not** attach communications conductors, such as those used for telephone or cable television service, to the electric supply's power-service mast or attachment structure. Applicants can attach **only** electric-utility, power-supply, service-drop conductors to the electric-supply, power-service masts or attachment structures.

4.6.1. Periscope Clearances and Bracing Requirements

Applicants must ensure that periscopes and raceway-type service masts extend at least 12 inches above any roof or eave they may penetrate. Applicants may be required to raise periscopes and raceway-type service masts when using them as attachment structures and/or to obtain the appropriate clearances for service drop conductors. For more information, see Figure 4-13 through Figure 4-16, all found on Page 4-13. Also, see Figure 4-34, “Open Wire Service, #4 to 397.5 kcmil Aluminum,” and Figure 4-35, “Service Drop Cable,” found on Page 4-18. Finally, see Figure 4-36 through Figure 4-38, found on Page 4-20.

Applicants may have to brace periscopes that project above the roof lines, as shown in Figure 4-39 and Table 4-5. An acceptable method of bracing is illustrated in Figure 4-34 and Figure 4-35. Table 4-5 lists the maximum periscope heights that applicants can install **without bracing** for different types of conduit.

The periscope (i.e., mast) height without bracing is limited to 30 inches above the roof in either of the following two locations.

- Where the service drop is installed through trees.
- Where trees or tree branches may strike or cause unplanned loading on the service drop.

Applicants must ensure that unbraced periscopes projecting above roofs or eaves are continuous **without couplings** from the point where the utility service drop is attached to the periscope to 30 inches below the roof or eave. When the periscope structure requires support above the roof, applicants must ensure that it is braced, **not guyed**, as shown in Figure 4-38. The brace must be located as described in Table 4-4. When applicants need to brace periscope structures, the bracing must consist of two galvanized steel members installed at an approximate 90° spread. Braces must consist of a minimum 3/4-inch galvanized steel pipe or 1-1/4-inch x 1-1/4-inch x 1/8-inch galvanized steel angles.

Table 4-5 Maximum Mast Height Above the Roof *Without* Bracing[1]

(IPS) Conduit Size		Maximum Height *Without* Bracing
GRS [2] or IMC [3]	Aluminum	
All Measurements in Inches		
1-1/4	2	42
1-1/2	2-1/2	42
2	3	54
Larger	Larger	78

1 See Subsection 4.5.3. on Page 4-19 for snow-loading area requirements.
2 GRS: galvanized rigid steel
3 IMC: intermediate metal conduit

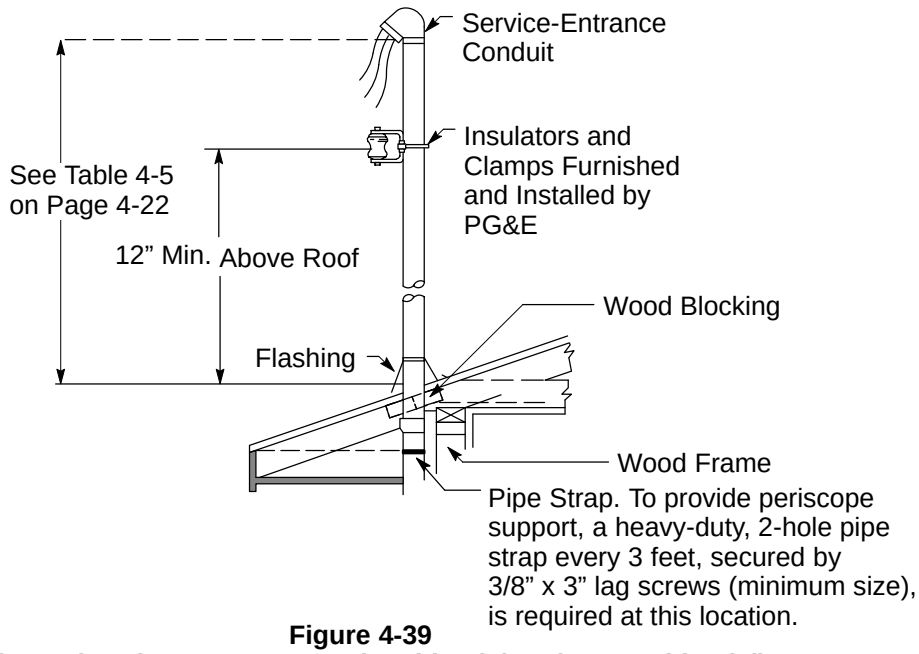

Figure 4-39
Unbraced Periscope Structure (Residential and Nonresidential)

4.7. Service Weatherheads

Typically, applicants should **not** locate the service weatherhead on exterior walls that are less than 2 feet from a common property line. The service weatherhead should be higher than the point of service attachment.

Applicable California state laws require applicants to locate the service weatherhead so that they maintain the minimum clearances specified in Subsection 4.4., “Service Drop Clearances,” found on Page 4-3, through Subsection 4.5., “Service Attachments,” found on Page 4-15. These minimum clearances also apply to the service drop and the open sites between the service weatherhead and the service drop’s point of attachment.

In some instances, applicants may need to install the service weatherhead and related open wires at an elevation greater than the minimum required clearances. Adding the extra height ensures that the installed service drops maintain the required clearances above the ground and any affected structures. Also the required clearances may be greater than local electrical codes.

A **service weatherhead** must be located **above** the service-drop conductor’s point of attachment; however, the **service-drop attachment** may be located **above** the service weatherhead if **both** of the following conditions are met.

A. If it is impractical to attach the service drop below the level of the service weatherhead.

B. If the attachment point on the service-drop conductor is located less than 24 inches from the service weatherhead.

Ensure that the length of the open-wire drip loop does **not** exceed 3 feet.

4.8. Service-Entrance Conductors

Applicants must furnish, install, and maintain the service-entrance wiring and service equipment beyond the point where it attaches to PG&E's overhead service drop.

The type and size of service-entrance wires must conform to applicable legal requirements and must be approved service-entrance cable. If applicants use an approved service-entrance cable, they must ensure that the service-entrance wires are enclosed either in continuous metallic tubing or in rigid conduit of a type and size to conform to applicable requirements, but preferably 1-1/4 inches or more.

NOTE: On periscope-type installations, use a minimum 1-1/4-inch GRS or IMC, or 2-inch IPS, rigid aluminum conduit.

If applicants use SE-type service-entrance cables between the service weatherhead and meters, they must ensure that the SE-type cables are **not** concealed. Also, applicants must ensure that service entrances are rain tight by using approved fittings.

In residential and small commercial installations, applicants may install short-radius conduit fittings (i.e., LBs, service elbows) in the overhead, service-entrance conduit system.

Because this conduit system penetrates the outer building wall, applicants must install the short-radius conduit fittings with covers that prevent water from penetrating the fittings. The covers also must be sealable by PG&E personnel.

NOTE: Short-radius conduit fittings should **not** contain splices or taps.

The drip loop is the length of exposed wire between the service weatherhead and the service drop. Applicants must **not** use more than 3 feet of exposed, open wiring to form the drip loop.

To create drip loops, an applicant should install a minimum 18 inches of service-entrance wiring that extends out from the service weatherhead. In cases where the service-entrance open conductors pass over a roof or firewall with a minimum clearance of 12 inches, applicants must provide enough wire for PG&E to connect to the service drop and to obtain the required 12-inch minimum clearance above the building.

PG&E will connect the Company's service conductors and the applicants' service-entrance conductors below the weatherhead.

PG&E will furnish and install connectors for joining the service-entrance conductors to the service drop. Drip loops must **not** extend around the corner of a building; however, the service weatherhead may be located on the same face of the building as the service-drop attachment. The service-entrance conduit or cable may be extended around the corner of the building to the meter and service switch.

Do **not** install conductors other than service-entrance conductors in the conduit leading to the meter.

4.9. Applicant-Owned, Installed, or Furnished Wood Poles

PG&E project coordinators will explain the requirements of Electric T&D Engineering & Technical Support Bulletin 2004-08, “Inspection of Customer/Contractor Provided Poles,” (filed as “For Reference Only”) to ensure that applicants are familiar with the requirements for installing and using the wood poles.

For poles that will have a final height greater than 20 feet above ground level, the Federal Aviation Administration (FAA) may require the applicant to file a notice a minimum of 45 days before installing the pole. The FAA may issue a determination of hazard to air navigation and recommend actions to mitigate or eliminate the hazard. Please contact your PG&E project coordinator for additional information.

After meeting with project coordinators and finalizing their installation plans, applicants must notify their local PG&E project coordinators **before setting** wood poles. It is critical that applicants who own, install, or furnish approved wood poles to which PG&E can attach equipment or facilities, or to which PG&E can furnish or supply permanent electric service, meet the requirements of Numbered Document 025055, found in Appendix C. PG&E field inspectors will approve the installation of poles that meet Company requirements.

PG&E field inspectors verify the following, specific requirements for applicant-furnished poles before approving their installation.

A. The poles must be supplied and treated by a PG&E-approved supplier.

B. The applicant must obtain and provide PG&E with a copy of a “Certificate of Treatment” from the pole supplier. That certificate must indicate that the pole was treated according to the requirements of both the American Wood Preserver’s Association and the American National Standards Institute (ANSI).

C. Applicants must ensure that new poles are branded or tagged. This identification must be either 10 feet from the pole butt for poles less than 55 feet long or 14 feet from the pole butt for poles more than 55 feet long. The brand must include the following four identifiers.

- The manufacturer’s name
- The month and year the pole was treated
- The wood species
- The preservative used to treat the pole

D. Poles greater than 40 feet long that will support PG&E primary facilities must be through-bored at the ground line.

E. PG&E must inspect and approve used poles **before** they are reused (i.e., PG&E facilities are reinstalled on the poles). PG&E-owned poles that have been removed from service and will no longer be used by PG&E cannot be reused as customer-owned poles. The PG&E field inspector must verify that the poles meet the dimensional and test requirements for reused poles. These requirements are described in PG&E Procedure TD-2325P-01, “Wood Poles −Testing, Reinforcing, and Reusing.”

If installing **overhead temporary services,** refer to Numbered Document 025055, “Requirements for Customer-Owned Poles,” found in Appendix C.

4.10. Required Vegetation Clearances

The state of California requires electric utilities to keep electric lines (i.e., high-voltage lines) cleared of vegetation. All newly constructed distribution lines and existing lines must meet these requirements.

NOTE: PG&E may determine that the distribution line should be installed underground, or that trees should be removed, if the planned line extension does **not** meet the clearance requirements between existing trees and overhead electric lines. See new options for commercial agricultural orchards in Subsection 4.10.5. on Page 4-30.

4.10.1. General Requirements

When establishing new overhead services, and/or when building or remodeling structures near high-voltage lines, poles, or towers, applicants must research planting regulations and follow the rules established here.

NOTE: Applicants must consider safety and access for repairs when planting near an overhead electric service.

A. Where required, applicants must establish clearances as described in California Public Resource Code (PRC) 4292. PG&E can exempt applicants if the vegetation around power poles at the completed construction site will be well irrigated, low growing, and not highly flammable. In general, do **not** plant trees near power poles or towers.

B. For electric **distribution,** high-voltage lines rated up to 60,000 volts, applicants must establish a 15-foot "low-growth" zone on both sides of all new lines. Also applicants must **not** plant trees that exceed 25 feet in height at maturity under or within 15 feet of **distribution** power poles. The zone under the electric power lines should be a low-growth, tree-planting zone and/or a shrub- and flower-planting zone. PG&E recommends planting shrubs and flowers in low-growth zones to ensure compliance. Figure 4-40, "Illustration of 15-Foot Clearance, Low-Growth Zone," and Figure 4-41, "Grass and Shrubs Recommended Under Service Wires," both on Page 4-27, illustrate low-growth zones and show how the 15-foot clearance is measured from the center of the pole.

C. For all electric **transmission**, high-voltage lines rated greater than 60,000 volts, applicants must **not** plant trees within the right-of-way easement of the **transmission** poles or towers. Applicants must follow a "no-growth" zone inside rights-of-way areas, including under the electric power lines. The zone outside the rights-of-way areas is a "low-growth" zone, tree-planting zone, and/or a shrub-and-flower planting zone. Figure 4-42, "Grass and Shrubs Recommended Under Transmission Wires," on Page 4-27, illustrates a no-growth zone.

D. Applicants must ensure that a thorough inspection is made of proposed construction areas. Dead, dying, diseased, or hazard trees tall enough to fall into the proposed power lines must be removed. Hazard trees are defined as any tree having a structural defect that may cause the tree, or a portion of the tree, to fall either on someone or on something of value.

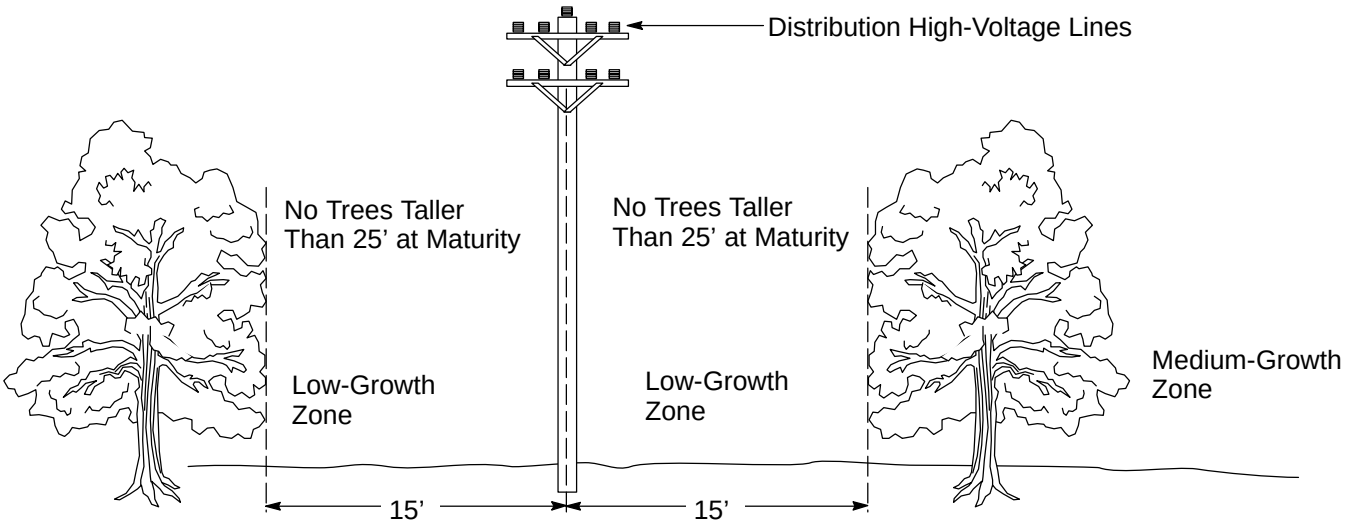

Figure 4-40
Illustration of 15-Foot Clearance, Low-Growth Zone

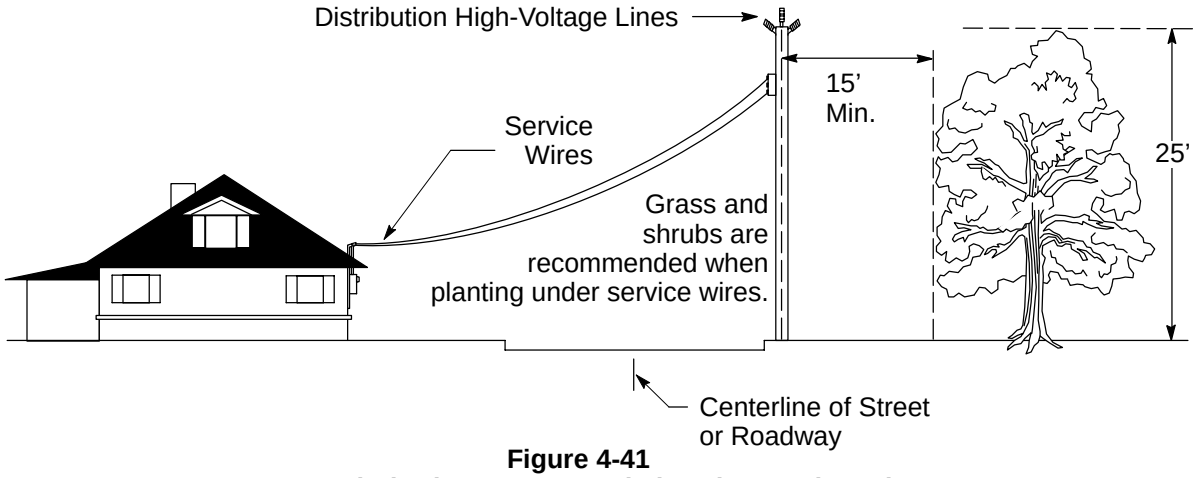

Figure 4-41
Grass and Shrubs Recommended Under Service Wires

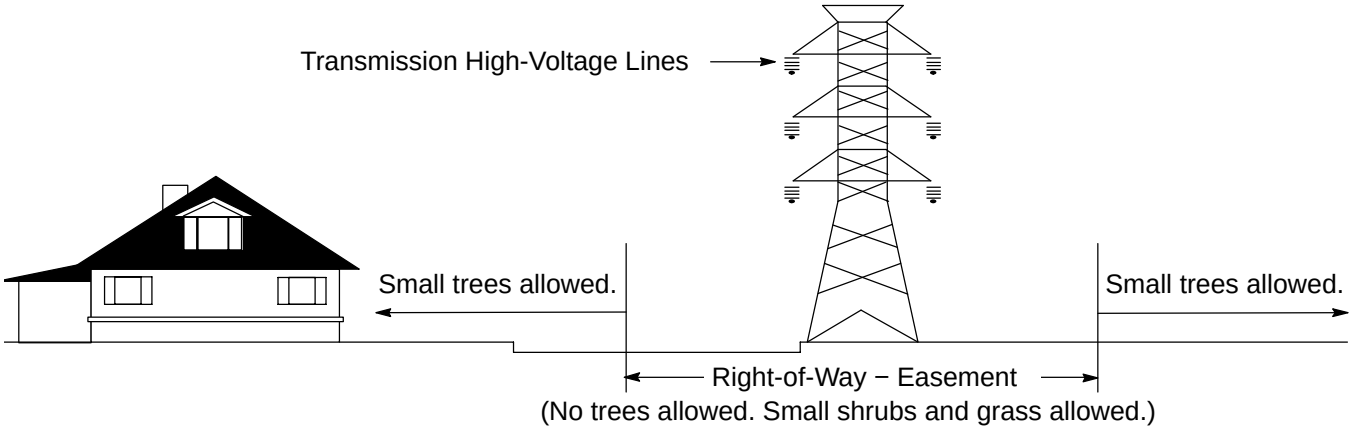

Figure 4-42
Grass and Shrubs Recommended Under Transmission Wires

E. Applicants can contact PG&E's vegetation management personnel to obtain more information about codes or regulations and to schedule field inspections for construction sites. Vegetation management personnel perform field inspections to identify clearance requirements or hazard trees.

4.10.2. Planning Requirements

When planning and routing high-voltage overhead electric lines, applicants must avoid areas with heavy tree growth. See the tree-planting matrix tables (Tables B-1 through B-7 starting on Page B-2) in Appendix B. Building plans should indicate where overhead lines pass within the boundaries of the construction and landscape areas, as shown Figure 4-43, "Alternative Routes to a House Showing High-Voltage Lines and Tree-Clearance Zones," below, and Figure 4-44, "Development Area," on Page 4-29.

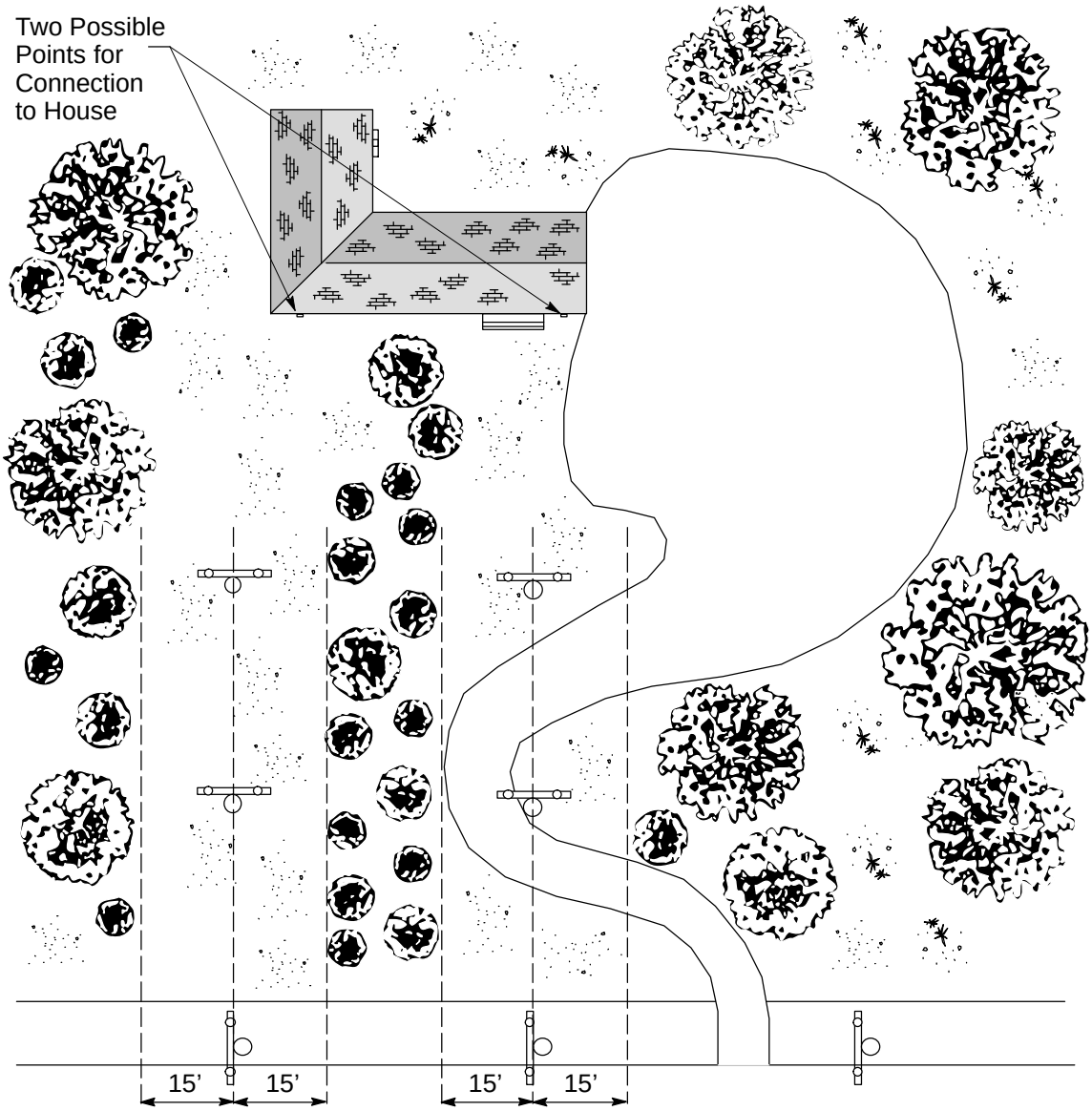

Figure 4-43
Alternative Routes to a House Showing High-Voltage Lines and Tree-Clearance Zones

4.10.3. Existing Overhead Lines Adjacent to Developments

Most new developments are designed to ensure that power lines are built underground. However, one or more sides of the construction area may be bordered by existing power lines. When planning landscape improvements, applicants must plant only lower-growing tree species under and near overhead electric lines.

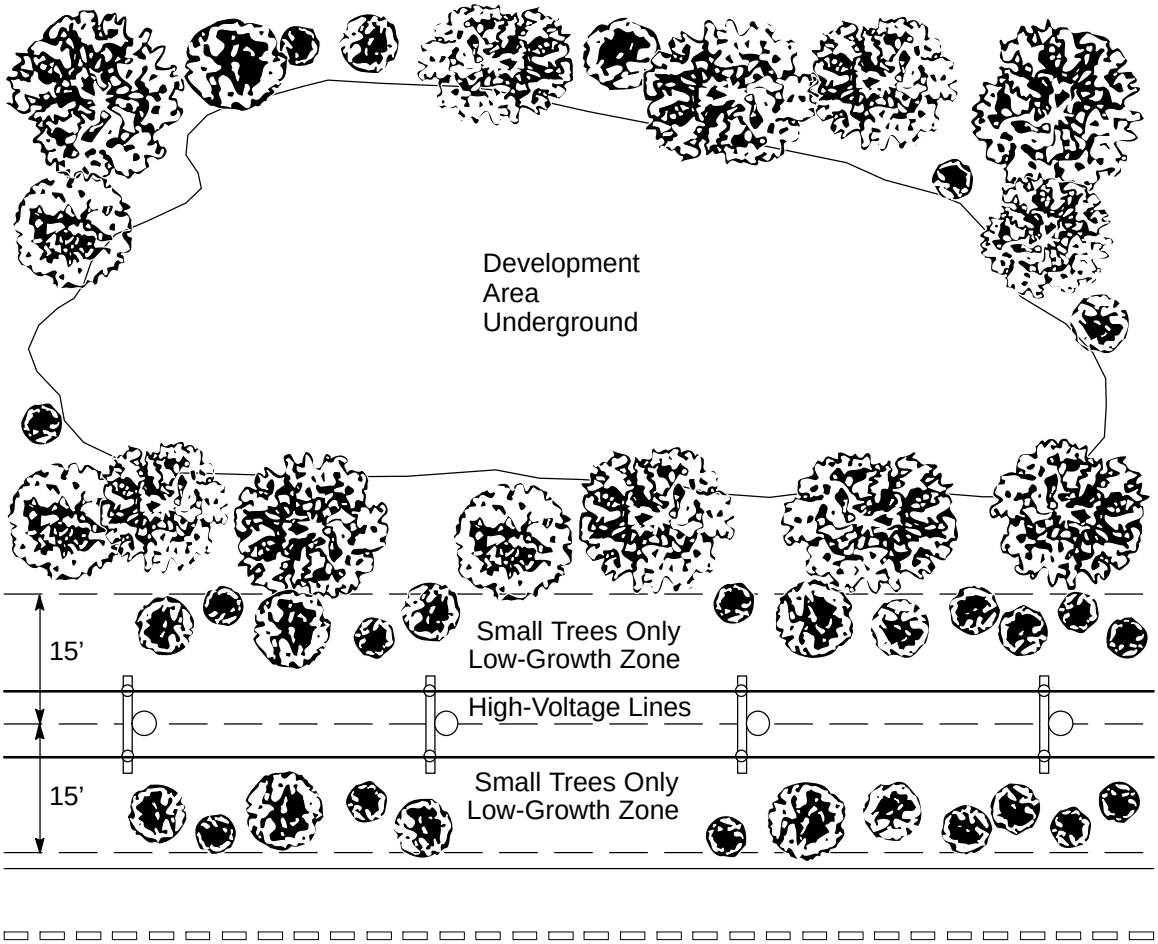

Figure 4-44
Development Area

4.10.4. Line Extensions

Line extensions must be constructed with a 15-foot clearance on either side of high-voltage power poles. Applicants must clear the area from one end of the line extension to the final connection point before construction on the line extension begins. Figure 4-43 on Page 4-28 illustrates an approved method for clearing affected areas. Also, any hazard trees identified during the PG&E inspection that are located outside of the 15-foot clearance zone on either side of the power poles should be removed before construction begins on the line extension. PG&E will **not** connect new lines to the existing distribution system until the applicant provides adequate clearance from the trees.

4.10.5. Primary Overhead Distribution Poles in Commercial Orchard Installations

When planning and routing high-voltage, overhead electric lines within a commercial orchard, agricultural customers may request the installation of taller poles than normally would be installed to eliminate or minimize PG&E's need for future vegetation pruning. The applicant may be required to make a nonrefundable, one-time payment for the additional cost of installing taller poles. Contact the PG&E project coordinator for more information. In addition, applicants should work with the PG&E project coordinator to choose a route for the overhead distribution facilities that does not conflict with the orchard trees and eliminates the need for future vegetation pruning.

When planting near overhead electrical service drops, applicants also must consider safety and access to the electric facilities when irrigation pumps and other electrical loads require repair.

4.10.6. Removing Vegetation Near Existing, High-Voltage, Energized Lines

CAUTION

Because safety is the Company's highest priority, PG&E recommends that all vehicles, equipment, tools, and people maintain a minimum 10-foot distance from all high-voltage power lines. Refer to Section 1, "General," Table 1-2, "Minimum Safe Working Distances (Scaffolds, Equipment, Tools, Structures, and People)," and Table 1-3, "Minimum Safe Working Distances (Boom-Type Lifting or Hoisting Equipment)," both on Page 1-9, for the minimum safe working distances.

Applicants or unqualified tree-trimming contractors should **never** attempt to trim or remove trees that are within 10 feet of high-voltage power lines (i.e., conductors).

If it is necessary to trim or remove trees located within 10 feet of a high-voltage power line, applicants **must** notify PG&E at **1-800-743-5000**.

Generally, high-voltage power lines are any overhead lines that connect from pole to pole. These lines typically are 600 volts and greater. Post a "HIGH VOLTAGE" sign on the poles or crossarms, as shown in Figure 4-45, "High-Voltage Marker on Poles and Crossarms," on Page 4-31. However, applicants should contact PG&E for assistance if a line's voltage is unknown, and should **always assume that lines are high voltage**.

During PG&E's normal tree-trimming schedule, contractors qualified to perform high-voltage line clearances will prune or remove trees at no cost to applicants to create a safe distance between the vegetation and high-voltage power lines.

If it is necessary to trim a tree that is closer than 10 feet from an overhead power line **before** PG&E's normal tree-trimming schedule, applicants may hire a contractor qualified to perform high-voltage line clearances to prune the tree to a safe distance away from the electric lines. Again, unqualified persons should **not** perform this job. Applicants should contact PG&E to obtain the tree-trimming schedules for their areas.

There are regulations and statutes that dictate the requirements for working around high-voltage power lines. The California Occupational Safety and Health Administration (Cal/OSHA) requires that persons working within certain distances of overhead power lines be qualified and trained properly. For details, see the *California Code of Regulations*, Title 8, Division 1, Chapter 4, Subchapter 5, Group 2, "High-Voltage Electrical Safety Orders," Article 37, "Provisions for Preventing Accidents Due to Proximity to Overhead Lines," and Article 38, "Line Clearance Tree Trimming Operations."

In addition, the California Penal Code makes it a **crime for any person to work within 6 feet of a high-voltage power line**. For details and additional information about this misdemeanor, see the California Penal Code, Part 1, Title 10, Section 385(b).

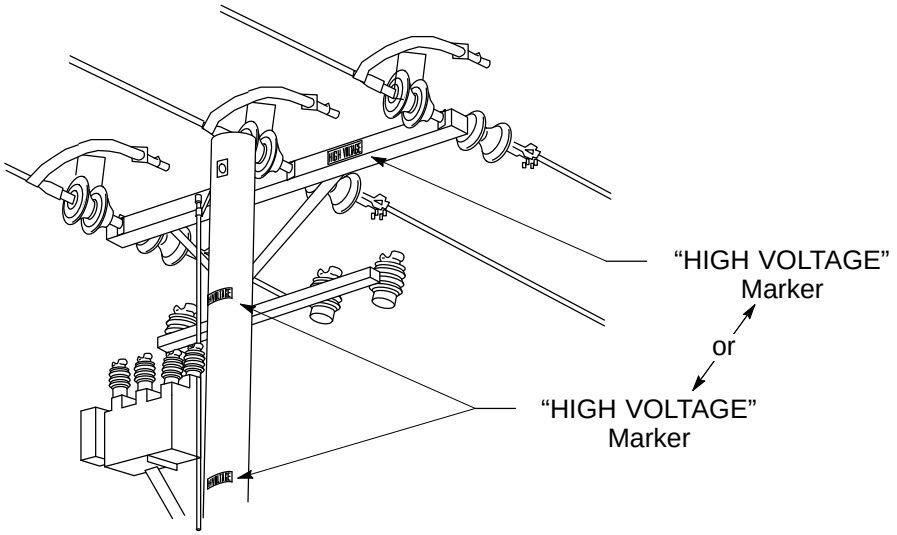

Figure 4-45
High-Voltage Marker on Poles and Crossarms

For PG&E-recommended and PG&E-prohibited trees, see the the tree-planting matrix tables (Table B-1 through Table B-7 starting on Page B-2) in Appendix B,

This Page Intentionally Left Blank

Section 5
Electric Metering: General

SECTION 5 ELECTRIC METERING: GENERAL

Section 5
Electric Metering: General

5.1. Scope

This section of the manual is designed to help applicants, engineers, and contractors plan acceptable electric metering installations for the electric service supplied by Pacific Gas and Electric Company (PG&E/Company). The information and requirements described are applicable to Section 6 through Section 11.

For help with determining the service rating of customer equipment see Subsection 1.14. located on Page 1-11.

5.2. General Conditions and Responsibilities

5.2.1. Approved Metering and Service Termination Equipment

All service termination and metering equipment must conform to nationally recognized standards and meet all applicable certification requirements. Nationally recognized standard organizations include, but are not limited to, the following: National Fire Protection Association (NFPA), National Electrical Code (NEC), National Electrical Manufacturers Association (NEMA), Underwriters Laboratories (UL), or Occupational Safety & Health Administration's (OSHA's) Nationally Recognized Testing Laboratory (NRTL) Program. The equipment also must meet the requirements specified in the Electric Utility Service Equipment Requirements Committee (EUSERC) manual and be approved by PG&E for use in construction projects.

NOTE: Employees perform an onsite field inspection of the equipment and installation and provide final approval only after ensuring that all of the specified requirements have been met.

5.2.2. Drawing Submittal Requirements for Metering and Service Termination Equipment

Applicants must meet the requirements in Item A. through Item D., below and on Page 5-2, when installing electric metering and service termination equipment. This applies to residential and nonresidential applications and includes meter panels, pedestals, panelboards, and switchboards that are wall-mounted, pad-mounted, pole-mounted, or on panel board construction.

A. Submit drawings for equipment with current ratings of 320 amperes (amps) or above to PG&E in triplicate (i.e., either paper copies or electronically) for review and pre-approval by the local meter shop personnel or meter specialist.

B. Also, submit drawings for newly designed metering equipment or for equipment that has been modified from existing designs as shown in the *Greenbook* or EUSERC manuals. This applies to metering equipment of any current rating. Drawings must be sent to the Meter Engineering Department for review. The review process could take 6 months or longer.

C. Ensure that submittals contain specific references from either the EUSERC manual, this *Electric and Gas Service Requirements* (*Greenbook*) manual, or both. When using *Greenbook* references, include the applicable subsection(s), figure(s), and page number(s). For EUSERC references, use the drawing and sheet numbers.

D. Ensure that submittals contain specific references for each component or section included with the equipment. Provide a detailed summary of the specification information in the beginning of the submittal, as well as on all equipment figure drawings in the submittal.

5.2.3. Applicant Responsibilities

The applicant must provide, install, own, and maintain the following equipment and structures listed in Item 5.2.3.A. through Item 5.2.3.G., starting below.

A. All meter sockets and enclosures, metering transformer cabinets, and switchboard service sections intended for utility use, unless PG&E permits a specific exception.

B. Use only ring-type meter sockets, enclosures, switchboards, and other metering equipment approved both by PG&E and EUSERC.

C. For Overhead Service: Service entrance conductors, conduit, and a weatherhead to the point of attachment to PG&E's overhead service conductors.

D. For Current-Transformer Panels and Switchboards: Lugs, an underground service-termination pull box, and a separate current-transformer cabinet and meter box.

E. **Indoor Meter Panels**

1. **All Meter Panels**: Individual, residential, or nonresidential applicants with a meter panel rating of **any size**, installed inside a meter room or inside a building or other type of structure, must follow all of the requirements described below.

   a. Install, own, and maintain a separate, nominal, **2-inch** diameter conduit with pull tape inside. The conduit and pull tape must extend from the meter panel or switchboard and terminate in a NEMA 3R, 6-inch x 6-inch x 6-inch enclosure located 8 feet to 10 feet above grade on the outside surface of the building.

   b. Follow the applicable requirements in PG&E Bulletin TD-7001B-005, "SmartMeter™ Electric Network Requirements for Indoor Meter Rooms and High-Rise Building Construction," located in Appendix B.

c. Do not use the conduit. The conduit is for PG&E's metering equipment only. See additional requirements in Item 5.2.3.G. below.

2. **Meter Panels 200 Kilowatts (kW) or Greater*:*** Individual, nonresidential applicants with a meter-panel rating of 200 kW or greater, installed inside of a meter room, building, or some other structure, must install, own, and maintain **two separate conduits** with pull tape inside each, as described below.

   a. A nominal, **1/2-inch** diameter conduit extending from the telephone-service location and terminating in the meter section of the electric panel.

   b. A nominal, **2-inch** diameter conduit as described in Item 5.2.3.E.1. on Page 5-2.

   NOTE: A 200 kW minimum, 3-phase (Ø) meter panel is defined as one of the following:

   - 277/480 volts, 4-wire wye, and minimum 400 amps
   - 120/208 volts, 4-wire wye, and minimum 600 amps
   - 120/240 volts, 3-wire delta, and minimum 600 amps
   - 120/240 volts, 4-wire delta, and minimum 600 amps

F. **Outdoor Meter Panels**

Individual, nonresidential applicants with a meter panel rating of **200 kW or greater** must install, own, and maintain a separate, nominal, **1/2-inch** diameter conduit with pull tape inside. The conduit and pull tape must extend from the telephone service location and terminate in the meter section of the electric panel.

EXCEPTION: Approved meter−panel locations that have adequate wireless radio frequency (RF) signal capabilities may be exempted from installing the 1/2-inch phone line conduit. To request a variance, customers must submit switchboard and meter-panel drawings with the jobsite address to their local project coordinator early in the service application process. The project coordinator submits this information to the local meter shop, enabling meter shop employees to make a field determination as to whether or not the conduit should be required. Without an exemption from the meter shop, the 1/2-inch conduit is required and must be installed. This exception applies only to outdoor meter panels rated up to 600 volts.

G. Conduit installed in the ground, floors, ceilings, walls, or concrete must be made of rigid steel. In any other installation location, the conduit type can be electrical metallic tubing (EMT) or better. For underground installations, the conduit must exit the pad on the outside of the switchgear…**not** inside the switchgear. See Figure 5-5, "Preferred Location of Conduits for Indoor and Outdoor Meter Panels and Switchboards," on Page 5-13.

H. For recommendations on the best locations for equipment, ask your project coordinator to **contact PG&E's electric metering department**. Questions may include the prime location for a phone interface box, the required point for conduit to exit the meter room or building, or your options in a remote location when a telephone line is unavailable.

I. Transformers rated at 120/240 volts, three-phase, 4-wire, with delta-connected service installed, must have the "high leg" (e.g., power leg, stinger leg) conductor located either in the center phase or on the right phase position. This conductor usually is designated as the "C" phase for metering purposes. Mark (i.e., identify) the conductor (e.g., high leg, power leg, stinger leg) properly. The color orange is typically used for this purpose.
On all self-contained services, the power leg must be located in the far-right phase position, usually designated as the "C" phase. Mark (i.e., identify) the conductor (e.g., high leg, power leg, stinger leg) properly. The color orange is typically used for this purpose.

J. Applicant wiring that extends from the distribution section (i.e., branch circuits) must **not** pass through any PG&E-sealed section.

K. Single-metered applicants with single-phase services above 400 amps should consider installing a switchboard as described in Section 10, "Electric Switchboards: 0 Volts Through 600 Volts."

5.2.4. PG&E's Responsibilities

PG&E provides, installs, owns, and maintains all meters and metering transformers for full-service applicants. For direct access applicants, refer to *Direct Access Standards for Metering and Meter Data (DASMMD) in California* (March 1999).

5.3. Electric Meters: General Location Requirements

To determine the most satisfactory meter location and to ensure that adequate space is provided for the meter, consult a PG&E project coordinator in the project's preliminary planning stage. All equipment clearance and working space requirements must be met.

When an electric panel is being relocated or replaced, and PG&E's existing service conductor will be used, as determined by PG&E, the panel must be positioned so the service conductor can be reconnected properly. The existing service conductor must be able to be reconnected to the underground electric panel termination lugs or the external service-entrance conductors coming out of the weatherhead for overhead services. If PG&E needs to install additional service conductors or cables to perform the reconnect, the work and material would be at the applicant's expense. PG&E **does not accept** cable-termination techniques using pin adaptors, cable ringing, or splicing on additional cable.

The local PG&E meter shop must approve remote meter locations before applicants locate meters away from (i.e., remote from) termination enclosures. Applicants must submit a drawing that shows the distance (in feet) and the accessible path to the remote meter location. Also, describe the size and type of conduit used to attach to the remote meter.

See Figure 6-5, “Typical Underground, Separate-Bused, Current-Transformer Cabinet and Safety-Socket Meter Box Assembly, 201 Amps−400 Amps, 3∅ and 201 Amps−800 Amps, 1∅,” on Page 6-8, as an example of remote metering.

Applicants can avoid the time and expense of installing additional facilities or relocating existing facilities by consulting with PG&E early in the process.

5.3.1. Basic Meter Location Requirements

The following five lettered items explain PG&E’s basic meter location requirements and are subject to PG&E’s review and approval to ensure compliance. Applicants must ensure that:

A. Locations have at least one clear and unobstructed path or entrance providing access to the working space.

B. Nonportable illumination is provided for the working spaces around meters, metering-related equipment, and associated facilities when meters are located indoors. Also, applicants must provide a hallway or aisle leading to the meter(s) and metering equipment.

C. Locations in elevated areas (e.g., balconies or mezzanines) or in depressed areas (e.g., basements, cellars, or underground rooms) must be accessible by either a ramp or clear stairway that conforms to building-code requirements.

D. PG&E has provided advanced approval when potential locations are not in conflict with prohibited meter locations and are on walkways, alleys, or driveways that provide access to commercial or industrial property. PG&E may grant exceptions if other suitable locations are not available.

E. PG&E personnel have full access to inspect, read, or test metering facilities, whether the facilities are located indoors or outdoors. Applicants must ensure that all metering and service facilities are accessible and free of obstacles at all times when the metering equipment is energized. Applicants must maintain these accesses both **during** and **after** landscaping activities, fence installations, building construction, building renovation, remodeling activities, etc.

5.3.2. Prohibited Meter and Service Equipment Locations

The following locations are **not** acceptable for electric meters and service termination equipment.

A. Locations deemed hazardous to either personnel or equipment, or locations found to be unsuitable for entry. These locations include:

1. Inside any residence.
2. Directly over any stairway, ramp, or steps.
3. Any area where personnel may contact either exposed, high-voltage conductors or equipment in motion.
4. Any area that is accessible only through a trapdoor.
5. Any elevator shaft.

6. Any doorway, hatchway, or drive-through pathway designed for picking up goods through a window, where opening the meter panel will block the through-area.
7. Areas where entry may be restricted or controlled because of medical, health, environmental, or other safety-related issues.
8. Any exterior bedroom wall or bedroom closets. These locations are unsuitable because of electronic noise concerns.

   EXCEPTION:

   An exception to this requirement that allows a meter at these locations requires sound isolation construction on the wall area behind the meter panel. The sound isolation construction must have a minimum Sound Transmission Class (STC) rating of 60. The sound isolation wall must extend 12 inches past all four sides of the meter panel. The applicant must submit drawings showing the construction method and materials to be used, as well as the minimum STC rating that will be achieved after completion, to both the local PG&E project coordinator and inspection department.
9. Any area in close proximity to a lake or water area. These locations are unsuitable when the meter faces the water.

B. Underground vaults or enclosures.

C. Areas where vibration, moisture, excessive temperature, fumes, or dust may damage the meter or interfere with its operation.

D. Areas within or requiring access through any restroom, bathroom, shower, powder room, toilet, or private-type room.

E. Portions of buildings where landscaping, fencing, or other construction activities will make the meter inaccessible.

F. Inside garages for single-family residences.

G. In a metallic cabinet (including doors), room, enclosure, or location that blocks or interferes with the radio frequency signal transmissions that are necessary for PG&E to operate its SmartMeter™ Advanced Meter Reading system. This applies only to meter panels that meet all of the following criteria.

   - Single metered
   - Less than 400 amps continuous rating
   - Wall mounted

H. In a room, utility closet, or area where metering facilities or termination enclosures are less than 3 feet away from any water source such as pipes, valves, fire sprinklers or equipment, or other wet facility.

5.3.3. Locating and Grouping Multiple Meters

When it is practical, PG&E will supply two or more meters from one service and will group the meters at one location Also, see Section 2, "Gas Service," Subsection 2.3.5., "Multiple Buildings Located on One Lot," on Page 2-14, and Section 3, "Electric Service: Underground," Subsection 3.2.5., "Installing Overhead and Underground Service for Two or More Buildings on One Lot," on Page 3-4.

5.3.4. Electric Meter Rooms

Applicants must ensure that meter rooms meet the following requirements.

NOTE: Meter rooms may be used for communications equipment.

A. Meter room specifications must be approved during the initial stages of construction. Submit drawings to your local project coordinator for the planner's review and for review by the local meter shop.

B. Designs must include a designated room for electric service, meters, and metering equipment.

C. Meter rooms must be clear of obstructions and located inside of buildings on the ground floor or below the ground floor. High-rise buildings can have meter rooms above the ground floor.

D. Meter rooms must have a doorway that opens 90 degrees or more to the outside of the building or into an area that is available to the public.

E. Meter rooms must have a clear and safe working space as described in Subsection 5.4.4., "Working Space," on Page 5-11, and Subsection 5.4.5., "Barricades," on Page 5-14.

F. Meter rooms must **not** include gas meters.

G. Meter rooms may be locked if the applicant provides PG&E with independent access to the room. Consequently, the meter room must be locked in one of the following ways.

   1. Using a double-lock arrangement, provided by the applicant, with one lock for the applicant and one lock for PG&E.

   2. Using an acceptably located key box, provided and installed by PG&E, to hold the applicant's key.

H. Meter rooms must be identified by appropriately marking the doors or doorways as described in Subsection 5.5.1., "Properly Identifying and Marking Meters," on Page 5-14.

I. Meter rooms must have conduit(s) and pull tape installed as described in Subsection 5.2.1, "Applicant Responsibilities," on Page 5-1 through Page 5-3.

J. Designed and constructed with a means to adequately discharge any excess water that may enter the room from the conduit system.

5.4. Meter Heights, Clearances, Enclosures, and Protection

5.4.1. Meter Heights

A. Pole-, Pad-, and Wall-Mounted Meters

When installing meter enclosures on a pole, on a wall, or on a pad-mounted structure, applicants must ensure that the meters meet the following requirements, except when installing metering equipment on poles for communication services. In that situation, follow the requirements in 5.4.1.B. on Page 5-8. All metering and service-termination facility installations are subject to PG&E review and approval. The meter height must be measured to the horizontal centerline of the meter axis.

1. **PG&E's preferred meter height is 66 inches** for all individual service-termination and meter-panel installations. All electric meters must be located 75 inches maximum above the ground or standing surface. The minimum meter heights are listed below.
   - Meters installed in self-contained panels rated up to 320 amps must be a minimum of 48 inches.
   - Meters installed in outdoor transformer-rated panels 400 amps and above must be a minimum of 60 inches. This applies to wall-mounted and panel board construction.
2. When meters either are enclosed in a cabinet or installed indoors in a meter room, the **maximum** meter height is the same as for outdoor installations, or 75 inches. The **minimum** meter height must be 36 inches as measured from the ground or standing surface to the centerline of the meter.
3. For switchboard service with a current transformer (CT) compartment, the maximum meter height is 72-1/2 inches, as illustrated in Section 10, Figure 10-24, "Standard Switchboard Service Section With CT Compartment and Filler Panel, 0 Volts Through 600 Volts," on Page 10-34. This applies both to indoor and outdoor installations.
4. In locations where snow accumulates, PG&E may require the minimum installed meter height to be increased. Specific meter-height requirements depend on the meter's location. Ask your local PG&E project coordinator to consult the electric meter department for specific meter-height requirements in snow-accumulation areas.

B. Pole-Mounted Communication Service and Meter Equipment

Applicants must ensure that communication service and meter equipment installed on PG&E or joint poles is placed so the bottom of the enclosure is a minimum of 7 feet to a maximum of 8 feet from the finished grade. If it is not possible to meet the height requirements, install a meter pedestal. Ask your PG&E project coordinator for Numbered Document 027911,"Installation Details for Service to Pole-Mounted Communication Equipment," for specific requirements.

5.4.2. Meter Cabinet Enclosure Clearances

Applicants must ensure that meter cabinet enclosures are large enough to provide easy access to the meter and have an adequate working space for maintaining the meter. The cabinet requires a side-hinged door that can be latched open at 90° or more. Also, the enclosure and service equipment must comply with local code requirements. Detailed dimensional requirements are shown in Figure 5-1, “Meter Cabinet Enclosure Clearances,” and Table 5-1, “Meter Cabinet Enclosure Clearance Dimensions,” both located on Page 5-9.

Applicants also must ensure that meter cabinet enclosures are maintained and work properly. In corrosive areas a fiberglass enclosure is recommended to help prevent deterioration of the metallic equipment.

Finally, applicants must ensure that when a cabinet enclosure is pad-mounted, a 3-foot clearance is maintained between the edge of the pad and the base of the pole.

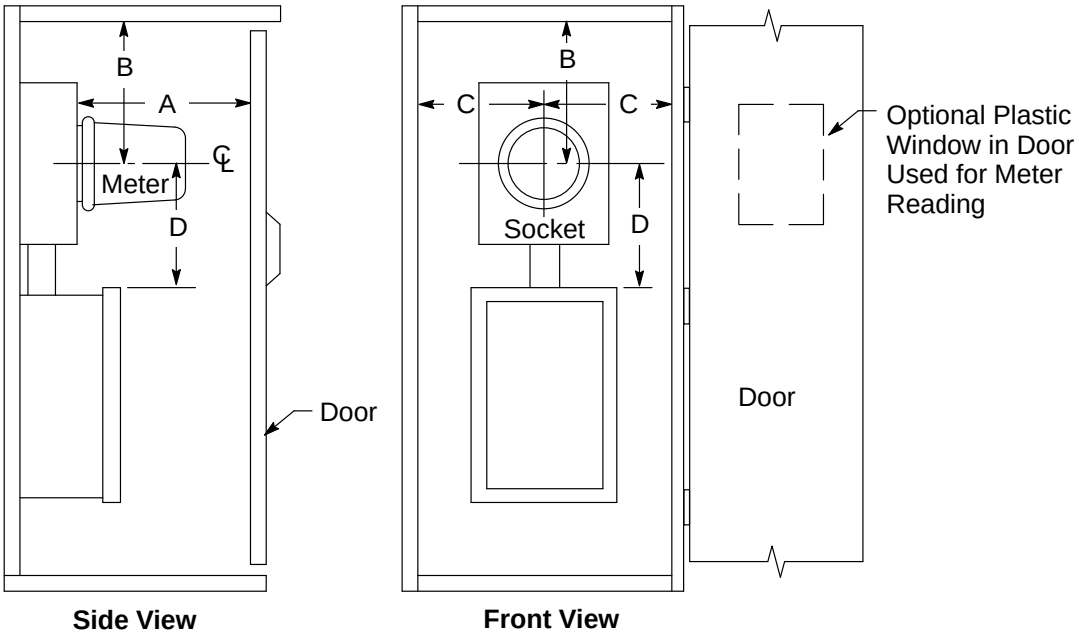

Figure 5-1
Meter Cabinet Enclosure Clearances

Table 5-1 Meter Cabinet Enclosure Clearance Dimensions

Dimension A	11-inch minimum / 15-inch maximum. See Note 1 below.
Dimension B	9-inch minimum to the edge of the access opening.
Dimension C	10-inch minimum to the edge of the access opening.
Dimension D	8-inch minimum from the meter centerline to the top of any protrusion below the meter or to the bottom of the enclosing cabinet.

1. The 11-inch minimum for Dimension A may be reduced to 8 inches only for residential, wall-mounted, meter cabinet enclosures.

5.4.3. Meter Set Clearance Requirements

Figure 5-2, “Electric and Gas Meter Set Separation Dimensions and Clearances,” found below, represent various metering facilities’ clearance requirements. If applicants install enclosures on their premises, the enclosures must meet the specifications provided in these illustrations.

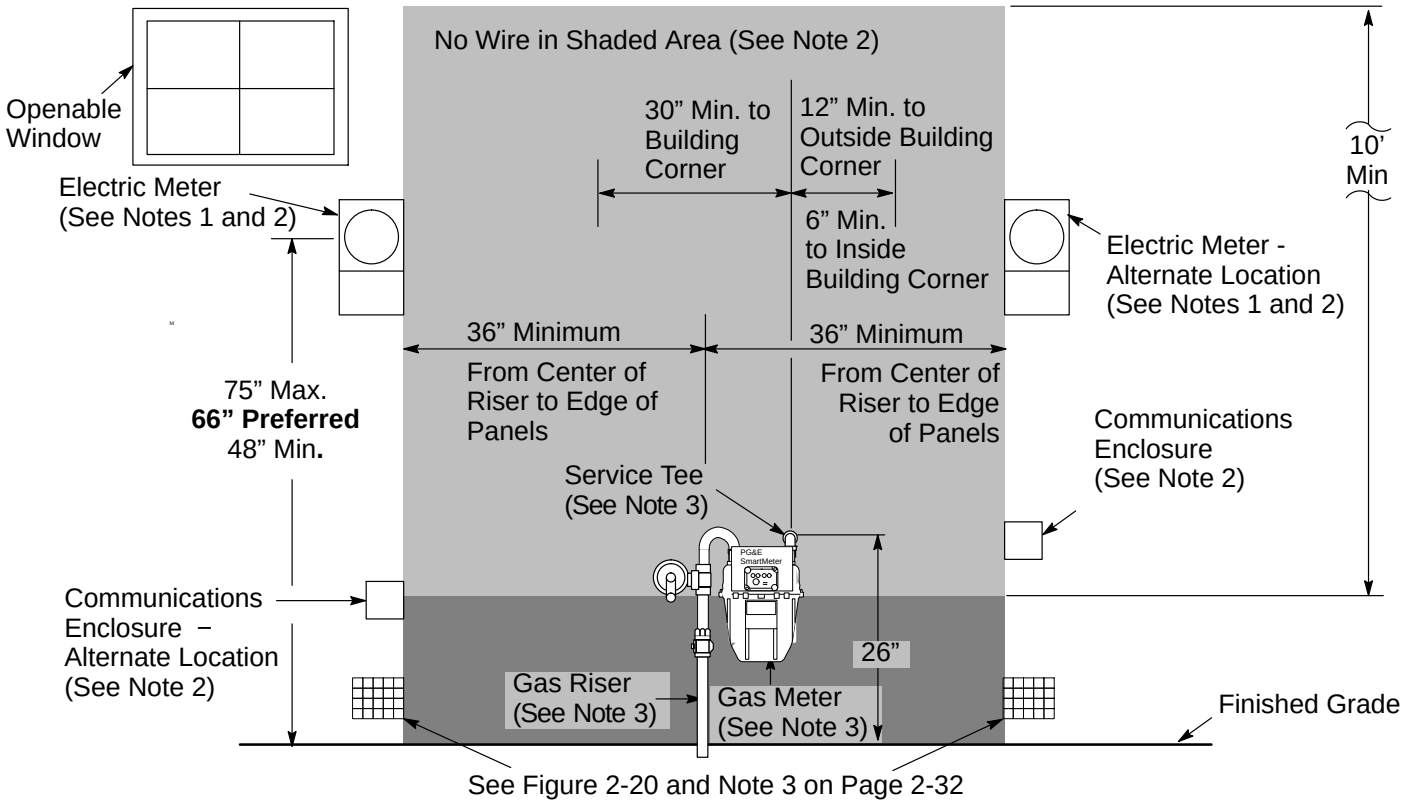

Figure 5-2
Electric and Gas Meter Set Separation Dimensions and Clearances

Notes in reference to Figure 5-2.

1. Electric meter panel locations are subject to utility approval and must comply with the applicable code requirements. PG&E does **not** have specific requirements for the distance from the electric panel to the outside building corner. See Section 5, “Electric Metering: General,” for properly locating the electric meters. See Subsection 5.4.4., “Working Space,” on Page 5-11, for electric meter working space.
2. Applicants must not install any electrical devices or equipment, including wires, cables, metering enclosures, and telecommunication enclosures, bond wires, clamps, or ground rods within the shaded area around the gas meter. The 36-inch distance can be reduced to 18 inches for electrical devices or equipment certified for NEC Class I, Division 2 locations.
3. See Figure 2-19, Notes 3 and 4, on Page 2-31, regarding gas facilities.
4. Applicants must not install water spigots, lines, gutter systems, or other sources of above-ground water to within 36 inches of the gas or electric facilities.

5.4.4. Working Space

Working space is defined as the whole area in front of the meter panel, the meter enclosure, the CT section, the service-conductor pulling or termination enclosure, or associated equipment. A working space permits access to the equipment and provides a safe working environment for personnel.

A working space must be located entirely on the applicant's property. Ask your local project coordinator to contact the PG&E electric meter department to review and approve of any exceptions to the Company's requirements for metering work spaces and locations.

The working space must be clear, level, and unobstructed at all times. See the descriptions below for the minimum required dimensions.

Wall-Mounted: For meter panels and service equipment the working space is **30 x 36 x 75 inches**. See Figure 5-3, "Semi-Flush Meter Installation," and Figure 5-4, "Enclosed Meter Installation," both on Page 5-12.

Floor-Standing (Pad-Mounted): For 600 volt switchboards, metering enclosures, and service termination equipment rated over 225 amps, the working space is **48 inches deep by 102 inches high**. For switchgear 601–25,000 volts, the working space depth is 96 inches. The width is the same dimensional width as the section. Measure the depth from the outside of the equipment's outer door. Concrete floors, housekeeping pads, and elevated platforms must extend out in front of the whole area to the minimum depth. See Figure 5-5 on Page 5-13 for additional requirements.

Table 5-2 Working Space Dimensional Requirements[1]

Voltage (Volts)	Equipment Type	Dimensions (Inches)			Figure(s)
		Width	Depth	Height	
0−600	Wall Mounted	30	36	75	5-3 & 5-4
	Floor Standing (Pad-Mounted)	Same as enclosure section	48	102	5-5
601−25,000	Floor Standing (Pad-Mounted)	Same as enclosure section	96	102	5-5

[1] Pad-mounted meter pedestals up to 200 amps require a 30 x 36 x 75-inch work space.

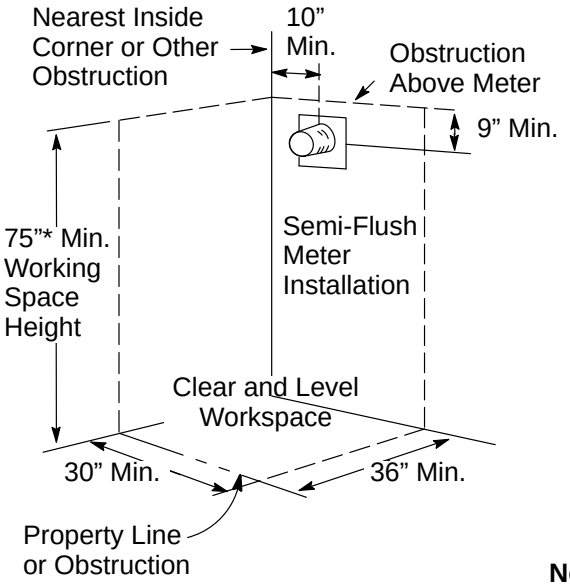

* 78” minimum for installations other than individual, field-installed meter panels.

Figure 5-3
Semi-Flush Meter Installation

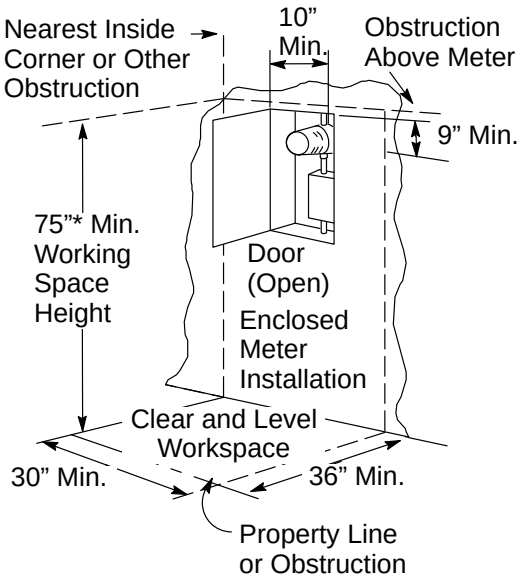

Note: To allow the cabinet door to open fully (90° or more), increase the 30” minimum-width dimension of the meter working space, as necessary.

Figure 5-4
Enclosed Meter Installation

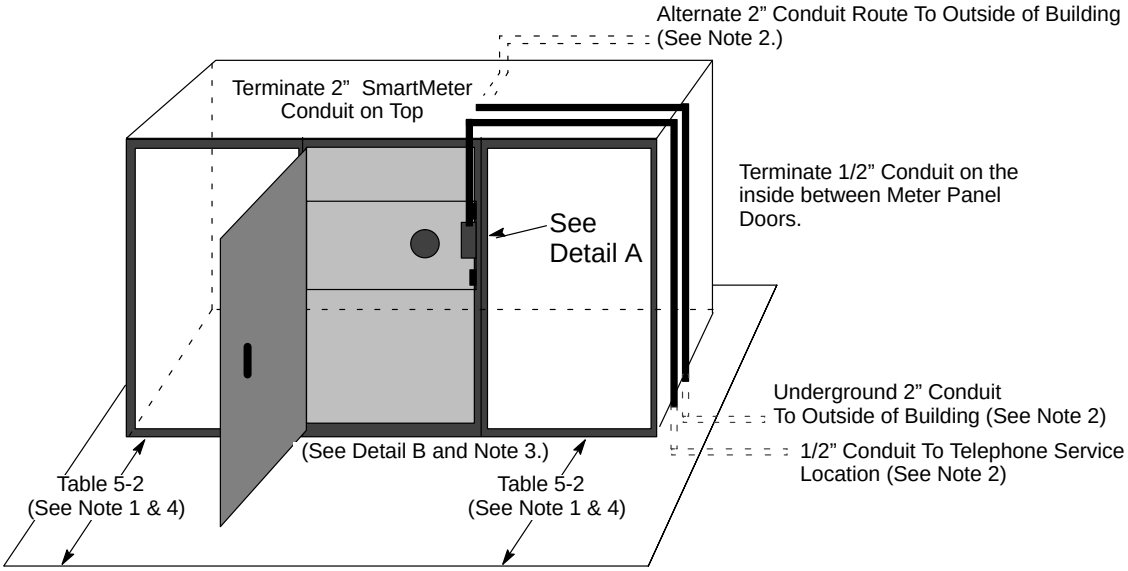

Figure 5-5
Preferred Location of Conduits for Indoor and Outdoor Meter Panels and Switchboards

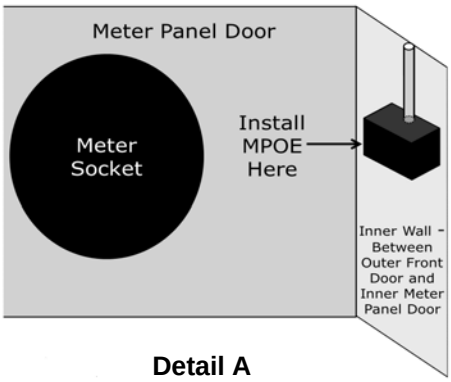

Detail A

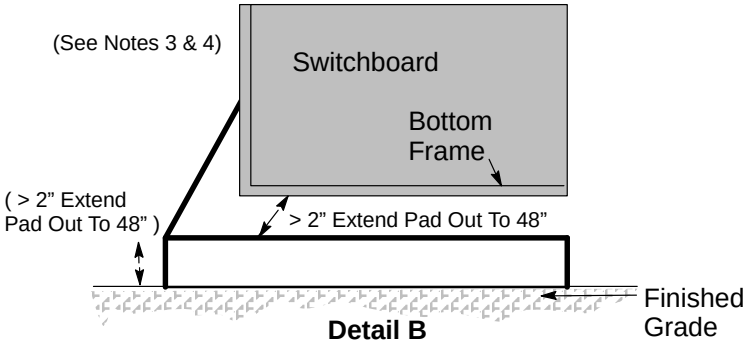

Detail B

Notes in reference to Figure 5-5.

1. A level, concrete structure (e.g., floor, pad) must extend out the minimum required distance in front of all sections to which PG&E requires access. This structure is used for floor-standing equipment (e.g., switchboard, termination enclosure). See Subsection 5.4.4., “Working Space,” on Page 5-11.
2. A 1/2-inch phone-line conduit is required for all indoor and outdoor meter panels rated 200 kW or greater. A 2-inch SmartMeter™ conduit is required only for indoor, wall-mounted or pad-mounted meter-panel enclosures of any size.
3. The switchboard’s bottom horizontal support frame must not protrude more than 3 inches above the floor or pad. This is in front of all PG&E sections (see Detail B).
4. The front edge of the switchboard must not be set back more that 2 inches either from the edge of a pad raised above ground or above the floor. This is from all PG&E sections.

5.4.5. Barricades

In some instances, a meter may be located in an area where the meter or working space is exposed to vehicles or hazardous conditions. In these cases, a permanent barricade outside of the working space is required. For vehicular traffic, applicants must ensure that a suitable barricade is erected.

A suitable barricade for vehicular traffic is concrete-filled steel pipes, 3 inches or greater in diameter, securely set in an adequate concrete pad for support. Also suitable for these conditions is a sleeve-mounted vehicle barricade where the sleeves are set in concrete.

Applicants also must ensure that suitable barricades are erected to protect personnel. A suitable barricade for this purpose is a heavy, wire-mesh fencing that is securely supported and is capable of protecting people from the hazards created by the moving parts of stationary machinery.

Contact your local PG&E inspector and project coordinator to determine if a barricade is required.

5.4.6. Meter Protection

Applicants must ensure that meters and metering equipment are enclosed in a protective cabinet in the following situations. Meter heights less than 36 inches are **not** allowed.

A. For **all** installations, when the meter is less than 48 inches high, as measured from the horizontal centerline of the meter to the standing surface. Meter heights less than 36 inches are **not** allowed.

B. When the meter is mounted on, or recessed in, any wall at a school or similar establishment and public safety is an issue.

C. When environmental problems are anticipated.

D. When corrosion problems are anticipated or present.

E. When vandalism is anticipated.

Any protective structure surrounding meters and metering equipment must be pre-approved by the local meter shop and provide safe working conditions as determined by PG&E. Approval from the local authority having jurisdiction may also be required.

5.5. Meter Identification and Seals

5.5.1. Properly Identifying and Marking Meters

Where individual meters serve a remote location, or where meters are grouped at a common location (both residential and nonresidential), applicants must ensure that they mark sites and identify meters properly. Applicants must ensure that each individual meter position, its service disconnecting means, and the unit or dwelling being served is marked clearly and permanently. The three examples on the following page describe acceptable permanent markings.

A. An identification plate attached by screws, rivets, or weatherproof adhesive.

B. Paint that cannot be removed using common solvents. Apply the paint either by using a stencil or by carefully hand-lettering the meter.

C. Manufactured decals that do not peel or fade. Tape-type labels are no longer acceptable.

The identification must be legible. It must include a specific apartment number, a street number, use, or location. Ensure that the information is verified. A store name or other generic description may be included, but does **not** constitute acceptable identification when used alone. **For meters that serve pumps or other large equipment, the ampacity rating of the service disconnecting means (i.e., breakers, fuses) along with the type of equipment and the nameplate rating must also be marked**. PG&E will **not** install meters without a permanent address or location mark at each meter location.

When it is appropriate, applicants should include the area being served by the meter when permanently marking the site.

PG&E may make an **exception** to the rules for permanent marking when the Company is requested to set a meter for a single-family home that is under construction. In this case, PG&E will set the meter if the home's address is noted clearly and legibly either on the street side of the dwelling or on the lot in front of the dwelling. PG&E understands that during construction, the "permanent" address sometimes is not available when the dwelling is ready for the meter to be set.

5.5.2. Sealing Meters and Metering Equipment

PG&E seals all meters and enclosures for **utility** meters, metering equipment, and service-entrance equipment using PG&E's seals.

Applicants cannot locate or install equipment within meter sections, meter panels, switchboard sections, or equipment enclosures with existing PG&E seals unless they receive authorization from the PG&E electric meter group.

EXCEPTION: Equipment that provides access for replacing over-current protection fuses is exempted.

Only an authorized PG&E representative can break the PG&E seal.

Certified meter service providers (MSPs) also will seal all meters and enclosures for meters, metering equipment, and test-bypass switches owned by their respective companies with their companies' seals, as described in the *DASMMD in California* (March 1999) document.

5.5.3. Locking Provisions

All transformer-rated and all three-phase installations must have provisions for sealing or locking all of the main service switches or breakers in a permanent (off) position. When installing service equipment of any phase

or ampacity that contains multiple service (disconnect) switches, the applicant must ensure that provisions for locking each individual service (disconnect) switch are provided. The applicant must ensure that the locking mechanism is a permanent installation and that the clip, with a hole for the lock shaft, is made of a rigid metal. The breaker or switch covers can be nonmetallic. Finally, the applicant must ensure that these provisions are sealable and lockable with a padlock having a 5/16-inch lock shaft.

5.6. Meter Types and Connections

The following requirements refer specifically to meter types and connections. Applicants must follow the guidelines listed below.

A. When installing a new service, ensure that the panel enclosures rated at 125 amps are Class 100 ampere services. Services and enclosures rated at 225 amps are Class 200 ampere services.

B. Ensure that transformer-rated meters have a current rating of less than 100 amps (e.g., CL5, CL10, or CL20).

C. Do **not** use K-based (i.e., bolt-in) meters when designing new installations. Services that need 400 amps (continuous) require current-transformer facilities.

D. Ensure that sockets meet the requirements of UL Standard UL-414, “Standard for Meter Sockets.”

E. Locate potential taps, including the neutral connection, behind a sealed panel.

F. Ensure that the meter manufacturer designs and fabricates transformer-rated meter sockets that are installed on hinged panels for back connection.

Applicants should use Table 5-3, “Meter Socket Requirements (Number of Jaws),” on Page 5-17, to find specific meter-socket requirements and to ensure they provide the proper equipment.

Table 5-3 Meter Socket Requirements (Number of Jaws)

Service			0−225 Amperes	226−320 Amperes [1]	400 Amperes and Above
Voltage	**Phase**	**No. of Wires**	**Self-Contained**	**Self-Contained**	**Transformer Rated**
120/240	1	3	4	4 [2]	6
120/208 [3]	1	3	5	—	—
120/208Y	3	4	7	—	13 or 15 [4]
240 [5]	3	3	5	5	8
120/240	3	4	7	—	13 or 15 [4]
277/480Y	3	4	7	—	13 or 15 [4]

1 A socket-based, Class 320-ampere (continuous) meter will be installed on a Class 400 meter panel, rated at 80% continuous (i.e., 320 amps). Do **not** use Class 400, bolt-in meters on new installations. Service rated at 400 amps continuous requires current transformers to be installed.

2 Only use a 4-jaw meter socket for a Class 320-ampere meter for single-phase residential applications.

3 In locations where PG&E maintains a 120/208-volt secondary system, 3-wire, single-phase service, typically the service is limited to what can be supplied by a main switch or service entrance rating of 225 amps. Single-phase loads that exceed the capacity of a 225-ampere main switch or service-entrance rating usually are supplied with a 120/208Y-volt, three-phase, 4-wire service.

4 The 15-jaw socket is acceptable, but not required.

5 Limited availability, at PG&E's discretion. **Not** for new installations.

Figure 5-6, “Connection Diagrams for Self-Contained Meter Sockets,” and Figure 5-7, “Connection Diagrams for Transformer-Rated Meter Sockets,” below, show the required connections for self-contained and transformer-rated meters.

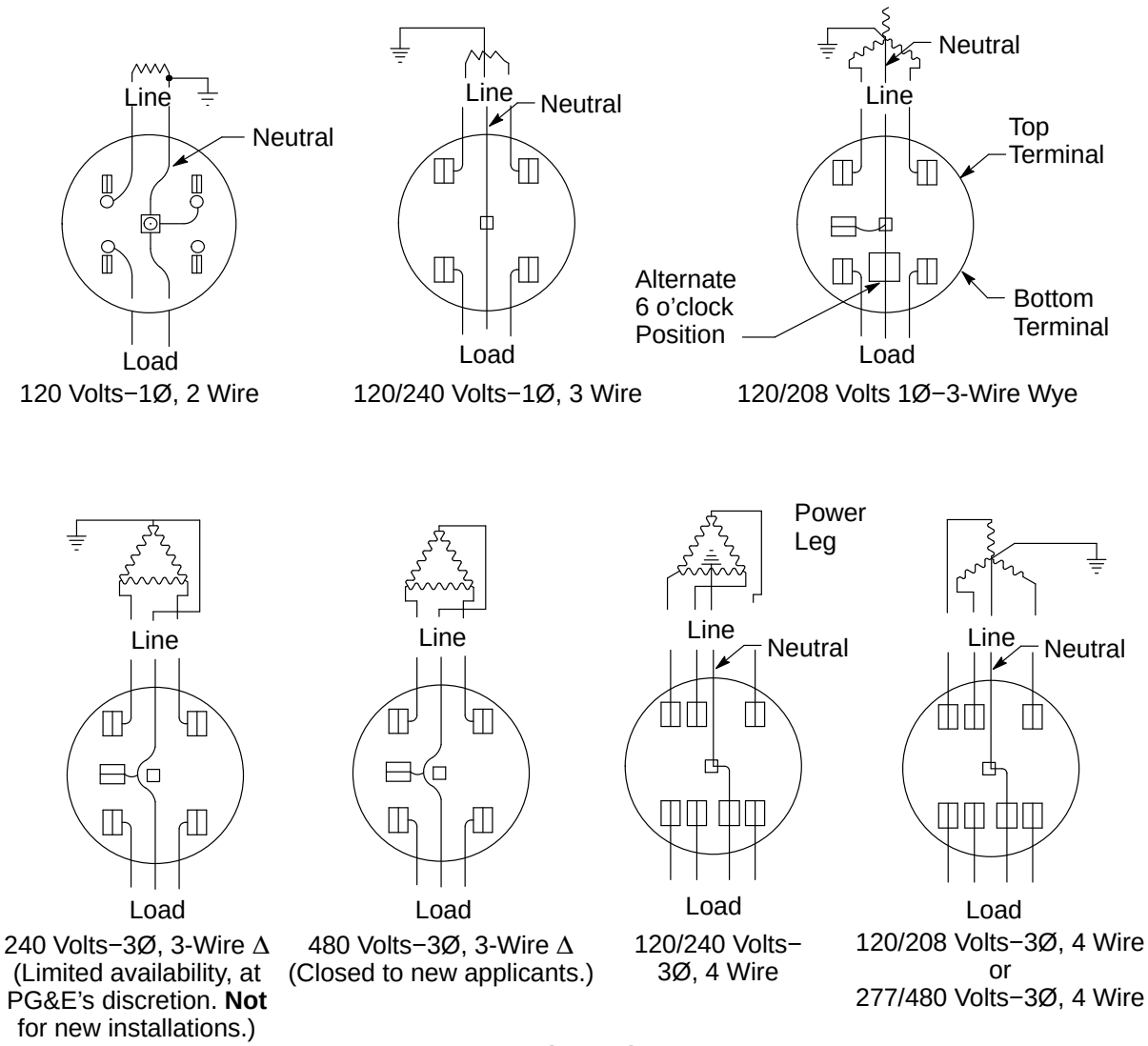

Figure 5-6
Connection Diagrams for Self-Contained Meter Sockets

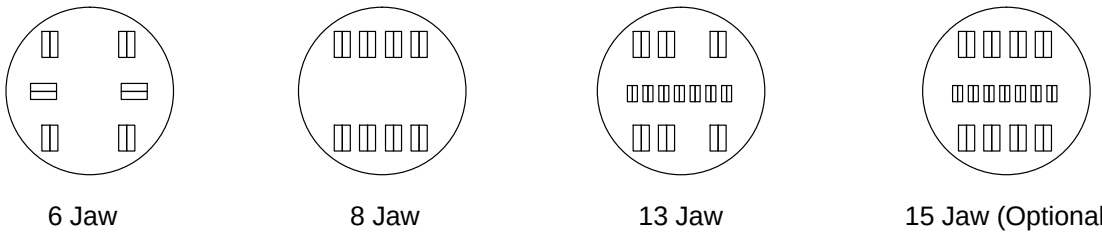

Figure 5-7
Connection Diagrams for Transformer-Rated Meter Sockets

NOTE: PG&E is responsible for wiring transformer-rated meter sockets.

5.6.1. Using a Meter Socket Adapter for Overhead-to-Underground Conversion

Applicants may use approved meter socket adapters to convert existing services. Do **not** use them to establish new service. For more information, see PG&E's Numbered Document 061032, "Residential and Small Commercial Overhead to Underground Electric Service Conversion." Consult a PG&E project coordinator to determine which conversion method to use. The applicant must ensure that the meter socket adapter's grounding strap is connected to the grounded wire within the meter panel.

5.6.2. Installing Non-Allowed and Unauthorized Customer Equipment

Applicants must **not** install any type of meter-adapter, surge suppressor or protection device (e.g., TVSS), meter socket adapter, power usage or recording device, security or monitoring equipment, or similar interface device in, on, or between the electric revenue meter and meter sockets or inside any PG&E sealed section, including the instrument transformer (i.e., CT, PT) or service termination sections. These types of installations are not allowed and compromises the applicant's electric service. If safe to do so, PG&E personnel will remove any customer-owned devices and leave them on the applicant's premises if they are discovered.

Only PG&E-approved meter socket adapters used for overhead-to-underground conversions are exempted.

5.6.3. Fire-Pump Connections

PG&E allows the following types of service connections to fire-pump meter panels or switchboards. The requirements are described below.

A. All fire-pump service connections must be approved by the local city, county, or state inspecting Authority Having Jurisdiction (AHJ). Site plans and equipment drawings must be submitted to PG&E for approval.

B. **The service disconnect, meter panel, switchboard, or switchgear for the fire pump must be located in the same electrical room as the main service meter panel, switchboard or switchgear, and utility termination section.** They cannot be located in another room or building. When installed outdoors, the equipment must be located next to each other. They cannot be located in another room or building. When installed outdoors, the equipment must be located next to each other.

   1. For main switchboard (i.e., secondary) service equipment rated up to 600 volts, the following types of connections are allowed:

      a. A fire-pump service tap installed from the utility termination section of the main switchboard to the fire-pump meter panel or switchboard. When fed from a PG&E underground service, the fire-pump service must be installed in rigid steel conduit and exit out of the top of the termination section or out of the upper sides, at least 12 inches above the terminating bus.

Do not place a fire-pump service tap in the termination section in either of the following two situations: (a) When the section is less than 90 inches high (see Figure 10-24, “Standard Switchboard Service Section With CT Compartment and Filler Panel, 0 Volts−600 Volts,” on Page 10-34); or (b) When the main switchboard is located below grade and has either a high side or back. (see Figure 10-15, “Switchboard Pull Section, High Entry,” on Page 10-26, for an illustration of the PG&E service entry).

b. A fire-pump service connected in a dedicated tap section of the main switchboard.

If allowed, the local AHJ may require the tap section to be located away from the main breaker on the opposite side of the termination section.

c. A fire-pump service connected to the load-side (i.e., after the main breaker) of the main switchboard.

2. For main switchgear (i.e., primary) service equipment rated between 601−25,000 volts, the following types of connections are allowed:

NOTE: Do not place fire-pump service taps or connections in the utility termination section of a primary switchgear.

a. A fire-pump service connected in a dedicated tap section of the switchgear.

b. A fire-pump service connected to the load-side (i.e., after the main breaker) of the main switchgear.

3. For main switchboard or switchgear service termination equipment rated between 0−25,000 volts, the following type of connection is allowed:

a. A separate and dedicated utility service that is connected directly to the fire-pump meter panel, switchboard, or switchgear. This is usually referred to as a second PG&E service. (See Figure 5-8, “Fire-Pump Equipment Location and Service Connection Options,” on Page 5-21.)

C. Proper access and signage is required for meter panels and switchboards serving fire pumps.

D. Ensure that fire-pump wiring configurations, either 3-wire or 4-wire, are the same as the wiring configurations for the main switch.

Electric Service Termination and Meter Room

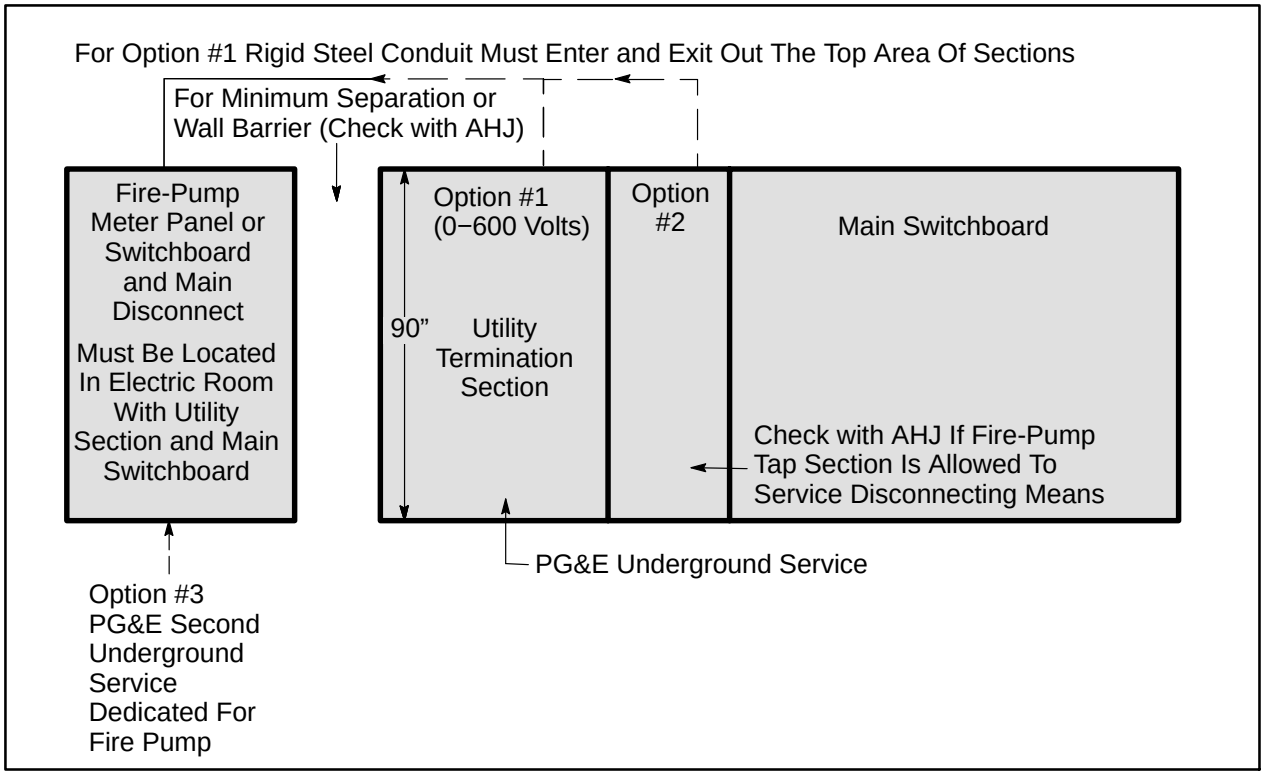

Figure 5-8
Fire-Pump Equipment Location and Service Connection Options

5.7. Main Service Disconnects and Switching Sequences

5.7.1. Main Service Disconnects

For each installed meter, the applicant, in compliance with applicable codes, must furnish and install a fusible switch, circuit breaker, or other approved disconnecting means for controlling all of (and **only)** the energy registered by that meter. When the governing code or ordinance permits, the disconnect means may consist of a group of fusible or circuit-breaker disconnects. PG&E requires access to these disconnects.

Except for transformer-rated metering equipment, applicants do **not** have to place the main service disconnect switch adjacent to the meter. The switch may be located inside or outside of the building being served, as described in the applicable electrical codes. When the switch is in another building or location, proper access, signage, and maps are required.

PG&E prefers applicants to have provisions for individual disconnects when they use switchboards with multimeter installations.

NOTE: See Paragraph B., in Subsection 1.14., “Determining the Service Rating,” when more than one disconnecting means is installed.

5.7.2. Main Service Disconnect Switch Rated for Amperes Interrupting Capacity (AIC)

State and local codes require the service equipment's main disconnect switch and fuse, or the circuit breaker, to be rated at the available short-circuit current value.

PG&E designs its facilities so that the short-circuit duty at the service termination will not exceed 10,000-amps symmetrical for new, single-family, residential applicants that are supplied by an individual service drop or lateral that is rated at 225 amps or less. This service includes mobile homes and duplexes.

Typically, it is not feasible for PG&E to design its facilities to limit the short-circuit duty to 10,000 amps for other electrical services; for example, a 400-ampere, multimeter, residential or nonresidential installation. For these installations, on request, PG&E will provide the maximum available short-circuit current based on the service equipment's capacity. If the applicant increases the service equipment's capacity, the maximum-available short-circuit current may be higher.

5.7.3. Arc Flash Assessment

PG&E's electric system is dynamic and continually being reconfigured due to system needs and general maintenance. Therefore due to its many variables a range of impedance's should be considered in an arc flash assessment. To request an arc flash assessment contact your local project coordinator.

5.7.4. Electronic Trip Circuit Breakers

Electronic circuit breakers using a trip unit are programmable devices that measure the current flowing through the circuit breaker and initiate a trip signal, when appropriate. An electronic trip unit has multiple dials that can be adjusted to various settings. The IR setting is the continuous current value and must not exceed the ampacity rating of the enclosure. It is similar to the capacity or ampacity rating on thermal or thermal magnetic circuit breakers. The IR settings must be indicated on the trip unit. The IR settings typically are lettered and identified on a chart with the corresponding ampacity values. Electronic trip units are available with multiple ratings for each standard frame size.

The circuit breaker frame is the housing that contains the current-carrying and current-sensing components, along with the tripping and operating mechanism. The frame size (e.g., 800, 1,200, 1,600 amps) is the largest ampere rating available in a group of circuit breakers of similar physical configuration. Other types of breakers may have different frame sizes.

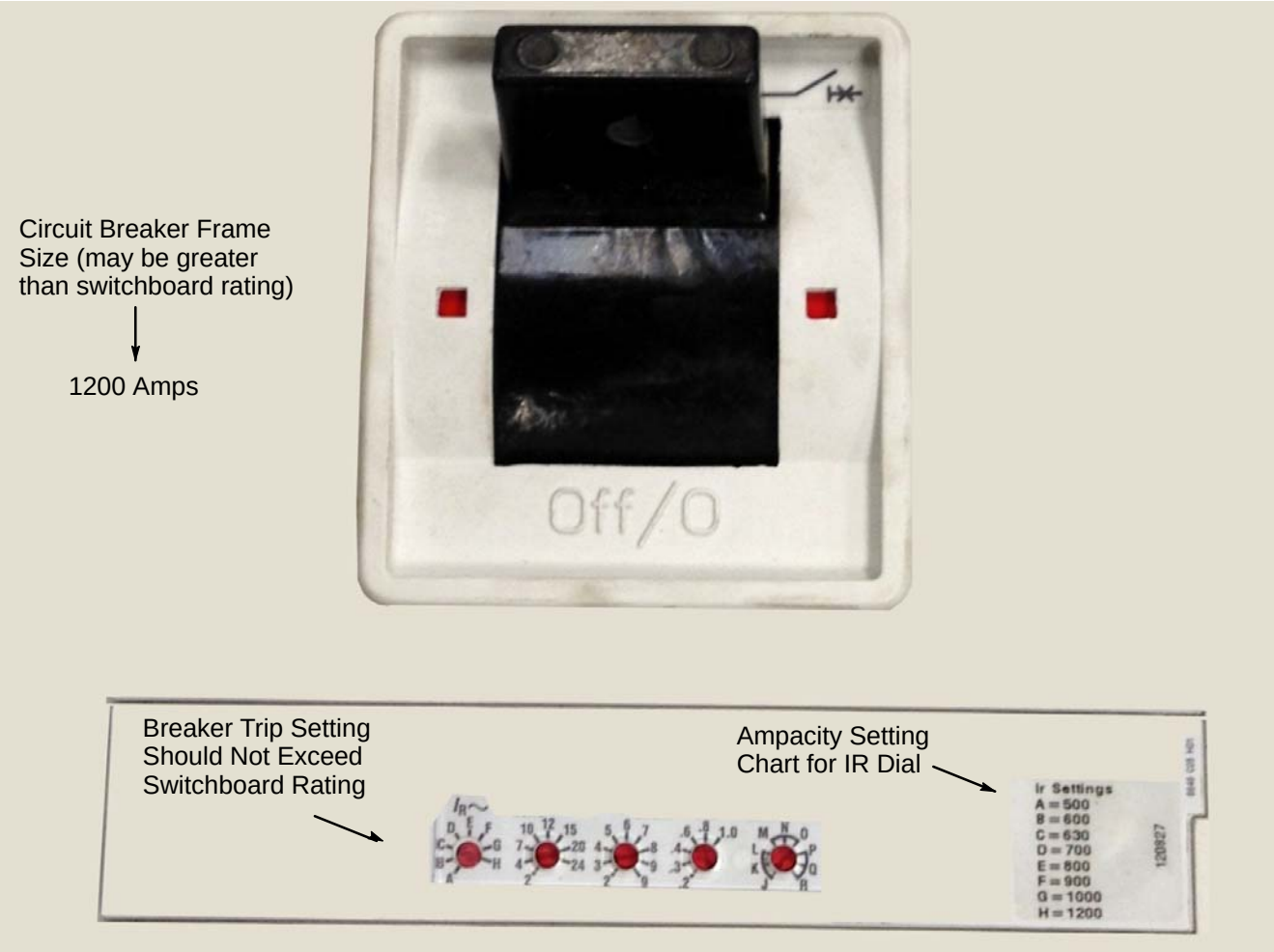

Figure 5-9
Circuit Breakers with Electronic Trip Unit

Notes in reference to Figure 5-9.

1. Match the letter on the IR dial to which the arrow head is pointing with the letter on the IR setting chart to determine the ampacity setting for the breaker.

5.7.5. Meter and Main Service Switch Sequence

PG&E places its meters and metering equipment ahead of (i.e., on the supply side of) the applicant's main service disconnecting means. Figure 5-10, "Single Meter With Main Service Switch," Figure 5-11, "Single Meter With Multiple Service Switches," and Figure 5-12, "Multimeter Disconnect Without Main Switch," below, all provide examples of this type of installation. Figure 5-14, "Multiple Remote Switchboard or Meter Panel Locations," on Page 5-25, also provides an example of meter and main service switch sequences for large projects with multiple meter rooms or buildings.

PG&E permits exceptions to this sequence only in circumstances where applying the electrical code requirements result in the applicant's main service disconnect means being installed ahead of PG&E's metering and metering equipment. Figure 5-13, "Multimeter Installation With Main Disconnect Switch," below, provides an example of this type of installation. In these instances, an individual disconnect switch also must be installed on the load side of each meter.

The local jurisdiction having authority for enforcing the electrical code requirements determines most of the requirements that applicants must follow when installing their means to disconnect. PG&E requires a main service disconnect for multimeter installations with more than six meters or individual service disconnects.

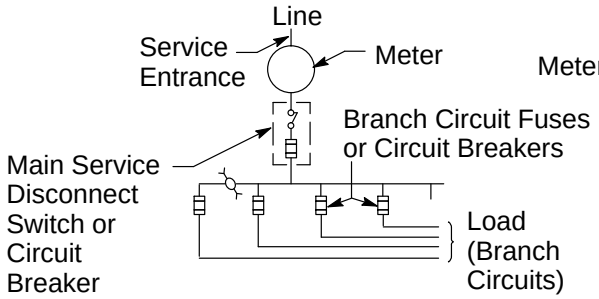

Figure 5-10
Single Meter With Main Service Switch

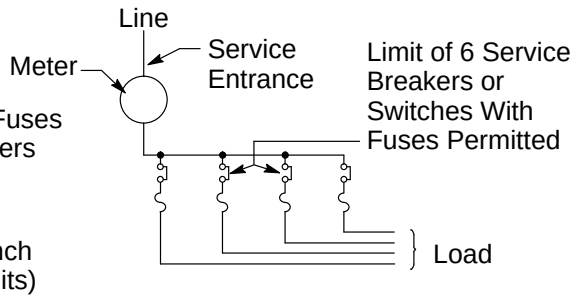

Figure 5-11
Single Meter With Multiple Service Switches

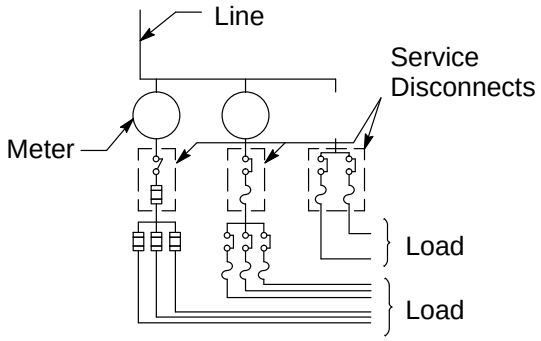

Figure 5-12
Multimeter Installation Without Main Disconnect Switch

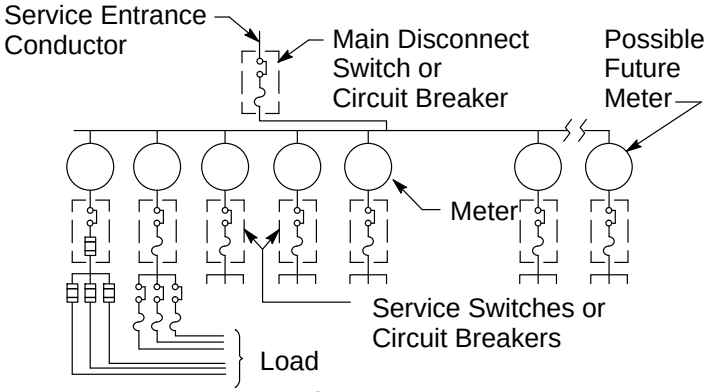

Figure 5-13
Multimeter Installation With Main Disconnect Switch

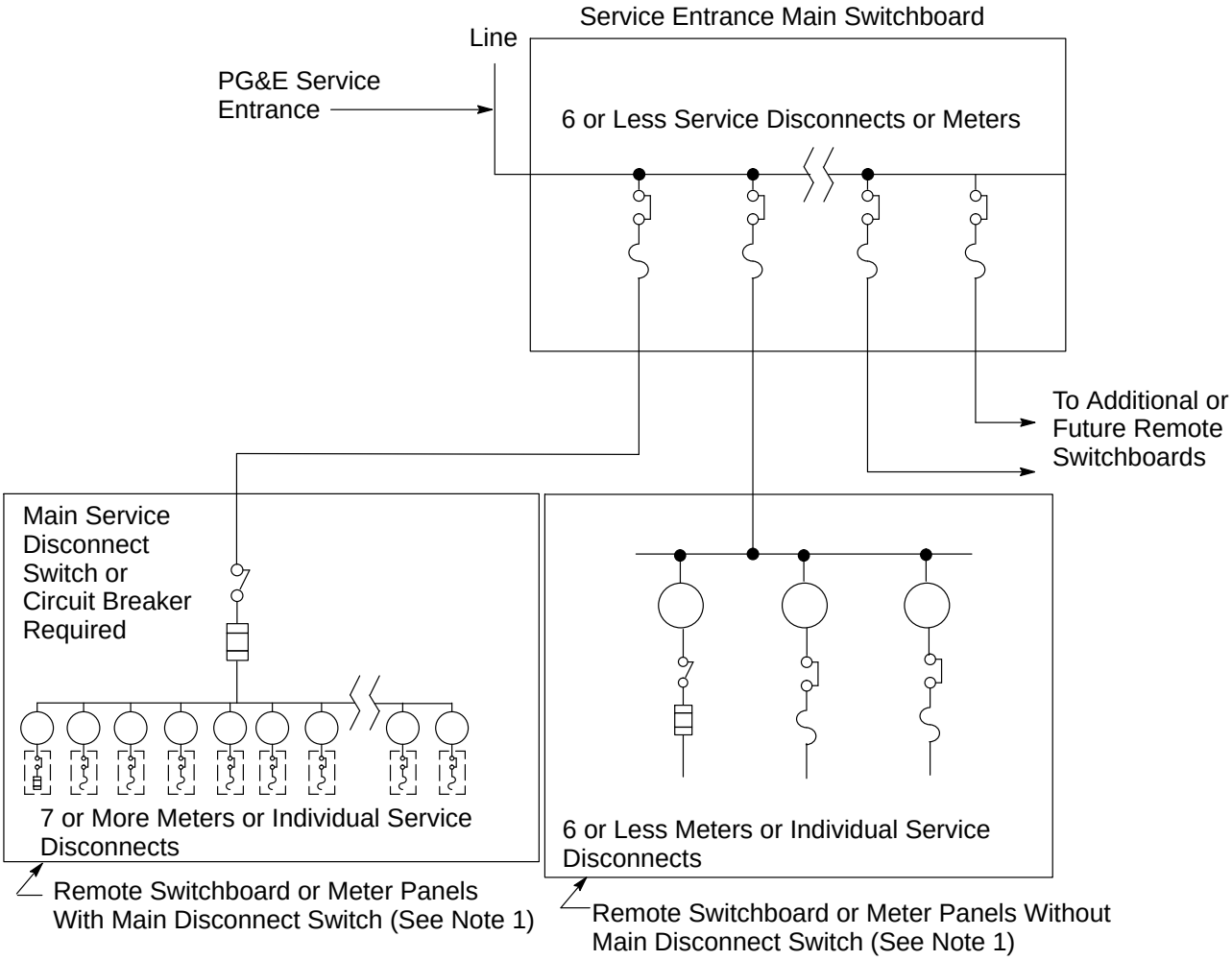

Figure 5-14
Multiple Remote Switchboard or Meter Panel Locations

Notes in reference to Figure 5-14.

1. When a switchboard or meter panel is located in a different room, floor, or building from the main switchboard, it is considered remote.

5.8. Grounding

Applicants must bond and ground their electric services and metering equipment as required by applicable electrical codes, local ordinances, and PG&E requirements.

A. Applicants must **not** use PG&E's gas facilities as part of the electrical grounding system.

1. Do **not** install electrical devices or equipment, wires, cables, bonding or grounding wires, clamps, or ground rods around the gas meter set as shown in Figure 2-19 on Page 2-31 and Figure 2-22 on Page 2-34.

2. Do **not** use PG&E's gas service piping, gas risers, or meter facilities for electric bonding or grounding that allows the gas meter, piping, or other gas facilities to become current-carrying conductors.

3. Do **not** allow gas pipe to be electrically bonded within meter enclosures, cabinets, or meter rooms.

B. PG&E supplies single-phase, 120/240-volt and 120/208-volt services and three-phase, 4-wire wye and delta services with a grounded service neutral conductor. When PG&E permits a three-phase, 3-wire, 240-volt service, one phase conductor must be grounded.

C. **Applicants must locate the terminations (e.g., ground bus) for their grounding electrode conductors outside of any section that PG&E seals**. Applicants must ensure that their terminations are designed to permit their grounding systems to be isolated, when necessary, from PG&E-supplied services. See "Notes in reference to Figure 5-15 and Figure 5-16.," on Page 5-27, specifically Note 2, which requires a continuous bond wire when grounding outside of the PG&E sealed section.

D. As mandated in the applicable sections of the electrical code, applicants may be required to physically protect their grounding electrode conductor against mechanical damage. PG&E prefers, but does not require, the grounding electrode conductor wire to be protected against physical damage by rigid steel conduit or armored cladding. Metal conduit must be bonded to an effective, grounded, fault-current path as described in the electrical code requirements.

E. Applicants must ensure that a grounded neutral connection, which is required for **safety** and metering purposes, exists in the PG&E-sealed section and is terminated in the same enclosure as the grounding electrode conductor.

F. When installing ground rods, applicants must only use approved ground rods and clamps as described in Numbered Document 013109, "Corrosion Resistant Ground Rods and Ground Rod Clamps," located in Appendix C. For homes and buildings, an Ufer grounding system using rebar is an acceptable substitute to the ground rod method. When ground rods are installed for concrete pads, refer to Numbered Document 045292, "Concrete Pad for Three-Phase, Loop-Style, Pad-Mounted Transformers." When ground rods are installed for equipment pads other than transformers (e.g., switchboards), install them according to their application. Finally, when installing ground rods in box pads, use Numbered Document 064309, "Box-Pad for Pad-Mounted Transformers," for installation information.

G. To ensure proper access to PG&E facilities during installation and maintenance, do not attach the bonding and grounding attachments for communication equipment on or near any PG&E sealed sections of the meter panel that would restrict access to the panel doors and meter.

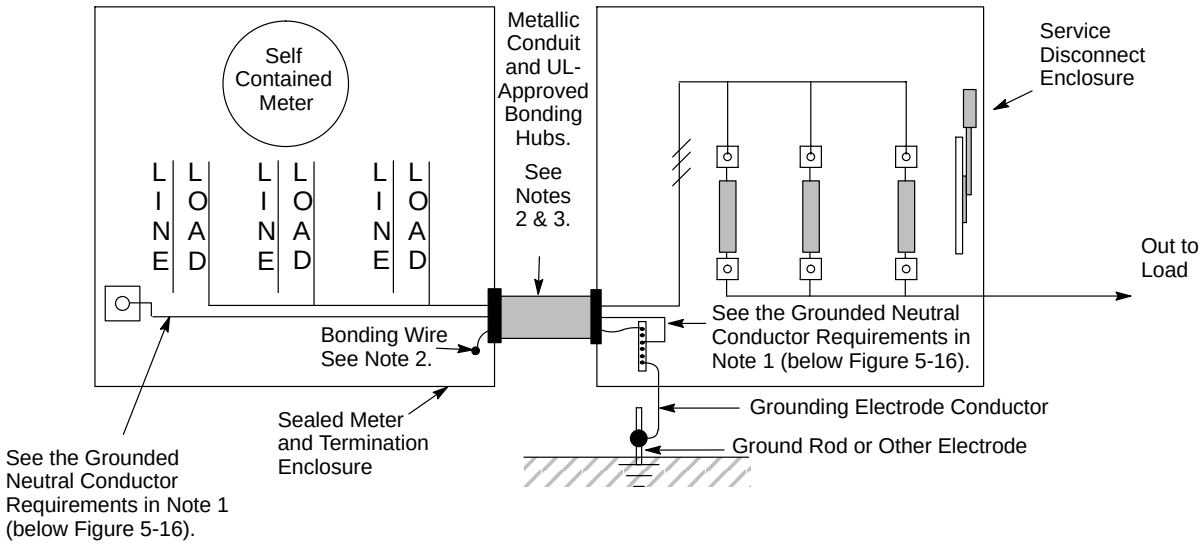

Figure 5-15
Grounding Outside of the Sealed Section−Self Contained Meter

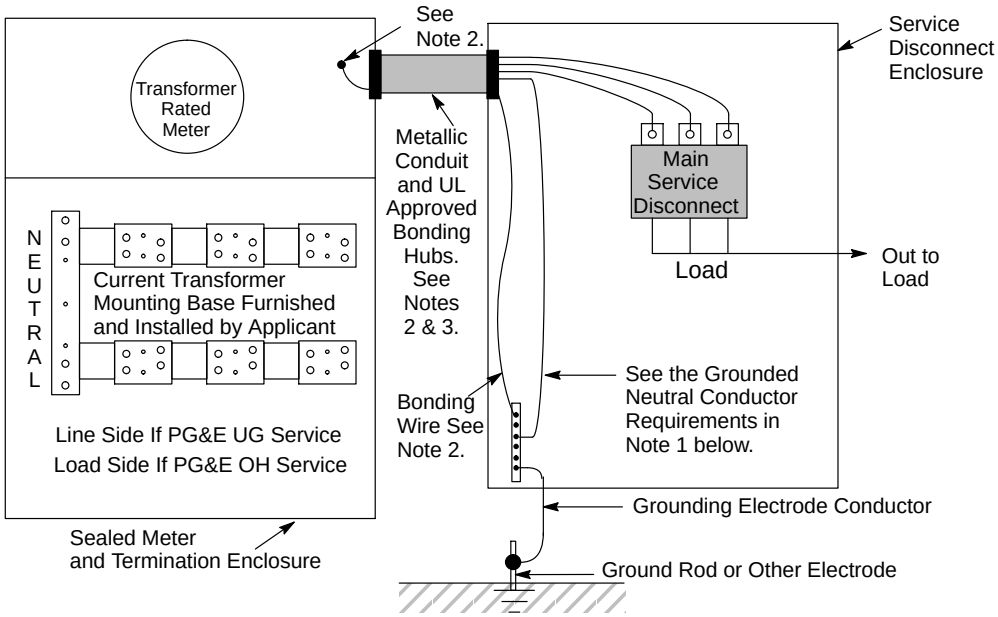

Figure 5-16
Grounding Outside of the Sealed Section−Transformer Rated Meter

Notes in reference to Figure 5-15 and Figure 5-16 are required for the safety of workers and the proper operation of PG&E facilities.

1. It is a requirement that the PG&E neutral conductor be grounded. This can be accomplished by terminating the neutral conductor to a grounded (i.e., non-insulated) neutral bus or to a ground bus in the service disconnect switch, as shown in Figure 5-15 and Figure 5-16. Or if provisions are available, terminate the neutral to a dedicated ground-rod and electrode conductor used solely for a meter panel more than 6 feet away.
2. An Equipment Grounding Conductor (EGC) is required between the PG&E service termination enclosure (e.g., meter panel) and the service disconnect enclosure. This is accomplished by attaching a bonding wire to the inside of the enclosures. A metallic conduit with Myers hub fittings that are U.L. certified for bonding also are required. The conduit and fittings must be approved by PG&E and the local authority having jurisdiction.
3. The metallic conduit diameter size must be equal to, or larger than, the diameter of the maximum knockout manufactured in the panel. The approved bonding hubs should not extend out past the edges of the meter panel.

5.9. Temporary Service

5.9.1. Temporary Service Using Permanent Service Panels

To lessen the potential for damage by staples and nails during the construction phase, applicants must use only **rigid metal conduit (RMC)** in locations where permanent service facilities will be installed and/or energized before completing the wall. The steel protects the conduit and/or cables from damage. Applicants also must protect their grounding conductors against mechanical damage by rigid steel conduit or armor cladding that runs from the main panel to a subterranean location and is embedded in concrete (e.g., garage). The service facilities and the wall must be a permanent and stable structure. If couplers are installed they must be of the same type (RMC) as the conduit. If transitioning from steel to rigid plastic the coupler must not reduce the internal diameter of the conduit. Refer to the steel and steel to plastic couplers in Numbered Document 062288, "Underground Conduits," located in Appendix C. The service panel and facilities must meet all PG&E and local jurisdiction requirements. The service facilities must pass inspection by a PG&E inspector before being energized.

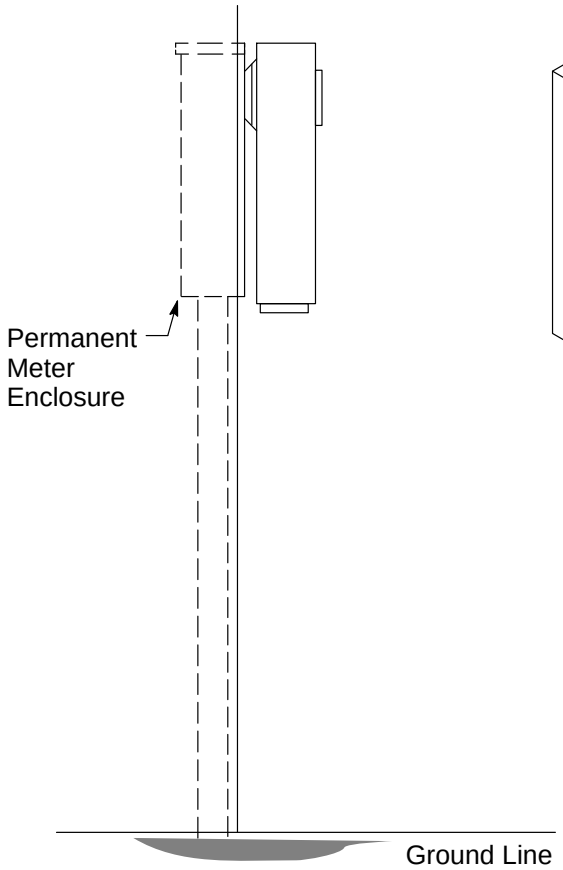

Figure 5-17
Plug-In Temporary Service

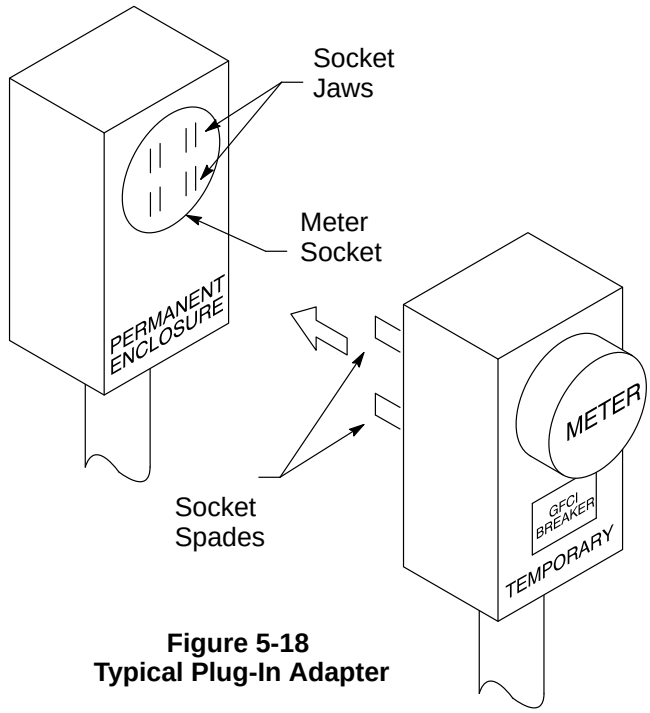

Figure 5-18
Typical Plug-In Adapter

Note: Make a neutral connection by attaching a pigtail directly to the neutral with a #4 copper wire.

5.9.2. Temporary-Service Metering Pedestal

Applicants must coordinate the connection of pedestal service conductors with PG&E project coordinators. **Before** installing temporary-service metering pedestals, applicants must obtain any inspections and permits that are required from the local authority having jurisdiction.

Applicants must install temporary-service metering pedestals as shown in Figure 5-19, “Temporary-Service Metering Pedestal,” below.

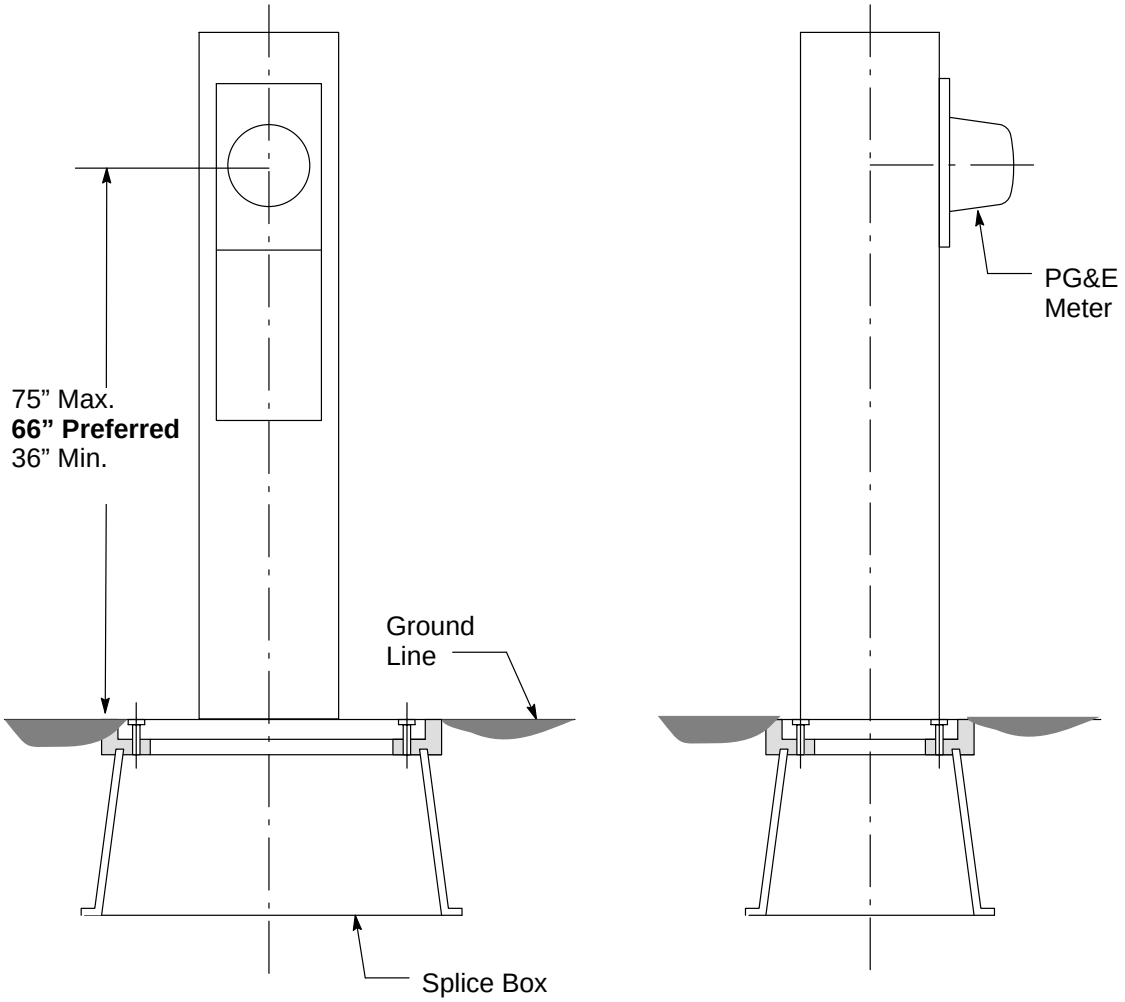

Figure 5-19
Temporary-Service Metering Pedestal

5.9.3. Temporary Plug-In Service

The local inspection authority having jurisdiction must approve all of the permanent service connections to the main service disconnect **before** an applicant installs a temporary service adapter. Additionally, the local authority having jurisdiction must approve the applicant’s plan for installing and using temporary service adapters.

Applicants must install temporary plug-in service as shown in Figure 5-17, "Plug-In Temporary Service," and Figure 5-18, "Typical Plug-In Adapter," both on Page 5-28.

5.10. Connecting Non-Utility Power Sources to Utility Services

By enacting the *California Health and Safety Code*, Division 104, Part 15, Chapter 5, Sections 119075 through 119090, the legislature of the state of California intended to prevent electricity generated by permanent or portable electric generators from backfeeding into a utility's electrical distribution system. In addition, *California Code of Regulations* (*CCR*) Title 8, Section 2320.9, "Backfeeding or Interconnection," says that electrical power sources, both permanent and temporary, can **not** be connected to a premises' wiring system, or parts of such a system, unless positive means are used to prevent electricity from being transmitted beyond the premises' wiring system, or beyond any intentionally segregated parts of such a system.

EXCEPTION: The service utility can authorize an interconnection.

A **positive means** is defined in this *CCR* subpart as a device that, when used or operated, interrupts or prevents the flow of current to or from the electrical system. Also, a positive means provides the device operator or user with a visual or definite indication of the existing condition or state of the electrical system.

Before installing an applicant-owned and operated generator that may or may not operate in parallel with PG&E's system, the applicant must contact a local PG&E project coordinator for the interconnection requirements specific to the location where it will be used. PG&E's Electric Generation Interconnection (EGI) department may be reached by email at gen@pge.com, or leave a message on their hotline at 415-972-5676. Also, for interconnection requirements, applicants should refer to PG&E's *Distribution Interconnection Handbook*, which is available on PG&E's Internet website at http://www.pge.com/mybusiness/customerservice/nonpgeutility/generateownpower/distributedgeneration/interconnectionhandbook/index.shtml.

NOTE: **See Numbered Document 060559, "Disconnect Switch Requirements For Distributed Generation Customers," located in Appendix C, when customer generation systems are installed on their premises.**

5.10.1. Specific Interconnection Requirements for Services Up to 600 Volts

Residential and small commercial applicants with generating facilities on their premises who want to take advantage of PG&E's standard net energy metering (NEM) program must meet the following requirements.

A. Requirements for Small Power Generators (Qualifying Facilities) and Co-Generation Interconnections Including NEM Interconnection Installations

Table 5-4, "Requirements For AC Disconnect Switches," on Page 5-31, shows the requirements for an alternating current (ac) disconnect.

Table 5-4 Requirements For AC Disconnect Switches

Inverter-Based Generators	Phase(s)	AC Disconnect Required?
Self-Contained Meter Panel, Socket-Based, 320 Amps or Less (Continuous Current Rating) *	Single	No
All Other Self-Contained or Transformer-Rated Meter Panels	All	Yes
Non-Inverter-Based Generators	**Phase(s)**	**AC Disconnect Required?**
All Self-Contained and Transformer-Rated Meter Panels	All	Yes

* An ac disconnect is required for all K-base meter panels of any ampacity rating.

A fusible ac disconnect switch is required for generators that do not have overcurrent protection (e.g., breakers, fuses) at the point of interconnection.

As specified in *Electric Rule 21*, "Generating Facility Interconnections," and as required by PG&E, the generating facility must have an ac disconnect switch that meets the requirements described in Numbered Document 060559 and listed below.

- Easily accessible by PG&E, when requested.
- Manually and gang operated. Lockable in the "open" position.
- Allows visible verification that an air-gap of separation has occurred.
- Located 10 feet or less from PG&E's electric meter at the point of common coupling or interconnection and is seen easily from the panel.
- Permanent, approved sign(s) attached at PG&E's electric revenue meter's point of common coupling. A map showing the location of the ac disconnect switch also may be required.
- Installed in a safe and acceptable location that meets the same height and working space requirements as a meter panel. The height is measured from the ground to the top of the switch.

B. Virtual Net Energy Metering − VNEM (NEMV)

This program allows qualified participants to install a single solar system to cover the electricity load of both common and tenant metered areas connected at the same service delivery point.

This "Electric Schedules" table helps housing owners allocate a solar system's electricity to tenants enabling residents to receive the direct benefits of the building's solar system without requiring the generator to be physically connected to each billing meters.

Refer to PG&E Bulletin TD-6999B-005, "VNEM Installation Requirements," included in Appendix B, which explains the requirements for VNEM installations and illustrates the various metering and connection options for VNEM projects. Check the PG&E Electric Schedules website for the latest information on this program.

C. Requirements for Generators That Are *Not* Permanently Connected (i.e., Temporary Connections)

Portable electric generators must be connected as described in the *California Health and Safety Code*, Section 119075(b). This code says that any portable electric generator that can be connected temporarily to an applicant's electrical system, and that is supplied typically by an electrical corporation or state or local public agency, can be connected only after separating the applicant's electrical system from that of the electrical corporation or state or local agency.

This rule applies to any generator connected as a temporary (i.e., nonroutine, nonscheduled) or emergency source of power. Connect any portable electric generator that is used periodically as a source of power, either on an as-needed or scheduled basis, as described in Subsection 5.10.1.D., below. An example would be a generator used to provide backup power for equipment maintenance.

D. Requirements for Generators That Are Connected Either Permanently or Periodically to an Electrical Service and Used on a Planned, Routine, or Scheduled Basis, but Do *Not* Operate in Parallel with the PG&E System.

Generators falling under this category must have a disconnect switch that is accessible to, and in a location approved by, the serving utility. These generators must be connected as described in PG&E's *Electric Rule 2*, "Description of Service," Item E.6, and in the *California Health and Safety Code*, Section 119075(c). These rules state that any electrical generator that can be permanently connected to an applicant's electrical system must be connected only by means of a **double throw switch** (see Figure 5-20 on Page 5-33). This switch isolates the applicant's electrical system from that of the electrical corporation or state or local agency.

EXCEPTION: Generators that are designed to run in parallel with the servicing utility's system, and that are approved by that utility, are exempt from these rules.

The double throw switch may be either a manual or automatic transfer switch meeting the requirements of UL Standard 1008, "Transfer Switch Equipment." The switch may be an integral part either of the generator assembly or of the service facilities, and must be approved by the authorities having jurisdiction.

Generator

Please visit "Electric Generator Safety" (http://www.pge.com/generator/) for more information. (From PG&E's home page, click "For My Home," then from the "Education & Safety" drop-down box, click on "Gas & Electric Safety." On the left side of the page, click "Electric Generator Safety."

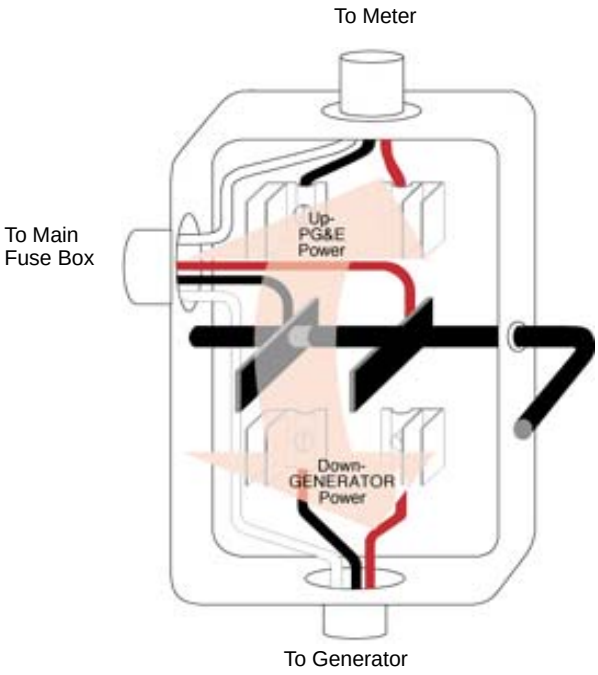

Figure 5-20
Transfer Switch

NOTE: The transfer switch must be installed after the meter panel on the customer's side, **not** before the meter panel on the PG&E side.

E. Requirements for NEM Revenue Metering With a 4-Wire System at the Point of Common Coupling

NEM revenue metering that has a 4-wire system at the point of common coupling also must have a NEM meter panel configured for a 4-wire system (three phases and a neutral).

When the normal source of voltage supplying PG&E co-generation metering potentially can be interrupted, PG&E, at its option, may install metering with an auxiliary source of power at the applicant's expense.

F. Requirements for Generators Powering 10 kW (or Less), Stand-Alone, Field-Installed Telecommunication Facilities and Special Applications

Applicants can own 10 kW (or less) generators used for stand-alone, field-installed, telecommunication facilities and special applications. However, PG&E field personnel perform maintenance and routine testing on electric supply and meter facilities, and must be able to perform these functions even when applicants are unable to be present. Therefore, applicants must provide a positive means to prevent their generators from backfeeding into the utility system. This requires installing special equipment, as described in the PG&E *Distribution Interconnection Handbook*.

Usually, these equipment installations are performed in the field. The generator or alternate power source either is integrated with or is made a part of stand-alone equipment and metering facilities. For example, an applicant could install a double throw switch to isolate his or her equipment and power supply and prevent electricity from flowing into the electric metering and supply system.

5.10.2. Warning Statements and Labels for Interconnected Services

California Health and Safety Code, Section 119080(a), requires that every manufacturer of a portable or permanent electrical generator that is capable of being connected either permanently or temporarily to a commercial, industrial, or residential structure's electrical system include a warning statement.

The warning statement must be published in the generator's instruction manual and a legible warning label must be present on the generator. The warning statement must contain the requirement of *California Health and Safety Code*, Section 119075 and explain potential electrical hazards that backfeed can create when it flows into a utility's distribution system.

The same warning information must be included in all advertisements offering portable electrical generators.

California Health and Safety Code, Section 119080(b), also requires that portable electrical generators display a legible warning label on a visible surface of the generator. It goes on to say that individuals or public agencies can **not** sell or rent to another person or public agency, or offer for sale or rent to another person or public agency, a portable generator that does not have a warning labeled displayed on the equipment.

5.10.3. Violation

California Health and Safety Code, Section 119090, states that violating the requirements of Section 119075 through Section 119085, "Electrical Hazards," is a misdemeanor offense, subject to a fine of not more than $500.00 or not more than 6 months imprisonment.

5.11. Plug-In Electric Vehicle Interconnections

Residential customers with Plug-In Electric Vehicles (PEVs) can connect the Electric Vehicle Supply Equipment (EVSE) to their residences under PG&E's existing "Electric Schedules," PG&E Bulletin TD-7001B-002, "PG&E Standards and Requirements for Plug-In Electric Vehicle Interconnections," included in Appendix B, explains the requirements for installing PEV supply equipment and illustrates the various metering and connection options to serve PEVs.

Additional PEV information can be found in PG&E's Plug-in Electric Vehicles website at http://www.pge.com/electricvehicles/. For questions regarding PG&E's PEV requirements, please contact the Building and Renovation Service Center (BRSC) at 877-743-7782.

This Page Intentionally Left Blank

Section 6
Electric Metering: Residential

Section 6 Electric Metering: Residential

Section 6
Electric Metering: Residential

6.1. Scope

This section of the manual provides the Pacific Gas and Electric Company (PG&E/the Company) service specifications and requirements for residential electric metering. Also, it describes the required locations for those residential meters. This section includes specific information that is **not** covered by the basic requirements in Section 5, "Electric Metering: General."

6.2. Residential Electric Service: Specifications and Requirements

PG&E typically provides electricity for residential and commercial applicants served on a domestic rate schedule with 3-wire, 120/240-volt, single-phase, 60-hertz (Hz), alternating current (ac) service. However, the Company is able to supply 3-wire, 120/208-volt, single-phase, 60 Hz, ac service at some locations. **This service is limited to a service-entrance rating of 225 amperes (amps).** Applicants should contact their local PG&E project coordinators and ask about the type of services that are available for their specific locations.

NOTE: See Table FM-1, "Table FM-1, "Service Planning Office Contact Information," at the front of this manual starting on Page iv, for specific contact numbers listed by area.

6.2.1. Service Classes

The 125-amp-rated panels are classified as Class 100. The 225-amp-rated panels are classified as Class 200.

6.2.2. Test-Bypass Facilities

For single-phase residential installations, test-bypass facilities may be provided, but are not required. However, test-bypass facilities **are** required for the following installations.

- Single-family residential Service Class 320 meter, or residential meter panels that are larger than 225 amp, 120/240 volt, single phase, 3-wire.
- Residential meter panels of any size or phase that supply power to elevators.
- All common and tenant area meter panels of any size or phase, at multi-residential buildings with 2 to 5 units, that supply power to fire alarms or equipment, security alarms, laundry rooms, or significant interior lighting. Significant interior lighting is for hallways, storage rooms or areas, and garage areas.
- All common and tenant area meters at multi-residential buildings with 6 or more units.

6.3. Residential Electric Metering Pedestals

Residential electric meter pedestals, as shown in Figure 6-1, "Residential Electric Metering Pedestal," below, must have a minimum rating of 100 amps and a maximum rating of 200 amps. The pedestal also must meet the requirements specified in the *Electric Utility Service Equipment Requirements Committee (EUSERC)* manual, Drawing 307.

For authorization to attach telephone and cable television terminating facilities to the post, contact your local PG&E project coordinators.

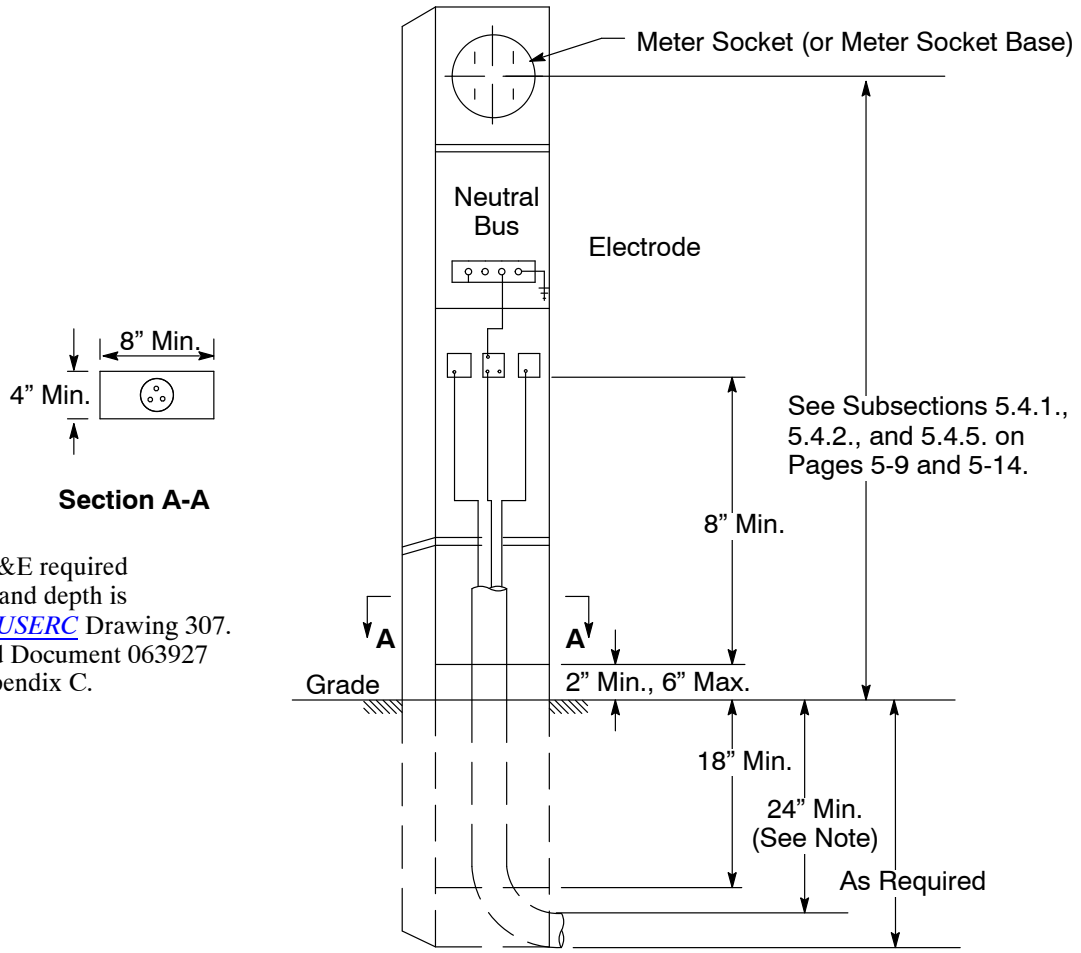

Note: The PG&E required conduit cover and depth is greater than *EUSERC* Drawing 307. See Numbered Document 063927 located in Appendix C.

Figure 6-1
Residential Electric Metering Pedestal

6.4. Meter Locations

An applicant must consult a PG&E project coordinator during the initial construction phase of his or her project to determine the appropriate meter panel and current–transformer cabinet (if installed) location and to ensure that adequate space is provided for the metering equipment. PG&E must review and approve all meter installations **before** the meters are installed.

When meters are installed in a confined or enclosed area, applicants must ensure that they design a way for PG&E personnel to read the meters from the **outside** of the enclosures (e.g., window, opening).

The following four, lettered paragraphs provide location requirements that are applicable to residential metering.

A. Locate the meters and metering equipment either in outdoor, unfenced areas **or** mount them on, or recess them in, an exterior building wall. Do **not** mount metering equipment on, or recess metering equipment in, single family residences or inside garages.

B. Locate the meters and metering equipment in a meter room that is accessible through an outside doorway.

C. For a multifamily or residential building, locate the meters and metering equipment in a meter room or other acceptable location. Typically, an acceptable location will be on the ground floor or basement level of the building. The installation must be accessible directly from a public area.

   An applicant who is planning to install metering equipment on any floor above the ground floor in a multistory building must contact a PG&E project coordinator as early as possible during the initial stages of the project. PG&E must approve of any equipment location that is above the building's ground level.

   NOTE: In large, multifamily, multistory residential buildings (typically if the highest occupied floor is over 75 feet high), PG&E may, at its option, approve grouped meter locations on one or more upper floors.

D. When meters will be installed indoors see the PG&E Bulletin TD-7001B-005, "SmartMeter Electric Network Requirements for Indoor Meter Rooms and High-Rise Building Construction," located in Appendix B.

E. Locate electric meters in the same general area as gas meters when designing single-family residences. For clearance specifications refer to Subsection 5.4.3., "Meter Set Clearance Requirements," on Page 5-10, and Section 2, "Gas Service."

6.4.1. Installing Utility Services to Mobile Homes

A. Typically, PG&E will **not** supply utility services and/or metering facilities to mobile homes that are located or set up in any area, including a mobile home park, where utility service facilities are attached directly to the mobile home **except** under the following circumstances.

   1. The mobile home is fixed in place (i.e., no running gear or wheels). The mobile home must **not** be capable of movement.

   2. The mobile home is installed on a foundation system as described in State of California Title 25, Division 1, Chapter 2, Article 7, Section 1333, "Foundation Systems."

B. PG&E will make an **exception** and install utility services to a location where mobile homes may be moved, including mobile home parks, under certain, specific conditions.

1. The mobile homes must be served by meter pedestals or other PG&E-approved services **and** the meter facilities must be installed at a fixed location.
2. Applicants are responsible for connecting their mobile homes to those fixed locations and to the meter pedestals or other utility facilities.

See Numbered Document 052521, "Electrical Service Requirements for Mobile Home Developments," for more information and for specifications. This PG&E document is included in Appendix C, "Electric and Gas Engineering Documents," and also in PG&E's *Electric Underground Construction Manual*, Volume 1.

6.5. Services

6.5.1. Single Meter: Underground Service

A. Services, 0 Amps Through 225 Amps, Single Phase

Figure 6-2, "Typical Underground Service-Termination Enclosure, Combination Meter-Socket Panel (Residential, 0 Amps–225 Amps)," on Page 6-5, illustrates a single, underground, residential, single-phase meter panel (i.e., 4 terminal for a 120/240-volt service and 5 terminal for a 120/208-volt service).

The numbered items below describe the applicant's requirements when designing these types of underground services.

1. Design the socket and enclosure for underground service conductors.
2. Ensure that enclosures designed for either overhead or underground service entry meet all of the requirements for **both** types of service.
3. Ensure that all cable-termination lugs are suitable to use with both aluminum and copper conductors. The lugs must be compatible with a range of conductor sizes.

   The **minimum** conductor size for services up to 125 amps is #6 American wire gauge (AWG) to 1/0 AWG. The **minimum** conductor size for services rated from 126 amps to 225 amps is #2 AWG to 250 thousand circular mils (kcmil).

4. Use separate, independently supported, service-termination lugs that extend from the socket, and connect to it, using a bus bar. Provide a minimum radial clearance of 1-1/2 inches between the hot bus terminals and the ground or neutral surfaces. The termination facilities cannot be side- or angle-mounted in relation to the front of the panel.
5. Ensure that the socket enclosure has a separate lug in the sealable section. Use this lug exclusively for terminating PG&E's neutral conductor. If the neutral terminal is insulated from the enclosure, PG&E will provide the applicant with a bonding screw or jumper.

6. Ensure that the applicant-owned wiring that extends from the distribution section (i.e., branch circuits) does **not** pass through the sealable section(s).
7. Locate the applicant's service-grounding electrode conductor outside of the sealable section and design it to permit the applicant's grounding system to be isolated easily from PG&E's neutral, when necessary.

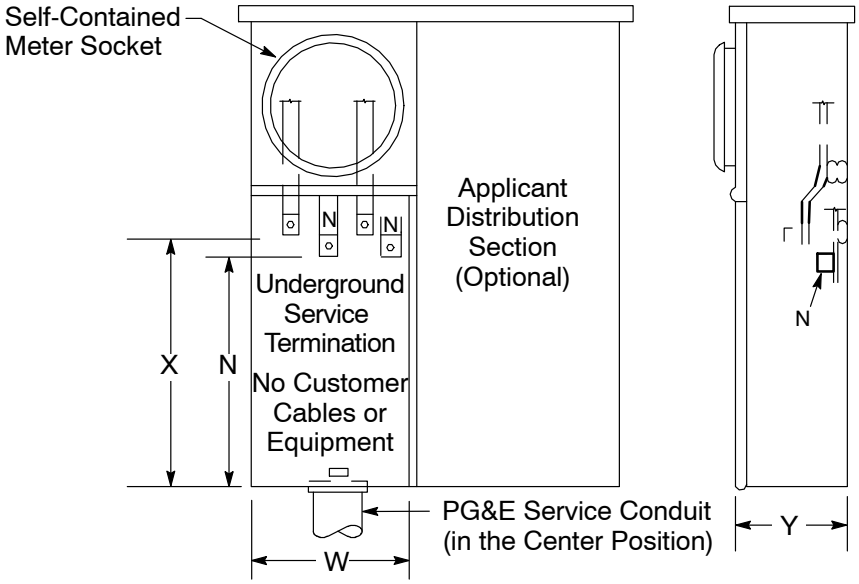

Figure 6-2
Typical Underground Service-Termination Enclosure, Combination Meter-Socket Panel (Residential, 0 Amps–225 Amps)

Table 6-1 Residential (0 Amps–225 Amps) Enclosure

Rating in Amps	X	Y	N	W	Conduit
	Minimum Dimensions (In Inches)				
Up to 125	8	4	6	7	2
126 to 225	11	5-1/2	8-1/2	7	3

B. Services, 226 Amps Through 320 Amps, 120/240 Volts, Single Phase, Residential

Figure 6-3, "Typical Service-Termination Enclosure, Combination Meter-Socket Panel for a Class 320 Meter (Residential, 120/240-Volt, 226-Amp Through 320-Amp Service)," on Page 6-6, illustrates a single, underground, residential, single-phase, 120/240-volt, Class 320-amp meter panel. Applicants must ensure that this panel:

1. Conforms to the requirements for underground-fed, 320-amp metering equipment.
2. Is designed with test-bypass facilities and has provisions for using manual bypass links.
3. Is marked with either a rating of "320 Amperes Continuous" or "400 Amperes Maximum (320 Amperes Continuous)."
4. Is only used with residential services.

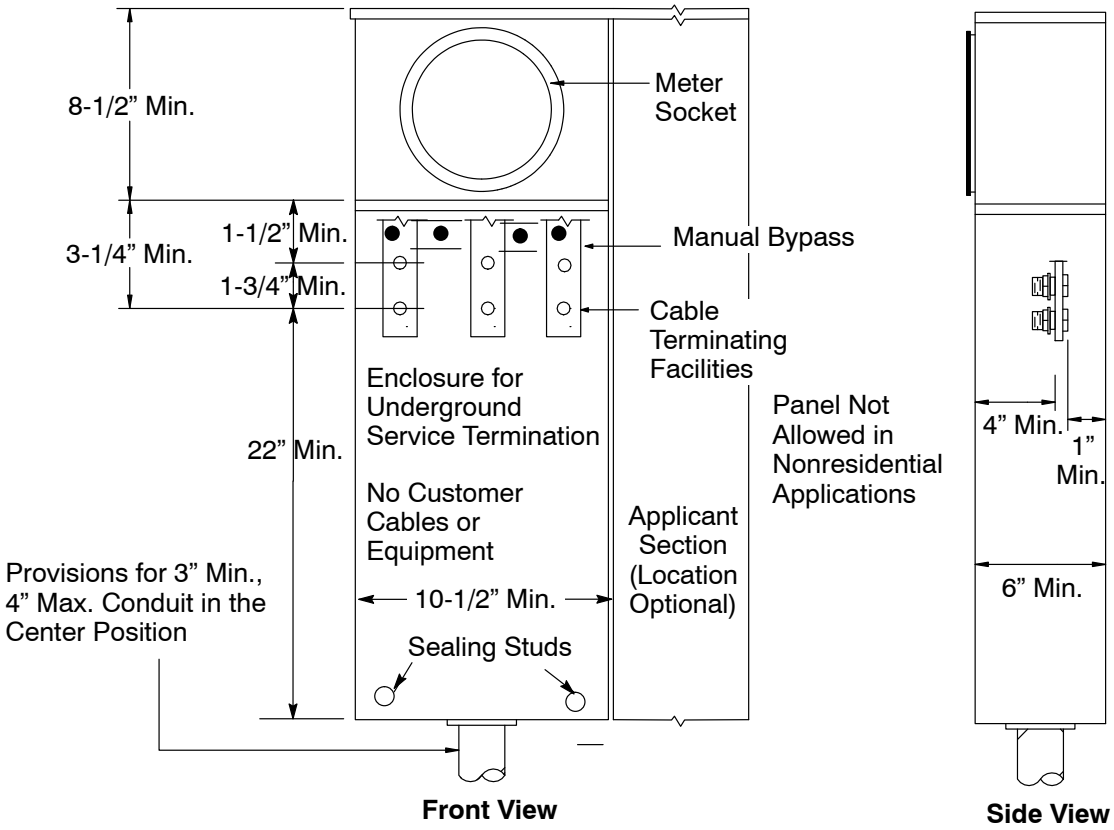

Figure 6-3
Typical Service-Termination Enclosure, Combination Meter-Socket Panel for a Class 320 Meter (Residential, 120/240-Volt, 226-Amp Through 320-Amp Service)

C. Services, 201 Amps Through 800 Amps, Single Phase or 400 Amps Three Phase with Current Transformers

Applicants **must** consult their local PG&E project coordinators when single-phase services exceed 400 amps. Applicants may need to install three-phase service to conform to PG&E's *Electric Rule 2*, "Description of Service," requirements.

Figure 6-4, "Underground Combination Meter and Current-Transformer Cabinet (201 Amps–400 Amps; 1∅ or 3∅)," on Page 6-8, illustrates a single-metered, underground, residential meter panel.

Figure 6-5, "Typical Underground, Separate-Bused, Current-Transformer Cabinet and Safety-Socket Meter Box Assembly, 201 Amps–400 Amps, 3∅ and 201 Amps–800 Amps, 1∅," on Page 6-8, illustrates how service and metering components can be separated into individual enclosures.

NOTE: See Section 9, "Electric Metering: Components," for details about the components in Figure 6-4 and Figure 6-5.

Applicants must ensure their conductors are installed before PG&E installs the current transformers. Also, applicants must ensure that their service-entrance conductors and equipment meet the following requirements.

1. The current transformer mounting base must include termination bolts, Belleville washers, and nuts on the line and load sides necessary to connect the PG&E current transformers and service conductors to the line side.
2. The conductor must enter the current-transformer cabinet at or within 2 inches of the top or bottom and leave the cabinet **either** at or within 2 inches of the top or bottom of the opposite end of the cabinet **or** enter and exit at or within 2 inches of the same end of the current-transformer cabinet. Route the conductor carefully when using this option.

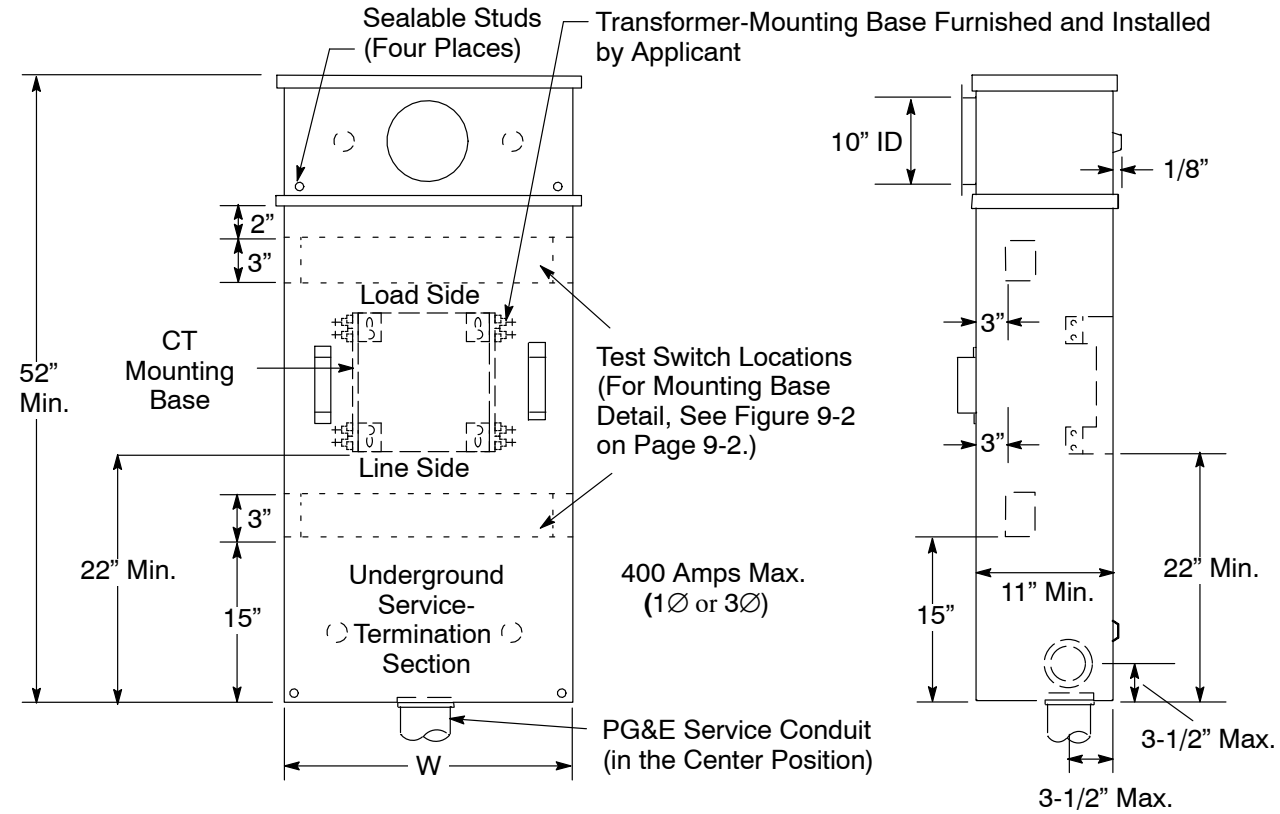

W Dimensions:
3-Wire 1∅ = 24” Min.
4-Wire 3∅ = 36” Min.

Figure 6-4
Underground Combination Meter and Current-Transformer Cabinet (201 Amps–400 Amps, 1∅ or 3∅)

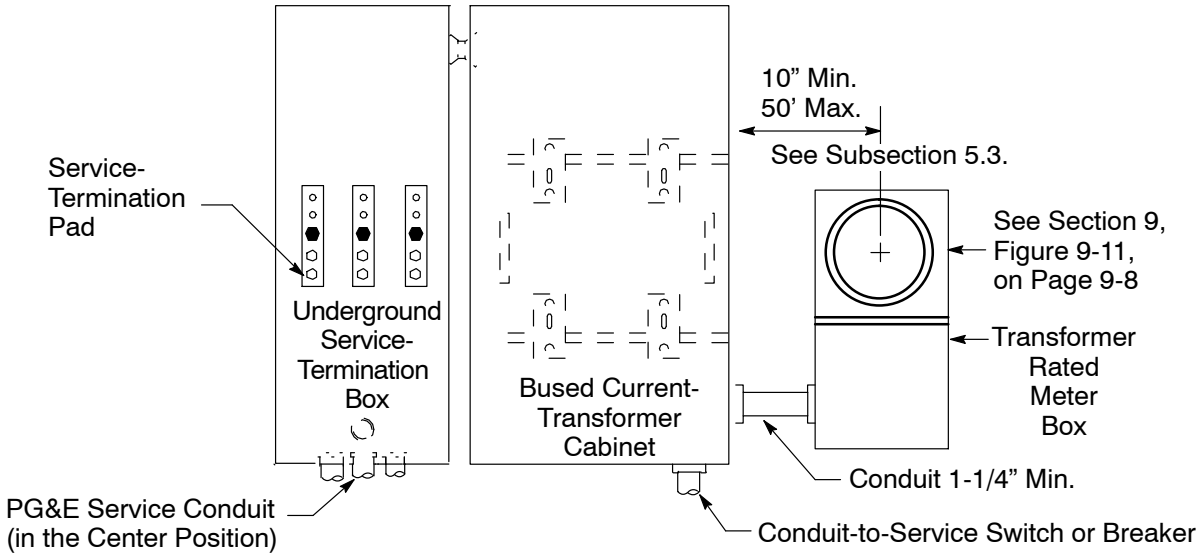

Figure 6-5
Typical Underground, Separate-Bused, Current-Transformer Cabinet and Safety-Socket Meter Box Assembly, (201 Amps–400 Amps, 3∅ and 201 Amps–800 Amps, 1∅)

6.5.2. Single Meter: Overhead Service

A. Services, 0 Amps Through 225 Amps, Single Phase

Figure 6-6, “Individual Meter Socket,” and Figure 6-7, “Combination Meter Socket Load Center,” both on Page 6-9, illustrate the 4-terminal, 120/240-volt and 5-terminal, 120/208-volt overhead service and meter panel.

Enclosures designed for a combination of overhead and underground conductors must meet **all** of the requirements for both types of conductor entry.

B. Services, 226 Amps Through 320 Amps, 120/240 Volts, Single Phase

Applicants must ensure that this panel:

1. Conforms to the requirements for overhead-fed, 320-amp metering equipment.
2. Is designed with test-bypass facilities and has provisions for using manual bypass links.
3. Is marked with either a rating of “320 Amperes Continuous” or “400 Amperes Maximum (320 Amperes Continuous).”
4. Is only used with residential services.

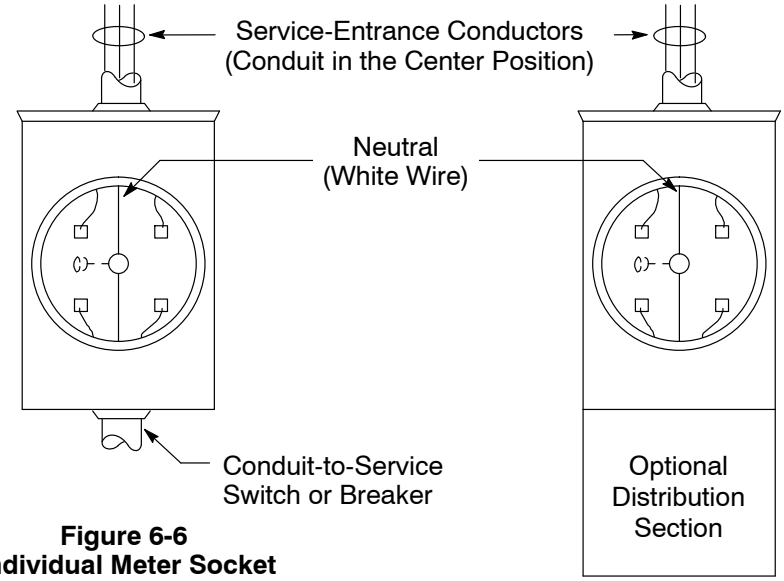

Figure 6-6
Individual Meter Socket

Figure 6-7
Combination Meter Socket Load Center

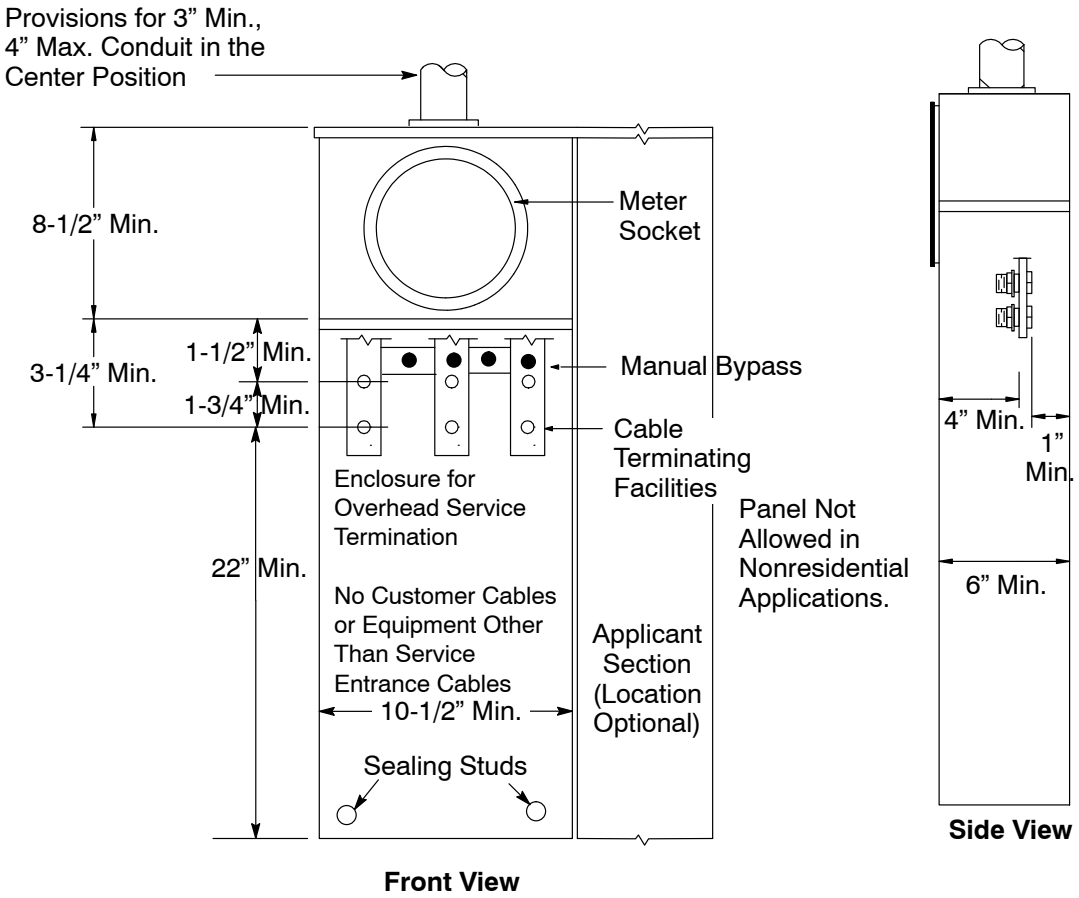

Figure 6-8
Typical Service-Termination Enclosure, Combination Meter Socket Panel for a Class 320 Meter (Residential, 120/240-Volt, 226-Amp Through 320-Amp Service)

C. Services, 201 Amps Through 600 Amps, Single Phase, or 400 Amps, Three Phase, with Current Transformer

Applicants **should** consult with a PG&E project coordinator before installing single-phase services that exceed 400 amps. Applicants may need to install three-phase service to conform to PG&E’s *Electric Rule 2* requirements.

Figure 6-9, “Overhead-Fed Combination Meter and Current-Transformer Cabinet, (201 Amps–400 Amps, 3∅ and 201 Amps–600 Amps, 1∅),” on Page 6-11, illustrates a single-metered, overhead, residential meter panel.

Figure 6-10, “Overhead-Fed, Separate-Bused, Current-Transformer Cabinet and Meter Box (201 Amps–400 Amps, 3∅ and 201 Amps–600 Amps, 1∅),” also on Page 6-12, illustrates a single, overhead, residential, single-phase or three-phase service and meter panel with current transformers.

NOTE: See Section 9, for details about the components in Figure 6-9 and Figure 6-10.

Applicants must ensure their conductors are installed before PG&E installs the current-transformers. Also applicants must connect the service entrance conductors to the line and load sides of the current-transformer mounting base.

1. The current transformer mounting base must include termination bolts, Belleville washers, and nuts on the line and load sides necessary to connect the PG&E current transformers. See Section 9, for details about these internal components.
2. The conductor must enter the current-transformer cabinet at or within 2 inches of the top or bottom and leave the cabinet **either** at or within 2 inches of the top or bottom of the opposite end of the cabinet **or** enter and exit at or within 2 inches of the same end of the cabinet. **Applicants must ensure that the conductor is routed carefully when using this option.**

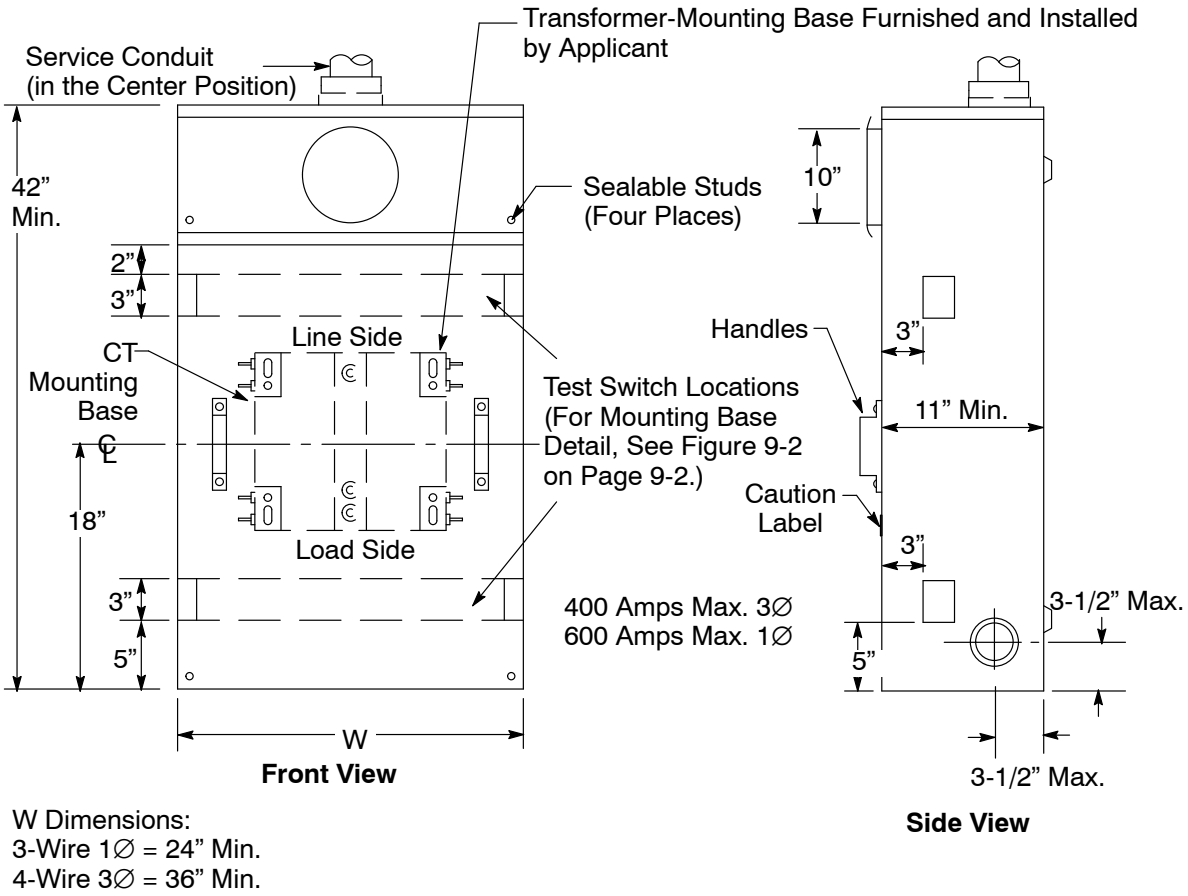

Figure 6-9
Overhead-Fed Combination Meter and Current-Transformer Cabinet, (201 Amps–400 Amps, 3∅ and 201 Amps–600 Amps, 1∅)

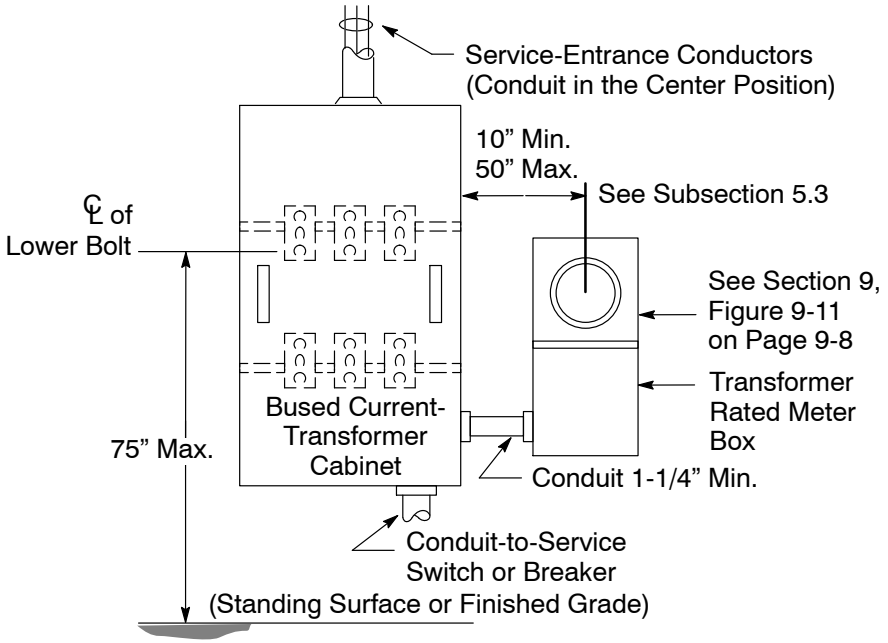

Figure 6-10
Overhead-Fed, Separate-Bused, Current-Transformer Cabinet and Meter Box
(201 Amps–400 Amps, 3∅ and 201 Amps–600 Amps, 1∅)

6.5.3. Multiple Meters

PG&E requires grouped, single-meter installations for multifamily residential buildings.

This requirement excludes row-type condominiums where each unit is considered a single-family residence and is metered individually. Row-type condominiums must meet the applicable metering requirements described in the following subsections.

A. Grouped-Meter Installation Ampacity Ratings

The ampacity rating of a grouped-meter installation must be as described below.

1. For installations **without** a main switch or breaker, the service rating will be the rating of the electrical enclosure or service termination section, pull can, or other service-termination enclosure where PG&E terminates and connects its supply facilities and conductors. Also, see Subsection 1.14.B. on Page 1-11.
2. For installations **with** a main switch or breaker, the rating of the service to be supplied is the rating of the termination section, pull can, service section, or main service switch continuous current rating, typically whichever is greater. Also, see Subsection 1.14.A. on Page 1-11.

B. Grouped Meter-Socket Spacing and Socket Blank-Off Covers

PG&E requires a 7-1/2-inch horizontal and 8-1/2-inch **minimum** vertical center spacing between meter sockets. The Company will provide and install nonconductive, meter-socket, blank-off covers **before** energizing the meter panels with vacant meter sockets. PG&E will **not** energize meter panels and sockets unless blank-off meter covers are installed.

C. Individual Meter Sockets With Wiring Gutters

PG&E will accept meter sockets with wiring gutters, as shown in Figure 6-11, "Meter Sockets With Wiring Gutters," on Page 6-13, only when applicants either are updating and/or adding on to existing installations.

PG&E will accept individual meter sockets in combination with a wiring gutter **only** for an applicant's service-entrance conductors and **only** when unmetered service-entrance conductors and metered-load conductors are **not** installed in the same conduit, raceway, or wiring gutter.

To conserve space and lower equipment costs, applicants should consider installing a combination multimeter, as described in Subsection 6.5.3.D., "Combination Multimeter Installation," on Page 6-14. Or, applicants could install a meter trough, as described in Subsection 6.5.3.E., "Meter Trough Installations," on Page 6-17.

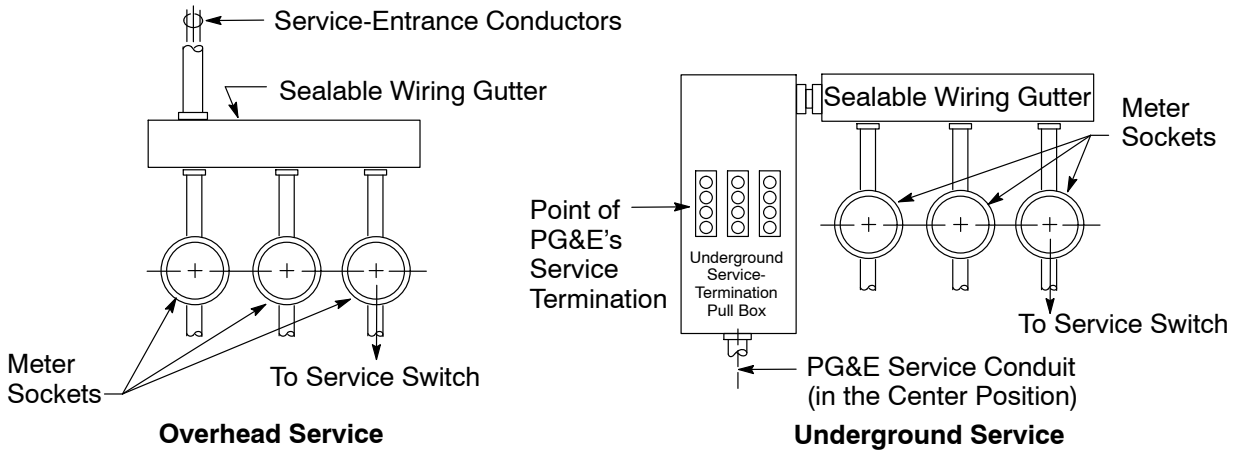

Figure 6-11
Meter Sockets With Wiring Gutters

D. Combination Multimeter Installation

A combination multimeter installation consists of the following equipment.

- A main switch (if one is installed or required by local jurisdiction)
- Unmetered wiring gutter
- Multiple meter sockets
- An appropriate number of circuit breakers

See Section 5, Subsection 5.7., "Main Service Disconnects and Switching Sequences," on Page 5-21, for more information on disconnects and switches.

Examples of PG&E-approved, combination, multimeter installations are illustrated in Figure 6-12, "Typical, Manufactured, Combination, Multimeter Installation: Seven Meters or More," on Page 6-15, and Figure 6-13, "Clearances for a Typical, Manufactured, Combination, Multimeter Installation," on Page 6-16.

Applicants must ensure that all multimeter installations meet the following requirements.

1. Individually meter multiple apartments in one building. Separate metered and unmetered conductors.
2. Use factory (or factory-equivalent), harness-style wiring **or** bus between the unmetered wiring gutter and the line terminals of each meter socket. Harness-style wiring or bus also must be used between the load terminals of each meter socket and the line side of the corresponding circuit breaker.
3. Ensure that the panels are designed to permit any individual meter socket block or jaw assembly to be replaced. Applicants must **not** mount more than two meters on a single, removable panel. Removable meter-panel covers must **not** exceed 6 square feet in area.
4. Ensure that the panel's design and construction meets the clearance requirements provided in Figure 6-13 and in Table 6-2, "Dimension Specifications for Multimeter Installations," on Page 6-16.
5. Increase Dimension B, shown in Figure 6-13 on Page 6-16, by the amount that the main switch door, including the operating handle, reduces the clearance when opened 90°.
6. Ensure that panels are removable so that PG&E personnel can perform wiring inspections.

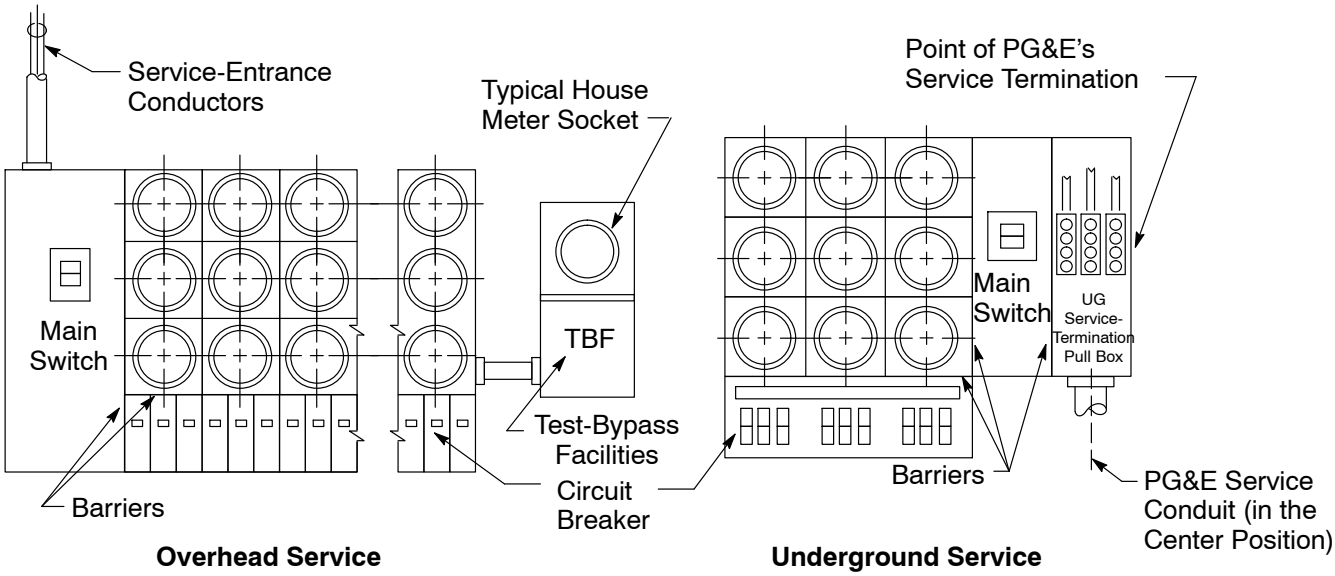

Figure 6-12
Typical, Manufactured, Combination, Multimeter Installation: Seven Meters or More

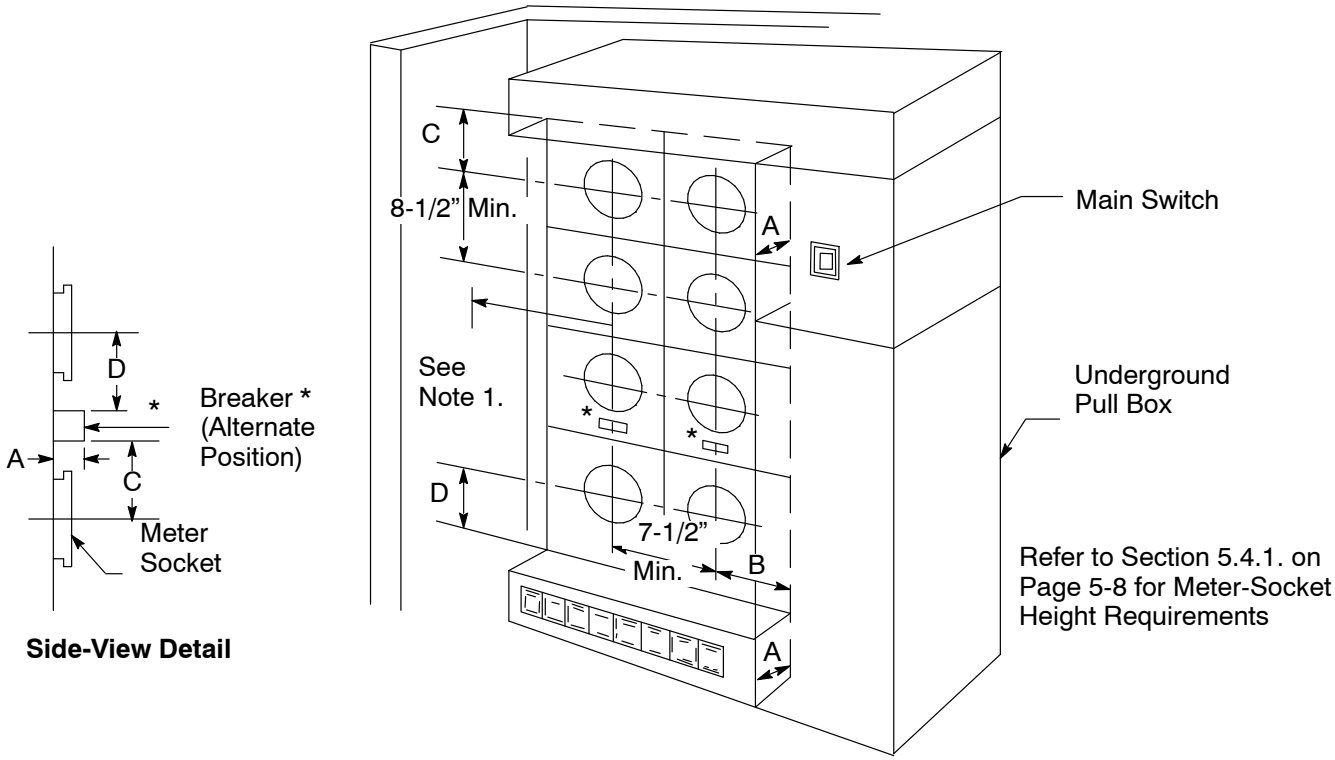

Figure 6-13
Clearances for a Typical, Manufactured, Combination, Multimeter Installation

Notes in reference to Figure 6-13.

1. Where an adjacent wall or other obstruction extends more than 11-inches perpendicular from the face of the meter panel, a 10-inch minimum dimension to the meter socket axis is required. For obstructions extending 11 inches or less from the meter panel, the side clearance must conform to that of Dimension B.

Table 6-2 Dimension Specifications for Multimeter Installations

A–Protrusions (in Inches)	B	C	D
	All Measurements Are Minimum Dimension in Inches		
0 (No Protrusion)	3-3/4	4	4-3/4
Greater Than 0 to 1-1/8	4-1/4	4	4-3/4
Greater Than 1-1/8 to 2	4-1/4	4-1/4	6-1/4
Greater Than 2 to 4	6-1/4	4-1/4	8
Greater Than 4 to 11 (Maximum)	6-1/4	10	8

E. Meter Trough Installations

PG&E accepts meter trough installations using ring-type sockets only for reconstructing and adding to existing installations. In addition to meeting the general requirements for meter sockets, applicants must ensure that meter troughs meet the following general requirements.

1. Where there are four, five, or six sockets in one trough, the incoming service conductors must terminate on a main bus that is supported independently of the socket jaw assembly.
2. The panel design must permit individual, meter-socket blocks or jaw assemblies to be replaced individually. Applicants must **not** mount more than two meters on a single, removable front panel.
3. Metered and unmetered conductors must be separated, clearly showing that the entire load is being metered.
4. The panels must be removable so that wiring inspections can be performed.

Figure 6-14 and Figure 6-15, both located below, illustrate meter trough installations served by underground or overhead service.

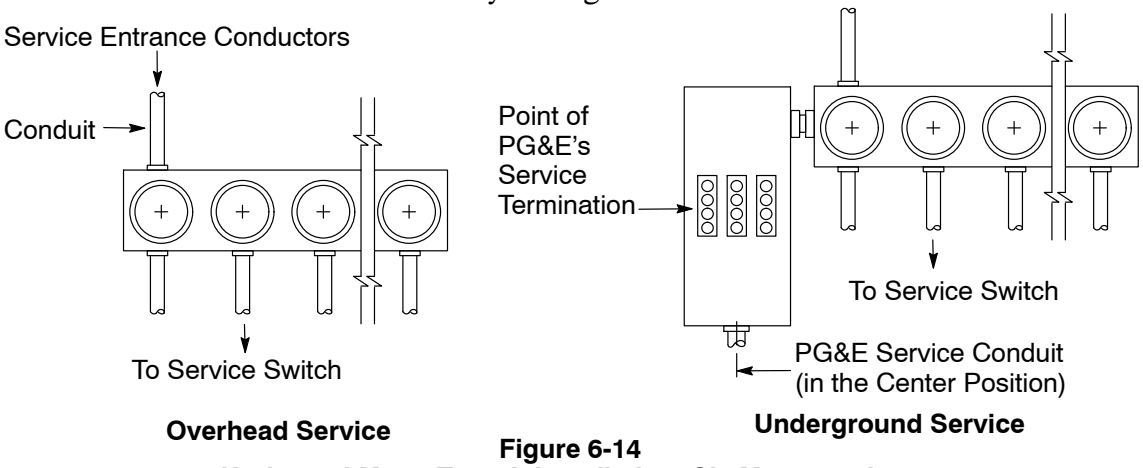

Figure 6-14
Horizontal Meter Trough Installation: Six Meters or Less

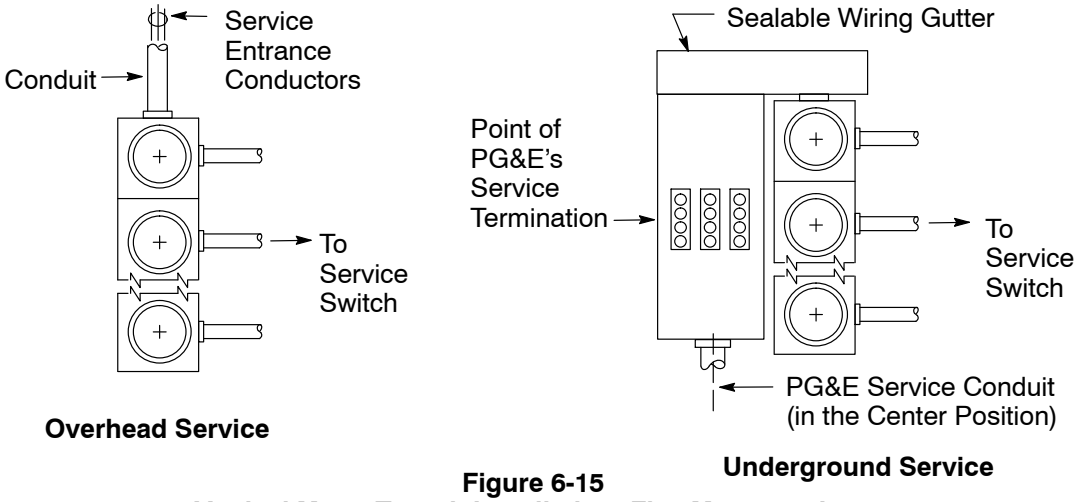

Figure 6-15
Vertical Meter Trough Installation: Five Meters or Less

This Page Intentionally Left Blank

Section 7
Electric Metering: Commercial, Industrial, And Agricultural

Section 7 Electric Metering: Commercial, Industrial and agricultural

Section 7
Electric Metering: Commercial, Industrial, and Agricultural

7.1. Scope

This section of the manual provides the Pacific Gas and Electric Company (PG&E/the Company) service specifications and requirements for commercial, industrial, and agricultural electric metering. Also, it describes the required locations for these nonresidential meters. This section includes specific information that is **not** covered by the basic requirements in Section 5, "Electric Metering: General."

NOTE: Residential meter panels rated for 320 amperes (amps) shown in Section 6 "Electric Metering: Residential," are not allowed to be used for nonresidential (e.g., commercial, industrial, and agricultural) applications.

7.2. Service Specifications and Requirements

The following three subsections describe service specifications and requirements for commercial, industrial, and agricultural electric meters.

7.2.1. Permitted Types of Electric Service

PG&E does **not** permit overhead service connections in areas zoned for underground service by local ordinance, or where underground service is required by California Public Utility Commission- (CPUC-) approved tariffs.

7.2.2. Required Test-Bypass Facilities

Test-bypass facilities are required, regardless of the panel ampacity, for both single-phase and three-phase, nonresidential installations. Applicants must furnish, install, and maintain a meter socket with PG&E-approved, manual, test-bypass facilities. This equipment also is used for the following types of services.

- All three-phase, nonresidential services **without exception**.
- All single-phase, nonresidential services. See the exceptions in Subsection 7.2.3., "Required Approvals for Meter Equipment Without Test-Bypass Facilities," on Page 7-2.

Refer to Figure 7-1, "Bused, Safety-Socket Meter Box for Self-Contained Metering (0 Amps–125 Amps)," on Page 7-4, and Figure 7-2, "Bused, Safety-Socket Meter Box for Self-Contained Metering (126 Amps–200 Amps)," on Page 7-5.

7.2.3. Required Approvals for Meter Equipment Without Test-Bypass Facilities

PG&E requires an approval **before** installing meter equipment without test-bypass facilities. If approved, the meter equipment may be exempt only when all of the conditions are met in Item 7.2.3.A. or Item 7.2.3.B., both below.

A. Single-phase, nonresidential service when **all** of the three following conditions are met.

   1. The main disconnect switch's rating does **not** exceed 200 amps.
   2. Service to another meter or service will **not** be interrupted when de-energizing the meter socket without test-bypass facilities.
   3. The metered service is used **exclusively** for temporary power or nighttime lighting loads.

B. Single-phase, 120/240-volt residential customers who establish a new agricultural service, or have an existing agricultural service, and that service is connected to a residential, main-service electric panel may be exempt from the test-bypass requirement only when **all** of the three following conditions are met.

   1. The residential main meter panel and main disconnect switch's rating does **not** exceed 225 amps.
   2. The customer agrees to short interruptions of service required when PG&E tests and maintains their meters.
   3. The aggregated total size of pump motors attached to the agricultural service do **not** exceed 7-1/2 horsepower (hp).

7.2.4. Meter Locations

Applicants must consult their local PG&E project coordinators during the initial construction phase of their projects to determine the appropriate meter and current-transformer cabinet locations and to ensure that adequate space is provided for the metering equipment. PG&E must review and approve all metering equipment installations **before** they are installed.

Additionally, the following **specific** location requirements apply to nonresidential metering.

A. Applicants must locate meters on exterior, ground-floor walls or other permanent structures nearest PG&E's distribution facilities. When outdoor meter locations are **not** practical, PG&E will approve interior locations if they are accessible during PG&E's typical working hours **and** if the interior location meets PG&E's access requirements, as described in Subsection 5.3., "Electric Meters: General Location Requirements," on Page 5-4.

B. Typically, applicants **must** group meters for multiple-occupancy buildings at one common location; however, PG&E allows the following **exceptions** to this requirement.

1. PG&E may permit applicants to have individual meters located on their premises if the installations comply with all applicable codes. When buildings contain unmetered wiring, applicants must place that wiring in PG&E-approved conduit and/or in sealable wireways.
2. In high-rise buildings (e.g., typically if the highest-occupied floor is over 75 feet high), PG&E has the option to approve grouped-meter locations on one or more floors.
3. PG&E does not permit transformer-rated metering equipment to be located at a point away from the service disconnect means, allowing the applicants to separate the meter and metering transformers. **Any exceptions to this requirement must be approved** by the local PG&E meter shop. Meter shop employees must approve remote meter locations **before** applicants locate meters away from (i.e., remote from) the PG&E service termination point. Also, applicants must provide clearances and working space, as described in Subsection 5.4., "Meter Height Clearances, Enclosures, and Protection," on Page 5-8, for both the meter and metering transformer installations.

Applicants must supply and install rigid steel conduit for the meter wiring between the meter and the metering transformers. The conduit must be 1-1/4-inch minimum diameter and must be limited to 50 circuit feet with a maximum of three 90° bends, **unless** sealable, accessible, exposed conduits are furnished.

When meters are separated by more than 50 circuit feet, PG&E requires a special review and approval for the installation.

7.2.5. Services, 0 Amps Through 200 Amps, Single Applicant, Overhead and Underground

Applicants must meet the following requirements when installing services.

A. PG&E's service conductors must be pulled into the enclosure and connected to the bypass-test facility's line-termination lugs.

B. The load conductors must be routed and formed to allow PG&E to pull their service laterals without encountering any obstructions.

C. For overhead service, applicants must provide and install service-entrance conductors from the weatherhead to the enclosure. Applicants must connect the conductors to the bypass-test facility's line-termination lugs.

D. The right side, test-bypass blocks (i.e., two poles) are identified as the power leg (i.e., high leg or stinger leg) for metering three-phase, 4-wire, delta service. The power leg is identified by using the color orange. Orange tape is typically used.

E. All section covers can be removed independently; however, after the meter is in place, the upper cover must **not** be removable. After the meter is in place, the lower cover must be sealable.

F. For meter socket jaw requirements, see Section 5, Subsection 5.6., "Meter Types and Connections," on Page 5-16.

G. Install range-taking lugs from #6 American wire gauge (AWG) to 1/0 AWG for services up to 125 amps, and #2 AWG to 250 thousand circular miles (kcmil) for services rated from 126 amps through 200 amps.

H. For all agricultural overhead services, install a cable protector around the service-entrance conductors entering the meter panel. Order using Material Code 382034 or 382045, found in Numbered Document 062288, “Underground Conduits,” Table 14 on Page 8 (in Appendix C).

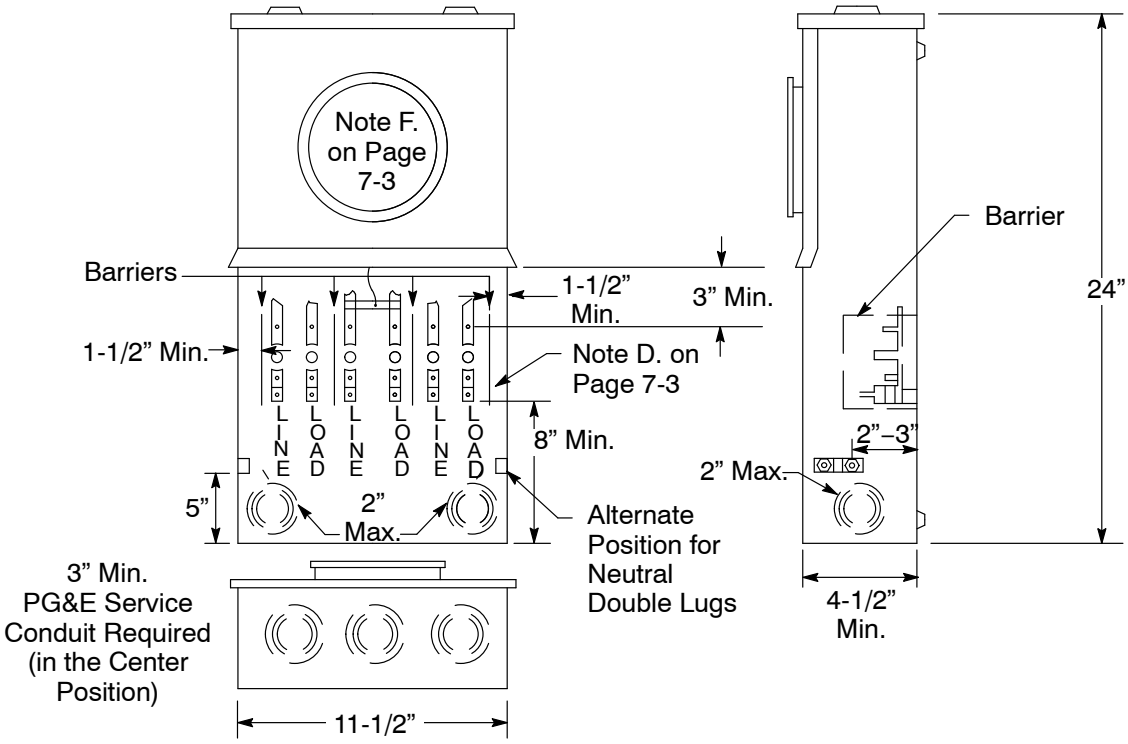

Figure 7-1
Bused, Safety-Socket Meter Box for Self-Contained Metering (0 Amps–125 Amps)

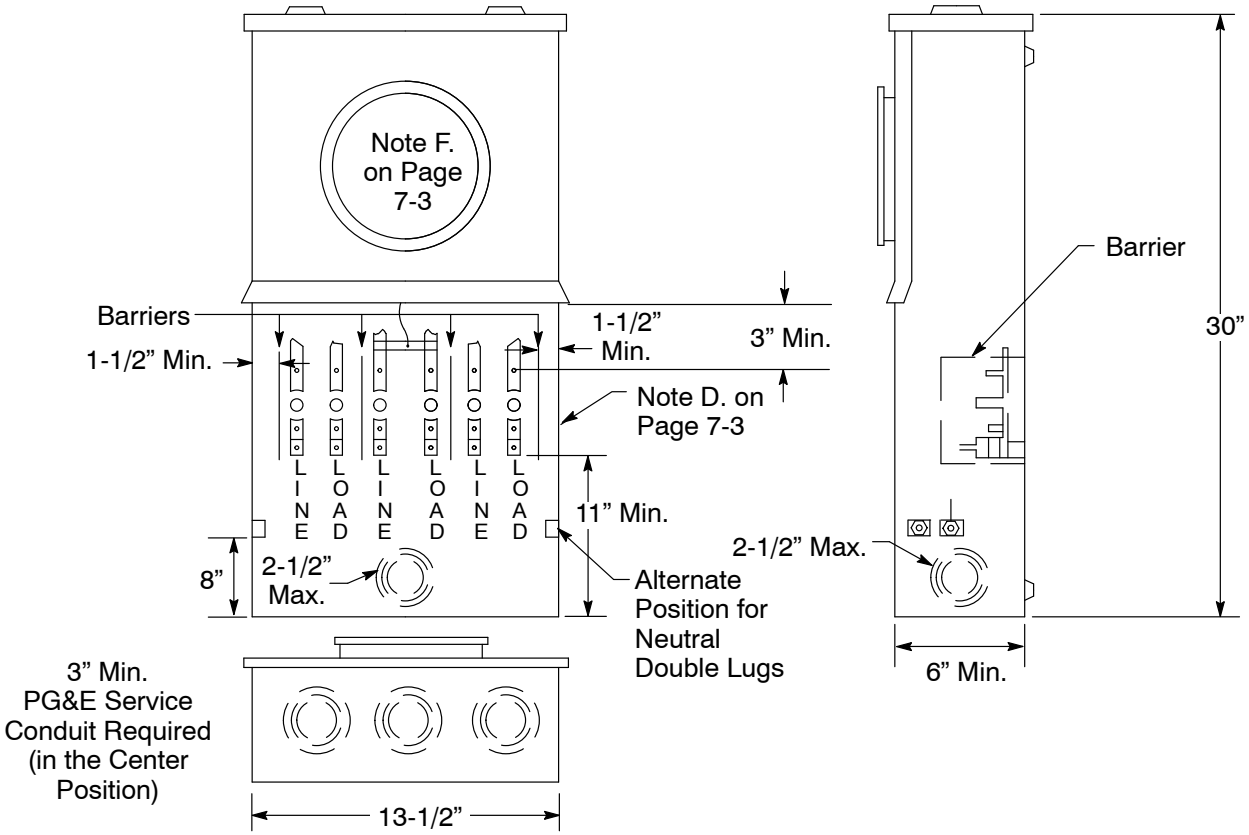

Figure 7-2
Bused, Safety-Socket Meter Box for Self-Contained Metering (126 Amps–200 Amps)

7.2.6. Services, Over 200 Amps, Single Applicant, Underground

Applicants must meet the following requirements when installing services and equipment.

A. Services, 201 Amps Through 400 Amps, Three Phase, and 201 Amps Through 600 Amps, Single Phase

1. When planning a single, underground, single-phase or three-phase service, applicants must furnish, install, own, and maintain combination meter and current-transformer cabinets, as illustrated in Figure 7-3, "Underground Combination Meter and Current-Transformer Cabinet (201 Amps–400 Amps, 1∅ or 3∅)," on Page 7-7.

   NOTE: See Section 9, "Electric Metering: Components," for details about internal components.

2. The current transformer mounting base must include termination bolts, Belleville washers, and nuts on the line and load sides necessary to connect the current transformers and the PG&E service conductors to the line side.

3. An applicant's service-entrance conductors must be installed **before** PG&E installs the current-transformers. Also, the conductors must leave the cabinet by one of the following two methods:
   - Above the current-transformer mounting base.
   - At or within 2 inches of the bottom of the underground termination pull section.

   One set of service-entrance conductors must exit (leave) the current-transformer cabinet either at or within 2 inches of the top or bottom of the opposite end of the cabinet **or** exit at or within 2 inches of the same end of the cabinet. **Applicants must ensure that the conductors are routed carefully when using this option.**

   Applicants must ensure that one set of load conductors are routed and formed to allow PG&E to pull their service laterals without encountering any obstructions.
4. Applicants must ensure that provisions are made for the underground service neutral when installing an insulated, bondable termination in the current-transformer cabinet.
5. Applicants must mark the power leg (i.e., high leg or stinger leg) of a 240/120-volt, three-phase, 4-wire delta service by using the color orange. This is for metering purposes. Orange tape is typically used.
6. Applicants must ensure that cabinets meet the following requirements.
   - All panels and covers must be sealable and all securing screws must be captive.
   - Outdoor current transformer (CT) cabinets are weatherproof.
   - A neutral is bonded to the enclosure.
   - CT cabinets are **not** used as splicing chambers and CTs are **not** tapped off to supply other meters or used for other purposes.

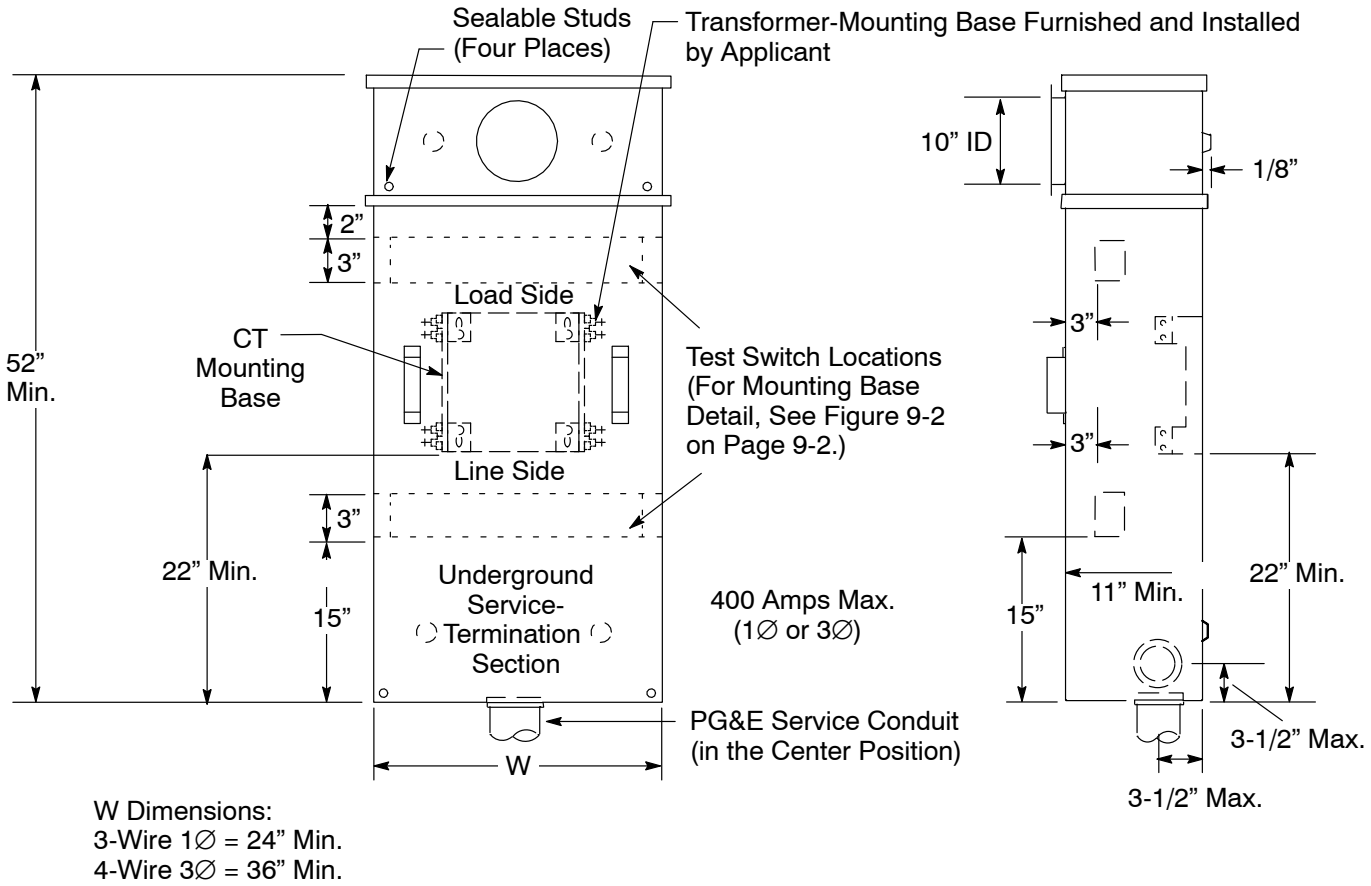

Figure 7-3
Underground Combination Meter and Current-Transformer Cabinet
(201 Amps–400 Amps, 1∅ or 3∅)

B. Services, 201 Amps Through 400 Amps, Three Phase, and 201 Amps Through 600 Amps, Single Phase, Current-Transformer Metering in Bused, Current-Transformer Cabinets

1. When applicants meter a single, underground service using current transformers, they must furnish, install, own, and maintain underground, service-termination pull boxes with separate, current-transformer cabinets and meter box, as illustrated in Figure 7-4, “Separate-Bused Current-Transformer Cabinet and Meter Box With Underground Service-Termination Pull Box
   (201 Amps–400 Amps, 3∅, and 201 Amps–600 Amps, 1∅),” on Page 7-8.
   NOTE: See Section 9, for details about internal components.
2. Applicants must furnish and connect the service-entrance conductors to the line and load sides of the current-transformer mounting base and to the load side of the termination facilities in the underground, service-termination pull box. The applicants service-entrance conductor must be installed before PG&E installs the current transformers.

3. The current-transformer mounting base must include termination bolts, Belleville washers, and nuts on the line and load sides necessary to connect the PG&E current transformers.
4. PG&E pulls and terminates its service-entrance conductor directly to the applicant-furnished, service-termination facility in the underground service-termination pull box.
5. Service-entrance conductors must enter current-transformer cabinets either at or within 2 inches of the top or bottom and leave the cabinet either at or within 2 inches of the top or bottom of the opposite end of the cabinet **or** enter and exit at or within 2 inches of the same end of the cabinet. **Applicants must ensure that the conductors are routed carefully when using this option.**

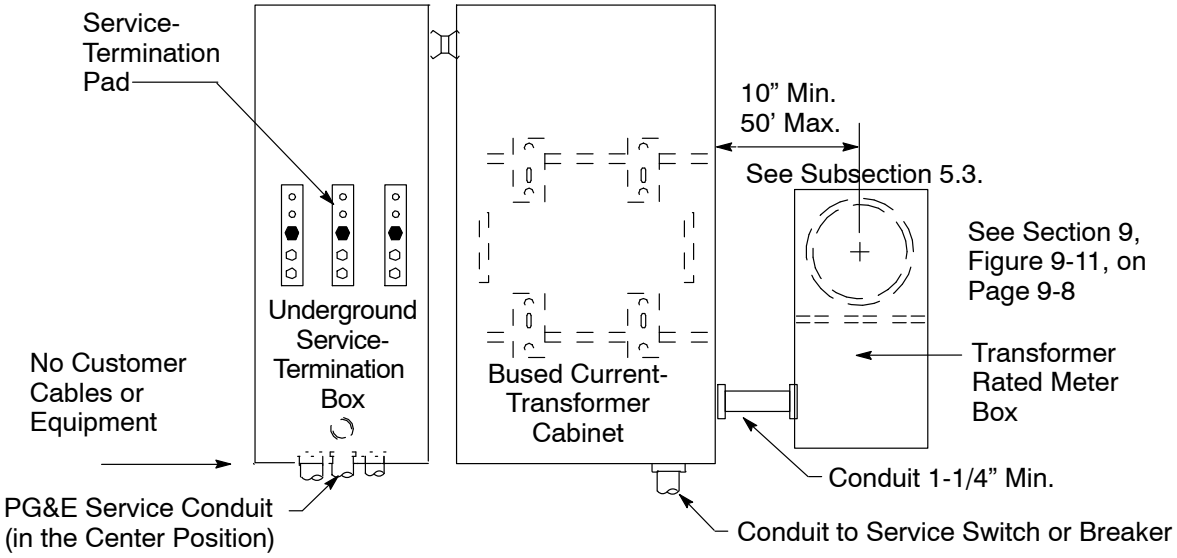

Figure 7-4
Separate-Bused Current-Transformer Cabinet and Meter Box
With Underground Service-Termination Pull Box
(201 Amps–400 Amps, 3∅ and 201 Amps–600 Amps, 1∅)

C. Services, 201 Amps and Above, Current-Transformer Metering in Switchboard Service Sections

1. When applicants meter a single underground service using current transformers, they must furnish, install, own, and maintain a switchboard service section and facilities for terminating underground service conductors.
2. Figure 7-5, “Switchboard Pull Section,” Figure 7-6, “Separate Pull Box,” and Figure 7-7, “Bottom-Fed Service Section,” all on Page 7-9, illustrate typical arrangements of the switchboard service sections that are used in conjunction with a pull section or pull box for underground service-conductor termination.

3. PG&E pulls and terminates its service conductors directly to the applicant-furnished service-termination facilities in the underground service-termination pull section, pull box, or service section.

   NOTE: See Section 10, "Electric Switchboards: 0 Volts Through 600 Volts," for details.

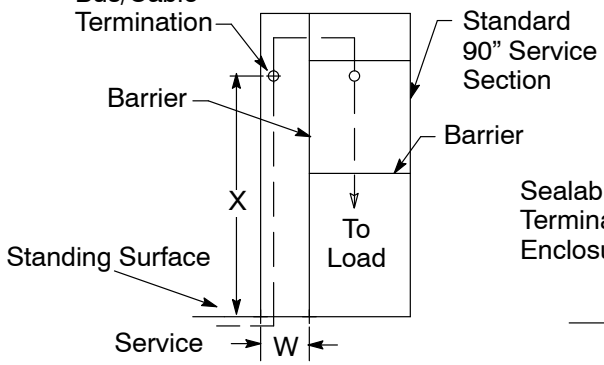

Figure 7-5
Switchboard Pull Section

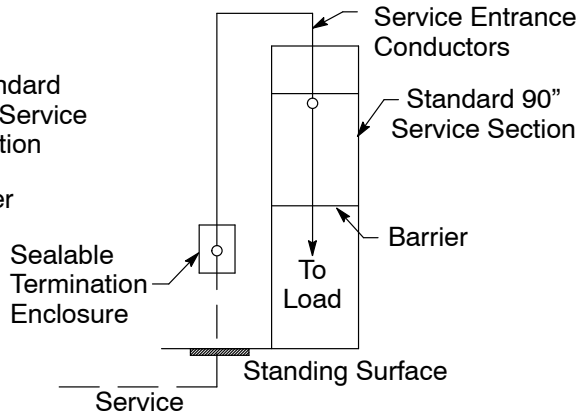

Figure 7-6
Separate Pull Box

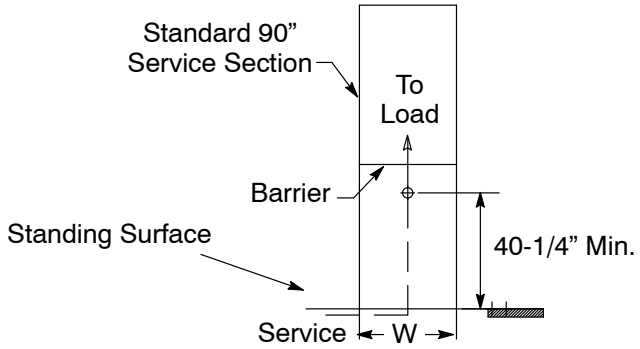

Figure 7-7
Bottom-Fed Service Section

7.2.7. Services, Over 200 Amps, Single Applicant, Overhead

Applicants must meet the following requirements when installing single-applicant, overhead services that are over 200 amps.

NOTE: For all agricultural overhead services, install a cable protector around the service-entrance conductors entering the meter panel. Order using Material Code 382034 or 382045, found in Numbered Document 062288, Table 14, on Page 8 (in Appendix C).

A. Services, 201 Amps Through 400 Amps, Three Phase, and 201 Amps Through 600 Amps, Single Phase

1. When installing a single, overhead, single-phase or three-phase service, applicants must furnish, install, own, and maintain combination meter and current-transformer cabinets, as illustrated in Figure 7-8, "Overhead-Fed Combination Meter and Current-Transformer Cabinet, (201 Amps–400 Amps, 3∅ and 201 Amps–600 Amps, 1∅)," shown on Page 7-11. See Section 9 for details about internal components.
2. An applicant's service-entrance conductors must be installed before PG&E installs the current-transformers. Also applicants must connect the service entrance conductors to the line and load sides of the current-transformer mounting base.
3. The current-transformer mounting base must include termination bolts, Bellevue washers, and nuts on the line and load sides necessary to connect the current transformers. See Section 9 for details about these internal components.
4. Service-entrance conductors must enter the current-transformer cabinets either at or within 2 inches of the top and leave the cabinet either at or within 2 inches of the top or bottom of the opposite end of the cabinet **or** enter and exit at or within 2 inches of the same end of the cabinet. **Applicants must ensure that the conductors are routed carefully when using this option.**
5. Applicants must ensure that cabinets meet the following requirements.
   - All panels and covers must be sealable and all securing screws must be captive.
   - Outdoor CT cabinets are weatherproof.
   - A neutral is bonded to the enclosure.
   - CT cabinets are **not** used as splicing chambers and CTs are **not** tapped off to supply other meters or used for any other purposes.

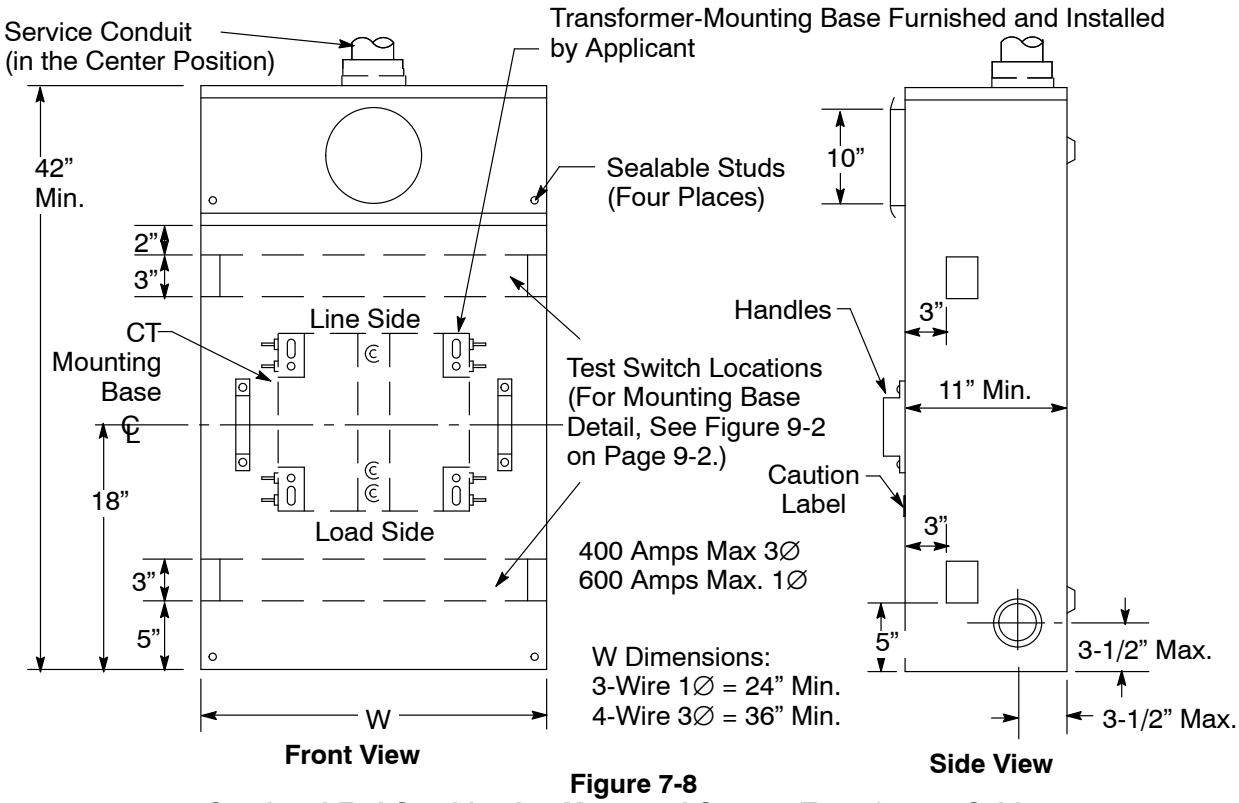

Figure 7-8
Overhead-Fed Combination Meter and Current-Transformer Cabinet,
(201 Amps–400 Amps, 3∅ and 201 Amps–600 Amps, 1∅)

B. Services, 201 Amps Through 400 Amps, Three Phase, and 201 Amps Through 600 Amps, Single Phase, Current-Transformer Metering

1. When installing a single, overhead, single-phase or three-phase service using current transformers, applicants must furnish, install, and maintain separate current-transformer cabinets and meter boxes, as illustrated in Figure 7-9, “Overhead-Fed, Separate-Bused, Current-Transformer Cabinet and Safety-Socket Meter Box (201 Amps–400 Amps, 3∅, and 201 Amps–600 Amps, 1∅),” on Page 7-12. Also required are service-entrance conductors, conduit, and weatherhead to the point of attachment to PG&E’s overhead service.

   NOTE: See Section 9, for details about internal components.

2. An applicant’s conductors must be installed before PG&E installs the current-transformers. Also applicants must connect the service-entrance conductors to the line and load sides of the current-transformer mounting bus bars.

3. The current transformer bus bars must include termination bolts, Belleville washers, and nuts on the line and load sides necessary to connect the current transformers. See Section 9, for details about these internal components.

4. Service-entrance conductors must enter current-transformer cabinets either at or within 2 inches of the top or bottom and leave the cabinet either at or within 2 inches of the top or bottom of the opposite end of the cabinet **or** enter and exit at or within 2 inches of the same end of the cabinet. **Applicants must ensure that the conductors are routed carefully when using this option.**

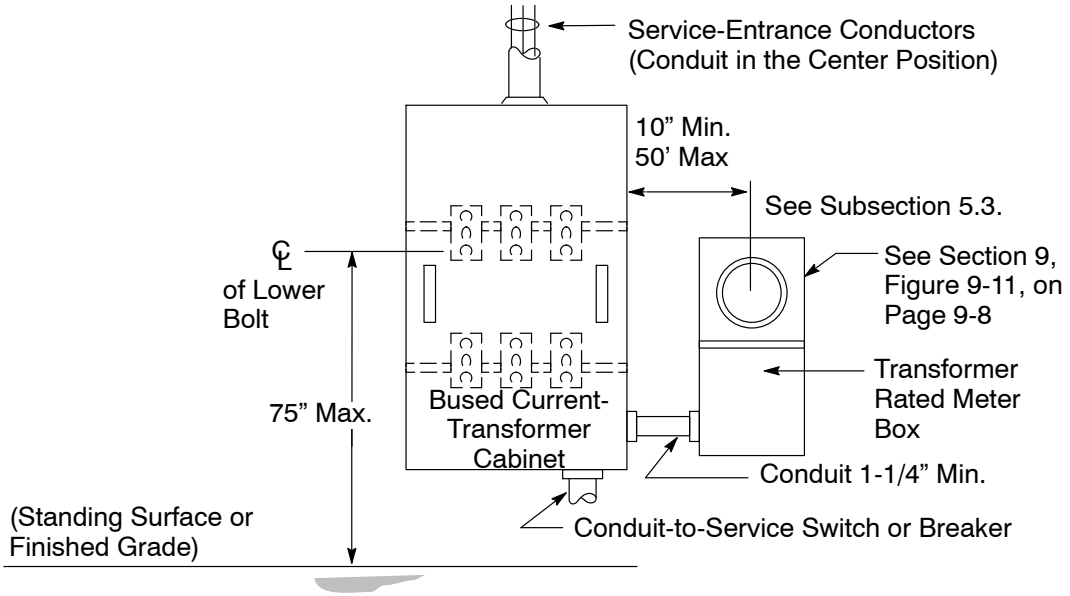

Figure 7-9
Overhead-Fed, Separate-Bused, Current-Transformer Cabinet and Safety-Socket Meter Box (201 Amps–400 Amps, 3∅, and 201 Amps–600 Amps, 1∅)

C. Services, 201 Amps and Above, Current-Transformer Metering in Switchboard Service Sections

1. When installing a single, overhead service using current transformers, applicants must furnish, install, own, and maintain a switchboard service section with provisions for the overhead service termination.
2. Typical switchboard service-section arrangements are illustrated in Figure 7-10, “Overhead, Service-Termination, Standard Switchboard Service Section (0 Volts–600 Volts),” on Page 7-13.

   NOTE: See Section 10 for details.
3. Applicants must furnish and install service-entrance conductors and either cable or bus bars, as described below.
   - When switchboards are served through bus-bar conductors, the conductors must enter through the top or at the side or back in the upper 10-inch section.

- When switchboards are served through cable conductors, the conductors must enter through the top of the switchboard. Figure 7-10, on Page 7-13, illustrates an extension that allows for horizontally incoming conduits from the side or rear of the standard switchboard service section.

4. Applicants must ensure that the service-entrance conductors feed from top to bottom. Load conductors must leave **below** the metering compartment barrier. Applicants must ensure that service entrance conductors are connected to the busing in the service sections with lugs approved for the type of conductors used.

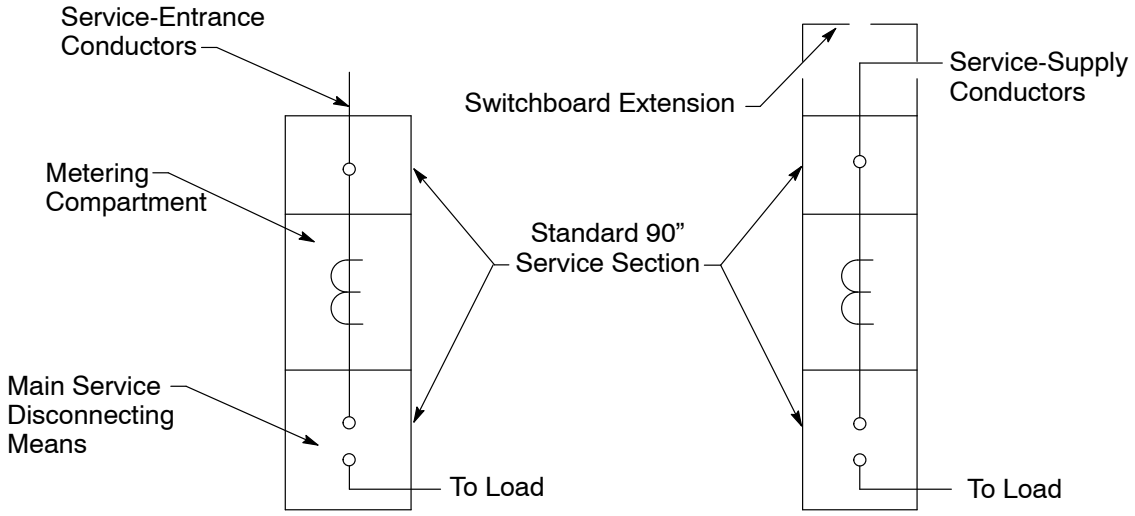

Figure 7-10
Overhead, Service-Termination, Standard Switchboard Service Section
(0 Volts–600 Volts)

7.2.8. Multi-Applicant Meter Installations

Applicants must meet the following requirements when installing multi-applicant meters.

A. Applicants must install grouped meters for multi-applicant buildings where each occupant is metered individually.

B. Each unit of a multi-applicant installation must be considered a single applicant and must meet the metering requirements described in Subsection 7.2.5., "Services, 0 Amps Through 200 Amps, Single Applicant, Overhead and Underground," on Page 7-3.

C. Applicants must ensure that service entrance conductors for multi-applicant installations extend from PG&E's service termination point to the line side of the meter socket jaw of each socket.

D. Applicants must ensure that the minimum centerline spacings between meter sockets are 7-1/2 inches horizontal and 8-1/2 inches vertical.

NOTE: PG&E provides and installs nonconductive, meter-socket, blank-off covers before energizing meter panels with vacant meter sockets. PG&E will **not** energize meter panels and sockets unless blank-off meter covers are installed.

E. For multimeter installations, PG&E determines the ampacity rating of a grouped multimeter installation using one of the following two methods.

1. For installations **without** a main switch or breaker, the service rating will be the rating of the electrical enclosure or service-termination section, pull can, or other service-termination enclosure where PG&E terminates and connects its supply facilities and conductors. Also, see Subsection 1.14.B., on Page 1-12.

2. For installations **with** a main switch or breaker, the rating of the service to be supplied is the rating of the termination section, pull can, service section, or main service switch continuous current rating (typically whichever is greater). Also, see Section 1, "General," Subsection 1.14.A., on Page 1-11.

F. When a sealable gutter protrudes beyond the meter-mounting surface by more than 4 inches, applicants must maintain 10 inches of clearance from the centerline of the meter face. Otherwise, applicants must have a minimum 4-1/4 inches of vertical clearance.

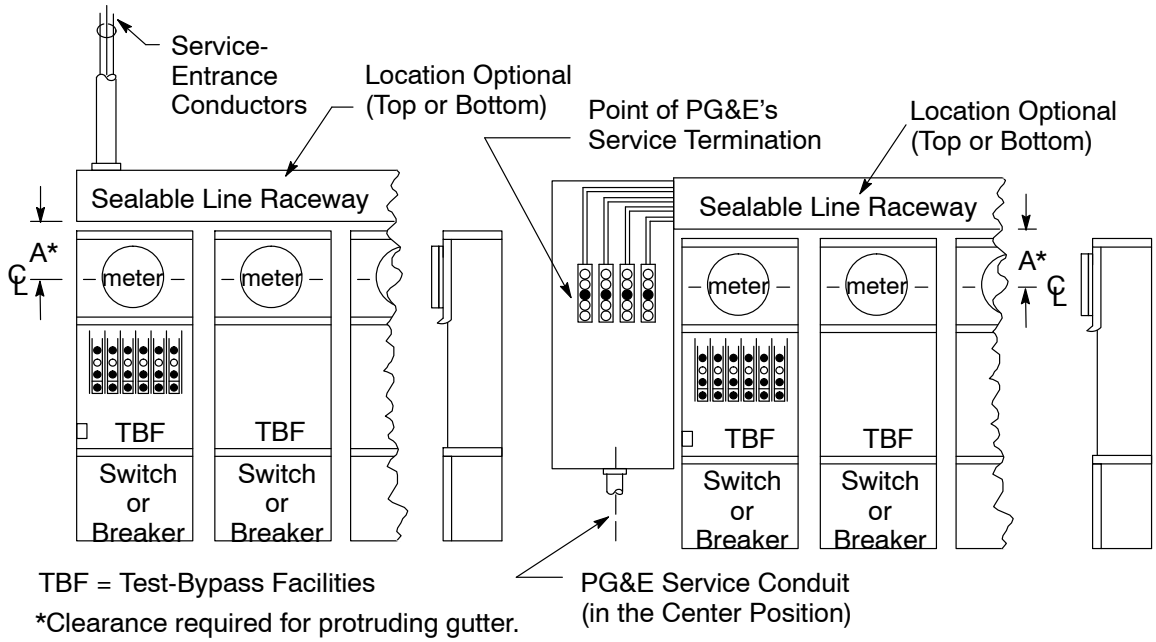

Figure 7-11
Overhead Service, Grouped-Meter Installation *Without* a Main Switch

Figure 7-12
Underground Service, Grouped-Meter Installation *Without* a Main Switch

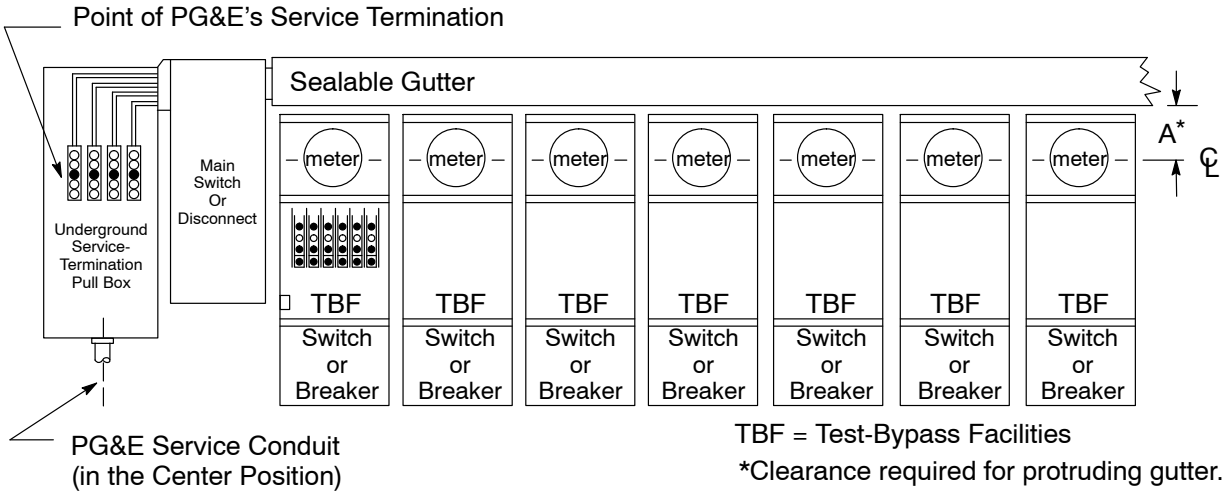

Figure 7-13
Grouped-Meter Installation *With* a Main Switch

This Page Intentionally Left Blank

Section 8
Electric Metering: Direct Access

SECTION 8 ELECTRIC METERING: DIRECT ACCESS

Section 8
Electric Metering: Direct Access

8.1. Scope

Requirements for Section 8, "Electric Metering: Direct Access," have been developed based on California Public Utilities Commission (CPUC) decisions, including *Electric Rule 22*, "Direct Access," and Pacific Gas and Electric Company's (PG&E's) *Direct Access Standards for Metering and Meter Data (DASMMD)* book, filed with the CPUC on March 1, 1999, per its Decision 98-12-080.

This Page Intentionally Left Blank

Section 9
Electric Metering: Components

SECTION 9 ELECTRIC METERING: COMPONENTS

Section 9
Electric Metering: Components

9.1. Scope

This section of the manual provides detailed information on individual electric metering components and equipment that Pacific Gas and Electric Company (PG&E) finds acceptable for use in electric metering construction projects.

The *Electric Utilities Service Equipment Requirements Committee* (*EUSERC*) book, Section 300, contains service and meter-equipment details for PG&E-approved components, as well.

9.2. Test Blocks for Self-Contained Metering, 0 Amps Through 225 Amps

A test block is a specific type of test-bypass **device**. A test block differs from a test-bypass **facility**, which is any mechanism used to bypass meter sockets. Both test blocks and test-bypass facilities are used for self-contained metering exclusively.

Applicants must ensure that test blocks meet the following requirements.

A. The hex nut must measure 5/8-inch across flats with a copper washer attached. The hex nut must de-energize the meter socket when backed off.

B. Stud A, located at each conductor terminal, is used to bypass the applicant's load current. Applicants must ensure that these studs are used as described in the following three bullets.

- Stud A must be located in the clear area between the terminating lug and the circuit-closing nut.
- Stud A may be positioned on the terminal body, on the terminal screw, or on the bus member.
- Stud A may be incorporated as part of the wire stop.

C. Terminals must be aluminum-bodied and suitable for copper and aluminum conductors. The terminal screw may be an Allen type, 3/16-inch across flats for 100-ampere meters, or 5/16-inch across flats for 200-ampere meters.

D. If Stud A is a part of the terminal screw, the terminal screw must be a 5/8-inch hex.

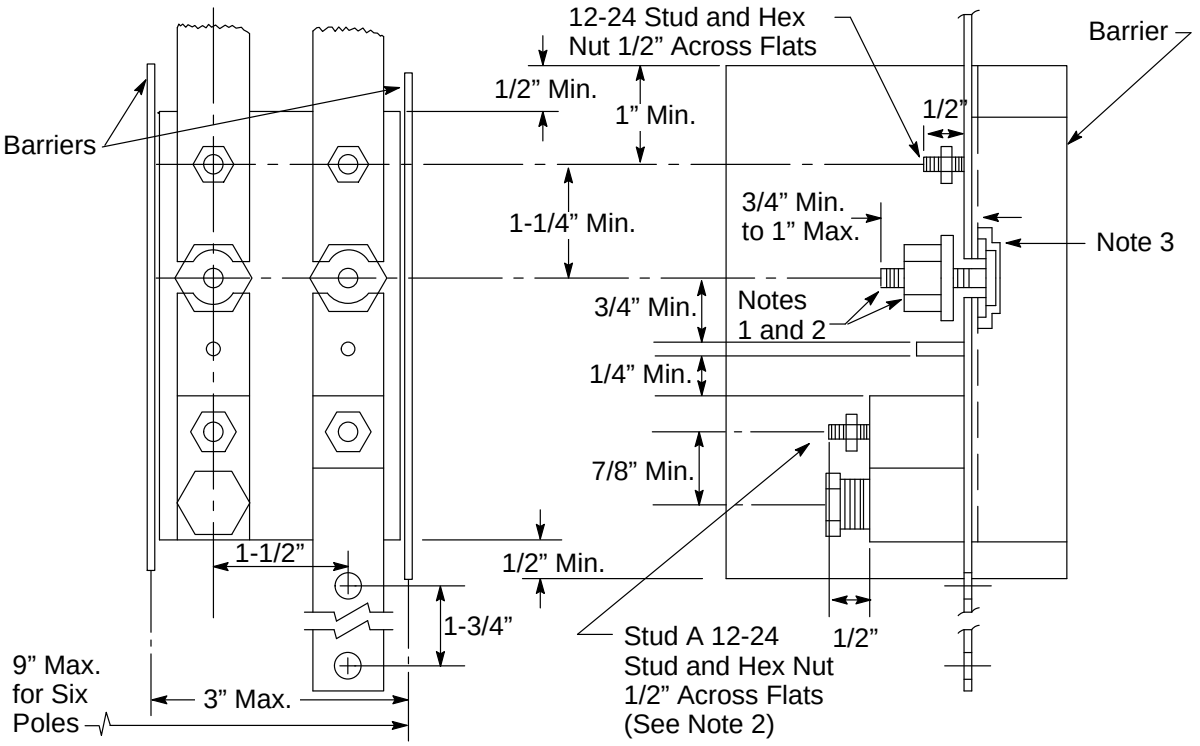

Figure 9-1
Test Blocks for Self-Contained Metering, 0 Amps−225 Amps

Notes in reference to Figure 9-1.

1. A hex nut (i.e., 5/8-inch across flats with a copper washer attached) de-energizes the meter socket when backed off.
2. Stud A, located at each conductor terminal, permits PG&E to bypass the applicant's load current. Locate Stud A in the clear area between the terminating lug and the circuit-closing nut. Stud A may be positioned on the terminal body, on the terminal screw, on the bus member, or incorporated as part of the wire stop.
3. Terminals must be aluminum-bodied and suitable for copper and aluminum conductors. The terminal screw may be an Allen-type (i.e., 3/16-inch across flats for 100-amp meters or 5/16-inch across flats for 200-amp meters). If Stud A is a part of the terminal screw, the terminal screw must be a 5/8-inch hex.
4. **Do not use** an automatic bypass or manual lever bypass. These types of test blocks are not allowed.

9.3. Test Switch Mounting Base Detail

Figure 9-2, below, shows the base dimensions for mounting a removable test switch.

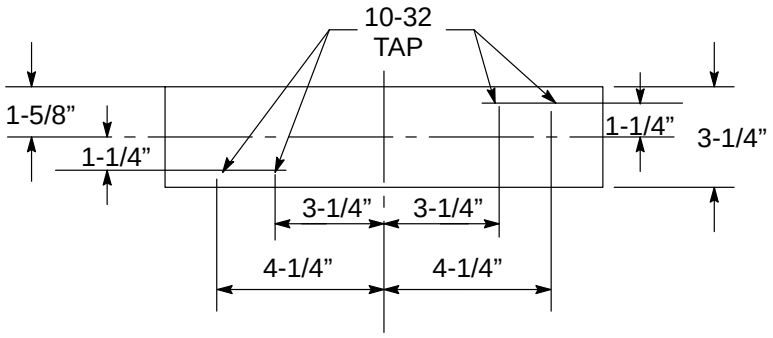

Figure 9-2
Removable Test Switch Mounting-Base Detail

9.4. Separate CT Cabinet, 201 Amps and Above, Single Phase and Three Phase

Applicants must ensure that cabinets meet the following requirements.

A. All covers are sealable.

B. Outdoor current transformer (CT) cabinets are weatherproof.

C. Grounding lugs are provided.

D. CT cabinets are **not** used as splicing chambers.

E. CTs are **not** tapped off to supply other meters or used by applicants for any other purposes.

F. PG&E's underground service-lateral conductors do **not** terminate in CT cabinets.

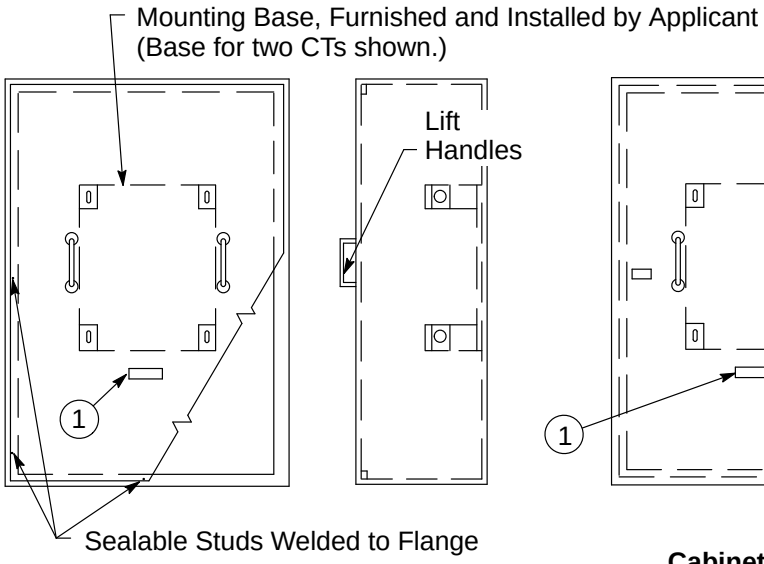

Figure 9-3
Cabinet Showing Stud-Mounted Cover

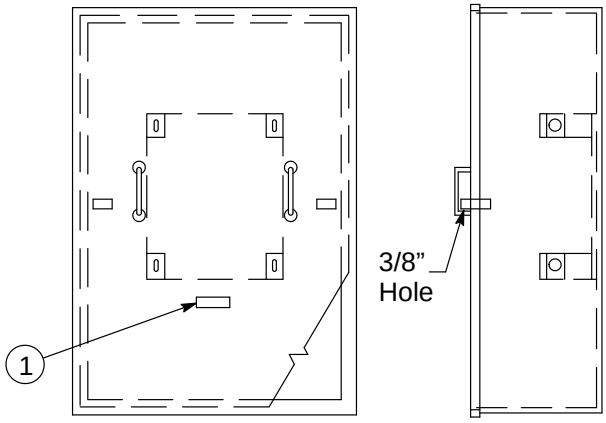

Figure 9-4
Cabinet Showing Flanged Cover
Fastened by Sealable Rivet Latches

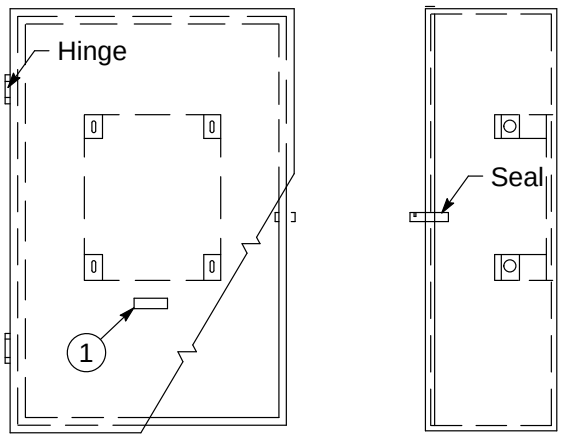

1 Caution Sign

DO NOT BREAK SEAL
NO FUSES INSIDE

Figure 9-5
Cabinet Showing Hinged Front Cover

Table 9-1 CT Cabinet Minimum Dimensions

Type of Service	Cabinet Size (in Inches)	CT Mounting Base	CT Cabinet
3-Wire, 1∅	24w x 48h x 12d	Figure 9-6	Figure 9-8
4-Wire, 3∅	36w x 48h x 12d	Figure 9-7	Figure 9-9

9.5. CT Mounting Base, 201 Amps Through 400 Amps

Applicants must ensure that all of the required lugs are furnished and that conductors are connected to the line and load terminals on the CT mounting base. Also, applicants must ensure that the power leg conductor for a 4-wire delta service is marked clearly. The power leg is identified by using the color orange.

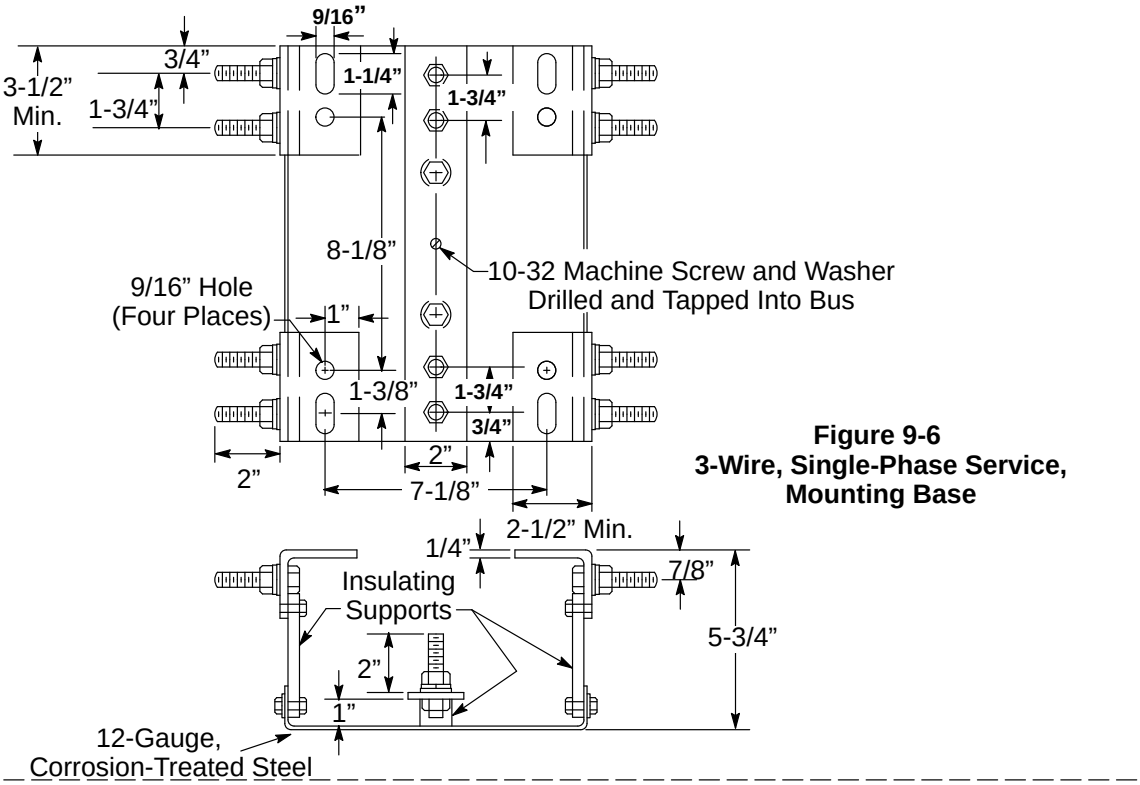

Figure 9-6
3-Wire, Single-Phase Service, Mounting Base

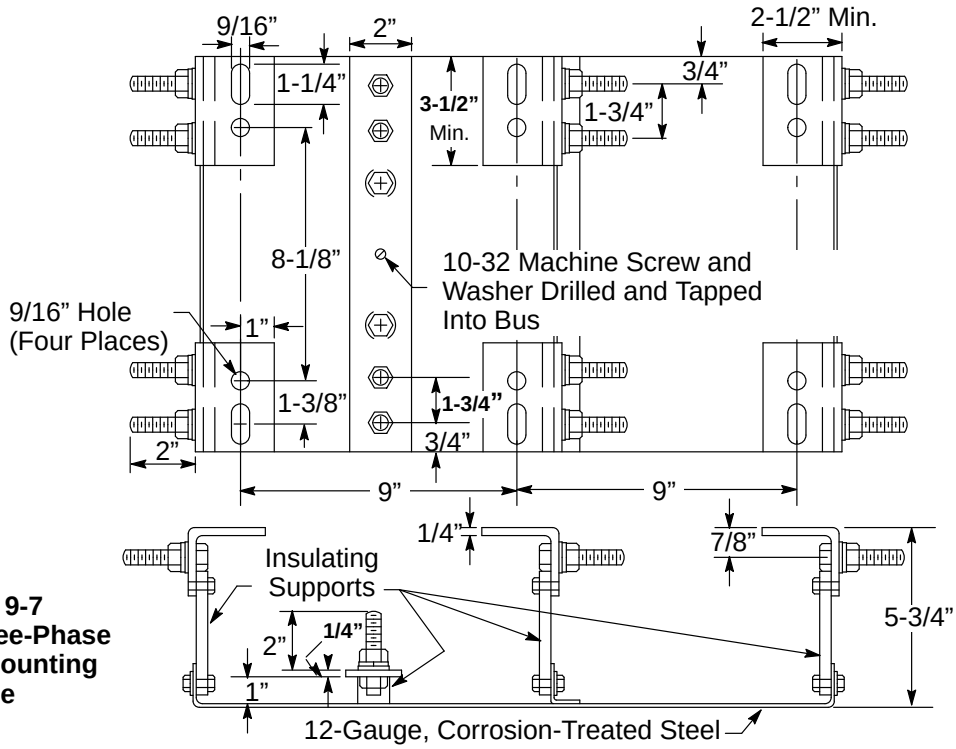

Figure 9-7
4-Wire, Three-Phase Service, Mounting Base

9.6. Alternate CT Mounting Base, 3-Wire, One Phase or Three Phase

Applicants must ensure that mounting bases meet the following requirements.

A. Insulated supports are rated for the serving voltage and have sufficient mechanical strength for the application.

B. Mounting bases accept bar-type CTs only.

C. Two 1/2-inch steel, Grade 5 bolts are provided for each cable-terminating and CT-mounting position. Each bolt must be furnished with a 2-1/4-inch diameter Belleville washer and a nut. Bolts must be secured in place and spaced as shown in Figure 9-6, “3-Wire, Single-Phase Service, Mounting Base,” on Page 9-4. All parts must be plated to prevent corrosion.

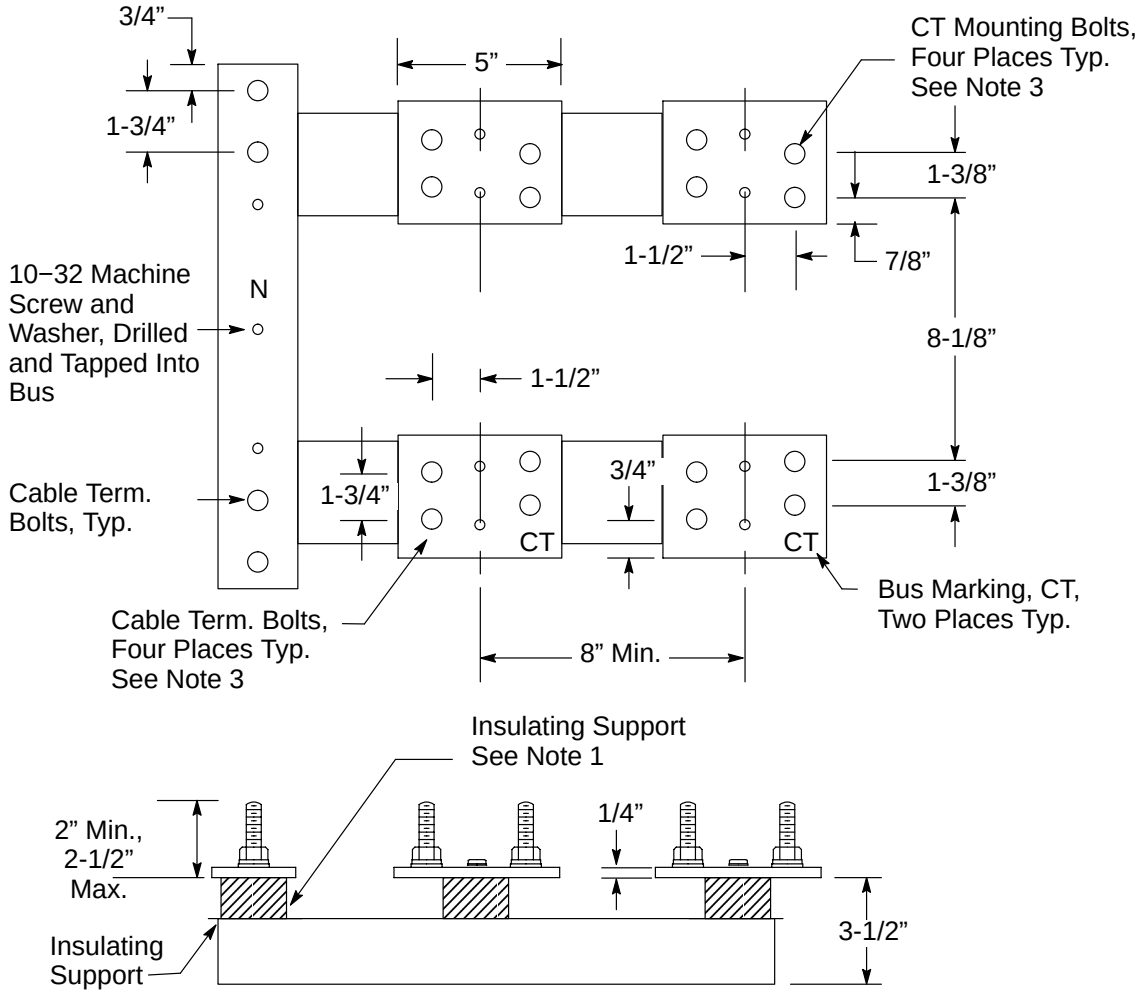

Figure 9-8
CT Mounting Base (Single-Phase or Three-Phase, 3-Wire, 201 Amps−600 Amps, 0 Volts−600 Volts)

Notes in reference to Figure 9-8.

1. Insulated supports must be rated for the serving voltage and have sufficient mechanical strength for the application.
2. The mounting base accepts bar-type CTs only.
3. Two 1/2-inch steel, Grade 5 bolts must be provided for each cable-terminating and CT mounting position. Each bolt must be furnished with a 2-1/4-inch diameter Belleville washer and a nut. Bolts must be secured in place and spaced as shown. All parts must be plated to prevent corrosion.

9.7. Bused CT Cabinet, 3-Wire Service, 201 Amps Through 800 Amps

Applicants must ensure that cabinets meet the following requirements.

A. All covers are sealable.

B. Outdoor CT cabinets are weatherproof.

C. Grounding lugs are provided.

D. Neutral or unmetered wiring, either cable or bus bar, is located on either side of the cabinet.

E. CT cabinets are **not** used as splicing chambers.

F. PG&E's underground service lateral conductors do **not** terminate in CT cabinets.

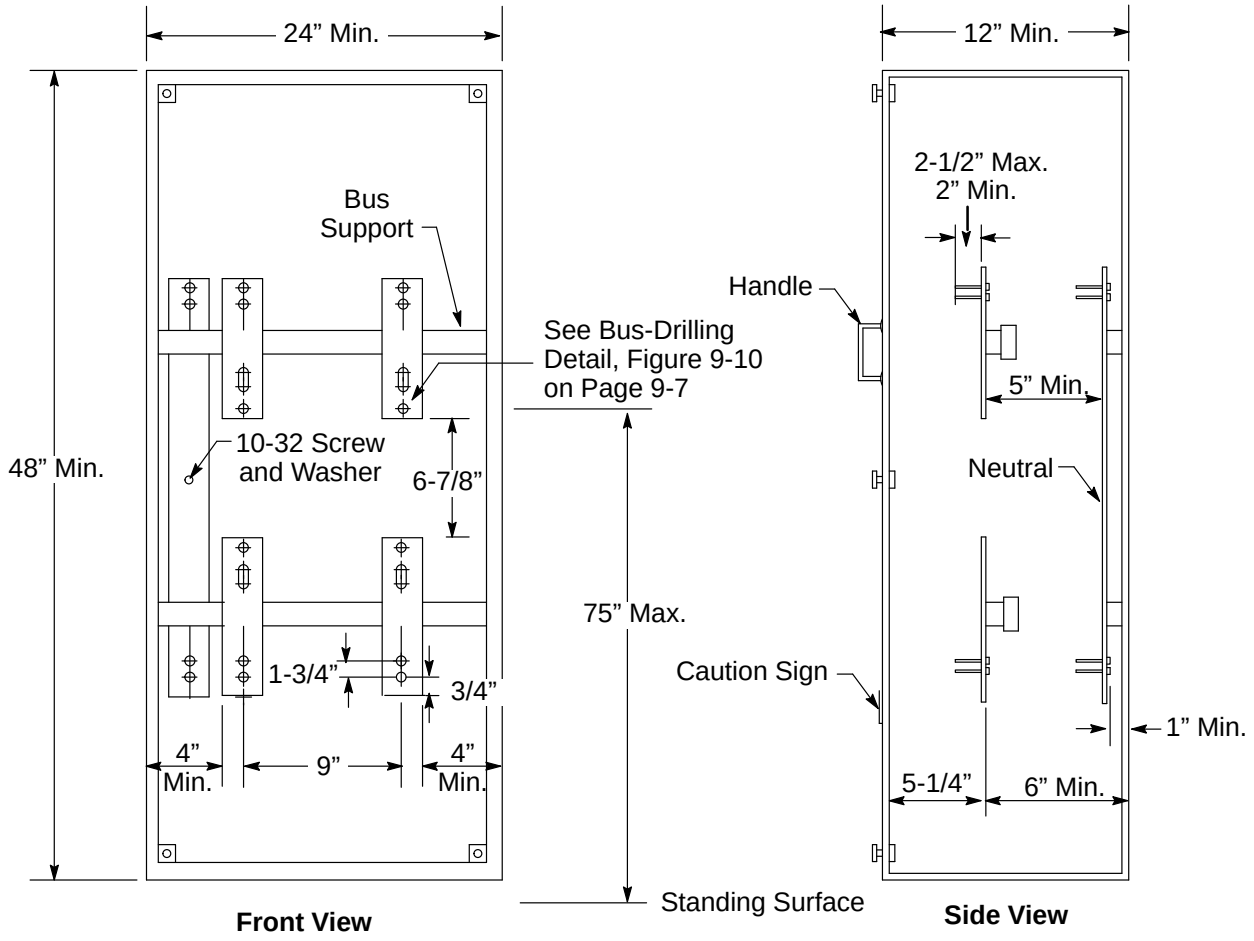

Figure 9-9
Bused CT Cabinet, 3-Wire Service, 201 Amps−800 Amps

9.8. Bused CT Cabinet, 4-Wire Service, 201 Amps−800 Amps

Applicants must ensure that cabinets meet the following requirements.

A. All covers are sealable.

B. Outdoor CT cabinets are weatherproof.

C. Grounding lugs are provided.

D. Neutral or unmetered wiring, either cable or bus bar, is located on either side of the cabinet.

E. CT cabinets are **not** used as splicing chambers.

F. PG&E's underground service lateral conductors do **not** terminate in CT cabinets.

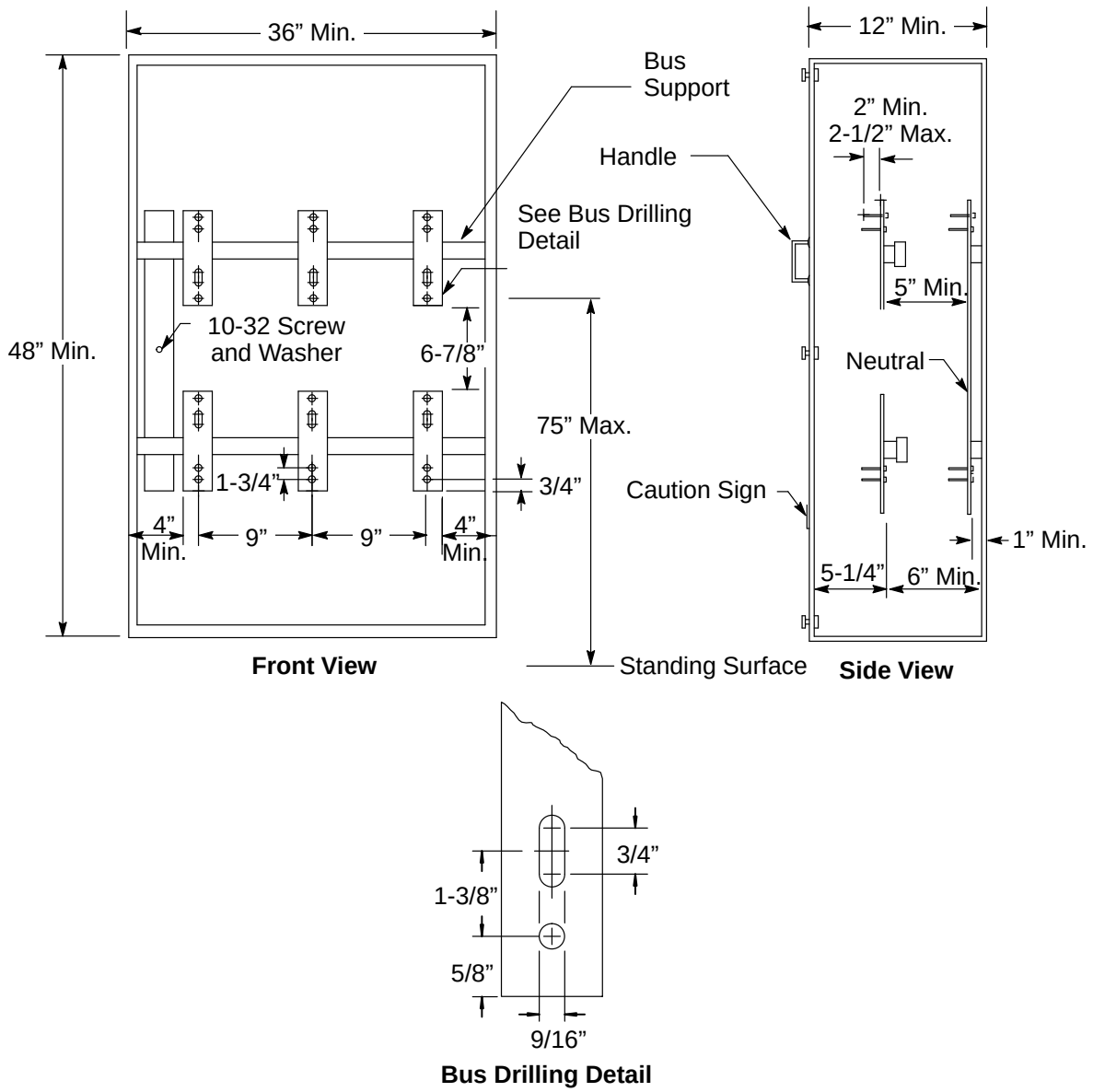

Figure 9-10
Bused CT Cabinet (4-Wire Service, 201 Amps−800 Amps)

9.9. Meter Box for Transformer-Rated Metering

Applicants must ensure that meter socket jaw requirements and connections are made according to the rules in Section 5, “Electric Metering: General,” Subsection 5.6., on Page 5-16.

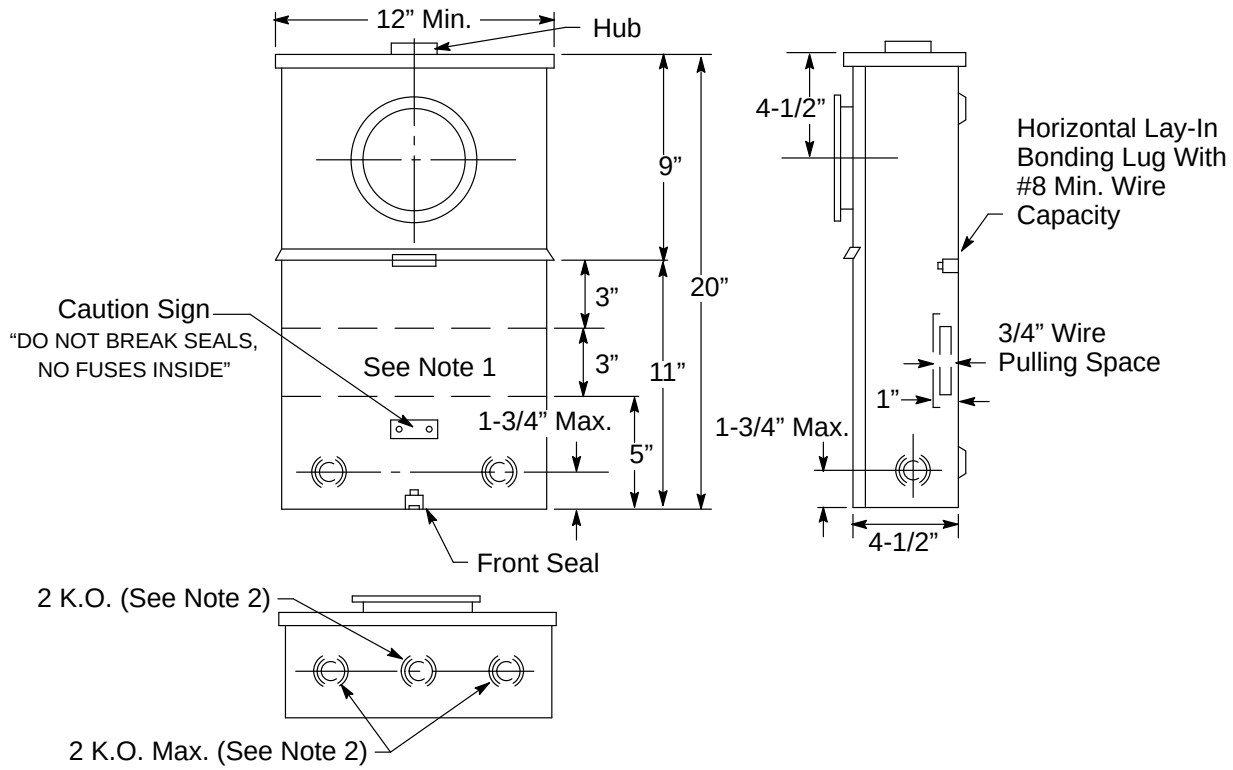

Figure 9-11
Meter Box for Transformer-Rated Metering
(Single-Phase or Three-Phase Installations)

Notes in reference to Figure 9-11.

1. Location of mounting bracket for test switch or reactive transformer.
2. K.O.−knock out

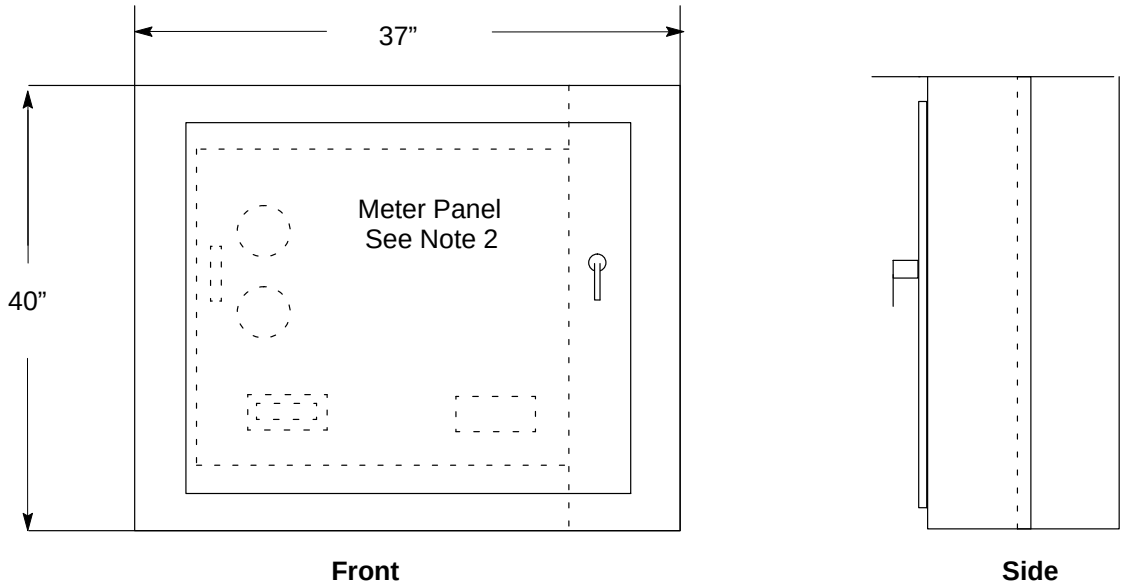

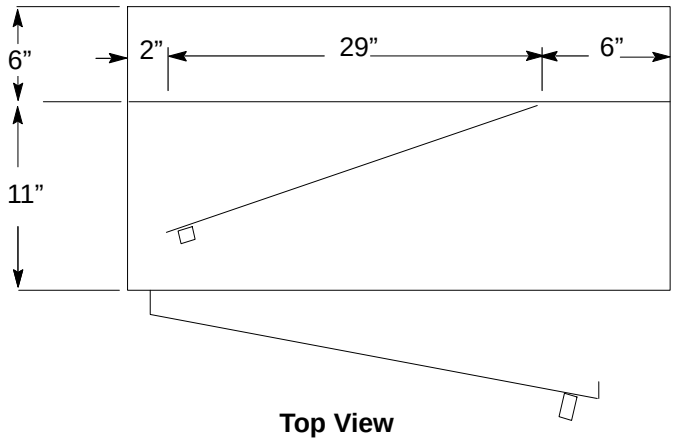

Table 9-2 Hinged Meter Panel Requirements

Service Voltage	Switch Rating	Hinged Panel Required
277/480V 3∅, 4-Wire	401 Amps and Above,	Yes
120/240V 3∅, 4-Wire	801 Amps and Above	Yes
120/208V 3∅, 4-Wire	1,001 Amps and Above	Yes

Figure 9-12
Remote Metering Cabinet (Three-Phase Installations)

Notes in reference to Figure 9-12.

1. The enclosure must be:
   a. Equipped with a device to secure the door in the open position at 90° or more.
   b. Secured in the closed position with a handle-operated latching mechanism, and lockable with a padlock having a 5/16” lockshaft.
2. For meter panel requirements, see Figure 10-27, “Standard Switchboard Service Section, 30-Inch Panel for Socket Meters and Recorder,” on Page 10-37.
3. Written information must be provided and marked inside of the meter panel. This information must include:
   a. Potential Transformer/Current Transformer (PT/CT) designation (Type)
   b. Rating Factor (RF)
   c. Burden
4. Remote metering must be approved by the the local meter shop before installation.
5. See Table 9-2, “Hinged Meter Panel Requirements,” above.

9.10. Underground Service Cable-Termination Section or Pull Box

Applicants must ensure that underground service-termination sections or pull boxes meet the following requirements.

A. Pull box covers must be removable, sealable, provided with two lifting handles, and limited to a maximum size of 9 square feet.

B. The panel can be sealed using two drilled stud-nut and wing-nut assemblies on opposite sides of the panel.

C. The minimum dimensions specified in Table 9-3, “Minimum Wall-Mounted Pull-Section Dimensions: Residential and Nonresidential, Single-Phase or Three-Phase,” on Page 9-11, are used when the service conduit enters the bottom of the termination compartment or pull box and all load conductors exit above the terminals. When the service conduit enters from the side or back of the pull box, use the X dimensions from the closest portion of the conduit to the nearest termination bolt.

D. A PG&E project coordinator is contacted when developing nonresidential, 401-amps-and-above services. Applicants must ensure that they meet PG&E’s requirements for underground service-termination pull boxes, which include the following:

   1. Installing multiple sets of utility service cables.
   2. Provide stacking lug provisions to terminate cables in any three-phase installation that is 1,200 amps or greater.
   3. Providing additional space (i.e., depth, width, and termination height), when required, in any section of switchboard, panel board, or other enclosure intended as a termination point for PG&E’s service cables. This additional space will provide the mandatory clearances between phases and grounded surfaces, as well as accommodate the installed service cables.

   See Numbered Document 063928, “Methods and Requirements for Installing Commercial Underground Electric Services 0−600 Volts to Customer-Owned Facilities,” for the appropriate conduit and cable requirements to use when designing nonresidential service installations. This document is included in Appendix C, “Electric and Gas Engineering Documents.”

E. Applicants must not use wall-mounted cable-termination and pull enclosures for three-phase, nonresidential installations rated 401 amps through 2,500 amps. See Table 9-4, “Minimum Pad-Mounted (Floor-Standing) Switchboard Pull-Section Dimensions: Residential and Nonresidential, Single-Phase and Three-Phase,” on Page 9-11, and Table 10-1, “Minimum Bottom-Fed Pull Section Dimensions,” on Page 10-24, for bottom-entry installation requirements. See Table 10-2, “Pull Section Dimensions (Minimums) Below Ground Level,” on Page 10-27, for side-entry or back-entry requirements.

F. See additional requirements for pad-mounted switchboards in Section 10.3.14., “Underground, Cable-Terminating Facilities in Pull Boxes or Pull Sections,” on Page 10-29. The information and figures describe additional requirements for applicants who install these facilities.

Table 9-3 Minimum Wall-Mounted Pull-Section Dimensions: Residential and Nonresidential, Single-Phase [1] or Three-Phase [1]

Service Rating (Amps)	Minimum Access Opening "W"		X		Y	
	3-Wire	4-Wire	Bottom Entry	Side/Rear Entry	Bottom Entry	Rear Entry
	All Measurements in Inches					
0−225 [2]	10-1/2	14	11	36	6	15
226−400	10-1/2	14	22	42	6	24
401−600 [3]	16-1/2	—	26	48	11	24
Over 600	See Table 9-4, below, for nonresidential, single-phase services over 600 amperes and all three-phase services over 400 amperes.					
601−800 [3, 4]	16-1/2	—	26	48	11	24

1 See "Notes" at the bottom of this page in reference to Table 9-3 and Table 9-4.
2 See Table 6-1 for minimum dimensions of residential (combination) meter panels.
3 Single phase only.
4 Residential only.

Table 9-4 Minimum Pad-Mounted (Floor-Standing) Switchboard Pull-Section Dimensions: Residential and Nonresidential, Single-Phase and Three-Phase

Service Rating (Amps)	Minimum Access Opening "W"		Termination Height "X"
	3-Wire	4-Wire	
	All Measurements in Inches		
321−400	24	24	42 Min.−72 Max. (see Note 4 below)
401−800	24	24	
801−1,200	24	30	
1,201−2,000	30	35	
2,001−2,500	—	42	60 Min.−72 Max.

Notes in reference to Table 9-3 and Table 9-4.

1. If termination bus-landing stubs are installed perpendicular to the back of the board, a wider enclosure dimension will be required to accommodate the installation of PG&E's cables.
2. Maintain a clear working space. When return flanges are necessary, ensure they do not intrude into service-conductor space.
3. Dimension W is the minimum width of the pull section access opening.
4. The minimum termination height is 40-1/4 inches for Bottom-Fed Service Sections only as shown in Figure 7-7 on Page 7-8 and Figure 10-14 on Page 10-24.

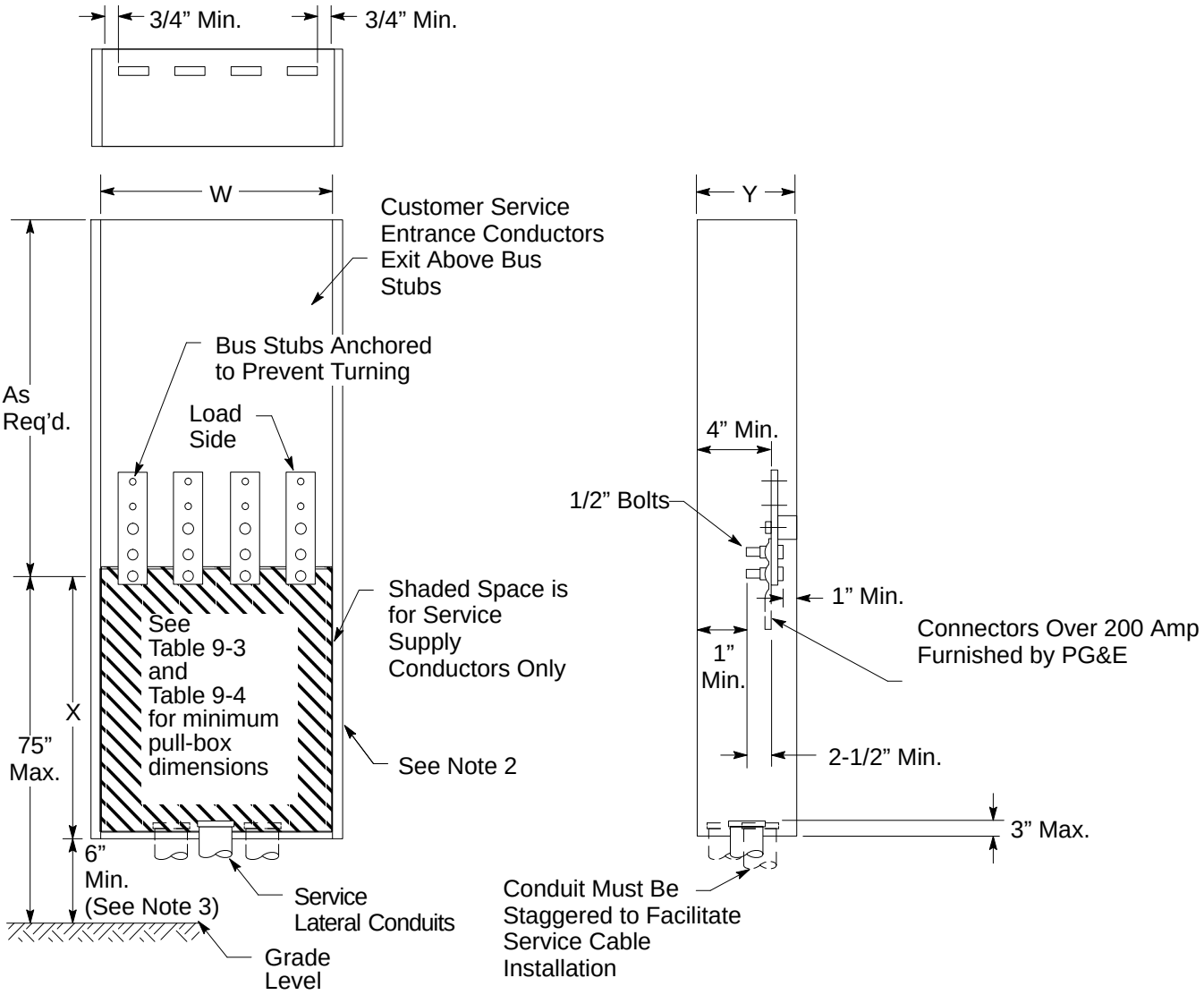

Figure 9-13
Typical Underground Service Termination Section and Pull Box, Wall-Mounted or Pad-Mounted (Floor-Standing)

Notes in reference to Figure 9-13.

1. Ensure that pull-box covers are removable, sealable, provided with two lifting handles, and limited to a maximum size of 9 square feet. Sealing provisions must consist of two drilled stud-and-wing nut assemblies on opposite sides of the panel. Ensure that all security screws are captive.
2. Maintain a clear working space. When return flanges are necessary, ensure that they do not intrude into service conductor space (designated by shading).
3. The 6-inch minimum height requirement from grade to panel does not apply for a floor-standing switchboard.
4. A main service switch rated at 2,501 amps and above requires bus-duct configuration.

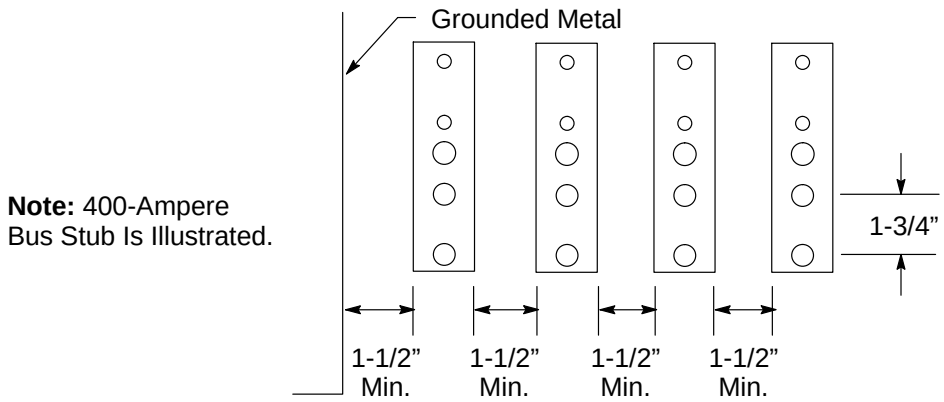

Figure 9-14
Detail of Clearance Requirements for Adjacent Termination Bus Stubs

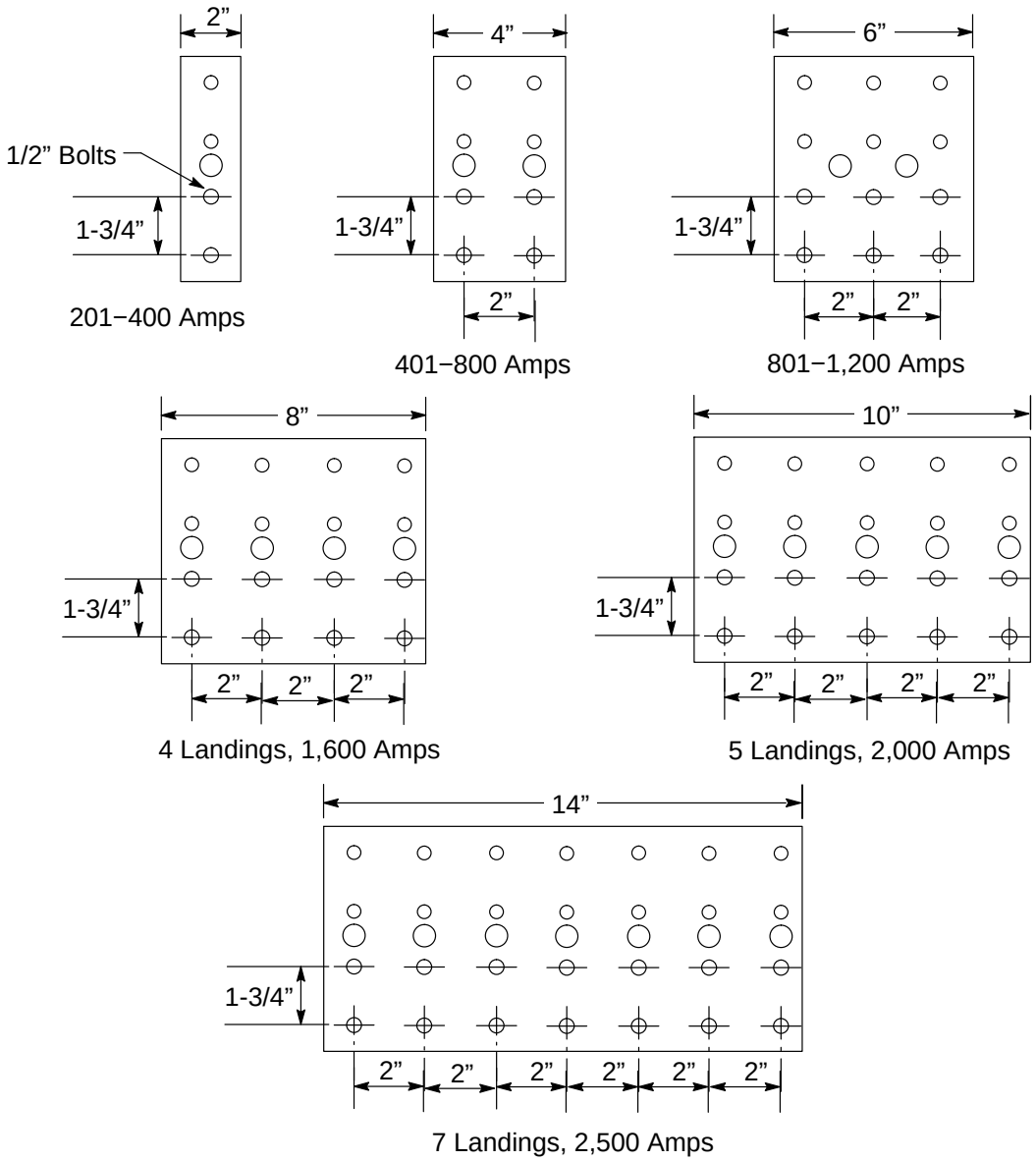

Figure 9-15
Detail of Aluminum, Termination Bus Stubs

9.11. Approved Service-Terminal Conductor Connectors

Applicants must observe the following requirements when they plan to install approved, service-terminal conductor connectors.

A. Applicants must furnish and install PG&E-approved, range-taking connectors, suitable for aluminum conductors, for enclosures rated at 0 through 225 amps.

B. PG&E must furnish and install approved, cable-to-flat-bar connectors on the termination bus stub, as specified in Table 9-5, "Approved, Compression-Type Service-Terminal Connectors," on Page 9-15, for enclosures rated above 225 amps. For a Class 320-amp panel, cable-to-flat-bar connectors on the termination bus stub are preferred; however, 320-amp-rated meter panels with hex lug terminations are acceptable also. See Numbered Document 058817, "Terminating Underground Electric Services 0-600 Volts in Customer-Owned Facilities," Figure 2 on Page 4.

C. Applicants **may** use one-bolt, bus attachment connectors for 0- through 225-amp services **if** the connectors are anchored to prevent the connector assembly from twisting.

Applicants must **not** use pin termination connectors to install cables larger than those intended for the range-taking connectors in their service panel or service enclosure.

NOTE: Do **not** peel stranded cables to fit conductors into termination connectors.

See PG&E Numbered Document 015251, "Connectors for Insulated Cables Underground Distribution Systems," Table 28, "Specifications for Terminal Connectors−Aluminum Cable-to-Flat-Bar," Page 26 of 44, for more information. This document is included in Appendix C.

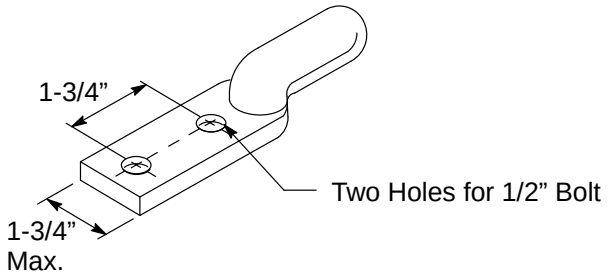

Figure 9-16
Service-Terminal Conductor Connector

Table 9-5 Approved, Compression-Type, Service-Terminal Connectors

Conductor Size: AWG or kcmil	Manufacturer and Catalog Number						Tool Index Number
	Mac	Homac	Burndy	Electrical Specialty	3M Company	Code	
4/0	NLRB4/0-8N	AL-4/0-NTN	YAK28A-2G2	—	—	303759	4/0 AS
	MLB4/0-8N	—	YA28-A5	AHL-4/0-BNTP	40145	—	4/0 A
350	NLRB350-8N	AL-350-NTN	YAK31A-2G2	—	—	303758	350 A
	MLB350-8N	—	YA31-A3	AHL-350-BNTP	40156	—	350 A
700/750	NLRB750-8N	AL-750-NTN	YAK39A-2G2	—	—	303833	700/750 A
	MLB750-8N	—	YA39-AM2	AHL-750-BNTP	40172	—	700/750 A
1,000	NLRB1,000-8N	AL-1,000-SSN	YAK44A-2NG7	—	—	303834	1,000 A
	MLB1,000-8N	—	YCAK44A-2G2	AHL-1,000-BNTP	40178	—	1,000 A

9.12. Underground-Service Auxiliary Pull Cabinet

Applicants must observe the following requirements when they plan to install an underground-service auxiliary pull cabinet.

A. Applicants may use auxiliary pull cabinets when there is more than one 90° turn in a service lateral run that will terminate in an underground service-termination pull box. Applicants must furnish and install auxiliary cabinets.

B. Applicants must ensure that underground-service auxiliary pull cabinets:

1. Have suitable grounding lugs and are provided with sealable covers.
2. Are constructed of sturdy metal.
3. Are weatherproof.
4. Have an 11-inch minimum depth. When the available space is not large enough to provide the specified minimum dimensions, ask your local project coordinator to consult with the PG&E electric meter department.

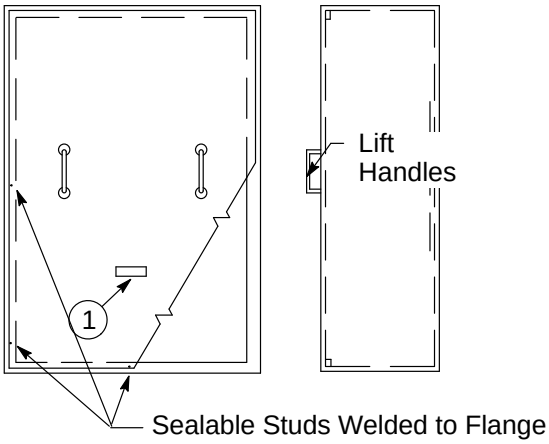

Figure 9-17
Cabinet Showing Stud-Mounted Cover

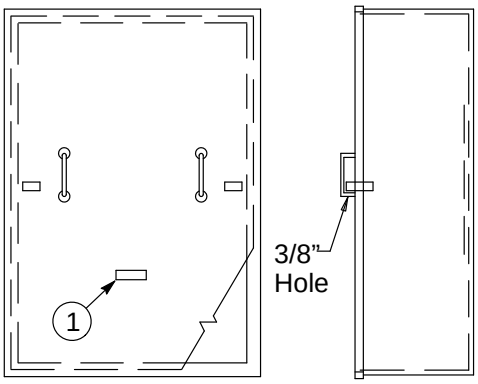

Figure 9-18
Cabinet Showing Flanged Cover
Fastened by Sealable Rivet Latches

1 Caution Sign

DO NOT BREAK SEAL
NO FUSES INSIDE

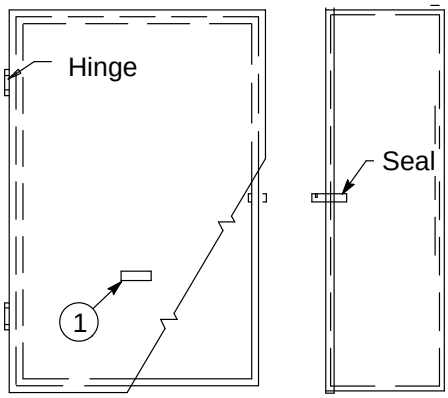

Figure 9-19
Cabinet Showing Hinged, Flanged Cover

Table 9-6 Minimum Connection Cabinet Sizes [1]

Switch Service Capacity (in Amps)	3-Wire Service	4-Wire Service
	All Measurements in Inches	
225	24 x 24	24 x 24
400	24 x 30	24 x 30
600	24 x 30	30 x 36
800	30 x 36	36 x 36

[1] When service is over 800 amps, consult your local PG&E project coordinator.

9.13. Nonresidential Service Pedestals 0 - 200 Amps (EUSERC 308)

Applicants must ensure that nonresidential service pedestals meet the following requirements.

A. The meter socket is mounted on a support, attached to the meter panel, and provided with a sealing ring. Enclose the meter socket with an enclosing cover that is:

   1. Hinged to allow the top and front to be rotated back as one unit to expose the metering compartment. The “A” dimension applies when the meter compartment side panels are fixed in place and obstruct the meter socket side clearance. Ensure that the lifting force required to open the cover does not exceed 25 pounds.
   2. Equipped with a lifting handle.
   3. Sealable and lockable with a padlock having a 5/16-inch lock shaft.
   4. Provided with a demand reset cover with a viewing window. Ensure that the reset cover is sealable and lockable with a padlock having a 5/16-inch lock shaft.

B. The test-bypass compartment cover:

   1. Does **not** exceed a maximum weight of 25 pounds.
   2. Has a fixed top and sides that allow access to the metering compartment through a hinged door. The hinged door must be equipped with a device to hold the door open at 90° or more.
   3. Is sealable and fitted with a lifting handle.
   4. Has two lifting handles if the cover is more than 16 inches wide.

C. Test-bypass blocks with rigid barriers are furnished, installed, and wired or bused to the meter socket by the manufacturer. Connection sequences must be line-loaded from left to right and clearly identified by block-letter labeling at least 3/4-inch high.

   Applicants must ensure that test-bypass facilities are installed with the following clearances.

   1. Facilities require 3 inches of vertical clearance from the upper test connector stud to the upper compartment access opening.
   2. Facilities require 3 inches from the center of the cable terminal screw to the lower compartment access opening.
   3. Facilities require 1-1/2 inches of side clearance from the rigid insulating barriers to the compartment sides and 1 inch to the compartment access openings.

D. Utility compartment covers (i.e., meter covers, demand reset covers, and pull sections) are sealable and lockable using a padlock with a 5/16-inch lock shaft.

E. Internal equipment attached to the outer walls of the enclosure is secured in place with devices that cannot be loosened from the outside. Do **not** use screws or bolts requiring special tools to install or remove them.

F. The terminating pull-section of the pedestals:

1. Comply with the minimum dimensions illustrated in Table 9-7 on Page 9-19.
2. Accept a minimum 3-inch conduit.
3. Have covers equipped with lifting handles.
4. Are equipped with aluminum-bodied mechanical lugs, ranging from #6 AWG through 250 kcmil, for terminating the service conductors.
5. Have insulated cables or busses installed between the termination lugs and the test-bypass facilities.
6. Have protective metallic barriers, 16-gauge minimum, provided between the pull sections and their (the applicants') distribution sections.
7. Have a 1/4-inch minimum clearance between the applicants' section walls and the barriers to prevent screws and bolts from protruding into the pull sections.

For information on structural-mounting requirements and pedestal support, consult your local PG&E project coordinator.

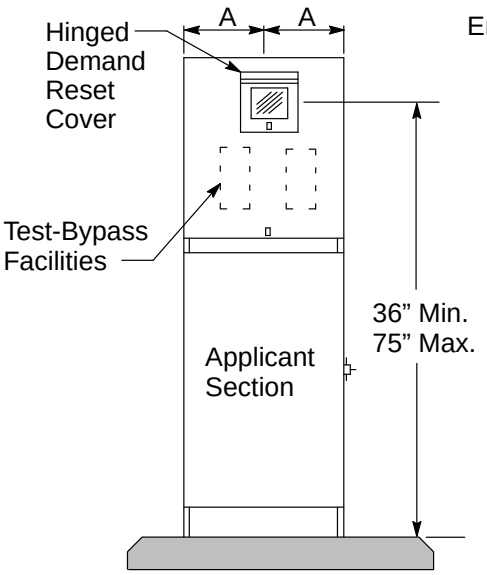

Figure 9-20
Front View

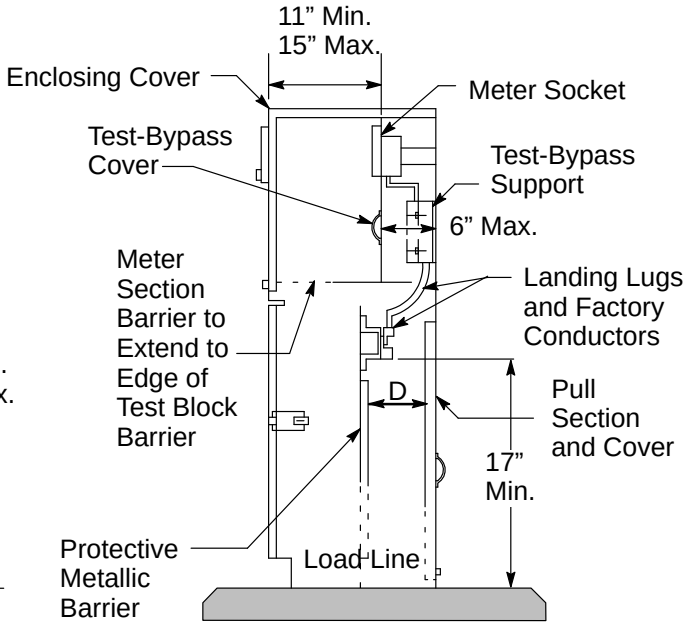

Figure 9-21
Side View

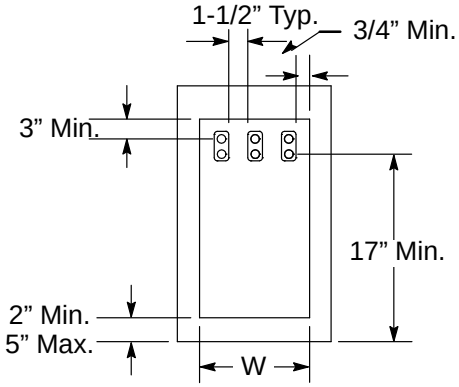

Figure 9-22
Wireway Pull Section

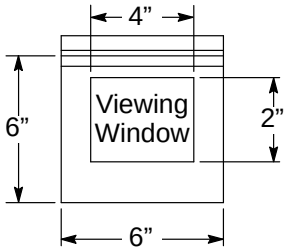

Figure 9-23
Hinged Demand Reset Cover With Polycarbonate Viewing Window

Table 9-7 Minimum Dimensions (Inches)

Service	W	A	D
Single Phase	10-1/2	10	5
Three Phase	12-1/2		

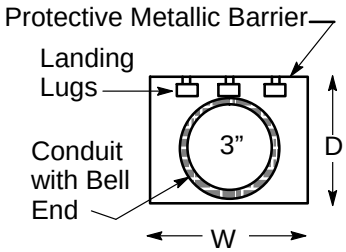

Figure 9-24
Utility Pull Section - Top View

NOTE: These figures represent generic design configurations. To have other designs reviewed and accepted, ask your local project coordinator to consult with the PG&E electric metering department.

This Page Intentionally Left Blank

Section 10
Electric Switchboards: 0 through 600 Volts

SECTION 10 ELECTRIC SWITCHBOARDS: 0 THROUGH 600 VOLTS

Section 10
Electric Switchboards: 0 Volts Through 600 Volts

10.1. Scope

This section of the manual provides specific dimensions and details for service and meter equipment that is assembled by the manufacturer in freestanding, self-supporting switchboards.

10.2. General Requirements

Applicants must meet the following requirements when they plan to install electric switchboards.

A. Ensure that switchboard service and meter equipment is built to the requirements of this section.

B. Ensure that metering switchboard and panelboard drawings, with current ratings of **320 amperes (amps) or above**, are submitted in triplicate to Pacific Gas and Electric Company (PG&E) for review and approval. Drawings must contain specific Electric Utility Service Requirements Committee (EUSERC) or *Electric and Gas Service Requirements* (*Greenbook*) drawing and sheet numbers for reference purposes. Refer to Section 5, "Electric Metering: General," Subsection 5.2.2., "Drawing Submittal Requirements for Metering and Service Termination Equipment," on Page 5-1, for detailed requirements.

C. Ensure that drawings submitted for PG&E's review and approval include the following information.

- The contractor's name and address
- The applicant's name
- The job location

D. Before authorizing the manufacture of a switchboard, an applicant must consult his or her local PG&E project coordinator for specific general utility requirements.

NOTE: See Table FM-1, "Service Planning Office Contact Information," at the front of this manual starting on Page iv, for specific contact numbers listed by area.

E. General utility requirements include the following:

- Horizontal bus-bar requirements
- Service voltage, phase, and wires
- Meter-panel requirements to determine the applicable rate schedule
- Service-termination location
- Switchboard and/or meter location(s)
- Size and number of service conductors

F. PG&E provides and installs meters, metering transformers, test switches, and all secondary wiring from the metering transformers to the meter.

G. Applicants must ensure that separation exists between the meters and metering transformers for the following reasons.

- To ensure meter accessibility.
- To prevent metering inaccuracies.
- To prevent unacceptable environmental conditions.

H. Applicants must ensure that rigid steel conduit is installed between the meter and the metering transformers. The rigid steel conduit must be 1-1/4 inches minimum diameter and must be limited to three 90° bends **unless** the applicant provides sealable, accessible, exposed conduits.

I. Service-entrance conductors must enter the metering transformer compartment from one end and leave from the opposite end. The direction of the feed may be either from the top or from the bottom of the compartment.

Load conductors must **not** reenter or pass through a current transformer (CT) compartment.

J. When transformer-rated meters are installed for multiple applicants, there must be a separate service section for each installed meter and its associated service switch.

K. When applicants are installing totalized metering, they are required to install, own, and maintain nominal 1-1/4-inch metal conduit between the switchboard metering facilities.

L. Applicants should group self-contained meters and switches only when the following conditions are met.

1. Unmetered service entrance conductors and metered load conductors are **not** run in the same conduit raceway or wiring gutter.
2. Each meter position and each service switch or breaker is marked clearly and permanently and is identified by the building owner, or a representative of the building owner, to indicate the occupancy being served.

M. See Subsection 10.8., “Adding New Metering Equipment to Existing Switchboards,” on Page 10-39, before connecting a new meter panel or meter section to an existing switchboard.

10.3. Switchboard Service Section

A switchboard service section is the section of an applicant’s switchboard provided specifically for terminating the service conductors and for housing the metering transformers (if required), revenue meters, test facilities, and service switch or breaker.

10.3.1. Standard Switchboard Service Section

Applicants must ensure that:

A. For all switchboard service sections with current ratings of 320 amps or above, the manufacturer submits drawings, in triplicate, to PG&E for approval. See Figure 10-12, "Pull Section," on Page 10-24, for more information.

B. Switchboard drawings for **all** co-generation and self-generation installations are submitted to a local PG&E project coordinator for review and approval by the PG&E electric metering department **before** the switchboard is constructed or built. Ask your local project coordinator to submit them.

10.3.2. Specifically Engineered Switchboard Service Sections

A switchboard design that does **not** conform to the EUSERC standards is considered specially engineered. Typical examples are:

- Switchboards over 3,000 amps.
- Switchboards with service-breaker ratings too large for the standard switchboard service section.
- Multimeter service sections.

The general arrangement of the specially engineered switchboard service sections must follow, as nearly as possible, the requirements for standard switchboard service sections, as described in Subsection 10.3.1., "Standard Switchboard Service Section" (above), and the requirements described in Subsection 10.3.3., "Requirements for All Switchboard Service Sections" (below).

10.3.3. Requirements for All Switchboard Service Sections

This subsection describes the general requirements for all switchboard service sections and applies to all applicants.

A. The general arrangement and spacing of CTs and the methods of mounting CTs must conform as closely as possible to the illustrations in Figure 10-1 through Figure 10-6 on Page 10-6 through Page 10-15.

B. Mount the socket meters that are used with metering transformers on hinged panels. Mount the self-contained meters on nonhinged panels.

C. When a hinged meter panel is located behind an enclosure door, leave a clear space of at least 11 inches between the meter panel and the door. That is the minimum space required to mount the meter.

D. The meter panels must open at least 90° after the meters and test facilities are in place. If needed, applicants must increase the width of the section to meet these requirements.

E. Applicants must provide a clear space in the back of a meter panel for the secondary wiring and associated equipment.

F. For **hinged meter panel doors**, applicants must provide at least the minimum dimensions between the facility's meter panel and the nearest bus, as shown in Figure 10-1 through Figure 10-6 on Page 10-6 through Page 10-15.

G. For **nonhinged meter panel doors**, applicants must provide a clear space of at least 4 inches to any barrier or obstruction.

H. Applicants must ensure that the minimum clearance be maintained between meters as shown in Figure 10-11, "Standard Section for Self-Contained Meter Sockets, 0 Amps–225 Amps, Installed in Switchboards: Nonresidential," on Page 10-22, and Figure 10-12, "Pull Section," on Page 10-24.

I. An applicant must maintain a minimum clear space of 4 inches directly below the bottom slot of the meter test switch. This space permits test leads to be connected safely.

J. Applicants must **not** mount more than two self-contained meters on any removable meter panel.

K. Applicants must ensure that panels providing access to metering transformers or a service-terminating pull section are no larger than 9 square feet in area. Removable panels must have two lifting handles.

L. Applicants must ensure that the front edge of the CT bus bars are located in the same switchboard section, and in the same vertical plane.

M. Applicants must use either one-bolt or four-bolt connections for switchboards that are rated 1,001 amps through 3,000 amps and have 4-inch buses installed. For switchboards with 5-inch buses, use either two-bolt or six-bolt connections.

N. Applicants must ensure that buses are securely supported in the metering transformer compartment to withstand the mechanical stresses of a short circuit and to resist movement. The bus supports must **not** interfere when CTs either are installed or are removed. Do **not** use CTs to support the buses.

O. Applicants should ensure that the buses and CT mountings are designed so that each of the CTs can be removed from its mounting position directly through the access panel without disturbing any other CT. When using multi-leaf buses, orient the buses so that they appear "edgewise" when viewed from the access panel.

P. When using an aluminum bus, applicants must ensure that the aluminum bus bar is **plated** to prevent corrosion.

Q. Applicants must ensure that all electric meter panels and all equipment doors or panels that are intended to provide access to potential transformers (PTs) and CTs are permanently marked or labeled to indicate the service voltage being supplied.

R. **In switchboards rated over 800 amps, applicants must ensure that the bus bars extend from the termination section and service landing lugs into the CT compartment.** In switchboards with multiple meters, the bus bars must extend from the termination section and service landing lugs to the meter sockets in multimeter boards.

S. Switchboard manufacturers must provide accessories, such as additional Belleville washers, at the time of delivery and/or installation.

T. Switchboards must meet all of the design and test conditions of Underwriters Laboratories (UL) UL891, "Standard for Switchboards."

U. Applicants must ensure that bus arrangement and supports are provided. An **exception** is the neutral bus, which may be located on either sidewall.

V. Applicants must locate the CT compartment on the supply side of the service-section main switch or breaker.

W. Applicants must ensure that only metering conductors pass through this CT compartment.

X. Applicants must ensure that a neutral, bus-bar extension is provided in the instrument transformer compartment **above** the lower CT bus support when the service-section phase buses are supplied from the horizontal cross busing.

Y. Applicants must ensure that the return flanges for the lower- and upper-meter panel supports do **not** project more than 3/4 inch up or down from the adjacent switchboard panels.

Z. Applicants must ensure that each bus has a connector that accepts a stranded conductor with the amp capacity of the service-section main switch or breaker.

AA. Applicants must ensure that the power-leg bus for a 4-wire delta service is identified.

AB. Applicants must ensure that a removable link is installed in the right-side phase bus when using the service section for three-phase, 3-wire service.

AC. Applicants must ensure that each switchboard service section is completely barriered from other service sections, pull sections, service switches, or disconnects. Barriers may have an opening to allow unmetered conductors to pass between sections. The barrier between sealed utility metering sections and the pull section must be 1/8 inch minimum, either glastic or equivalent. The clearance between the bus bar and glastic must be a maximum of 3 inches. No barrier is required between individual phases and the neutral.

10.3.4. Standard Switchboard CT Compartment, 0 Amps Through 1,200 Amps, Single-Phase or Three-Phase, 3-Wire Service

Applicants must ensure that the following requirements are met. These requirements apply specifically to this type of CT compartment.

A. The bus dimensions are a minimum of 1/4 inch by 2 inches and a maximum of 3/4 inch by 2 inches.

B. The barrier must be constructed of insulating, nontracking material.

C. The minimum clearance between the meter panel or socket and the bus is 6.5 inches up to 1,000 amps, and 7.5 inches for 1,200-amp compartments. If a clearance of 7.5 inches is not possible, use a 4-inch bus as required in Subsection 10.3.6., "Standard Switchboard CT Compartment, 1,001 Amps Through 3,000 Amps, Single-Phase or Three-Phase, 3-Wire Service," on Page 10-8.

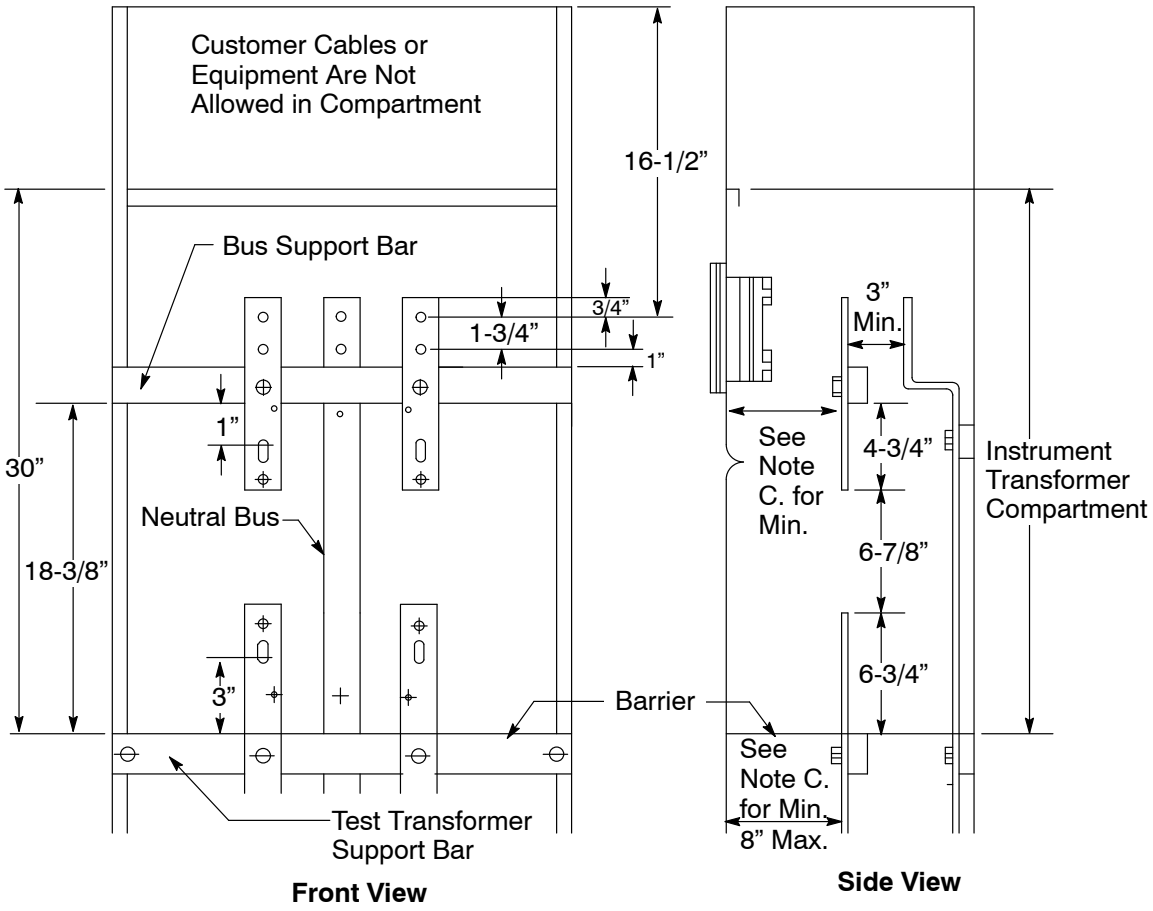

Figure 10-1
Standard Switchboard, CT Compartment, 0 Amps–1,200 Amps, Single-Phase or Three-Phase, 3-Wire Service

10.3.5. Standard Switchboard CT Compartment, 0 Amps Through 1,200 Amps, Three-Phase, 3-Wire and 4-Wire Services

Applicants must ensure that the following requirements are met. These requirements apply specifically to this type of CT compartment.

A. Ensure that the bus dimensions are a minimum of 1/4 inch by 2 inches and a maximum of 3/4 inch by 2 inches.

B. Ensure that the barrier is made of an insulating, nontracking material.

C. The minimum clearance between the meter panel or socket and the bus is 6.5 inches up to 1,000 amps and 7.5 inches for 1,200 amp compartments. If a clearance of 7.5 inches is not possible, use a 4-inch bus as required in Subsection 10.3.7. on Page 10-10.

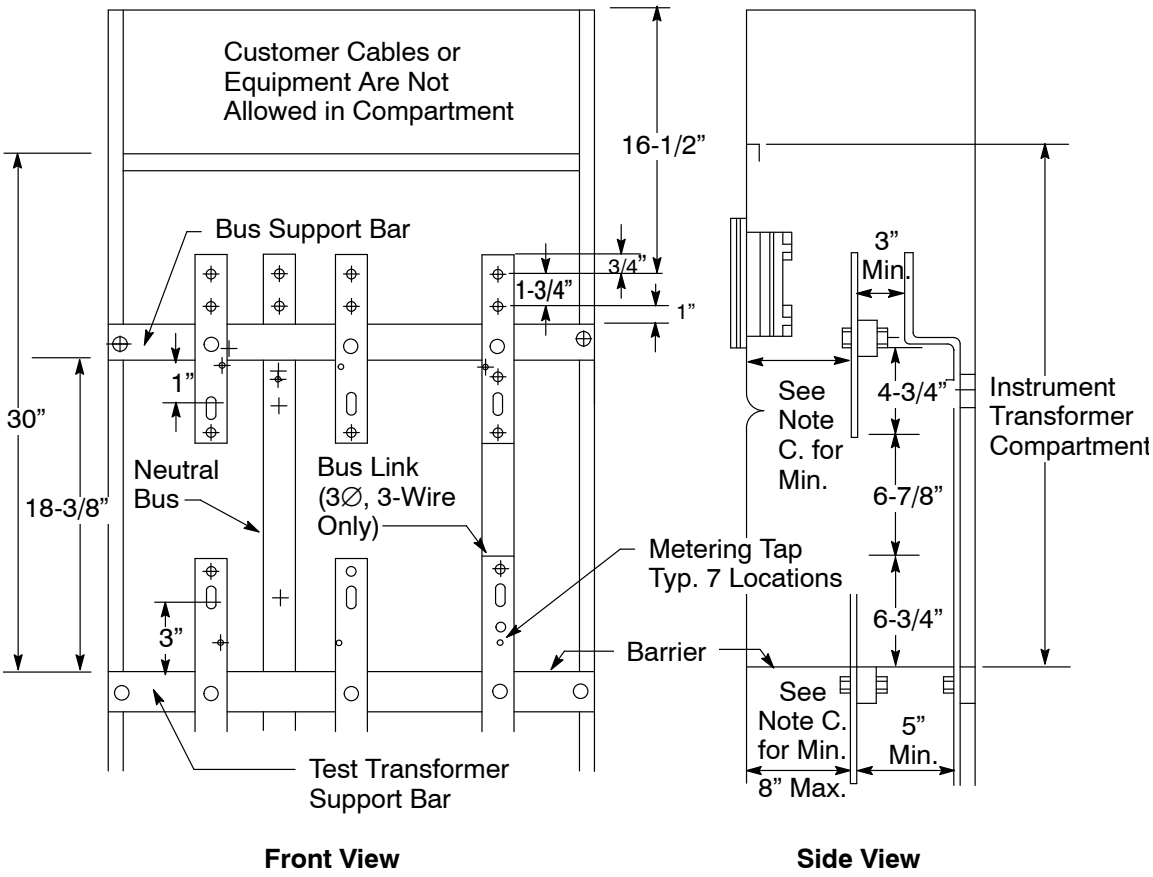

Figure 10-2
Standard Switchboard, CT Compartment, 0 Amps–1,200 Amps, Three-Phase, 3-Wire and 4-Wire Services

10.3.6. Standard Switchboard CT Compartment, 1,001 Amps Through 3,000 Amps, Single-Phase or Three-Phase, 3-Wire Service

The following requirements specifically apply to the CT compartment shown in Figure 10-3, "Standard Switchboard, CT Compartment, 1,001 Amps–3,000 Amps, Single-Phase or Three-Phase, 3-Wire Service," on Page 10-9. Applicants must:

A. Ensure that the buses are anchored so that they will remain in position when the removable section is out.

B. Ensure that the bus corners are rounded to prevent damaging the insulation.

C. For underground services, ensure that the buses extend into the pull section.

D. Be aware that the maximum permissible bus unit consists of four 1/4-inch by 4-inch bars spaced 1/4 inch apart.

E. Ensure that the barrier is a minimum of 45 inches and a maximum of 50 inches above the standing surface.

F. For a single-phase switchboard, ensure that the neutral bus is located at the side of the compartment.

G. Ensure that the switchboard manufacturer secures the removable bus link to the upper- and lower-CT bus units using 1/2-inch hex-head (Grade 5) steel bolts with 2-1/4-inch diameter Belleville washer and nut.

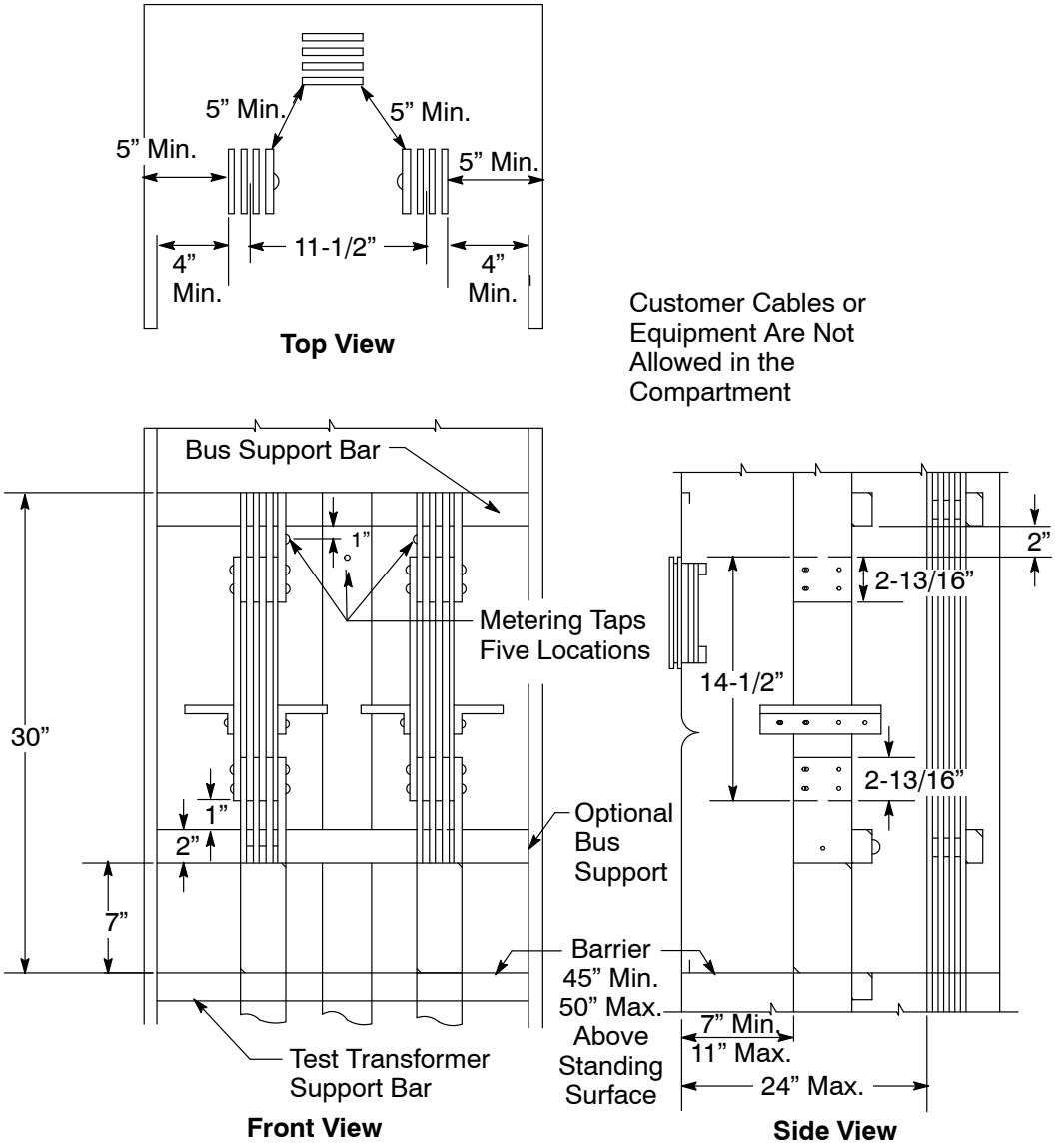

Figure 10-3
Standard Switchboard, CT Compartment, 1,001 Amps–3,000 Amps, Single-Phase or Three-Phase, 3-Wire Service

10.3.7. Standard Switchboard, CT Compartment, 1,001 Amps Through 3,000 Amps, Three-Phase, 4-Wire Service

The following requirements specifically apply to the CT compartment shown in Figure 10-4, "Standard Switchboard, CT Compartment, 1,001 Amps–3,000 Amps, Three-Phase, 4-Wire Service," on Page 10-11. Applicants must:

A. Ensure that the buses are anchored so that they will remain in position when the removable section is out.

B. Ensure that the bus corners are rounded to prevent damaging the insulation.

C. For underground services, ensure that the buses extend into the pull section.

D. Be aware that the maximum permissible bus unit consists of four 1/4-inch by 4-inch bars spaced 1/4 inch apart.

E. Ensure that the barrier is a minimum of 45 inches and a maximum of 50 inches above the standing surface.

F. Ensure that the switchboard manufacturer secures the removable bus link to the upper- and lower-CT bus units using 1/2-inch hex-head (Grade 5) steel bolts with 2-1/4-inch diameter Belleville washers and nuts.

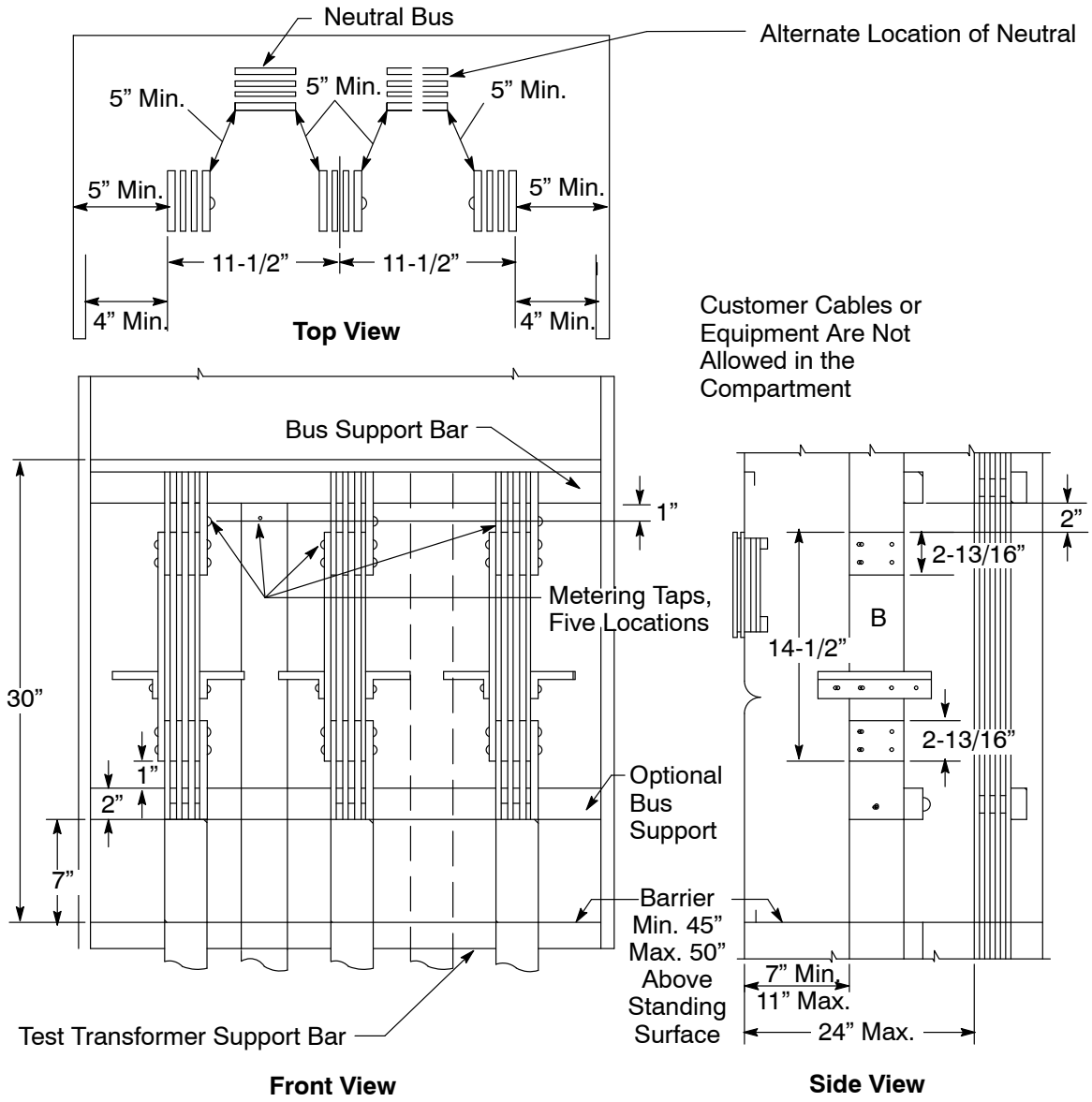

Figure 10-4
Standard Switchboard, CT Compartment, 1,001 Amps–3,000 Amps, Three-Phase, 4-Wire Service

10.3.8. Standard Switchboard CT Compartment, 3,001 Amps and Larger, Three-Phase, 3-Wire Service

The following requirements specifically apply to the CT compartment shown in Figure 10-5, "Standard Switchboard, CT Compartment, 3,001 Amps and Larger, Three-Phase, 3-Wire Service," on Page 10-13. Applicants must:

A. Ensure that the buses are anchored so that they will remain in position when the removable section is out.

B. Ensure that the bus corners are rounded to prevent damaging the insulation.

C. For underground services, ensure that the buses extend into the pull section.

D. Be aware that the maximum permissible bus unit consists of four 1/4-inch by 4-inch bars spaced 1/4 inch apart.

E. Ensure that the barrier is a minimum of 45 inches and a maximum of 50 inches above the standing surface.

F. Ensure that the switchboard manufacturer secures the removable bus link to the upper- and lower-CT bus units using 1/2-inch, hex-head (Grade 5) steel bolts with 2-1/4-inch diameter Belleville washers and nuts.

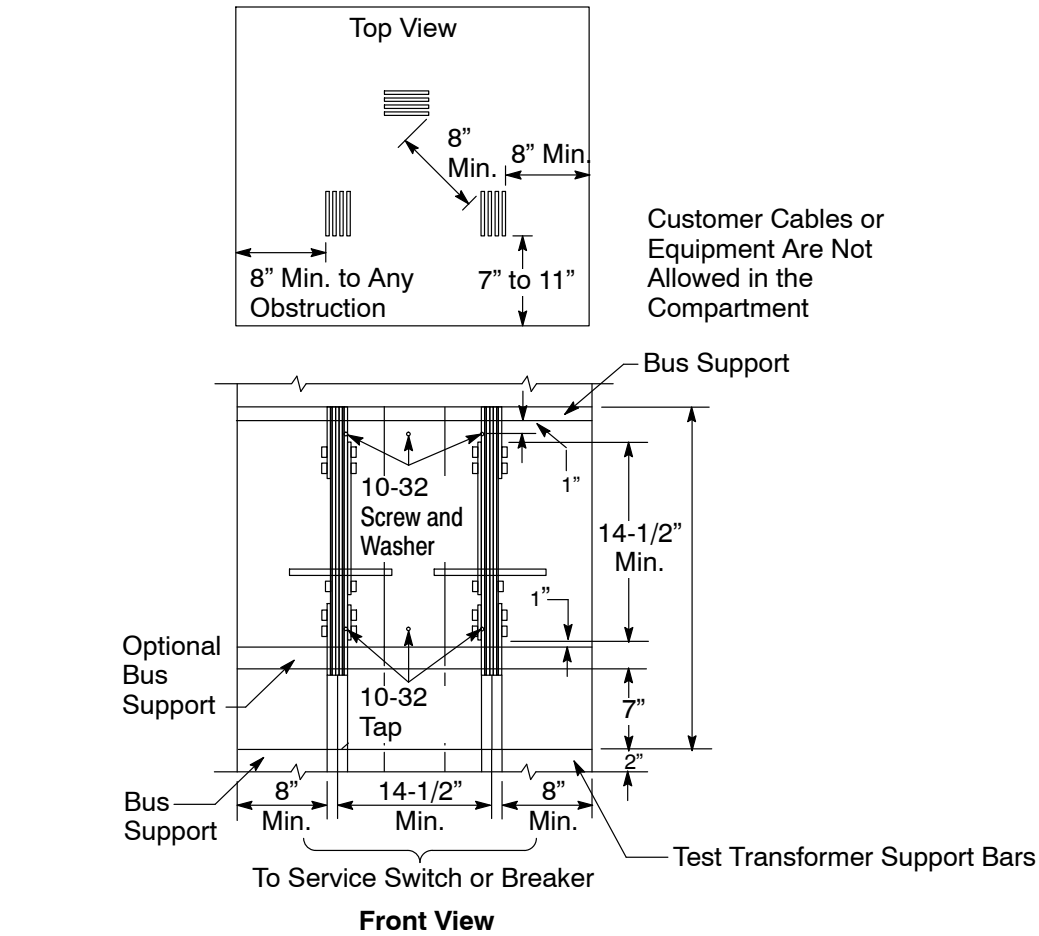

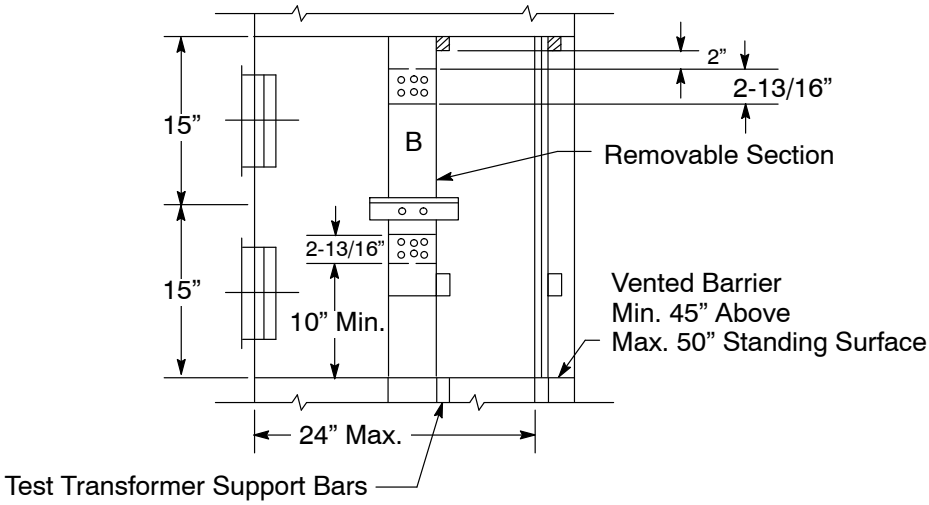

Figure 10-5
Standard Switchboard, CT Compartment, 3,001 Amps and Larger, Three-Phase, 3-Wire Service

10.3.9. Standard Switchboard CT Compartment, 3,001 Amps and Larger, Three-Phase, 3-Wire or 4-Wire Service

The following requirements specifically apply to the CT compartments shown in Figure 10-6, "Standard Switchboard, CT Compartment, 3,001 Amps and Larger, Three-Phase, 3-Wire or 4-Wire Service," on Page 10-15. Applicants must:

A. Ensure that the buses are anchored so that they will remain in position when the removable section is out.

B. Ensure that the bus corners are rounded to prevent damaging the insulation.

C. For underground services, ensure that the buses extend into the pull section.

D. Be aware that the maximum permissible bus unit consists of four 1/4-inch by 4-inch bars spaced 1/4 inch apart.

E. Ensure that the barrier is a minimum of 45 inches and a maximum of 50 inches above the standing surface.

F. Ensure that the switchboard manufacturer secures the removable bus link to the upper- and lower-CT bus units using 1/2-inch hex-head (Grade 5) steel bolts with 2-1/4-inch diameter Belleville washers and nuts.

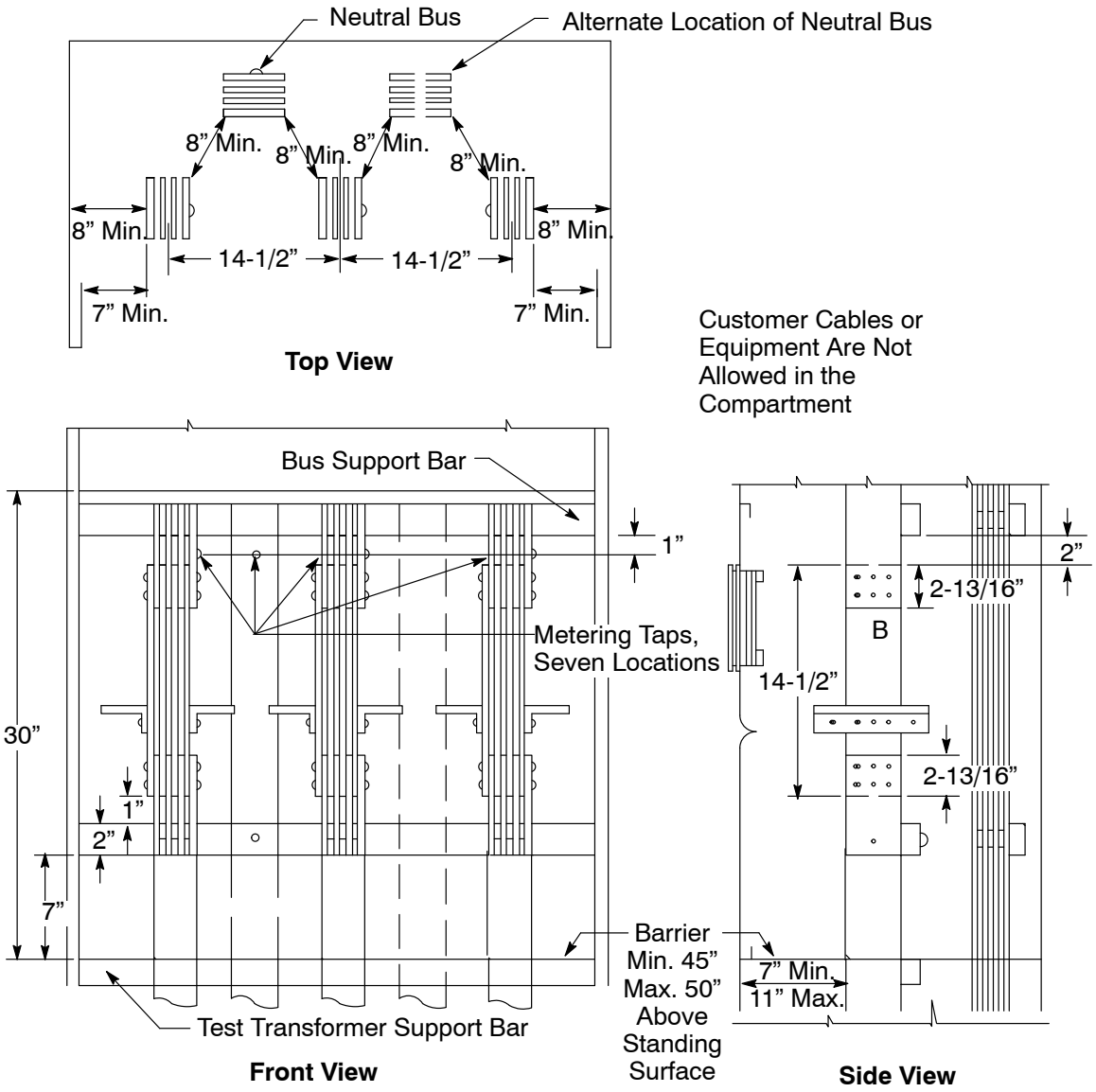

Figure 10-6
Standard Switchboard, CT Compartment, 3,001 Amps and Larger, Three-Phase, 3-Wire or 4-Wire Service

10.3.10. Removable Link Assemblies

The removable link assemblies for 0-volt through 600-volt CT compartments from 1,001 amps through 3,000 amps, and 3,001 amps and larger, are shown in Figure 10-7 through Figure 10-10 on Page 10-17 through Page 10-20.

Applicants may use either a one-bolt connection, as shown in Figure 10-7, “Switchboards, 0 Volts–600 Volts, CT Compartment, 1,001 Amps–3,000 Amps, Removable Link and CT Support (One-Bolt Configuration),” on Page 10-17, or a four-bolt connection, as shown in Figure 10-8, “Switchboards, 0 Volts–600 Volts, CT Compartment, 1,001 Amps–3,000 Amps, Removable Link and CT Support (Four-Bolt Configuration),” on Page 10-18, for switchboards that are rated 1,001 amps to 3,000 amps and have 4-inch buses installed.

For switchboards with 5-inch buses, use either two bolts, as shown in Figure 10-9, “Switchboards, 0 Volts–600 Volts, CT Compartment, 3,001 Amps and Larger, Removable Link and CT Support (Two-Bolt Configuration),” on Page 10-19, or six bolts, as shown in Figure 10-10, “Switchboards, 0 Volts–600 Volts, CT Compartment, 3,001 Amps and Larger, Removable Link and CT Support (Six-Bolt Configuration),” on Page 10-20.

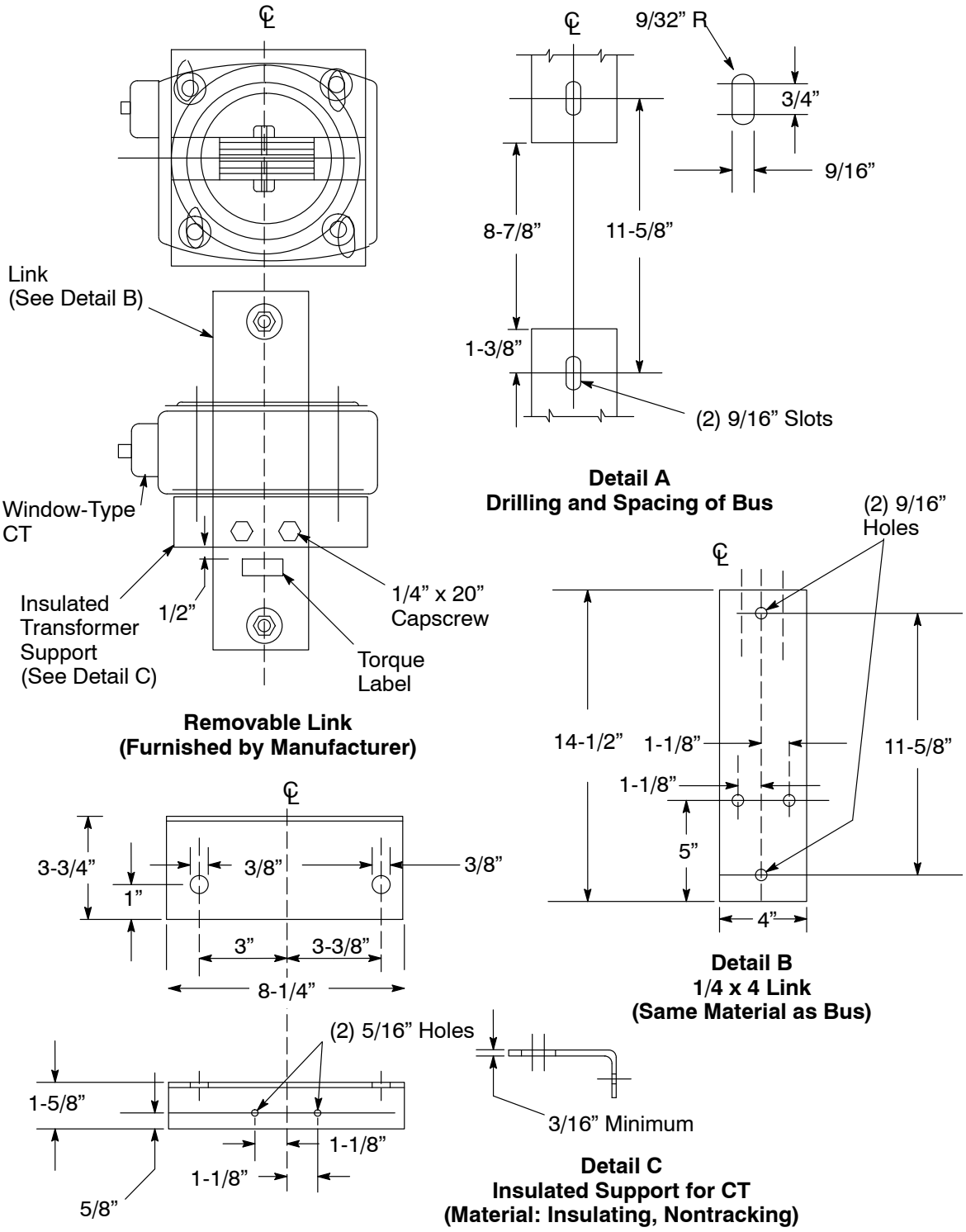

Figure 10-7
Switchboards, 0 Volts–600 Volts, CT Compartment, 1,001 Amps–3,000 Amps, Removable Link and CT Support (One-Bolt Configuration)

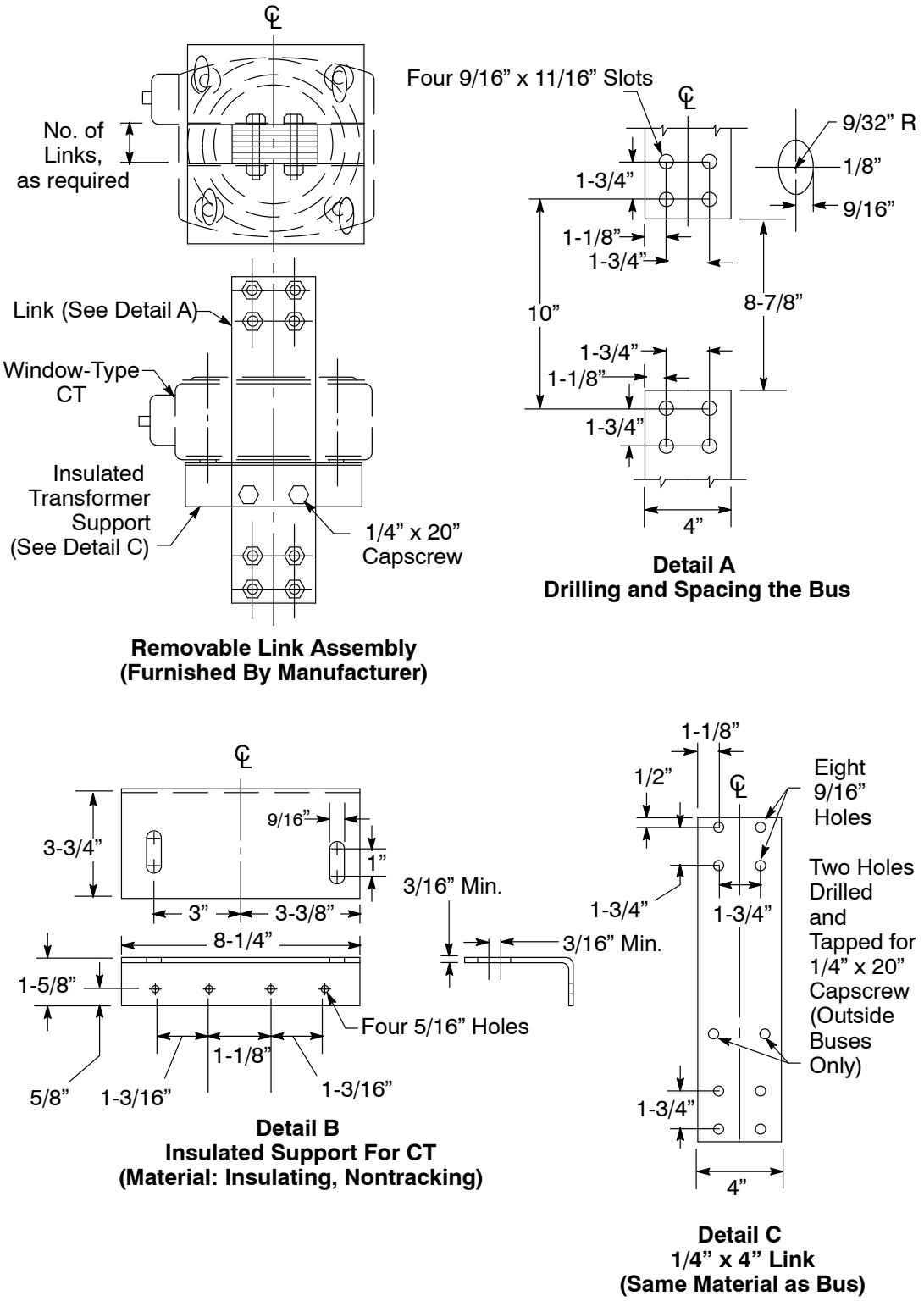

Figure 10-8
Switchboards, 0 Volts–600 Volts, CT Compartment, 1,001 Amps–3,000 Amps, Removable Link and CT Support (Four-Bolt Configuration)

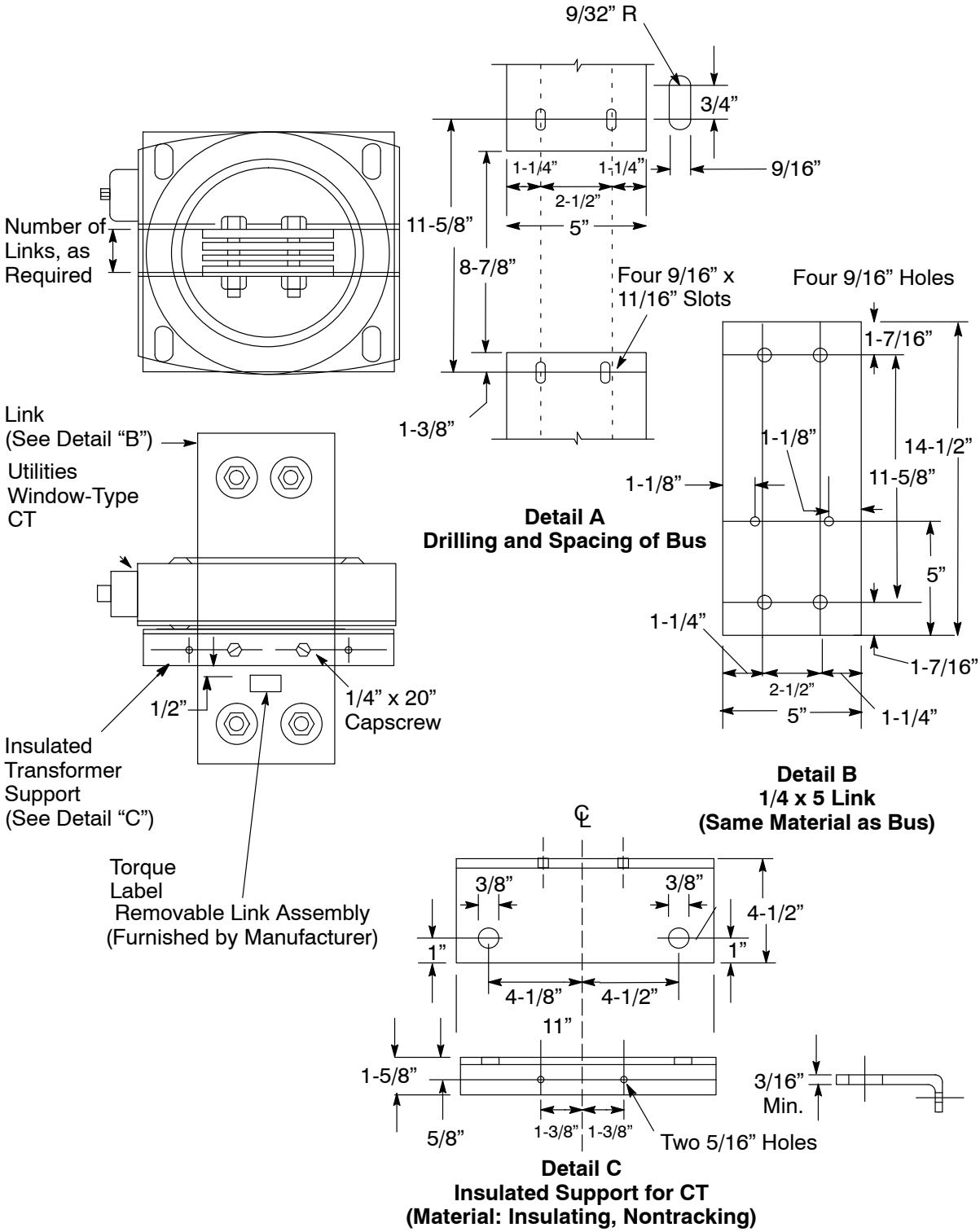

Detail A
Drilling and Spacing of Bus

Detail B
1/4 x 5 Link
(Same Material as Bus)

Detail C
Insulated Support for CT
(Material: Insulating, Nontracking)

Figure 10-9
Switchboards, 0 Volts–600 Volts, CT Compartment, 3,001 Amps and Larger, Removable Link and CT Support (Two-Bolt Configuration)

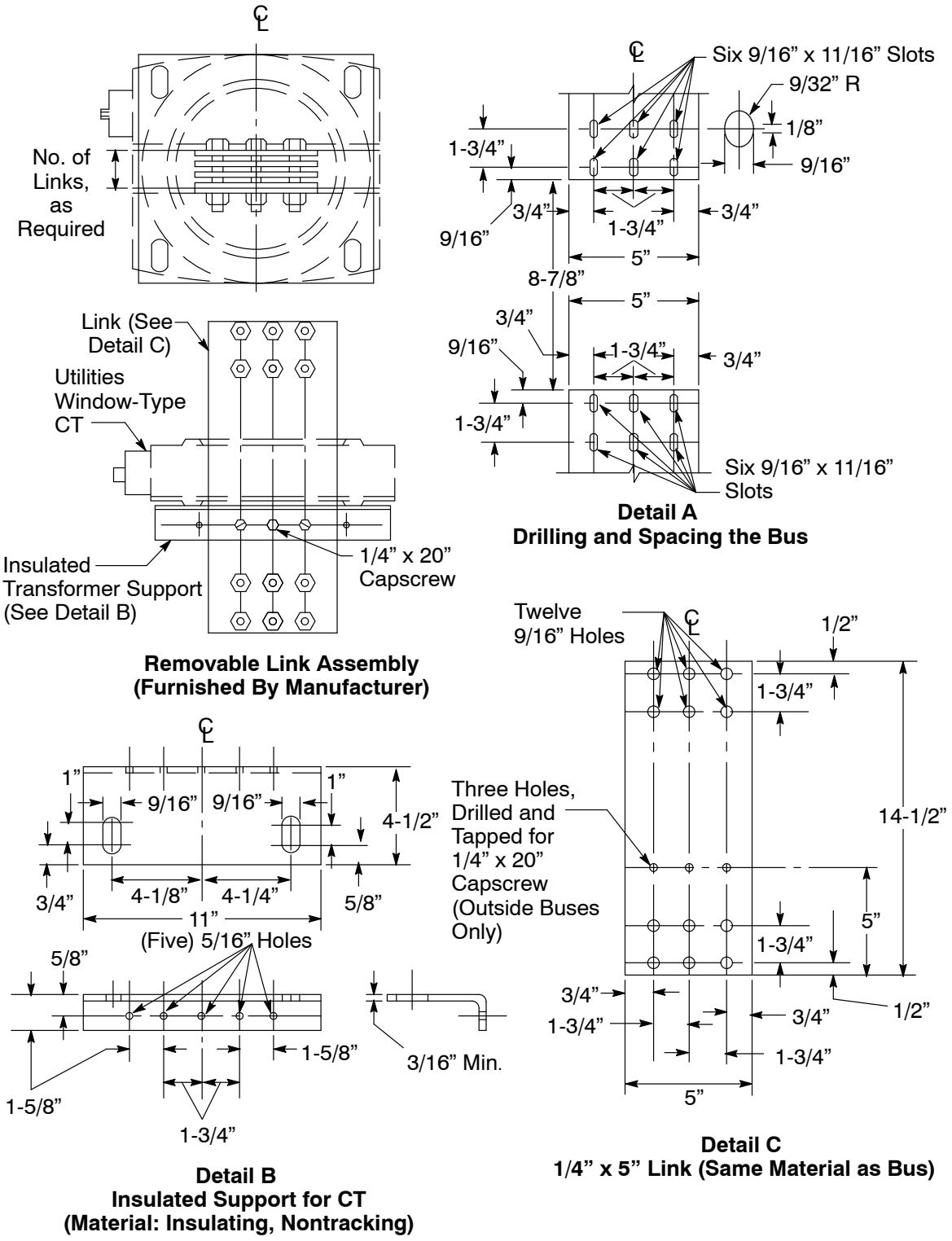

Removable Link Assembly (Furnished By Manufacturer)

Detail A
Drilling and Spacing the Bus

Detail B
Insulated Support for CT
(Material: Insulating, Nontracking)

Detail C
1/4" x 5" Link (Same Material as Bus)

Figure 10-10
Switchboards, 0 Volts–600 Volts, CT Compartment, 3,001 Amps and Larger, Removable Link and CT Support (Six-Bolt Configuration)

10.3.11. Standard Section for Self-Contained Meter Sockets, 0 Amps Through 225 Amps, Installed in Switchboards: Nonresidential

These requirements apply specifically to switchboard service sections for nonresidential, 0-amp through 225-amp meter sockets. Applicants must:

A. Ensure that the manufacturer furnishes, installs, and wires or buses the test-bypass blocks to the meter socket with four, rigid, insulating barriers. Test blocks must conform to the requirements described in Section 9, "Electric Metering: Components."

B. Ensure that the metered conductors do **not** pass through the adjacent metering compartments, except in enclosed wireways.

C. Ensure that the meter panels are removable with a maximum of two meters per panel.

D. Ensure that the cover panels for the test-bypass block are sealable and fitted with handles. Panels more than 16 inches wide must have two handles.

E. Ensure that outdoor or rain-tight enclosures are used, as shown in Figure 10-28 through Figure 10-31, "Outdoor or Rain-Tight Enclosures for Switchboards," on Page 10-38.

F. When a neutral is required for metering or testing, ensure that an insulated neutral terminal is provided behind each test-bypass cover panel. The terminal must be readily accessible when the cover panel is removed and must be individually connected to the neutral bus with a minimum Size #8 American wire gauge (AWG) copper wire.

G. Ensure that factory-installed, full-width, insulating barriers are located at the bottom of each test-bypass compartment. The insulating barrier must deflect a 1/2-inch maximum from a 25-pound downward force.

H. For three-phase, 4-wire service, ensure that the seventh jaw is connected to the body of the neutral lug with an AWG #12 copper wire.

I. For three-phase, 4-wire, delta-connected service, ensure that the right-hand, test-bypass block (i.e., two poles) is identified as a power leg.

J. For three-phase, 3-wire service, ensure that the bus is installed to connect the line and load poles together at the top of the center test-bypass block and the fifth jaw is connected to this bus using an AWG #12 copper wire.

K. For single-phase, 3-wire service, ensure that the center test-bypass block is omitted.

L. For single-phase, 3-wire, 120/208-volt service, ensure that the center test-bypass block is omitted and the fifth jaw is connected to the body of the neutral lug with an AWG #12 copper wire.

M. Ensure that the meter panels are removable. However, they must **not** be removable when the meter is in place. Ensure that the meter socket is attached to the meter panel, and yet is supported independently from the meter panel.

N. Ensure that each line and load position is identified clearly by using 3/4-inch (minimum) block-letter labeling.

O. Ensure that all of the meter panels are sealable and all of the securing screws are captive.

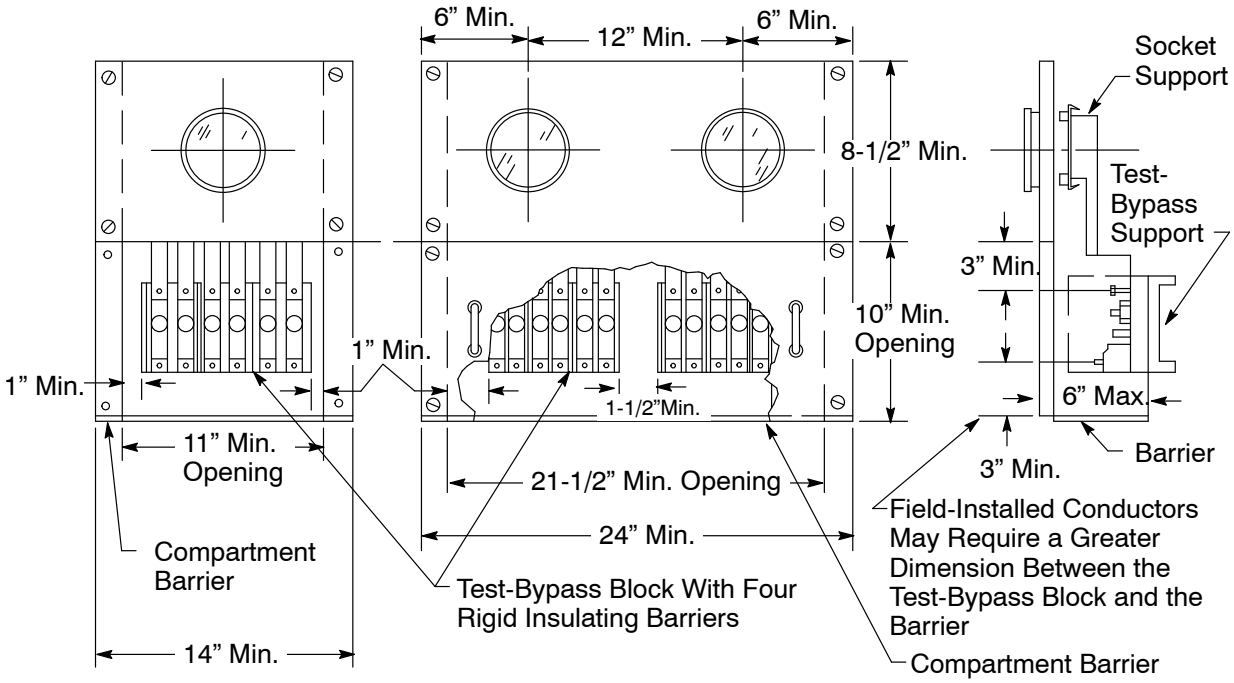

Figure 10-11
Standard Section for Self-Contained Meter Sockets, 0 Amps–225 Amps, Installed in Switchboards: Nonresidential

10.3.12. Service Terminations for Underground Services

NOTE: For overhead services where conductors go into the bottom-fed termination section, the applicant must connect the service-entrance conductors to the line side of the bus stubs in the metering-transformer compartment.

PG&E pulls and terminates its service conductors when terminating facilities that are provided by the applicant as shown in Figure 10-12, "Pull Section," Figure 10-13, "Separate Pull Box," and Figure 10-14, "Bottom-Fed Service Section," all on Page 10-24. The requirements for pulling and terminating service are provided in the following paragraphs.

Applicants must:

A. When the service section is served from a pull section, ensure that the bus or cable conductors enter in one of the following two ways:

   1. Enter through the side or back in the sealable section above the CT compartment, as shown in Figure 10-12 on Page 10-24.

   2. Enter by means of horizontal cross-busing in back of the metering compartment.

B. Ensure that all pull and terminating sections provide full-front access.

C. Ensure that all of the cover panels for the pull section have all of the following attributes:

   - Are removable and sealable.
   - Have two lifting handles.
   - Are limited to a maximum size of 9 square feet in area.

D. Ensure that the power leg for a 4-wire delta service is identified effectively at the point of termination **before** making the service connection.

E. Ensure that the minimum width of the pull section has the dimensions specified in Table 10-1, "Minimum Bottom-Fed Pull-Section Dimensions," on Page 10-24.

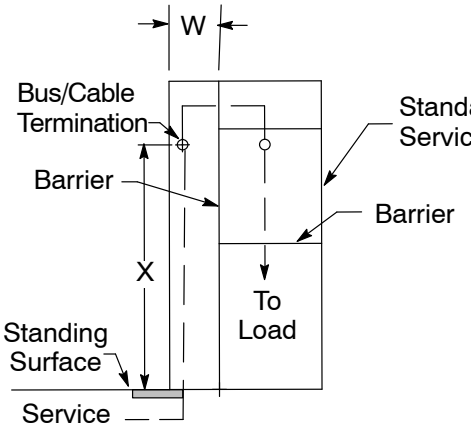

Figure 10-12
Pull Section

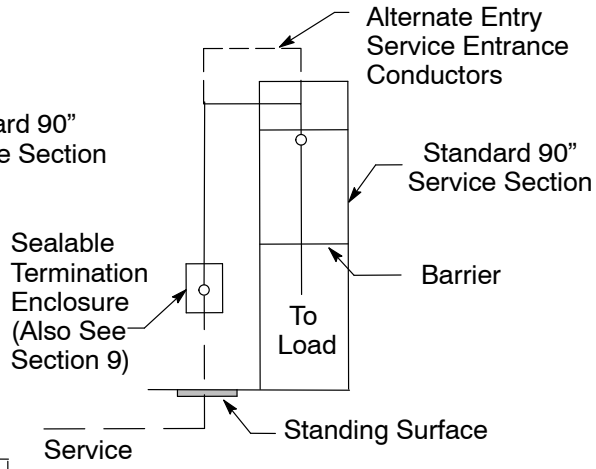

Figure 10-13
Separate Pull Box

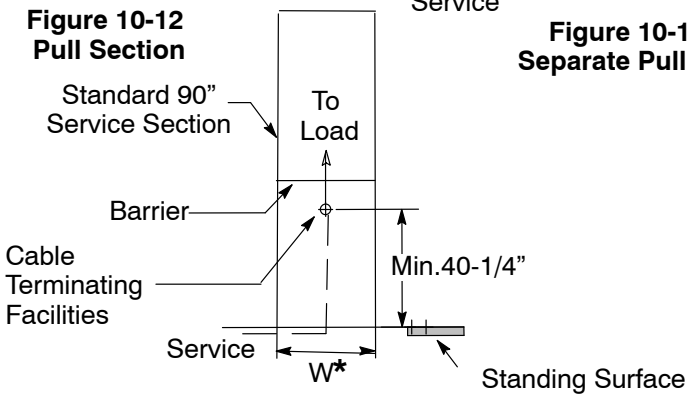

Figure 10-14
Bottom-Fed Service Section

* The minimum width of the pull section must meet the requirements specified in Table 10-1, below.

Table 10-1 Minimum Bottom-Fed Pull-Section Dimensions

Switchboard Rating (Amps)	Minimum Access Opening Dimension (W)[2]		Termination Height X
	3-Wire	4-Wire	
Below 400	Consult Serving Agency (All Measurements in Inches)		
400–800	24	24	42 Min.[1]–72 Max.
801–1,200	24	30	
1,201–2,000	30	35	
2,001–2,500	—	42	60 Min.–72 Max.
2,501–4,000	Bus Duct		

1 See Figure 10-14, “Bottom-Fed Service Section,” on Page 10-24, for the minimum termination height of a bottom-fed service section.

2 If the landing stubs in the termination bus are installed perpendicular to the back of the board, PG&E requires the enclosure dimensions to be wider to accommodate the cable installation.

10.3.13. Underground, Service-Termination Pull Section (Located Below Ground Level)

Applicants must follow the requirements in this subsection when underground, service-termination pull sections are located below the ground level.

NOTE: To prevent the accumulation of water in meter rooms, refer to Subsection 3.3.7., "Providing Drainage From the Conduit System," on Page 3-10.

A. **Back Entry:** When a service must enter the back of a switchboard pull section, as shown in Figure 10-15, "Switchboard Pull Section, High Entry," located on Page 10-26, the pull space must have the required X dimension above or below the cable-terminating facilities. The pull sections must also have the required W dimension, as shown in Table 10-2, "Pull Section Dimensions (Minimums) Below Ground Level," located on Page 10-27.

B. **Side Entry:** When a service must enter the side of a switchboard pull section, as shown in Figure 10-15 on Page 10-26, and in Figure 10-16, "Switchboard Pull Section, Low Entry," on Page 10-26, the pull-space must have the required X dimension above or below the cable-terminating facilities. The pull sections must also have the required W dimension, as shown in Table 10-2.

C. **Additional or Extended Section Entry:** When it is not possible to meet the requirements of dimension X because the service cannot enter the upper or lower areas of the switchboard pull section, or because additional space is needed, another enclosure can be attached to the termination section enclosure. Figure 10-17, "Extended Top on Switchboard Pull Section," on Page 10-27, Figure 10-18, "Additional Side or Back Switchboard Pull Section-High Entry," on Page 10-28, Figure 10-20, "Additional Side or Back Switchboard Pull Section, Low Entry," on Page 10-32 show examples of how another enclosure provides additional space for the cables to enter the termination section either low or high enough to meet the X dimension and facilitate proper cable termination. PG&E recommends that applicants submit drawings for review before installing an additional enclosure and applicants to attend a pre-inspection meeting.

D. **Conduit:** Service conduit installed in the franchise area (i.e., public property) must not be at a depth greater than 60 inches. Conduit entering the switchboard must be group together in a maximum of two rows and centered horizontally in the pull-section wall.

E. **X Dimension:** The X dimension is the measured distance from the horizontal center position of the termination bus to the closest service conduit installed in the pull section for Figure 10-15 on Page 10-26 through Figure 10-17 on Page 10-27. When an additional pull section is used, as shown in Figure 10-18 on Page 10-28 and Figure 10-19 on Page 10-29, the X dimension is measured from the horizontal center position of the termination bus to the closest position where the service cable will enter into the termination section.

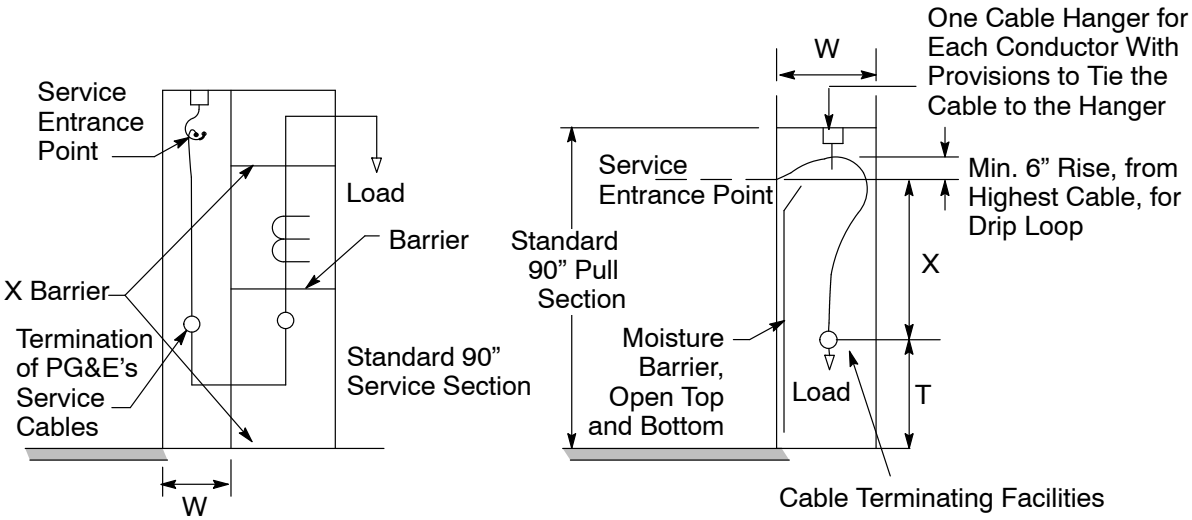

Figure 10-15
Switchboard Pull Section, High Entry

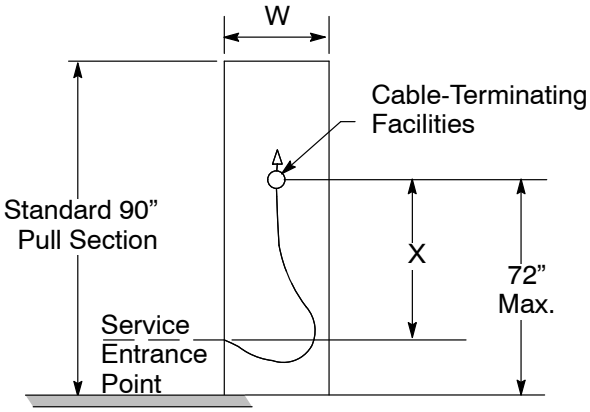

Front View (Side Entry) or Side View (Back Entry)

Figure 10-16
Switchboard Pull Section, Low Entry

Table 10-2 Pull-Section Dimensions (Minimums) Below Ground Level

Switchboard Rating in Amps	W [1, 2]		X[3]	T
	1∅ 3-Wire	3∅ 4-Wire	Side or Back Entry	Termination Height
	Measurements in Inches			
201–800	24	24	42	24
801–1,200	24	30	42	24
1,201–2,000	30	35	45	24
2,001–2,500	—	42	60	18
2,501–4,000	Bus Duct			

1 Ensure that the dimension (i.e., width, depth, and height) of the additional pull section are exactly the same as the terminating section.

2 If the landing stubs in the termination bus are installed perpendicular to the back of the board, PG&E requires the enclosure dimensions to be wider to accommodate cable installation.

3 See Item E., “X Dimension,” on Page 10-25.

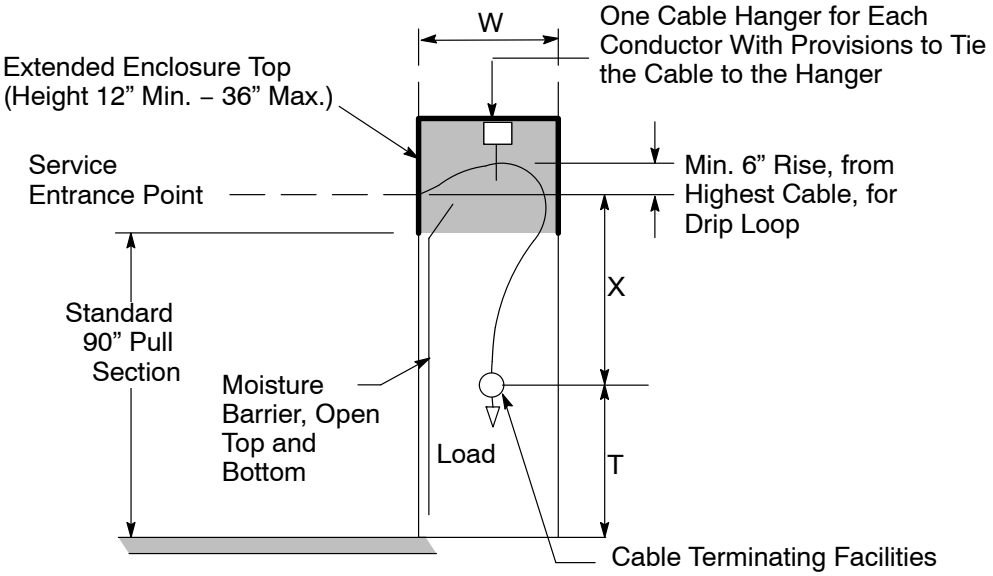

Figure 10-17
Extended Top on Switchboard Pull Section
Front View (Side Entry) or Side View (Back Entry)

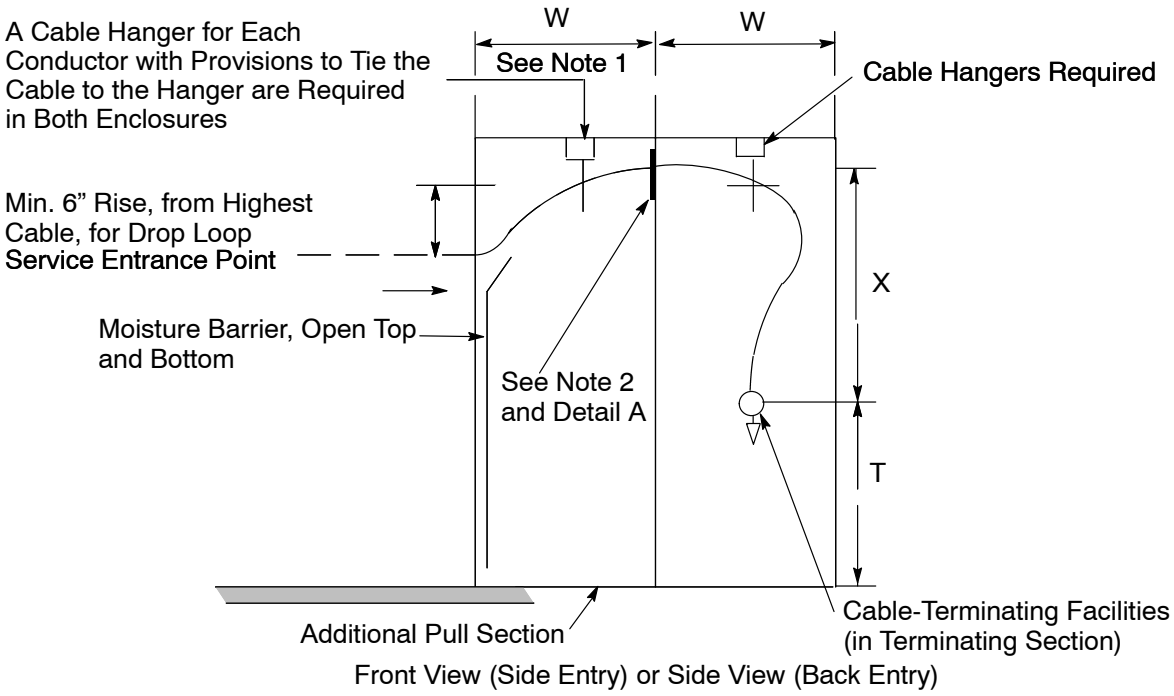

Figure 10-18
Additional Side or Back Switchboard Pull Section, High Entry

Notes in reference to Figure 10-18.

1. Ensure that the dimensions (i.e., width, depth, and height) of the additional pull section are exactly the same as the terminating section.
2. The height of the cable entrance window must be between 24 inches to 36 inches and the width must be a minimum of 20 inches. The edges of the window opening must be insulated to prevent damaging the cables. See Detail A, below.

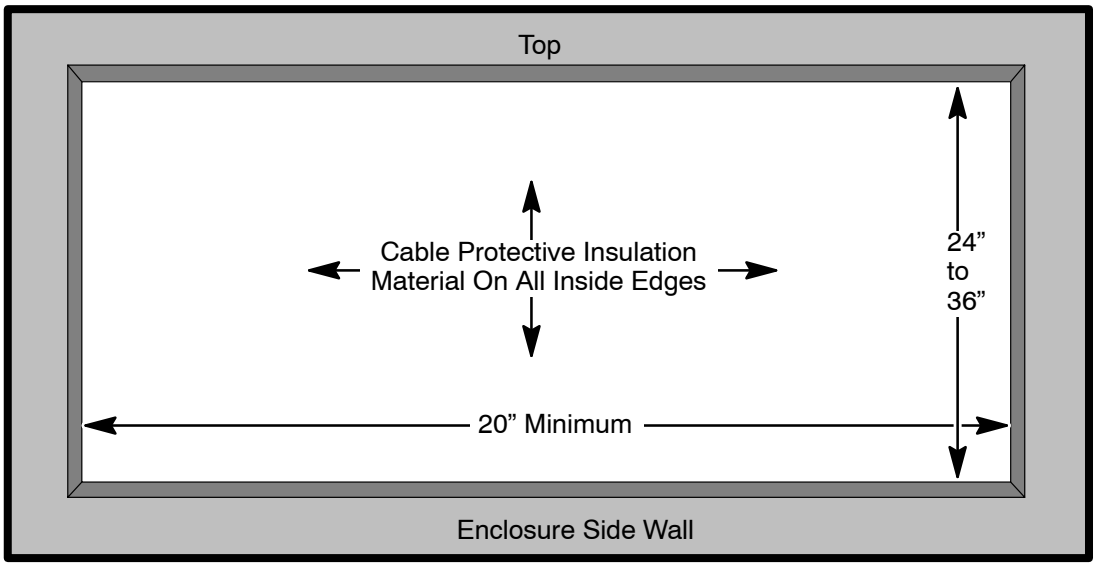

Detail A - Cable Entrance Window

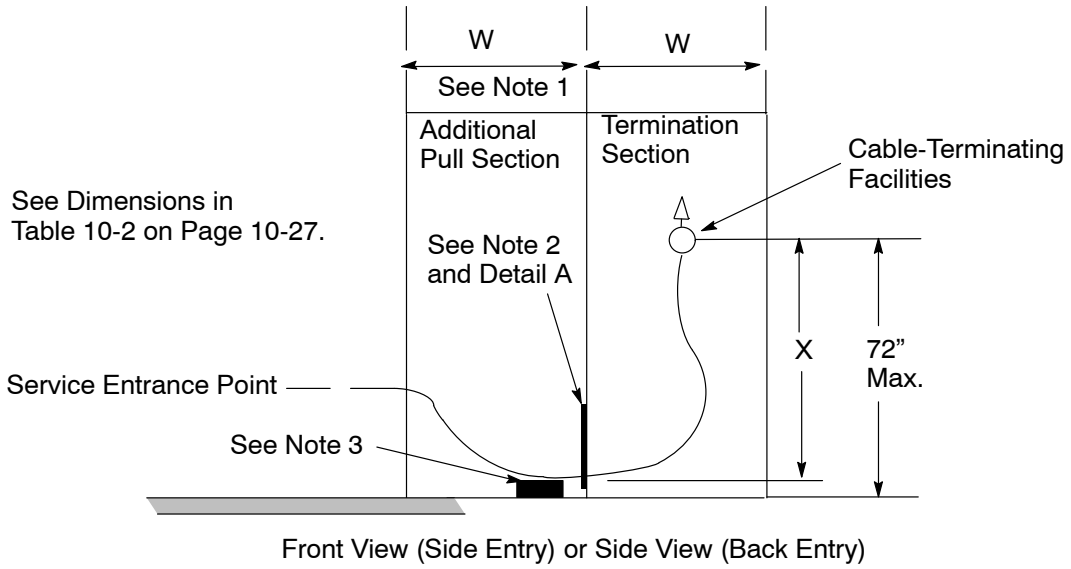

Figure 10-19
Additional Side or Back Switchboard Pull Section, Low Entry

Notes in reference to Figure 10-19.

1. Ensure that the dimensions (i.e., width, depth, and height) of the additional pull section are exactly the same as the terminating section.
2. The height of the cable entrance window must be between 24 inches to 36 inches and the width must be a minimum of 20 inches. The edges of the window opening must be insulated to prevent damage to the cables. See Detail A on Page 10-28.
3. Cables must not lie on the ground. The customer must provide a cable support system to keep the cables off of the ground. Otherwise cable blocks must be supplied using PG&E Material Code 362118.

10.3.14. Underground, Cable-Terminating Facilities in Pull Boxes or Pull Sections

Figure 10-20 through Figure 10-23, all on Page 10-32, provide diagrams and required dimensions for cable-terminating facilities in the pull boxes or pull sections. The following paragraphs describe the requirements for applicants who install these facilities. Applicants must:

A. Ensure that one landing position per phase is available for each 400 amps of service capacity, as shown in Figure 10-20, "Landing Terminal Detail," on Page 10-32. Also, applicants must ensure that provisions have been made for stacking lugs.

B. Ensure that bolts are provided with nuts, flat washers, and pressure-maintaining spring washers.

C. Ensure that all parts are plated to prevent corrosion.

D. Ensure that bolts are secured in place unless working access is provided on both sides of the mounting bus. If both sides of the bus are accessible, one set of bolts may be used to provide two terminal-mounting positions, one on either side of the bus.

NOTE: "Secured in place" means the stud will not turn, back out, or loosen in any manner when subjected to normal, UL-approved torques while tightening or loosening terminal nuts. This includes cross-threaded situations.

E. In the terminal-mounting area, ensure that a radial clearance of 1-1/2 inches is provided between any bus (including bolts) and any other bus (including horizontal cross-busing) or grounded surface, as shown in Figure 10-21, "Spacing Requirements," on Page 10-32.

EXCEPTIONS: The following are exceptions from these requirements.

1. The minimum clearance to the back of the pull section or to the front of the pull-section cover may be 1 inch.
2. The neutral bus or termination may have a minimum clearance of 1 inch from any grounded surface.
3. Service cables passing over horizontal cross busing must have a minimum 2-1/2-inch radial clearance. This distance may be reduced to 1 inch if the horizontal bus is fully insulated.

F. Ensure that each cable-mounting position has at least 8 inches of unobstructed space in front of the entire mounting surface when all of the conductors are in place. This space must be accessible from the front of the pull section.

G. Ensure that the bus stubs are firmly secured to prevent bus misalignment and movement when the cables are installed. See Figure 10-22, "Buses Accessible From Only One Side (Bolts Must Be Secured in Place)," and Figure 10-23, "Buses Accessible From Either Side (Mounting Surfaces on Both Sides of Bus)," both on Page 10-32, for bus stub details through 2,500 amps.

H. For nonresidential services, either single or three phase, 600 amps and above, PG&E requires applicants to install multiple sets of service conduit. Additionally, PG&E will require applicants to supply stacking lugs for terminating its cables in any installation that is rated nonresidential, three phase, 1,200 amps or greater.

I. For nonresidential services, additional space (i.e., depth, width, and termination height) may be required in any section of switchboard, panelboard, or other enclosure used to terminate PG&E service cables. This additional space may be necessary to provide proper clearances between phases and grounded surfaces, as well as to accommodate the installation of service cable.

J. Applicants should review Numbered Document 063928, "Methods and Requirements for Installing Commercial Underground Electric Services 0–600 Volts to Customer-Owned Facilities," for the appropriate conduit and cable requirements for nonresidential service installations. Find this document in Appendix C. "Electric and Gas Engineering Documents."

K. PG&E does **not** allow applicants to install wall-mounted cable termination and pull enclosures for nonresidential, three-phase installations rated at 401 amps through 2,500 amps. For those installations, PG&E requires a switchboard pull section or enclosure meeting the requirements shown in Table 9-4, "Minimum Pad-Mounted (Floor-Standing) Switchboard Pull-Section Dimensions: Residential and Nonresidential, Single-Phase and Three-Phase," on Page 9-11, and Table 10-1, "Minimum Bottom-Fed Pull-Section Dimensions," on Page 10-24, for bottom entry. Also, see Table 10-2, "Pull Section Dimensions (Minimums) Below Ground Level," on Page 10-27, for side or back entry.

L. See additional requirements in Section 9.10., "Underground Service Cable-Termination Section or Pull Box," on Page 9-10. The information, tables, and figures provide additional requirements for applicants who install wall-mounted and pad-mounted cable-termination and pull-section equipment.

NOTE: The utility point of service (i.e., service point) is defined as the approved enclosure and the terminated or spliced connections.

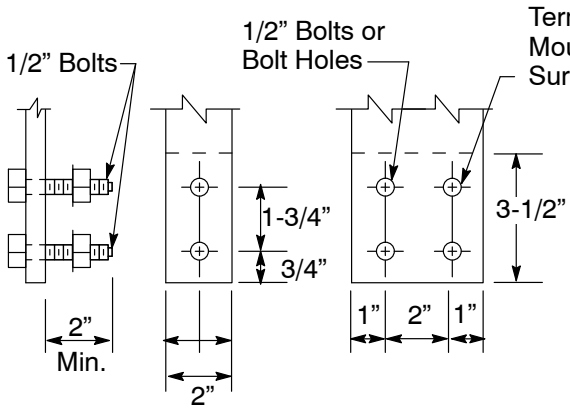

Figure 10-20
Landing Terminal Detail

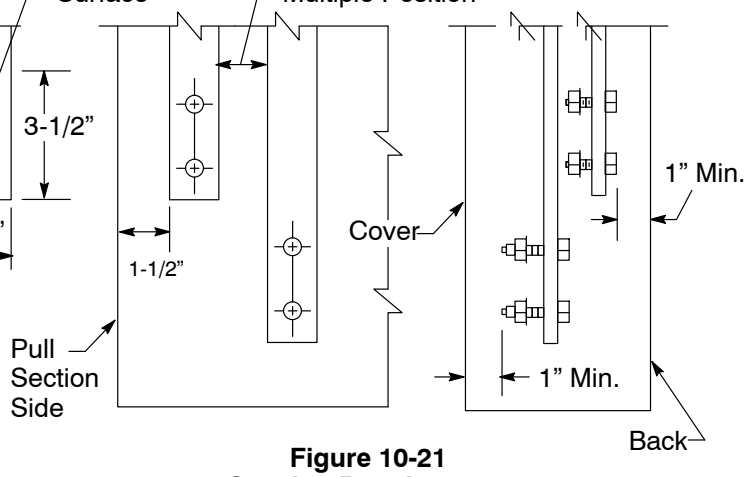

Figure 10-21
Spacing Requirements

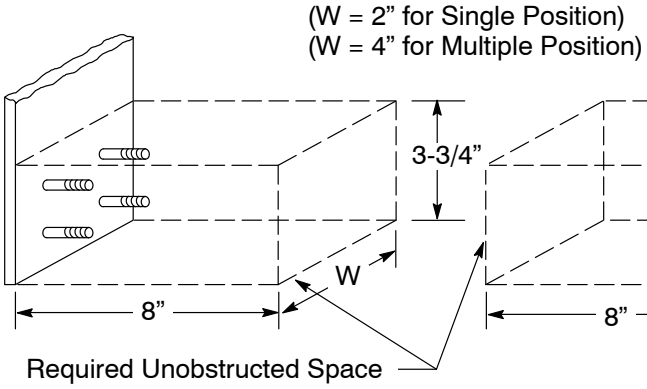

Figure 10-22
Buses Accessible From Only One Side
(Bolts Must Be Secured in Place)

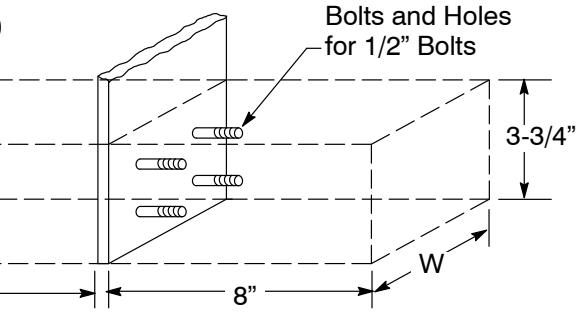

Figure 10-23
Buses Accessible From Either Side
(Mounting Surfaces on Both Sides of Bus)

10.4. Meter and Switch Sequence Requirements

PG&E will locate meters and metering equipment ahead of (i.e., on the supply side) the applicant's main switch and fuse or circuit breaker. Exceptions to this normal sequence are permitted only when required by electric codes and as allowed by PG&E.

10.5. Metering Transformer Compartments

The following requirements apply to applicants who are installing metering transformer compartments.

A. Bus the CT compartments using a rectangular bus bar. See Figure 10-1 through Figure 10-6 on Pages 10-6 through 10-15 for more information.

B. Ensure that the covers for metering transformer compartments are:

- Constructed of 12-gauge steel (minimum).
- Provided with lifting handles.
- Attached with sealable studs and wing nuts or using other approved means.

C. Use a copper or aluminum bus bar on both the line sides and load sides of all CTs. When links and supports are required for through-type CTs, ensure that the bus and removable links are constructed of a compatible material.

D. Do **not** use PG&E's CTs for any purpose but metering.

E. Do **not** use the metering transformer compartment as a splicing or tap-making chamber.

F. Do **not** use the bolts required for connecting a CT to attach other conductors.

10.6. Meter Panels

The following requirements apply to applicants who are installing meter panels.

A. Except for remote metering enclosures, use **only** hinged meter panels in front of a metering transformer compartment. The meter panel must be hinged next to the test facilities.

B. Ensure that the dual-socket metering panel is provided in switchboards supplying a demand load of 400 kilovolt amperes (kVA) or more. See Table 10-3, "Dual-Socket Hinged-Meter Panel Requirement," below. Provide two 15-inch panels, shown in Figure 10-26 on Page 10-36, or one 30-inch panel, shown in Figure 10-27 on Page 10-37.

C. Ensure that meter panels are constructed of 12-gauge steel (minimum) and are sealable, hinged, and reversible. Because the meter panels are reversible, the hinges can be used on either the right side or the left side of the panels.

D. Note that the width of meter panels may sometimes require the service section to be wider than the minimum-allowable width of the transformer compartment.

E. Mount self-contained meters on nonhinged panels, as shown in Figure 10-11 on Page 10-22.

Table 10-3 Dual-Socket, Hinged, Meter-Panel Requirement

Service Voltage	Switchboard Supply Rating	Panel Required
277/480V 3∅, 4-Wire	401 Amps and Above	Yes
120/240V 3∅, 4-Wire	801 Amps and Above	Yes
120/208V 3∅, 4-Wire	1,001 Amps and Above	Yes

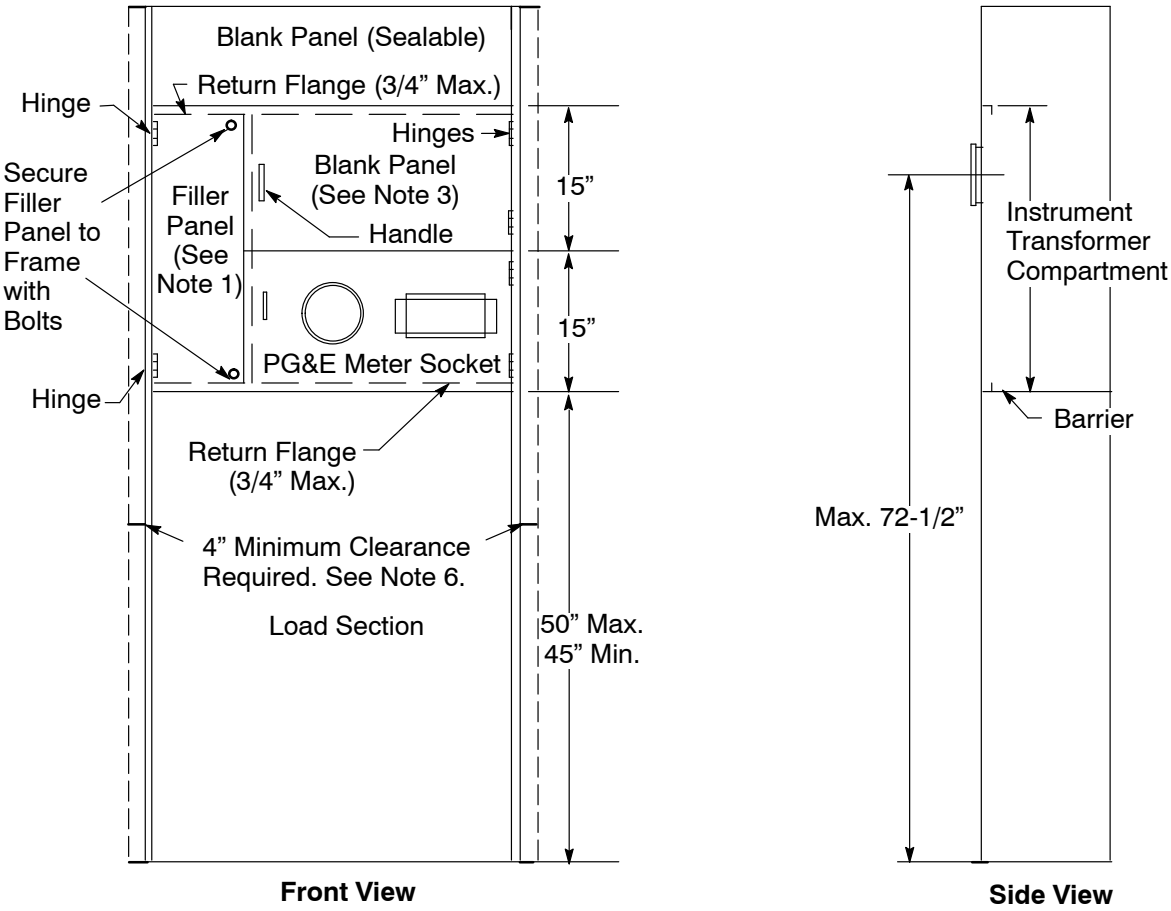

Figure 10-24
Standard Switchboard Service Section With CT Compartment and Filler Panel, 0 Volts–600 Volts

Notes in reference to Figure 10-24.

1. Use filler panels where the switchboard width exceeds the allowable meter panel width. It is allowed to hinge meter panels to hinged filler panels only if the filler panel is bolted to the switchboard in both corners of the filler panel opposite the hinges.
2. Make the grounding connection in the main switch or breaker compartment.
3. In a split-panel arrangement, mount the kilowatt-hour (kWh) meter panel in the lower position.
4. Equip meter panels and filler panels with stops to prevent the panels from swinging inward beyond the front surface of the switchboard.
5. Ensure that all panels and covers are sealable.
6. Ensure that the meter panels can open 90° with the meter and test facilities in place. Ensure there is at least 4 inches of minimum clearance on the side where the meter panel door opens outward.

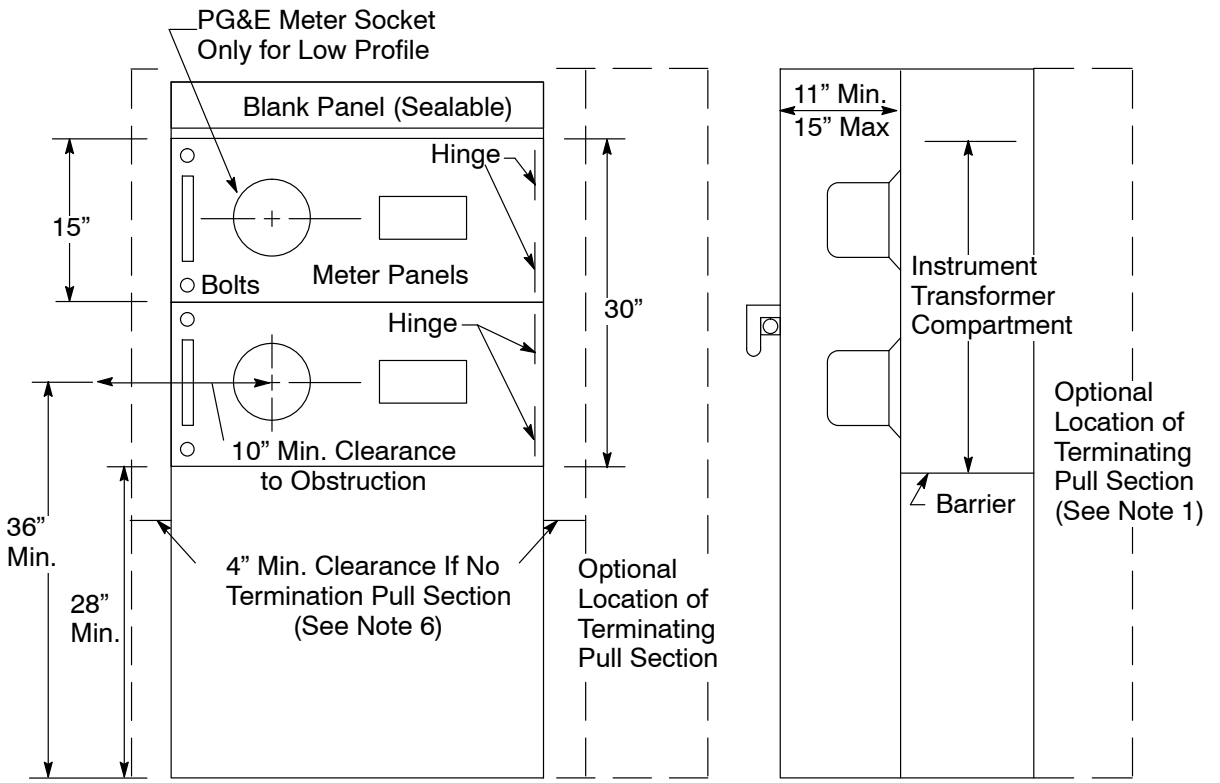

Figure 10-25
Low-Profile Switchboard Service Section With CT Compartment for Underground, Outdoor Application, 0 Volts–600 Volts

Notes in reference to Figure 10-25.

1. Locate the terminating pull section beside or behind the instrument compartment.
2. Use filler panels where the switchboard width exceeds the maximum-allowable meter panel width. It is allowed to hinge meter panels to hinged filler panels only if the filler panel is bolted to the switchboard in both corners of the filler panel opposite the hinges.
3. Make the grounding connection in the main switch or breaker compartment.
4. Equip meter panels and filler panels with stops to prevent the panels from swinging inward beyond the front surface of the switchboard.
5. Ensure that all panels and covers are sealable.
6. Ensure that the meter panels can open 90° with the meter and test facilities in place. Ensure there is at least 4 inches of minimum clearance on the side where the meter panel door opens outward.
7. Only for low-profile switchboards. Place the PG&E meter socket on the top panel.

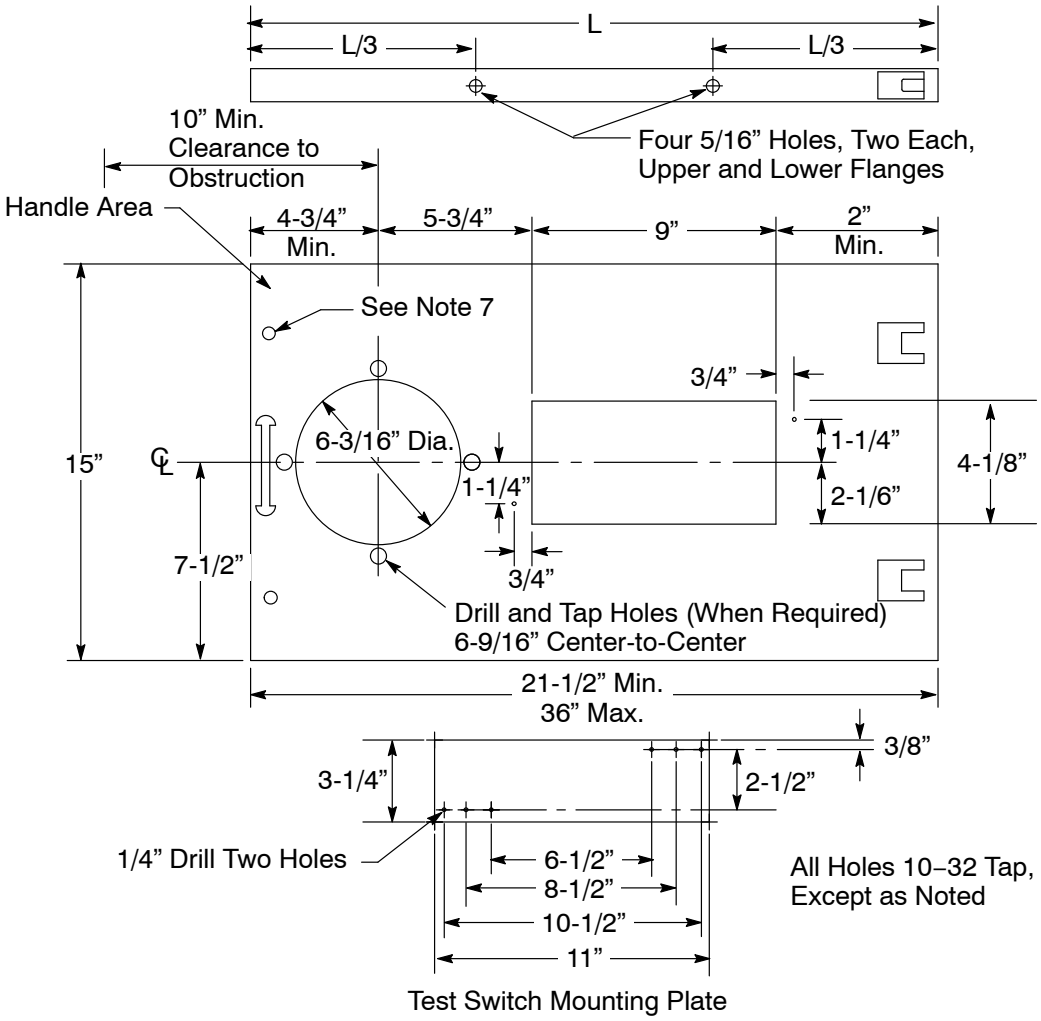

Figure 10-26
Standard Switchboard Service Section, 15-Inch Hinged Panel for Socket Meter and Test Switch

Notes in reference to Figure 10-26.

1. Ensure that the switchboard manufacturer drills, taps, and slots the panel for the secondary test switch, as shown. Also, ensure that the switchboard manufacturer furnishes and installs the socket with a sealing ring.
2. Design the meter sockets to be installed on hinged panels for back (rear) connection.
3. Use the outdoor or rain-tight enclosures shown in Figure 10-28 through Figure 10-30 on Page 10-38.
4. Attach a handle at the unsupported end of the meter panel. Leave a minimum clearance of 1 inch from the handle to the meter socket.
5. Ensure that hinges can support a 25-pound load applied at the unsupported end with a maximum 1/8-inch sag when the panel is open.
6. Secure removable plates to the rear of the panel using screws that do **not** protrude through the face of panel.
7. Ensure that the meter panels can open 90° with the meter and test facilities in place.
8. Ensure that all securing screws and sealing screws on the panels are captive. Studs and wing nuts must be sealable, when they are used.
9. Ensure that hinges are interchangeable and can be used on either the right side of the left side of the meter panels. When using clevis-type or removable pin-type hinges, ensure that the pin can be removed from the type of the meter panel.

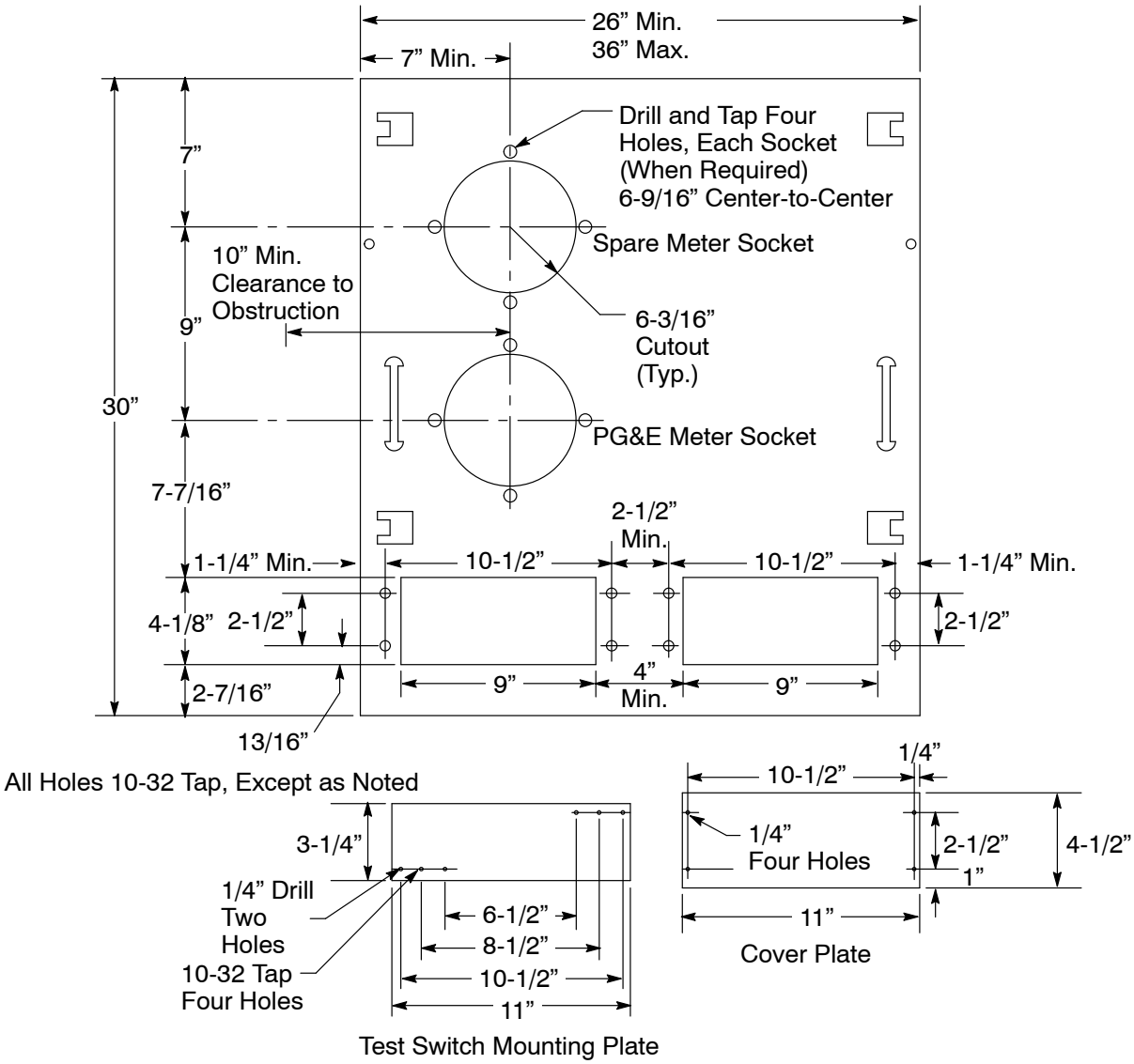

Figure 10-27
Standard Switchboard Service Section, 30-Inch Panel for Socket Meters and Test Switches

Notes in reference to Figure 10-27.

1. Meter socket openings may be on either the right or the left side of the panel.
2. Ensure that the switchboard manufacturer drills, taps, and slots the panel for the secondary test switch, as shown. Also, ensure that the switchboard manufacturer furnishes and installs the socket with a sealing ring.
3. Paint the removable plates and attached them to the panel.
4. Construct meter panels of 12-gauge steel (minimum). Ensure they are hinged and sealable.
5. Ensure that hinges are interchangeable and can be used on either the right side or the left side of the meter panels. When using clevis-type or removable pin-type hinges, ensure that the pin can be removed from the top of the meter panel.
6. Ensure that hinges can support a 25-pound load applied at the unsupported end with a maximum 1/8-inch sag when the panel is open.
7. It is allowed to hinge meter panels to hinged filler panels only if the filler panel is bolted to the switchboard in both corners of the filler panel opposite the hinges.

Notes in reference to Figure 10-27, continued.

8. Ensure that a hinged meter panel can be opened 90° with the meter and test facilities in place. When working with either recessed or enclosed meter panels, see Figure 10-28 below.
9. Ensure that the panel has a handle attached on both sides.
10. All securing screws and sealing screws on the panel must be captive. Stud and wing nuts must be sealable, when they are used.
11. Design the meter sockets to be installed on hinged panels for back (i.e., rear) connection.
12. For panel widths of less than 26 inches, consult your local PG&E meter shop.

10.7. Transformer-Rated and Self-Contained Switchboards

Applicants may use switchboards consisting of a main disconnect (if required), individual meter sockets, and associated circuit breakers or switches for individually metered, multiple occupancies supplied from one service. Figure 10-28, Figure 10-29, and Figure 10-30, below, show standard switchboard service-section detail for transformer-rated meter sockets. Figure 10-31, below, shows standard switchboard service-section detail for self-contained meter sockets rated from 0 amps through 225 amps.

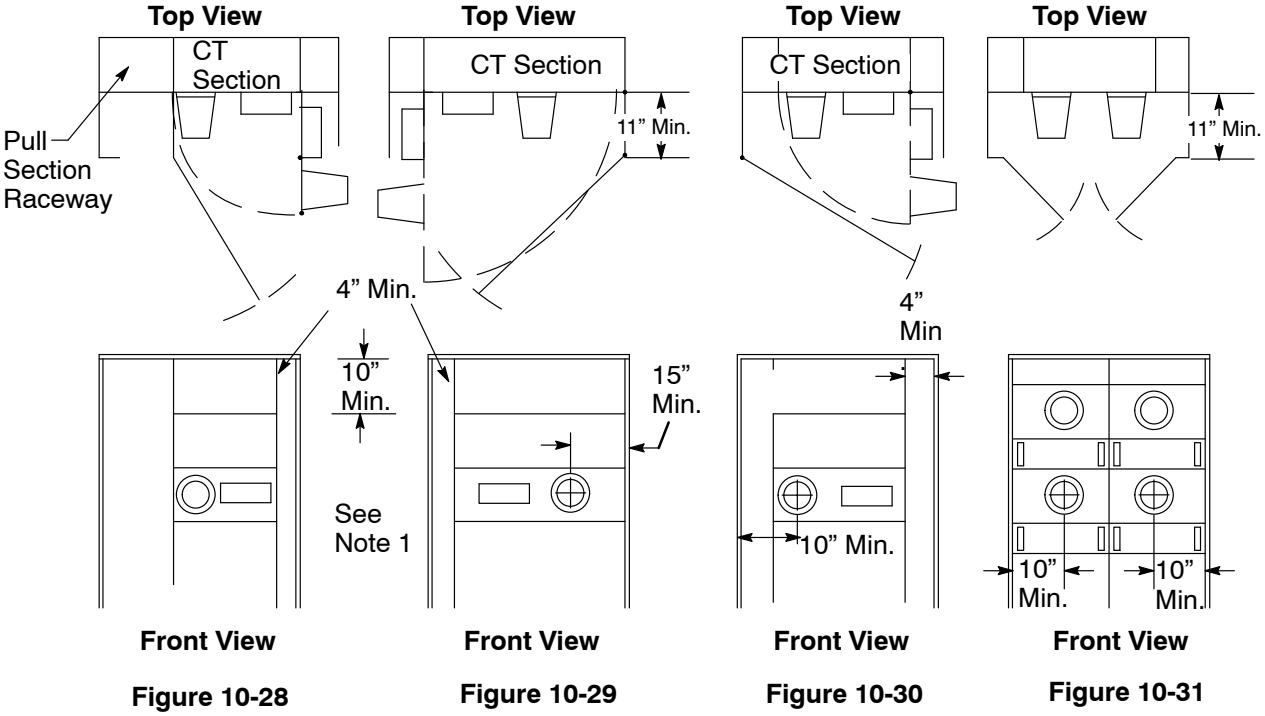

Figure 10-28 Figure 10-29 Figure 10-30 Figure 10-31

Outdoor or Rain-Tight Enclosures for Switchboards

Notes in reference to Figure 10-28, Figure 10-29, Figure 10-30, and Figure 10-31.

1. Ensure that hinged meter panels and enclosure doors can be opened at least 90° with meter and test facilities in place.
2. For hinged meter panel designs, see Figure 10-24 on Page 10-34 and Figure 10-25 on Page 10-35.
3. Ensure that enclosure doors can be secured in the 90° open position.
4. For approved enclosure-locking provisions, see Section 5, Subsection 5.3.4., "Electric Meter Rooms," on Page 5-7.
5. Ensure that outdoor or rain-tight enclosures are used.

10.8. Adding New Metering Equipment to Existing Switchboards

When applicants want to install a new meter panel or meter section and connect to the load side of an existing switchboard, the required method is to extend the bussing from the last meter section of the existing switchboard into the new meter section. Please contact the local project coordinator before interconnecting and adding load. Project coordinators must ensure that the existing PG&E facilities are upgraded, when necessary.

If the new meter panel or meter section cannot be connected to the end of the switchboard, the interconnection may be allowed, at PG&E's discretion, in the utility termination section of the switchboard only if **all** of the following conditions below are met.

A. The total aggregated ampacity of the new panel or new section plus the existing switchboard metering sections is **not** greater than the existing switchboard's total (supply) ampacity rating. See Table 10-4, "Adding Up Meter Section Ampacities," and Figure 10-32, "Existing Switchboard," both on Page 10-40, to calculate the ampacities.

B. PG&E calculates the new total demand load and, if needed, installs the additional service conductors required to meet that load. A larger transformer may also be required because of the new total demand load.

C. PG&E identifies available spare landing positions on the terminating facilities. The spare landing positions are in addition to the number of landing positions required in Subsection 10.3.14., "Underground, Cable-Terminating Facilities in Pull Boxes or Pull Sections," on Page 10-29, that must be reserved for existing and future installation of additional cables.

D. The utility service termination section (typically 90 inches high) does not contain a main breaker compartment or a metering compartment. This termination section is dedicated only for terminating PG&E service cables. See Figure 10-32, "Existing Switchboard," on Page 10-40.

If all of the conditions described above are met and PG&E approves the installation of the new meter panel or meter section, applicants must follow the applicable instructions provided in Item E. and Item F. below.

E. Overhead Service: Applicants must locate the taps in a sealable compartment that is located above and separated from the CT and/or metering equipment compartment.

F. Underground Service: Applicants must ensure that the taps are located in the underground service-termination pull section or pull box. In this instance, the applicant must ensure that the bus conductors terminate in a suitable, approved manner. Also, the applicant must ensure that the bus conductors are positioned so that the customer's incoming, service-entrance conductors and the tap connections do not encroach into PG&E's pulling area or interfere with PG&E's pull and termination facilities for service-lateral conductors.

NOTE: Due to various types of configurations and arrangements of switchboard compartments in some termination sections, the interconnection may not meet all of the requirements listed above and will be denied. One example is when the PG&E metering compartment or the customer's main breaker compartment is directly above the utility termination section. See Figure 10-24 on Page 10-34.

Table 10-4 Adding Up Meter Section Ampacities[1]

Example	Supply Section Ampacity Rating	Meter Section #1 Ampacity Rating	Meter Section #2 Ampacity Rating	Aggregated Ampacity of All Metering Selections	New Meter Equipment Tap Allowed?
1	2,000	1,200	800	1,200 + 800 = 2,000	No. Column 5 is not less than Column 2.
2	2,000	1,000	600	1,000 + 600 = 1,600	Yes. Column 5 is less than Column 2. A new meter panel < = 400 amps is allowed.

[1] Only two meter sections are shown as an example. Add up the ampacities for all meter sections and meter panels connected to the switchboard.

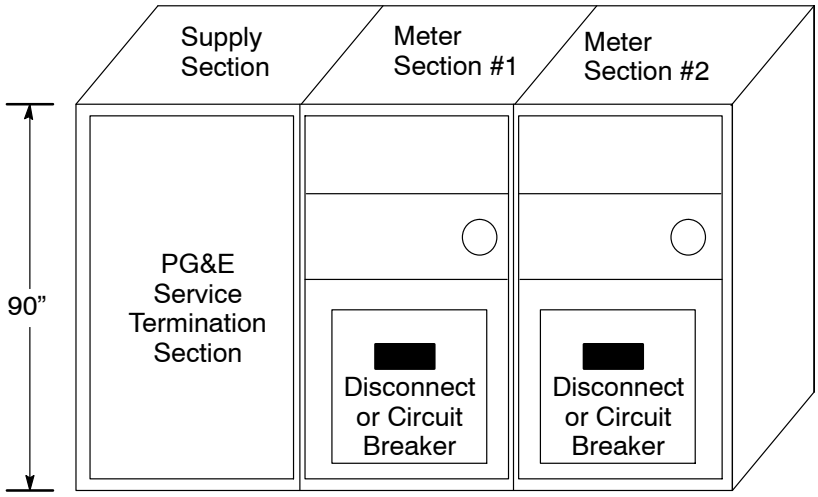

Figure 10-32
Existing Switchboard

Section 11
Electric Switchboards: 601 through 25,000 Volts

Section 11 Electric Switchboards: 601 Through 25,000 Volts and Primary Services

Section 11
Electric Switchboards: 601 Volts Through 25,000 Volts and Primary Services

11.1. Scope

This section of the manual provides application and installation details for high-voltage switchboard metering equipment ranging from 601 volts through 25,000 volts.

11.2. General Requirements

The following general requirements apply when installing high-voltage electric switchboards and primary services.

Find reference information for interconnections and primary services in Subsection 11.4., "Interconnection Requirements and Primary Services," on Page 11-10.

A. The specific switchboards voltages represented in this section are:

- 2,400
- 4,160
- 12,000
- 17,200
- 20,780

B. Applicants must ensure that manufacturers contact PG&E **before** fabricating the switchboards and request the specific information listed below.

- Service voltage, phase, and wiring.
- Meter panel requirements for the applicable rate schedule.
- Service-termination location.
- Switchboard and/or meter location.
- Size and number of service conductors.
- Other information and specifications necessary for fabricating switchboards (e.g., *Equipment Utility Service Requirements Committee* [*EUSERC*] manual, Section 400 requirements).

C. A manufacturer must submit three sets of drawings of the proposed equipment to PG&E for pre-approval **before** manufacturing the equipment. The drawings must include the contractor's name and address, the applicant's name, and the job location. Field-design changes are **not** permitted without obtaining PG&E's approval before making the changes.

NOTE: Employees perform a field inspection of the switchboard at the jobsite. The switchboard is approved only when it meets all of the specified requirements.

D. PG&E must furnish and install fuses for voltage transformers (VTs), as well as for the following equipment.

- Meters
- Metering transformers
- Test switches
- All secondary wiring from the metering transformers to the meters

When more than one switchboard is required, install a separate service section. Ensure that it is separated completely (i.e., barriered) from other service sections, pull sections, or service switches and disconnects.

11.3. Specific Requirements for High-Voltage Switchboards

The applicant must ensure that the equipment described below is provided and that the included construction requirements are followed precisely when installing high-voltage switchboards.

A. Provide and install the insulation barrier between the potential transformer (PT) disconnect switches and the PT section. The voltage disconnect switch **must** be visible when the instrument transformer door and the outer door of the switchboard are opened.

B. Ensure that the insulated cables and conductors are made available to PG&E. PG&E personnel will make the connections between the PT fuse holders and metering PTs. Use only the “no-load” types of PT disconnect switches.

C. Provide individual pulling eyes above each of the current transformer (CT) positions to aid CT lifting.

D. Ensure that all ground buses are solid bus bars with dimensions of at least 1/4 inch x 2 inches. Ground buses must be constructed from either **copper** or **aluminum**.

E. Do **not** use flex braid on any section of ground buses.

F. Ensure that a ground bus bar is used for the PT disconnect.

G. Ensure that ground buses do **not** obstruct internal compartments, openings, conduits, or accesses to utility facilities, equipment, or extended work areas.

H. Ensure that the ground bus is located in front of the panel to provide better accessibility for any work to be performed. This includes the PT section.

I. Only use a gang-operated disconnect. The disconnect must have grounds in a blade-and-jaw configuration when it is opened. Do **not** use fused-drawer disconnect devices or fused, removable, section-type disconnect devices.

J. Ensure that workspaces and clearances meet the required state and local codes. **Ensure that there is an unobstructed, 8-foot area cleared in front of all access doors.** This area is required for installing and removing PG&E’s safety grounds. Maintain this clearance area at all times.

K. Concrete floors or pads must extend out in front of the whole area a minimum of 96 inches, as measured from the outside of the equipment's outer doors. See the requirements in Section 5.4.4., "Working Space," on Page 5-11.

L. Ensure that a neutral lug is provided in the PT section. Use this lug to terminate the neutral circuit that is connected to the ground bus section on the CT compartment.

M. Ensure the requirements in Section 5, "Electric Metering: General," Subsection 5-2, "Applicant Responsibilities," are followed.

N. Ensure that permanent marking or labeling, indicating the service voltage being supplied, is included on all electric meter panels and all equipment doors or panels that provide access to the service terminations, PTs, and CTs.

O. Provide a bare bus that is 4 inches above **and** below the CTs. PG&E will use this bare bus as a safety ground.

P. Ensure that the primary taps for PTs are connected to the line side of the metering CTs.

Another alternative allows applicants to mount the meter panel in front of the CT termination compartment if, when the meter panel is open, the compartment is isolated fully by a removable or hinged barrier. This barrier must be sealable using stud and wing assemblies.

Connect the primary taps for the PTs only to the **line side** of metering CTs.

Q. To attach the safety grounds, install ball studs (1/2-inch through 13-inch threads with insulating covers) on the line and load side of the CT bus units. Locate the studs less than 7 inches from the end of the bus unit and orient them toward the compartment access opening. Also, install two ball studs on the ground bus inside the CT compartment.

R. Ensure that the maximum amount of operating force required to open and close a PT disconnect switch is no more than 50 foot-pounds.

S. **Install 2 ground rods and conduits for the primary service as shown in Figure 11-1, "Primary Switchboard Termination Section Pad Detail," on Page 11-4.** These two ground rods are in addition to others already installed for the switchboard.

T. Submit a termination section drawing detail on all of the switchboard drawings submitted to PG&E. The drawing detail should show the position of the conduit(s), ground rods, and additional internal components. Refer to Figure 11-1 on Page 11-4.

U. Install a transparent, insulated, inner door as a safety barrier in front of the termination section, and CT section (if separate), for all switchboards 601 volts through 25,000 volts. Construct the safety door from a solid piece of clear acrylic that is a minimum 6 millimeters (or 1/4 inch) thick and resistant to damage by impact or puncture. Ensure the acrylic is rated for the voltage served. The safety door must extend from the top to the bottom of the section. Cover all energized parts on the switchboard and maintain all clearances. The acrylic door must be operable with hinges on one side, and a handle and provisions to secure the door in the open and closed positions on the opposite side. **Include and label the door on all switchboard drawings submitted to PG&E.**

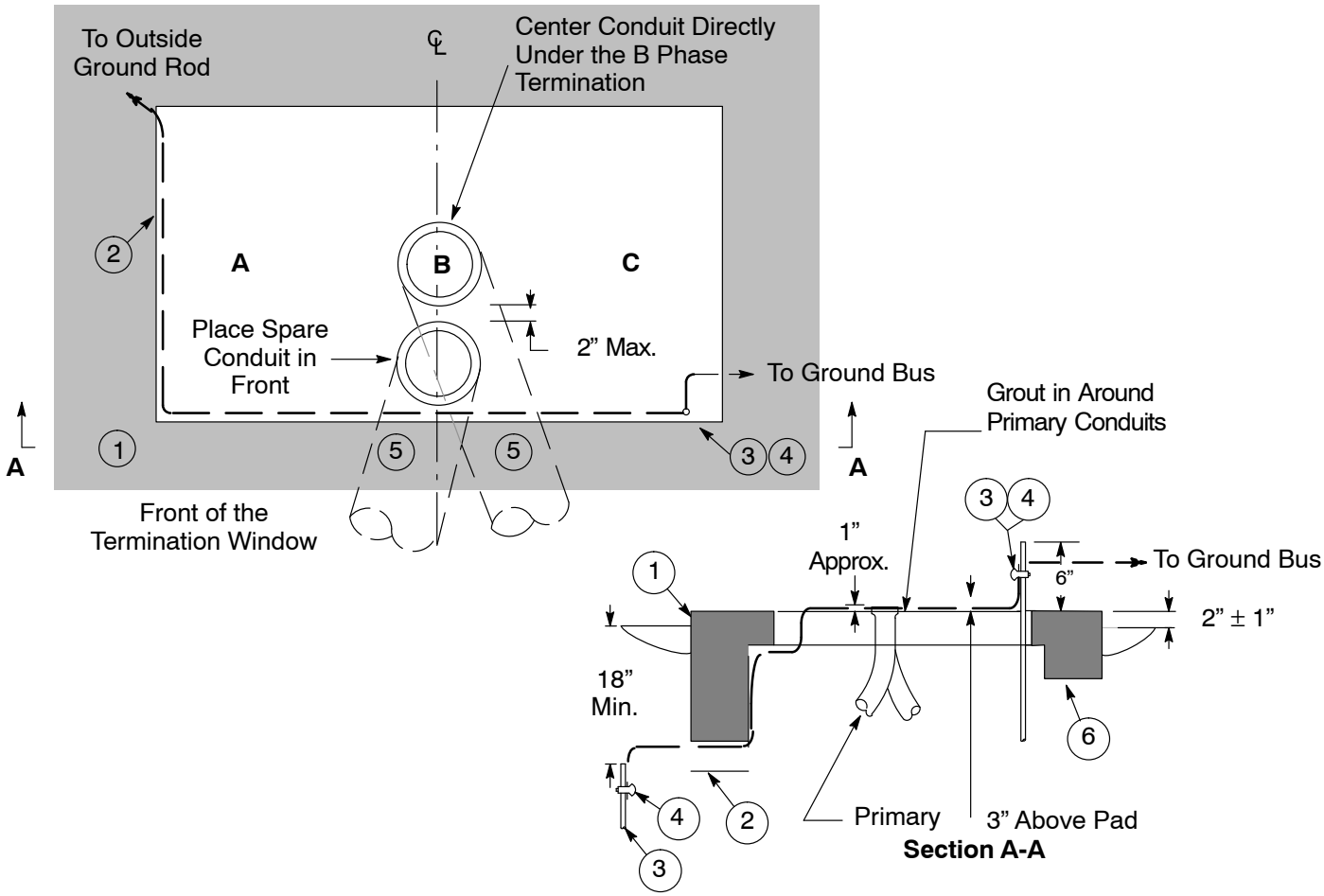

Figure 11-1
Primary Switchboard Termination Section Pad Detail

Notes in Reference to Figure 11-1.

1. Primary conduits must be centered in the window, as shown.
2. Maintain a 6-foot minimum separation between ground rods.
3. The ground wire must be a continuous wire that connects to and runs from the outside ground rod, under the pad, to the primary window. Then the wire must run above the pad, through the primary window, to the inside ground rod. Finally, the wire must run from the inside ground rod to the switchboard ground bus termination inside the termination section.

Table 11-1 Bill of Materials for Concrete Pad

Item	Quantity	Description	Code	Doc. No.
1	1	Pad, Concrete, Reinforced (size as required)	–	–
2	As required	Wire, #2 AWG, Solid, Soft Drawn, Bare Copper [1]	–	–
3	2	Ground Rod, 5/8" x 8', Copperclad	187013	013109
4	2	Clamp, Ground Rod, for Item 3	187012	
5	As required	Conduit, Type and Size (as required)	–	062288
6	As required	Compacted Backfill	–	–

[1] When the pad is installed for PG&E by others, it is acceptable to use either solid or stranded wire.

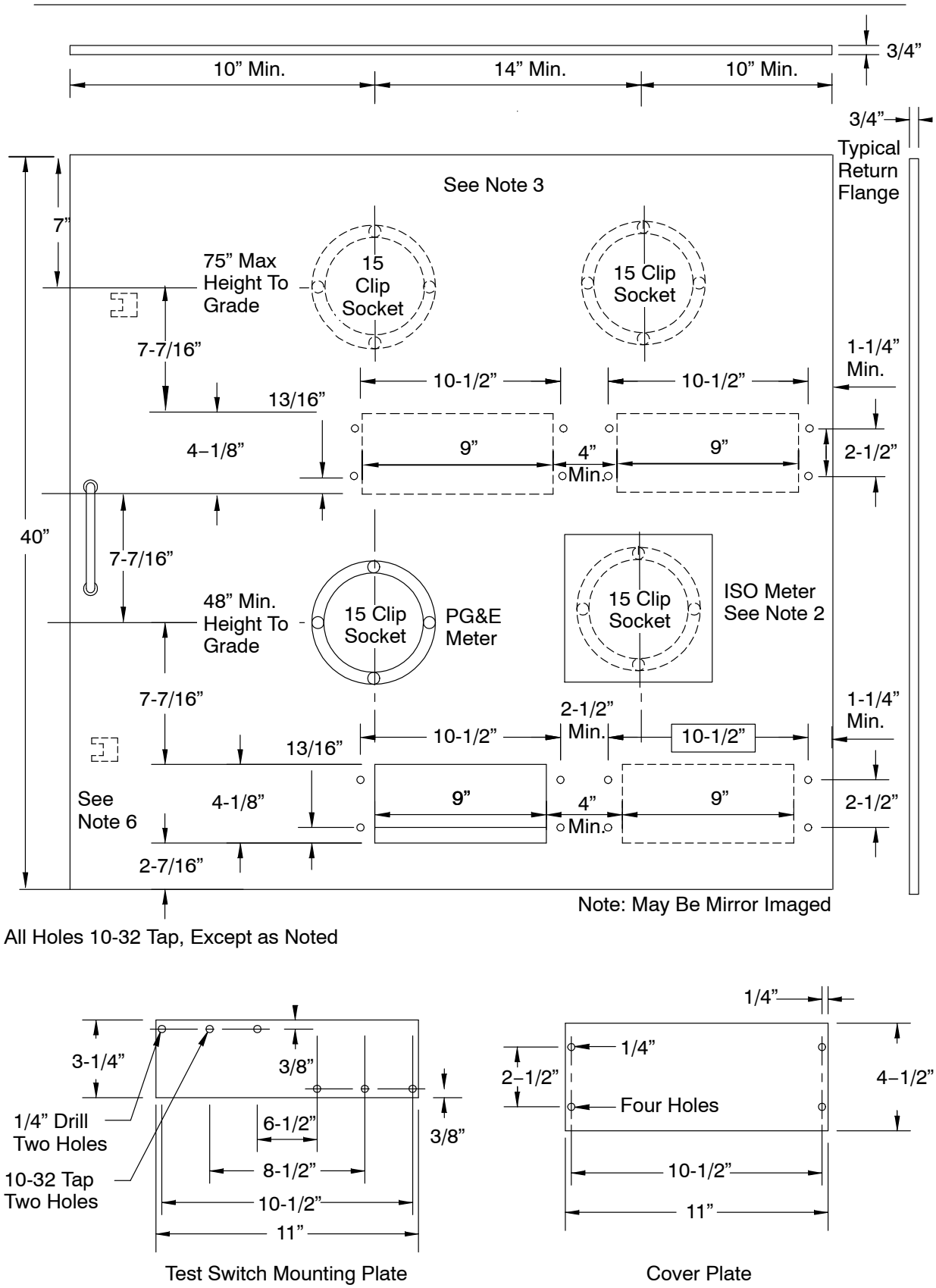

Figure 11-2
Hinged Meter Panel with Multiple Sockets for 2,400 to 27,000 Volt Service

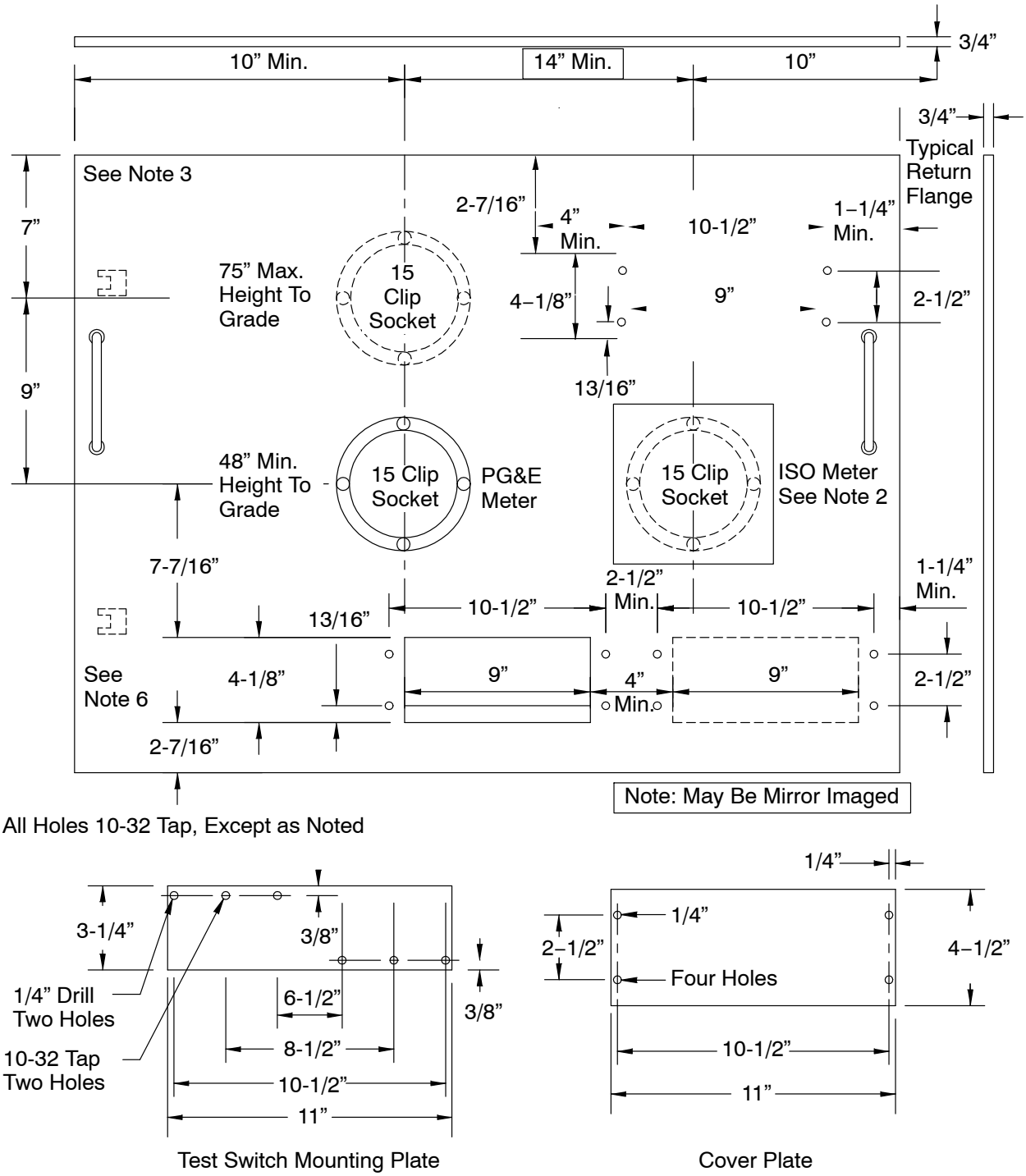

Figure 11-3
Hinged Meter Panel with Dual Socket for 2,400 to 27,000 Volt Service

Notes in reference to Figure 11-2 and Figure 11-3.

1. The panel must be constructed using 12 gauge (minimum) steel and furnished with meter sockets, sealing rings, slotted openings, and a removable plate for installing a secondary test switch. The slotted opening and removable plate edges must be smooth to prevent damaging the meter wiring.

Notes in reference to Figure 11-2 and Figure 11-3, continued.

2. Provide an ISO Meter Cast Ring Mounting Blank Cover. When a cast meter-mounting ring is provided, the screws used to attach to the meter panel must provide a minimum 1/8-inch clearance between the screw heads and the back of the ring.
3. Auxiliary power connections are not allowed.
4. The removable plates must be attached to the rear of the panel with screws that do not protrude through the face of the pane.
5. Meter sockets must be designed to connect from the back. A maximum of 4 meter sockets are allowed.
6. The panel must be equipped with hinges. The hinges must permit the panel to open to 90 degrees and be easily interchangeable, right or left, on the meter socket panel. Ensure that removable, pin-type hinges can be removed from the top. Hinges must be located on the same side as the PG&E meter socket.
7. When fully opened, the panel must support a 25-pound load applied at the unsupported end, with a maximum sag of 1/8 inch.
8. The panel must have a handle attached to both sides.
9. Stud and wing nuts must be sealable when used.
10. Consult PG&E before using a panel with a width of more than 38 inches.
11. Consult PG&E for meter-socket requirements.

Table 11-2 Dimensions for High-Voltage Meter Enclosures

Specifications	Switchboard Voltage Rating			
	2,400	4,160/4,800	7,200/17,000	20,800/25,000
	(In Inches)			
Minimum, Bare-Bus Clearance ∅ to Ground	3-1/2	3-1/2	6	Refer to the Dimensions in Figure 11-5 on Page 11-9 and Figure 11-6 on Page 11-10.
Minimum, Bare-Bus Clearance ∅ to ∅	5	5	7-1/2	
Dimension A	5 Min. 10 Max.	5 Min. 10 Max.	8 Min. 10 Max.	
Dimension B [1]	24 Min.	24 Min.	24 Min.	
Dimension C [1]	24 Min.	24 Min.	24 Min.	
Dimension D (Do not install neutral insulator)	–	–	–	
Dimension E [1]	36 Min.	48 Min.	60 Min.	
Dimension F	42 Min. 48 Max.	42 Min. 48 Max.	42 Min. 48 Max.	
Dimension G	36 Min.	36 Min.	36 Min.	
Dimension H Fuse-Mounting Clip: Center	8-1/2	8-1/2	11-1/2	
Dimension H Fuse Ferrule Diameter	1-5/8	1-5/8	1-5/8	
Dimension I To Bottom of Fuse Clip or Bus Extension (Whichever Is Lowest)	18	18	18	
Maximum Dimension J to Top of Fuse Clip or Bus Extension	30	30	30	

[1] Clearance to any part of the enclosure, including flanges and inner walls.

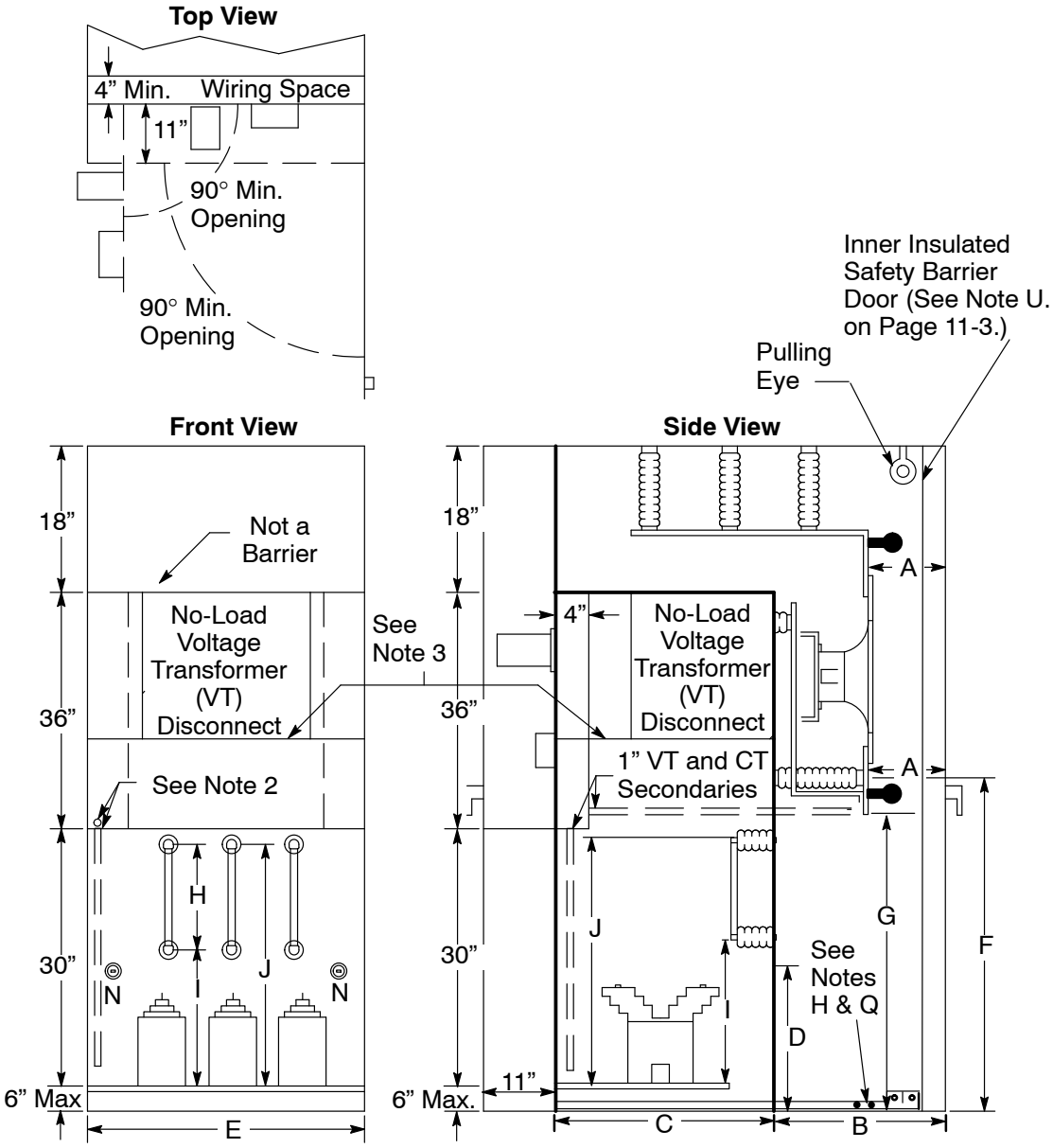

Figure 11-4
Typical, High-Voltage Metering Enclosure: 2,400-Volt Through 17,000-Volt Service

Notes in reference to Figure 11-4.

1. Install the meter’s panel hinge on the opposite side from the enclosing door hinge on a weatherproof unit. This allows the meter panel to be opened a full 90°.
2. Locate the 1-inch, non-metallic VT and CT secondary conduits on the same side as the meter’s panel hinges.
3. Electrically insulated barrier.
4. Applicants must ask the local project coordinator to contact the PG&E electric meter department to ensure that the types and models of instrument transformers they intend to install (i.e., VTs and CTs) are approved for use in high-voltage switchgear.
5. For VT Mounting rail materials and installation details, refer to the *EUSERC* manual, Drawing 407.
6. Ensure that the grounding bus extends on either the left or right sides of the CT compartment’s access area. Also, ensure that the grounding terminals are two aluminum-bodied mechanical lugs accepting a range of 6 American Wire Gauge (AWG) through 250 thousand circular mils (kcmil) conductors. Finally, ensure that they are identified with a label reading, “Safety Grounding Point For Utility Use Only.”

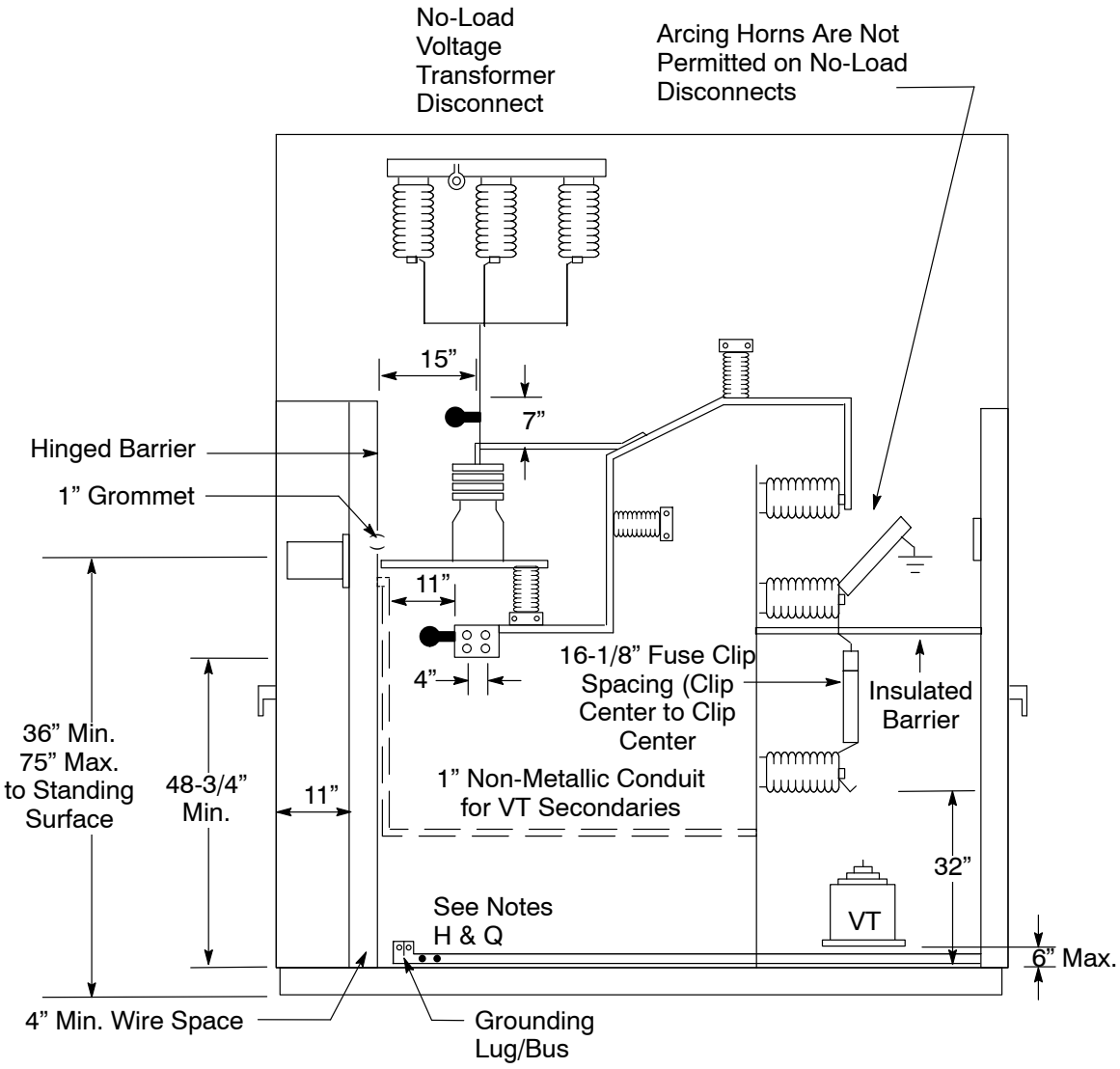

Side View

Figure 11-5
Typical, High-Voltage Metering Enclosure, 17,001-Volt Through 25,000-Volt Service

Notes in reference to Figure 11-5 above and Figure 11-6 on Page 11-10.

1. For rear access to the door, refer to the *EUSERC* manual, Drawing 400, Sheet 2, Note 7.
2. Connect the primary taps for VTs to the line-side of metering CTs.
3. When switchgear is mounted on rails, include a permanent platform, level with the bottom of the enclosure, in the switchgear installation to provide a clear and level working space in front of the metering compartment.
4. Ensure that the grounding bus extends on either the left or right side of the CT compartment’s access area. Also, ensure that the grounding terminals are 2 aluminum-bodied mechanical lugs accepting a range of 6 American Wire Gauge (AWG) through 250 thousand circular mils (kcmil) conductors. Finally, ensure that they are identified with a label reading “SAFETY GROUNDING POINT FOR UTILITY USE ONLY.”
5. Clearance to any part of the enclosure, including flanges and inner walls.
6. For VT Mounting rail materials and installation details refer to the *EUSERC* manual, Drawing 407.

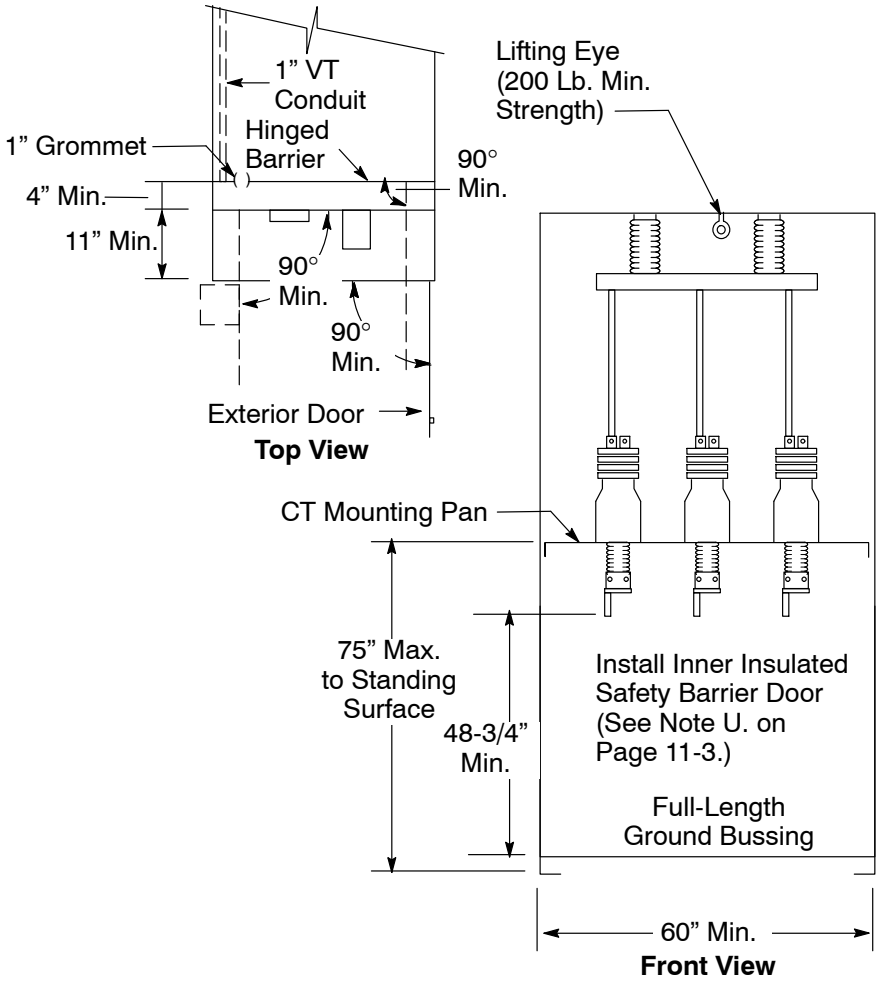

Figure 11-6
Typical, High-Voltage Metering Enclosure, 17,001-Volt Through 25,000-Volt Service

11.4. Interconnection Requirements and Primary Services

When new or existing applicants request services above 600 volts, refer to PG&E Bulletin TD-2999B-030, "Technical Requirements for Electric Service Interconnection at Primary Distribution Voltages," "Technical Requirements for Electric Service Interconnection at Primary Distribution Voltages," for technical information about primary services. This bulletin is located in Appendix B. If applicants intend to interconnect their generation facilities to PG&E's power system, they must refer to the *PG&E Distribution Interconnection Handbook* (http://www.pge.com/mybusiness/customerservice/nonpgeutility/generateownpower/distributedgeneration/interconnectionhandbook/index.shtml).

Appendix A
Acronyms & Glossary

Appendix A Acronyms & Glossary

Appendix A
Acronyms and Glossary

Acronyms

A	ampere, amps
ac	alternating current
AHJ	authority having jurisdiction
AIC	amperes interrupting capacity
ANSI	American National Standards Institute
AWG	American wire gauge
Btu	British thermal unit
CCR	Code of California Regulations
CDF	California Department of Forestry and Fire Protection
CGT	California Gas Transmission
℄	centerline
CPUC	California Public Utilities Commission
CT	current transformer
DA	direct access
DASMMD	*Direct Access Standards for Metering and Meter Data*
DASR	direct access service request
dc	direct current
DOT	U.S. Department of Transportation
EFV	excess flow valve
ESP	energy service provider
EUSERC	Electric Utilities Service Equipment Requirements Committee
G.O.	General Order
GRS	galvanized rigid steel
GT&D	Gas Transmission and Distribution
HDPE	high-density polyethylene
Hz	hertz
ID	inside diameter

Acronyms, continued

IMC	intermediate metal conduit
IPS	iron pipe size
k	kilo (1,000)
kcmil	thousand circular mils
K.O.	knock out
kVA	kilovolt ampere
MDMA	meter data management agent
MSP	meter service provider
NEC	National Electric Code
NEM	net energy metering
OH	overhead
OSHA	Occupational Safety and Health Administration
PCC	point of common coupling
psig	pounds per square inch gauge
PRC	California Public Resource Code
PT	potential transformer
PUE	public utility easement
PVC	polyvinyl chloride
scfh	standard cubic feet per hour
SRA	state responsibility areas
TBF	test-bypass facility
TVSS	transient voltage surge suppressor
UG	underground
UL	Underwriters Laboratories
U.S.	United States
USA	Underground Service Alert
V	volts
VT	voltage transformer
W	watt
WC	water column

Glossary

Applicant: This word is used generically throughout the manual to refer to the Pacific Gas and Electric Company (PG&E) customer, or to the person or persons representing the PG&E customer in the application/construction process, including a contractor, design consultant, or installer. The word "customer" will be used only when the word "applicant" is not appropriate. Also, PG&E will sometimes be referred to as the "Company" throughout this manual.

Attachment Structure: A support that connects the service drop to the structure while maintaining the clearances required for the service drop.

Back-Pressure Protection: A check valve between the downstream (i.e., after) section of the meter and the upstream section of the applicant's piping. This check valve prevents back-flow.

Barricade (Pedestrian Traffic): A suitable barricade to help ensure the safety of pedestrians is a heavy, wire-mesh fencing that is securely supported and is capable of protecting people from the hazards created by the moving parts of stationary machinery.

Barricade (Vehicular Traffic): A suitable barricade for vehicular traffic is concrete-filled steel pipes, 3 inches or greater in diameter, securely set in an adequate concrete pour for support. Also suitable for these conditions is a sleeve-mounted vehicle barricade where the sleeves are set in concrete.

Branch Service Pipe: A pipe that branches off from a gas service pipe to serve two or more applicants.

Conduit System: A system that includes conduits, conduit bends, conduit fittings, and all related components (e.g., bell ends and cable protectors) that are needed to install PG&E cables and conductors.

Cover: The standard distance between the outer surface of an underground facility and the final grade level.

Double Throw Switch: A switch that isolates the applicant's electrical system from that of the electrical corporation or state or local agency.

Drip Loop: A minimum 18 inches of service-entrance wiring that extends out from the service weatherhead.

Excess Flow Valve (EFV): A device installed in a gas service line at or near the main. An EFV is used to stop the flow of gas if the velocity of the gas passing through the valve creates a pressure difference across the valve that is greater than a specified design limit.

High-Voltage Power Lines: Generally, high-voltage power lines are any overhead lines that connect from pole to pole. These lines typically are 600 volts and greater.

LB: Short-radius conduit fitting. Also known as a service elbow.

Glossary, continued

Low-Growth Zone: Applicants must establish a 15-foot low-growth zone on both sides of all new, electric, high-voltage lines. The zone under the electric power lines should be a low-growth, tree-planting zone and/or a shrub- and flower-planting zone.

Main Service Disconnect: A fusible switch, circuit breaker, or other approved disconnect means for controlling all of (and **only**) the energy registered by that meter. When the governing code or ordinance permits, the disconnect means may consist of a group of fusible or circuit-breaker disconnects.

Mixed-Use Projects: Construction projects that include both commercial and residential loads.

Non-Utility Facilities: Subsurface facilities not owned by any person, corporation, partnership, business, trust, or public agency belonging to a regional, one-call notification system.

Point of Attachment: In areas served from overhead lines, PG&E will install an overhead service drop from the Company's distribution line to a point of attachment on the applicant's residence, building, or structure. The point of attachment may be either on the building wall near the PG&E line or on a periscope fixed to the building's roof, usually not more than 18 inches in back of that wall.

Positive Means: A device that, when used or operated, interrupts or prevents the flow of current to or from the electrical system. Also, a positive means provides the device operator or user with a visual or definite indication of the existing condition or state of the electrical system.

Residential: Class of customers commonly served at either 120/240 volts or 120/208 (network) with amperage ranging from 100 amperes to 320 amperes. Mobile homes installed on foundations also are classified as residential customers.

Secured In Place: The stud will not turn, back out, or loosen in any manner when subjected to normal, UL-approved torques while tightening or loosening terminal nuts. This includes cross-threaded situations.

Service Delivery Point (Gas Supply): The point where PG&E's facilities connect to the applicant's house pipe (i.e., houseline). For **residential** and **small commercial** meter sets, the service delivery point is the point where the male threads of the applicant's houseline connect to the female threads of PG&E's gas service tee fitting. Some **commercial** and **industrial** installations do **not** have service tees installed; therefore, the gas supply service delivery point is the first weld or fitting **after** the PG&E-installed bypass valve downstream of (i.e., after) the meter.

Service Elbow: Short-radius conduit fitting. Also known as an LB.

Glossary, continued

SmartMeter™ Advanced Meter Reading System: A meter using the latest radio frequency technology to transmit meter reads automatically from the gas and electric meters. This allows PG&E's applicants to monitor their daily usage information.

Standard Delivery Pressure: The gas service pressure provided to the service delivery point at 7 inches of water column (WC). This is approximately 1/4 pounds per square inch gauge (psig), as measured at the gas meter outlet.

Switchboard Service Section: The section of an applicant's switchboard provided specifically for terminating the service conductors and for housing the metering transformers (if required), revenue meters, test facilities, and service switch or breaker.

Tariff: A schedule of rates or charges of a business or a public utility.

Test Block: A test block is a specific type of test-bypass **device**. A test block is used for self-contained metering exclusively.

Test-Bypass Facility: Any mechanism used to bypass meter sockets. A test-bypass facility is used for self-contained metering exclusively.

Utility Point of Service (i.e., Service Point): The approved enclosure and the terminated or spliced connections.

Wet-Utility Piping or Facilities: Includes, but is not limited to, water, storm sewer, sanitary sewer, steam, liquid fuels, oil, diesel, sprinkler, irrigation, spigots, downspouts, drain or leach lines, propane, or lines for other liquids or volatile, heavier-than-air gases.

Working Space: An area in front of the meter, the meter enclosure, and the service-conductor termination and pulling facilities. A working space permits access to the equipment and provides a safe working environment for personnel.

This Page Intentionally Left Blank

Appendix B
Electric and Gas Service Documents

Appendix B Electric and Gas Service Documents

Appendix B
Electric and Gas Service Documents

Appendix B contains the following documents.

- Tree Planting Matrix Tables
- TD-7001B-002, “PG&E Standards and Requirements for Plug-In Electric Vehicle Interconnections”
- TD-7001B-005, “SmartMeter™ Electric Network Requirements for Indoor Meter Rooms and High-Rise Building Construction”
- TD-6999B-005, “VNEM Installation Requirements”
- TD-6999B-048, “Requirements for Line Side Tap Interconnections for Distributed Generation”
- Street Light Conduit Detail
- Flame Resistant (FR) Requirement Letter
- TD-5453B-002, “Updated Separation Requirements For Conduit in Joint Trench
- *Joint Trench Configurations and Occupancy Guide*
- Engineering Material Specification 4123, “Backfill Sand”
- TD-2999B-030, “Technical Requirements for Electric Service Interconnection at Primary Distribution Voltages”

Applicants should access Pacific Gas and Electric Company’s (PG&E’s) Internet website at www.pge.com/greenbook to find the latest versions of, and updates to, these documents. Also, applicants may contact their local PG&E service planning office to ensure their documents are current.

NOTE: See Table FM-1, “Service Planning Office Contact Information,” at the front of this manual starting on Page iv, for specific contact numbers listed by area.

Tree Planting Matrix Tables

Table B-1 through Table B-6 list trees that are suitable for planting near or under power lines. The trees are listed by genus and species in each table. The list is limited and does not include all suitable trees; however, applicants can use this information as a **guideline** for choosing an appropriate tree for planting near power lines. The basic rule of thumb is to choose plants that grow to be 25 feet or less at maturity. For additional suggestions about appropriate trees, consult with nurseries, certified arborists, gardening books, and websites like SelecTree at http://ecologycenter.org/directory/directory−entries/selectree/ (maintained by the Urban Forest Ecosystems Institute at Cal Poly State University).

PG&E urges applicants to consider planting shrubs, grasses, and flowers near and under power lines. By selecting low-growing vegetation, applicants ensure that trimming back intrusive growth will not be an issue.

Table B-1 Plant Matrix for Stockton, Yosemite, Fresno, and Kern Divisions [1]

Botanical Name Genus and Species	Common Name	Evergreen vs. Deciduous	Height and Spread (in feet)	Drought Tolerant	Special Considerations	Climate Zones [2]
Acer buergeranum	Trident Maple	D	25 s	No	Low spreading growth, red to yellow fall color.	4-9, 14-16, 20, 21
Acer palmatum	Japanese Maple	D	25 h	No	Green leaf varieties tolerate sun best, fire resistance favorable.	1-9, 14-24
Cercis canadensis	Eastern Redbud	D	25-40 h [3]	No	Small rosy pink flowers in early spring, is easily killed by over-watering.	1-3, 7-20
Cotinus coggygria 'prupurea'	Smoke Tree	D	25 h	—	Branches droop but resist breakage, full sun, dramatic puffs of purple to lavender from fading flowers.	1-24
Crataegus laevigata	English Hawthorn	D	25 h 15 s	—	Thorny branches, need pruning to thin out excess twiggy growth, bright rose to red flowers.	1-11, 14-17
Koelreuteria paniculata 'Kew' or 'Fastigiata'	Golden Rain Tree	D	25 h	No	Branches susceptible to breakage, soil should be well drained, prune to shape.	2-21
Lagerstroemia x faueri cultivars with Indian names	Crape Myrtle*(cultivar mentioned w/ Indian names are resistant to powdery mildew)*	D	25 h 25 s	Yes	Attracts birds, plant in full sun, various flower colors available, white, red, pink, purple.	7-9, 12-14, 18-21
Laurus saratoga	Saratoga Laurel	E	25 h	—	Compact erect tree, takes pruning well, needs good drainage.	5-9, 12-24
Pittosporum tobira	Tobira	E	15 h	Yes	Small tree. Rarely grows to 30 feet, favorable fire resistance, takes pruning well, full sun or partial shade, clusters of creamy white flowers in spring.	8-24
Prunus cerasifera 'krauter vesuvious' 'thundercloud' and 'newport'	Flowering Plum	E	18 h 12 s	—	Profuse fragrant pink flowers early spring, leaves purple/black, no or little fruit, *several cultivars to choose from.*	2-22
Syringa reticulata	Japanese Tree Lilac	D	30 h [3]	—	Large shrub easily trained as single-stemmed tree, useful as small shade and street tree, showy white flowers in spring.	1-12, 14-16

1 Plant Matrix for Stockton Division (Amador, Calaveras, San Joaquin, Alpine) (Zones 7, 8, 9, 14), Yosemite Division (Stanislaus, Merced, Tuolumne, Mariposa, Madera) (Zones 1, 7, 8, 9), Fresno Division (Fresno, Kings) (Zones 1, 7, 8, 9) and Kern Division (Kern)(Zones 1, 2, 7, 8, 9).

2 Refer to the climate zone map in *Sunset Western Garden Book* for the climate zone in your area.

3 Trees referenced as growing to 30 feet (or more) at maturity generally do not reach their maximum height except under optimum growing conditions.

Table B-2 Plant Matrix for San Francisco, Peninsula, and DeAnza Divisions [1]

Botanical Name Genus and Species	Common Name	Evergreen vs. Deciduous	Height and Spread (in feet)	Drought Tolerant	Special Considerations	Climate Zones [2]
Acer griseum	Paperbark Maple	D	25 h	No	Late to leaf out in spring, narrow rounded crown, brilliant red fall color.	1-9, 14-21
Arbutus unedo	Strawberry Tree	E	35 h [3]	—	Rarely exceeds 15-20 feet in coastal areas, fire resistance favorable, hanging pink/red flowers, fruit looks similar to strawberries.	4-24
Cercis occidentalis	Western Redbud	D	25 h	Yes	California native, attractive changing flower and foliage color, is easily killed by over-watering.	2-24
Crateagus lavallei	Carreiere Hawthorn	D	25 h 15-20 s	—	Dark green leaves, turn bronze red after sharp frost, white flowers in spring, red and orange fruit can be messy on walkways.	1-11, 14-17
Eriobotrya deflexa 'coppertone'	Bronze Loquat	E	25 h 25 s	No	Shrubby, easily trained to a tree, new growth is copper for long time before turning green.	8-24
Garrya elliptica	Coast Silktassel	E	25 h	Yes	California native, fire resistance favorable graceful yellowish/green catkins 3-inches to 8-inches long on males.	5-9, 14-21
Koelreuteria paniculata 'Kew' or 'Fastigiata'	Golden Rain Tree	D	25 h	No	Branches susceptible to breakage, soil should be well drained, prune to shape.	2-21
Leptospermum laevigatum	Australian Tea Tree	E	30 h [3] 30 s	Yes	Grows best near the coast, flowers in spring, needs full sun, it is quite frost sensitive.	14-24
Rhus lancea	African Sumac	E	25 h 20 s	Yes	Slow growing, takes high summer heat. Can be multi-stemmed or trained to one stem tree. Good screen.	8, 9, 12-24
Prunus cerasifera 'krauter vesuvious' 'thundercloud' and 'newport'	Flowering Plum	E	18 h 12 s	—	Profuse fragrant pink flowers early spring, leaves purple/black, no or little fruit, *several cultivars to choose from.*	2-22
Prunus serrulata 'Kwanzan'	Flowering Cherry	D	25 h	—	Spectacular spring flowers, needs moist protected site, good soil drainage and full sun.	2-7, 14-20

1 Plant Matrix for San Francisco Division (San Francisco) (Zone 17), Peninsula Division (San Mateo) (Zones 14, 15, 16, 17) and De Anza Division (Santa Clara) (Zones 15, 16, 17).

2 Refer to the climate zone map in *Sunset Western Garden Book* for the climate zone in your area.

3 Trees referenced as growing to 30 feet (or more) at maturity generally do not reach their maximum height except under optimum growing conditions.

Table B-3 Plant Matrix for San Jose, Central Coast, and Los Padres Divisions [1]

Botanical Name Genus and Species	Common Name	Evergreen vs. Deciduous	Height and Spread (in feet)	Drought Tolerant	Special Considerations	Climate Zones [2]
Acer griseum	Paperbark Maple	D	25 h	No	Late to leaf out in spring, narrow rounded crown, brilliant red fall color.	1-9, 14-21
Crateagus phaenopyrum	Washington Thorn	D	25 h 20 s	—	Orange red fall foliage, shiny red fruit, light open limb structure, least susceptible to fireblight.	1-11, 14-17
Eriobotrya deflexa 'coppertone'	Bronze Loquat	E	25 h	No	Shrubby, easily trained to a tree, new growth is copper for long time before turning green.	8-24
Laurus saratoga	Saratoga Laurel	E	25 h	—	Compact erect tree, takes pruning well, needs good drainage.	5-9, 12-24
Ligustrum ovalifolium	California Privet	semi-deciduous	15 h	—	Inexpensive hedge plant, takes pruning well.	4-24
Malus floribunda 'adams' , 'robinson'	Crabapple	D	25 h 30 s	—	Attracts birds and bees, good disease resistance, *several cultivars to choose from.*	1-11, 14-21
Myoporum insulare	Myoporum	E	30 h [3] 20 s	—	Fire resistant, takes full sun, it is quite frost sensitive.	8, 9, 15-17, 19-24
Myrica californica	Pacific Wax-myrtle	E	25 h	Yes	California native, fire resistance favorable.	4, 5, 6, 14-17, 20-24
Olea europaea 'Swan Hill'	Fruitless Olive	E	30 h [3] 25 s	—	Does well in areas with hot dry summers, full sun, withstands heavy pruning.	8, 9, 11-24
Pittosporum tobira	Tobira	E	25 h	Yes	Small tree. Rarely grows to 30 feet, favorable fire resistance, takes pruning well, full sun or partial shade, clusters of creamy white flowers in spring.	8-17, 19-24
Prunus cerasifera 'krauter vesuvious' 'thundercloud' and 'newport'	Flowering Plum	E	18 h 12 s	—	Profuse fragrant pink flowers early spring, leaves purple/black, no or little fruit, *several cultivars to choose from.*	2-22
Tristania laurina 'Elegans'	Elegant Brisbane Box	E	25 h	No	Can be trained to be a single or multi-stemmed trunk, excellent for screen and boundary planting.	15-18, 19-24

1 Plant Matrix for San Jose Division (Santa Clara) (Zones 15, 16, 17), Central Cost Division (Santa Cruz, San Benito, Monterey) (Zones 7, 14, 15, 16, 17) and Los Padres Division (San Luis Obispo, Santa Barbara) (Zones 2, 3, 7, 14, 15, 16, 17, 18, 23, 24).

2 Refer to the climate zone map in *Sunset Western Garden Book* for the climate zone in your area.

3 Trees referenced as growing to 30 feet (or more) at maturity generally do not reach their maximum height except under optimum growing conditions.

Table B-4 Plant Matrix for North Valley, Sierra, and Sacramento Divisions [1]

Botanical Name Genus and Species	Common Name	Evergreen vs. Deciduous	Height and Spread (in feet)	Drought Tolerant	Special Considerations	Climate Zones [2]
Acer ginnala	Amur Maple	D	25 h	No	Multi-trunk large shrub or trained at nursery as one stem tree, striking red fall color.	1-9, 14-16
Acer palmatum	Japanese Maple	D	25 h	No	Green leaf varieties tolerate sun best, fire resistance favorable.	1-9, 14-24
Cercocarpus ledifolius	Curly Leaf Mountain Mahogany	E	20 h	Yes	Native to dry mountain slopes, attractive open branching pattern, OK in full sun.	1-3, 7-14, 18, 19
Cornus kousa	Kousa Dogwood	D	25 h	No	Needs ample water, big multi-stem shrub can be trained to a tree, white flowers.	3-9, 14, 15, 18, 19
Crateagus phaenopyrum	Washington Thorn	D	25 h 20 s	—	Orange red fall foliage, shiny red fruit, light open limb structure, least susceptible to fireblight.	1-11, 14-17
Garrya elliptica	Coast Silktassel	E	25 h	Yes	California native, fire resistance favorable, graceful yellowish/green catkins 3-inches to 8-inches long on males.	5-9, 14-21
Lagerstroemia x faueri cultivars with Indian names	Crape Myrtle *(cultivar mentioned w/ Indian names are resistant to powdery mildew)*	D	25 h 25 s	Yes	Attracts birds, plant in full sun, various flower colors available, white, red, pink, purple.	7-9, 12-14, 18-21
Laurus saratoga	Saratoga Laurel	E	25 h	—	Compact erect tree, takes pruning well, needs good drainage.	5-9, 12-24
Sorbus aucuparia	European Mountain Ash	E	30 h [3] 20 s	—	Stands winter cold, strong winds, low humidity and extreme heat, attractive to birds, bright fruit, clustered white flowers.	1-10, 14-17
Styrax japonica	Japanese Snowdrop Tree, Japanese Snowbell	D	30 h [3]	No	Needs well drained soil, full sun or part shade, plenty of water. Prune to control shape, tends to be shrubby if lower branches left.	3-10, 14-21
Syringa reticulata	Japanese Tree Lilac	D	30 h [3]	—	Large shrub easily trained as single-stemmed tree, useful as small shade and street tree, white showy flowers in spring.	1-12, 14-16

1 Plant Matrix for North Valley Division (Shasta, Tehama, Glenn, Butte) (Zones 1, 7, 8 ,9), Sierra Division (Sutter, Yuba, Nevada, Sierra, Placer, El Dorado) (Zones 1, 7, 8, 9) and Sacramento Division (Yolo, Colusa, Solano) (Zones 7, 8, 9, 14).

2 Refer to the climate zone map in *Sunset Western Garden Book* for the climate zone in your area.

3 Trees referenced as growing to 30 feet (or more) at maturity generally do not reach their maximum height except under optimum growing conditions.

Table B-5 Plant Matrix for Diablo, Mission, and East Bay Divisions [1]

Botanical Name Genus and Species	Common Name	Evergreen vs. Deciduous	Height and Spread (in feet)	Drought Tolerant	Special Considerations	Climate Zones [2]
Aesculus californica	California Buckeye	D	25 h needs room, very wide spreading	Yes	California native, grows best in cool, coastal foothills.	4-7, 14-19
Acer truncatum	"Truncatum" Maple	D	20 h	No	Adaptable tree, leaves are purplish red, summer green, dark purple in autumn.	1-9, 14-23
Cercis canadensis	Eastern Redbud	D	25-35 h [3]	No	Small rosy pink flowers in early spring, is easily killed by over-watering.	1-3, 7-20
Crateagus phaenopyrum	Washington Thorn	D	25 h 20 s	—	Orange red fall foliage, shiny red fruit, light open limb structure, least susceptible to fireblight.	1-11, 14-17
Laurus saratoga	Saratoga Laurel	E	25 h	—	Compact erect tree, takes pruning well, needs good drainage.	5-9, 12-24
Ligustrum ovalifolium	California Privet	semi-deciduous	15 h	—	Inexpensive hedge plant, takes pruning well.	4-24
Magnolia stellata	Star Magnolia	D	10 h 20 s	No	Profuse bloom in late winter, early spring.	1-9, 14-24
Malus floribunda 'adams' , 'robinson'	Crabapple	D	25 h 30 s	—	Attracts birds and bees, good disease resistance, *several cultivars to choose from.*	1-11, 14-21
Prunus cerasifera 'krauter vesuvious' 'thundercloud' and 'newport'	Flowering Plum	E	18 h 12 s	—	Profuse fragrant pink flowers early spring, leaves purple/black, no or little fruit, *several cultivars to choose from.*	2-22
Prunus serrulata 'Kwanzan'	Flowering Cherry	D	25 h	—	Spectacular spring flowers, needs moist protected site, good soil drainage and full sun.	2-7, 14-20
Styrax japonica	Japanese Snowdrop Tree, Japanese Snowbell	D	30 h [3]	No	Needs well-drained soil, full sun or part shade, plenty of water, prune to control shape, tends to be shrubby if lower branches left.	3-10, 14-21

1 Plant Matrix for Diablo Division (Alameda, Contra Costa) (Zones 15, 16, 17), Mission Division (Alameda) (Zones, 7, 14, 15) and East Bay Division (Contra Costa) (Zones 7, 14, 15, 16, 17).

2 Refer to the climate zone map in *Sunset Western Garden Book* for the climate zone in your area.

3 Trees referenced as growing to 30 feet (or more) at maturity generally do not reach their maximum height except under optimum growing conditions.

Table B-6 Plant Matrix for North Coast and North Bay Divisions [1]

Botanical Name Genus and Species	Common Name	Evergreen vs. Deciduous	Height and Spread (in feet)	Drought Tolerant	Special Considerations	Climate Zones [2]
Acer truncatum	"Truncatum" Maple	D	20 h	No	Adaptable tree, leaves are purplish red, summer green, dark purple in autumn.	1-9, 14-23
Aesculus californica	California Buckeye	D	25 h needs room, very wide spreading	Yes	California native, grows best in cool, coastal foothills.	4-7, 14-19
Amelanchier alnifolia	Mountain Serviceberry	D	20 h	—	Suited to mountainous parts of the west, attractive foliage changes color.	1-6, 15, 16, 17
Callistemon citrinus	Lemon Bottlebrush	E	25 h	Yes	Favorable fire resistance, attracts hummingbirds, shrub easily trained to a tree, it is quite frost sensitive.	8, 9, 12-24
Cercis occidentalis	Western Redbud	D	25 h	Yes	California native, attractive changing flower and foliage color, is easily killed by over watering.	2-24
Cotinus coggygria 'prupurea	Smoke Tree	D	25 h	—	Branches droop but resist breakage, full sun, dramatic puffs of purple to lavender from fading flowers.	1-24
Crataegus laevigata	English Hawthorn	D	25 h 15 s	—	Thorny branches, need pruning to thin out excess twiggy growth, bright rose to red flowers.	1-11, 14-17
Eriobotrya deflexa 'coppertone'	Bronze Loquat	E	25 h	No	Shrubby, easily trained to a tree, new growth is copper for long time before turning green.	8-24
Leptospermum laevigatum	Australian Tea Tree	E	30 h [3] 30 s	Yes	Grows best near the coast, flowers in spring, needs full sun, it is quite frost sensitive.	14-24
Myoporum insulare	Myoporum	E	30 h [3] 20 s	—	Fire resistant, takes full sun, tough, fast growing, it is quite frost sensitive.	8, 9, 15-17, 19-24
Styrax japonica	Japanese Snowdrop Tree, Japanese Snowbell	D	30 h [3]	No	Needs well-drained soil, full sun or part shade, plenty of water, prune to control shape, tends to be shrubby if lower branches left.	3-10, 14-21

1 Plant Matrix for North Coast (counties Humboldt, Mendocino, Lake, Sonoma) (Zones 1, 2, 14, 15, 17) and North Bay Division (counties Napa, Marin) (Zones 7, 14, 15, 16, 17).
2 Refer to the climate zone map in *Sunset Western Garden Book* for the climate zone in your area.
3 Trees referenced as growing to 30 feet (or more) at maturity generally do not reach their maximum height except under optimum growing conditions.

PG&E-Prohibited Trees

Applicants must **not** plant the trees listed in Table B-7, "Do Not Plant These Trees Under or Within 15 Feet of Overhead Power Lines," under or within 15 feet of overhead power lines. When mature, these trees affect PG&E's ability to provide and maintain safe and reliable service. Many species of trees are **not** appropriate for confined spaces under electric lines, although they may be appropriate for other locations within a development or building site. The list is limited and does not include all varieties of unsuitable trees; however, applicants can use this information as a **guideline** when choosing an appropriate tree for planting near power lines. Applicants should plant trees that grow higher than 25 feet at maturity **at least 15 feet to the side of overhead power lines**.

Under the botanical names of the trees, occasionally only the genus is listed. Applicants should not plant **any** types of trees within these genera under or within 15 feet of overhead power lines.

Table B-7 Do Not Plant These Trees Under or Within 15 Feet of Overhead Power Lines

Botanical Name *(Genus and species)*	Common Name	Evergreen vs Deciduous	Height and Spread (in feet)	Special Considerations	Climate Zones [1]
Acacia baileyana	Bailey Acacia	—	30 h	Most commonly planted. Fast growing, short lived.	7-9, 13-24
Acacia mellanoxylon	Blackwood Acacia	—	40 h 20 s	Fast dense upright growth. Roots aggressive, lifts sidewalks, splits easily and suckers (grows from the roots).	8, 9, 13-24
Acer macrophyllum	Bigleaf Maple	D	30-95 h	Native to California foothills, too big for small gardens and streets.	4-17
Acer negundo	Box Elder	D	60 h	Fast growing, seeds readily, subject to breakage.	1-10, 12-24
Acer rubrum	Red Maple	D	40+ h 20+ s	Fast growing, red twigs, branchlets and buds.	1-9, 14-17
Acer saccharinum	Silver Maple	D	40-100 h equal spread	Fast growth, weak wood.	1-9, 12, 14-24
Ailanthus altissima	Tree of Heaven	D	50 h	Fast growing, suckers and self seeds.	All zones
Alnus spp.	Alder Trees	D	40-90 h	Relatively fast growing, invasive roots, several native California species.	Various
Eucalyptus	Eucalyptus	E	30-200 h	Fast growing, invasive roots, many species.	8-24
Fraxinus	Ash Trees	D	35-80 h	Relatively fast growing.	
Carya illinoensis	Pecan Trees	D	70 h 70 s	Long tap root and leathery mature leaves.	8-9, 12-14, 18-20
Catalpa spp.	Catalpa	D	up to 70 h	Some litter from fallen flowers in summer and seed capsules in fall. Seldom develops dominate shoot without shaping.	All zones
Juglans spp.	Walnut Trees	D	30-100 h spreading	Various species, check *Sunset Western Garden Book*, English and Black Walnut notorious for hosting aphids, honeydew is inevitable.	Various
Liriodendron tulipifera	Tulip Tree	D	up to 80 h 40 s	Fast growing, straight columnar trunk. Spreading root system makes it hard to garden under.	1-12, 14-23
Liquidambar styraciflua	Sweetgum, Liquidambar	D	60 h 25 s	Moderate growth rate, upright, somewhat cone shaped, fruits are spiny balls that need raking in fall. Roots can be a nuisance in lawns or parking strips.	1-12, 14-24
Metasequoia glyptostroboides	Dawn Redwood	D	up to 90 h	Salt winds and hot sunlight cause foliage burn.	3-9, 14-24
Phoenix Caneriensis	Canary Island Date Palm	Palm/E	60 h 50 s	Grows slowly until it forms trunk, then speeds up a little. Slow to develop new head after hard frost.	9, 12- 24

[1] Refer to the climate zone map in *Sunset Western Garden Book* for the climate zone in your area.

Table B-7 Do Not Plant These Trees Under or Within 15 Feet of Overhead Power Lines, continued

Botanical Name (*Genus and species*)	Common Name	Evergreen vs. Deciduous	Height and Spread (in feet)	Special Considerations	Climate Zones [1]
Pinus spp.	Pine Trees	D	30-100 h wide spreading	Some faster growing than other species. Many varieties.	various
Platanus acerifolia.	London Plane, Sycamore	D	40-80 h 30-40 s	Fast growing. Subject to anthracnose (causing early continuous leaf fall)	2-24
Populus nigra italica	Lombardy Poplar	D	40-100 h	Fast growing, invasive roots systems, suckers profusely.	All Zones
Populus trichocarpa	Black Cottonwood	D	150-180 h wide spreading	Heavy limbed, wood is very brittle. Native along mountain streams and wet lowlands west of cascades, California to Alaska.	1-7
Pseudotsuga Menziesii	Douglas Fir	E	70-250 h	Can't be maintained at a reduced height without butchering the tree. Native to Northwest America as far south as Fresno County.	1-10, 14-17
Quercus lobata	Valley Oak	D	70 h up to 70 s	Native to California. Limbs often twisted, long drooping outer branches can sweep ground.	1-3,6-16, 18-21
Quercus spp.	Oak Trees	D	up to 80 h 70 s	Various species, check Sunset Western Garden Book.	Various
Robinia pseudoacacia	Black Locust	D	75 h	Fast growth. Wood is brittle, roots aggressive, plants of spread by suckers.	All zones
Salix babylonica	Weeping Willow	D	50 h 50 s	Fast growing. Invasive root systems and are difficult to garden under.	All zones
Sequoia sempervirens	Coast Redwood	E	90 h 30 s	Tallest of the worlds trees! Optimum conditions to 350f. Fast growing. Can defeat lawns.	4-9, 14-24
Ulmus spp.	Elm Trees	D	100 h 70 s	Various species, check *Sunset Western Garden Book*. Root systems are aggressive. Branch crotches often narrow, easily split, Attracts leaf beetles, bark beetles, leafhoppers, aphids and scale. Care can be messy.	Various
Washingtonia filifera	California Fan Palm	Palm/ E	60 h	Fast growing, native to California.	8,9,11-24
Washingtonia robusta	Mexican Fan Palm	Palm/E	100 h	Very fast growing.	8,9,11-24
Zelkova serrata	Sawleaf Zelkova	D	60+ h 60 s	Moderate to fast growth.	3-21

[1] Refer to the climate zone map in *Sunset Western Garden Book* for the climate zone in your area.

This Page Intentionally Left Blank

PG&E Standards and Requirements for Plug-In Electric Vehicle Interconnections

Summary

This bulletin describes the requirements for the various metering and connection options to serve Plug-in Electric Vehicles (PEV) and Electric Vehicle Supply Equipment (EVSE). These requirements apply only to residential customers. Please refer to the 2010 *Electric and Gas Service Requirements (Greenbook)* for additional service and metering information.

Affected Document

2010 *Greenbook*.

Target Audience

PG&E residential customers connecting Plug-In Electric Vehicles. PG&E employees who perform customer contact or electric meter field work.

What you need to know

Plug-In Electric Vehicle (PEV) Interconnection

PG&E Standards and Requirements

General Requirements:

Basic illustrations are provided to show the options that an existing PG&E residential customer has to connect and meter plug-in Electric Vehicle Supply Equipment (EVSE). Local or state officials may stipulate additional provisions for installation of the EVSE system. All customer electric service and meter installations must be reviewed and approved by Pacific Gas and Electric Company. For questions regarding PG&E's PEV requirements, please contact the New Construction Service Center (NCSC) at 877-743-7782.

©2011 Pacific Gas and Electric Company. All rights reserved.

PG&E Standards and Requirements for Plug-In Electric Vehicle Interconnections

Specific Requirements:

1. Customers must notify PG&E of the additional electrical load before connecting a PEV. The increased load may require the electric service cables, conduit, and meter panel to be upgraded. See note (1) below.
2. All installations must be approved by PG&E and the local (city/county) inspection agency or the authority having jurisdiction.
3. The E-9A Time-of-Use (TOU) rate is optional for residential PEV customers who elect to remain with a single meter. See note (2) below.
4. The E-9B TOU rate is mandatory for residential PEV customers who elect to meter their PEV usage separately. See note (2) below.
5. This bulletin does not apply to commercial, industrial, and agricultural customers. They are served under existing PG&E rates and rules.
6. E-9B Rate signage for multi-meter panel: PG&E will permanently attach signage to the front of the panel and next to the dedicated electric vehicle meter stating, “Dedicated to PEV charging equipment only; other loads must not be connected.
7. E-9B Rate signage for two meters, one on each panel: PG&E will permanently attach signage to the front of each meter panel as follows:
   a. On the main panel stating, “Caution: This premise has a second meter for PEV charging equipment.”
   b. On the second panel stating, “Dedicated to PEV charging equipment only; other loads must not be connected.
8. Dual meter socket adapters are not approved for use.
9. A customer owned generation system (e.g. solar, wind) is allowed to be connected to the E-9B meter panel. The energy generated cannot serve both (E-9B and house) meters. Customers that want to supply generation energy to both meters will need to add a separate generation system and request a second Net Energy Metering (NEM) account. See note (5) below.

Note:

(1) Refer to PG&E’s Electric Rule 16 for service upgrade information.

(2) Refer to PG&E’s Electric Rate Schedules for current information.

(3) Refer to the 2010 *Electric and Gas Service Requirements (Greenbook)* for additional information.

(4) Information for new business customers is on the New Construction Service Center (NCSC) website.

(5) PG&E’s Generation Interconnection Services (GIS) may be reached at gen@pge.com or leave a message on their hotline: 415-972-5676.

©2011 Pacific Gas and Electric Company. All rights reserved.

PG&E Standards and Requirements for Plug-In Electric Vehicle Interconnections

Residential: E-9A Time Of Use (TOU) rate - Optional
Single-Meter Panel option for House and Electric Vehicle Load.

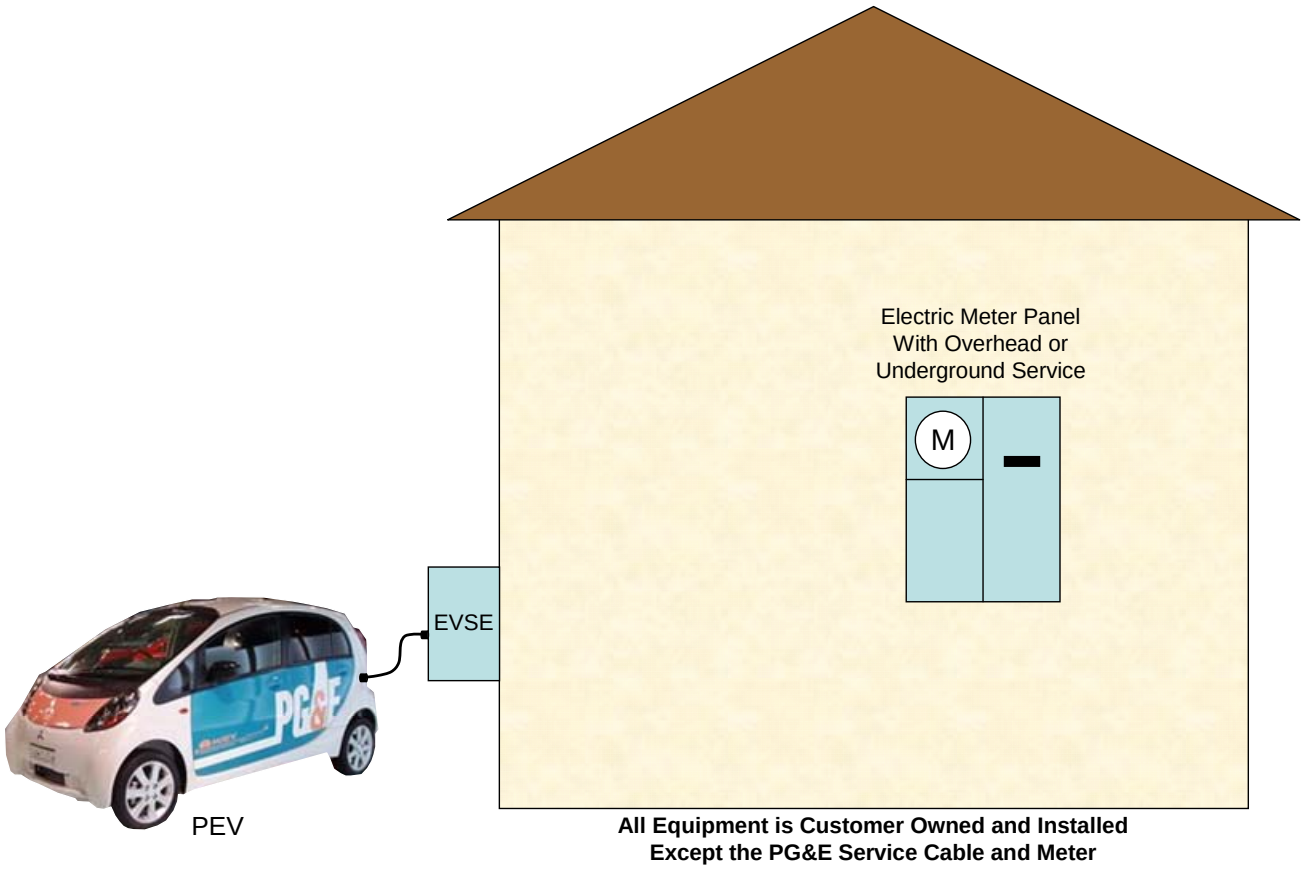

Pros:

- No second meter panel installation
- Low off peak TOU rate

Cons:

- Easier to exceed lower tiered baselines
- Panel upgrade may be required due to added EV load
- High peak TOU rate

©2011 Pacific Gas and Electric Company. All rights reserved.

PG&E Standards and Requirements for Plug-In Electric Vehicle Interconnections

Residential: E-9B Time Of Use (TOU) rate
Multi-Meter Panel option for House and Electric Vehicle Load.

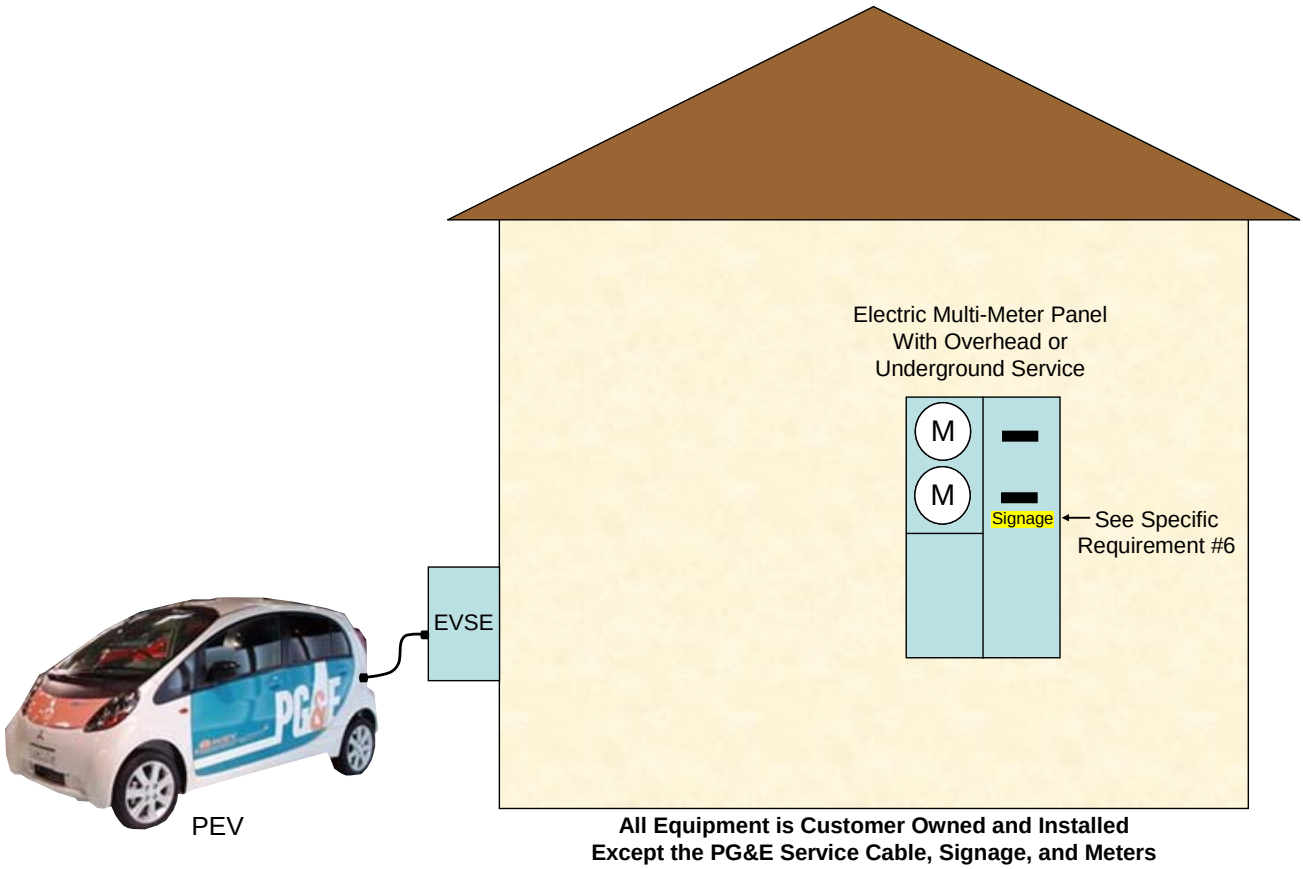

Pros:

- Maintain existing rate schedule for house load
- Separate baseline allotment for EV load

Cons:

- Additional expense for multi-meter panel installation
- Service upgrade may be required due to added EV load

©2011 Pacific Gas and Electric Company. All rights reserved.

PG&E Standards and Requirements for Plug-In Electric Vehicle Interconnections

Residential: E-9B Time Of Use (TOU) rate
Second-Meter Panel Option Connected to Existing Meter Panel; Overhead Service

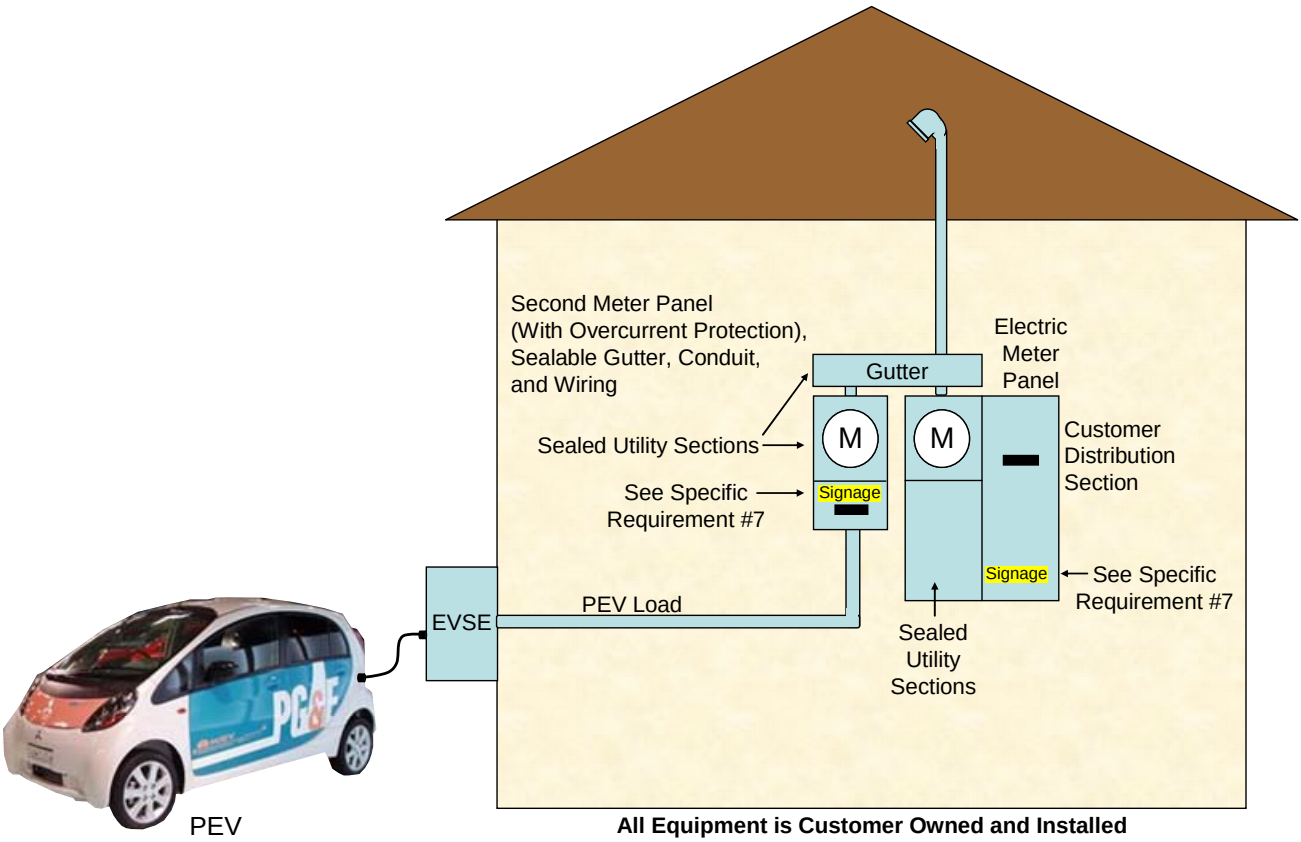

All Equipment is Customer Owned and Installed Except the PG&E Service Cable, Signage, and Meters

Pros:

- Existing panel upgrade may not be required
- Maintain existing rate schedule for house load
- Separate baseline allotment for EV load

Cons:

- Additional expense to accommodate second-meter panel installation
- Not allowed by all local (city/county) inspection agencies or the authority having jurisdiction

©2011 Pacific Gas and Electric Company. All rights reserved.

PG&E Standards and Requirements for Plug-In Electric Vehicle Interconnections

Residential: E-9B Time Of Use (TOU) rate
Second-Meter Panel Option Connected to Existing Meter Panel; Underground Service

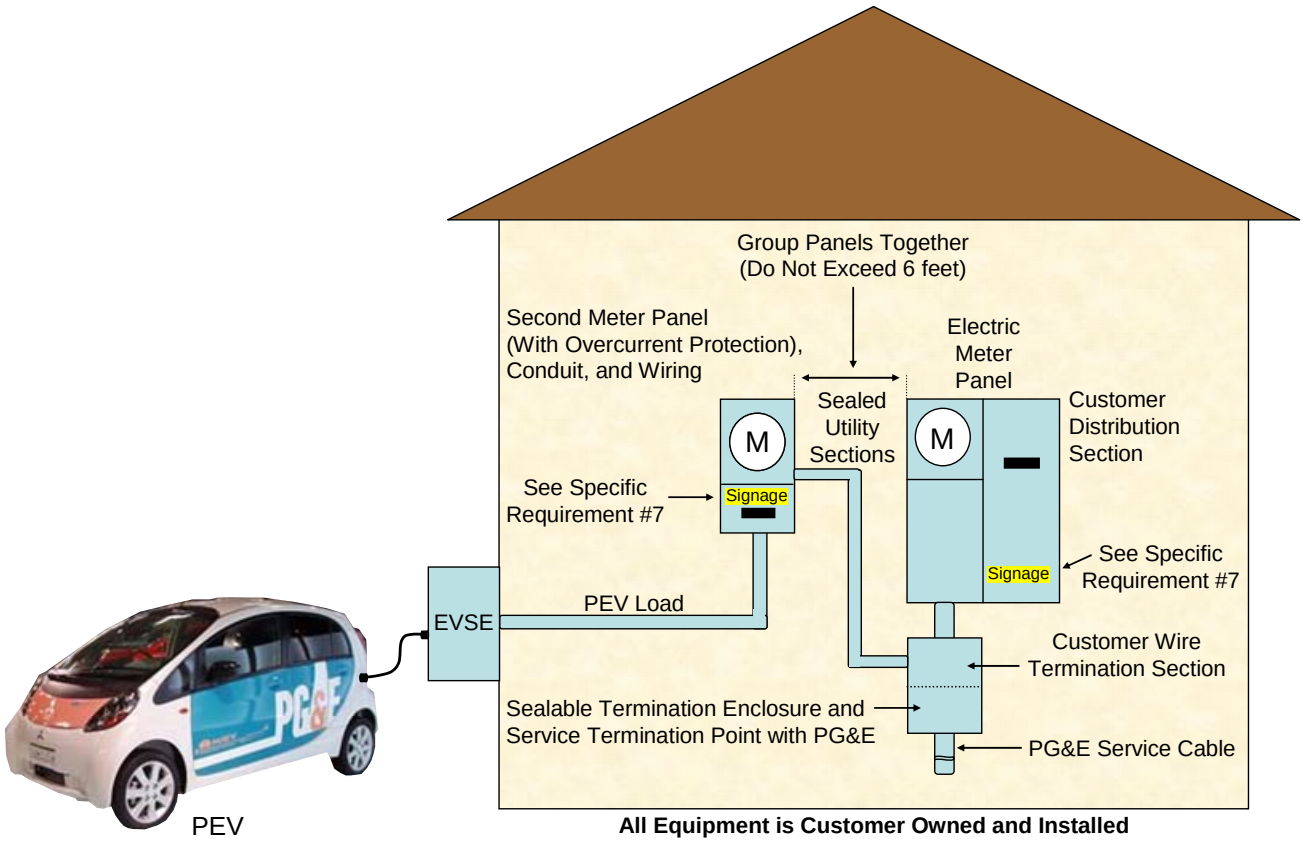

All Equipment is Customer Owned and Installed Except the PG&E Service Cable, Signage, and Meters

Pros:

- Existing panel upgrade may not be required
- Maintain existing rate schedule for house load
- Separate baseline allotment for EV load

Cons:

- Additional expense to accommodate second-meter panel installation
- Service upgrade may be required due to added EV load
- Not allowed by all local (city/county) inspection agencies or the authority having jurisdiction

©2011 Pacific Gas and Electric Company. All rights reserved.

PG&E Standards and Requirements for Plug-In Electric Vehicle Interconnections

Approved By	Roozbeh (Rudy) Movafagh - Manager, Electric Distribution Standards and Strategy
Document Contact	Daniel Jantz – Senior Distribution Specialist, 8-223-6664, 415-973-6664
Inclusion Plan	This bulletin will be Incorporated into Appendix B of the 2011 *Greenbook*.

©2011 Pacific Gas and Electric Company. All rights reserved.

SmartMeter(TM) Electric Network Requirements for Indoor Meter Rooms and High-Rise Building Construction

Summary

This Bulletin provides SmartMeter(TM) infrastructure installation and construction requirements for customers designing indoor electric meter rooms and high-rise buildings. This will address below-grade and multiple above-grade meter room situations such as those that may exist in an urban, high-rise environment to ensure PG&E's SmartMeter™ mesh network is established for these customers. These provisions are required for commercial and/or residential, single or multiple, indoor meter rooms to ensure SmartMeter™ electric network communication access and performance.

Affected Document

Electric and Gas Service Requirements (Greenbook), specifically Section 5.2

Target Audience

All PG&E customers including contractors, developers, builders, architects, electricians, and plumbers. PG&E employees including electric metering, inspectors, SmartMeter™ Operations Center (SM OC), and service planning.

What you need to know

To make sure customers' SmartMeters™ are connected to the SmartMeter™ mesh network, provisions must be made for access to mount equipment and pathways for radio frequency communications. It is important to make the necessary provisions for SmartMeter™ equipment early in the planning stage for high-rise or below-grade meter room situations to prevent additional costs from being incurred by customers and/or by PG&E. Special provisions to facilitate the installation of SmartMeter™ technology meters and equipment include:

- Access by PG&E personnel for placement of radio frequency equipment
- Path for radio frequency (RF) signal propagation (i.e., conduit)
- Placement of ancillary RF equipment (in-room relay or access point)
- Conduit and cable routing. Placement and mounting of antennas (MPACK or Salt-shaker antennas)

Please review the drawings on pages 3 through 7 which illustrate these required provisions. The minimum requirements in this bulletin should not preclude applicable building, fire, or electrical code requirements.

Because many of the buildings and situations where these provisions will be required are custom in nature, design plans must be submitted to your local service planner for review by the local meter shop supervisor and any other appropriate department. Communicating early in the design process will allow for additional site-specific review by the SM OC Tier 4 Analyst(s).

©2012 Pacific Gas and Electric Company. All rights reserved.

SmartMeter(TM) Electric Network Requirements for Indoor Meter Rooms and High-Rise Building Construction

Requirements for Details A, B, and C:

Conduit Size: 3-inch in diameter. The 3-inch conduit is not required to be installed in the floor for meter rooms at grade level. Only in the ceiling.

Conduit Type: Non-metallic Schedule 40 or better.

Conduit Caps: Non-metallic permanent caps, of the same conduit type and size, must be placed on both ends of the conduit. The cap ends should be flush with the ceiling or floor surface.

Firestop System: Install as required by local building, fire, or electrical code.

Conduit Placement: Inside the meter room. Preferably in front of the meter panel. The conduit must not be blocked by any equipment or objects.

Requirements for Details C, D, and E:

Firestop System: Not required. Do not install.

Conduit Size: 2-inch in diameter.

Conduit Type: Conduits installed, in walls, ceilings, floors, or concrete must be made of rigid steel. For all other locations the conduit type can be electrical metallic tubing (EMT) or better.

Conduit Cap: A temporary cap, of the same type and size as the conduit, must be placed on the end of the conduit next to the meter panel.

Conduit Termination Inside: The conduit must be terminated in a horizontal position on top of the meter panel section and 6 to 12 inches from the front of it. The conduit must **not** enter or pass through the switchgear or enclosure.

Conduit Termination Outside: The conduit must terminate in a horizontal position, inside a termination enclosure, on the outside building wall. The conduit must be 8 to 10 feet above grade level and protrude 1-inch outward from the wall.

Termination Enclosure: A minimum 6” x 6” x 6”, NEMA 3R rated, with an accessible front cover. It must be permanently installed to the outside wall with the conduit terminated inside.

Conduit Bends: Any bend must have a minimum 12-inch radius.

Junction box: A minimum size of 12” x 12” x 4” is required for pulling when the total number of degrees of conduit bends exceeds 270 between end points or junction boxes. A junction box is also required when the conduit run length exceeds 100 feet. The total length of all conduits must not exceed 475 feet.

Pulling Tape: Rated for a minimum of 500 lbs and placed inside the conduit for its entire length from end to end to facilitate cable pulling.

Transformer Rooms: Conduit must **not** be installed inside of a transformer room. Conduits can be installed in the floors, ceilings, or walls of the room.

Working Space: The open area that must be maintained around all

©2012 Pacific Gas and Electric Company. All rights reserved.

switchboards, metering enclosures, and the outdoor conduit.

1 Above the entire top of switchboard or enclosure a minimum of 12 inches of vertical clearance.

2 In front of the switchboard a minimum of 48 inches of horizontal clearance and extending to a height 12" above the switchboard or enclosure.

3 In front of the location where the outdoor conduit terminates a minimum area of 36 inches deep, as measured from the outside building wall, by 30 inches wide and extending upward to 12 inches above the conduit.

Figure 1 - High Rise Building with Indoor Electric Meter Rooms

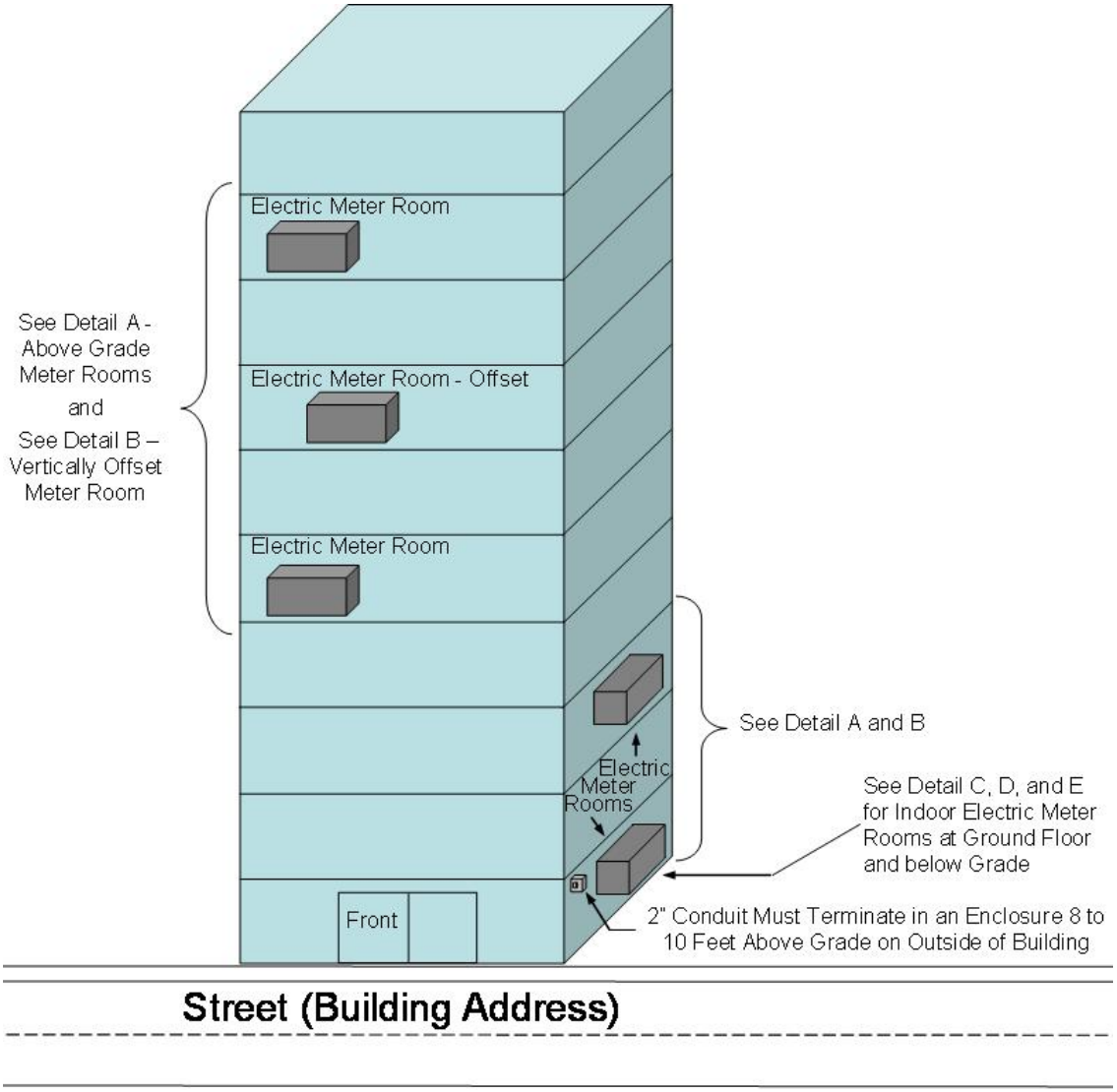

©2012 Pacific Gas and Electric Company. All rights reserved.

SmartMeter(TM) Electric Network Requirements for Indoor Meter Rooms and High-Rise Building Construction

Figure 2 - Detail A: Above Grade Meter Rooms

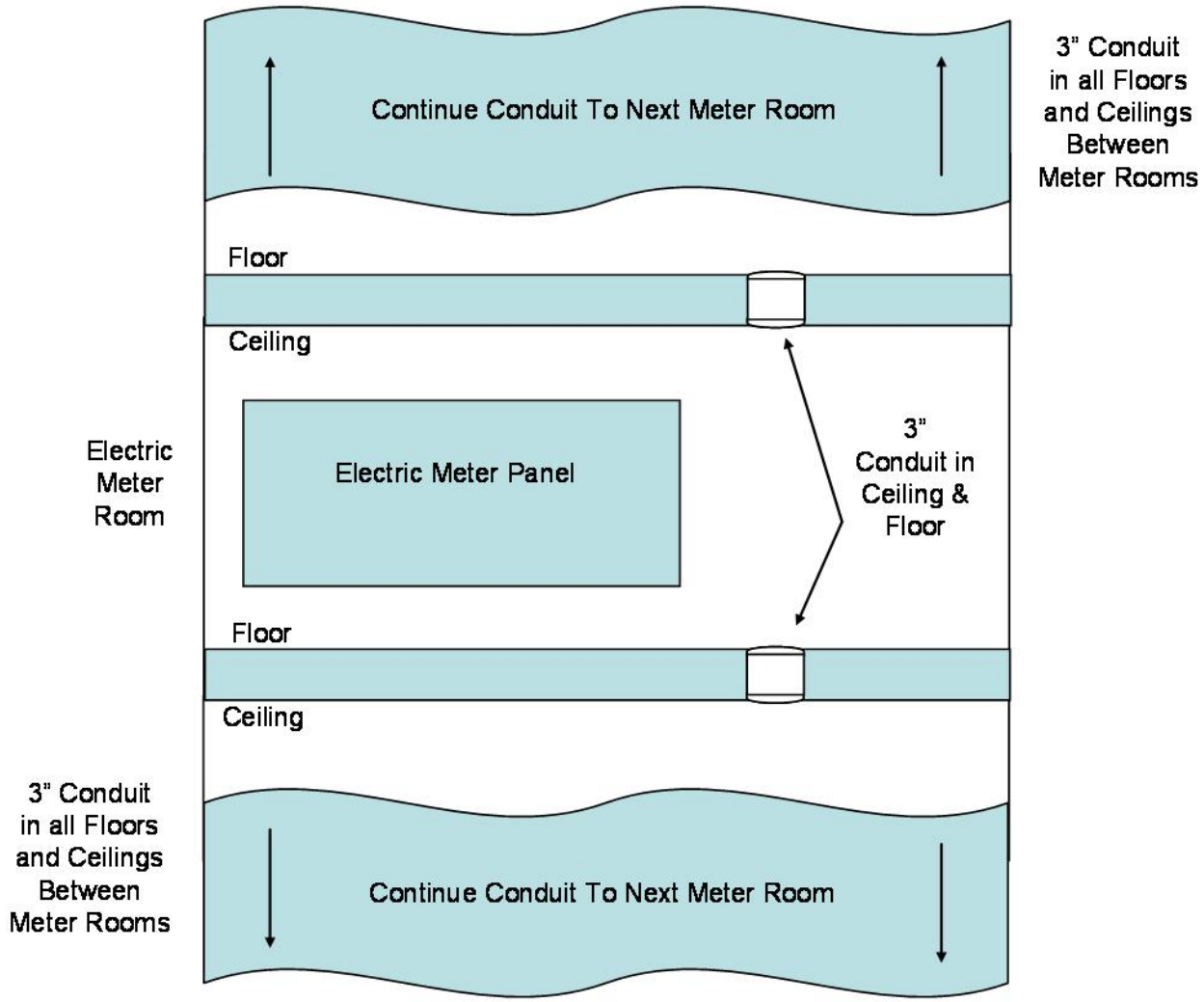

©2012 Pacific Gas and Electric Company. All rights reserved.

SmartMeter(TM) Electric Network Requirements for Indoor Meter Rooms and High-Rise Building Construction

Figure 3 - Detail B: Vertically Offset Meter Rooms

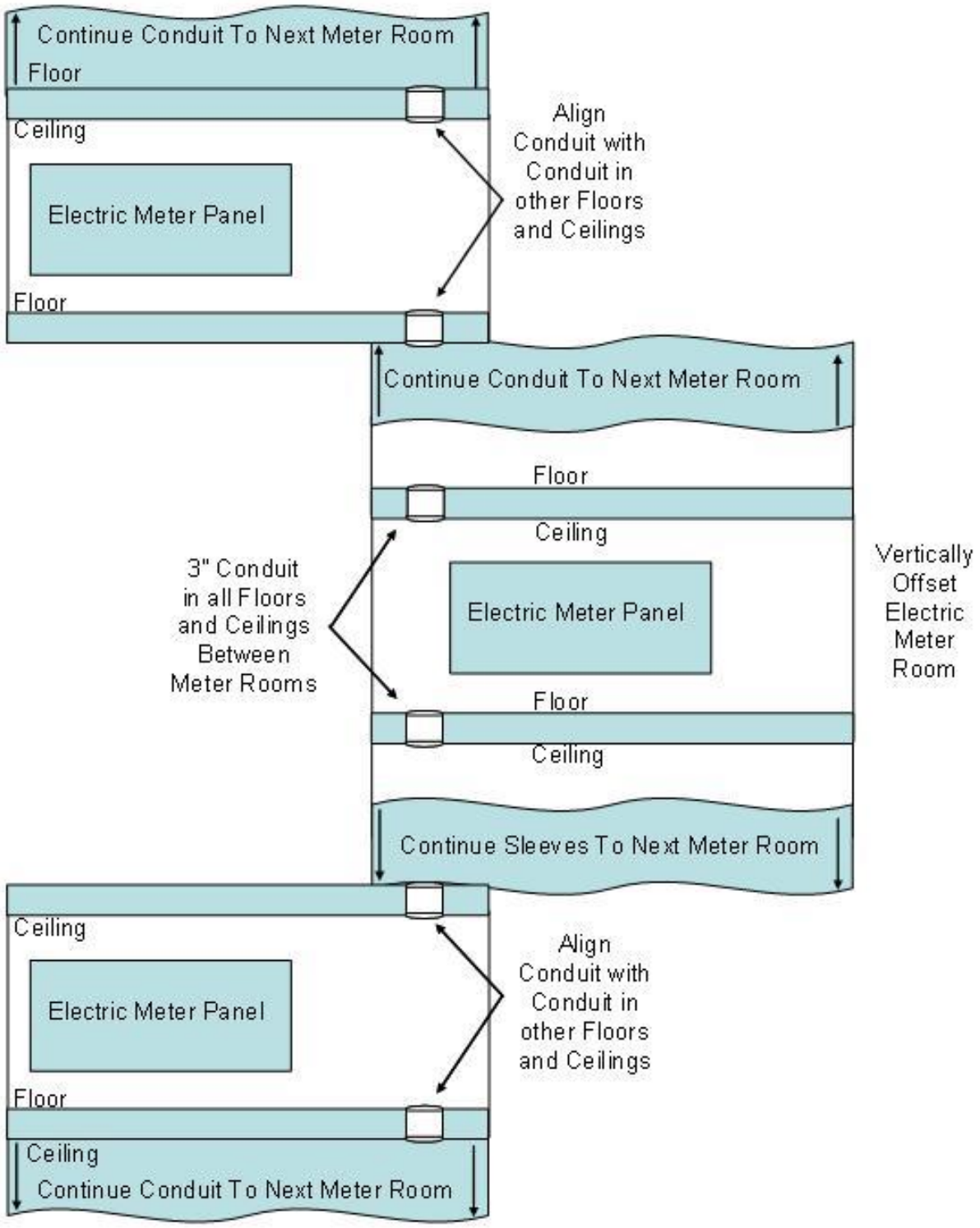

©2012 Pacific Gas and Electric Company. All rights reserved.

SmartMeter(TM) Electric Network Requirements for Indoor Meter Rooms and High-Rise Building Construction

Figure 4 - Detail C – Indoor Electric Meter Room at Ground Floor

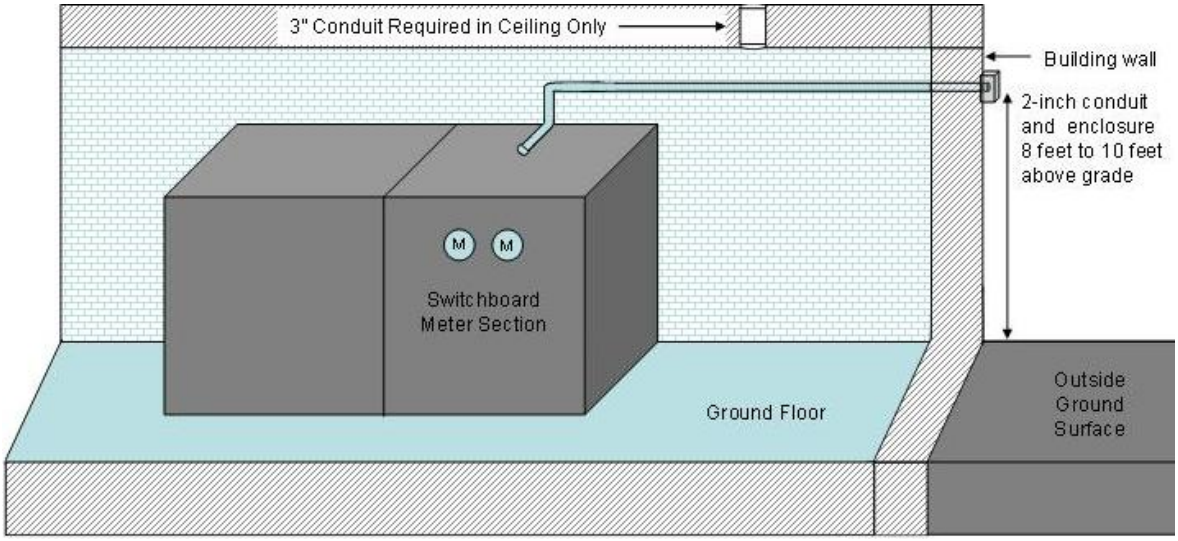

Figure 5 - Detail D – Indoor Electric Meter Room Below Grade (Subsurface)

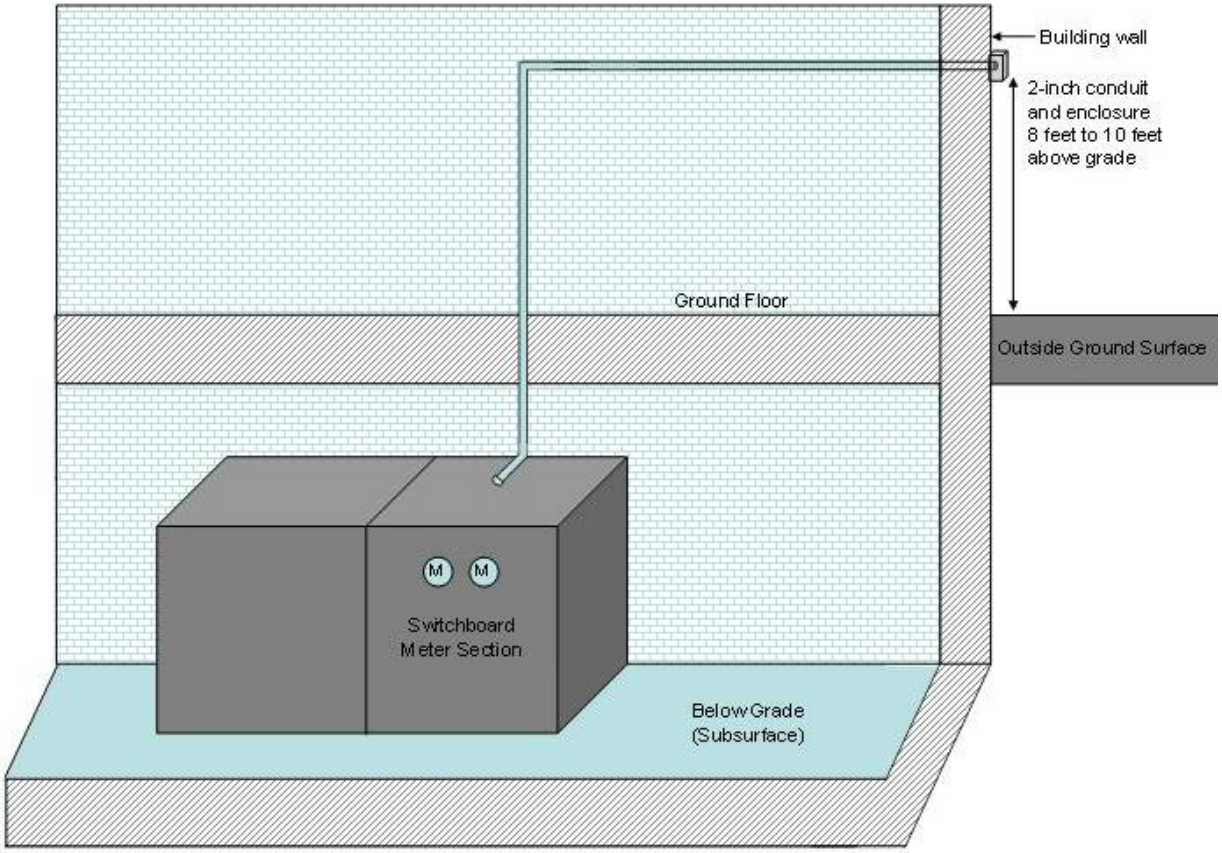

©2012 Pacific Gas and Electric Company. All rights reserved.

SmartMeter(TM) Electric Network Requirements for Indoor Meter Rooms and High-Rise Building Construction

Figure 6 - Detail E – Multiple Electric Meter Rooms at or Below Ground Floor

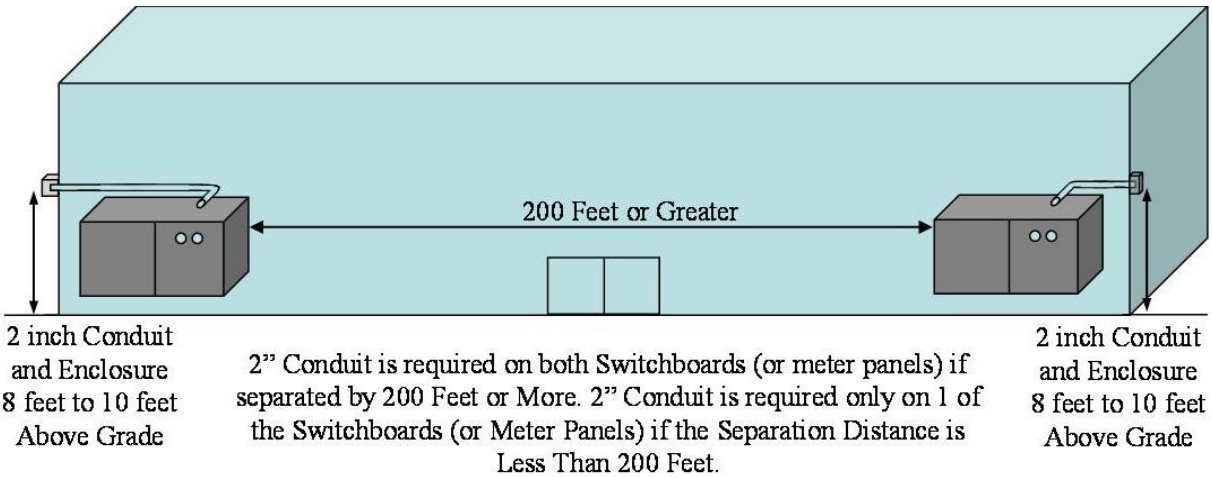

Approved By	James L Meadows, Director, Smart Meter Project
Document Contact	Eric Schoenman, Senior IT Operations Analyst, SmartMeter™ Operations Center Daniel Jantz, Senior Distribution Specialist, 8-223-6664, 415-973-6664
Inclusion Plan	This Bulletin will reside on PG&E's Technical Information Library and will be in effect until cancelled or incorporated by another document. The information in this Bulletin will be included into the *Electric and Gas Service Requirements (*Greenbook*)Manual* and the *Electric Meter Work Practices Manual*.

©2012 Pacific Gas and Electric Company. All rights reserved.

VNEM Installation Requirements

Summary

This bulletin describes requirements for metering and interconnecting customer generation for a Virtual Net Energy Metering (VNEM) installation. The VNEM meter will only measure the generation produced and must not be tied into any of the individual residential or common use meters at the premise. The totalized amount of generation registered on the VNEM meter will be shared, through the PG&E billing process, by all residents at the site of the VNEM's interconnection.

Affected Document

None

Target Audience

PG&E customers that qualify under the VNEM tariff (**NEMVMASH** or **NEMV**) and PG&E employees who perform customer contact and electric meter field work.

What you need to know

PG&E Standards and Requirements for Virtual Net Metering (VNEM)

General Requirements

1. Developers must contact PG&E's Generation Interconnection Services (GIS) and the local Service Planning office along with submitting all applicable documents for approval before starting any installations.
2. Submit detailed drawings and pictures showing the point of interconnection to GIS.
3. All installations and equipment must be approved by PG&E and approved by the local (city/county) inspection agency or the Authority Having Jurisdiction (AHJ) before any VNEM meter is set by PG&E.
4. For any VNEM installation that requires a service disconnect/reconnect, developers must request for a local PG&E inspector and metering department to inspect and approve all line side tap connections before reconnecting the service.
5. For new and existing construction, the VNEM point of interconnection will require prior review and approval from all appropriate PG&E departments before any connections can be made.
6. Developers must install UL approved service equipment with provisions for making solar interconnections that are **not** in any PG&E sealed sections and ahead of all tenant / house meters. Refer to Figure 1.

©2013 Pacific Gas and Electric Company. All rights reserved.

VNEM Installation Requirements

UL Approved for Generation Interconnection in the Circled Area

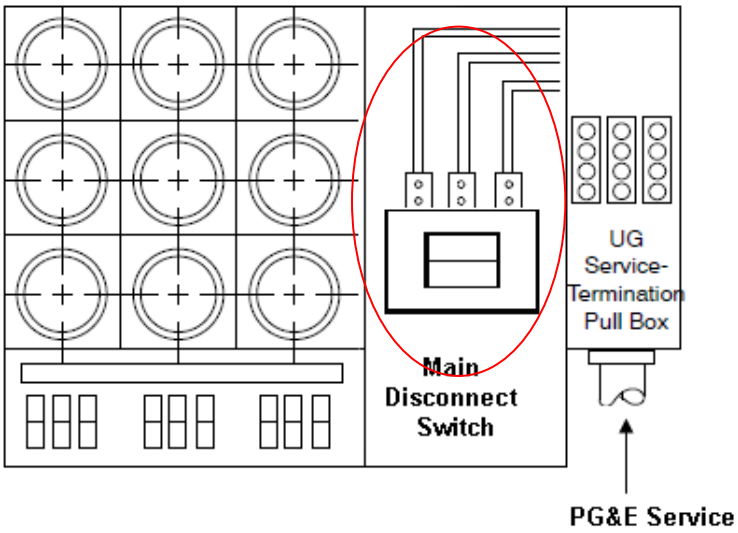

Figure 1: UL Approved Panel For Solar Interconnection

Specific Requirements

1. Applicants will provide, own, and install all equipment except for the PG&E VNEM meter and metering equipment (i.e. current transformers, test switch).

2. VNEM meter panels must have test bypass facilities and meet the requirements in the following Greenbook Sections:

    - Sections 9.4 – 9.6 for 225 A or less

    - Sections 9.7 – 9.9 for 400 A

    - Sections 9.14 for 600 A three phase and above. Refer to Table 9-3 and Table 9-4 for wall-mounted and pad-mounted equipment requirements.

3. VNEM meter panels must meet meter height and working space clearances as specified in Section 5.4.3 in the Greenbook.

4. **As of 6/1/2013**, VNEM meter panels must have the generation connected to the **LOAD** side of the VNEM meter socket and the utility grid on the **LINE** side of the socket.

5. **Each VNEM** conductor must be clearly labeled “VNEM PV” **at the point of interconnection** for PG&E field personnel to identify.

©2013 Pacific Gas and Electric Company. All rights reserved.

VNEM Installation Requirements

6. Point of interconnection

   a) Underground Service Multi-meter Panels:

   - Inside the main switch section, as shown in Figure 2 (a) with approval from the local AHJ, or
   - Install a sealable wiring gutter, as shown in Figure 2 (b)

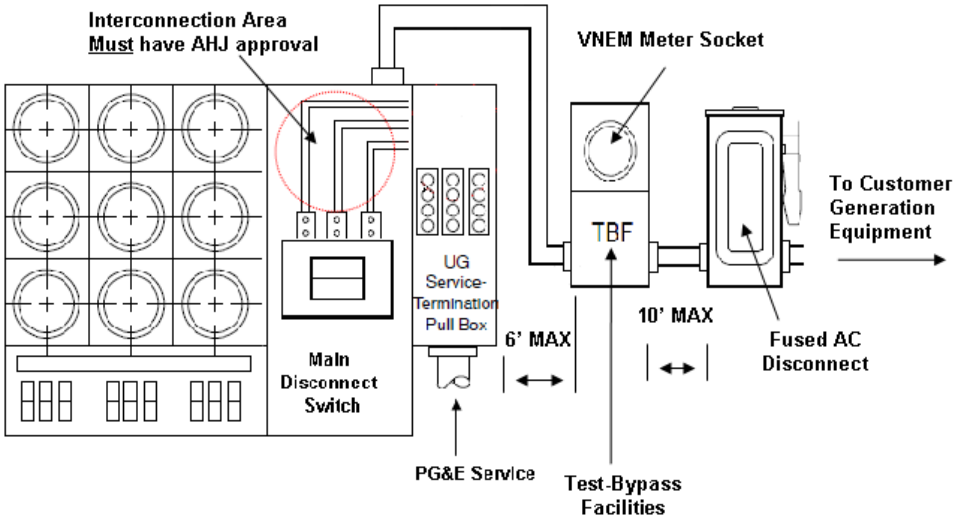

Figure 2(a): Point of Connection Inside Main Switch for Underground Service

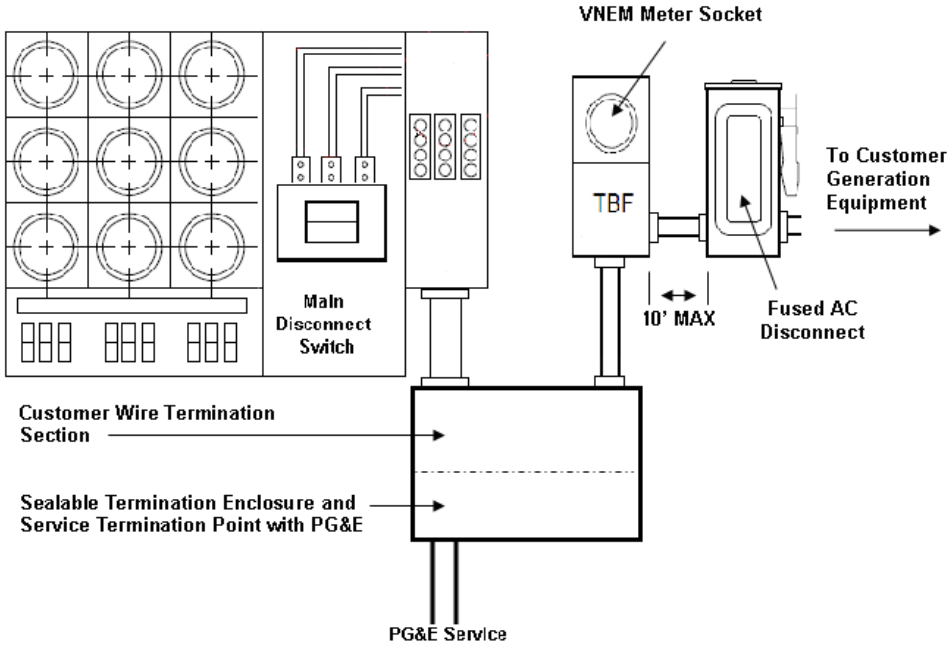

Figure 2(b): Point of Connection with Termination Enclosure for Underground Service

©2013 Pacific Gas and Electric Company. All rights reserved.

VNEM Installation Requirements

b) Overhead Service Multi-meter Panels:

- Inside the main switch section, as shown in Figure 3 (a) with approval from the local AHJ, or
- Install a sealable wiring gutter, as shown in Figure 3 (b)

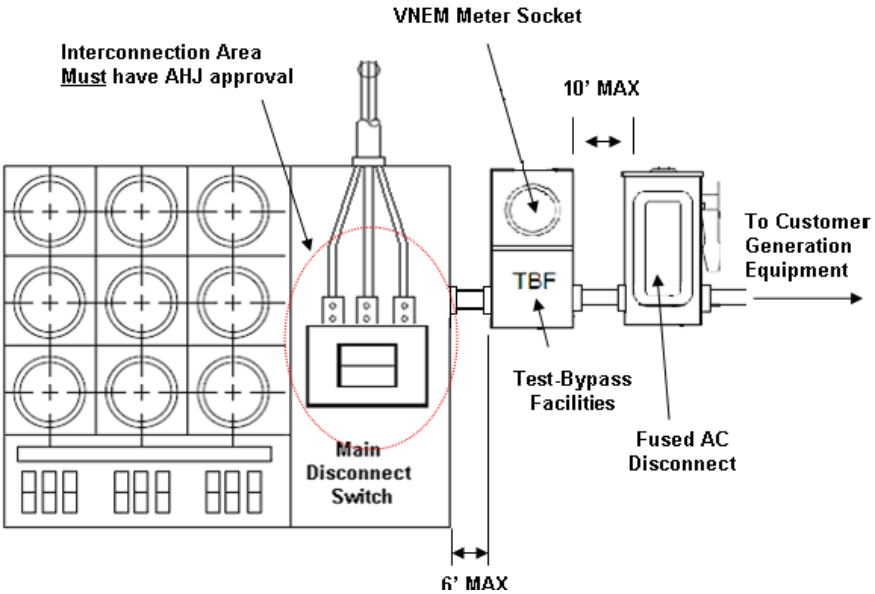

Figure 3(a): Point of Connection for Overhead Service

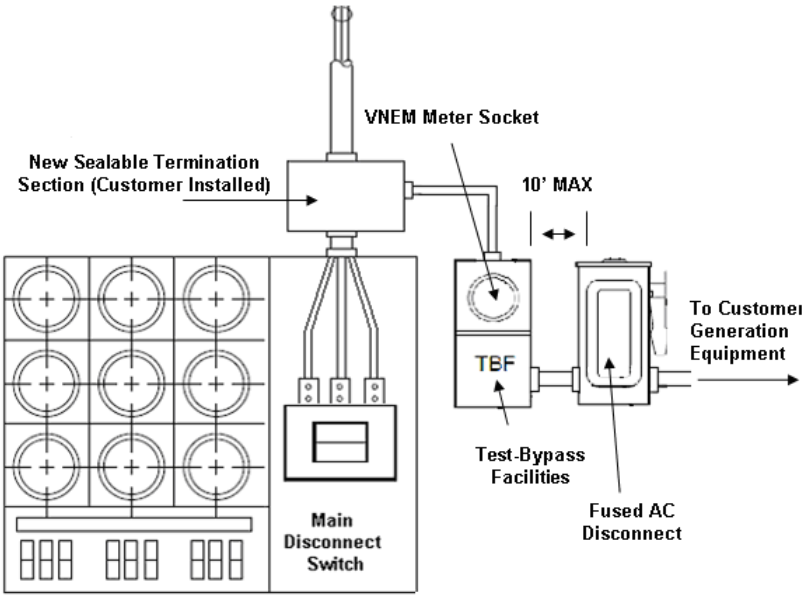

Figure 3(b): Point of Connection for Overhead Service

©2013 Pacific Gas and Electric Company. All rights reserved.

VNEM Installation Requirements

7. AC disconnects requirements:

    - Listed on PG&E Distribution Interconnection Handbook's approved list. http://www.pge.com/includes/docs/pdfs/shared/customerservice/nonpgeutility/electrictransmission/handbook/disconnectswitchcrossref.pdf
    - Must have blades to visually verify separation.
    - A fusible AC disconnect switch is required for line side interconnections before the main breaker.
    - Be within 10 feet line of site of the VNEM meter or interconnection point.
    - Accessible at all times (24/7/365).
    - Lockable in the open position.
    - Gang operated (One handle opens or closes all phases simultaneously).

8. Final inspection requirements:

    - All equipment has been approved by PG&E and the local (city/county) inspection agency or the authority having jurisdiction.
    - VNEM point of connection has been reviewed and approved by all of the appropriate PG&E departments.
    - The appropriate signage and maps are displayed to easily locate the VNEM meter panel and AC disconnects.

Approved By	Alex Yan, Meter Engineering Supervisor
Document Contact	Albert Pham, Senior Meter Engineer, 415-973-6412
Inclusion Plan	This will reside in the Technical Information Library, under the Electric Metering Bulletins section.

©2013 Pacific Gas and Electric Company. All rights reserved.

Requirements for Line Side Tap Interconnections for Distributed Generation

SUMMARY

This bulletin describes requirements for any line side tap interconnections performed on 0-600 Volt meter panels and switchboards for standard and expanded Net Energy Meter (NEM) customers. Any type of modification made to metering equipment that interconnects a customer generation source ahead of the main service disconnect is considered a line side tap. A line side tap may also be known as a supply side tap.

Level of Use: Informational Use

AFFECTED DOCUMENT

N/A

TARGET AUDIENCE

PG&E customers that qualify under the standard or expanded NEM tariff and PG&E employees who perform customer contact and electric field work.

WHAT YOU NEED TO KNOW

General Requirements

PG&E's preferred interconnection for distributed generation interconnections is on the load side of the panel, after the service main disconnect. This interconnection is described in National Electrical Code (NEC) 705.12(D)(1) and (D)(2).

For line side interconnections the following requirements apply.

1. A variance request must be submitted to the PG&E Electric Generation Interconnection department for review by Electric Metering Engineering and Electric Distribution Standards departments.

2. The interconnection must be ahead of the main breaker in the customer section of the equipment and not in the PG&E, termination, metering, or other sealed compartment or section.

3. Generation conduit and conductors must not be routed through any PGE sealed sections for the purpose of interconnection.

4. A fused AC disconnect switch must be installed as required for a line side tap interconnection. The fused AC disconnect switch must meet all of the PG&E requirements as described in Numbered Document 060559, Disconnect Switch Requirements For Distributed Generation Customers.

5. The Authority Having Jurisdiction (AHJ) must sign off and approve the line (supply) side tap and fused AC disconnect before PG&E will re-energize.

©2016 Pacific Gas and Electric Company. All rights reserved.

6. The Authority Having Jurisdiction (AHJ) must sign off the building permit for the generation system before PG&E will give the final approval to operate.

Specific Requirements

1. For line side tap requests, developers must submit the following to EGI for review:
    a. Single line diagram
    b. Detailed drawings and pictures showing the point of interconnection
        i. Drawings must provide specific details on where in the compartment section and how the interconnection will be made.
        ii. Pictures must show the whole service panel and marked-up where the interconnection will be.
2. Figures 1-3 below distinguishes separation between PG&E's and the customer's section and also the designated line side tap locations.

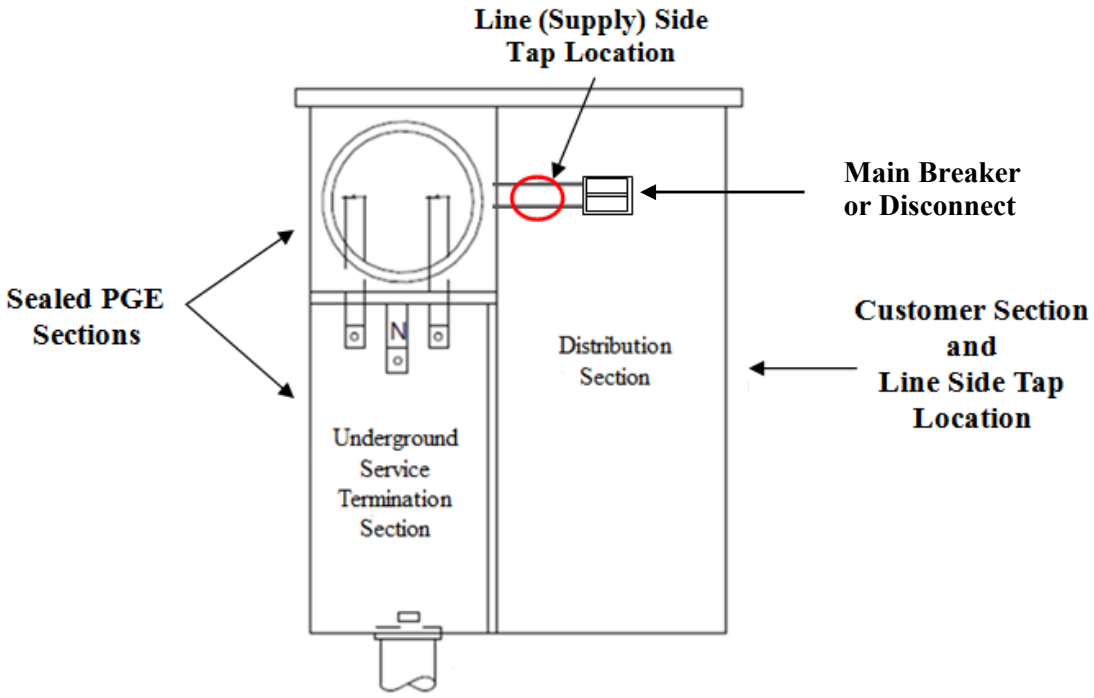

Figure 1. Typical Wall-Mounted Meter Panel

©2016 Pacific Gas and Electric Company. All rights reserved.

Requirements for Line Side Tap Interconnections for Distributed Generation

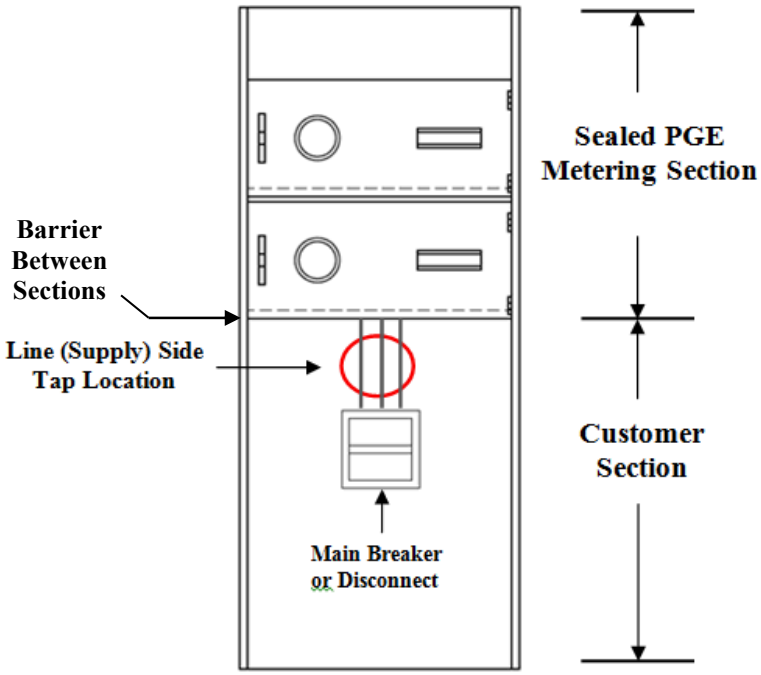

Figure 2. Switchboard with Metering Section Above the Main Breaker Section

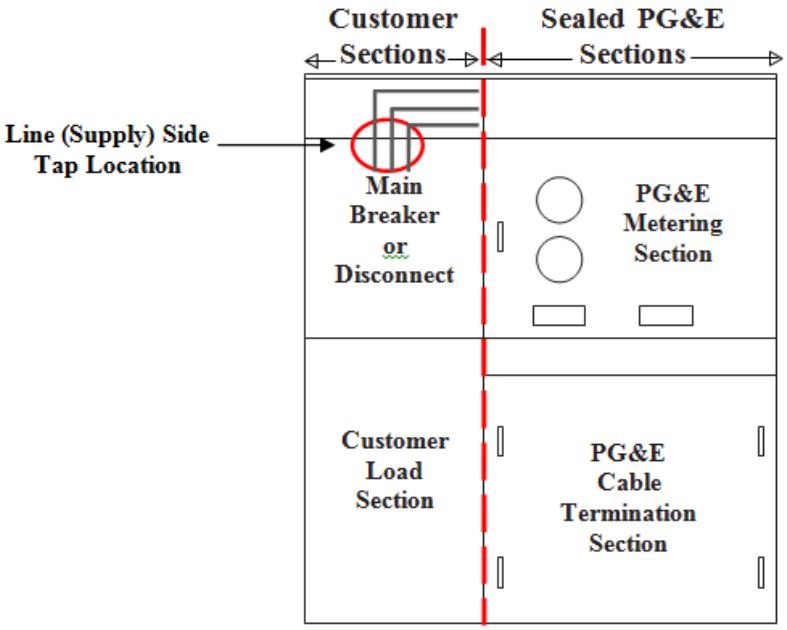

Figure 3. Switchboard with Metering Section Above the Termination Section

©2016 Pacific Gas and Electric Company. All rights reserved.

Requirements for Line Side Tap Interconnections for Distributed Generation

DOCUMENT APPROVER

Alex Yan, Meter Engineering Supervisor

DOCUMENT CONTACT

Albert Pham, Senior Meter Engineer, 415-973-6412

INCLUSION PLAN

This Bulletin will reside on PG&E's Technical Information Library and will be in effect until cancelled or incorporated by another document.

The information in the Bulletin will be included into the *Electric and Gas Service Requirements (Greenbook) Manual.*

©2016 Pacific Gas and Electric Company. All rights reserved.

Street Light Conduit Detail

Notes:
1. PG&E inspector to make all final decision about trench and duct installation.
2. Do not exceed 300 degrees in any primary or secondary conduit run.
3. PG&E to inspect all work performed by applicant.
   Applicant to call PG&E inspector 48 hours in advance.
4. Trench work buried without being approved by inspector will be re-opened by applicant.
5. All conduits to be proven free by means of mandrel with PG&E inspector present.
6. 2” conduit horizontal bends to be 3’ radius minimum and 2’ radius minimum vertical bends.
7. All ducts to be temporarily capped by applicant with temporary caps or rigid unglued to prevent debris from entering duct.
8. Polyester pull tape (code: 560154) shall be used for all primary and secondary ducts.
9. All conduits to be terminated with belled ends.
10. Use approved conduit for underground installations.

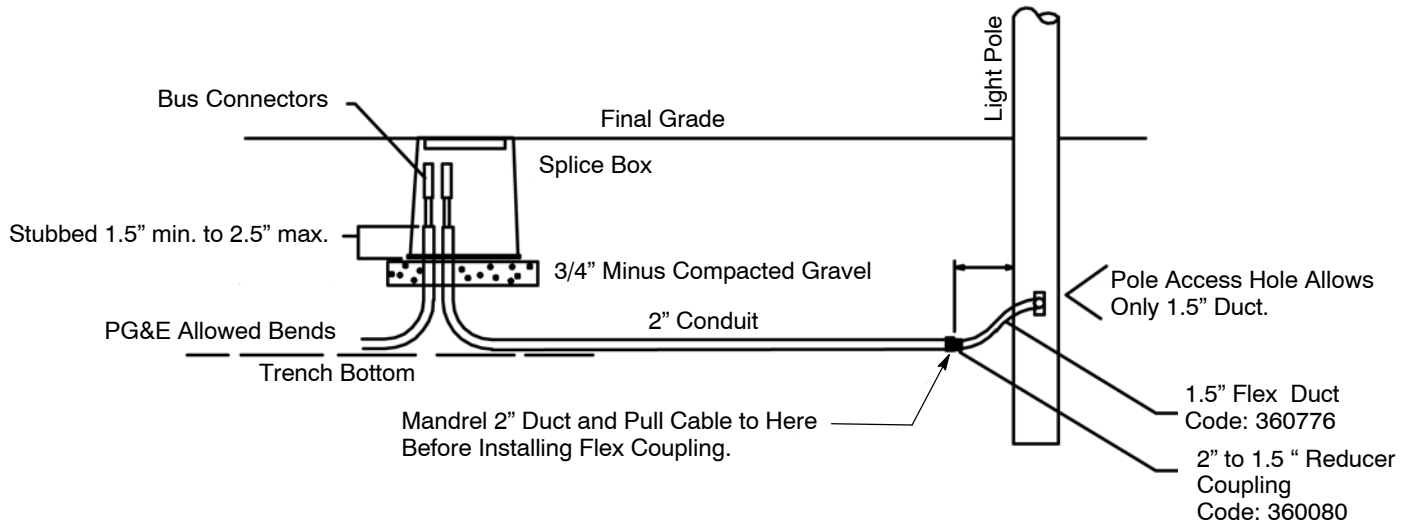

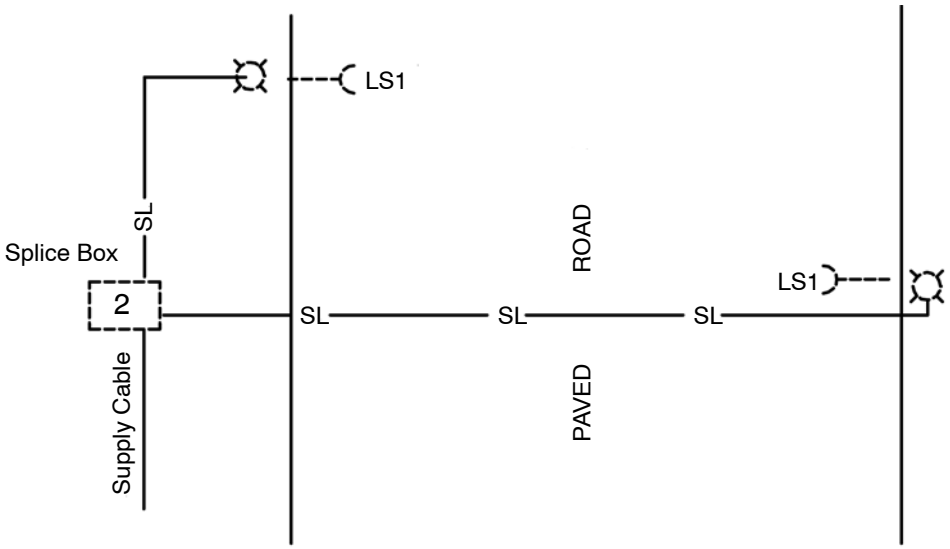

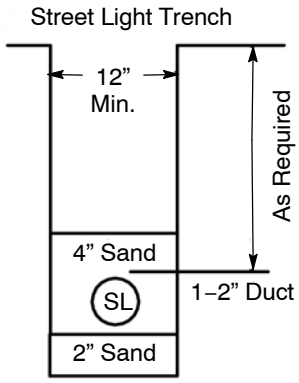

LS1 = PG&E Owned and Maintained Light

June 2014

Flame Resistant (FR) Requirement Letter

Dear Customers and Contractors,

As you may be aware, PG&E has been in the process of implementing new work procedures for employees who may be exposed to Arc Flash Hazards. As of January 1, 2009 all impacted PG&E departments are now required to wear Flame Resistant (FR) clothing. This same FR requirement will also apply to,

1) Contractors working for PG&E.
2) Personnel or anyone working on or around PG&E facilities or equipment as of March 1, 2009.

The FR clothing requirement is a significant change for everyone performing work on or around PG&E facilities and equipment. On March 1st PG&E began posting signage on substations, switch yards, power plants as well as other facilities that have been designated as areas with an FR requirement. This means that access to such facilities will require everyone to be in FR clothing. PG&E facilities such as vaults, primary and secondary enclosures, pad-mounted and subsurface equipment may not have posted signage but still require everyone working in or around these facilities to be in FR clothing. Work will not be able to be performed in and around such facilities without all personnel, including non PG&E personnel, wearing the appropriate level of FR clothing.

The technical requirements listed in the "Arc Flash Summary Table" on page 2, will help you determine who needs to be in FR clothing, what level is required, and when.

Four pre-screened suppliers that sell FR clothing are identified on page 3 for your convenience.

To ensure that we address all your questions and concerns regarding this important change, please feel free to email us at AFHProgramCommittee@pge.com. A member of our implementation committee will get right back to you.

PG&E's commitment to safety is at the heart of this important change. We appreciate your support in ensuring the highest levels of safety for all that work on or around PG&E's facilities.

Flame Resistant (FR) Requirement Letter

Arc Flash Assessment Summary

PG&E has completed arc flash hazard assessments on its electrical systems. A summary of the maximum identified hazards are shown in the table below. Every person shall ensure that they wear Flame Resistant (FR) clothing that has an arc rating greater than or equal to the available heat energy whenever they are within the Arc Flash Boundary. In addition, everyone shall ensure that they wear clothing that cannot melt or ignite and continue to burn in the presence of electric arcs to which personnel could be exposed, whenever they are working on or around PG&E electrical facilities. All garments shall have tags visible from the outside that clearly identifies the garment as Flame Resistant (FR) and clearly indicates the arc rating (HRC category) of the garment. All garments shall have a minimum rating of HRC 2.

Arc Flash Summary Table

Work Area Description	Maximum Arc Flash Hazard (cal/cm^2)	Maximum Arc Flash Boundary (feet)
500kV at 135”	6	20
230kV at 63”	13	15
115kV at 40”	24	12
60kV-70kV at 36”	16	9
4kV-12kV at 25”	25	9
12kV -34kV at 28”	25	9
4kV-21kV at 15” (Rubber Glove)	25	9
4kV-21kV Switchgear	100	85
120V-480V Line Equipment	8	5.5
120V-240V Meters	8	5.5
480V Self-contained Meters	25	15
480V CT Meters	8	5.5

Additionally, everyone shall be required to wear FR clothing when climbing electrical towers or when entering posted PG&E facilities. The table above shows the maximum hazards for all of PG&E equipment. Electrical equipment located in powerhouses, power plants, gas compressor stations, office buildings and warehouses have widely varying arc flash hazards. In these locations, individual equipment will be labeled with the arc flash hazard information.

Flame Resistant (FR) Requirement Letter

Flame Resistant Clothing Suppliers

The names of some Flame Resistant (FR) clothing suppliers listed below are in case you wish to contact them (the suppliers are listed in alphabetical order.) Each of these suppliers should be able to provide the necessary FR clothing required by PG&E.

Aramark Uniform Services www.aramark-uniform.com
Jerry Hunt, Regional Account Executive
Office: 925-672-2641
Cell: 925-389-1853
Fax: 925-672-2741
Email: jerry.hunt@uniform.aramark.com

Cintas www.cintas.com
Michael Burns, Catalog Specialist
777 139th Avenue, San Leandro, CA 94578
Office: 510-352-6330
Cell: 925-980-2434
Fax: 510-352-0348
Email: burnsm@cintas.com

Program Management International (PMI) www.pmionline.us
Renee Ramos-Hitzel, President
27 Spectrum Pointe, Suite 309, Lake Forest, CA 92630;
Office: 949-215-5750
Cell: 949-302-5550
Toll Free 800-984-3201
Fax: 714-464-4186
Email: renee@pmionline.us

Tyndale www.tyndaleusa.com
Brian Degerness, Regional Sales Representative
32716 Viewcrest Drive, Warren, OR 97053
Office: 503-366-3507
Cell: 503-396-1703
Toll Free 888-366-3507
Fax: 503-961-0668
Email: bdegerness@tyndaleusa.com

Flame Resistant (FR) Requirement Letter

It is the responsibility of each customer to check with the suppliers to determine their pricing, ability to meet the minimum PG&E specifications [i.e., Hazard/Risk Category (HRC) of 2 - minimum arc rating required for the protective garment], and availability. The contact information listed for each of these suppliers is provided for your information only and is not an endorsement of one supplier over another.

Sincerely,

PG&E Arc Flash Hazard Program Committee

Updated Separation Requirements For Conduit in Joint Trench

SUMMARY

This utility bulletin updates Electric Standard 062288, "Underground Conduits" and Utility Standard S5453, “Joint Trench” with the requirements listed below:

The minimum separation requirement must be 1.5 inch (in.) between:

- Secondary to: Secondary, service, and streetlight conduit
- Service to: Service and streetlight conduit

The minimum separation requirement must be 3 in. between:

- Primary-to-primary conduit
- Primary to: Secondary, service, and streetlight conduit

This increase in separation is required to improve access to the conduits during future maintenance, re-routing and replacement of the facilities.

Note that the 3 in. requirement above is already included in Electric Standard 062288 but **not** in Utility Standard S5453.

Additionally, separation requirements between Pacific Gas and Electric Company (PG&E or Company) Joint Trench utilities and Non-PG&E owned Foreign Electric duct (e.g., non-PG&E Streetlight) have been added to the updated Table, "Minimum Separation and Clearance Requirements (Inches)", in this utility bulletin. These are not new requirements, but they were not previously located in the Exhibit B table.

The requirements of this bulletin apply to any PG&E job estimate and any PG&E design jobs for New Business and Work Request by Others (NB/WRO), and on any Applicant Design jobs where Globals are issued after the effective date of this bulletin (7/31/2015).

AFFECTED DOCUMENT

Utility Standard S5453, “Joint Trench”

Utility Standard S5453, Exhibit B, “Joint Trench Configurations and Occupancy Guide”

Electric Standard 062288, "Underground Conduits"

TARGET AUDIENCE

Personnel in: electric construction, electric distribution engineering, electric estimating, gas distribution estimating, gas distribution engineering, customer service delivery estimating, and gas construction management.

©2016 Pacific Gas and Electric Company. All rights reserved.

Updated Separation Requirements For Conduit in Joint Trench

WHAT YOU NEED TO KNOW

Utility Standard S5453, “Joint Trench,” Exhibit B, currently shows:

MINIMUM SEPARATION AND CLEARANCE REQUIREMENTS							
		G	DUCT T	DB T	C	S	P
G	(GAS) SEE NOTES 4, 7 & 13	—	12”	12”	12”	6”	12”
T	(TELEPHONE) DUCT	12”	—	1”	1”	12”	12”
T	(TELEPHONE) DIRECT BURY	12”	1”	—	1”	12”	12”
C	(CATV)	12”	1”	1”	—	12”	12”
S	(ELECTRIC SECONDARY)	6”	12”	12”	12”	—	3”
P	(ELECTRIC PRIMARY)	12”	12”	12”	12”	3”	—
SL	(STREETLIGHT) SEE NOTE 5	6”	12”	12”	12”	1”	3”

Utility Standard S5453, “Joint Trench,” Exhibit B, is updated per this bulletin as follows:

MINIMUM SEPARATION AND CLEARANCE REQUIREMENTS (Inches)								
		G	**DUCT T**	**DB T**	**C**	**S**	**P**	**SL**
G	**(GAS) SEE NOTES 4,7, & 13**	-	12	12	12	6	12	6
T	**(TELEPHONE) DUCT**	12	-	1	1	12	12	12
T	**(TELEPHONE) DIRECT BURY**	12	1	-	1	12	12	12
C	**(CATV)**	12	1	1	-	12	12	12
S	**(ELECTRIC SECONDARY)**	6	12	12	12	1.5	3	1.5
P	**(ELECTRIC PRIMARY)**	12	12	12	12	3	3	3
SL	**(STREETLIGHT) SEE NOTE 5**	6	12	12	12	1.5	3	1.5
FE*	**(FOREIGN ELECTRIC SOURCES, NON-PG&E*) SEE NOTE 5**	12	12**	12**	12**	12	12	12

*Must be considered a ‘Utility’ as defined in Utility Standard S5453, “Joint Trench.”

Notes 4, 5, 7, and 13 are located in Utility Standard S5453, Exhibit B, “Joint Trench Configurations and Occupancy Guide.”

**For exceptions, refer to G.O. 128 rule, Section B, Items (1) and (2).

©2016 Pacific Gas and Electric Company. All rights reserved.

Updated Separation Requirements For Conduit in Joint Trench

DOCUMENT APPROVER

Jim Herren, Manager, Gas Distribution Engineering and Design

DOCUMENT CONTACT

Lisseth Villareal, Electric Standards Engineer, Sr

David Krause, Gas Engineer, Codes and Standards - Design and Construction

John Pickering, Expert Business Process Analyst, Distribution Engineering and Design Support

Daniel Jantz, Expert Engineering Standards Technical Specialist, EAM Distribution Standards

INCLUSION PLAN

This update will be included in the next revision of Electric Standard 0662288 “Underground Conduits” and Utility Standard S5453, “Joint Trench,” Exhibit B.

©2016 Pacific Gas and Electric Company. All rights reserved.

TYPICAL
DISTRIBUTION TRENCH

Joint Trench – Franchise Area or P.U.E.

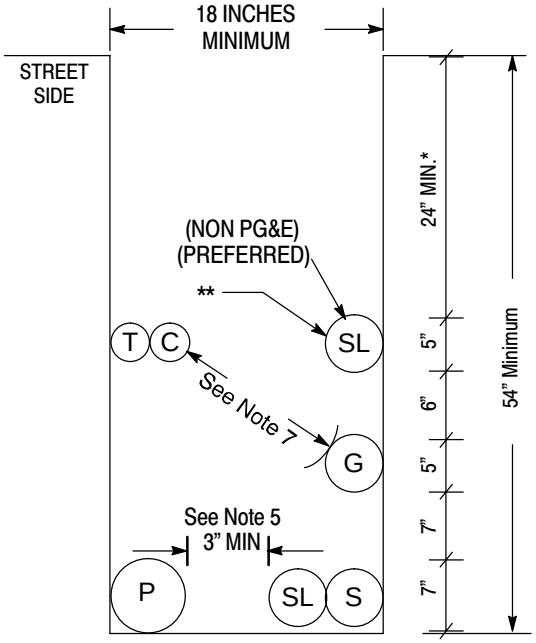

FIG. 1

Placement of the Distribution Trench within a P.U.E. is the preferred method. Trenching in the Franchise Area should only be used when a P.U.E. is unobtainable or otherwise infeasible.

* Increase cover to 30" in the street area (see Note 3).

** Separation must be 12" unless a reduction (6") is mutually agreed upon by affected utilities.

STANDARD TRENCH LOCATIONS

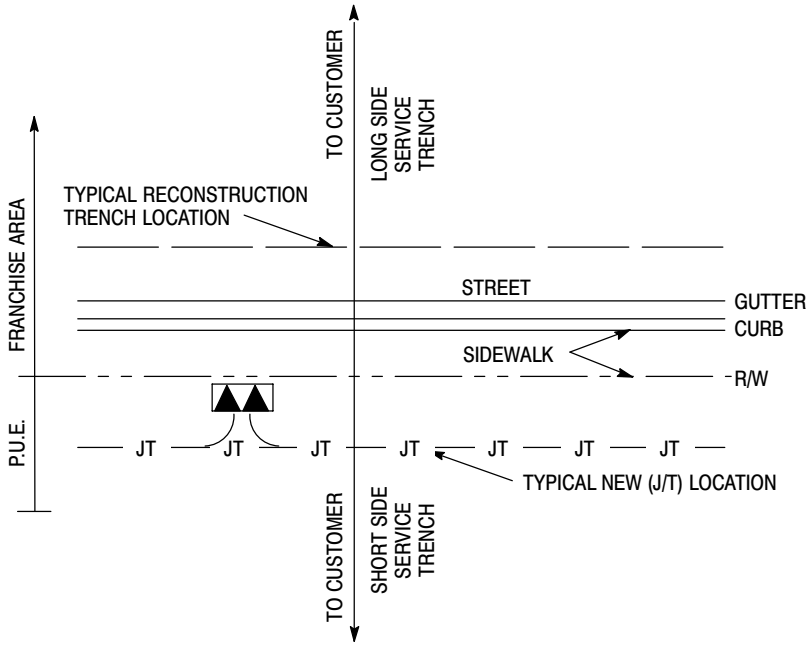

TYPICAL
SERVICE TRENCH

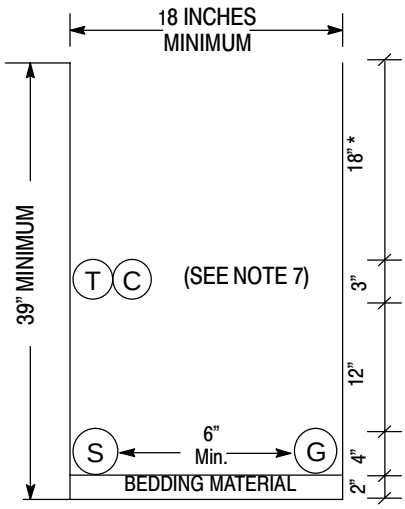

FIG. 2
(View facing Distribution Trench)

MINIMUM SEPARATION AND CLEARANCE REQUIREMENTS

		G	DUCT T	DB T	C	S	P
G	(GAS) SEE NOTES 4, 7 & 13	—	12"	12"	12"	6"	12"
T	(TELEPHONE) DUCT	12"	—	1"	1"	12"	12"
T	(TELEPHONE) DIRECT BURY	12"	1"	—	1"	12"	12"
C	(CATV)	12"	1"	1"	—	12"	12"
S	(ELECTRIC SECONDARY)	6"	12"	12"	12"	—	3"
P	(ELECTRIC PRIMARY)	12"	12"	12"	12"	3"	—
SL	(STREETLIGHT) SEE NOTE 5	6"	12"	12"	12"	1"	3"

SEPARATION AND CLEARANCE DEFINITIONS

Cover:
The term "cover" means the radial distance between the surface of an underground cable, conduit, pipe, or other substructure and the surface elevation (grade).

Backfill:
The term "backfill" refers to the materials used to refill a cut or other excavation, or the act of such refilling after any needed shading is performed.

Shading:
The term "shading" refers to the materials used to provide a measure of separation between facilities installed at different levels within an excavation or cut.

Lift:
The term "lift" is a layer of fill as spread or as compacted or a measurement of material depth that is the rated effective soil depth a compactor can achieve.

Bedding:
The term "bedding" refers to the materials installed beneath facilities at the bottom of a cut or other excavation and intended to provide support and/or protection for those facilities.

JOINT TRENCH CONFIGURATIONS & OCCUPANCY GUIDE

09–27–06

OTHER TYPICAL PG&E DISTRIBUTION JOINT TRENCH CONFIGURATIONS

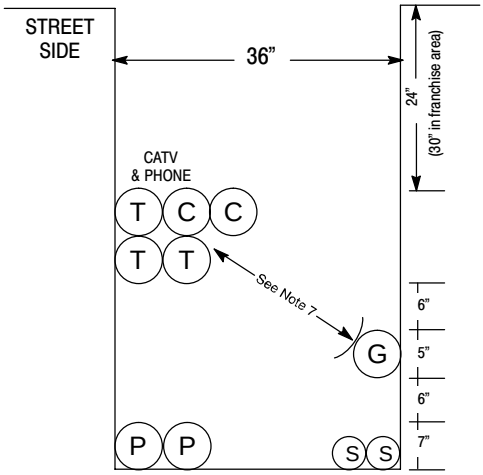

FIG. 3
36” Wide Joint Trench

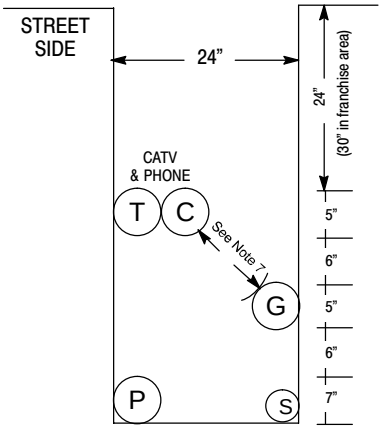

FIG. 4
24” Wide Joint Trench

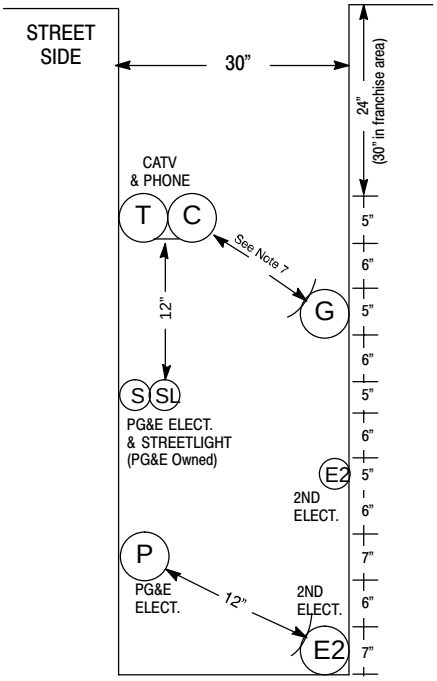

FIG. 5
Joint Trench With Second Electric Utility

Trench Configuration Notes

The trench configurations shown in this guide are to be considered “typical” only and that other trench widths, depths, as well as utility configurations (placement) may be used, provided all minimum requirements for separation, clearances, and cover are observed. In no case shall electric primary or secondary (excluding street lighting) be placed at a level higher than that of the gas and communications level. Gas shall be placed at the same level or below communications when gas is placed above the electric facilities.

Special Notes for Joint Trench With Second Electric Utility

A. Refer to Sheet 3 for General Notes.

B. A red 3-inch wide “PG&E Electric Line in Conduit” plastic marking tape, Code 375054, shall be installed, spiral wound in a manner that allows for the tape to be readily visible every 3 feet, with each conduit intended to be used for PG&E electric facilities. An equivalent red tape marked to identify the owner shall be installed with the conduit intended to be used for the second electric facility.

C. Each utility shall ensure adequate grounding between electric facilities is provided (See UO Standard S5453, “Joint Trench”).

D. Provide a minimum of 2 inches of compacted PG&E approved bedding material as a trench leveling concourse, where required. See General Notes Items 11 and 12 (on Page 3), in order to obtain proper compaction.

General Notes

1. The preferred trench location is in a Public Utility easement (P.U.E.).
2. All depths and resulting cover requirements are measured from final grade.
3. Cover, clearances, and separation shall be as great as practicable under the circumstances, but under no circumstances shall be less than the minimum cover, clearance, and separation requirements set forth in General Order 128 and 49CFR 192.321, 49CFR 192.325, and 49CFR 192.327. All facilities shall be anchored in place prior to compaction, or other means shall be taken to ensure no motion of the facilities. Dimensional requirements for shading, leveling, and backfilling shall be determined subsequent to compaction.
4. Trench dimensions shown are typical. Trench sizes and configurations may vary depending upon occupancy and/or field conditions. Trench size and configuration must at all times be constructed in a manner that ensures proper clearances and cover requirements are met. Any "change" to the trench width and configurations as shown in this exhibit must be designed to ensure this requirement.
5. It is preferred to have non-PG&E owned streetlights at a level other than the gas or electric level. Non-PG&E owned streetlights may be at the electric level of the trench as long as minimum clearances are provided and comply with all special notes for a joint trench with a second electric utility.
6. Non-Utility facilities are not allowed in any Joint Utility trench, e.g., irrigation control lines, building fire alarm systems, private telephone systems, outdoor electrical cable, etc.
7. When communication ducts are installed, a minimum of 12" radial separation shall be maintained from gas facilities. Exception: With mutual agreement, when 4-inch diameter or smaller gas pipe is installed, the separation may be reduced to not less than 6 inches.
8. Provide separation from trench wall and other facilities sufficient to ensure proper compaction.
9. Maintain proper separation between PG&E facilities and "wet" utility lines as described in UO Standard S5453. The minimum allowable horizontal separation between Company facilities and "wet" facilities is 3' with a minimum 1' of undisturbed earth or the installation of a suitable barrier between the facilities.
   If a 3' horizontal separation cannot be attained between "wet" utilities and Company dry facilities, a variance may be approved by the local Inspection Supervisor and submitted to the Service Planning Support Program Manager for approval. Separations of 1' or less are not permissible and will not be allowed. The Company may agree to waive the minimum 3' separation requirement at the request of an applicant if warranted and the need is justified. The request for a waiver must:
   - Be made in writing and submitted to the Company ADE during the planning and design phase of the project,
   - Clearly describe the conditions necessitating the waiver,
   - Include a proposed design,
   - And, include a design for a barrier between the "wet" utilities and Company dry facilities in the event 1' of undisturbed earth cannot be maintained.

   Note: Drain lines connected to downspouts on buildings are considered a "wet" utility for the purposes of this standard.
10. Separations shall be maintained at aboveground termination points.
11. Procedures for approving native backfill for shading of PG&E gas facilities:
    - Random soil samples shall be taken from a minimum of 3 locations per 1,000' of trench. 100% of the sample must pass through a 1/2" sieve and 75% must pass through a #4 screen. Additional samples must be taken if existing soil conditions change and are to be taken at the discretion of the PG&E representative on site.
    - The soils must not contain any rocks that have sharp edges or that may otherwise be abrasive.
    - The soils must not contain clods larger than 1/2" if to be used as shading, bedding, or leveling materials.
    - Compaction requirements must meet any applicable PG&E, Federal, State, County, or local requirements.
    - At no time shall the over saturation of native soils be used to achieve these requirements.

    The sieves and screens shall be:
    - 1/2" Sieve: 8" diameter by 2" deep, stainless steel mesh screen.
    - #4 Screen: 8" diameter by 2" deep, stainless steel mesh screen.

Notes continued on the next page

General Notes, continued

12. Procedures for approving native backfill for shading at PG&E electric facilities:
    - Random soil samples shall be taken from a minimum of 3 locations per 1,000' of trench. Additional samples must be taken if existing soil conditions change and are to be taken at the discretion of the PG&E representative on site.
    - Shading material containing large rock, paving material, cinders, sharply angular substances, or corrosive material shall not be placed in the trench where such material may damage the conduits and/or prevent proper compaction over or around the conduits.
    - Native soils containing clods not to exceed 6" in diameter may be included in the shading material provided the clods are readily breakable by hand.

      Note: Soils consisting primarily of adobe, hard compact (dense) clay, and bay muds shall not be used as shading material.
    - At no time shall the over saturation of native soils be used to achieve these requirements.
    - Refer to Engineering Document 062288, Item 13 on Page 2.
13. Competent native soils are preferred to be used for shading, bedding, and backfilling throughout the trench.
    - Where native soils exceed 1/2" minus and/or where gas is to be placed at the bottom of a trench in areas that exceed 1/2" minus soil conditions, or where the bottom of a trench is considered to consist of hard pan, PG&E approved 1/2" minus import material shall be used for shading and/or bedding of gas facilities.
    - PG&E approved import material is per CGT Engineering Guideline 4123.
    - If a leveling course is required for gas facilities, the use of native soils is preferred, but if 1/2" minus conditions are not attainable with the native soils, then the use of PG&E approved import materials is required. Bedding under gas facilities will be a minimum of 2" of compacted 1/2" minus native soils or PG&E approved import material.
    - For electric facilities, refer to Note 12. This applies to leveling courses as well as shading.
    - The minimum PG&E approved bedding material may be increased at the discretion of PG&E when warranted by existing field conditions (e.g., rocky soils, hard pan, etc.).
    - The use of any imported material for backfilling purposes shall be limited to those situations when native soils do not allow for required compaction.
14. The applicant is responsible for the removal of excess spoil and associated costs.
15. Separation between gas facilities and electric facilities may be reduced to 6" when crossing.
16. Service saddles are the preferred service fittings for use throughout the joint trench project. All projects will be designed and estimated using service saddles. However, service tees may be used if all clearances, separation, and coverage requirements are maintained.

Revision Notes

1. Revised Note 9 to clarify the minimum allowable horizontal separations requirements.
2. This document was revised on 09-27-2006.

Gas Transmission & Distribution, Gas Engineering

BACKFILL SAND

Engineering Material Specification No. 4123

Date of Specific Issue: August 30, 2012

Supersedes Engineering Guideline 4123, Dated May 1, 1999
and Engineering Standard Specification No. 90, Dated Jan 1, 1982

Approved By: Tim Scheele, P.E., Gas Pipeline Engineer
Matteo Rossi, Gas Engineer

1.0 PURPOSE AND SCOPE

This specification covers the requirements for imported sand used in bedding and backfill in trenches for electric cable, electric conduit, and gas pipe where the minimum 95% dry-in-place density, as determined by ASTM D-1557 or equivalent, is required.

2.0 INTERPRETATION

All questions that may arise concerning interpretation of this specification or acceptability of materials furnished and delivered to PG&E under this specification must be resolved in a manner agreeable with PG&E's Gas Transmission & Distribution, Gas Engineering departments.

3.0 APPLICABLE STANDARDS

Sand shall be free of constituents that could cause adverse environmental impact. Used blasting abrasives containing toxic constituents at or above State or Federal hazardous waste levels shall not be used as backfill material. Backfill material shall consist of natural sand, manufactured sand, existing native material, or combinations thereof, and shall conform to the physical properties listed below:

3.1 **Organic Impurities - ASTM C-40**
Supernatant shall not be darker than Plate 3 when compared to standard Gardiner Color Series.

3.2 **Sand Equivalent - ASTM D-2419**
Equal to or greater than 20.

3.3 **pH value - ASTM G-51-77**
Equal to or greater than 4.5 and less than 9.

3.4 **Resistivity R - ASTM G-57**
Equal to or greater than 5,000 Ohms-cm.

If Resistivity R is *smaller* than 5,000 Ohms-cm, the following chemical contents limits shall apply:

- Total chloride content shall be equal to or less than 500 parts per million as determined by EPA Method 300.0 prepared by Parr O_2 bomb combustion.
- Total sulfate content shall be equal to or less than 150 parts per million as determined by EPA Method 300.0 prepared by Parr O_2 bomb combustion.

3.5 **Compaction - ASTM D-1557**
When material is compacted to a relative compaction of 95% or greater, as determined by ASTM D-1557, the material shall not slough when cross trenched.

3.0 APPLICABLE STANDARDS, continued

3.6 Gradation - ASTM C-136 & ASTM C-117

Sieve Size	Percent Passing (By Weight)
½"	100
No. 4	75-100 [1]
No. 50	0 - 70
No. 100	0 - 30
No. 200	0 - 15

[1] For grains retained on No. 4 sieve, the grain shape shall be rounded or sub-rounded as defined by ASTM D-2488.

3.7 Coefficient of Uniformity, $C_U \geq 2.5$

$C_U = D_{60} / D_{10}$

D_n = Diameter of grain size which n % of the total sample is passing

3.8 Standard Specifications

ASTM C-40 ..... Test for Organic Impurities in Fine Aggregates for Concrete

ASTM D-2419 ..... Test for Sand Equivalent Value of Soil and Fine Aggregate

ASTM G-51-77..... pH of Soil for Use in Corrosion Testing

ASTM G-57 ..... Soil Resistivity Field Measurement Using Wenner Four Electrode Technique

EPA Method 300.0.. Determination of Inorganic Anions in Water by Iron Chromatography

ASTM D-1557 ..... Test Methods for Moisture-Density Relations of Soils and Soil-Aggregate, Mixtures Using 10-lb. Rammer and 18-in Drop

ASTM C-136 ..... Sieve Analysis of Fine and Coarse Aggregate

ASTM C-117 ..... Test for material Finer than No. 200 Sieve by washing

ASTM D-2488 ..... Practice for Description and Identification of Soils (Visual-Manual Procedure)

ASTM D-75 ..... Practice for Sampling Aggregate

4.0 TESTING

4.1 Supplier shall submit samples of Backfill Sand from each source for testing at an independent lab in accordance with all listed specifications. The lab results must be signed by a Registered Civil Engineer. Supplier shall provide certified tests reports to PG&E on request.

4.2 Sand sampling shall follow ASTM D-75.

- The minimum sample size that will be accepted for testing is 100 pounds.
- Each sample shall be representative of the material from a single source.
- Each sample shall be marked with a unique identifier and the location where it was procured.

4.0 TESTING, continued

4.3 Supplier shall obtain new test results when there is a change in the original approved source.

4.4 PG&E reserves the right to procure samples from the source for internal testing at any time.

Technical Requirements for Electric Service Interconnection at Primary Distribution Voltages

SUMMARY

This bulletin specifies the technical requirements for all customers requesting electric service at one of Pacific Gas and Electric Company's (PG&E) primary distribution voltages as defined in Rule 2. It is intended to give the customer a clear understanding of what their responsibilities are to receive Primary Service (PS) and those of PG&E. PG&E has developed these technical requirements in order to provide safe and reliable service to all the customers the Company serves.

If the PS customer also intends to install generation, then also refer to the information and requirements described in the *Distribution Interconnection Handbook*.

AFFECTED DOCUMENT

None

TARGET AUDIENCE

All utility employees working with primary service design and installation.

WHAT YOU NEED TO KNOW

1 General Requirements

Customers meeting the Rule 2 requirements for PS shall install, own and operate their distribution system beyond their Point of Service (POS). While there are a number of technical requirements associated with a PS, two requirements are particularly important:

- PG&E must approve the POS.
- PG&E must approve the protection scheme that the customer installs, owns and operates at the POS.

Satisfying these requirements assists PG&E in providing safe and reliable service to other customers connected to the Company's system. Customers considering a PS should contact PG&E early in the design process.

2 Primary Service Arrangements

PG&E prefers that the POS, protective device and revenue meter for a PS be at or near the property line nearest to PG&E's primary distribution. The PG&E-approved and customer installed primary protection must be at the POS to protect other PG&E customers from outages due to faults on customer facilities. The revenue-metering should also be at this point because the PS customer is responsible for the line losses on their primary conductor and transformer(s) as well as their load. However, unlike the requirement for the protective device, it is not an absolute requirement.

 ©2016 Pacific Gas and Electric Company. All rights reserved.

Technical Requirements for Electric Service Interconnection at Primary Distribution Voltages

The sections below explain the primary protection requirements and revenue-metering location requirements for PG&E's preferred PS arrangements. Please note that non-preferred service arrangement proposals may take longer to approve and involve additional cost for the customer.

2.1 Preferred PS Arrangements

PG&E's preferred PS arrangements are either: a) when the PS customer's primary distribution line is underground (UG) and the POS is less than 500 feet from the property line, or b) when the PS customer's primary distribution line is overhead (OH) and the protective device pole (if separate from the POS pole) is less than 50 feet from the property line.

1. UG Conductor and POS < 500 Feet

   If the PS customer's primary line is underground and the POS is 500 feet or less from the property line, refer to Figure A3-1 and Figure A3-2. The following requirements apply:

   a. The PS customer must provide a PG&E approved enclosure for PG&E's revenue-metering equipment. See Section 9 (Page 10) for detailed revenue-metering requirements.

   b. The PS customer must install primary protection at the POS. This protection may consist of a circuit breaker with phase and ground relays or, depending on the customer's load, fuses may suffice. If PG&E determines that fuses will not coordinate with PG&E's source-side protection, then the customer must use a circuit breaker. See Section 4 (Page 4) for circuit breaker and fuse requirements.

   c. The PS customer must install conduit from the POS to PG&E's box (if UG) or pole (if OH).

   d. PG&E will pull one continuous run of cable and connect to the customer's POS termination facility, not to exceed 500 feet (subject to an acceptable number of bends in the conduit).

2. OH Conductor

   If the PS customer's primary line is overhead, then the first pole at the customer's property line is the POS. Refer to Figure A3-3. The following requirements apply:

   a. PG&E will install pole-top revenue-metering on the first pole on the PS customer's property. See Engineering Standard 058779 for pole-top revenue-metering requirements.

©2016 Pacific Gas and Electric Company. All rights reserved.

b. The PS customer must install primary protection on the second pole on their property, not to exceed 50 feet from the revenue metering pole. This protection may consist of a recloser or, depending on the customer's load, fuses may suffice. If PG&E determines that fuses will not coordinate with PG&E's source-side protection, then the customer must use a recloser. See Section 4 (Page 4) for recloser requirements.

c. PG&E will interconnect its system with the customer's system at the revenue-metering pole.

2.2 Non-Preferred PS Arrangement Proposals

PS customers may propose a non-preferred PS arrangement. This typically occurs when the PS customer's primary distribution line is UG and the proposed location for the primary switchgear is greater than 500 feet from the property line. PG&E will consider such proposals, however, non-preferred service arrangement proposals may take longer to design, approve and can involve additional customer expense. Customers should contact PG&E early in the design process if they are considering a non-preferred PS arrangement.

A non-preferred PS arrangement may consist of: a) a splice box with an underground interrupter or subsurface fuse within 500 feet of the property line, or b) padmounted switchgear within 500 feet of the property line that includes a protective device such as a breaker or fuses. In these cases, the substructures and equipment are installed and owned by the customer. As with preferred arrangements, PG&E must approve the location, substructure/equipment arrangement and protective devices. In addition, note that the following requirements still apply:

1. The PS customer must provide space for PG&E's revenue-metering in their switchgear. See Section 10 (Page 12) for detailed metering requirements.

2. The PS customer must install conduit from the POS to PG&E's box (if UG) or pole (if OH).

3. PG&E will pull one continuous run of cable, not to exceed 500 feet, to the POS (subject to an acceptable number of bends in the conduit).

2.3 Location of Revenue-Metering

The preferred revenue meter location is at the POS. High-side metering is PG&E's preferred metering configuration. If PG&E approves low-side metering, a 2% adjustment factor will be applied at each stage of the transformation before the meter. See Section 9 (Page 10) for additional revenue-metering requirements.

2.4 Service Wire Configuration

If the PG&E point of service is at a protective device and not at the customer owned switchgear the wiring configuration, 3-wire or 4-wire, of the customer's service from the protective device to the switchgear must be the same as PG&E's.

©2016 Pacific Gas and Electric Company. All rights reserved.

3 General Protection Requirements

It is important to minimize the potential hazard to life and property when interconnecting facilities to the PG&E distribution system. This requires the automatic detection of abnormal conditions and trouble related to a PS customer's equipment and the isolation of the condition and/or equipment within a reasonable time.

As a general rule, neither party should depend on the other for system protection. As such, PG&E's minimum protection requirements are designed and intended to protect the PG&E power system only. Moreover, the interconnection of a PS customer to the PG&E distribution system must not degrade existing PG&E protection and control schemes or interfere with the service of other customers (see Rule 2).

The PS customer's facilities must isolate any fault or abnormality that could adversely affect the PG&E electric system or the electric systems of other entities connected to the PG&E electric system.

PG&E assumes no liability for damage to the PS customer-owned facilities resulting from a lack of adequate coordination between the PS customer's protective device(s) and PG&E's protective devices, or negligence due to the PS customer's failure to maintain protective and/or isolation equipment.

PG&E recommends that the PS customer acquire the services of a qualified and licensed electrical engineer to review its plans. The PS customer must, at its expense, install, operate, and maintain system protection facilities in accordance with all applicable regulatory rules and requirements, and in accordance with this bulletin.

3.1 Data the PS Customer Provides to PG&E

1. The PS customer must provide the information necessary for PG&E to determine the interconnection requirements before PG&E approves the specific PS installation. This information includes, but is not limited to, the following:

    a. Single-Line diagrams.

    b. Meter and Relay diagrams.

    c. Three-Line diagrams of required protective device.

    d. Control diagrams including direct current (dc) tripping circuit.

    e. Proposed relay specifications and settings.

    f. Relay manufacturer, model, style, type, ranges, settings, and a copy of the relay instruction manual.

©2016 Pacific Gas and Electric Company. All rights reserved.

g. Projected electrical demand (i.e., kilowatt [kW]), including the following information:

(1) Power factor

(2) Load factor

(3) Large motor sizes

(4) Motor starting currents

(5) Customer's transformer size

(6) Estimated breakdown of the electric energy use (i.e., kilowatt hours [kwh]) by month

h. Full-size phase and ground coordination curves showing full coordination with PG&E's system.

i. A registered electrical engineer must prepare and stamp the fault–study results.

j. Maintenance program documentation for PG&E-required switches, interrupting devices, and protective equipment.

2. PG&E strongly recommends that the PS customer, or their representative, provide the above information before ordering equipment and finalizing the design.

3. Also, before energizing the new PS facility, the PS customer must also provide a copy of the on-site test reports for the switches, devices, and relays at least 30 working days before energizing the service. This allows sufficient time for review, modification, and final PG&E approval. Qualified personnel must prepare these on-site test reports. Refer to Section "Equipment Test Requirements," and Section "Pre-Energizing Test" for further details.

3.2 Data that PG&E Provides to the Applicant

PG&E provides the following engineering data to the PS customer:

1. System fault-duty at the property line.

2. Settings for PG&E source-side protective devices and the required clearance time to comply with PG&E protection standards.

3. Relay curves for PG&E source-side protective devices, if requested by the PS customer.

©2016 Pacific Gas and Electric Company. All rights reserved.

4 Specific Protection Requirements

PG&E must review and approve the fault-interrupting devices that the PS customer selects. There are four basic types of fault-interrupting devices available for distribution systems:

- Circuit breakers
- Reclosers and Interrupters
- Fuses

The following sections provide specific requirements for each of these devices.

4.1 Circuit Breaker Requirements

The interconnecting circuit breaker must have sufficient capacity to interrupt the maximum available fault current at its location. Phase and ground relays approved by PG&E (see Table 1, PG&E Approved Relays, on Page 7) must be used to trip the circuit breaker for phase and ground faults. These relays must coordinate with PG&E's source-side protection. It must also include the following features:

1. Shunt-trip via a trip signal supplied through a battery external to the circuit breaker.
2. Lock out if operated by protective relays required for interconnection.
3. Capacitive tripping is unacceptable.
4. Relay Requirements
   a. PG&E requires PS customers to install phase and ground over-current relays that trip the interrupting device at the POS. These relays must detect all phase and ground faults, and coordinate with PG&E's source side protection. All required relays must include relay targets, and have "manual reset" capability.
   b. The PS customer must either: a) select phase and ground relays approved by PG&E or, b) have an International Electric Testing Association certified testing company test the relay as outlined in Attachment and provide the test results to PG&E for approval.
   c. PG&E strongly recommends that PS customers submit all relay specification and setting proposals for PG&E approval before finalizing the design and ordering equipment. PS customers not submitting this information risk delaying their projects.

©2016 Pacific Gas and Electric Company. All rights reserved.

Table 1 PG&E Approved Relays
See Tables G2-4 and G2-5 located in the Transmission Interconnection Handbook, Section G2, "Protection and Control Requirements." These tables list all of the types of relays approved for the PG&E distribution and transmission systems.

NOTE
PG&E's approval of the relays does not indicate the quality or reliability of a product or service. No endorsements or warranties are implied.

5. Relay Redundancy Requirement

   The PS customer's protection system must contain redundancy such that the failure of any one component will still allow the customer's system to isolate the PS facility from the PG&E system under a fault condition. Three single-phase over-current relays and a ground over-current relay, or two three-phase over-current relays and a ground over-current relay satisfy the redundancy requirement. PS facilities, using microprocessor-based relays as a multifunctional protective device, must have backup relays.

6. Power Supply Requirements

   Power supplies for PG&E-required relays and the tripping circuitry for the fault-interrupting device must be supplied from a battery and charger system. The system must include a dc under-voltage detection and alarm feature. Fuses are not allowed in the dc trip circuitry (dc breakers are acceptable).

   The preferred battery type is flooded lead-acid (calcium, antimony) or nickel-cadmium (NiCd). Sealed batteries (Valve Regulated Lead Acid [VRLA]) are allowed if they meet PG&E requirements. An uninterruptible power supply (UPS) is unacceptable. See Section 11,"Battery Requirements for Interconnecting to the PG&E System," on Page 18, for more details on PG&E's battery requirements.

4.2 Reclosers and Interrupters

Contact PG&E for approved reclosers and interrupters.

4.3 Fuse Requirements

1. Fuses are single-phase, direct-acting, sacrificial links that melt to interrupt fault current and protect the equipment.

©2016 Pacific Gas and Electric Company. All rights reserved.

2. PG&E may approve the use of fuses as the fault interrupting device at the POS for load-only facilities (i.e., no generation is interconnected), if the fuses coordinate with the PG&E source-side devices for both phase and ground faults. Large primary fuses that do not coordinate with PG&E's source-side protective phase and ground relays are not allowed. These fuses may cause other customers on the circuit to lose power due to a fault inside the PS customer's facility.

3. The PS customer must replace the blown fuses manually after each fault before the facility can return to service. Only trained, qualified personnel should replace the primary fuses.

4. If PG&E approves the fuses, the PS customer should consider installing a negative-sequence relay and/or other devices to protect its facility against single-phase conditions (however, this is not a requirement). The PS customer is responsible for protecting their equipment against single phase conditions, if they determine or feel that it is needed.

5. Customers must keep a full set of replacement fuses (PG&E must approve the size and type) onsite.

5 Equipment Test Requirements

The tests in this section apply only to the PG&E-required equipment at the POS; specifically, the breaker, the relays, and the tripping circuitry.

The customer must complete the following requirements:

- The equipment must pass all the tests described below.
- The customer must submit two copies of the test reports to PG&E a minimum of 30 working days before energizing the PS facilities.
- Each test report must identify the equipment tested and that identification must match that in the single-line or three-line diagrams.

The customer must meet the above requirements and obtain PG&E approval of the test reports at least ten working days before PG&E energizes the PS. PG&E strongly recommends that the PS customer coordinate the test program with PG&E.

5.1 Circuit Breaker Tests

The PS customer must perform the following circuit breaker tests:

1. Minimum-to-trip test at 70% or less of the nominal control voltage on all circuit breakers operated by PG&E-required relays.

2. Micro-ohm test on the main circuit breaker(s) at the POS.

©2016 Pacific Gas and Electric Company. All rights reserved.

3. Timing test showing the time from the trip initiation to the opening of the main poles. Proving insulation tests, as described below.

4. Proving Insulation

   A 1,000 or 2,500 volt (V) dc megger test, or a 1,000 V high-pot test is acceptable for the insulation tests described below.

   a. Megger circuit breaker(s) at the POS operated by PG&E require relays (see Table 2 below).

Table 2. Circuit Breaker Positions and Connections

Circuit Breaker Position	Connection
Circuit breaker open.	Each pole to ground, pole 1 to 2, pole 3 to 4, pole 5 to 6
Circuit breaker closed.	Pole 1–ground, pole 3–ground, pole 5–ground
If the poles are in a common tank or cell.	Pole 1 to 3, pole 3 to 5, pole 5 to 1

   b. Megger (phase-to-phase and phase-to-ground) all buses from the POS to the main breaker or fuses.

   c. The main circuit breaker(s) must have a dielectric test performed on the insulating medium (gas or oil). This test is not required for factory-sealed, circuit-switcher interrupters.

5.2 Tests for Current Transformers and Current Circuits

PS customers must perform the following tests for current transformers (CTs) and current circuits associated with PG&E-required relays:

1. Check the saturation on all CTs. If this is not possible, a manufacturer's curve is acceptable.

2. Prove the ratio of all CTs by using current (primary to secondary) or voltage (secondary to primary).

3. Check the CTs for the proper polarity.

4. Check the CT circuits for the proper connections.

5. Check the continuity of the CTs by:

   a. Applying primary or secondary current at the CT block.

©2016 Pacific Gas and Electric Company. All rights reserved.

b. Verifying that the proper current exists in each phase relay and the ground relay.

Customers must perform each test (primary or secondary) in all combinations prove that all phase relays and ground relays have proper connections.

PS customers must also ensure that no loose wiring or parallel current paths exist, by applying or injecting the current to achieve a secondary reading of 5 amperes (A) in each relay.

Check each phase of each current circuit feeding PG&E–required relays. Megger the total circuit with the ground wire lifted (to prove that only one ground exists).

5.3 Relay and Fuse Tests

The testing requirements for relays/fuses include:

1. PS customers must field test the settings of PG&E-required relays to verify the following items:

   a. The minimum operating point at which the relay picks up (minimum pickup).

   b. Time delays at three different current-test points, in integral multiples of the minimum pickup that closely characterize the relay time-current curve.

   c. Test results must be within the tolerances listed below:

      (1) Current/Voltage/Time ± 10 %

      (2) Impedance/Phase Angle ± 0.05 %

      (3) Frequency ± 0.05 Hz

2. Check all fuses for continuity before energizing.

5.4 Tests Recommended (But Not Required by PG&E) for the PS Customers

1. Transformer

   It is recommend (but not required by PG&E) that the customer perform the following tests to prove the insulation and turns ratio on their primary service transformers.

   a. Proving Insulation

      A 1,000 or 2,500 volt (V) dc megger test or a 1,000 V, high-pot test is recommended for any of the insulation tests below.

      (1) Megger the main transformer(s) winding-to-winding and each winding-to-ground.

©2016 Pacific Gas and Electric Company. All rights reserved.

(2) Megger the buses (phase-to-phase and phase-to-ground) from the POS to the main transformer.

(3) Perform a dielectric test on the main transformer(s) insulating medium (gas or oil).

b. Proving Ratios

Prove the main transformer(s) ratio(s) using one of the following methods:

(1) Turns-ratio tester.

(2) Voltage-ratio test on the final operating tap. Consult with PG&E to best match the present distribution-system voltage.

6 Pre-Energizing Test

6.1 Customers must meet the following requirements before PG&E will energize the PS:

1. Ensure that any inspections required by local governmental and regulatory agencies are complete and any applicable permits are obtained before PG&E energizes the PS.

2. A PG&E technical representative must witness trip checks of all PG&E-required relays. This may require injecting a signal to trigger the relay. This proves that the relay will handle the trip current of the circuit breaker. It also proves relay targeting. Jumpering the studs on the back of the relay is not acceptable.

   a. The Primary Service Entity shall provide all test equipment and qualified 3rd party personnel to perform the required tests. PG&E recommends third party testers to be National Electrical Testing Association (NETA) certified. PG&E shall be there strictly as an observer. Form PS-1 shall be completed by the PG&E representative on site at the time of the pre- energizing test.

3. A PG&E technical representative must verify grounds are bonded per standard (switching platforms, fences, buildings, etc.) and verify signage is correct per the below requirement. All signs shall be constructed to be weather proof.

   a. Disconnect -- The disconnect sign shall have 1 inch wide by 2 inch high, with colors venetian red (#3) lettering on a buff (#1) background (or similar). It shall be attached as shown on Engineering Design Standard 454092 (see Appendix D). If the facility has multiple feeds with multiple separate disconnect switches, then each disconnect requires a separate sign.

©2016 Pacific Gas and Electric Company. All rights reserved.

b. Location -- The location sign shall have 1 inch high venetian red (#3) lettering on a buff (#1) background. PG&E's standard location sign size is 14 inches wide by 7 inches high overall. It shall be posted at each entrance to the facility. If there are other gates or doors to go through, then each one of those shall have a sign as well. For example: One posted at the entrance to the primary service facility and one posted on the entrance to the substation within the primary service facility.

4. After energizing the PS and adding load, a PG&E technical representative must witness the reading of the load current in each phase relay and the absence of load current in the ground relay. The PG&E technical representative will then seal the relays.

5. The PS customer is responsible for providing all test equipment, and qualified personnel to conduct the tests in the presence of a PG&E technical representative.

7 General Notes

- The PG&E system has an A-C-B counterclockwise rotation.
- Before making changes to PG&E-required protection equipment, the customer must submit the proposed changes to PG&E for review and approval.
- The customer is responsible for maintaining PG&E-required protection equipment in accordance with PG&E maintenance and test practices. After completing such tests, the customer must submit maintenance and test report documentation to PG&E for review and approval. A PG&E technical representative will reseal PG&E-required relays following setting changes and routine maintenance.
- Contact the local PG&E representative with any questions.

8 Alternate Source

8.1 A PS customer may request an alternate primary voltage source installed at customer expense. Requests for an alternate source are handled on a case-by-case basis. This section describes some of the technical requirements associated with installing and operating a PS with an alternate source. Technical requirements may change depending on location and a variety of other factors. PG&E strongly recommends that customers contact the Company early in the design phase to ensure a successful project. The PS customer and PG&E must work together to ensure that an alternate source system fulfills the customer's needs while not degrading PG&E protection schemes, operating flexibility or cause interference with another customer's service.

8.2 When a PS load is transferred from the primary source to the alternate source or vice versa, a momentary outage ("drop-and-pickup" operation) occurs.

©2016 Pacific Gas and Electric Company. All rights reserved.

8.3 When the PS is fed from the alternate source and the PS customer wants to transfer back to the primary source with a parallel operation ("make-before-break" method), the PS customer must meet the following requirements:

1. The ratios and electrical connections of the transformers on both sources must be well matched to minimize circulating currents.

2. The impedance of the transformers and the relative phase angles of the sources must be such that any "through load" (i.e., flowing of power through the PS customer's electrical system to other customers) does not cause overloads.

3. The parallel transfer operation must not degrade protection, inhibit PG&E's operating flexibility, or overstress equipment (customer or PG&E equipment).

4. The transfer switches, one on each side of the PS load, require an automatic interlock control scheme to minimize the time the two systems are paralleled. The transfer switches must be circuit breakers or other suitably rated, automatically controlled switches.

NOTE

The parallel period must be less than one second because the presence of two parallel circuits will increase the fault duty and may overstress the PS customer's equipment.

5. In some cases, PG&E may require additional protective devices and/or special operating procedures to ensure safe and reliable service for the PS customer and other PG&E customers.

6. Each parallel transfer operation can only proceed after PG&E's specific approval. The PS customer must obtain PG&E's approval before performing the parallel transfer operation. PG&E may withhold approval if, in its sole judgment, the above requirements have not been met, or if a previously unforeseen factor or change in conditions is deemed to jeopardize the operator, public safety, or reliability to customers.

7. The PS customer must assume all liability for any problems or damage resulting from any parallel transfer operation.

9 Revenue-metering Requirements

This section addresses direct access (DA) and bundled–service PS customers connected at distribution voltages (34.5 kV and below), as described in Rule 2. Customers must satisfy PG&E's revenue–metering requirements and those of other applicable governing authorities (i.e., California Public Utilities Commission [CPUC], California Independent System Operator [CAISO], etc.).

For customers exporting power, loads connected at distribution voltages must satisfy the metering protocols established by PG&E and CAISO. Exceptions are handled on a case-by–

©2016 Pacific Gas and Electric Company. All rights reserved.

case basis with approval from PG&E's Customer Metering Services in close coordination with Field Metering Services.

Other arrangements that affect the required metering installation may also require a "Generation Special Facilities Agreement."

There are two types of distribution services:

- Wholesale
- Retail (i.e., end–users)

9.1 Wholesale Service

1. For wholesale-service interconnections, the PS customers must provide, install, own, and maintain all revenue-metering-related equipment, including all the items provided and maintained by PG&E or a Meter Service Provider (MSP) listed under "Retail Service" below.

2. PS customers requesting wholesale service must meet the following criteria:

   a. CAISO metering standards

   b. CPUC-approved metering standards

   c. PG&E's requirements

   d. Enter into a Meter Service Agreement (MSA) with the CAISO and, in certain cases, with PG&E. The MSA specifies requirements regarding the retrieval of load data and accessibility by CAISO.

3. The wholesale PS customer is responsible for ensuring that the meters comply with CAISO's meter standards and accuracy requirements.

4. All PS customers must contact PG&E's local account services representative for PG&E's revenue–metering requirements.

9.2 Retail Service (End Users)

Electric Rule 22 "Direct Access" governs the interconnection and operating requirements for DA customers. Please use the following link to access the document, http://www.pge.com/tariffs/tm2/pdf/ELEC_RULES_22.pdf.

1. Customer Service Elections

   According to Rule 22, customers have the opportunity to acquire their electric power needs under the following two options:

   a. Bundled Utility Services – traditional service from PG&E

©2016 Pacific Gas and Electric Company. All rights reserved.

(1) Bundled Services

For bundled (full-service) utility services, PG&E, in most cases, continues to provide the following services:

- Own, provide, and maintain metering equipment, including the meter
- Meter reading

Customers returning to bundled service may own the meter, if the meter is supported by PG&E. In the event that the customer's meter becomes nonfunctional, PG&E will replace the meter with an equivalent meter and return the former meter to the customer (end-user).

b. DA – customers purchase energy from various suppliers and related services from Energy Service Providers (ESPs)

2. Customer Meter Options

Customer metering options include:

a. DA customers, PG&E, or the ESP may own the hourly meter.

b. The ESP may act as its own MSP or hire an MSP to maintain metering equipment compliance.

c. The ESP may also act as its own Meter Data Management Agent (MDMA) or hire an MDMA to read the meter and maintain the meter data.

d. Contracting with PG&E to perform metering services or meter-data management.

e. PG&E retains the right to physically access any hourly or monthly meter data.

f. PG&E continues to read, test, and inspect the meters on PG&E's system.

3. PG&E Is The MSP

PG&E, as the MSP, continues to provide, install, maintain, and test the following:

a. Revenue-metering instrument transformers (voltage transformers and current transformers), which are considered part of the distribution system per CPUC decision D.97-10-087, dated October 30, 1997. PG&E Engineering Document 058779, "Pole Top Primary Metering Installation, Cluster Mounted (12 or 21 kV Line)," shows a typical, distribution, pole-type metering.

©2016 Pacific Gas and Electric Company. All rights reserved.

b. Secondary wiring from the base of the metering transformers to the revenue meter in a customer-supplied dedicated raceway (conduits) used solely for revenue-metering.

c. Meters and associated metering devices such as isolation relays, test switches, etc.

4. PG&E Is the MDMA

PG&E, as the MDMA, continues to provide the following services:

a. Reading raw meter data from the interval meter.

b. Validating, editing, and estimating the data of a settlement-quality form.

c. Placing the settlement-quality data on the MDMA server and, if necessary, performing a usage adjustment.

5. Customer Responsibilities

The customer (end-user) maintains the following:

a. The Meter Enclosure

To maintain the required metering accuracy, the distance between the meter enclosure and the revenue-metering transformers must not exceed 50 feet.

PG&E must approve any variance from this general rule. The enclosure must be grounded and located within the substation ground grid. Access must be readily available for PG&E employees to read and maintain the metering equipment.

The enclosure must be equipped with the following items:

(1) Auxiliary 120 V duplex plug

(2) Overhead light

(3) Light switch adjacent to the door

(4) Ground bus connected to the ground and mounted near the bottom of the wall where the meters are located

Please refer to PG&E's *Electric and Gas Services Requirements* (*Greenbook*) and Engineering Document 058779, "Pole Top Primary Metering Installation, Cluster Mounted (12 or 21 kV Line)."

©2016 Pacific Gas and Electric Company. All rights reserved.

b. PG&E-Approved Meter Panels

Please refer to PG&E's *Electric and Gas Services Requirements* (http://www.pge.com/greenbook)

c. The Pull Lines

The customer must install a pull line in the conduit between the metering enclosure and the junction box at the base of the metering-unit support structure to facilitate the MSP's installation of the metering-unit secondary wires.

Only install the MSP's secondary revenue metering wires in the conduit between the meter enclosure and the PT/CT units. Conduits may be metallic or nonmetallic.

d. Telephone Lines into the Metering Enclosure

If a telephone line is required to read the meter, the customer may be responsible for installing the line into the metering enclosure and establishing telephone service. If a land-line is unavailable and cellular signal levels are acceptable, the use of a cellular telephone is acceptable.

If the meter's telephone line is not dedicated to the meter, the customer, with prior approval from PG&E's local metering group, may arrange to use a line-sharing switch.

The customer must ensure that the telephone line terminations in switchboards, panels, pole-mounted meters, and pedestals meet the following requirements:

(1) Located within five circuit-feet of the centerline of the meter.

(2) Located between a minimum of 18 inches and a maximum of 72 inches above the finished grade.

When cellular telephones are used, the same location requirements apply to the power supply, as measured from the load side of the meter. Locate the power supply outside PG&E's sealable section.

10 Communication Circuits

PG&E may require communications circuits between PG&E and the customer's PS facilities for the following purposes:

- Protection
- Revenue Metering

©2016 Pacific Gas and Electric Company. All rights reserved.

- Energy Management System (EMS)
- Supervisory Control and Data Acquisition (SCADA)
- Generation
- Voice communications

When external communication circuits are installed, the responsible party must ensure that the high-voltage protection (HVP) equipment on these circuits meets all applicable standards.

11 Battery Requirements for Interconnecting to the PG&E System

11.1 This section describes PG&E's process for ensuring safety and reliability of for customers who connect to Company systems. The recommendations made here will ensure that the system operates as designed.

11.2 Because of serious reliability, safety and reduced life concerns with sealed (also called Valve Regulated Lead Acid [VRLA]) batteries industry wide, PG&E has decided to completely stop the use of sealed batteries in our Substation or any switchgear installations or interconnection using these batteries. Flooded lead acid (calcium, antimony) and Nickel-Cadmium (NiCd) are the only batteries acceptable in these installations. Switchgear compartments typically see very high temperatures, and if sealed batteries are used they will dry out in less than a few years causing safety and reliability concerns along with not having the capability to trip breakers.

Refer to the side by side comparison of IEEE Standard 450-2002 Section 5.2.3 (IEEE Recommended Practice for Maintenance, Testing and Replacement of Vented lead acid batteries for Stationary applications –also referred as Flooded batteries) and IEEE Standard 1188-1996 Section 5.2.2 Subsections a, b & c.

11.3 IEEE Recommended Practice for Maintenance, Testing and Replacement of Valve-regulated batteries for Stationary application. Also referred as VRLA) clearly demonstrates that VRLA requires Quarterly ohmic resistance testing compare to yearly ohmic testing for flooded batteries. Experience industry wide indicates problem with doing ohmic tests on VRLA because of the design of battery and trying to make connections to the terminals and interconnecting hardware. Even if ohmic resistance reading is not done on flooded battery, the failure modes can be detected by other means whereas with VRLA eliminating this test could cause dryout condition and ultimately catastrophic failure. In hot environment VRLA would require charger compensation as well as monitoring which is expensive and still not proven to be adequate. In the telecommunication industry there are presently trials under way for system wide replacements of VRLA with Flooded or NiCd batteries. PG&E recommends use of NiCd batteries in switchgear cubicle because of better performance under extreme temperatures. Flooded batteries can also be used in switchgear.

©2016 Pacific Gas and Electric Company. All rights reserved.

11.4 Additional reasoning for not using VRLA in substation as pointed out by IEEE Battery working group Chairman in the recent paper published in IEEE. "Summarizing the issue for VRLA batteries, there is a considerable risk involved in installing a single VRLA string in a substation. If parallel strings are installed, to operate reliably, they must be redundant, either by design or by a sufficient degree of conservatism in the sizing calculation. In building in redundancy, however, the main aim of reducing battery costs is compromised. Despite the early claims of maintenance-free operation, VRLA batteries require considerable surveillance and testing to maintain a high degree of reliability, IEEE 1188-1996 [2] recommends quarterly internal ohmic measurements and annual discharge testing of VRLA. These measures are largely ignored by the telephone operating companies because of their low loads and use of parallel strings, as detailed above. In substation operation, however, these practices are doubly important because of the higher currents involved".

11.5 It is required for the third party customer to provide the following documentation to PG&E for review and acceptance by the Substation Engineering Department:

1. Type of Battery (Vented Lead Acid-VLA or NiCd). Monoblock (multiples cells in a jar) batteries from C & D, EnerSys or other vendors will be acceptable. Battery rack must be designed to withstand loading based on zone 4 or IEEE 693 (High Seismic).

2. Detail information of load including continuous and momentary. No minimum load requirement- Smallest flooded acid may be the limitation

3. Battery sizing calculation based on IEEE Standard 485-2010 (IEEE recommended Practice for Sizing Large Lead Storage Batteries for Generating Stations and Substations) or IEEE Standard 1115-2014 (IEEE recommended Practice for Sizing Nickel-Cadmium Batteries for Stationary application) and minimum 8 hours discharge rate using manufacturer software (to ensure proper discharge curve is used) using aging factor of 1.25 and design margin of 1.1 to be clearly shown on the calculation. Charger sizing calculation based on battery size with recharge time of 12 hours assuming charger will support the continuous load as well as recharges the battery at the same time.

4. When battery is installed proof of three (3) hour discharge testing to ensure battery has the capacity to support the load and trip; per IEEE Standard 450-2010 (Voltage measurements should be taken every 15 minutes throughout the testing).

5. Documentation showing what kind of maintenance will be done (Monthly, Quarterly, and Yearly etc).

6. Monitoring of minimum battery low voltage by separate voltage relay or through charger and provide critical alarm to scada or monitoring system.

©2016 Pacific Gas and Electric Company. All rights reserved.

12 Preferred Service Arrangement Figures

The following pages provide figures showing the preferred service arrangements for overhead and underground primary services.

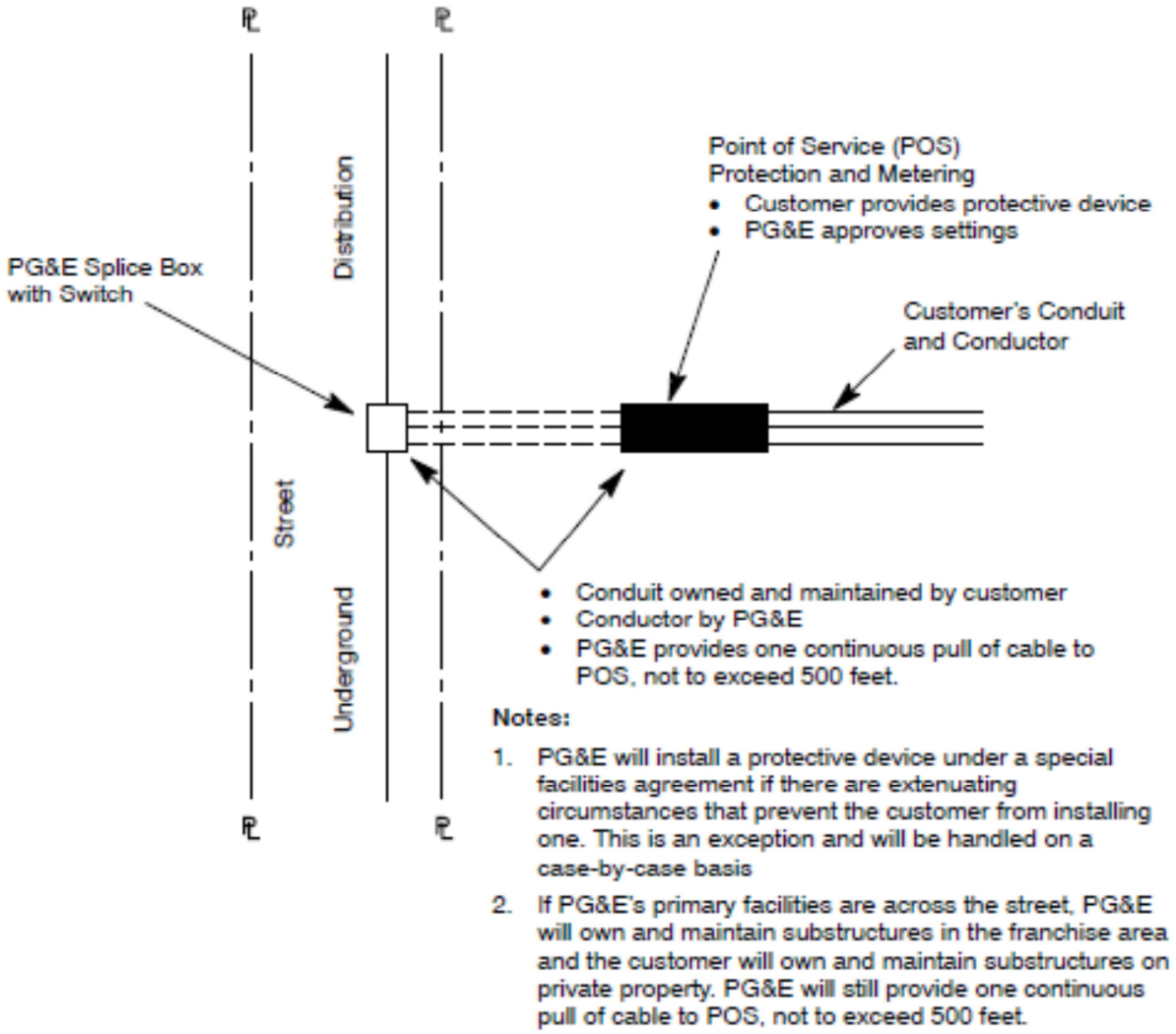

Notes:

1. PG&E will install a protective device under a special facilities agreement if there are extenuating circumstances that prevent the customer from installing one. This is an exception and will be handled on a case-by-case basis
2. If PG&E's primary facilities are across the street, PG&E will own and maintain substructures in the franchise area and the customer will own and maintain substructures on private property. PG&E will still provide one continuous pull of cable to POS, not to exceed 500 feet.

Figure A3-1
Underground Primary Service from Underground Distribution
Preferred Service Arrangement
POS ≤ 500 Feet From PG&E Splice Box

©2016 Pacific Gas and Electric Company. All rights reserved.

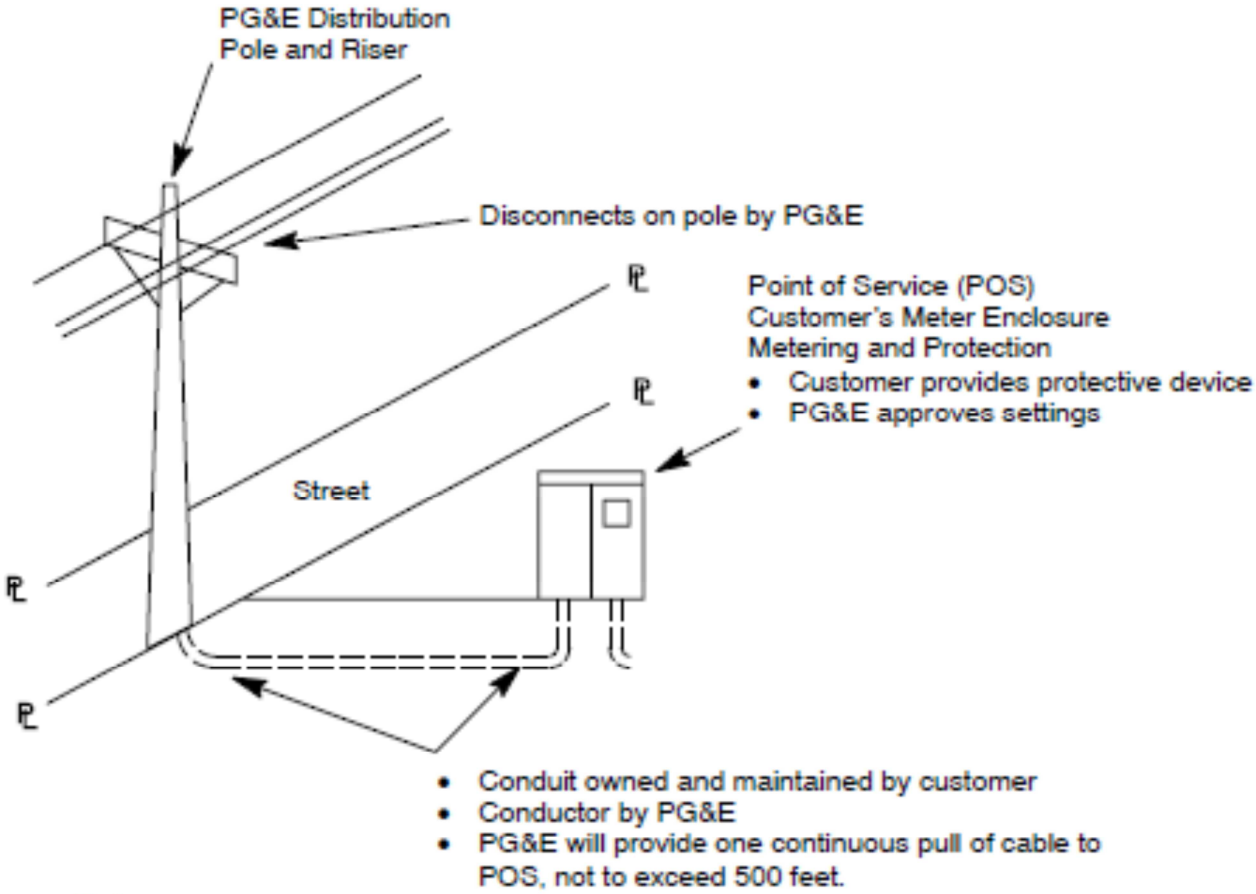

Notes:

1. PG&E will install a protective device under a special facilities agreement if there are extenuating circumstances that prevent the customer from installing one. This is an exception and will be handled on a case-by-case basis
2. If PG&E's primary facilities are across the street, PG&E will own and maintain substructures in the franchise area and the customer will own and maintain substructures on private property. PG&E will still provide one continuous pull of cable to POS, not to exceed 500 feet.

Figure A3-2
Underground Primary Service from Overhead Distribution
Preferred Service Arrangement
POS ≤ 500 Feet From PG&E Pole

©2016 Pacific Gas and Electric Company. All rights reserved.

Technical Requirements for Electric Service Interconnection at Primary Distribution Voltages

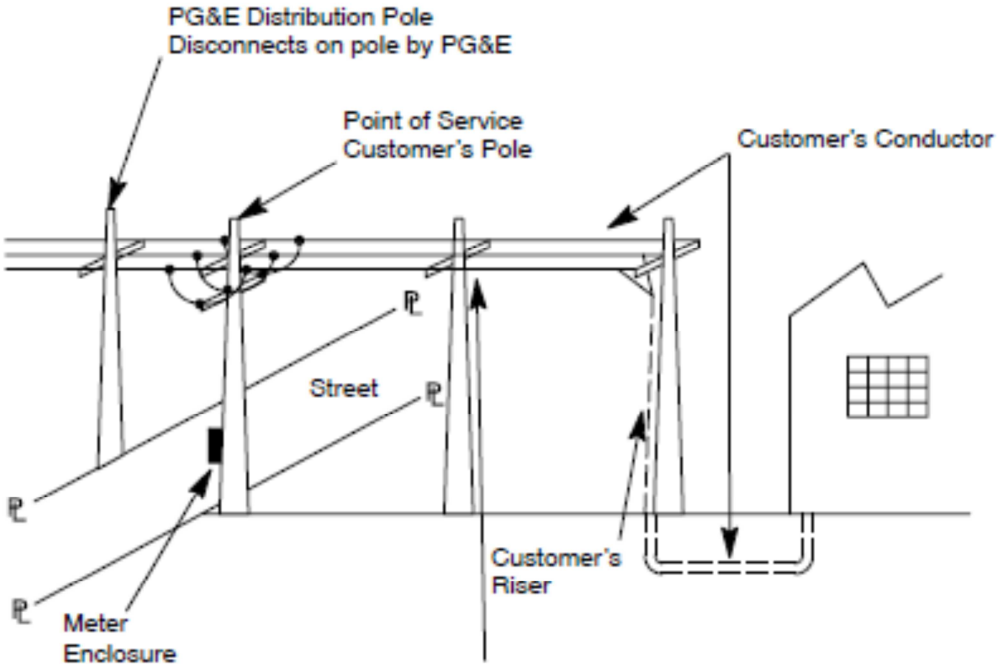

- Customer provides protective device.
- PG&E approves settings.
- Protective device pole must be as close as possible to metering pole, not to exceed 50 feet.

Note:

PG&E will install a protective device under a special facilities agreement if there are extenuating circumstances that prevent the customer from installing one. This is an exception and will be handled on a case-by-case basis.

Figure A3-3
Overhead Primary Service from Overhead Distribution
Preferred Service Arrangement

©2016 Pacific Gas and Electric Company. All rights reserved.

Technical Requirements for Electric Service Interconnection at Primary Distribution Voltages

DOCUMENT APPROVER

Connie Pascua Taylor, Supervising Standards Engineer, Electric Distribution Standards

Roozbeh Movafagh, Senior Manager, Distribution Standards Engineering

DOCUMENT CONTACT

Daniel Jantz, Engineering Standards Technical Specialist Expert, Electric Distribution Standards

INCLUSION PLAN

There is no set inclusion plan at this time for this bulletin.

REVISION NOTES

Where?	What Changed?
Entire Document	Corrected the GDM outline numbering and bullet formatting.
What you need to know	• 2.4 Service Wire Configuration: Added new requirement. • 3.1 Data the PS Customer Provides to PG&E: Replaced 10 working days with 30 working days in item 3. • 4.1 Circuit Breaker Requirements: Corrected reference to Table 1 PG&E Approved Relays on Page 7. • 5 Equipment Test Requirements: Replaced 10 working days with 30 working days in bullet #2 and replaced three working days with ten working days in the last paragraph. • 6 Pre-Energizing Test: Added new requirements in 6.1.2.a. and 6.1.3. • 11 Battery Requirements for Interconnecting to the PG&E System: Updated document submission and battery requirements in subsection 11.5.

©2016 Pacific Gas and Electric Company. All rights reserved.

Appendix C
Electric and Gas Engineering Documents

Appendix C Electric and Gas Engineering Documents

Appendix C
Electric and Gas Engineering Documents

Appendix C contains the electric numbered engineering documents and gas design standards listed in Table C-1 and Table C-2, below. Applicants should access Pacific Gas and Electric Company's (PG&E's) Internet website at www.pge.com/greenbook to find the latest versions of and updates to these documents. Also, applicants may contact their local PG&E service planning office to ensure their documents are current.

NOTE: See Table FM-1, "Service Planning Office Contact Information," at the front of this manual starting on Page iv, for specific contact numbers listed by area.

Table C-1 Gas Design Standards

Section [1]	Document Number	Title
A: Pipes, Mains, and Services (1)	A-42	Standard Branch Service Installation
	A-75	Gas Service and Mains in Plastic Casing
	A-81	Plugs and Caps for Non-Pressurized Gas Pipelines
	A-90	Polyethylene Gas Distribution System Design
	A-93.1	Installing and Maintaining a Polyethylene Gas Distribution System
	A-93.3	Polyethylene Excess Flow Valves
J: Meters, Gauges and Instruments (1)	J-15	Gas Meter Locations
	J-16	Gas Meter Room
	J-65.1	Volume Pulse Output Connection for Gas Meters
	J-95	Meter Guard Design and Installation Arrangement
K: Pits, Vaults, Boxes, and Shelters (1)	K-51	Single Meter Cabinet for Domestic Gas Meters
L: Marker Tags, Signs, Barricades, and Fences	L–16	Gas Pipeline Underground Warning Tape
Greenbook (2)	N-01	PG&E Approved Gas Materials Manufacturers

1 For PG&E reference only: "Section" refers to the section in PG&E's *Gas Standards and Specifications Manual,* which contain these documents.

2 This document is not in the *Gas Standards and Specifications Manual.*

Table C-2 Electric Engineering Documents

Section [1]	Document Number	Title
Underground (1) Connectors	013109	Corrosion Resistant Ground Rods and Ground Rod Clamps
Underground (1) Connectors	015251	Connectors for Insulated Cables Underground Distribution Systems
Overhead (1) Services	025055	Requirements for Customer-Owned Poles
Underground (1) Enclosures	028028	Secondary Electric Underground Enclosures
Underground (1) Services	036670	Temporary Underground Electric Service Single-Phase, 120/240 Volt, 200 Amps Maximum
Underground (1) Cable	038193	Minimum Requirements for the Design and Installation of Conduit and Insulated Cable
Underground (1) Transformers	041352	Service Entrance From Underground Vault Using Bus Bars
Underground (1) Transformers	045292	Concrete Pad for Three-Phase, Loop-Style, Pad-Mounted Transformers
Underground (1) General	051122	Clearances and Location Requirements for Enclosures, Pads, and Underground Equipment
Greenbook (2)	052521	Electrical Service Requirements for Mobile Home Developments
Underground (1) Services	054619	Agricultural Underground Service 500 HP or Less
Underground (1) Services	054712	Permanent Wood Post Installation Underground Electric Service
Engineering Standards (2)	055103	Planning Guide for Single Customer Substations Served From Transmission Lines
Underground (1) Transformers	057521	Pad-Mounted Transformer Installed Indoors
Overhead (1) Services	058087	Agricultural Overhead Service 300 HP or Less
Underground (1) Services	058817	Terminating Underground Electric Services 0–600 Volts in Customer-Owned Facilities
Greenbook (2)	060559	Disconnect Switch Requirements For Distributed Generation Customers
Underground (1) Services	061032	Residential and Small Commercial Overhead to Underground Electric Service Conversion
Underground (1) Services	062000	Primary Electric Underground Enclosures
Underground (1) Transformers	062111	Application of Underground Distribution Transformers
Underground (1) Conduits	062288	Underground Conduits
Greenbook (2)	063422	Landscape Screen for Pad-Mounted Transformers
Underground (1) Services	063927	Methods and Requirements for Installing Residential Underground Electric Services 0–600 V to Customer-Owned Facilities

1 For PG&E reference only: “Section” refers to the section in PG&E’s *Electric Overhead Construction Manual* or *Electric Underground Construction Manual*, Volumes 1 and 2, which contain these documents.

2 This document is not in the *Electric Overhead Construction Manual* or *Electric Underground Construction Manual.*

Table C-2 Electric Engineering Documents, continued

Section [1]	Document Number	Title
Underground (1) Services	063928	Methods and Requirements for Installing Commercial Underground Electric Services 0–600 Volts to Customer-Owned Facilities
Underground (1) Services	063929	Requirements for Bus Duct Entrance Termination Unit for Use With Pad-Mounted Transformers
Underground (1) Transformers	064309	Box-Pad for Pad-Mounted Transformers
Overhead (1) Services	065374	Overhead and Underground Panel Board Construction
Greenbook (2)	066211	PG&E–Approved Electric Distribution Materials Manufacturers
Greenbook (2)	068179	Service to Cellular on Transmission Tower
Underground (1) General	072149	Requirements for Allowing Installation of Subsurface Transformers

1 For PG&E reference only: “Section” refers to the section in PG&E’s *Electric Overhead Construction Manual* or *Electric Underground Construction Manual*, Volumes 1 and 2, which contain these documents.

2 This document is not in the *Electric Overhead Construction Manual* or *Electric Underground Construction Manual.*

This Page Intentionally Left Blank

GAS DESIGN STANDARD
STANDARD BRANCH SERVICE INSTALLATION

A-42

Publication Date: 10-09-13 **Rev. #**03

This document also appears in the following manual:

- *Gas Applicant Design Manual*

Purpose and Scope

This gas design standard illustrates approved methods of standard branch service installation and shows the approved branch service marker.

Methods of Installation

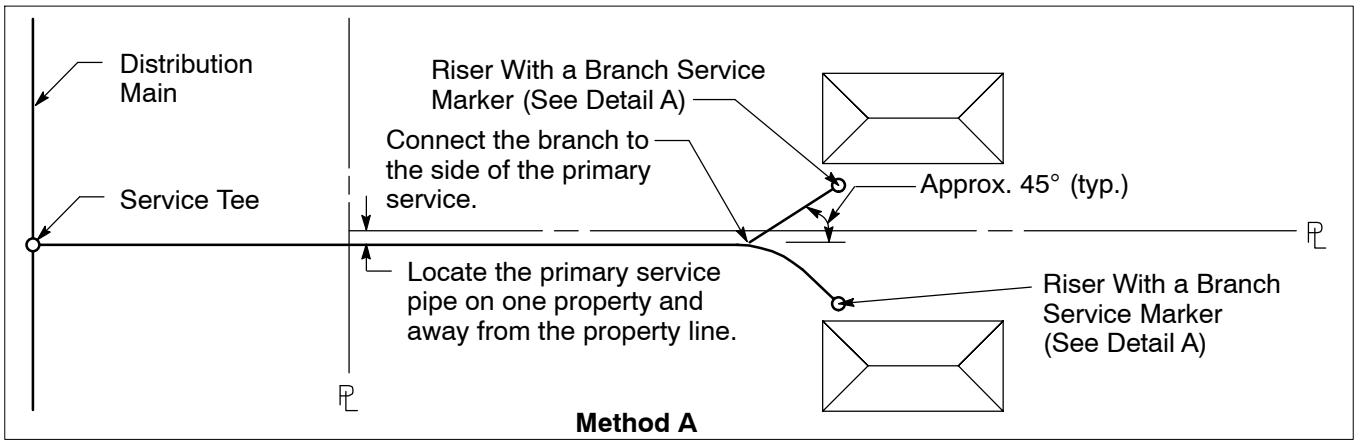

Method A

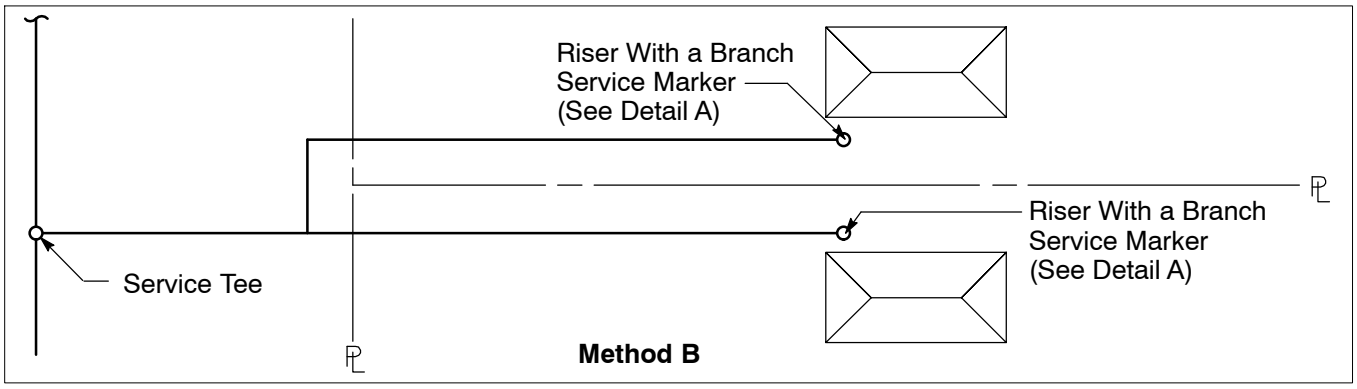

Method B

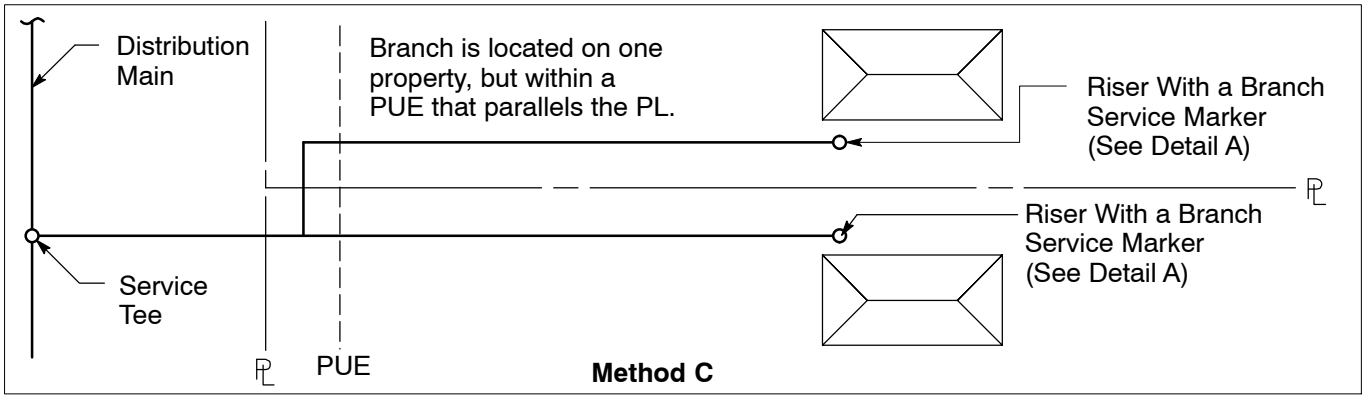

Method C

 ©2013 Pacific Gas & Electric Company. All Rights Reserved.

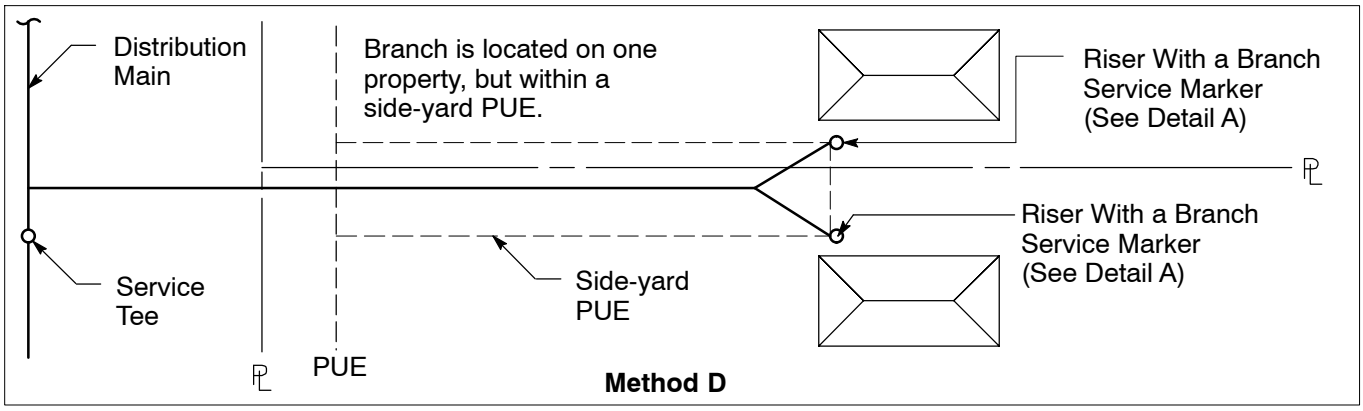

General Information

1. Branching is at PG&E's discretion.
2. Install plastic services in accordance with Gas Design Standard A-90, "Plastic Main and Service Installation."
3. For stub services, install EMS markers in accordance with Gas Design Standard A-90.2, "Locating Wire Installation for Direct Burial Plastic Mains and Services" and Gas Design Standard M-60, "Approved "Mark and Locate" Instruments, Equipment, Accessories, and Products."

Notes on Methods of Installations A-D:

1. Replacement of Existing Branch Services
   a. Method A is the preferred approach for the replacement of an existing branch service for configurations that are similar to Method A. The reasons include:
      - Permission has been previously obtained at this location, based on the presence of the existing branch service.
      - Use of existing branch service locations generally helps reduce costs and minimizes impact to customer.
   b. If the customer disagrees with the location of the branch across their property line, then use Method B.
2. Installation of New Branch Services
   a. Method B, C, and D are acceptable options for the design and installation of a new branch service. Branches shown in Method C and D will require a public utility easement (PUE). A PUE is required for any new branch originating inside a property line to serve an adjacent property.
3. Residential Subdivisions:
   a. For new business, if the applicant chooses Method D, then a side-yard PUE will be required. Currently, Method C is most commonly used in subdivisions.
4. Exceptions to branching across property lines:
   a. If the property owner disagrees with the branch location or if an easement cannot be secured from the property owner, then the branch service will need to be installed outside the property line or new services must be installed.

 PG&E Internal Information, SL2 ©2013 Pacific Gas & Electric Company. All Rights Reserved.

Branch Service Marker

Option 1. A marker made of 3/16” bronze rod, Airco #27 or similar (Code 159064) is formed into an elliptical ring and brazed closed. Do not heat the valve body. Use wet rags to keep the valve body cool when making the marker.

Option 2. A marker made of #8, #10, or #14 copper wire is formed around the cock and secured with a Burndy Hylink connector, or twisted and forged to a solid connection.

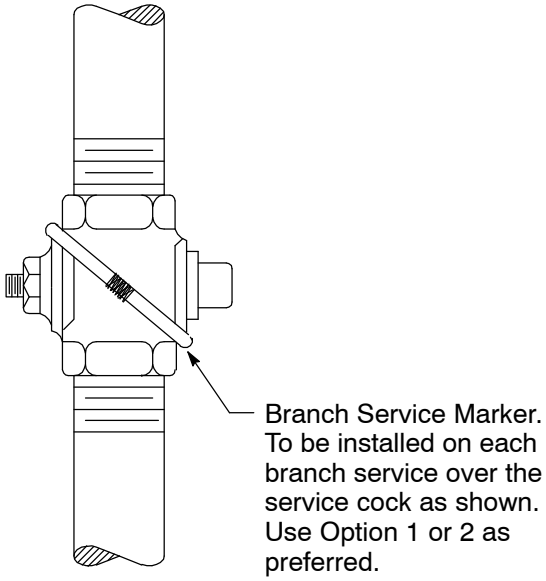

Detail A
Branch Service Marker

 ©2013 Pacific Gas & Electric Company. All Rights Reserved.

Target Audience

Gas estimating, gas distribution engineering and design, gas construction, land department

Definitions

NA

Acronyms and Abbreviations

PL: Property Line
PUE: Public Utility Easement

Compliance Requirement/Regulatory Commitment

NA

References

Plastic Main and Service Installation A-90
Locating Wire Installation for Direct Burial Plastic Mains and Services A-90.2
Approved "Mark and Locate" Instruments, Equipment, Accessories, and Products M-60
Gas Applicant Design Manual

Appendices

NA

Attachments

NA

Revision Notes

Revision 03 has the following changes:

1. Added Notes for Replacement of Existing Branch Services and for Installation of New Branch Services.
2. Added Notes for Subdivisions.
3. Added Exceptions.
4. Added Method C and D. Reversed order of A and B.
5. This document is part of Change 66.

Asset Type: Gas Transmission and Distribution
Function: Design
Document Contact: Gas Design Standard Responsibility List

 PG&E Internal Information, SL2 ©2013 Pacific Gas & Electric Company. All Rights Reserved.

Prepared by: JZB1

GAS SERVICE AND MAINS IN PLASTIC CASING

A-75

Asset Type:	Gas Transmission and Distribution	**Function:**	Construction
Issued by:	M. G. Rossi Original Signed By	**Date:**	05-04-09

Rev. #02: This document replaces Revision #01. For a description of the changes, see Page 7.

This document also appears in the following manuals:

- *Electric and Gas Service Requirements* (Greenbook)
- *Gas Applicant Design Manual*

Purpose and Scope

This numbered document describes the use and design of PE 2406 and PVC casing material for use in PG&E's gas distribution system. PG&E uses PE 2406 and PVC plastic casing material to facilitate the installation of gas mains and services in residential and commercial subdivisions and for select gas main replacement projects. See the manufacturer's product manuals and catalogs and the numbered documents listed in the "References" section below for more information.

Acronyms

ASTM: American Society for Testing and Materials
EFV: excess flow valve
EMS: electronic marker system
ETS: electrolysis test station
F: Fahrenheit
HDD: horizontal directional drilling
ID: inside diameter
IPS: iron pipe size
MDPE: medium-density polyethylene
NA: not applicable
OD: outside diameter
PE: polyethylene
PG&E: Pacific Gas and Electric Company
PVC: polyvinyl chloride
QC/S: Qualified Contractor/Subcontractor
SDR: standard dimensional ratio
USA: Underground Service Alert
UV: ultraviolet

References

	Document
Plastic Gas Lines on Bridge Structures	A-33.1
Design and Construction Requirements – Gas Lines and Related Facilities	A-36
Casings for Highway and Railroad Crossings	A-70
Plugs and Caps for Non-Pressurized Gas Pipelines	A-81
Plastic Main and Service Installation	A-90
Locating Wire Installation for Direct Burial Plastic Mains and Services	A-90.2
Locating Wire Installation for Inserted Plastic Mains and Services	A-90.3
Polyethylene Pipe Specifications and Design Considerations	A-93
Plastic Gas Distribution System Construction and Maintenance	A-93.1
Excess Flow Valves	A-93.3
Plastic System Socket and Butt Fusion Fittings	B-90

Gas Service and Mains in Plastic Casing

References, continued

	Document
Plastic System Accessories	B-90.2
Qualifications for Joining Plastic Pipe	D-34
Gas Services – Residential Branch Installations	Utility Standard D-S0455
Gas Mapping Standard – 1” = 100’ Plat Sheets	Utility Standard D-S0457
Joint Trench	Utility Standard S5453
Polyethylene Heat Iron Socket Fusion	Utility Work Procedure WP4170-04
Polyethylene Heat Iron Saddle Fusion	Utility Work Procedure WP4170-05
Polyethylene Heat Iron Butt Fusion	Utility Work Procedure WP4170-06
Polyethylene Electrofusion Coupling and Saddle Connections	Utility Work Procedure WP4170-07
Repairing Plastic Conduit and Fittings	058548
Underground Conduits	062288
Specification for Polyvinyl Chloride (PVC) Conduits and Fittings	*EMS 64
Specifications for Furnishing and Delivery of Polyethylene (PE) Plastic Piping	*EMS 2503
Horizontal Directional Drilling Manual	
Gas Main Extensions	Gas Rule 15
Gas Service Extensions	Gas Rule 16
Standard Test Method for Tensile Properties of Plastics	ASTM D638
Standard Specification for Polyvinyl Chloride (PVC) Plastic Pipe, Schedules 40, 80 and 120	ASTM D1785-89
Standard Specification for Thermoplastic Gas Pressure Pipe, Tubing, and Fittings	ASTM D2513
Standard Specification for Smooth Wall Polyvinyl Chloride (PVC) Conduit and Fittings for Underground Installation	ASTM F512

Definition

Casing: For the purposes of this numbered document, a casing is also referred to as a sleeve or conduit. Casings are not pressurized and shall only be used to insert a natural gas carrier pipe.

General Information

1. PE 2406 (MDPE) plastic casing material (sleeves and conduit) shall conform to Engineering Material Specification 2503 except as noted in Items 3 and 4.
2. PE 2406 casing material having SDRs not listed in Engineering Material Specification 2503 shall be tested and certified in accordance with ASTM D2513.
3. PE 2406 casing material shall be yellow in color and marked with four orange stripes running the length of the casing. The width of the four orange stripes shall be 1/8” minimum for 2” IPS casing, and shall increase proportionally with increases in the casing size. The orange stripes shall be equally spaced around the circumference of the casing.
4. PE 2406 casing material shall have a printline stating “Natural Gas Sleeve” (instead of “Gas”) running the length of the casing. All other marking information, to include the spacing of printline marks, shall be provided in accordance with the requirements listed in Engineering Material Specification 2503.
5. PVC plastic casing material (conduit) shall conform to Engineering Material Specification 64.
6. PVC plastic casing material shall conform to Numbered Document 062288.
7. PE 2406 casing material is preferred for service conduits and gas main casings. Use ASTM F512 PVC DB-120 for casing material when PE 2406 casing material is not available.
8. The sizes and wall thickness of PE 2406 and PVC casing material, as shown in Table 1 on Page 3, are approved for use in the PG&E system. The use of other sizes, SDRs, and grades of PE 2406 and PVC casing material must have the prior approval of gas transmission and distribution technical services personnel. Contact the plastic hotline at Company phone 223-9161 (415-973-9161) for assistance.

*EMS here refers to Engineering Material Specification.

Gas Service and Mains in Plastic Casing

Table 1 Approved PE 2406 and PVC Casings

Size (IPS)	Material [1]	SDR	Typical Construction Methods	OD (Inches)	ID (Inches)	Length [2] (Feet)	Code	Wall Thickness (Inches)
2	PVC [3, 4]	NA	Direct Bury (Stick)	2.375	2.161	20	016468	0.077
2	PE 2406	11	HDD (Stick) Direct Bury or Insert	2.375	1.917	20	021419	0.216
2	PE 2406	11	HDD (Coil)	2.375	1.917	500	021420	0.216
4	PVC [3, 4]	NA	Direct Bury (Stick)	4.500	4.132	20	016472	0.154
4	PE 2406	13.5	HDD (Stick) Direct Bury or Insert	4.500	3.830	40	021421	0.333
4	PE 2406	13.5	HDD (Coil)	4.500	3.830	400	021422	0.333
6	PVC [3, 4]	NA	Direct Bury (Stick)	6.625	6.111	20	016474	0.227
6	PE 2406	13.5	HDD (Stick) Direct Bury or Insert	6.625	5.643	40	021423	0.491
6	PE 2406	13.5	HDD (Coil)	6.625	5.643	400	021424	0.491
8	PE 2406	13.5	Direct Bury or Insert (Stick)	8.625	7.347	40	021425	0.639
12	PE 2406 [5, 6]	13.5	HDD (Stick) Direct Bury or Insert	12.750	10.862	40	021426	0.945

[1] Minimum order quantities apply. Contact the plastic hotline at Company phone 223-9161 (415-973-9161) for assistance.
[2] Lengths are for sticks or coils. Smaller lengths are for sticks and larger numbers are for coils.
[3] Refer to Numbered Document 062288 for material information and codes for couplings and PVC cement.
[4] Do not use HDD to install PVC casings.
[5] Size and dimensions not referenced in Engineering Material Specification 2503. Dimensions shall conform to ASTM D2513.
[6] Contact the plastic hotline at Company phone 223-9161 (415-973-9161) for procedures and equipment for fusing 12” IPS casing material.

Application

9. The installation of plastic casing material should not to be used as a substitute for proper job scheduling for new business work.
10. The installation of PE 2406 or PVC gas main casings shall not be used to circumvent main line extension rules specified in Gas Rule 15. PE 2406 or PVC main casings shall not be installed in any distribution trench, except under limited circumstances as stated in items 11B and 11C.
11. PE 2406 and PVC casing material may be used to facilitate construction under limited circumstances.
    A. PE 2406 or PVC service casings may be installed on new business work under any of the following circumstances:
        (1) Paving of the property between the service stub and proposed meter site occurs before service completion.
        (2) Completion of the gas service is impractical owing to the likelihood of damage to the service as a result of construction activities.
        (3) The Company or applicant installer cannot meet the developer’s construction scheduling requirements to construct the service completion.

Note: The applicant owns the empty service casing until a gas facility has been inserted and pressurized in accordance with Gas Rule 16. The applicant should be informed of the ownership requirements before construction. This includes the obligation to locate and surface mark the facility pursuant to a USA request and the responsibility to maintain serviceability of the casing and EMS devices. Note that the service casings may only be installed on private property. Do not install them in the public right of way.

B. PE 2406 or PVC gas main casing material may be installed on new business work under either of the following circumstances:

(1) Paving of the street between an existing gas main and proposed gas main extension would occur before the distribution trench is constructed.

(2) Installation of the gas main is impractical owing to the likelihood of damage to the main as a result of construction activities.

The installation of PE 2406 and PVC casings is limited to street crossings that do not traverse state highways or railroads. Refer to Numbered Document A-70 for highway and railroad casing requirements.

Note: The applicant owns the empty casing until a gas facility has been inserted and pressurized in accordance with Gas Rule 15. The applicant should be informed of the ownership requirements before construction. This includes the obligation to locate and surface mark the facility pursuant to a USA request and the responsibility to maintain serviceability of the casing and associated appurtenances.

C. PE 2406 gas main casing material may be installed on reconstruction work under any of the following circumstances:

(1) The replacement method specified involves cast iron bursting or steel pipe splitting.

(2) The replacement method specifies using HDD to cross streets or thoroughfares other than state highways or railroads. Refer to Numbered Document A-70 for highway and railroad casing requirements.

(3) Paving of the street between an existing gas main and proposed gas main extension occurs before the distribution trench is constructed.

(4) Installation of the gas main is impractical owing to the likelihood of damage to the main as a result of construction activities.

CI. PVC gas main casing material may be installed on reconstruction work on a case by case basis. Contact the plastic hotline at Company phone 223-9161 (415-973-9161) for assistance.

CII. PE 2406 and PVC gas main casing material may not be installed as a casing for PE pipe on bridges. Refer to Numbered Document A-33.1 for PE casing requirements on bridge structures.

CIII. PE 2406 and PVC gas main casing material may not be installed as a casing for steel mains or services.

CIV. Gas mains and services shall not be inserted into existing service casings or gas main sleeves that do not meet the requirements of this numbered document unless approved by gas engineering personnel. Contact the plastic hotline at Company phone 223-9161 (415-973-9161) for assistance.

CV. Service casings and gas main sleeves installed on new business work are non-refundable items.

CVI. If another utility or entity encroaches upon a service casing or gas main sleeve on a new business job, the applicant is responsible for providing an alternative trench or removing the other utility's or entity's facility before installing the gas main or service. Contact the rates and tariffs personnel for assistance in resolving these matters.

CVII. If another utility or entity encroaches upon a gas main casing on a reconstruction job, contact the encroaching party and have them remove their facility. Contact Company legal personnel for assistance in these matters.

The approval to install service and gas main casings shall be made before construction by gas engineering personnel.

Limitations

12. Do not install PE 2406 or PVC casing materials where operating temperatures exceed 140°F. Do not install PE 2406 or PVC casing materials within 10' of steam lines or other sources of heat, or at a distance such that the temperature on the PE 2406 or PVC casing materials could exceed 100°F, unless an insulating barrier is provided to ensure that the temperature of the PE 2406 or PVC casing materials is always below 100°F. Crossings of

PE 2406 or PVC casing materials and steam lines are allowed if a thermal insulating barrier is provided and the 100°F temperature limit is maintained. Note: PVC casing material is rated at 194°F. However, the gas carrier pipe is limited to 100°F.

13. Do not install PE 2406 or PVC casing materials in aboveground locations, or where the material could be exposed to UV radiation. PE 2406 or PVC casing materials do not provide sufficient mechanical protection for aboveground installations.
14. Do not install PE 2406 or PVC casing materials in subsurface locations that are contaminated with hydrocarbons or other volatile organic compounds. Contact gas engineering personnel to assess chemical compatibility with PE 2406 or PVC.
15. PE 2406 or PVC service casings shall only be installed on private property. Refer to Gas Rule 16 for ownership requirements and responsibility to furnish materials. PE 2406 or PVC service casings shall be installed at or within the property line and terminate past the paved area with sufficient clearance to insert the gas service (carrier pipe), tie into the existing stub, and set the riser. Follow the requirements of Numbered Document A-90 for the installation of stub services, plastic service completions, and riser installation details.
16. EFVs, couplings, fittings, curb valves, or other appurtenances shall not be installed within a PE 2406 or PVC service conduit. Install EFVs in accordance with the requirements of Numbered Documents A-90 and A-93.3.
17. The maximum permissible length of the service casing is 200'. Service casing shall run in a straight line. Ensure that any sag or over bends are gradual.
18. Refer to Table 2 on Page 5 for recommended casing sizes by gas carrier pipe size.
19. The maximum permissible length of a gas main casing is determined by the safe pulling loads. Refer to Chapter 6 of the *Horizontal Directional Drilling Manual* and Numbered Document A-93.1 for specific guidance in determining allowable loads.
20. PE 2406 and PVC gas main sleeves and service conduits shall not branch or have elbows, reducers, or other inline fittings (except for electrofusion couplings) connected to it.
21. Gas main and service casings shall not contain any other facility other than the natural gas carrier pipe and associated locating wire.
22. When economically feasible, PE 2406 and PVC service casings may be accessed for branch installations. Refer to Utility Standard D-S0455 and Numbered Document A-93.1 for branch requirements. Follow the requirements of Item 45 on Page 7 for accessing service casings.

Table 2 Casing Selection Guide

Gas Carrier Size (IPS) (Inches)	Recommended Casing Size (Inches)
2	4
	6
3	6
4	8
6	12
8	12

Installation Requirements

23. When installing the main or service, ensure that proper alignment and adequate support are provided where the pipe enters and leaves so that no strain will be placed on the carrier pipe.
24. Link seals and split end seals are not required on PE 2406 or PVC casings.
25. Follow the requirements of Numbered Document A-93.1 for PE 2406 installation in a casing or bore hole.
26. PE 2406 and PVC casing materials shall be installed in backfill meeting the requirements specified in Exhibit B of Utility Standard S5453, "Joint Trench Configurations and Occupancy Guide".

Gas Service and Mains in Plastic Casing

27. All empty PE 2406 and PVC service conduits and gas main sleeves shall be capped before backfilling. Install plastic caps or redwood plugs in accordance with Numbered Document A-81. Install EMS markers on both ends of the gas main sleeve or service conduit in accordance with Numbered Document A-93.1.
28. A mandrel shall be used to prove that all service conduits and gas main sleeves are free and clear of dirt, rocks, and other debris before inserting a gas carrier pipe.
29. Where several service conduits have been installed in a joint trench, contact the other utilities involved to request that they seal the ends of their conduits adjacent to the building. A request should be made to each of the other utilities involved for their cooperation. Explain the reason for the seal, and the potential hazard of migrating gas.
30. Provide slack for the carrier pipe so that thermal contraction will not produce tension on the pipe or any fittings or connections.
31. PE 2406 service conduits and gas main sleeves shall be joined by the heat fusion methods prescribed in Table 7 of Numbered Document A-93.1 or by electrofusion. All PE 2406 heat fusions and electrofusion connections shall be made in accordance with WP4170-04, WP4170-05, WP4170-06, and WP4170-07. A current Numbered Document D-34 qualification is **not** required to connect (join) casing materials.
32. Install all PVC service casings in accordance with PG&E Numbered Document 062288.
33. PE 2406 and PVC gas main casings shall be installed to the greatest extent practical at an approximate 90° angle between the existing distribution main and the street or proposed paved area at the point of crossing.
34. PE 2406 and PVC gas main sleeves shall be installed with a minimum cover as specified in Numbered Document A-93.1, unless it is installed in a joint trench crossing a street (paved) area where the cover requirement is determined by Exhibit B of Utility Standard S5453, “Joint Trench Configurations and Occupancy Guide”. If a gas main sleeve is installed in a joint distribution trench, the gas main sleeve shall be in the same relative location in the distribution trench and shall have the same clearance from other structures that would be required for a direct burial installation.
35. PE 2406 and PVC service conduit shall be installed with a minimum cover as specified in Numbered Document A-93.1, unless it is installed in a joint service trench where the cover requirement is determined by Exhibit B of Utility Standard S5453, “Joint Trench Configurations and Occupancy Guide”. If a service conduit is installed in a joint service trench, the conduit shall be in the same relative location in the service trench and shall have the same clearance from other structures that would be required for a direct burial installation.
36. PE 2406 and PVC casings shall not be installed at a depth greater than the depths specified in Table 3 of Numbered Document A-81.
37. All service conduits and gas main sleeves shall have a locating wire attached per the requirements of Numbered Documents A-90.2 or A-90.3, as applicable. The locating wire may terminate either at the casing ends in an ETS or be connected to the locating wires on both ends of the casing.
38. PE 2406 and PVC service and PE 2406 gas main casings do not need to be leak tested.
39. PE 2406 and PVC service and PE 2406 gas main casings do not need to have vents installed except as noted in Item 40A below.
40. After the carrier (service) pipe is installed in the casing, the end of the casing nearest the house or structure being supplied shall be sealed so that any leaking gas cannot migrate through the casing to the building.
    A. If the properly sized casing plug is available for PE 2406 casings, as listed in Numbered Document B-90.2, use it for this purpose. Wrap the casing plug with Tac-Tape (Code 507036) or equivalent tape wrap. If a suitable plug is not available, a plug of duct seal at least 1” long should be used, followed by the Tac-Tape or equivalent. If the other end of the service conduit for the gas line terminates near another building or structure into which gas could migrate, take special precautions to vent the casing to a safe location.
    B. PVC service conduit shall be sealed in accordance with Item 40A above.
41. A 3” wide plastic marking tape with the words “Gas Line in Conduit” (Code 373371) shall be installed on PVC service conduit. The marking tape shall be spiral wrapped around the casing for its entire length and held in place with adhesive tape at 10’ intervals. The marking tape shall be wrapped such that the horizontal distance between spirals does not exceed 36”.
42. The owner of an empty casing shall furnish to PG&E, prior to acceptance of the casing, an as-built drawing (or service record) and a PG&E inspection record indicating that the casing was installed pursuant to this document.

43. Where a gas service or main is installed in a sleeve or conduit, document the information on the plat sheet and service order, as applicable. Refer to Numbered Document A-93.1 and Utility Standard D-S0457 for mapping and records management requirements.

Maintenance and Operations

44. Gas crews and other employees who could respond to a gas emergency should be made aware that some services and mains have been installed through plastic sleeves and conduits. They should be trained on how to recognize and to squeeze off pipe that has been so installed.
45. PE 2406 and PVC service conduits and gas main sleeves may be accessed by window cutting using Company-approved tools. Precautions shall be taken to avoid damaging the carrier pipe. Contact the plastic hotline at Company phone 223-9161 (415-973-9161) for Company-approved materials for cutting and accessing PE 2406 and PVC service conduits and gas main sleeves.
46. A gas service or main that is installed in a service conduit or gas main sleeve that has been squeezed off must be replaced. Numbered Document A-93.1 provides specific replacement instructions.
47. Repair all damaged PVC service conduit in accordance with Numbered Document 058548.
48. Contact the plastic hotline at Company phone 223-9161 (415-973-9161) for assistance in repairing damaged PE 2406 casings.
49. If a broken service conduit or any other problems brought about by using a casing delays Company work, bill the applicant for lost time and associated repair or replacement costs before service completion.

Revision Notes

Revision 02 has the following changes:

1. Updated the “Acronyms” and “References” sections.
2. Added new Footnote 1 and rearranged the sequence of all footnotes in Table 1 on Page 3.
3. Expanded note following Item 11A(3) on Page 4.
4. This document is part of Change 61.

Prepared by: JZB1

PLUGS AND CAPS FOR NON-PRESSURIZED GAS PIPELINES

A-81

Department:	Gas Distribution and Technical Services	**Section:**	Gas Engineering and Planning
Approved by:	G. M. Vollbrecht	**Date:**	04-14-03

Rev. #01: This document replaces Revision #00. For a description of the changes, see Page 4.

Purpose and Scope

This gas standard illustrates, specifies dimensions, and provides code numbers for redwood plugs and plastic caps for use on non-pressurized gas pipelines, as described in UO Standard S4129, “Deactivation of Gas Facilities,” Attachment 1, Table 1. It also provides the manufacturer’s part numbers for plastic caps.

Acronyms

PE: polyethylene
UO: Utility Operations
UV: ultraviolet

General Information

1. For steel and PE pipe, use plastic end caps for deactivation, where possible. For cast iron pipe, use redwood plugs or other suitable means of sealing for deactivation, as described in UO Standard S4129, “Deactivation of Gas Facilities,” Attachment 1, Table 1.
2. For cap sizes without code numbers and for pipe sizes not shown, contact the Gas Distribution and Technical Services department.
3. Contact the Gas Distribution and Technical Services department when the use of plastic caps at depths greater than those listed in Table 3 on Page 4 is desired.
4. Do not use plastic caps in aboveground locations, or where the cap could be exposed to UV radiation.
5. Do not store plastic caps uncovered, outside where they could be exposed to UV radiation for extended periods of time.
6. If a plastic cap is cracked or cut, discard it (do not use).
7. When using plastic caps, backfill the first 12” above the plastic cap with sand or other suitable material. See Gas Standard A-93.1, “Plastic Gas Distribution System Construction and Maintenance” and Engineering Guideline 4123, “Backfill Sand Specification.”
8. To ensure that a plastic cap is installed properly (full depth of the cap is on the pipe), cut the pipe end squarely, and place a mark on the pipe, at each of the four quadrants, a distance back from the end of the pipe equal to the depth of the cap (Table 2 on Page 3, Column B). When the cap is fully installed, the cap should reach all four of those marks.
9. Do not use any plastic caps other than the caps listed in this standard.

Plugs and Caps for Non-Pressurized Gas Pipelines

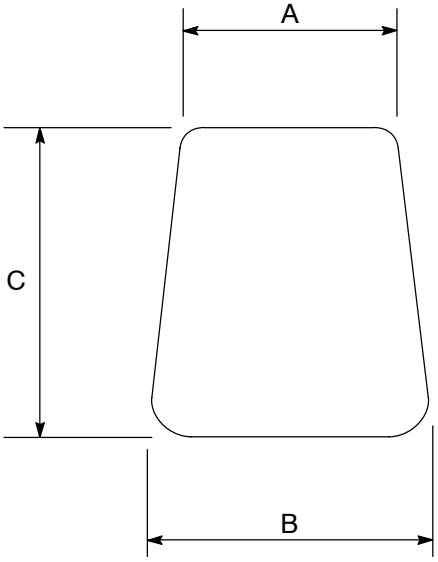

Figure 1
Redwood Plug

Table 1 Dimensions and Code Numbers for Redwood Plugs

Nominal Pipe Size (Inches)	A (Inches)	B (Inches)	C (Inches)	Code
3/4	1/4	1	4-3/8	204839
3/4 - 1-1/4	3/8	1-1/2	5-1/2	209036
1-1/4 - 1-1/2	1/2	2	5-1/2	209037
2	1-3/4	2-1/2	4	209038
3	2-1/2	3-1/2	4-3/4	209039
4	3-1/2	4-1/2	6	209040
6	5-1/2	6-3/4	8-1/4	209041
8	7-1/2	8-7/8	10-1/2	209042
10	9	11	12	200312
12	11-1/2	13	12	200315

Plugs and Caps for Non-Pressurized Gas Pipelines

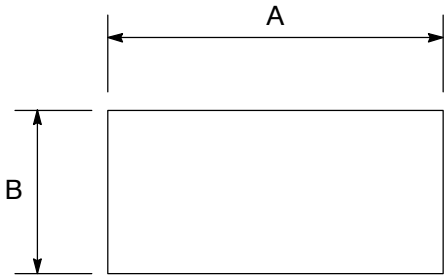

Figure 2
Plastic End Cap

Table 2 Dimensions, Part Numbers, and Code Numbers for Plastic End Caps

Nominal Pipe Size (Inches)	A (Inches)	B (Inches)	Part Number	Code
2	2.378	1.096	RRC-2	021124
3	3.490	1.700	RRC-3	021125
4	4.500	1.725	RRC-4	021126
6	6.640	2.150	RRC-6	021127
8	8.670	2.310	RRC-8	021128
10	10.705	2.768	RRC-10	021130
12	12.679	2.820	RRC-12	021131
16	16.000	2.837	RRC-16	021132
18	18.000	2.845	RRC-18	021133
20	20.000	2.955	RRC-20	021144
22	22.000	2.986	RRC-22	NA
24	24.000	2.995	RRC-24	021139
26	26.000	2.750	RRC-26	021140

Table 3 Approved PE Cap Usage by Pipe Size and Depth of Cover

Nominal Pipe Size (Inches)	Maximum Depth of Cover (to Top of Pipe) (Feet)		
	Horizontal Placement [1]	10° to 45° Placement [2]	45° to 90° Placement [3]
2	10	10	10
3	10	10	10
4	10	10	8
6	10	8	6
8	10	6	5
10	10	5	4
12	9	4	3
16	6	2	–
18	5	–	–
20	5	–	–
22	4	–	–
24	3	–	–
26	2	–	–

[1] The axis of the pipeline is horizontal, angled up not more than 10°, or angled downward.
[2] The axis of the pipeline is angled up more than 10°, but less than 45°.
[3] The axis of the pipeline is angled up more than 45°.

Revision Notes

Revision 01 has the following changes:

1. Revised entire Table 3 to provide specific maximum depth of cover depending on the nominal pipe size and the pipe placement.
2. This document is part of Change 52.

This document also appears in the following manuals:

- Electric & Gas Service Requirements (Greenbook)
- Gas Applicant Design Manual

Purpose and Scope

This Gas Design Standard (GDS) provides design requirements for the Pacific Gas and Electric Company (Company) polyethylene (PE) gas distribution system. Company PE installations meet the Code of Federal Regulations 49 (CFR) 192.321, "Installation of plastic pipe."

Areas covered in this GDS include:

- General Information
- Materials: pipe, fittings, risers, valves and locating wire
- Polyethylene Pipe Placement
- Construction Methods: preferred PE joining methods, direct-burial plastic main and service installation, mechanical insertion of polyethylene main and service and plastic service renewal.
- Records

General Information

1. **Connections within the PE system may be made with the following:**
   - Heat iron socket and butt fusion (reference Gas Design Standard B-90, "Plastic System Socket and Butt Fusion Fittings")
   - Heat iron saddle fusion (reference Gas Design Standard B-90.1, "Plastic System Saddle Fittings")
   - Electrofusion (reference Gas Design Standard B-90.3, "Electrofusion Fittings and Tapping Tees")
   - Mechanical fittings (reference Gas Design Standard B-91, "Transition Fittings for Polyethylene Pipe" and Gas Design Standard, B-91.1, "Polyethylene (PE) System Mechanical Fittings").

     NOTE: Any connection to Aldyl-A pipe requires mechanical or electrofusion fittings ONLY. Heat iron fusion is NOT allowed on Aldyl-A pipe.
   - IF the SDR (wall thickness) of an Aldyl-A pipe is unknown,

     THEN electrofusion must be used.
2. **Evaluate cathodic protection impacts of the design:** Utility Standard S0470, "Design and Construction of Gas Distribution Facilities" requires a corrosion mechanic or gas operating supervisor to evaluate the cathodic protection impacts and needs associated with a project during the design stage of the project.
   a. All isolated steel pipe, risers, valves, and/or fittings within a PE pipe system must be cathodically protected. Prefabricated risers, metallic components on plastic valves, tapping tees, and/or metallic bolts on plastic fittings do NOT need to be protected. Refer to *Gas Transmission and Distribution Manual - Corrosion Control Volume.*
3. Ensure plastic mains or services are not subjected to temperatures greater than 140ºF as described in Gas Design Standard A-93, "Polyethylene Pipe Specifications and Design Considerations."
4. To deactivate a plastic service see Gas Design Standard A-93.2, "Deactivation of Plastic Services."

 ©2014 Pacific Gas & Electric Company. All Rights Reserved.

Materials

Only pipeline components listed in the Company's Gas Standards and Specifications, Gas Information Bulletins and Flash emails are allowed in construction of the gas system.

1. **Pipe**
   a. Pipe sizing:
      - 2", 4", 6" or 8" PE main is preferred.
      - New services and fully replaced services are to be 1" CTS or larger.

        Exceptions: Existing 3/4" steel services may be replaced with inserted 1/2" CTS polyethylene, if the 1/2" CTS polyethylene has the capacity to support current customer loads and is consistent with Gas Design Standard A-93.3, "Plastic Excess Flow Valves," when an excess flow valve (EFV) is required.

        Existing 1/2" CTS PE service may be replaced by pipe splitting with 1/2" CTS as described in Utility Procedure TD-4634P-01, "Polyethylene Service Splitting."

        Note: 1/2" CTS may ONLY be used for inserting, 1/2" CTS pipe splitting, partial service alterations, and leak repairs to existing 1/2" CTS services.
      - On applicant installed jobs, the Company may accept previously installed 1/2" CTS services and 1/2" CTS service stubs installed prior to May 1, 2010, if those services and stubs have the capacity to support the current customer loads, as approved by the local area engineer. See Appendix 1 for the requirements that must be met to approve previously installed applicant installations.
2. **Fittings**
   a. Heat Iron Fusion Fittings are listed in Gas Design Standard B-90 and Gas Design Standard B-90.1.
   b. Electrofusion Fittings are listed in Gas Design Standard B-90.3.
   c. Approved PE-to-PE mechanical connections are listed in Gas Design Standard B-90.1, Gas Design Standard B-91, and Gas Design Standard B-91.1.
   d. Make PE-to-steel, PE-to-copper, or PE-to-cast-iron transition joints using the approved transition fittings shown in:
      - Gas Design Standard B-54, "Compression Couplings"
      - Gas Design Standard B-91, "Transition Fittings for Polyethylene Pipe"
      - Gas Design Standard, B-91.1, "Polyethylene (PE) System Mechanical Fittings"
      - Gas Design Standard B-91.4, "Cast Iron to Steel Insulated Transition Couplings"
      - Gas Design Standard B-91.5, "Cast Iron to Polyethylene Transition Fittings"
3. **Risers**
   a. Pre-fabricated risers are listed in Gas Design Standard A-91, "Prefabricated Risers."
4. **Valves**
   a. Excess Flow Valves (EFVs) are listed in Gas Design Standard A-93.3.
   b. PE valves are listed in Gas Design Standard F-90, "Polyethylene (PE) Valves."
   c. Contact the local area engineer to determine requirements when using steel valves within a PE system. For example: when installing fire/emergency valves upstream and downstream of regulator stations.

      When steel valves are installed in a PE system, vertical or horizontal steel legs must be welded to the steel pipe or transition fittings to prevent the valve body from rotating (see examples in A-90 Attachment 1, "Illustration of a Direct Burial Main and Service Installation"). Gas Design Standards and Specifications, Section F provides information on steel valves.
5. **PE Pipe Locating**
   a. For locating wire requirements see Gas Design Standard A-90.2, "Locating Wire Installation for Direct Burial Plastic Mains and Services" and Gas Design Standard A-90.3, "Locating Wire Installation for Inserted Plastic Mains and Services."

 PG&E Internal Information, SL2 ©2014 Pacific Gas & Electric Company. All Rights Reserved.

Polyethylene Pipe System Design

1. **Polyethylene Pipe Placement:**

   Horizontal distance:

   a. Polyethylene distribution gas main must be installed a minimum horizontal distance of 10' from the face or foundation of any building.

      - IF the main must be installed closer than 10' to a foundation or building,

        THEN contact the local area gas engineer to determine if additional protection for the gas main is required.

   Burial depth:

   a. Place gas only facilities in the distribution trench per GS Interim Standard 463-4, "Cover and Clearance Requirements for Transmission Lines, Mains and Service Lines."

   b. Place joint trench gas facilities in the distribution trench per Utility Standard S5453, "Joint Trench." Placement in a Public Utility Easement (PUE) is preferred.

   c. Plastic pipe is susceptible to buckling and crushing at specified depths due to the effects of soil stresses. Plastic pipe may NOT be installed at a depth greater than 10' unless the installation is evaluated for fill-stress effects and is approved by the area senior gas distribution engineer.

   Gas service placement:

   a. Gas service is normally installed in a straight line at a right angle to the main, traversing from the main to the meter.

      - Offsets, diagonal runs, and bends should be avoided wherever possible.
      - Where avoidable, service should NOT be installed under driveways or customer-paved areas.

   b. When an applicant changes the service-point location (flop lots), take one of the following actions:

      i. For short-side service stubs, cut off the service stub at the main per Gas Design Standard A-93.2. Install a new service.

      ii. For long-side service stubs:

         - IF the street is not yet paved,

           THEN cut off the service stub at the main per Gas Design Standard A-93.2. Install a new service.

         - IF the street is paved and the walls of the new building are still opened,

           THEN use the existing service-point location and have the applicant re-plumb the houseline to the original service-point location.

         - IF the street is paved and the walls of the new building are closed,

           THEN consult the local area engineer to determine the change in service lay-out.

   c. The final grade level for a pre-fabricated riser must be at or below the red burial line indicated on the riser as described in Gas Design Standard A-91.

2. **Typical Subdivision Design for PE Pipe**

   Figure 1 shows a "Typical Subdivision Design - Infill" and Figure 2 shows a "Typical Subdivision Design - End of System Growth"

   a. The local gas distribution engineer must specify main-line rib sizes and tie-in locations.

   b. Do NOT terminate gas distribution facilities at the end of a development to clear paving or other improvements unless the applicant requests an extension to serve adjacent future development. Terminate these facilities approximately 5' past the last service or to the next property line within the project area, unless approved by the area senior gas distribution engineer.

   c. To make sharp turns or offsets (smaller than the minimum bend radius in Table 2), install full-opening heat fusion fittings per Gas Design Standard B-90 or electrofusion fittings per Gas Design Standard B-90.3.

 ©2014 Pacific Gas & Electric Company. All Rights Reserved.

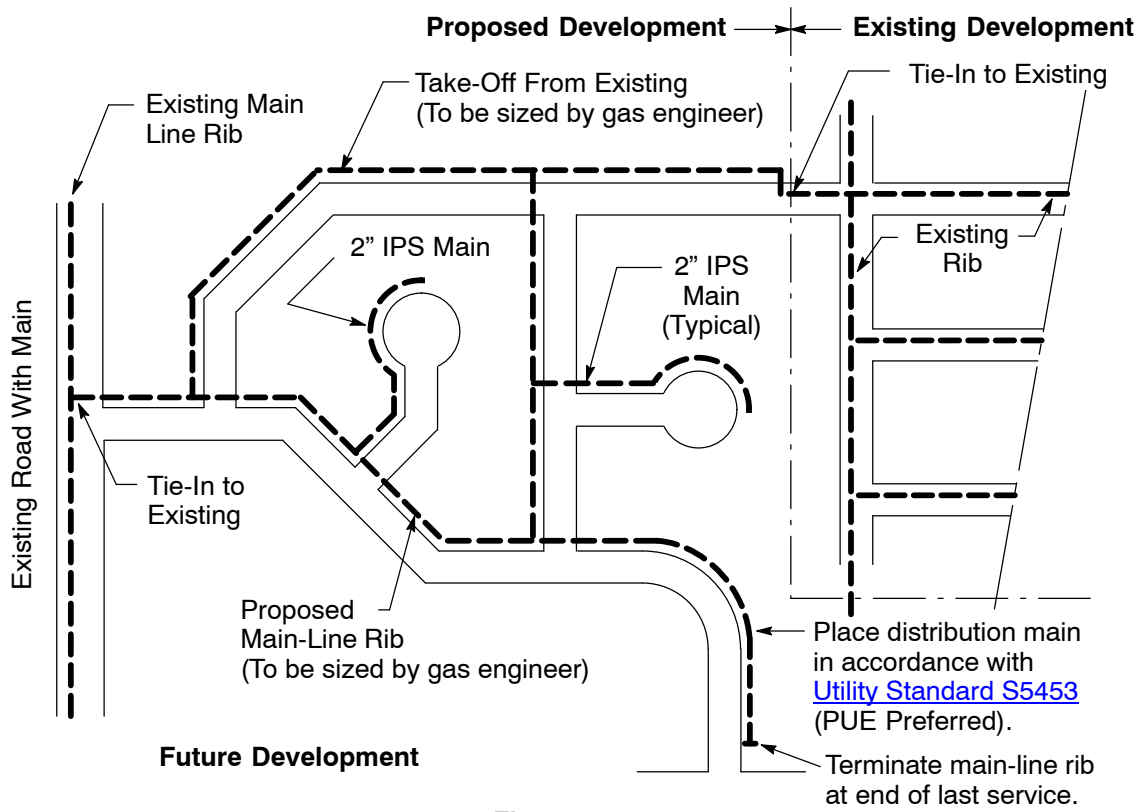

Figure 1
Typical Subdivision Design – Infill

d. Place the gas facilities in the distribution trench per Utility Standard S5453. Placement in a PUE is preferred.

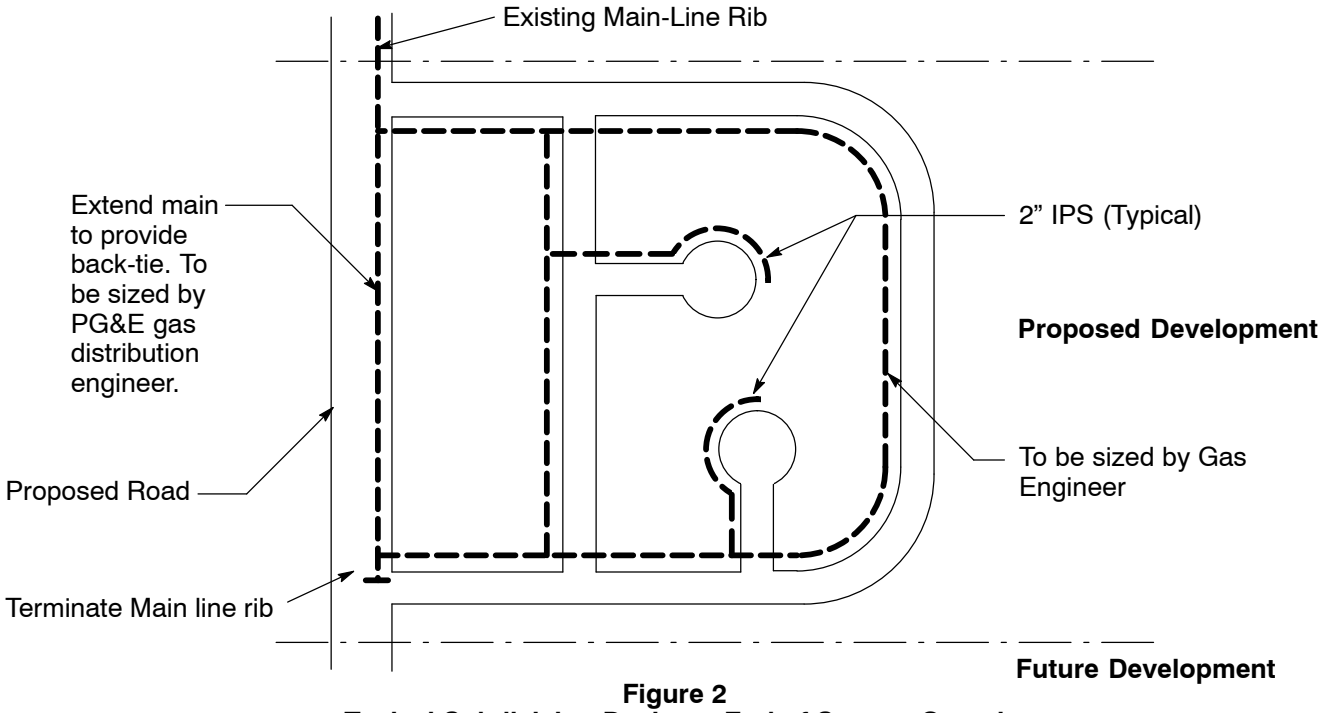

Figure 2
Typical Subdivision Design – End of System Growth

e. A subdivision design for end of system growth is shown in Figure 2. Extend the distribution main along the proposed road to provide a back-tie to the proposed development.

 PG&E Internal Information, SL2 ©2014 Pacific Gas & Electric Company. All Rights Reserved.

3. **Branch Services**

   a. Branch services must be designed and installed as outlined in Gas Design Standard A-42, "Standard Branch Service Installation."

   b. Branching may be used to provide service to NO more than two buildings. The meter installations must be located on the adjacent sides of the two buildings served. Where a branch-service installation is justified, a separate location for the gas meter and electric meter is permissible, if necessary.

Construction Methods

1. **PE Joining Methods**

   a. The preferred joining methods for each size pipe are shown in Table 1.

Table 1 PE Pipe Joining Methods

Pipe/Tubing Size (Inches)	Joining Method
1/2 CTS, 1 CTS, and 1-1/4 IPS	Electrofusion, Heat Iron Socket Fusion or Mechanical Fittings
2 IPS	Electrofusion, Heat Iron Socket Fusion, Heat Iron Butt Fusion or Mechanical Fittings
3 IPS and Larger	Heat Iron Butt Fusion and Electrofusion

2. **Typical Direct-Burial Plastic Main and Service Installation**

   a. Do NOT install direct-buried plastic pipe beneath retaining structures, walls or footings, or adjacent to pile or other structures subject to settlement.

   b. Do NOT install direct-buried plastic pipe in unpaved areas where substantial wheel or equipment loading may damage the pipe, unless approved by the local area gas engineer.

   c. A warning tape is to be installed in direct-burial installations per Gas Design Standard L-16, "Gas Pipeline Underground Warning Tape."

   Directional Changes

   d. Changes in pipe direction must be made with elbows or tee fittings at street intersections (as illustrated in A-90 Attachment 1). Roping may be used for directional changes at other locations, when necessary.

   e. Bends in roped PE pipe must be installed in the trench with a radius greater than the minimum recommended radius (Table 2). All bends must have a radius greater than: 20 times the pipe diameter for SDR 7 and 9 and 25 times the pipe diameter for SDR 10, 11, 11.5 and 13.5.

   f. There must be NO fusion or mechanical joints within 3' of any bend.

Table 2 PE Pipe Minimum Bend Radius

Nominal Pipe Size (Inches)	Minimum Bend Radius for PE Pipe Unsupported by Casing
1/2 CTS	1-1/4'
1 CTS	2-1/4'
1-1/4 IPS	3-1/2'
2 IPS	5'
3 IPS	7'
4 IPS	9-1/2'
6 IPS	14'
8 IPS	18'

   g. Ensure that plastic pipe containing fusions or mechanical joints is installed in a straight alignment. Plastic pipe installations are in a straight alignment if the bend radius of the pipe is greater than 150 times the pipe diameter.

 ©2014 Pacific Gas & Electric Company. All Rights Reserved.

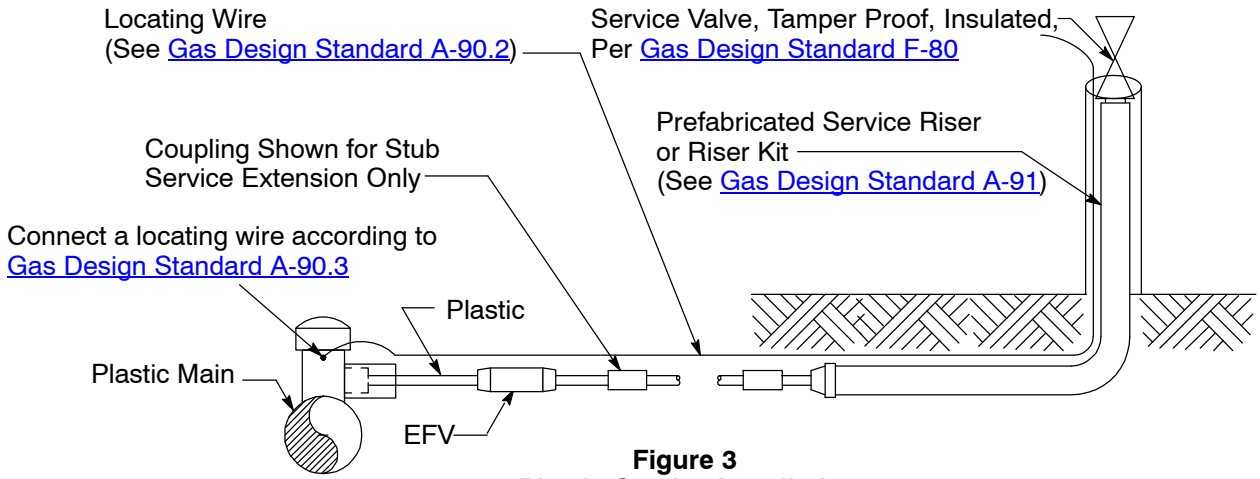

Figure 3
Plastic Service Installation

Figure 3 represents a typical lateral connection. See Gas Design Standard B-90.1 and Gas Design Standard B-90.3 for saddle fittings.

h. For future lateral lines, install a minimum 3' stub with locating wire attached to an anode as described in Gas Design Standard A-90.2

3. **Mechanical Insertion of Polyethylene Main and Service**

a. Refer to the documents below for information on specific casing applications and installations:

- Refer to Gas Design Standard A-75, "Gas Service and Mains in Plastic Casing" for the specific installation requirements for plastic pipe in a plastic casing.
- Refer to Gas Design Standard A-33.1, "Plastic Gas Lines on Bridge Structures" for the specific installation requirements for plastic lines on bridge structures.
- Casing size and other requirements for highway crossings are provided in Gas Design Standard A-70, "Casings for Highway and Railroad Crossings."

b. Do not transfer copper services to a new main or alter copper services (see Utility Standard TD-4801S, "Service Replacement Criteria"). Replace copper services with 1" CTS or larger PE tubing. Install an excess flow valve (EFV) per Gas Design Standard A-93.3. (see illustration in A-90 Attachment 1)

c. Plastic pipe is approved for double inserting into existing mains and services. This application is approved provided the following conditions are met:

- Removing the previously inserted pipe is not practical or economical.
- Installation is made in accordance with Gas Design Standard A-75 or Gas Design Standard A-93.1, "Plastic Gas Distribution System Construction and Maintenance," as applicable, particularly with respect to protecting and supporting the entry and exit points.
- Installation is mapped with both the casing size and casing material identified. An example is shown in the mechanical insertion section of Gas Design Standard A-93.1.

d. Ensure that the minimum bend radius of PE pipe listed in Table 2 is not exceeded during insertion into a casing.

e. Provide for future laterals by installing stubs or opening up the casing at appropriate locations (see Figure 4, "Laterals Off Plastic Main Insert" and Figure 6, "Service Connections Off Plastic Main Insert").

f. Plug the space between the plastic and the casing pipe (see Figure 5, "Tie-In to Steel") with casing plugs or cable protectors (see Gas Design Standard A-70, "Casings for Highway and Railroad Crossings" and Gas Design Standard A-73, "Casing Insulator and End Seals Selection Chart"), duct seal, or other suitable means not detrimental to PE pipe. See Gas Design Standard A-75 for the plastic casing/sleeve sealing requirements.

 PG&E Internal Information, SL2 ©2014 Pacific Gas & Electric Company. All Rights Reserved.

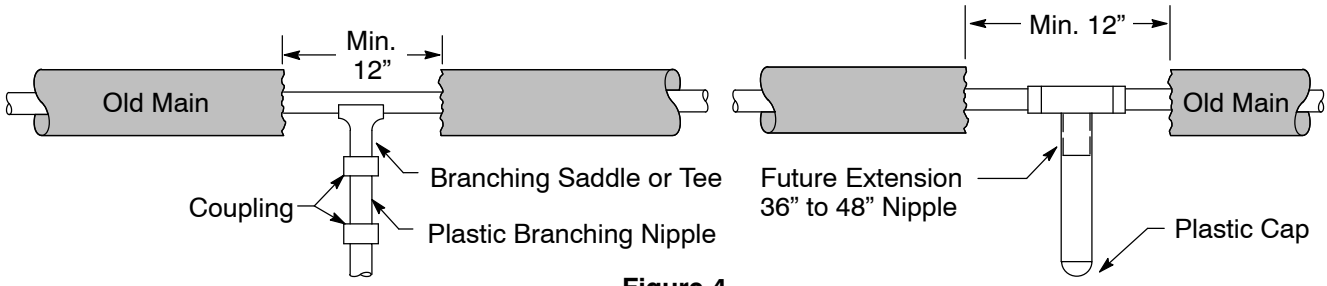

Figure 4
Laterals Off Plastic Main Insert

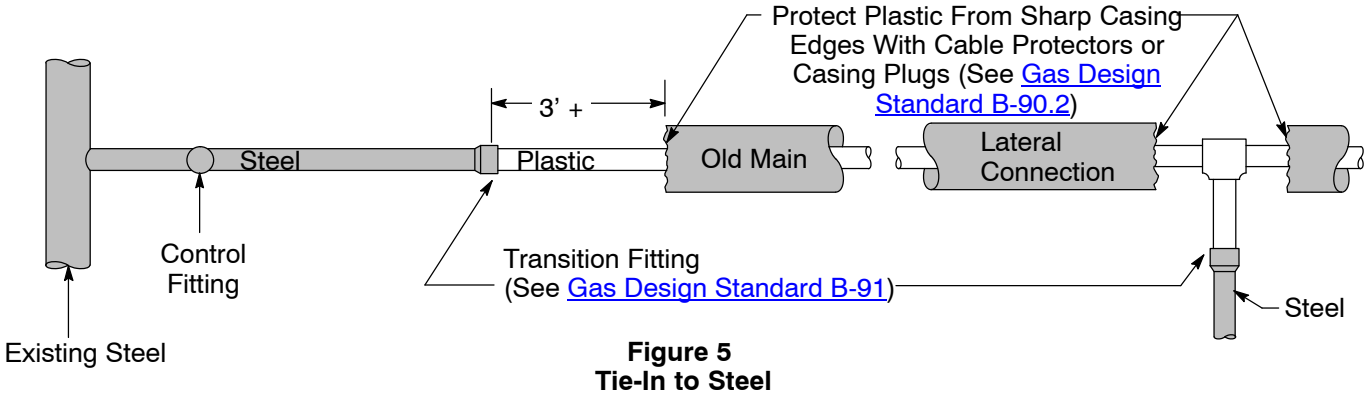

Figure 5
Tie-In to Steel

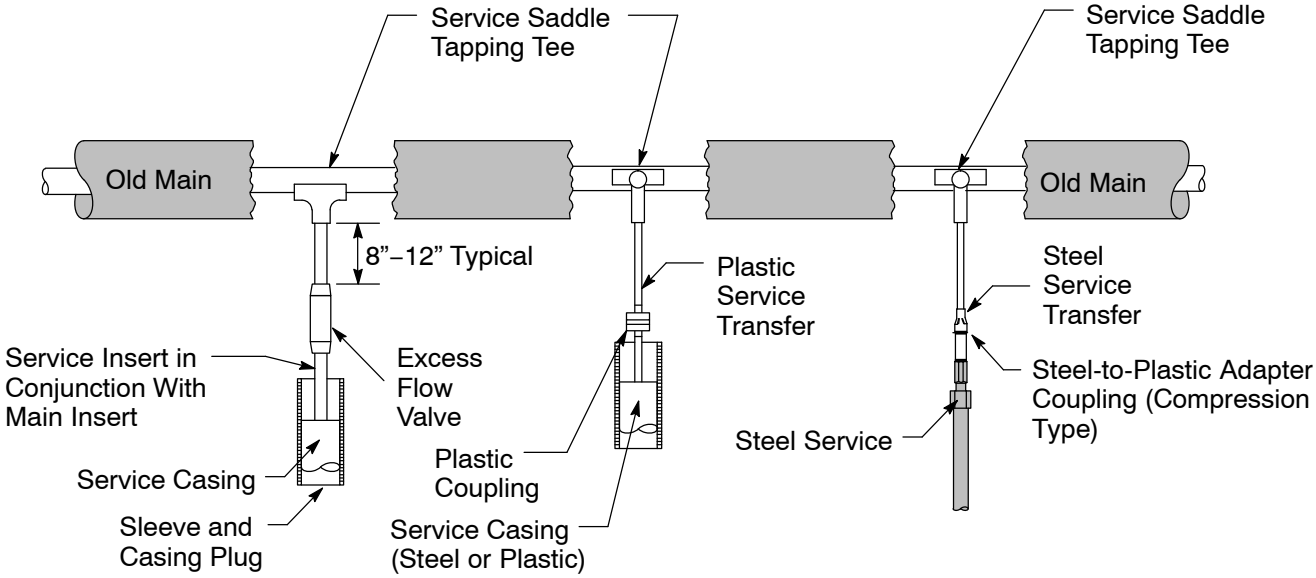

Figure 6
Service Connections Off Plastic Main Insert

4. **Riser Insertion**

   a. Details for service head adapter installation are provided in Gas Design Standard B-91.

   b. Whenever possible, the service riser must be relocated outside of the building (see Gas Design Standard A-91). This section of Gas Design Standard A-90, “Plastic Main and Service Installation,” Figure 7, “Typical Insert into Basement or Meter Box,” is intended for use on service renewals where a new service riser cannot be relocated outside of the building.

 ©2014 Pacific Gas & Electric Company. All Rights Reserved.

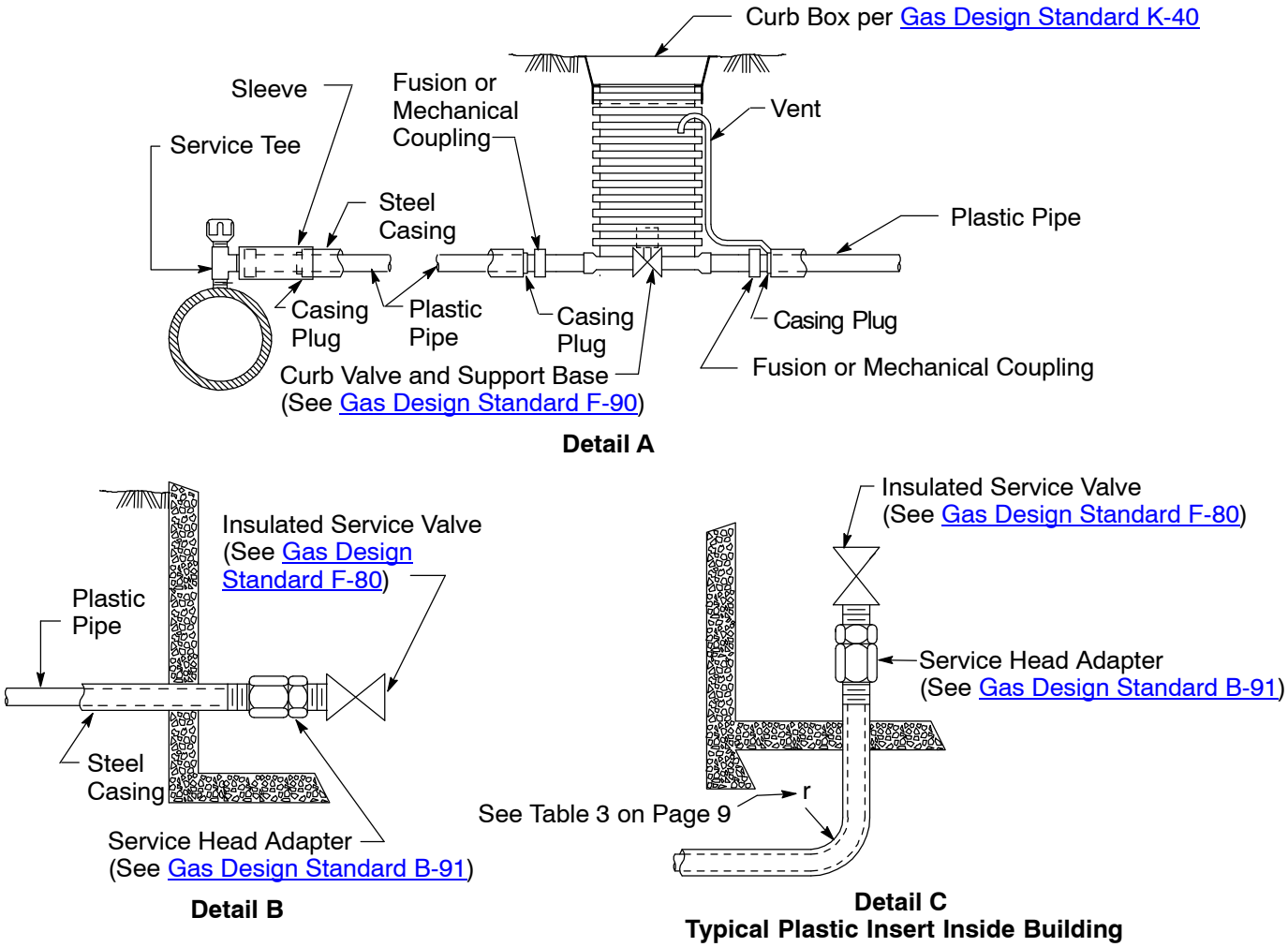

Figure 7
Typical Plastic Insert Into Basement or Meter Box

c. Where possible, the sleeve should bridge the gap between the service tee and the casing pipe. The plastic pipe must be supported by well-compacted sand or fine soil.

d. Use 1/2” CTS copper or stainless steel tubing as a vent pipe.

- The vent pipe must be inserted approximately 6” into the annulus between the casing pipe and plastic pipe (see vent in Figure 7).
- The tubing may be slightly oval to fit into the annulus.
- Use care to avoid restricting the carrying capacity of the tubing.
- Insulate the tubing from the steel casing by wrapping the tubing with tape.
- Drill a 3/8” hole into the plastic extension of the curb valve box and insert the tubing with a slight gooseneck to prevent dirt from clogging the vent.

e. Do NOT insert plastic pipe into a casing if the casing pipe radius is less than that shown in Table 3.

- IF the radius is less than Table 3,

  THEN install a new riser with the proper bend radius.

f. Install the curb box so that external loads are not transmitted to the service. The valve box must NOT rest on the service pipe or casing.

 ©2014 Pacific Gas & Electric Company. All Rights Reserved.

Table 3 Minimum Bend Radius in a Riser Casing for Specified Pipe Sizes

Pipe Size (Inches)	Minimum Radius (Inches)
1/2 CTS	18
1 CTS	28
1-1/4 IPS	41-1/2

g. See Gas Design Standard A-44, "Service Connections to Cast Iron Main" for information on connecting plastic to cast iron.

5. **Records**

a. The brand name of all plastic pipe lots installed at each location and the date it was manufactured must be recorded in the permanent records. This may require multiple plastic stamps for construction drawings. Figure 8 depicts a sample plastic stamp for construction drawings.

- Note the pipe's brand and manufacturing date (MM/DD/YY format) on the foreman's copy of the completed estimate.
- Transcribe this information to the file copy.
- Record the brand and manufacturing date (MM/DD/YY format) of pipe used for service installations in the "Remarks" section of the Form F5458-1, "Gas Service Record," or the Form TD-4110P-03-F01, "Leak Repair, Inspection, and Gas Quarterly Incident Report," as appropriate.
- See A-93 Attachment B, "Approved PE Pipe/Tubing Manufacturers and Plants" for a description of print line information.

 ©2014 Pacific Gas & Electric Company. All Rights Reserved.

TEST AT 100–110 PSI FOR MINIMUM OF 5 MIN			
Pressure	Duration	Initials	Date of Test
Plastic Pipe Data			
Footage and Size		_____/_____	
SDR / Wall Thickness		_____	
Pipe Manufacture		_____	
Date Manufactured		_____	
☐ PE 2406/2708		☐ Other PE:	
Footage and Size		_____/_____	
SDR / Wall Thickness		_____	
Pipe Manufacture		_____	
Date Manufactured		_____	
☐ PE 2406/2708		☐ Other PE:	
Foreman LAN ID: _____		Date: _____/_____/_____	
Foreman Signature: _____			
List all plastic pipe by footage, size, manufacture and date manufactured per Gas Design Standard A-93.1			

Figure 8
Plastic Pipe Stamp

 PG&E Internal Information, SL2 ©2014 Pacific Gas & Electric Company. All Rights Reserved.

Target Audience

Gas planners, estimators, new business inspectors, gas distribution engineers, maintenance and construction, general construction, materials inspectors, and personnel involved in PE pipe connection training and qualification.

Definitions

NA

Acronyms and Abbreviations

NA

Compliance Requirement/Regulatory Commitment

Installation of plastic pipe	49 CFR 192.321

References

Code Numbers for Steel Pipe	A-15
Plastic Gas Lines on Bridge Structures	A-33.1
Piping Design and Test Requirements	A-34
Standard Branch Service Installation	A-42
Service Connections to Cast Iron Main	A-44
Copper Pipeline Defects	A-67
Casings for Highway and Railroad Crossings	A-70
Casing Insulator and End Seals Selection Chart	A-73
Gas Service and Mains in Plastic Casing	A-75
Plastic Main and Service Installation	A-90
Locating Wire Installation for Direct Burial Plastic Mains and Services	A-90.2
Locating Wire Installation for Inserted Plastic Mains and Services	A-90.3
Prefabricated Risers	A-91
Polyethylene Pipe Specifications and Design Considerations	A-93
Plastic Gas Distribution System Construction and Maintenance	A-93.1
Deactivation of Plastic Services	A-93.2
Plastic Excess Flow Valves	A-93.3
Compression Couplings	B-54
Plastic System Socket and Butt Fusion Fittings	B-90
Plastic System Saddle Fittings	B-90.1
Polyethylene (PE) System Accessories	B-90.2
Electrofusion Fittings and Tapping Tees	B-90.3
Transition Fittings for Polyethylene Pipe	B-91
Polyethylene (PE) System Mechanical Fittings	B-91.1
Cast Iron to Steel Insulated Transition Couplings	B-91.4
Meter Valves	F-80
Polyethylene (PE) Valves	F-90
Gas Meter Locations	J-15
Gas Meter Room	J-16
Plastic Valve Box for 3/4” - 4” Valves	K-40
Gas Pipeline Underground Warning Tape	L-16
Gas Service Record	F5458-1
Cover and Clearance Requirements for Transmission Lines, Mains and Service Lines	GS I.S. 463-4
Design and Construction of Gas Distribution Facilities	S0470
Joint Trench	S5453
Leak Repair, Inspection, and Gas Quarterly Incident Report	TD-4110P-03-F01
Polyethylene Service Splitting	TD-4634P-01
Service Replacement Criteria	TD-4801S
Squeezing Polyethylene (PE) pipe	WP4170-02

Gas Design Standards and Specifications, Section F

Gas Transmission and Distribution Manual - Corrosion Control Volume

Plastic Pipe Institute (PPI) Handbook, Chapter 7, Underground Installation of PE Piping

ASTM F1973-08, Standard Specification for Factory Assembled Anodeless Risers and Transition Fittings in Polyethylene (PE) and Polyamide 11 (PA11) and Polyamide 12 (PA12) Fuel Gas Distribution Systems

 ©2014 Pacific Gas & Electric Company. All Rights Reserved.

Appendices

Appendix 1 – Application of New Installation and Design Requirements to Qualified Delayed Applicant-Installed Work

Attachments

Illustration of a Direct Burial Main and Service Installation . . . . . A-90 Attachment 1

Revision Notes

Revision 06 has the following changes:

1. Gas Design Standard A-93.1 and Gas Design Standard A-90 have been revised to organize all design information for the plastic pipe system in Gas Design Standard A-90 and construction information into Gas Design Standard A-93.1. Several items were moved from Gas Design Standard A-93.1 into the Gas Design Standard A-90 design document including preferred joining methods and the minimum bend radius for pipe.
2. The title of the document has been changed from “Plastic Main and Service Installation” to “Polyethylene Gas Distribution System Design”.
3. The document formatting has changed to clarify wording and group subjects. References have been updated and some new references added to direct document users to additional information.
4. Incorporated 1” service requirements and installation information from TD-A-90B-001 to Appendix 1.
5. The instruction for inserting 1/4” CTS PE tubing for service replacement has been removed. 1/4” CTS PE pipe and fittings are no longer approved for installation.
6. Removed detail for locating wire requirements. These requirements are now detailed in Gas Design Standard A-90.2 and Gas Design Standard A-90.3.
7. Removed branch service installation information covered in Gas Design Standard A-42 and added Gas Design Standard A-42 as a reference.
8. Added the requirement that any new gas main must be installed at the minimum horizontal distance of 10’ from the nearest structure.
9. The preferred joining methods in Table 1 have been revised.
10. Added requirement for warning tape in direct burial installations per Gas Design Standard L-16.
11. Revised the bending radius for installed PE pipe in a typical direct-burial plastic main and service installation.
12. Revised Plastic Pipe Stamp in Figure 8 to add SDR/wall thickness.

Asset Type: Distribution
Function: Design, Construction and Maintenance
Gas Design Standard Contact: **Gas Design Standard Responsibility List**

 PG&E Internal Information, SL2 ©2014 Pacific Gas & Electric Company. All Rights Reserved.

Appendix 1 – Application of New Installation and Design Requirements to Qualified Delayed Applicant Installed Work

This appendix clarifies how to apply various new installation and design requirements to qualified delayed applicant-installed gas projects, where the gas distribution main backbone and service stubs were installed and inspected, but the service completions have not been completed for many months or years.

NOTE: This does NOT apply to any “At-risk” projects.

The Company has encountered “delayed” applicant-installed projects (e.g. subdivisions) where the gas distribution main backbone and service stubs were installed and inspected, but the service completions have not been completed for many months or years and the system has not been pressurized, energized and accepted by the Company. These projects must meet the criteria:

- Job designs were previously approved by Company.
- Contracts were executed by the applicant with Company for the project.
- Company has inspected the work to date on the project.

Current installation and design requirements must be applied when a delayed project is actually pressurized and placed in service.

This appendix addresses the following new requirements:

- Pipe locating requirements
- One-inch diameter services
- 1000-foot maximum spacing between Electrolysis Test Stations (ETS)
- Locating wire gauge requirements for plastic pipe installations
- Pressure testing

1. **Locating Requirements**

   Applicant Installers are required to mark dead end gas mains and gas service stubs as described in Gas Design Standard A-90.2 and Gas Design Standard A-90.3.

2. **One inch services**

   The Company will accept previously-installed 1/2” services and 1/2” service stubs installed prior to May 1, 2010, if those services and stubs have the capacity to support the current customer loads.

   The gas service stub must be at least 1” in diameter if any of the following conditions exists:

   - Customer gas load conditions require a larger size gas service. For example, 1” Excess Flow Valves (EFVs) and services are required for service lengths of 122 feet or longer, per Gas Design Standard A-93.3. Please note that Gas Design Standard A-93.3. also directs that EFVs are not to be installed on stub completions.
   - Branch services
   - Changed or new customer gas loads that exceed the capacity of the previously designed service.

3. **1,000-ft. maximum spacing between ETS boxes**

   Applicant Installers are required to install ETS boxes every 1,000 feet (or closer) in accordance with Gas Design Standard A-90.2.

4. **Locating wire gauge requirements for plastic pipe installations**

   The Company will accept 14-gauge locating wire on existing plastic pipe service installations, installed prior to August 1, 2009, as long as the wire passes continuity tests. Applicant installers are not required to replace existing 14-gauge wire (that pass continuity tests) with 10-gauge on plastic services and service stubs that have already been installed. However, all new plastic services and service stubs must be installed with 10-gauge wire in accordance with Gas Design Standard A-90.2 and Gas Design Standard A-90.3.

5. **Pressure Test**

   Main and stubs are required to be tested per Gas Design Standard A-34.

 ©2014 Pacific Gas & Electric Company. All Rights Reserved.

This document also appears in the following manuals:

- Electric & Gas Service Requirements (Greenbook)
- Gas Applicant Design Manual

Purpose and Scope

This Gas Design Standard provides requirements for installing and maintaining the Pacific Gas and Electric Company (Company) polyethylene (PE) gas distribution system as required by Code of Federal Regulations 49 (CFR) 192.321, "Installation of plastic pipe."

The subject areas covered include:

- General Information
- Construction Materials
- Construction Methods
- Direct Burial
- Mechanical Insertion of Polyethylene Pipe
- Repairs
- Testing
- Recordkeeping

General Information

1. **Joining Polyethylene**

   a. Only personnel qualified under Gas Design Standard D-34, "Qualifications for Joining Plastic Pipe" may make connections to plastic gas distribution facilities.

   b. Connections within the PE system may be made with the following:

      - Heat socket fusion and butt fusion (Gas Design Standard B-90, "Plastic System Socket and Butt Fusion Fittings")
      - Heat saddle fusion (Gas Design Standard B-90.1, "Plastic System Saddle Fittings")
      - Electrofusion (Gas Design Standard B-90.3, "Electrofusion Fittings and Tapping Tees")
      - Mechanical connection (Gas Design Standard B-91, "Transition Fittings for Polyethylene Pipe" and Gas Design Standard B-91.1, "Polyethylene (PE) System Mechanical Fittings")

   c. Qualified personnel may join PE pipe and fittings using approved heat-iron or electrofusion joining procedures:

      - Utility Procedure TD-4170P-31, "Heat Iron Socket Fusion for Polyethylene Pipe"
      - Utility Procedure TD-4170P-32, "Heat Iron Saddle Fusion for Polyethylene Pipe (Manual)"
      - Utility Procedure TD-4170P-33, "Heat Iron Saddle Fusion for Polyethylene Pipe (Mechanical Assist Tool)"
      - Utility Procedure TD-4170P-34, "Heat Iron Butt Fusion for Polyethylene Pipe (Mechanical)"
      - Utility Procedure TD-4170P-35, "Heat Iron Butt Fusion for Polyethylene Pipe (Hydraulic)"
      - Utility Procedure TD-4170P-40, "Electrofusion for Polyethylene Pipe (Coupling)"
      - Utility Procedure TD-4170P-41, "Electrofusion for Polyethylene Pipe (Saddle)"

      Or using approved mechanical fitting installation procedures:

 ©2014 Pacific Gas & Electric Company. All Rights Reserved.

- Utility Procedure TD-4170P-50, "Mechanical Fitting Connections for Polyethylene Pipe (Stab Outlet)"
- Utility Procedure TD-4170P-52, "Mechanical Fitting Connections for Polyethylene Pipe (Threaded Compression Transitions)"
- Utility Procedure TD-4170P-53, "Mechanical Fitting Connections for Polyethylene Pipe (Bolt-On Saddle)"

d. Standard heat iron fusions are NOT allowed on Aldyl-A material. Use ONLY electrofusion or mechanical fittings with Aldyl-A material.

2. **Transitions from PE to Steel, Copper or Cast Iron**

a. Make PE-to-steel, PE-to-copper or PE-to-cast-iron transition joints using the approved transition fittings:

- Gas Design Standard B-54, "Compression Couplings"
- Gas Design Standard B-90, "Plastic System Socket and Butt Fusion Fittings"
- Gas Design Standard B-91, "Transition Fittings for Polyethylene Pipe"
- Gas Design Standard B-91.5, "Cast Iron to Polyethylene Transition Fittings."

Note: PE-to-copper transitions are for temporary repairs ONLY. All copper services must be replaced per Utility Standard TD-4801S, "Service Replacement Criteria."

i. Take precautions to protect the PE pipe at the point of transition when welding the steel end.

CAUTION

Protect the transition joint from excessive heat.

- Never shorten the steel portion of a transition fitting. Heat from welding may damage the PE pipe if the steel is cut.
- Protect the transition joint from excessive heat. Do NOT weld, thermite weld, or heat the body of the fitting; ONLY butt welding of the steel end is permitted.

During this welding, protect the PE part of the heat-fusion transition fitting from overheating by wrapping the midpoint of the steel part of the fitting with wet cloth to remove heat. Keep the cloth wet. After completing the weld, leave the wet cloth on the fitting until the steel pipe is cool enough to touch.

ii. Adequately support the plastic pipe adjacent to the transition fitting. Support the exposed PE pipe with well-compacted sand or fine soil.

3. **Riser Installation**

a. Prefabricated riser installation is described in Gas Design Standard A-91, "Prefabricated Risers." The final grade level at the riser must be at or below the red burial line indicated on the riser.

i. IF the ground slopes away from the gas service riser,

THEN straighten the 90º riser bend to match the slope. Straighten so that the vertical leg of the riser is NOT bent when installed.

ii. IF the ground slopes upward from the gas service riser,

THEN use a short, prefabricated riser and dig a deeper trench. Taper-up the slope with service tubing. Do NOT bend the riser to match the slope.

iii. Repair any coating damage on risers as described in Gas Design Standard E-25, "Field Wrapping With Cold-Applied Tape."

iv. Install sun shields on all prefabricated risers and riser kits. Shields must extend from 1" below the top of the riser or below the bypass to ground level or below.

v. Do NOT paint a sun shield.

vi. When installing prefabricated risers, use a locating wire (see Gas Design Standard A-90.3, "Locating Wire Installation for Inserted Plastic Mains and Services").

 PG&E Internal Information, SL2 ©2014 Pacific Gas & Electric Company. All Rights Reserved.

4. **Thermal Expansion**
   a. When installing PE pipe, ensure that all plastic lines are slack before completing final tie-ins to allow for thermal expansion and contraction.
5. **Leak Testing**
   a. Pipe must be pressure leak tested after installation. Follow the test requirements outlined in Gas Design Standard A-34, "Piping Design and Test Requirements."
      i. IF a new PE main or service has been installed and tested as described in Gas Design Standard A-34, but will not be immediately tied in to an existing system,

      THEN the new main or service must remain pressurized with air at 60 psig or less.

      Note: The system must be retested prior to tie-in as required in Gas Design Standard A-34.
6. **Marking New Service Installations**
   a. All new or replaced services need to have the curb (or street) marked indicating the location of the new or replaced service. Approved markings include a yellow slash mark on the curb or other as noted in Utility Procedure TD-5811P-104, "Proper Markings." This marking provides identification/location of the gas service pending the update of the service installation by mapping.
   - IF the local Municipalities or agencies have requirements that restrict marking the services,

     THEN the restriction must be noted on the GSR.

Construction Materials

1. **Pipe:**
   a. Check the production date on the pipe:
      i. Yellow medium density polyethylene (MDPE) pipe more than 3 years old must be scrapped.
      ii. Pipe and tubing that is shipped directly from the manufacturer to the job site must NOT be older than 6 months, as outlined in the following:
         - Engineering Material Specification (EMS) 2502, "Specifications for Furnishing and Delivery of Polyethylene Plastic Tubing"
         - EMS 2503, "Specifications for Furnishing and Delivery of Polyethylene Plastic Piping."
   b. Ensure that the pipe or tubing was manufactured at a Company approved plant listed in Gas Design Standard A-93 – Attachment B, "Approved PE Pipe/Tubing Manufacturers and Plants."
2. **Fittings:**
   a. Heat Fusion Fittings are described in Gas Design Standard B-90 and Gas Design Standard B-90.1
   b. Electrofusion Fittings are described in Gas Design Standard B-90.3.
   c. For PE-to-PE mechanical connections, use the approved mechanical fittings shown in the following:
      - Gas Design Standard B-90.1
      - Gas Design Standard B-91
      - Gas Design Standard B-91.1
   d. Approved transition fittings are shown in the following:
      - Gas Design Standard B-54
      - Gas Design Standard B-91
      - Gas Design Standard B-91.1
      - Gas Design Standard B-91.5
   e. IF a protective sleeve is supplied with a fitting,

      THEN the sleeve must be installed. Information on ordering additional protection sleeves, when needed, is available in Gas Design Standard B-90.2, "Polyethylene (PE) System Accessories."

 ©2014 Pacific Gas & Electric Company. All Rights Reserved.

3. **Valves:**
   a. Refer to Gas Design Standard F-90, "Polyethylene (PE) Valves" and Gas Design Standard A-90, "Plastic Main and Service Installation" for isolation valve descriptions.
   b. Excess Flow Valve (EFV) descriptions are provided in Gas Design Standard A-93.3, "Plastic Excess Flow Valves."
4. **Risers:**
   a. Specifications for prefabricated risers are detailed in Gas Design Standard A-91.
5. **Locating Wire and Electronic Marking (EMS):**
   a. Locating wire, anode, bonding requirements and electronic marking requirements are described in Gas Design Standard A-90.2, "Locating Wire Installation for Direct Burial Plastic Mains and Services" and Gas Design Standard A-90.3.

Construction Methods:

1. **Polyethylene Pipe Handling**
   a. Verify the print line on the pipe or tubing and document the date of manufacture, the manufacturer's name, and the SDR on the Plastic Pipe Inspection Data Stamp shown in Figure 3, before installation.
   b. Handle PE pipe carefully to eliminate the possibility of damage during loading, unloading, and storage operations.
      i. During transport, the pipe must be supported to minimize movement and must be located away from any source of heat, such as equipment or vehicle exhaust.
      ii. Protect pipe against ropes or other securing devices.
      iii. Chains must not be used to secure the pipe.
      iv. Supplies or other equipment must not be placed on top of the pipe.
   c. String coils of plastic pipe by hand or from a reel.
      i. Coils of 4" diameter pipe and larger must be strung from an approved trailer designed for large-diameter, coiled PE pipe as described in Gas Design Standard M-17.2, "Large Diameter PE Coil Pipe Trailers and Accessories."
      ii. Coils must NOT be rolled over sharp objects OR pulled over rough surfaces.
      iii. String straight lengths by lifting the pipe from the truck to the ground.
      iv. The pipe must be protected from rocks or other abrasive material during this operation and must NOT be dropped from a height.

WARNING

Observe proper safety precautions during field bending of pipe.
Considerable force may be required to field bend pipe.
IF the pipe is released during bending,
THEN the pipe may spring back forcibly.

      v. Coiled PE pipe is confined with bands at intervals within the coils. As the pipe is uncoiled, take precautions to avoid kinking the pipe. Do NOT uncoil the pipe faster than the bands can be cut.
   d. Carefully inspect PE pipe for kinks, gouges, scratches, punctures, and other imperfections after each of the handling operations.
   e. PE pipe must be rejected if defects or damages exceed 10% of the wall thickness of the pipe. Pipe wall thicknesses are listed in Gas Design Standard A-93, "Polyethylene Pipe Specifications and Design Considerations."

 ©2014 Pacific Gas & Electric Company. All Rights Reserved.

CAUTION

NEVER weld or thermite weld close to PE pipe without protecting the pipe with a heat-resisting baffle or wet rags.

f. Do NOT perform welding on pipe immediately adjacent to plastic pipe in order to minimize the possibility of sparks or hot material coming into contact with the plastic pipe.

2. **Control Static Charge Build-up in Polyethylene**

WARNING

Provide static grounding, in all situations where gas is present or anticipated,
The discharge of static electricity can cause shocks or ignite a gas-air mixture.

a. Static-electric charges may build up on both the inside and outside surfaces of PE pipe. Localized, static-electric buildup occurs because PE pipe does not readily conduct electricity.

   See Utility Work Procedure WP4170-01, "Grounding Polyethylene (PE) Pipe to Control Static Electricity" for static-grounding procedures and requirements.

3. **Depth of Cover for Main and Service:**

- For Gas Only trench refer to GS Interim Standard 463-4, "Cover and Clearance Requirements for Transmission Lines, Mains and Service Lines."
- For Joint trench refer to Utility Operations S5453, "Joint Trench."

4. **Polyethylene Pipe Pressure Control (Squeeze-off):**

a. Squeeze-off PE pipe to extend or repair it. PE pipe is flexible and can be squeezed shut without damaging the pipe or reducing its pressure rating, provided the proper tools and procedures are used. See Utility Work Procedure WP4170-02, "Squeezing Polyethylene (PE) Pipe" for squeeze-off procedures. Personnel are required to have the proper operator qualification (OQ) before controlling pressure using the PE pipe squeeze method.

5. **Purging Plastic Mains and Services:**

a. Remove static-electric charges by grounding the pipe whenever the pipe is purged. Refer to Utility Work Procedure WP4170-01.

b. Purge plastic mains and services according to the provisions specified in Gas Design Standard A-38, "Procedures for Purging Gas Facilities" as applicable. Personnel are required to have the proper OQ before purging pipe purging pipe.

   IF the service has an excess flow valve

   THEN follow the purging instruction in Gas Design Standard A-93.3.

6. **Gauging Requirements/Continuity of Service**

a. It is Company policy to maintain uninterrupted service to customers during the construction, reconstruction, or maintenance of facilities as described in Distribution & Customer Service (DCS) Standard D-S0454, "Gas Mains, Maintaining Continuity of Service During Construction."

 ©2014 Pacific Gas & Electric Company. All Rights Reserved.

7. **Backfill Requirements:**
   a. Bedding must provide firm, continuous support under and around the PE pipe, and provide support for spans across gaps and holes. The backfill must be free of sharp objects, rocks, and large clods. The bedding materials used for support must be well-compacted. To prevent differential settlement, take extra care to provide proper compaction under pipes and fittings at branch and transition locations. Provide imported bedding for the pipe if the trench bottom is not smooth (refer to EMS 4123, "Backfill Sand").
      i. Compact the backfill at the sides of the PE pipe. Do not compact the backfill directly over the pipe until there is at least 12" of cover. Take care when dumping backfill material on top of PE pipe service connections or transition fittings.

CAUTION

DO NOT allow cement additives such as calcium oxide (quick lime) to come into contact with PE pipe, tubing or fittings.

      ii. When using a flow-able fill, such as controlled density fill or slurry, provide a minimum of 6" of sand shading above and between the pipe and fittings.

8. **Branch Service Installation:**
   a. Install branch services as described in Gas Design Standard A-42, "Standard Branch Service Installation."
   b. The branch service must be marked at the service valve as shown in Gas Design Standard A-42.
   c. Branch services must be identified on all map records.
   d. Service orders must be issued for all services that are installed or altered.
   e. When a branch connection is made as a result of an oral consent, the record of consent must be marked on the appropriate service order for permanent filing.

9. **Change in Service Point Location (Flop Lots):**

   When a change in service point location is required, contact the local area engineer for design changes as described in Gas Design Standard A-90.

10. **Direct Burial**
    a. Place joint trench gas facilities in the distribution trench per Utility Operations S5453. Placement in a Public Utility Easement (PUE) is preferred.
    b. A warning tape is to be installed in direct-burial installations per Gas Design Standard L-16, "Gas Pipeline Underground Warning Tape."

11. **Insertion of Polyethylene Main and Service in Casing**

    Note: When inserting pipe, provide enough slack in all plastic lines before completing the final tie-in to avoid stress due to thermal expansion and contraction.

    Casing Insertion

    a. Insert plastic pipe into an existing casing by performing the following steps:
       i. Clean the casing pipe.
       ii. Ream the steel casings to protect the plastic main insert from the sharp edges of the casing. Where necessary, the entire length of the casing pipe must be reamed.
       iii. The leading edge of the plastic pipe or tubing must be sealed during insertion.
       iv. Push the plastic pipe through the casing.
       v. Evaluate the first 5' of the plastic pipe for damage as it leaves the casing pipe.

          IF there is damage that is caused by the casing pipe,

          THEN remove the plastic pipe and repair the pipe as described in the section on PE pipe repair in this Gas Design Standard.

 ©2014 Pacific Gas & Electric Company. All Rights Reserved.

b. Support exposed plastic at entry and exit points.

   i. Plug the space between the plastic and the casing pipe (see Gas Design Standard A-90) with casing plugs or cable protectors, duct seal, or other suitable means not detrimental to PE pipe.

   ii. Any Non-cased plastic pipe must be well supported with backfill.

c. Plastic pipe is approved for double insertion into existing mains and services. This application is approved provided the following conditions are met:

   i. It is not practical or economical to remove the previously inserted pipe.

   ii. The installation is made in accordance with Gas Design Standard A-75, "Gas Service and Mains in Plastic Casing" or Gas Design Standard A-90, as applicable, particularly with respect to protecting and supporting the entry and exit points.

   iii. The installation is mapped with both the casing size and casing material identified. For example, a 1/2" plastic service inserted into a 1" copper pipe that is inserted into a 2" steel line is mapped as shown in Figure 1.

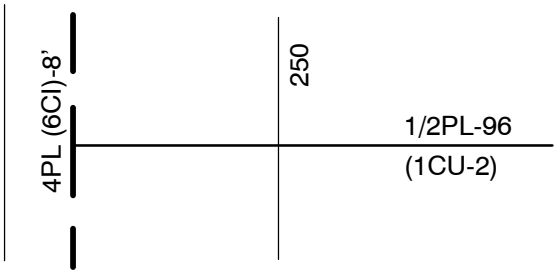

Figure 1
Mapping of a Double Insert

d. Squeezing of the outer casing is ONLY allowed in the case of an emergency. If the outer casing pipe is squeezed, the casing must be grounded. The PE gas-carrier pipe must be replaced after flow control is no longer needed.

   i. IF the outer casing is metallic (i.e., steel or copper),

   THEN ground the casing using a ground cable that is grounded to wet earth.

   ii. IF the outer casing is PE,

   THEN ground the squeezer and casing as if the casing were the carrier pipe in accordance with the provisions of Utility Work Procedure WP4170-01.

   iii. IF the casing is PVC or cast iron,

   THEN remove the casing before squeezing the carrier pipe or tubing, and ground the carrier pipe in accordance with the provisions of Utility Work Procedure WP4170-01.

e. Take special precautions when accessing the carrier pipe (window cutting) to avoid damaging it.

   IF the pipe is damaged,

   THEN the carrier pipe must be repaired by replacing the damage section of the carrier pipe.

12. **Boring or Splitting of Polyethylene Main and Service**

Note: When boring or splitting PE pipe, provide enough slack in all plastic lines before completing the final tie-in to avoid stress due to thermal expansion and contraction.

a. Ensure that the bore hole meets the 24" depth requirement for the main or service.

b. PE pipe may be pushed or pulled through a bore hole as described in the following:

- Horizontal Directional Drilling Manual
- Gas Design Standard M-70.7, "Pneumatic Piercing Tools"
- Gas Design Standard M-70.8, "Pneumatic Guided Piercing Tool"
- Utility Procedure TD-4412P-05, "Excavation Procedures for Damage Prevention"

 ©2014 Pacific Gas & Electric Company. All Rights Reserved.

c. During pipe pulling, constantly monitor the pulling force on the pipe and use a pulling head containing a weak-link or mechanical break-way as described in Gas Design Standard M-16.2, "Weak-link and Mechanical Breakaway Connectors."

d. During horizontal directional drilling (HDD) operations, the equipment gauge pressure must NOT be used to determine pulling forces on the pipe.

CAUTION

A weak-link or a mechanical break-away is critical to ensuring that PE pipe is installed without exceeding its design load.

e. Examine the pipe as it leaves the hole to determine if the speed of the pipe is smooth and continuous. Any delay in the pipe pulling may indicate that the pipe has "hung up" and has possible damage.

f. When installing PE using HDD, minimize variations in the bore to avoid adding drag when pulling back the pipe. Proper back-reaming and mudflow will help reduce the drag on PE when pulling back the pipe.

g. PE services may be replaced using Utility Procedure TD-4634P-01, "Polyethylene Service Splitting."

h. IF pipelines are installed using technologies where a casing may be required, including the following:

- HDD
- Steel pipe splitting (Gas Design Standard A-36.1, "Splitting Steel Pipe")
- Cast-iron pipe bursting

THEN it is acceptable to insert plastic pipe and tubing into a new plastic casing if the installation of the new plastic casing meets the following requirements:

i. All the current design requirements as specified in Gas Design Standard A-75 are satisfied.

ii. The newly installed products are mapped correctly. For example, the bursting of a 4" cast-iron main for the placement of a 4" plastic main into a 6" plastic casing is mapped as follows: 4 - PL (6PL).

13. **Riser Insert**

a. Before installing a service head adapter kit, inspect the PE tubing for damage.

b. Instructions for service head adapters shown in Figure 2 are detailed in Utility Procedure TD-4170P-52.

c. The plastic pipe must be supported by well-compacted sand or fine soil.

d. Refer to Gas Design Standard A-90.3 for the locating wire requirements.

e. The air gap between the outside diameter of the service casing and the inside diameter of the sun shield must be between 1/2" and 3/4".

 PG&E Internal Information, SL2 ©2014 Pacific Gas & Electric Company. All Rights Reserved.

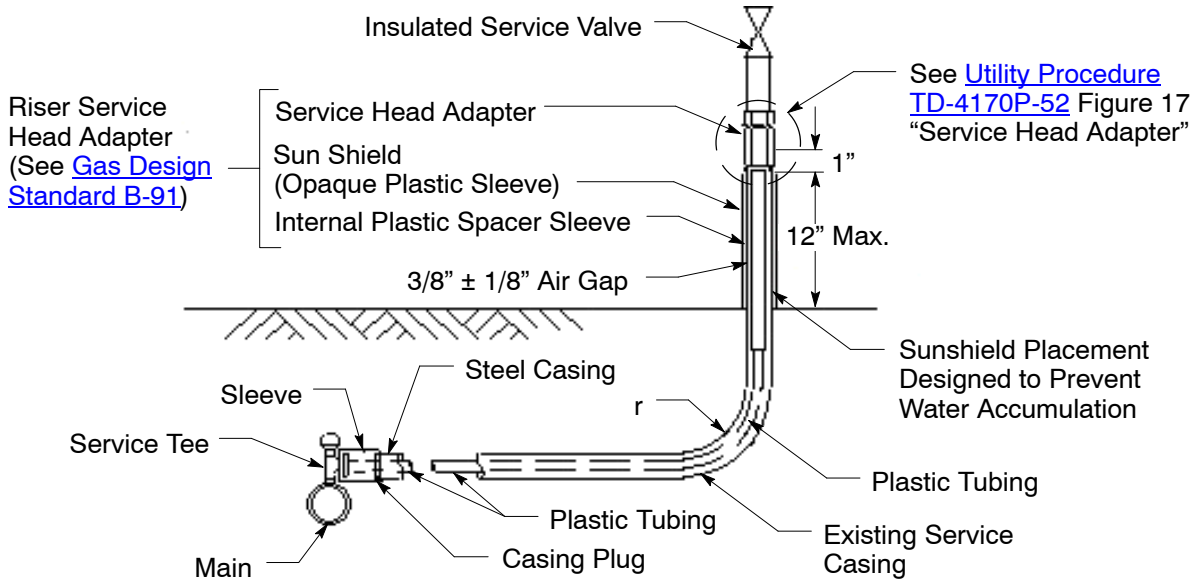

Figure 2
Typical Plastic Service Renewal

Polyethylene Pipe Repairs

Note: Permanent repairs must be completed within 30 days.

1. **Temporary Repairs with a Stainless Steel Clamp:** A temporary repair can be made if it is replaced with a permanent repair within 30 days. A full-encirclement, stainless-steel clamp may be used temporarily to repair punctures or longitudinal-type damage. These clamps do not have an internal stiffener. Follow the grounding procedure Utility Work Procedure WP4170-01 when installing stainless-steel clamps.
2. **Permanent Repairs**
   a. Make permanent repairs by replacing the damaged segment of plastic pipe.
      i. Test segments of plastic pipe that are installed to replace damaged sections of mains and services according to the provisions in Gas Design Standard A-34.
         (1) Soap test mechanical fittings and couplings during leak testing.
         (2) Soap test the repair and squeeze areas after the repair is complete.
         (3) Thoroughly rinse any areas exposed to detergents with clear water.
      ii. Clamp the exposed squeeze points on all 1-1/4" and larger Aldyl-A pipe with full-encirclement support clamps. The support clamps only provide support and are not intended for leak repair.

      Table 1 below provides information on support clamps (Aldyl-A pipe squeeze point only).

Table 1 Support Clamps for Aldyl-A

Size (Inches)	4" Wide Code	6" Wide Code
1-1/4 Continental (PVC)	024124	–
2 Continental (PVC)	033924	020588
2 Perfection (PA)	022831	–
3 Continental (PVC)	033925	020627
3 Perfection (PA)	022832	–
4 Continental (PVC)	033926	020628
4 Perfection (PA)	022840	–
6 Continental (PVC)	–	020631

 ©2014 Pacific Gas & Electric Company. All Rights Reserved.

iii. Make permanent repairs to an Aldyl-A tapping tee, with black caps, that are leaking at the cap by installing an Aldyl-A electrofusion repair kit in accordance with Utility Procedure TD-4170P-57, "Polyethylene Tapping Tee Repair Kits."

- Aldyl-A tapping tees with black caps encountered during routine work, whether leaking or not, must be repaired by removing the existing cap and installing an Aldyl-A electrofusion repair kit.

iv. Make permanent repairs to Plexco, Nipak, and Continental tapping tees with damaged caps by replacing the cap with the approved replacement caps listed in Gas Design Standard B-90.2.

v. A Performance Pipe 980 Quad Ring can be used to repair the Phillips Driscopipe old style orange resin tee (see Gas Design Standard B-90.2). The tee can be identified by the presence of a Quad Ring located at the top of the tapping tower.

3. **Repair and Test Requirements for PE Pipe Damaged by Dig-In or Other Causes**

a. Visually inspect the plastic pipe upstream and downstream from the area of contact. Replace only enough pipe to make a permanent repair. Pressure leak test plastic pipe to be used for repair on site. Leak test the replaced section according to the instructions in Gas Design Standard A-34.

b. IF the casing is damaged (broken, bent, or crushed),

THEN replace the plastic carrier pipe 2' upstream and downstream of the dig-in location.

c. **Repairing a service**:

- Refer to Utility Standard TD-4801S to determine if a service is to be repaired or replaced.
- Service lines must be pressure tested from the point of disconnection to the riser.
- In a dig-in situation:

  IF it appears that the pipe or casing was pulled or moved between the point of impact and the main,

  THEN pressure leak test the entire service at 100 psig for a minimum of 5 minutes per the instructions in Gas Design Standard A-34.

4. **Repair Requirements for Plastic-Service Inserted Risers or Prefabricated Risers for Meter Sets Exposed to or Damaged by a Fire or Excessive Heat**:

IF a PE service inserted riser or prefabricated riser may have been subjected to unusually high temperatures (such as being exposed to a house fire or meter fire),

THEN replace either the plastic insert or the entire riser.

CAUTION

Pressure testing the service is NOT sufficient when a riser has been exposed to high temperatures. The plastic piping inside the riser could be damaged even though the pipe may hold during a leak test. When the service is used on a long-term basis, it could eventually rupture.

Leak Testing

1. Only those individuals trained and qualified pursuant to the Company's Operator Qualification (OQ) program may perform leak tests.

CAUTION

Do not use the squeeze-off technique to separate gas and air during an air test.

2. Pipe must be leak tested after installation. Follow the test requirements in Gas Design Standard A-34. The minimum test duration at 100 psig is 5 minutes and the maximum test time cannot exceed 8 hours at 100 psig.

IF a new PE main or service has been installed and tested as described in Gas Design Standard A-34. but will not be immediately tied in to an existing system,

THEN the new main or service must remain pressurized with air at 60 psig or less. This system must be re-tested prior to tie-in.

 PG&E Internal Information, SL2 ©2014 Pacific Gas & Electric Company. All Rights Reserved.

Records

1. The brand name of all plastic pipe lots, footage, size and the date it was manufactured must be recorded in the permanent records. This may require multiple plastic stamps for construction drawings. Figure 3 depicts a plastic stamp for construction drawings.
   a. Note the pipe's brand and manufacturing date (MM/DD/YY format) on the foreman's copy of the completed estimate.
   b. This information will be transcribed to the file copy.
   c. Record the brand, footage, size and manufacturing date (MM/DD/YY format) of pipe used for service installations in the "Remarks" section of the Gas Utility Form F5458-1, "Gas Service Record," or the Gas Utility Form TD-4110P-03-F01, "Leak Repair, Inspection, and Gas Quarterly Incident Report," as appropriate.
   d. See A-93 Attachment B, "Approved PE Pipe/Tubing Manufacturers and Plants" for a description of print line information.

Plastic Pipe Data			
TEST AT 100-110 PSI FOR MINIMUM OF 5 MIN			
Pressure	Duration	Initials	Date of Test
Plastic Pipe Data			
Footage and Size		_____/_____	
SDR / Wall Thickness		_____	
Pipe Manufacture		_____	
Date Manufactured		_____	
☐ PE 2406/2708		☐ Other PE:	
Footage and Size		_____/_____	
SDR / Wall Thickness		_____	
Pipe Manufacture		_____	
Date Manufactured		_____	
☐ PE 2406/2708		☐ Other PE:	
Foreman LAN ID: _____		Date: _____/_____/_____	
Foreman Signature: _____			
List all plastic pipe by footage, size, manufacture and date manufactured per Gas Design Standard A-93.1			

Figure 3
Plastic Pipe Stamp

 ©2014 Pacific Gas & Electric Company. All Rights Reserved.

Target Audience

Gas distribution engineers, gas planners, estimators, new business inspectors, maintenance and construction crews, materials inspectors, and personnel involved in PE pipe connection training and qualification

Definitions

Imported Backfill: Soils or man-made materials not native to the specific trench location for use in backfill. These materials will ensure that required compaction is achieved. See EMS 4123, for specific bedding and backfill requirements.

Leak Test: Field testing of a piping system using air and applying pressure to determine if leaks exist in the system. This test is used to verify that plastic systems can hold 1.5 times the maximum allowable operating pressure of 60 psig.

Stub Service: Service tubing and conduit extended from distribution facilities to provide for a future service completion.

2406: Pipe designation for medium density polyethylene pipe (MDPE) equivalent in our system to 2708.

2708: Pipe designation for medium density polyethylene pipe (MDPE) equivalent in our system to 2406.

Acronyms and Abbreviations

NA

Compliance Requirement/Regulatory Commitment

Installation of plastic pipe	49 CFR 192.321

References

Piping Design and Test Requirements	A-34
Splitting Steel Pipe	A-36.1
Procedures for Purging Gas Facilities	A-38
Standard Branch Service Installation	A-42
Gas Service and Mains in Plastic Casing	A-75
Plastic Main and Service Installation	A-90
Locating Wire Installation for Direct Burial Plastic Mains and Services	A-90.2
Locating Wire Installation for Inserted Plastic Mains and Services	A-90.3
Prefabricated Risers	A-91
Polyethylene Pipe Specifications and Design Considerations	A-93
Approved PE Pipe/Tubing Manufacturers and Plants	A-93 – Attachment B
Plastic Excess Flow Valves	A-93.3
Compression Couplings	B-54
Plastic System Socket and Butt Fusion Fittings	B-90
Plastic System Saddle Fittings	B-90.1
Polyethylene (PE) System Accessories	B-90.2
Electrofusion Fittings and Tapping Tees	B-90.3
Transition Fittings for Polyethylene Pipe	B-91
Polyethylene (PE) System Mechanical Fittings	B-91.1
Cast Iron to Polyethylene Transition Fittings	B-91.5
Qualifications for Joining Plastic Pipe	D-34
Field Wrapping With Cold-Applied Tape	E-25
Meter Valves	F-80
Polyethylene (PE) Valves	F-90
Gas Pipeline Underground Warning Tape	L-16
Weak-link and Mechanical Breakaway Connectors	M-16.2
Large Diameter PE Coil Pipe Trailers and Accessories	M-17.2
Pneumatic Piercing Tools	M-70.7
Pneumatic Guided Piercing Tool	M-70.8

 PG&E Internal Information, SL2 ©2014 Pacific Gas & Electric Company. All Rights Reserved.

References, continued

Gas Mains, Maintaining Continuity of Service During Construction	D-S0454
Specifications for Furnishing and Delivery of Polyethylene Plastic Tubing	EMS 2502
Specifications for Furnishing and Delivery of Polyethylene Plastic Piping	EMS 2503
Backfill Sand	EMS 4123
Gas Service Record	F5458-1
Cover and Clearance Requirements for Transmission Lines, Mains and Service Lines	GS I.S. 463-4
Joint Trench	S5453
Leak Repair, Inspection, and Gas Quarterly Incident Report	TD-4110P-03-F01
Heat Iron Socket Fusion for Polyethylene Pipe	TD-4170P-31
Heat Iron Saddle Fusion for Polyethylene Pipe (Manual)	TD-4170P-32
Heat Iron Saddle Fusion for Polyethylene Pipe (Mechanical Assist Tool)	TD-4170P-33
Heat Iron Butt Fusion for Polyethylene Pipe (Mechanical)	TD-4170P-34
Heat Iron Butt Fusion for Polyethylene Pipe (Hydraulic)	TD-4170P-35
Electrofusion for Polyethylene Pipe (Coupling)	TD-4170P-40
Electrofusion for Polyethylene Pipe (Saddle)	TD-4170P-41
Mechanical Fitting Connections for Polyethylene Pipe (Stab Outlet)	TD-4170P-50
Mechanical Fitting Connections for Polyethylene Pipe (Threaded Compression Transitions)	TD-4170P-52
Mechanical Fitting Connections for Polyethylene Pipe (Bolt-On Saddle)	TD-4170P-53
Polyethylene Tapping Tee Repair Kits	TD-4170P-57
Excavation Procedures for Damage Prevention	TD-4412P-05
Polyethylene Service Splitting	TD-4634P-01
Service Replacement Criteria	TD-4801S
Proper Markings	TD-5811P-104
Grounding Polyethylene (PE) Pipe to Control Static Electricity	WP4170-01
Squeezing Polyethylene (PE) Pipe	WP4170-02
Electric & Gas Service Requirements (Greenbook)	
Gas Applicant Design Manual	
Horizontal Directional Drilling Manual	

Appendices

NA

Attachments

NA

 ©2014 Pacific Gas & Electric Company. All Rights Reserved.

Revision Notes

Revision 09 has the following changes:

1. Revised Gas Design Standard A-90 and Gas Design Standard A-93.1 to organize all design information for plastic pipe system in Gas Design Standard A-90 and construction information into Gas Design Standard A-93.1. Pipe sizing, installation depth, location from structures and other design information was removed from Gas Design Standard A-93.1 and placed into Gas Design Standard A-90 revision 6.
2. The title of A-93.1 has been changed from “Plastic Gas Distribution System Construction and Maintenance” to “Installing and Maintaining a Polyethylene Gas Distribution System”.
3. Added reference to 49 CFR 192.321 in scope.
4. Updated reference documents where required.
5. Added requirement in the General Information Section that new service locations be marked after installation to identify the new service location until maps are updated.
6. Added marking requirements for service construction as referenced in Utility Procedure TD-5811P-104.
7. Removed language for locating wire and EMS requirements and added reference to Gas Design Standard A-90.2 and Gas Design Standard A-90.3.
8. Removed information about controlling static charge build up already covered in the required Utility Work Procedure WP4170-01.
9. Removed information about PE pipe squeeze-off currently covered in the required Utility Work Procedure WP4170-02.
10. Instructions were added to the purging section to refer to Gas Design Standard A-93.3 when purging an excess flow valve.
11. Removed the static grounding procedure from “Purging” section and referred to Utility Work Procedure WP4170-01.
12. Added gauging/continuity of service reference for DCS Standard D-S0454.
13. Revised Standard Branch Service Installation to refer to Gas Design Standard A-42. When a branch connection is made as a result of an oral consent, the record of consent must be marked on the appropriate service order for permanent filing.
14. Added reference to warning tape requirements in direct bury installations, Gas Design Standard L-16.
15. Detail of weak-link and mechanical break-away instructions were removed from Gas Design Standard A-93.1 and placed into Gas Design Standard M-16.2.
16. Removed repair method for 10% gouge on pipe using a service saddle.
17. Added new permanent repair requirements for tapping tees.
18. Revised Plastic Pipe Stamp (Figure 3) to add pipe SDR/wall thickness.
19. Added reference information to Utility Standard TD-4801S to determine if a service is to be repaired or replaced.

Asset Type: Distribution
Function: Distribution Construction and Maintenance
Gas Design Standard Contact: **Gas Design Standard Responsibility List**

 PG&E Internal Information, SL2 ©2014 Pacific Gas & Electric Company. All Rights Reserved.

See Utility Bulletin TD-4170B-013

GAS DESIGN STANDARD
POLYETHYLENE EXCESS FLOW VALVES

A-93.3

Publication Date: 02-04-15 **Effective Date:** 05-31-15 **Rev.** 07

Purpose and Scope

This Gas Design Standard (GDS) provides use and design information for selecting, installing, maintaining, and documenting a polyethylene (PE) Excess Flow Valve (EFV). Supplements to this GDS may be found in the manufacturer's product manuals and catalogs, and in the documents listed in the "References" section.

Note: The word pipe in this standard applies to pipe and tubing.

General Information

1. Only personnel with a current GDS D-34, "Qualifications for Joining Plastic Pipe" may install an EFV.
2. EFVs are spring operated and control the flow of gas through a service line when the flow exceeds a predetermined rate. EFVs offer protection when a gas service line is severed due to a dig-in.
3. EFVs must perform to the requirements of Code of Federal Regulations 49 (CFR) 192.381, "Service lines: Excess flow valve performance standards."
   - All EFVs must meet the requirements of ASTM F-1802, "Standard Test Method for Performance Testing of Excess Flow Valves" and ASTM F-2138, "Standard Specification for Excess Flow Valves for Natural Gas Service."
   - All EFVs supplied with mechanical ends must meet the requirements listed in Engineering Material Specification (EMS) 4761, "Specifications for Furnishing and Delivery of Non-Corrodible Mechanical Fittings for Polyethylene (PE) Plastic Gas Piping and Tubing."
4. In general, the pipe size on the ends of EFV fittings and the service pipe must be the same.
   - IF an EFV size different than the service pipe size is to be used,
     THEN an exception must be granted by the document owner.
5. Polyethylene EFVs do not require cathodic protection.
6. Do NOT squeeze an EFV.

Applications for EFVs

1. EFVs are required to be installed on all new, replaced, repaired, altered, and transferred services in the following situations (Examples in Table 1, "EFV Installation and Replacement Matrix"):
   - The service feeds a small commercial customer(s) with a total connected load up to 1,400 standard cubic feet per hour (scfh).
   - The service feeds a multi-unit residential customer(s) (including duplexes, triplexes and four-plexes) with a total connected load up to 1,400 scfh.
   - The service feeds a single-family home with a total connected load up to 5,000 scfh.
   - The residential service is branched (serving two single meters) and has a combined total connected load up to 5,000 scfh.

Note: Farm Tap Regulator Sets: For service lines fed by the Farm Tap sets, install the EFV downstream of the Farm Tap. See GDS H-10, "High-Pressure Regulator-Type Stations and Farm Tap Regulator Sets."

2. Do NOT install an EFV in the following situations:
   - The service is on a low-pressure (less than 1 pound per square inch gauge [psig]) system.
   - The service is 3 inch diameter or larger.
   - The repair or alteration occurs more than 3 feet from the main.
   - The repair does not require the service to be disconnected from the main (e.g. tee cap replacement).
   - The maximum allowable operating pressure (MAOP) of the service is greater than 60 psig.

 ©2015 Pacific Gas & Electric Company. All Rights Reserved.

Table 1 EFV Installation and Replacement Matrix

Scenario	EFV Installed	Action	Charge To
Customer requests new gas service, and a new single service is installed	NO	Engineered job. Install a new EFV with the appropriate capacity	New Business
Customer adds load to a single service, and the service is completely replaced	YES		
	NO		
Customer adds load to a single service, and the service is altered to accommodate load	YES	Check the EFV's capacity and replace it if the capacity is inadequate	New Business
	NO	Install a new EFV if the alteration is within 3 feet of the service tee/saddle	New Business
Customer adds load, no service reinforcement work is performed	YES	Check the EFV's capacity and replace it if the capacity is inadequate [1]	New Business
	NO	No EFV installation is required	NA
Customer requests service to serve new or existing load and PG&E branches off an existing service	YES	Check the EFV's capacity and replace it if the capacity is inadequate	New Business
	NO	Engineered job. Install a new EFV with the appropriate capacity on the mother service near the tee	New Business
Customer requests service to serve the new or existing load, and PG&E installs a multi-meter manifold with one or more additional meters	YES	Check the EFV's capacity and replace it if the capacity is inadequate [2]	New Business
	NO	Install a new EFV [2]	NA
Developer does a lot flop, and PG&E deactivates the old stub and installs new service at the new service point	YES	Engineered job. Install a new EFV with the appropriate capacity	WRO [3]
	NO		
Customer requests an EFV on an existing plastic	NO	Engineered job (service alteration). Install a new EFV [1]	WRO [3]
The EFV is leaking or has failed	YES	Replace the EFV	Maintenance
GPRP, reliability, or capacity job where service is replaced as part of the job	YES	Engineered job. Install a new EFV with the appropriate capacity	Capital Job
	NO		Capital Job
GPRP, reliability, or capacity job where service is transferred as part of the job	YES	Install a new EFV or leave in place the existing EFV	Capital Job
	NO	Engineered job. Install a new EFV with the appropriate capacity	Capital Job
Existing service cut off at property line by PG&E to facilitate work by customer, and reconnected later	YES	Same load: leave current EFV	NA
		Added load: check EFV capacity and replace it if the capacity is inadequate	WRO [3]

[1] IF the service size is increased to meet the EFV maximum protected service line limitation, THEN bill the applicant under New Business or work at the request of others (WRO), as appropriate.
[2] An EFV is required if the total connected load is less than 1,400 scfh.
[3] Reimbursable WRO.

 PG&E Internal Information, SL2 ©2015 Pacific Gas & Electric Company. All Rights Reserved.

Table 1 EFV Installation and Replacement Matrix, continued

Scenario	EFV Installed	Action	Charge To
Existing service cut off at property line by PG&E to facilitate work by customer, and reconnected later	NO	No EFV installation is required	NA
Commercial customer requests service to serve new or existing load at or less than 1,400 SCFH	YES	Engineered job. Install a new EFV with the appropriate capacity	New Business
	NO		
Commercial customer increases load from at or less than 1,400 SCFH to more than 1,400 SCFH	YES	Check the EFV's capacity and remove it if the capacity is inadequate	WRO [3]
	NO	No EFV installation is required	NA

[1] IF the service size is increased to meet the EFV maximum protected service line limitation, THEN bill the applicant under New Business or work at the request of others (WRO), as appropriate.
[2] An EFV is required if the total connected load is less than 1,400 scfh.
[3] Reimbursable WRO.

Polyethylene EFV Selection

Estimating Instructions

1. Determine if the proposed new or replacement service requires the installation of an EFV as described in "Applications for EFVs."
2. Size the EFV based on total connected load per Utility Procedure TD-9500P-10, "Customer Load Study," and service length. Use the total connected load to select the proper size and flow model EFV using Table 2, "EFV Selection by Meter and Service Length."

Table 2 EFV Selection by Total Connected Load and Service Length

	Total Connected Load (scfh)						
Length (ft) [1]	**0 – 385**	**386 – 595**	**596 – 700**	**701 – 900**	**901 – 1,400 [2]**	**1,401 – 2,340 [2]**	**2,341 – 5,000 [2]**
0 – 28	1/2" – 400 1" – 800	1/2" – 600 1" – 800	1/2" – 800 1" – 800	1" – 1100	1" – 1800	1-1/4" – 2600	2" – 5500
29 – 45	1/2" – 400 1" – 800	1/2" – 600 1" – 800	1" – 800	1" – 1100	1" – 1800	1-1/4" – 2600	2" – 5500
46 – 122	1/2" – 400 1" – 800	1" – 800	1" – 800	1" – 1100	1" – 1800	1-1/4" – 2600	2" – 5500
123 – 261	1" – 800	1" – 800	1" – 800	1" – 1100	1-1/4" – 2600	1-1/4" – 2600	2" – 5500
262 – 960	1" – 800	1" – 800	1" – 800	1-1/4" – 2600	1-1/4" – 2600	1-1/4" – 2600	2" – 5500
961 – 1,000	1" – 800	1" – 800	1" – 800	2" – 5500	2" – 5500	2" – 5500	2" – 5500
1,001 – 2,560	2" – 5500	2" – 5500	2" – 5500	2" – 5500	2" – 5500	2" – 5500	2" – 5500

[1] The length for a branch service is equal to the distance from the main to the furthest meter.
[2] EFVs not required for commercial or multi-unit residential services with total connected loads greater than 1,400 scfh.

 ©2015 Pacific Gas & Electric Company. All Rights Reserved.

3. Install a larger service if the proposed service length exceeds the maximum protected service length for a specified EFV. The maximum service length for each size pipe and EFV is shown in Table 3, "EFV Capacities and Maximum Service Lengths."
4. Use Table 3, "EFV Capacities and Maximum Service Lengths," to determine if an existing EFV meets the increased load requirements for added load to an existing service line.

Table 3 EFV Capacities and Maximum Service Lengths [1]

Size	EFV Series	Maximum Total Connected Load [2] (scfh)	Maximum Service Length (ft)
1/2" CTS	400	385	122
1/2" CTS	600	595	45
1/2" CTS	800	700	28
1" CTS	800	700	1,000
1" CTS	1,100	990	261
1" CTS	1,800	1,620	122
1-1/4" IPS	2,600	2,340	960
2" CTS	5,500	5,000	2,560

[1] Based on 10 psig main pressure (APD minimum design pressure).
[2] Combined load of all connected customer equipment that could operate simultaneously.

5. IF the total connected load is unknown,
   THEN use the load equal to the maximum continuous capacity of the meter listed in GDS J-10.1, "Diaphragm Meter Capacities" and GDS J-20, "Rotary Meter Capacity – At Standard and Elevated Delivery Pressure." Take delivery pressure into account when determining the maximum continuous capacity.
6. IF there is more than one meter,
   THEN add the maximum continuous capacities of all connected meters together.
7. Fill out the EFV section of the Gas Service Record (GSR), Utility Procedure TD-9500P-14, "Gas Service Records." Indicate the EFV brand, connection type, size, and flow series, and material on the GSR.
   - IF an EFV is not installed,
     THEN indicate the reason on the GSR.
8. EFV model descriptions and material code numbers are listed in Table 4 and Table 5.

Table 4 Model Descriptions and Material Code Numbers for Perfection EFVs with Permasert Ends

Flow Series	Size (Inches)	Type of Valve Ends	Approximate Pressure Drop (psig)	Material Code
Perfection Low Flow Series 400	1/2 CTS	Permasert Ends	0.75	020948
Perfection Low Flow Series 600	1/2 CTS	Permasert Ends	1.90	447383
Perfection Medium Flow Series 800	1/2 CTS	Permasert Ends	1.40	020950
Perfection Medium Flow Series 800	1 CTS	Permasert Ends	1.40	020953
Perfection Medium Flow Series 1100	1 CTS	Permasert Ends	3.00	021706
Perfection High Flow Series 1800	1 CTS	Permasert Ends	3.20	020956
Perfection Ultra High Flow Series 2600	1-1/4 IPS	Permasert Ends	4.90	021709
Perfection Ultra High Flow Series 5500	2 IPS	Permasert Ends	0.50	021710
Extra Metal Tags for EFVs				020957

 PG&E Internal Information, SL2 ©2015 Pacific Gas & Electric Company. All Rights Reserved.

Table 5 Model Descriptions and Material Code Numbers for Perfection EFVs with Plain Pipe Ends

Flow Series	Size (Inches)	Type of Valve Ends	Approximate Pressure Drop (psig)	Material Code
Perfection Low Flow Series 400	1/2 CTS	Plain Pipe Ends	0.75	022896
Perfection Low Flow Series 600	1/2 CTS	Plain Pipe Ends	1.90	022929
Perfection Medium Flow Series 800	1/2 CTS	Plain Pipe Ends	1.40	022916
Perfection Medium Flow Series 800	1 CTS	Plain Pipe Ends	1.40	022917
Perfection Medium Flow Series 1100	1 CTS	Plain Pipe Ends	3.00	022918
Perfection High Flow Series 1800	1 CTS	Plain Pipe Ends	3.20	022921
Perfection Ultra High Flow Series 2600	1-1/4 IPS	Plain Pipe Ends	4.90	022923
Perfection Ultra High Flow Series 5500	2 IPS	Plain Pipe Ends	0.50	022928
Extra Metal Tags for EFVs				020957

EFV Field Installation Instructions

1. Install the EFV adjacent to the gas main as follows:
   - On 1/2” and 1” CTS services install a short section of pipe (approximately 8” – 12” long) between the service tee and the EFV.
   - For 1-1/4” and 2” IPS services, install a short section of pipe (approximately 15” – 18” long) between the service tee and EFV.
   - For a branch service, the EFV must be installed on the mother service, adjacent to the gas main and be of sufficient capacity to serve the combined total connected load of both residences.
   - When connecting an EFV to an electrofusion tee with a pup, connect the EFV to the pup without adding any additional pipe.
   - **Farm Tap Regulator Sets:** For service lines fed by farm tap regulator sets, install the plastic EFV approximately 3 feet from the steel-to-plastic transition fitting downstream of the farm tap regulator set. Include an EMS marker with the EFV to allow for future locating in the event the EFV must be replaced or removed. See GDS H-10.
2. IF a new service has large amounts of debris in the line,
   THEN remove debris from the service line before installing an EFV.

CAUTION

An EFV installed with the flow direction going the wrong way,
will flow normally, but will not activate.

3. Install the EFV in the horizontal position and ensure the directional arrow is in line with the flow of the gas and pointing toward the gas meter.

   Note: The EFV can be installed at an angle or in a vertical position when necessary if there is no debris that will interfere with the EFV.

   - Adhesive stickers on EFVs are color-coded. Table 6, “Perfection EFV Models with Color Identification,” lists the color-coded flow model and flow direction of the EFV.
   - Perfection molds the arrow into the body of all EFVs. This allows the installer to identify the proper flow direction if the label is damaged or missing.

 ©2015 Pacific Gas & Electric Company. All Rights Reserved.

Table 6 Perfection EFV Models with Color Identification

EFV Model	Color Coded
Low Flow Series 400	Blue
Medium Flow Series 600	Tan
Medium Flow Series 800	Orange
Medium Flow Series 1100	Grey
High Flow Series 1800	Green
Ultra High Flow Series 2600	Pink
5500 Series	White

4. Direct bury the EFV. No valve frame or cover is required.
5. The EFV is supplied with a small metal identification tag and an adhesive sticker.
   - Use the nylon tie supplied to install the metal tag.
   - Install the metal tag on the gas service riser at the gas service valve location.
   - Install the adhesive sticker on the gas riser sun shield or pressure regulator.
   - For branch services, place the metal tag and adhesive sticker on the mother service. Follow GDS A-42, "Standard Branch Service Installation," for additional branch marking requirements.
6. Stub services: Install EFVs on new stub services adjacent to the gas main.
   A. Leave the metal tag and adhesive sticker in the EFV plastic bag.
   B. Wrap the bag around the buried stub.
   C. When the service is completed, attach the tag and sticker at the riser.
   D. When performing a stub completion ensure that a properly sized EFV is present if required.
      - IF an EFV must be installed
        THEN the service connection will need to be dug up at the main so the EFV can be installed adjacent to the gas main.
7. Indicate the location of the EFV on the "as-built" GSR. Verify and indicate the brand (e.g. Perfection), connection type (i.e. mechanical, socket, electrofusion), flow series (i.e. 800, 1100, 1800, etc.), material, and size on the GSR.
   - IF an EFV is not installed,
     THEN indicate reason on the GSR.
8. Charge any repairs or replacements of EFVs due to failure or leakage to orders established under Major Work Category FH – Maintenance of Services (excluding leak repairs).
   - Save all failed EFVs and submit a "Material Problem Report" as required by Utility Standard SCM-2106S, "Material Problem Reporting (MPR) Standard."

Leak Testing

1. EFVs must be air tested as required for PE pipe systems in GDS A-34, "Piping Design and Test Requirements."
2. Increase the air pressure slowly when testing a service line with an EFV. A high flow may cause the EFV to trip.
   - For example: Take 15 seconds to pressurize a typical 50' – 100' service of 1/2" CTS or 1" CTS.
3. Depressurize the service at a slow flow rate due to possible activation.

 PG&E Internal Information, SL2 ©2015 Pacific Gas & Electric Company. All Rights Reserved.

Purging Gas Services with an EFV

1. Gas Services with an EFV require a slower purge velocity than the normal gas purge procedure described in GDS A-38, "Procedures for Purging Gas Facilities."

CAUTION

Do not use the EFV as a means of pressure control on the service in lieu of stopcock changer equipment, squeezers, or pinning off the service tee.

2. Confirm that there is an EFV identification tag on the gas service valve, riser, the riser sun shield, or pressure regulator. If the tag is present, an EFV is installed on the service.
3. Open the gas service valve very slowly and only partially.

   Note: IF the valve is fully opened,
   THEN the resulting rapid flow of gas will activate the EFV.

   - The EFV may activate when purging to atmosphere even if the gas valve is opened slowly.
   - IF the EFV activates during purging,
     THEN shut off the gas service valve and wait until the pressure equalizes. Attempt to re-purge.
4. When performing service work after the regulator at the meter set, removing a plug or associated piping too quickly can create a pressure spike and activate the EFV.
   - IF the EFV activates,
     THEN shut off the service valve and wait for the pressure to equalize.

   Note: A typical EFV usually takes approximately 5 minutes to equalize.

 ©2015 Pacific Gas & Electric Company. All Rights Reserved.

Target Audience

Gas planners, estimators, new business inspectors, gas distribution engineers, maintenance and construction, general construction, contractors, applicant designers, materials inspectors, and personnel involved in PE pipe connection training and qualification

Definitions

Branch service: A service line that is not connected to a gas main, and has another service line as its source of supply.

Farm Tap Regulator Set: A pressure regulator set, including both single and multiple stages of pressure regulation, which controls pressure to a service line.

Maximum Continuous Capacity: The maximum flow rates at which the diaphragm meters should be operated on a frequent or continuous basis in standard cubic feet per hour (scfh). At standard delivery metering pressure of 7" WC, the maximum continuous capacity established by PG&E is based on the meter capacity with a 1.0" WC differential across the meter. At elevated gas metering delivery pressure of 1.0 psig and greater, the maximum continuous capacity at higher metering pressures is based on the meter capacity with a 2.0" WC differential pressure across the meter.

Total Connected Load: Total demand of all gas appliances operating simultaneously and at full capacity.

Acronyms and Abbreviations

APD: abnormal peak day
ASTM: American Society for Testing and Materials
CFR: Code of Federal Regulations
CTS: copper tubing size
EFV: excess flow valve
EMS: engineering material specifications
GDS: Gas Design Standard
GSR: gas service record
IPS: iron pipe size
PE: polyethylene
psig: pounds per square inch gauge
scfh: standard cubic feet per hour
WC: water column
WRO: work at the request of others

Compliance Requirement/Regulatory Commitment

Service lines: Excess flow valve performance standards . . . . . 49 CFR 192.381
Excess flow valve installation . . . . . 49 CFR 192.383

References

Piping Design and Test Requirements A-34
Procedures for Purging Gas Facilities A-38
Standard Branch Service Installation A-42
Steel Excess Flow Valves (EFV) A-45
Typical Direct-Burial Plastic Main and Service Installation . . . . . A-90 – Attachment 1
Polyethylene (PE) System Mechanical Fittings B-91.1
Qualifications for Joining Plastic Pipe D-34
High-Pressure Regulator-Type Stations and Farm Tap Regulator Sets H-10
Diaphragm Meter Capacities J-10.1
Rotary Meter Capacity – At Standard and Elevated Delivery Pressure J-20
Specifications for Furnishing and Delivery of Non-Corrodible Mechanical Fittings for Polyethylene (PE) Plastic Gas Piping and Tubing . . . . . EMS 4761
Material Problem Reporting (MPR) Standard SCM-2106S
Mechanical Fitting Connections for Polyethylene Pipe (Stab Outlet) TD-4170P-50
Customer Load Study TD-9500P-10
Gas Service Records TD-9500P-14

 PG&E Internal Information, SL2 ©2015 Pacific Gas & Electric Company. All Rights Reserved.

References, continued

Standard Test Method for Performance Testing of Excess Flow Valves . . . . . ASTM F-1802
Standard Specification for Excess Flow Valves for Natural Gas Service . . . . . ASTM F-2138

Appendices

NA

Attachments

Sizing EFVs in the Field (1/2" and 1") . . . . . A-93.3 – Attachment 1

Revision Notes

Revision 07 has the following changes:

1. Added requirement that EFVs be installed on new or entirely replaced branch and multi-family residential and/or commercial services with loads up to 1,400 scfh.
2. Created section defining services requiring EFVs.
3. Added requirement that EFVs be installed on replacements and certain repairs.
4. The EFV can be selected using the meter maximum continuous capacity to estimate the customer load.
5. Added Table 4 and Table 5 listing new Perfection 600 EFV and Perfection EFVs with plain pipe ends.
6. Revised Table 1 "EFV Installation and Replacement Matrix" to incorporate the expanded EFV requirements.
7. Revised Table 2 "EFV Selection by Total Connected Load and Service Length" to include new perfection 600 EFV and base total connected load around meter capacities.
8. Removed mapping instructions for EFVs.
9. This GDS incorporates and cancels Gas Information Bulletin (GIB) 323, "Excess Flow Valve (EFV) Installation and Reporting," dated 02/12/2010.

Asset Type: Distribution Services
Function: Design, Construction, Maintenance and Operation
GDS Contact: **Gas Design Standards Responsibility List**

 ©2015 Pacific Gas & Electric Company. All Rights Reserved.

Purpose and Scope

This gas design standard outlines the requirements to comply with applicable federal and state codes when installing gas meter sets for residential and commercial premises.

This document includes definitions, references, and standard designs to comply with the regulations and codes for gas meter set locations. Local jurisdictions may have adopted codes and ordinances relating to customer facilities that could require consideration when designing gas meter sets. Compliance with applicable federal and state codes is mandatory for PG&E ("Company") facilities. Compliance with local codes is mandatory for customer facilities.

General Information

Applicability

Per Gas Rule 16, "Gas Service Extensions," all gas meter set equipment must be located at some protected location on Applicant's premises as approved by the Company. **PG&E is responsible for the design and final approval of the location for metering facilities. The preferred meter set location is outside and adjacent to the building being served.** Customers need to submit the requested meter set location with the application early in the planning stage to avoid delays.

New or customer requested relocated meter sets must be installed in compliance with current regulations, standards, and codes.

Existing meter sets may be repaired, altered, or rebuilt in their existing location provided the clearance requirements meet or are brought up to current standards.

These requirements do not mandate retroactive compliance of existing meter sets unless unsafe conditions exist as determined by the Company.

1. Applicable Regulations and Codes

   Listed below are the pertinent excerpted Title 49 Code of Federal Regulations (49 CFR) that apply to gas meter set locations:

   Title 49 CFR 192.353 - Customer Meters and Regulators: Location

   Title 49 CFR 192.355 - Customer Meters and Regulators: Protection From Damage

   Title 49 CFR 192.357 - Customer Meters and Regulators: Installation

   Title 49 CFR 192.363 - Service Lines: Valve Requirements

   Title 49 CFR 192.365 - Service Lines: Location of Valves

 ©2013 Pacific Gas & Electric Company. All Rights Reserved.

2. Definitions

Breezeway – A passage or walkway that may or may not have a roof covering and is adequately ventilated to the outside atmosphere.

Cabinet – A structure, not deeper than 36", with a solid or closed top that is freestanding, attached or recessed into a building exterior wall, vapor proof from the building, with access doors for the purpose of containing/protecting a gas meter set or meter set components.

Enclosure – A structure with an open top that is freestanding or attached to a building exterior wall with access doors; a cage; or walls and gate for the purpose of containing/protecting a gas meter set or meter set components.

Gas Meter Room – A space within a building that is solely used to house natural gas metering equipment in accordance with Gas Design Standard J-16, "Gas Meter Room."

Meter Set – The gas meter, service regulator, overpressure protection devices, and all associated Company piping and fittings between the service riser valve and the customer houseline.

Readily Accessible Location –

- For a gas meter set: The preferred location can be accessed immediately and does not require contact with the owner or occupant. If the preferred location is unavailable, the Company may approve a lock box with key for access.
- For a service shut-off valve: The preferred location is outside and aboveground. If the preferred location is unavailable, the Company may approve a curb valve in which no permanent structure prevents immediate valve access or operation.

Show Window – A ground floor window in the wall of a commercial building, including any permanent elevated display floors or platforms associated with the window, where the purpose of the window is to present a display to the public.

Source of Ignition – As defined by the National Fuel Gas Code Handbook, sources of ignition are defined as "devices or equipment that, because of their intended modes of use or operation, are capable of providing sufficient thermal energy to ignite flammable gas-air mixtures." This includes electric wiring, switches, and circuit breakers that do not meet the requirements of the National Electric Code for installation in Class 1, Division 2 areas.

3. Requirements

The following requirements comply with the regulations and codes:

A. General Meter Set Requirements

(1) Meter Set Locations - General

Listed in order of preference, as follows:

(a) Meter set located outside a building: See Item 3B for specific requirements.

(b) Meter set located outside in an alcove or enclosure: See Item 3B for specific requirements.

(c) Meter set located in a breezeway: See Item 3C for specific requirements.

(d) Meter set located in a cabinet: See Item 3D for specific requirements.

[(e) and (f) will only be considered by the Company when (a) – (d) are not available]

(e) Meter set located in a buried vault, pit, or box: See Item 3E for specific limitations and requirements.

(f) Meter set (excluding service shutoff valve) located inside a building in a gas meter room: See Item 3F for specific requirements.

 ©2013 Pacific Gas & Electric Company. All Rights Reserved.

(2) Prohibited Meter Locations

Gas meter sets must not be located in inaccessible areas, such as:

(a) rooftops,

(b) garages,

(c) crawl spaces,

(d) inside buildings without a dedicated gas meter room designed in accordance with Gas Design Standard J-16; or

(e) under display platforms or show windows (with or without enclosures or cabinets).

(3) SmartMeter™ Requirements

The SmartMeter™ Advanced Meter Reading system uses a wireless radio frequency (RF) communication network to transmit gas meter reads automatically. To minimize the potential of RF signal transmission interference, gas meters should not be located:

(a) In a cabinet or enclosure made of metal or with a metal door.

(b) In close proximity (6-inches or less) of any metallic pipe, conduit, communications wire, TV cable, electric wire or box.

(c) Within 5 feet of a large metal object such as HVAC duct, steel cabinet, refuse container or metal ceiling.

(d) With less than a 6 inch clearance between the meter and the established, finished grade.

(4) Gas Meter Working Space

Gas meter locations must be selected to allow for a minimum clear and level working space of 3 feet in front of the meter, with 2% or less grade, 78 inches high and 48 – 54 inches wide, depending on the meter size. (Figure 1 and Figure 2) For a large meter set or multi-meter manifold this working space will extend 12 inches beyond the farthest Company meter set equipment.

 ©2013 Pacific Gas & Electric Company. All Rights Reserved.

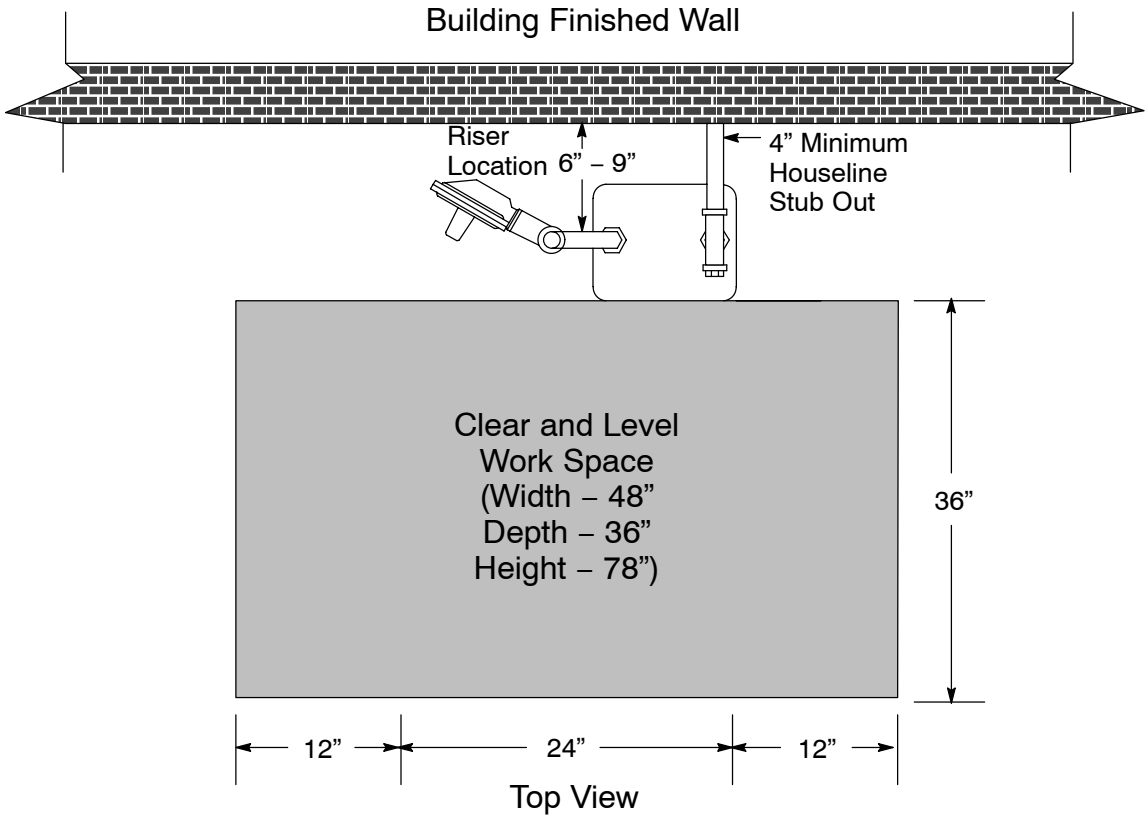

Figure 1
Typical Residential Gas Meter Connection

 ©2013 Pacific Gas & Electric Company. All Rights Reserved.

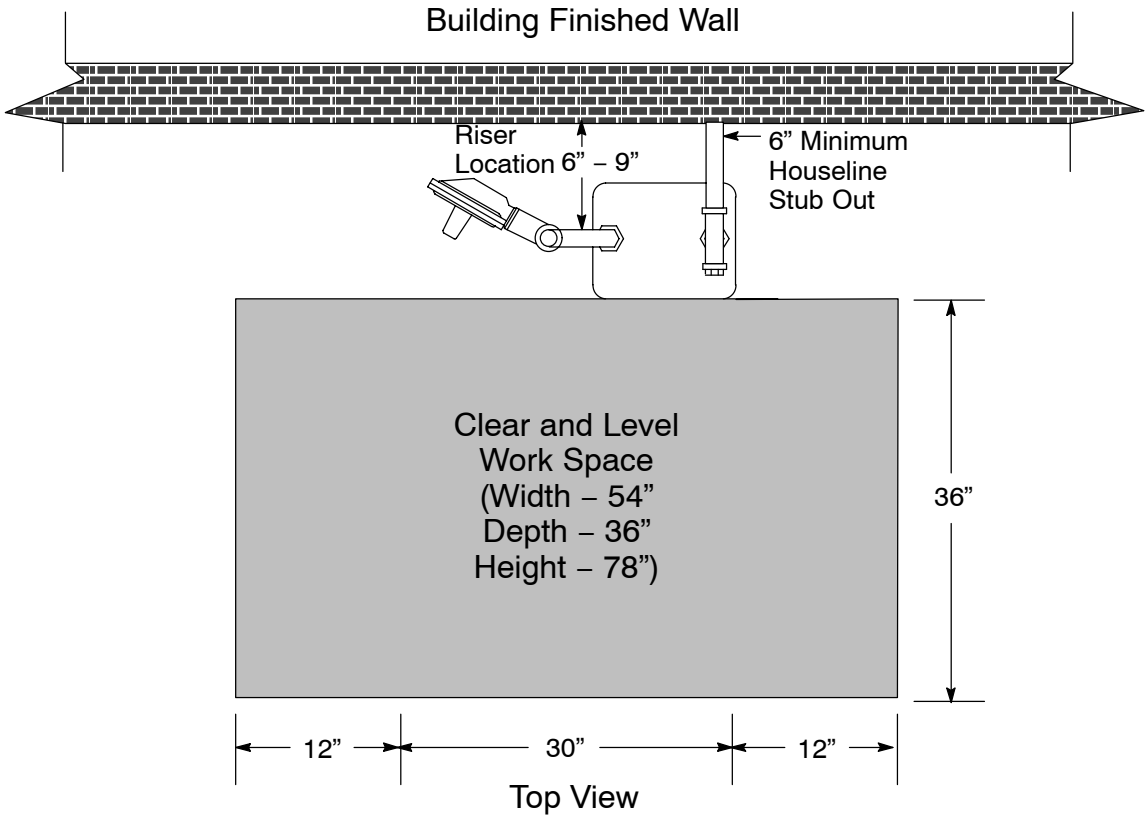

Figure 2
Typical Gas Meter Connection for 400 to 1000 Class Meter

 ©2013 Pacific Gas & Electric Company. All Rights Reserved.

(5) Meter Set Location Relative to Service Line

The meter set is typically located so that the service line is the minimum possible length, measured in a straight line perpendicular to the main. The Company may consider an alternate route if it results in significantly lower construction costs or facilitates construction.

(6) Meter and Regulator Accessibility

Each meter set must be in a “readily accessible location” for reading, maintenance, and replacement. Large meter sets or multi-meter manifolds will require adequate space for installation and maintenance and require drive-up access for the Company’s service trucks.

(7) Service Shut-Off Valve Locations

(a) Each service line must have a shut-off valve in a “readily accessible location” when:

- services or risers are newly installed, relocated, or completely replaced; or,
- work is performed under the Meter Protection Program.

(b) The location for the service shut-off valve is above ground on an outside riser in a “readily accessible location”.

Service risers must not be installed inside buildings or meter rooms, except where special circumstances prevent outside installation as determined by the Company in accordance with Gas Design Standard J-16. If the riser is located inside a building or an outside riser valve is not readily accessible, then a curb valve must be installed in a location that is readily accessible.

(8) Meter Set Separated From Service Shut-Off Valve

If the meter set (or meter and regulator assembly) is located remotely from the service shut-off valve, then install an additional service shut-off valve at the meter set when performing new installations, replacing the meter, or altering or replacing the service. The additional valve will facilitate maintenance and operation procedures.

(9) Meter Set Clearance Requirements

The meter set and service regulator vents must terminate in a safe outside location that complies with the following criteria:

(a) The regulator vent must not terminate near any sources of ignition or openings into the building. The riser must be a minimum distance of 36 inches from sources of ignition and openings into the building, and this clearance area will extend 10 feet above and 36 inches below the regulator vent termination. (Figure 3) For a large meter set or multi-meter manifold this clearance requirement will extend 12 inches beyond the farthest Company meter set equipment, 10 feet above the highest regulator vent, and 36 inches below the lowest regulator vent.

(b) The regulator vent will not be within any location under building overhangs, where the overhang is likely to direct gas into a building opening.

(c) The riser must be a minimum lateral distance of 8 feet from a forced air intake. (Figure 4) For a large meter set or multi-meter manifold this clearance requirement will extend 8 feet beyond the farthest Company meter set equipment.

(d) The meter set will not be within any location that is under display platforms or show windows in non-residential buildings, including any permanent, elevated, display floors or platforms associated with the window.

 PG&E Internal Information, SL2 ©2013 Pacific Gas & Electric Company. All Rights Reserved.

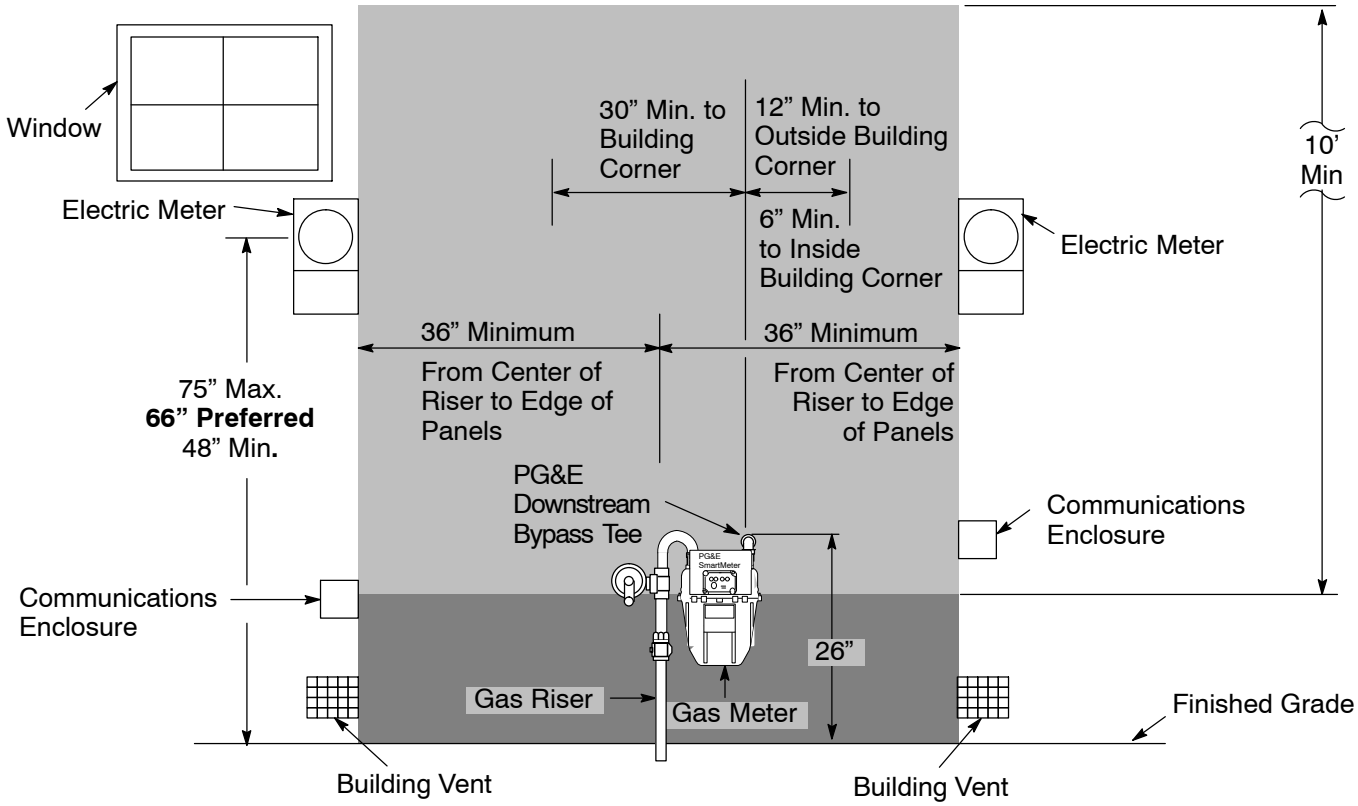

Figure 3
Gas Meter Set Separations

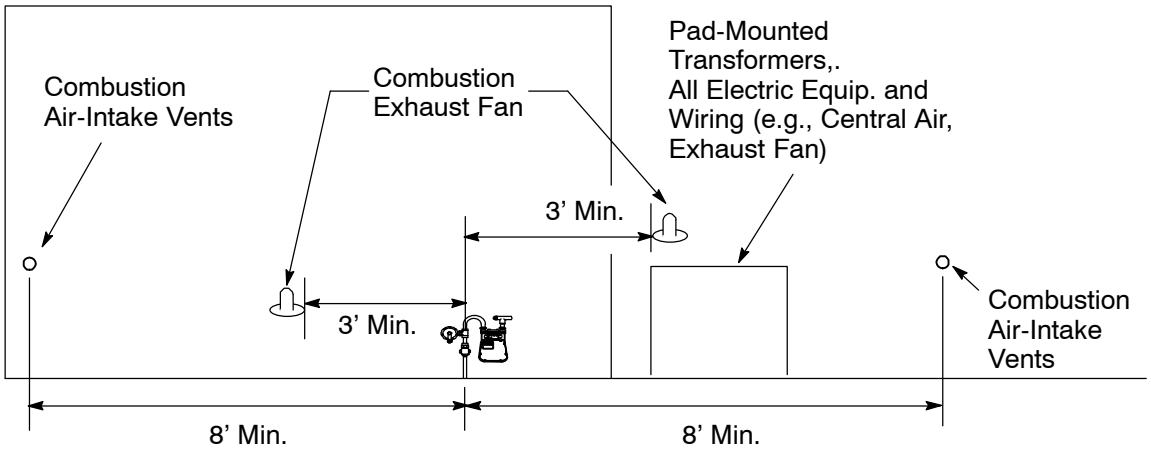

Figure 4
Gas Regulator Set Clearance Requirement from Sources of Ignition

 ©2013 Pacific Gas & Electric Company. All Rights Reserved.

(10) Corrosion Protection

Each meter set and service line must be installed and maintained in a manner to provide protection from corrosion.

(11) Meter Sets in Contact with Soil

Meter sets must not be installed in contact with the soil, in a depression below general ground level (curb meters are an exception), or where potentially corrosive materials are likely to contact the meter set. The potential for accidental electrical shunting of the insulating fitting must be minimized.

(12) Buried Service Lines Downstream of the Shut-Off Valve

On an exception basis, as approved by the Company, if it is necessary to bury any segment of the service line downstream of the service shut-off valve, see Gas Design Standard O-16, "Corrosion Control of Gas Facilities" for specific corrosion control requirements. Any metallic, Company-owned service line in such locations must have adequate corrosion protection.

(13) Service Risers

Company approved prefabricated, non-corrodible risers must be used and must be installed with the appropriate protective sleeve or "sunshield." A minimum 3 inch casing will be required for the placement of the gas riser in areas that will be paved with concrete or asphalt. Gas service risers will not be directly embedded in concrete or asphalt pavements.

If it is necessary to pave (concrete or asphalt) before installing the gas service, refer to Gas Design Standard A-75, "Gas Service and Mains in Plastic Casing."

(14) Overpressure Protection

When any overpressure protection devices are required in addition to the final service regulator, refer to Gas Design Standard H-15, "Design Requirements for Company-Owned Gas Regulating Systems Serving Customers."

(15) Potential for Damage from Vehicles

Meter sets should be installed in locations where they are not exposed to damage from vehicular traffic. If there is a potential for damage to the meter set from vehicular traffic, refer to Gas Design Standard J-95, "Meter Guard Design and Installation Arrangement."

(16) Working Space around Electric Meter Sets

To provide required working space around an electric meter, the gas service riser may not be located less than 36 inches laterally from the closest edge of the electric meter panel, extending from a point 9 inches above the center of the electric meter to the finish grade. (Figure 3) For a large gas meter set or multi-meter manifold this clearance requirement will extend 12 inches laterally beyond the farthest Company gas meter set equipment.

(17) Other Hazards

When selecting the meter set location, it is necessary to be alert to any potential hazards not specifically indicated in this document, including potential risk to others caused by the meter set, and exercise reasonable care to avoid any hazards. Electric grounding or bonding wires must not be attached to any part of the gas meter set.

(18) Service Delivery Point

All customer-installed equipment must be installed downstream of the Company point of connection as shown in Figure 5. Customer-installed equipment may include: earthquake valves, seismic shutoffs, remote monitoring equipment, or flex hoses. Any customer-installed equipment on Company facilities will be removed at the customer's expense.

 PG&E Internal Information, SL2 ©2013 Pacific Gas & Electric Company. All Rights Reserved.

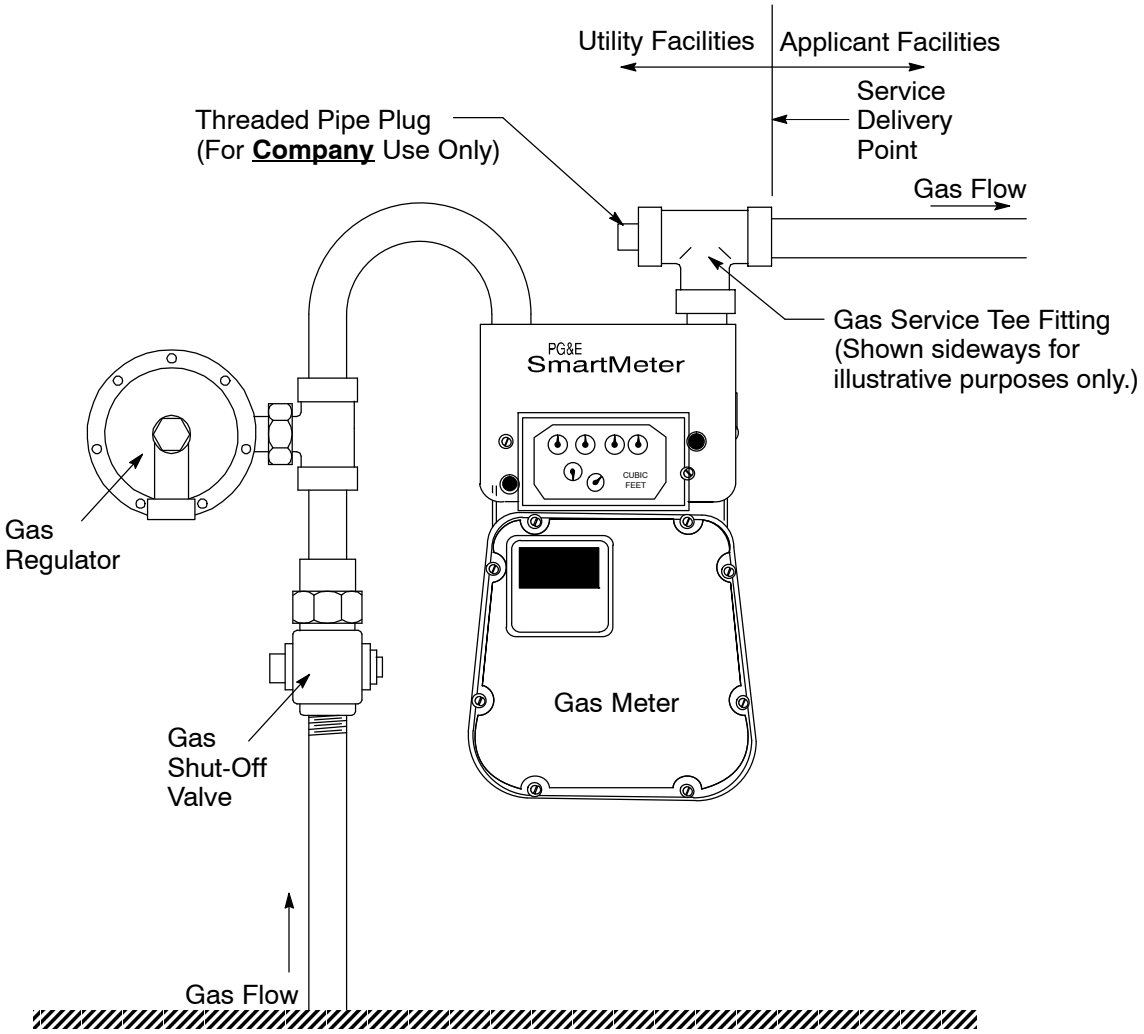

Figure 5
Typical Residential/Small Commercial Meter

B. Specific Requirements for Outside, Aboveground Meter Sets

(1) Location

Meter sets should be located at the building and as near as practical to the point where the gas service pipe enters the property. The meter set location typically should be near the side of the building from which the customer will be served. The order of preference for locating the outside, aboveground meter set is:

(a) In a protected location adjacent to the building served (Figure 6). An exception to this requirement is for schools, where it is required to protect the meter set from vandalism by installing it in a location that is separated from buildings and playground areas. It will be necessary to install a wire cage or other suitable protective enclosure, with a cover, around the meter set in these cases. (Figure 8)

(b) At the customer's property line if a location exists where the meter set can be properly protected from vandalism and/or damage by vehicles. (Figure 9)

(2) Meter Set Accessibility

For ease of access, avoid locations behind fences or other barriers that may be kept locked by the customer.

 ©2013 Pacific Gas & Electric Company. All Rights Reserved.

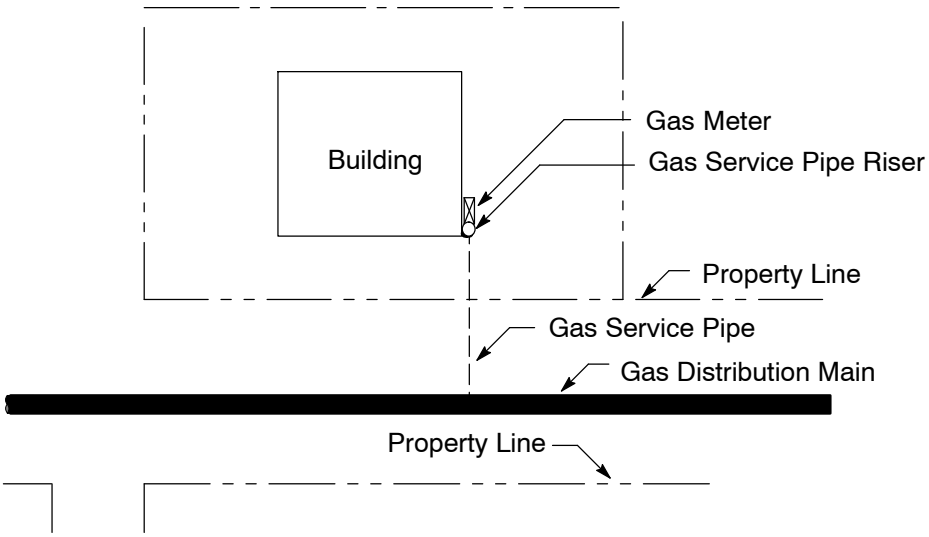

Figure 6
Gas Service

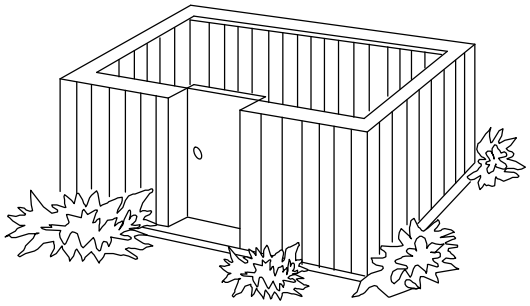

Figure 7
Typical Detached Enclosure

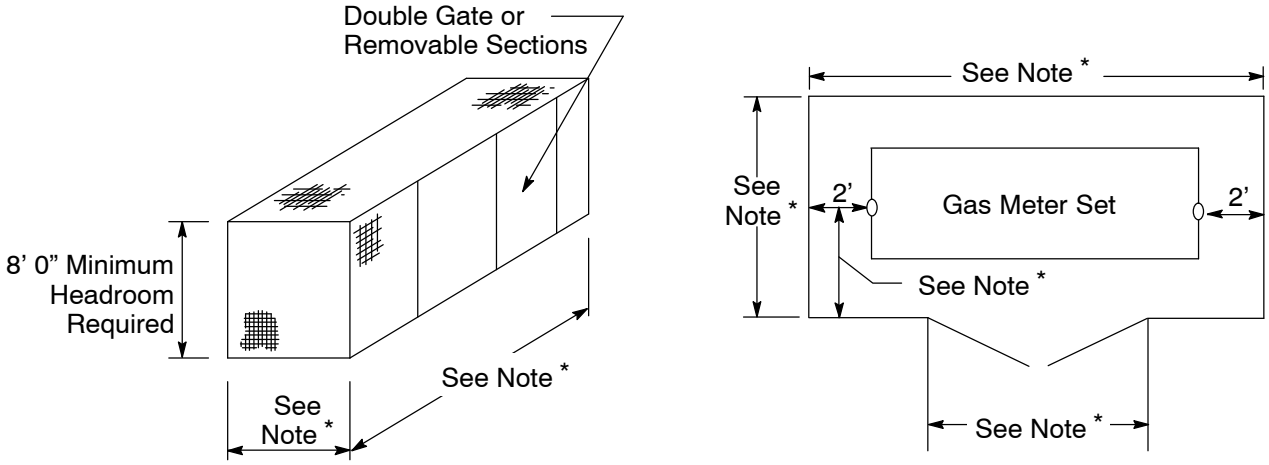

* – The enclosure's width and length will vary depending on the meter set. Contact your local PG&E project coordinators (formerly service planners) for more information.

Figure 8
Typical Enclosure Dimensions

 ©2013 Pacific Gas & Electric Company. All Rights Reserved.

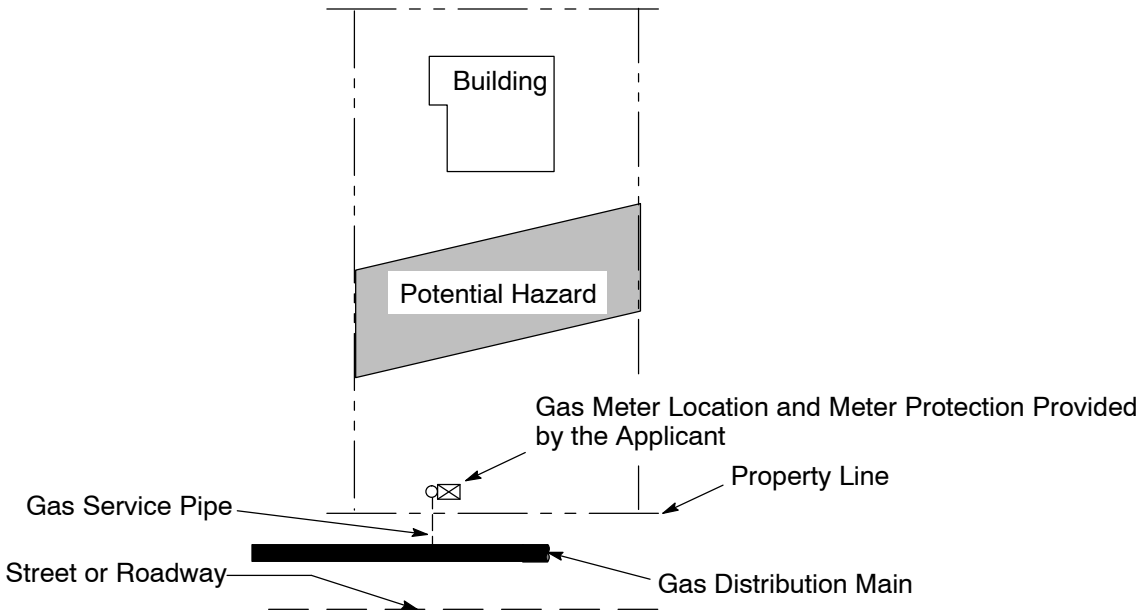

Figure 9
Property Line Installation

C. Specific Requirements for Meter Sets Located in Breezeways

(1) Isolation from Living Spaces

Meter sets installed in breezeways must be located so that gas cannot migrate into building openings.

(2) Ventilation

Meter sets may be installed in breezeways that are adequately ventilated to the outside atmosphere. At least one end of the breezeway is to be open and the other end should have at least two vents, one located at the top and the other at the bottom. Vents must be fixed, and be a minimum of 12 inches by 12 inches or equivalent.

(3) Separation from Sources of Ignition

No sources of ignition will be allowed in the breezeway. Any electric wiring, switches, light fixtures, and circuit breakers must meet the requirements of the National Electric Code for installation in Class 1, Division 2 areas.

D. Specific Requirements for Meter Sets Located in Cabinets

(1) Meter cabinets are not a preferred method of installation. Meter cabinet installations require prior approval from the local Field Services Manager. When approved they must comply with the requirements in this section.

(2) It is preferred to have regulators installed on the outside of the cabinet. Additional space will be required for larger regulators and dual-head regulators. The local Field Services Manager may approve to install the regulators in a cabinet. Regulators in a cabinet require the vents to be piped out of the cabinet per Gas Design Standard H-93, "Regulator Vent Lines - Above Ground."

(3) Meter sets and meter set components located in a cabinet must have adequate working space, no source of ignition and be properly ventilated. See Gas Design Standard K-51, "Single Meter Enclosure for Domestic Gas Meters" for single meter cabinet requirements and details. Final dimensions must be approved by Company prior to construction.

(4) Cabinets must be designed to be vapor proof and prevent migration of gas into the interior of a building or other location where gas may create a hazard. The cabinet must be constructed of non-metallic and non-combustible material with non-metallic doors.

(5) Meter cabinets that have been constructed prior to acceptance by Company may not be approved. Customers should submit these requests with the application early in the planning stage to avoid delays.

(6) Modifications to meter sets in cabinets will require compliance with current codes and standards.

(7) Cabinets are limited to a minimum depth of 18 inches and a maximum depth of 36 inches. A cabinet deeper than 36 inches will require conforming to the requirements of Gas Design Standard J-16.

 ©2013 Pacific Gas & Electric Company. All Rights Reserved.

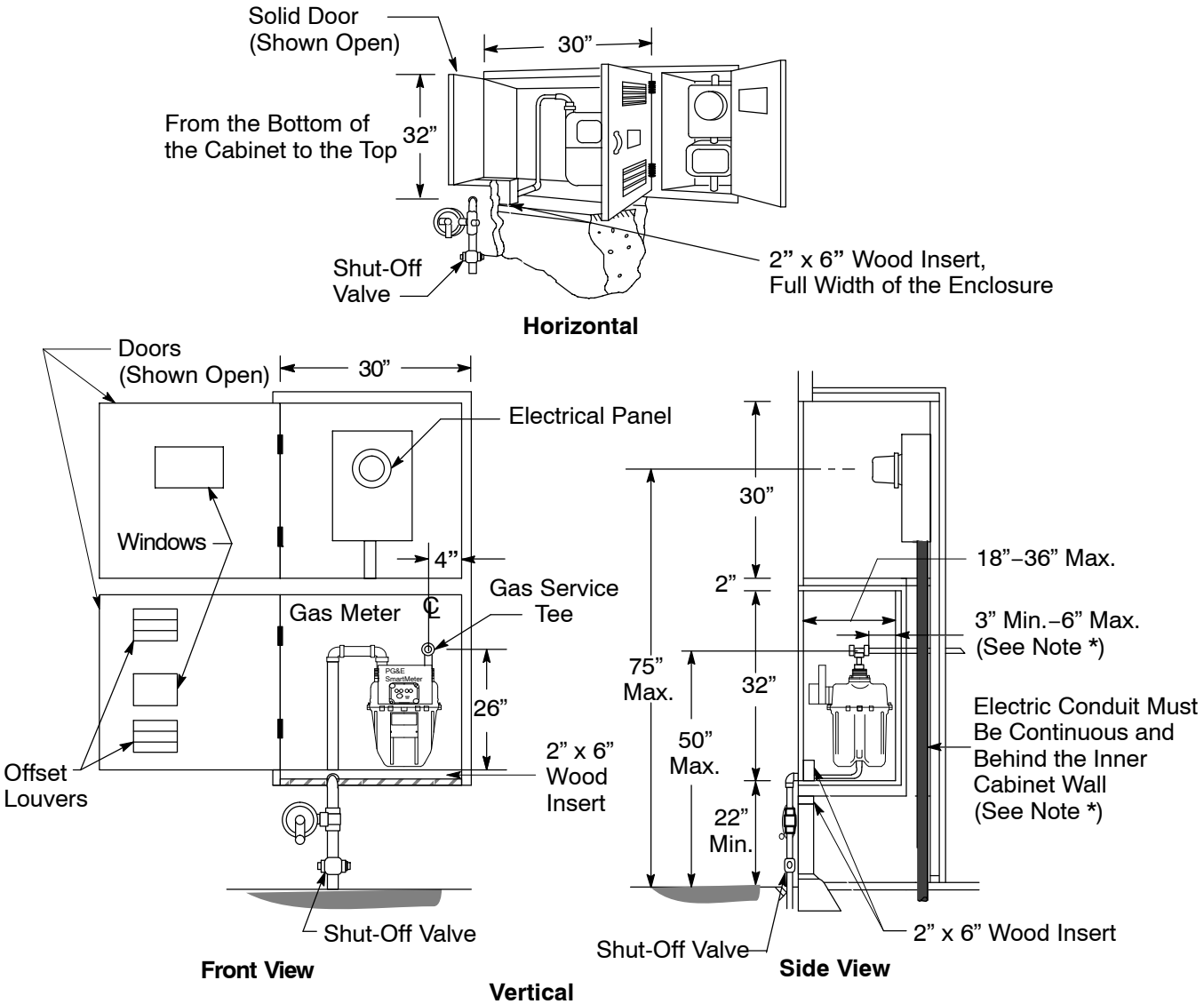

* – The gas meter cabinet may be enlarged and the electric conduit may pass between the inner cabinet wall and the interior back of the gas meter section either if the conduit is continuous (i.e., without joints or fittings), or if the wiring meets the requirements of the *National Electric Code* for Class I, Division 1 areas. A gas-tight seal also must be provided where the conduit passes through the enclosure partition. When the electrical conduit passes through the gas section, the houseline must extend a minimum of 4 inches and a maximum of 6 inches past the electrical conduit toward the cabinet door. Applicants must ensure that when installing the service disconnect and distribution section in the cabinet, the installation complies with the requirements of the inspection authority having jurisdiction.

Figure 10
Recessed Individual Meter Cabinet, Horizontal or Vertical

 ©2013 Pacific Gas & Electric Company. All Rights Reserved.

E. Specific Limitations for Curb Meter Sets

(1) The Company considers curb meter installations undesirable because they are costly and difficult to maintain. See Gas Design Standard J-14.1, “Curb Meter Installations” for a description of the policy and design considerations for curb meter installations.

(2) Large Meter Installations for Commercial or Industrial Loads

(a) On an exception basis a vault or meter box may be located on the customer’s property, either adjacent to the building served or near the property line.

F. Specific Requirements for Meter Sets Located Inside Buildings

(1) Meter sets and all meter set components located inside buildings must be contained within a dedicated gas meter room as specified in Gas Design Standard J-16.

G. Multi-Meter Manifolds

Multiple meters will be at one approved location for each property or location. Number of meters, tiers and size of piping will be designed by Company. (see Gas Design Standard J-52.1, “Gas Meter Manifolds (1-1/4” and 2” Sizes),” Gas Design Standard J-52.2, “Brackets for Gas Meter Manifolds,” Gas Design Standard J-52.3, “Gas Meter Manifolding”). Company limits gas meter manifold configurations to one-tier or two-tier meter manifolds not exceeding 60 inches high. These manifolds are measured from the final, level, standing surface to the top of the manifold.

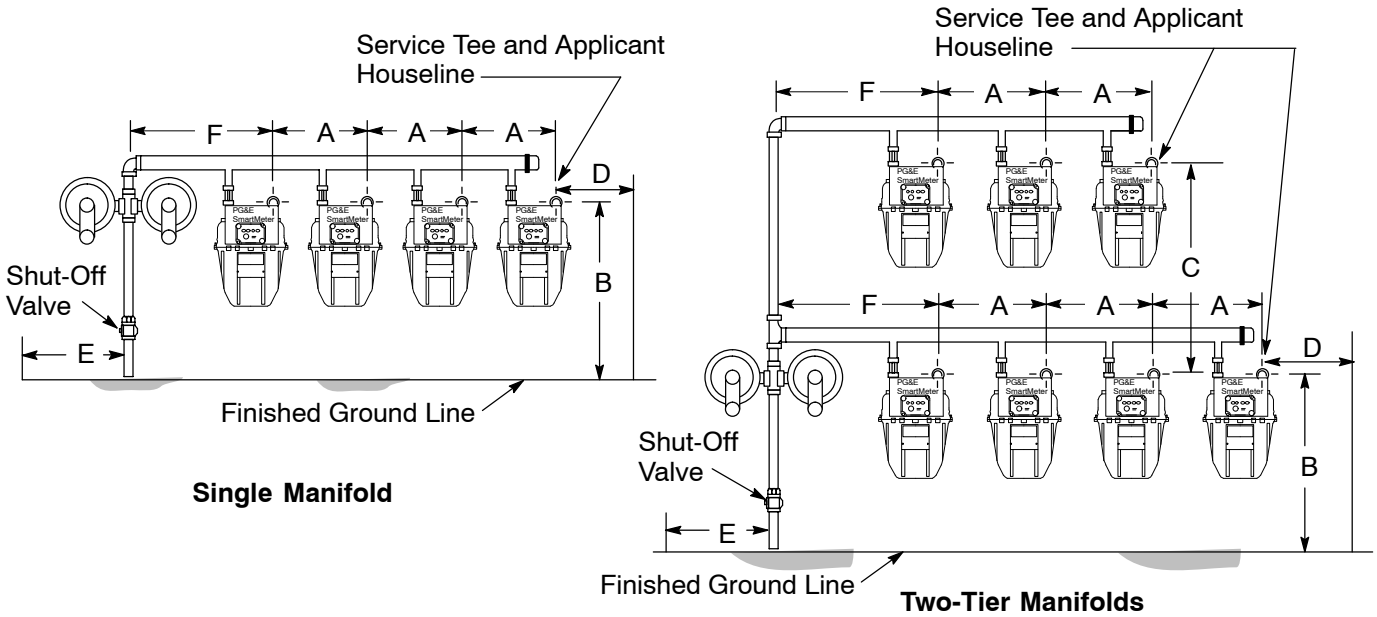

Figure 11
Dimensions for Typical Multimeter Installations

 ©2013 Pacific Gas & Electric Company. All Rights Reserved.

Table 1 Dimensions to Figure 11

Dimension	Installation	Comments
A	12” for residential 15” for cabinet installations 20” for all commercial up to 1000 class meters	Custom design dimensions will be provided by the Company for mixed meter sizes and larger than 1000 class meters.
B	26” (typ.) for unenclosed 32” (typ.) for cabinet installations	–
C	24” (ALL)	–
D	6” min. to inside building corner, 12” min. to outside building corner	–
E	30” minimum to inside or outside corner of building	–
F	24” (typ.) for residential 36” (typ.) for 400 to 1,000 class meter commercial	Custom design dimensions will be provided by the Company for mixed meter sizes and larger than 1000 class meters.

Notes in reference to Figure 11

1. The applicant’s houselines must be stubbed out 4 inches to 6 inches from the finished wall at the locations shown.
2. Clearly mark each houseline and meter position when they are hooked into multimeter installations per Item H.

H. Marking Houselines

The Company requires that buildings, dwellings, occupancies, or other facilities or locations be marked to identify gas lines that are serving locations or supplying equipment. Applicants must ensure that the following rules for marking houselines are enforced.

(1) The Company requires that lines are marked by attaching an embossed, durable, metal or plastic tag to each houseline. The Company must approve of the tag.

(2) Markings must be legible and specific.

(3) Marking information must include an authorized apartment or street number and a use or location designation.

(4) The houseline must be permanently, clearly, and prominently marked at the point of the service connection (i.e., service delivery point).

NOTE: The Company will not install meters unless the permanent address, the location, or the area being served (if applicable) is marked at each meter location.

I. Protecting Meter Sets From Vehicular Damage

(1) Meter Sets in Traveled Areas

If any portion of a gas meter set must be located in or adjacent to traveled areas where there is the probability of vehicular damage, physical protection acceptable to the Company must be provided by the customer. The Company must determine when such protection is required. If the meter set is being relocated at Company convenience and the only practical new location requires physical protection, then the Company must install protection. Physical protection must be provided for any gas meter per Gas Design Standard J-95, “Meter Guard Design and Installation Arrangement.”

(2) Returning Damaged Meter Sets to Service

If a meter set is damaged by a vehicle or other equipment and there is a potential for a recurrence, temporary barricading must be installed before service is restored, and until permanent protection is installed per Gas Design Standard J-95 or the meter is relocated.

 ©2013 Pacific Gas & Electric Company. All Rights Reserved.

Target Audience

Design, engineering, estimating, field services, M&C crews, gas T&R, general construction

Definitions

NA

Acronyms and Abbreviations

AMR: automatic meter reading
CFR: *Code of Federal Regulations*
CPUC: California Public Utilities Commission

Compliance Requirement/ Regulatory Commitment

Customer Meters and Regulators: Location . . . . . 49 CFR 192.353
Customer Meters and Regulators: Protection From Damage . . . . . 49 CFR 192.355
Customer Meters and Regulators: Installation . . . . . 49 CFR 192.357
Service Lines: Valve Requirements . . . . . 49 CFR 192.363
Service Lines: Location of Valves . . . . . 49 CFR 192.365

References

Gas Service and Mains in Plastic Casing A-75
Plastic Main and Service Installation A-90
Design Requirements For Company Owned Gas Regulating Systems Serving Customers . . . H-15
Vent Cover for Regulator on Curb Meter Sets H-91
Plastic Vent Caps H-92
Regulator Vent Lines - Above Ground H-93
Curb Meter Installations J-14.1
Gas Meter Room J-16
Gas Meter Manifolds (1-1/4" and 2" Sizes) J-52.1
Brackets for Gas Meter Manifolds J-52.2
Gas Meter Manifolding J-52.3
Meter Guard Design and Installation Arrangement J-95
Precast Concrete Pit K-10
Precast Concrete Vaults & Pits K-10.1
Plastic Valve Box for 3/4" - 4" Valves K-40
Method of Installing Concrete Curb Boxes in Concrete Sidewalk K-40.1
Precast Boxes 24" x 36", 30" x 48", and 30" x 60" K-42
Precast Boxes 13" x 24" and 17" x 30" K-42.1
Single Meter Enclosure for Domestic Gas Meters K-51
Corrosion Control of Gas Facilities O-16
Vault Inspection Procedure S4446
Gas Service Extensions . . . . . Gas Rule 16
CPUC General Order 112-E
Electric and Gas Service Requirements (Greenbook), Section 2, "Gas Service."
National Electric Code

Appendices

NA

Attachments

NA

 ©2013 Pacific Gas & Electric Company. All Rights Reserved.

Revision Notes

Revision 08 has the following changes:

1. Updated Purpose and Scope.
2. Updated Applicability.
3. Added figures from Electric and Gas Service Requirements (Greenbook).
4. Added language requiring meter sets in cabinets to be approved by Field Services Manager.
5. This document is part of Change 66.

Asset Type: Gas Metering
Function: Design and Construction
Document Contact: Gas Design Standard Responsibility List

 PG&E Internal Information, SL2 ©2013 Pacific Gas & Electric Company. All Rights Reserved.

Purpose and Scope

This gas design standard describes the requirements for any gas meter room inside any building. Local jurisdictions may have adopted codes or ordinances relating to customer-owned and maintained facilities that could require consideration when designing a gas meter room. Compliance with California Public Utilities Commission (CPUC) requirements is mandatory. For PG&E gas meter locations, the applicable codes and regulations are described in Gas Design Standard J-15, "Gas Meter Locations."

General Information

1. A gas meter room is a space within a building that is solely used to house natural gas metering equipment.
2. **The preferred gas riser, meter and regulator location is outside and adjacent to the building being served.** On an exception basis, gas meters and regulators may be installed in a specially designed gas meter room. However, PG&E will not install a gas meter in a gas meter room unless all of the following conditions have been met:
   A. The applicant has specifically applied to install the gas meter in a specially designed room.
   B. The applicant's request is accompanied by an explanation detailing the reasons why the presence of some condition associated with the property itself makes it impossible to locate the gas riser, regulator and meter outside the building OR that such location would deny the applicant a substantial benefit of property ownership enjoyed by other similarly-situated properties and that the approval of this exception would not constitute a special privilege to this applicant which has been denied to similar applicants in other locations.
   C. PG&E must concur that the unique attributes of this property render it impossible to locate the riser, regulator and meter outside the building and that approval of the proposed meter room is reasonable and safe and does not constitute a grant of a special privilege or advantage.
   D. PG&E and the applicable planning/building department must approve the design in advance of any construction.
   E. The applicant has recorded a covenant substantially in the Covenant Agreement which provides that the applicant or its successors in interest will maintain the meter room as approved by PG&E in good and serviceable condition, will provide access to PG&E or its agents at all times, and will not use the meter room for any other purpose (e.g. storage).
3. A meter room may not be used as a storage area.
4. It is the responsibility of the applicant to design, construct, and furnish the gas meter room and related materials to meet the gas meter room requirements that are described in this document, and in accordance with the California Building Code, including means of egress and those provisions to safeguard the health and safety of all personnel. The minimum room dimensions will be unique for each project based on the meter, regulator, and manifold requirements necessary to serve each load. Applicant gas service and meter installation arrangements are subject to PG&E's review and approval.
5. A covenant must be placed on the deed of property ensuring that successive property owners will adhere to the requirements in this standard. The covenant will be prepared by the PG&E land department and recorded on the deed of property prior to the installation of the gas meters. The covenant will state that PG&E has the right to suspend or terminate gas service if the conditions of this standard are not upheld. In addition, the covenant will state the owner is responsible for complying with gas tariffs. Any deviation in the form of the Covenant Agreement must be approved by the PG&E land department prior to installing of the gas meters.
6. The covenant confirms the applicant's financial responsibility when a relocation of PG&E facilities is required; e.g. relocating a meter set from a basement under the city sidewalk.

 ©2013 Pacific Gas & Electric Company. All Rights Reserved.

7. The covenant will provide that PG&E has the right to terminate service if ever PG&E determines, through regular inspection, information or otherwise that the terms of this standard have not been upheld. The following list describes examples of some but not all situations that violate the terms of this standard:
   A. The fan is not in constant operation or does not turn on with the lights.
   B. The lights are not operational.
   C. The combustible gas indicator (CGI) is not signed-off or up-to-date.
   D. The room is not vapor-tight.
   E. The room is not clear of storage.
8. Gas meter room location and piping must conform to all current federal, state, and local codes including Code of Federal Regulations 49 (CFR. Part 192), "Transportation of Natural and Other Gas by Pipeline: Minimum Federal Safety Standards," and the National Fuel Gas Code (NFPA 54).
9. PG&E requires all applicant installed electrical equipment in the room be classified as Class I, Division 1, Group D pursuant to NFPA-70, National Electric Code.
10. Do not locate or place any electric devices or electrical connections for services such as cable television or telecommunications within the gas meter room. Under no circumstances will this requirement be waved.
11. All electrical wiring and conduit that pass through a gas meter room must conform to the National Electric Code Article 501.
12. The customer must provide lighting for the gas meter room, with a minimum 30 foot-candle illumination.
13. No foreign pipe (i.e., drain lines, domestic water, etc.) or ducts are permitted to be located in or routed through the gas meter room.
14. Gas meter room(s) must be designed to prevent entrapment of gas. Mechanical ventilation to the outside atmosphere is required.
15. The requirements of this standard must be met when a customer houseline is added to an existing gas meter room or gas meter set within a building.

General Service Requirements

1. Service shut-off valves must be installed and comply with the following:
   A. Each new service or replacement service must have a readily accessible shut-off valve that is preferably located outside, above ground on the gas service riser.
   B. If it is necessary to locate the riser inside a building, or an existing riser valve is otherwise inaccessible, then a curb shut-off valve must be installed at the customer's expense in a readily accessible location in accordance with Gas Design Standard A-43.2, "Curb Valve Installations, Distribution Systems."
2. Service Riser Locations
   A. Service risers must not be installed inside buildings or meter rooms, except where special circumstances prevent outside installation. The installation of an inside riser may be justified at the discretion of the local PG&E senior gas engineer. PG&E must grant prior approval for any gas meter design/location where settlement or subsidence issues have been identified in any geotechnical report.
   B. Examples of situations where inside risers are considered:
      (1) A location with insufficient clearance between the building and the property line to safely locate the riser outside of the building.
      (2) A building with the meter room located inside of a basement or half basement, where an outside riser at ground level would enter the room at an excessive height.
      (3) An inner city urban redevelopment building with inadequate space for an outside riser.
      (4) A designated historical building where modifications needed to locate the riser outside are not permitted.
      (5) Sidewalk Basements - when the service passes through a sidewalk basement to the meter location on private property. Sidewalk basements are basement spaces built underneath a city sidewalk, in front of the foundation wall of a building. The PG&E land department must review and verify the applicant has sufficient rights for PG&E equipment to be in a sidewalk basement prior to the installation of the gas meters.
   C. Existing service risers inside of buildings or meter rooms may be repaired with a plastic insert in accordance with Gas Design Standard A-90, "Plastic Main and Service Installation."

 ©2013 Pacific Gas & Electric Company. All Rights Reserved.

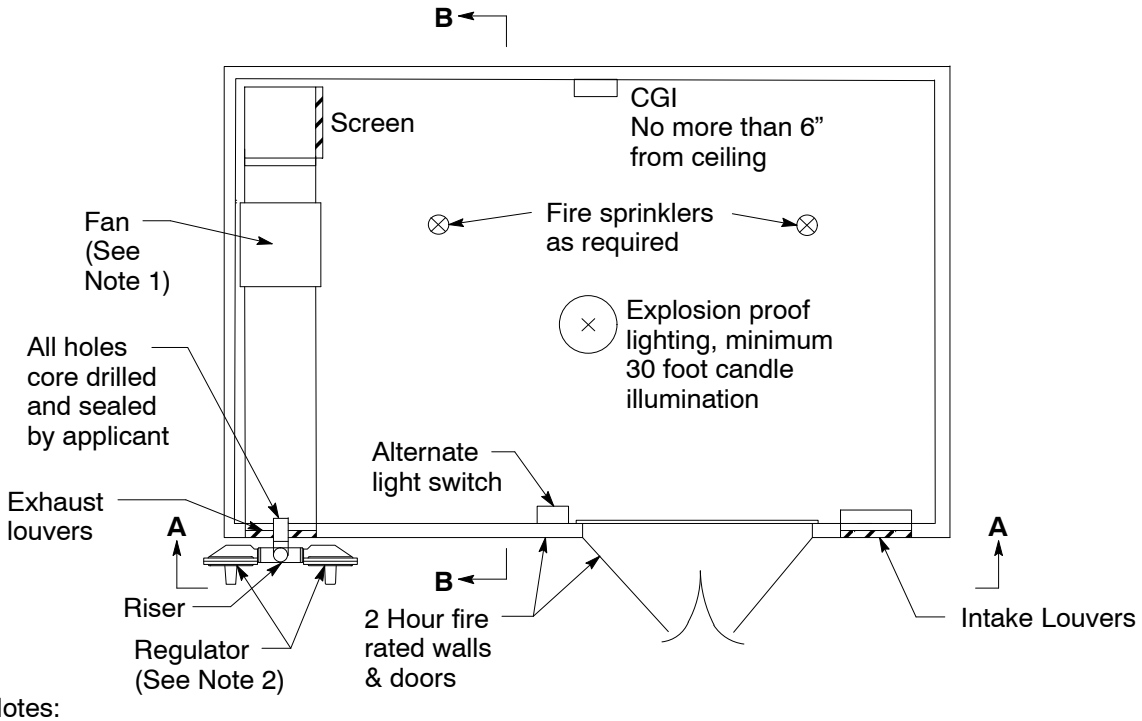

Notes:
1. Fan can be mounted anywhere in the exhaust duct.
2. Regulator vents to be piped outside when regulators are approved to be installed inside room.

Figure 1
Plan View

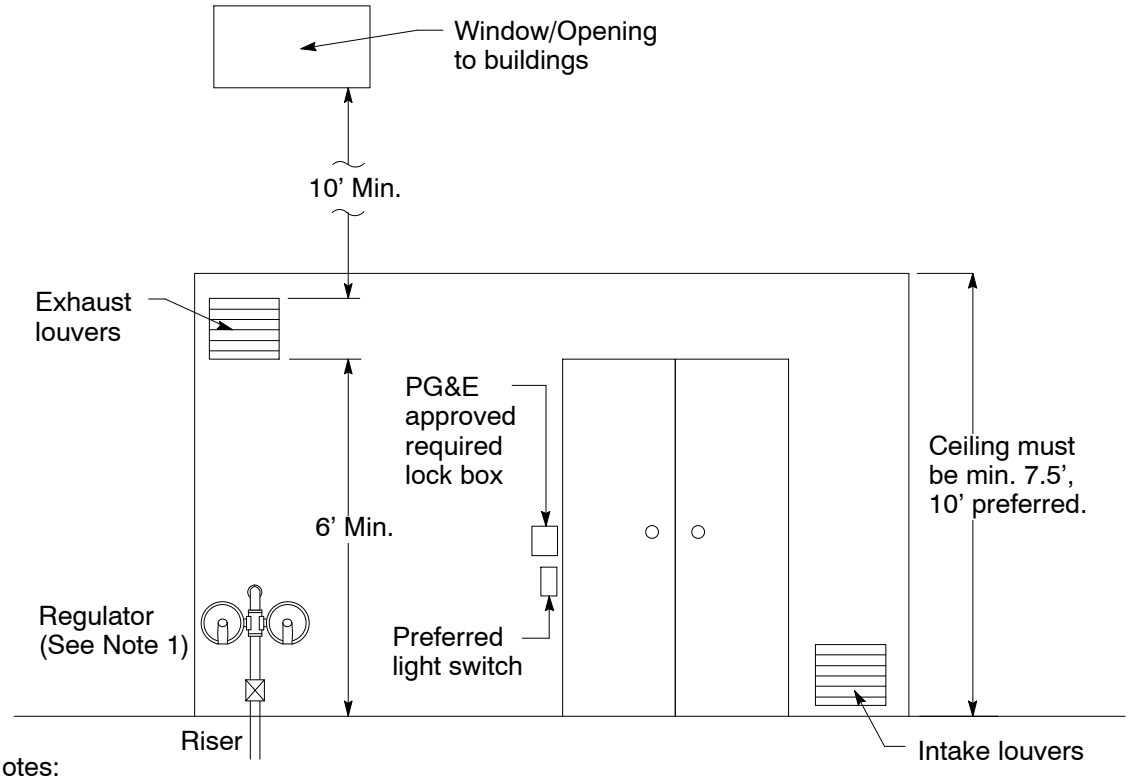

Notes:
1. See Natural Gas Regulator Requirements 3.A.(1), Page 6.

Figure 2
Front Outside Elevation – A

 ©2013 Pacific Gas & Electric Company. All Rights Reserved.

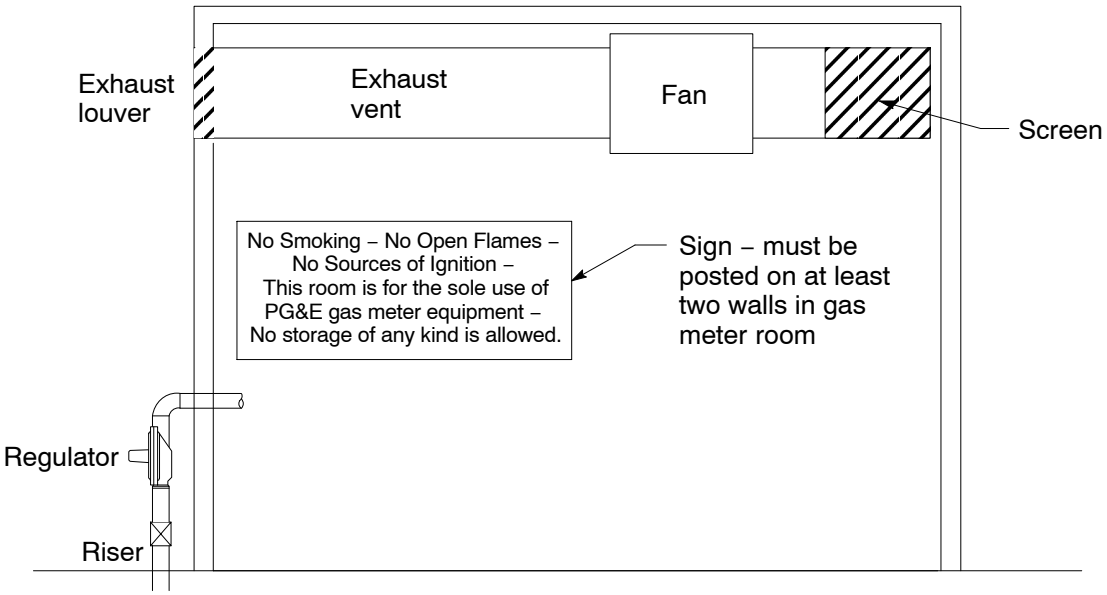

Figure 3
Cross Section – B

Meter Room Location Requirements

The following is a list of gas meter room locations that will be approved by PG&E for situations where the customer's building occupies all of the property that is owned by the customer (i.e., zero lot line) and the construction of an alcove is not possible. Option 1 is preferred and successive options will only be considered when the previous options are not possible:

1. A meter room that is accessible from a public right-of-way at all times. The gas meter room is located at an above grade location designed and constructed with walls, ceiling, and floor that are vapor-tight to prevent the migration of gas to the building's interior. The gas meter room has doors that open to the outside of the building.
2. A gas meter room that is located adjacent to an outside building wall inside the customer's building and constructed with walls, ceiling, and floor that are vapor-tight to prevent the migration of gas to the building's interior. This gas meter room is also located at grade level with a door that opens to the inside of the building. These doors shall be vapor-tight to prevent the migration of gas to the building's interior.
3. A customer's building's basement meter room that is adjacent to an outside wall and constructed with walls, ceiling, and floor that are vapor-tight to prevent the migration of gas to the building's interior.
4. A sidewalk basement meter room is not acceptable without a written approval from the municipality and PG&E.

Natural Gas Meter Room Design Requirements

1. Fire rated walls must have a minimum 2-hour fire rating, or as specified in the California Building Code for Group H, Division 1 occupancies.
2. All entry and exit doors must be rated commensurate with the rating of the wall. Doors that open to the inside of the building must be vapor-tight to prevent the migration of gas to the building's interior.
3. The applicant/customer must consult with local PG&E service planning personnel to obtain the required gas meter room dimensions. Door dimensions and access must be approved by PG&E on a case-by-case basis.
4. No floor drains are permitted within a natural gas meter room.
5. If the applicant/customer's building is equipped with a fire sprinkler system pursuant to NFPA-13 standard for the installation of sprinkler system, the applicant/customer must also install fire sprinklers inside of the gas meter room.
6. Only explosion-proof lighting fixtures are to be installed in a gas meter room and these must meet the requirements of the NFPA-70: National Electric Code for Class I, Division 1, Group D locations.

 ©2013 Pacific Gas & Electric Company. All Rights Reserved.

7. It is preferred to mount the light switch outside the room next to the entry door. Explosion-proof light switches must be installed if such switches are to be located inside of the meter room. These switches must meet the requirements of the NFPA-70: National Electric Code for Class I, Division 1, Group D locations.
8. No electrical receptacles (i.e., outlets) are permitted within a gas meter room.
9. The applicant/customer must furnish ladders or platforms inside of the gas meter room as required for a tiered meter configuration.
10. The floor-to-ceiling height inside of the meter room must be a minimum of 7.5 feet. The preferred height is not more than 10 feet.
11. Doors into gas meter rooms must be provided with approved signs. The signs must state that the room contains flammable gas.
12. Signs must be posted on at least two walls within the room stating “No Smoking – No Open Flames – No Sources of Ignition - This room is for the sole use of PG&E gas meter equipment – No storage of any kind is allowed”.
13. A lock box, acceptable to PG&E, containing a door key to the gas meter room door must be installed by the applicant/customer and such lock boxes must be located near the gas meter room door.
14. The applicant/customer is responsible for core-drilling, sealing, waterproofing, and maintaining a vapor tight seal on any wall, ceiling, or floor where:
    A. Inlet natural gas piping enters the building and/or the gas meter room.
    B. Natural gas regulator relief vents exit the gas meter room and the applicant/customer’s building.
    C. Conduits containing wiring for the gas meter (and appurtenances) enter the gas meter room.

Gas Meter Room Ventilation Requirements

Applicant must submit the designs and calculations, stamped and signed by a licensed professional mechanical engineer, demonstrating that the ventilation for the gas meter room satisfies the following requirements:

1. Ventilation must be provided in accordance with the Mechanical Code and one of the following:
    A. Continuous ventilation introducing fresh air at six air exchanges per hour.

    OR

    B. A combustible gas detection system, interlocked with an automatic ventilation system that will provide fresh air at six air exchanges per hour upon activation of the detection system. The gas detectors must be set at 20% Lower Explosive Limit (LEL) (or 1.0% concentration of natural gas in air). The instructions for the combustible gas detection system are found below in Requirements for Customer-Owned Equipment, Item 5.

- The formula for the gas room air exchange calculation is:
  minimum fan air flow rate (cfm) = room volume (cf) x 6 air changes per hour / 60 minutes per hour
  (where cfm = cubic feet per minute, cf = cubic feet.)
  Pressure drop values (e.g. louver, screen and duct elements) must be included in the design and calculations.

2. To ensure complete air exchange the low-fresh air intake and the high-exhaust air duct must be at opposite corners within the room. Exterior louvers must be in a low-fresh air and high-exhaust air configuration as far apart as practical and ensure no recirculation. The bottom of the high-exhaust air louver will be over the travel way at least 6’ above the finish outside grade.
3. Mechanical fans and all other electric devices must be explosion proof and meet the requirements of the NFPA-70: National Electric Code for Class I, Division 1, Group D locations.
4. Mechanical fans and detection equipment must be continuously monitored in case of failure. Alarms for trouble and failure must be installed in accordance with NFPA-72, National Fire Alarm Code.

 ©2013 Pacific Gas & Electric Company. All Rights Reserved.

Natural Gas Regulator Requirements

1. Natural Gas Regulators

   Typically PG&E will install natural gas service regulators and overpressure protection devices outside of a meter room. Applicants/customers who want to install gas service regulators and overpressure protection devices inside of a meter room must provide PG&E with the written justification as part of the application. The preferred gas riser, meter and regulator location is outside and adjacent to the building being served. On an exception basis, gas meters and regulators may be installed in a specially designed gas meter room. PG&E must approve all gas meter and regulator installations and the gas meter room design in advance of any construction. If acceptable to PG&E, the following additional conditions apply:

   A. Each gas service regulator installed within a building must be located as near as practical to the point of the service line entrance into the meter room, and as specified by PG&E.

   B. PG&E will specify materials and designs for any overpressure protection devices needed, as outlined in Items 2 and 3 below.

2. Regulator Vent Lines

   A. Regulators and any additional overpressure protection equipment installed indoors must be vented to the outdoors. The customer is required to provide holes (penetrations) through walls or ceilings for these vents. In rare situations where the meter room location is not adjacent to an outside wall, the customer is required to install the vent piping from the meter room to the outside wall (PG&E will determine pipe size and location). PG&E will be responsible for connecting the vent piping to the regulator or overpressure protection device.

   B. PG&E will position gas regulators to minimize the length of the regulator vent lines and to ensure adequate venting capacity.

   C. PG&E will specify regulator vent lines, in accordance with Gas Design Standard H-93, “Regulator Vent Lines – Above Ground,” when required.

3. Regulator Vent Locations

   A. Service regulator vents must terminate in a safe outside location that complies with the following criteria:

      (1) The regulator vent must not terminate near any sources of ignition or openings into the building. The regulator vent must be 36 inches horizontally from sources of ignition and openings into the building, and this clearance area will extend 10 feet above and 36 inches below the regulator vent termination.

      (2) A minimum lateral distance of 8 feet from a forced air intake. This includes the intake vents for the gas meter room.

      (3) Within any location that is under display platforms or show windows in commercial buildings, including any permanent, elevated, display floors or platforms associated with the window.

      (4) Within any location that is under building overhangs, where the overhang is likely to direct venting gas into a building opening.

   B. Vents for all natural gas regulator and gas monitor diaphragm equipment must terminate above a reasonable flood level. Regulator vent extensions must be separate lines, terminated so they are protected from the rain and provided with screened fittings to prevent insects and other debris from entering the vent.

   C. Vent locations must have final approval by PG&E.

 PG&E Internal Information, SL2 ©2013 Pacific Gas & Electric Company. All Rights Reserved.

Requirements for PG&E-Owned Equipment

1. Natural Gas Metering

   Electrical grounding or bonding to PG&E's metering facility piping or equipment or to customer-owned house lines inside of the meter room is not permitted.

2. Land-Line Cable and Conduit

   Customers with an estimated average use of 10,000 therms per month or more are required to install, own, and maintain a nominal 1" diameter conduit and a telephone cable. PG&E's requirements for the conduit are described below.

   A. Applicant/customer must extend the conduit and telephone cable from the closest telephone service location (i.e., outdoor "general purpose" area) to a location specified by PG&E that will be at or near the gas metering facilities. The maximum allowable distance from the telephone service location to PG&E's gas meter is 50 feet.

   B. Conduit must terminate within 3 feet of the gas meter location.

   C. Applicant must install a conduit seal, inside the gas meter room, within 18 inches of the boundary where the conduit enters the gas meter room. There must be no conduit fitting between the boundary and the seal. PG&E will pour the conduit seal.

   D. Applicant/customer is responsible for all charges and costs associated with installing the telephone facilities necessary to provide telephone service for PG&E's gas metering facilities which are to be used for PG&E's purposes.

   E. PG&E is responsible for establishing telephone service and for the ongoing telephone service charges for gas metering purposes.

3. Additional Equipment Needed to Support Gas Meters

   Consideration must be given to the design requirements for:

   A. Volume pulse output connections.

   B. Electronic correctors.

   C. Power for gas meters. If AC power is required for PG&E equipment, the applicant must provide an outlet termination (with a lockable disconnect switch) located in the outdoor "general purpose" area, as noted in Item 2 above (also see Figure 4).

 ©2013 Pacific Gas & Electric Company. All Rights Reserved.

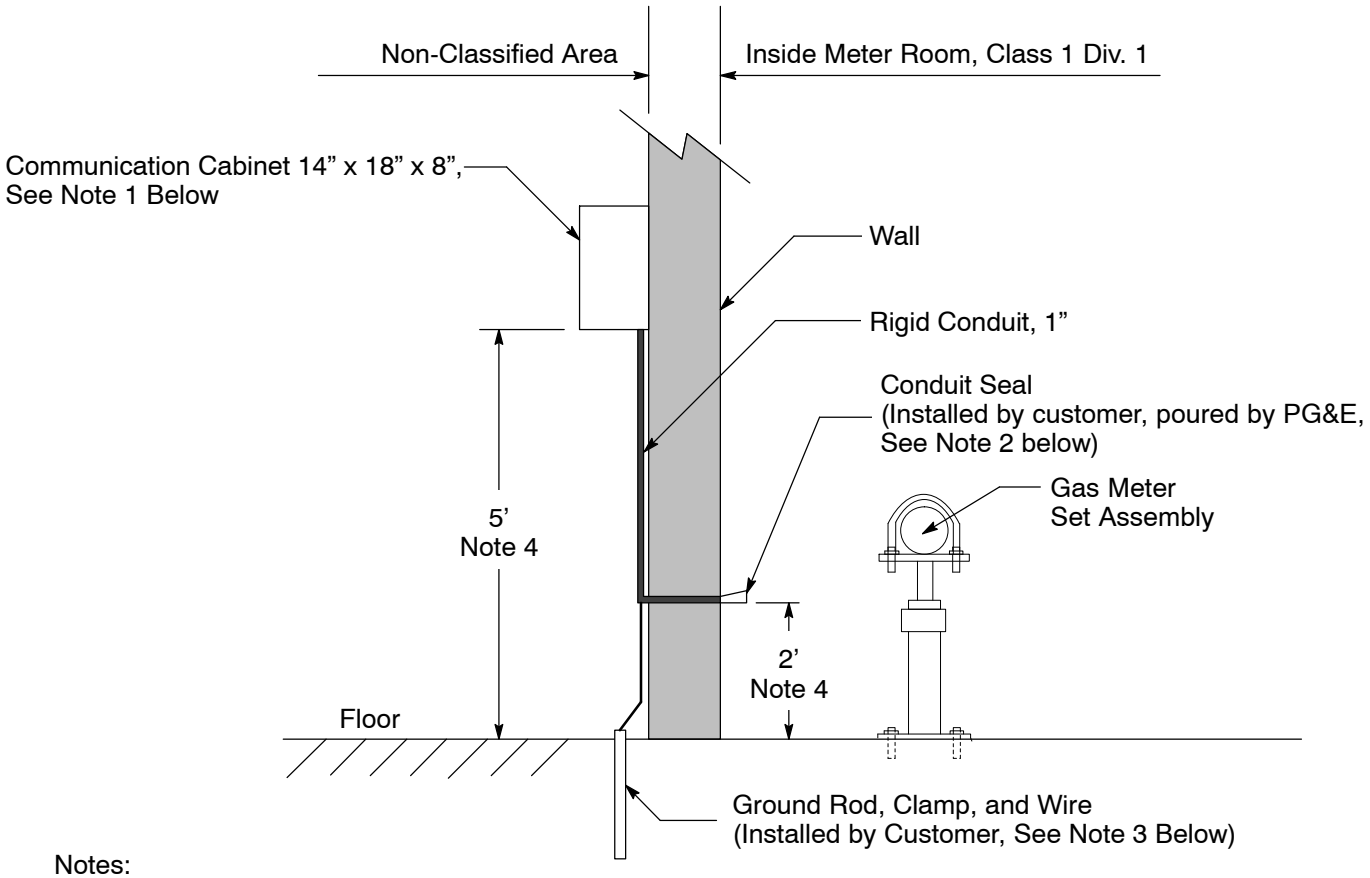

Notes:

1. Cabinet must be large enough for ac outlet, AC/DC converter, EC modem, and customer pulse board.
2. Install conduit seal where conduit exits wall.
3. Ground rod with clamp must be 5/8” in diameter and 8’ long. A #12 AWG insulated green ground wire connects ground rod to the communication cabinet.
4. Dimensions are for guidance only. Final design must be approved by PG&E.

Figure 4
Gas Meter Room
Electric Enclosure and Conduit Arrangement

4. SmartMeter System

PG&E’s SmartMeter Advanced Meter Reading system uses radio frequency technology to transmit meter reads automatically from the gas module. Applicants must make provisions for SmartMeter requirements to ensure that the SmartMeter Advanced Meter Reading system can operate properly. Consult with PG&E for current requirements.

Some, but not all, installation limitation requirements for SmartMeter gas module include:

A. Module must be mounted at least 3” away from the wall in case of metal siding or foil insulation.

B. Module must be installed with a spacer on surfaces other than plaster and wood.

C. Module must be located at least 6” away from pipes, conduit, electrical wires, and other metal objects.

D. Module must be located at least 4” vertically and 3” horizontally from other modules.

E. Module must be located at least 2” below plaster or metal grid ceiling.

F. Module, direct mount or remote, is installed above grade level.

G. A remote module must be installed for any gas meter in a basement.

 PG&E Internal Information, SL2 ©2013 Pacific Gas & Electric Company. All Rights Reserved.

Requirements for Customer-Owned Equipment

1. All customer-installed gas equipment must be installed downstream of the service delivery point. The service delivery point is defined as the gas supply point where PG&E's facilities connect to the customer houseline as follows:
   A. For residential and small commercial meter sets, the service delivery point is the point where the male threads of the applicant's houseline connect to the female threads of PG&E's gas service tee fitting.
   B. Because some commercial and industrial installations do not have service tees installed, the gas supply service delivery point is located at the first weld or fitting after the PG&E-installed bypass valve downstream of the meter.
2. Customer-installed equipment must not connect to utility facilities or obstruct the operation or serviceability of PG&E's piping, metering, and pressure regulating equipment. Customers are responsible for maintaining all customer facilities downstream of the service delivery point.
3. For multiple gas meter installations where the gas meters are supplied by means of a manifold, any installation of a customer automatic gas shut-off device must be installed downstream of the service delivery point for each meter.
4. Where customers elect to install an automatic shut-off device, all piping, valves, or other piping components must be installed downstream of (i.e., after) the gas supply delivery point.
5. When a combustible gas indicator (CGI) device and controller are installed, the following are required:
   A. A gas sensor must be installed no more than 6" from the ceiling of the gas meter room.
   B. The design and installation of all such detection devices and systems must be done in accordance with and comply with the NFPA-72, National Fire Alarm Code.
   C. The controller must be installed outside of the gas meter room and be located near to the gas meter room door.
   D. All wiring and piping of the transmitter to the controller must meet the requirements of NFPA-70, National Electric Code for Class I, Division 1, Group D locations.
   E. An audible alarm and flashing strobe light must be included as a part of the controller system. This alarm system must continue to be operational until the condition that has triggered such an alarm has been determined and is manually reset.
   F. The controller must have the capability to display readings of the percentage of the LEL readings from inside of the gas meter room.
   G. The customer must maintain and calibrate the combustible gas indicator device and all related systems per the manufacturer's recommendations. An up to date inspection card will be mounted on the wall, just inside the door, signifying the gas detection device has been calibrated and is working accurately.
   H. The light switch will continuously and fully engage the fan when turned on.

Access to Meter Room

Applicant must make provisions to allow PG&E access to the gas meter room for emergency response, meter reading, system testing, inspection, and maintenance, in accordance with Gas Rule 16, "Gas Service Extensions."

 ©2013 Pacific Gas & Electric Company. All Rights Reserved.

Target Audience

Design, engineering, estimating, field services, M&C crews, gas T&R, general construction

Definitions

NA

Acronyms and Abbreviations

AC: alternating current
AWG: American wire gauge
cfh: cubic feet per hour
CFR: *Code of Federal Regulations*
CPUC: California Public Utilities Commission
DC: direct current
EC: electronic corrector
EFV: excess flow valve
G.O.: CPUC General Order
LEL: lower explosive limit
NFPA: National Fire Protection Association

Compliance Requirement/Regulatory Commitment

NA

References

Curb Valve Installations, Distribution Systems A-43.2
Gas Service and Mains in Plastic Casing A-75
Plastic Main and Service Installation A-90
Prefabricated Risers A-91
Design Requirements for Company-Owned Gas Regulating Systems Serving Customers H-15
Regulator Vent Lines – Above Ground H-93
Gas Meter Locations J-15
Meter Guard Design and Installation Arrangement J-95
Precast Concrete Vaults & Pits K-10.1
Precast Boxes 24” x 36”, 30” x 48”, and 30” x 60” K-42
Single Meter Enclosure for Domestic Gas Meters K-51
Corrosion Control of Gas Facilities O-16
Vault Inspection Procedure S4446
Gas Service Extensions . . . . . Gas Rule 16
Electric and Gas Service Requirements (Greenbook), Gas Service . . . . . Section 2
Code of Federal Regulations, Transportation of Natural Gas . . . . . 49 CFR 192
CPUC General Order 112-E, Latest Edition . . . . . G.O. 112-E
California Code of Regulations . . . . . Title 24 CCR2, 4, 9,
National Fire Protection Association NFPA-13, 54, 70, 72, 497

Appendices

NA

Attachments

NA

 PG&E Internal Information, SL2 ©2013 Pacific Gas & Electric Company. All Rights Reserved.

Revision Notes

Revision 03 has the following changes:

1. Item 15 added to General Information.
2. Added Figures 1, 2, and 3.
3. Item 10 of Natural Gas Meter Room Design Requirements, removed “maximum of 10 feet” high ceiling and revised to say “the preferred height is not more than 10 feet”.
4. This document is part of Change 66.

Asset Type: Gas Transmission and Distribution
Function: Design
Document Contact: Gas Design Standard Responsibility List

 ©2013 Pacific Gas & Electric Company. All Rights Reserved.

GAS DESIGN STANDARD
VOLUME PULSE OUTPUT CONNECTION FOR GAS METERS

J-65.1

Publication Date: 10-01-13 **Rev. #**04

Purpose and Scope

This gas design standard describes the typical installation of a volume pulser on a gas meter to provide the customer with a volume pulse output under the terms of the Electric and Gas Monitoring Meter Pulse Agreement, Form 79-1049, "Agreement to Install Applicant Requested Common Special Facilities - Gas and Electric Rule 2." Contact advanced metering service and support personnel for any volume pulser request and the latest copy of the pulse agreement form.

General Information

1. Pulsers installed or with connections within a 15' area of the meter-set flanges, valves, and threaded fittings must conform to NEC Class I, Division 2, Group D hazardous area requirements. Conduits must be sealed to prevent gas migration to areas classified as non-hazardous. For the purpose of this document, underground is considered non-hazardous.
2. All wiring between equipment must be in threaded rigid steel or intermediate steel conduit. Where provisions must be made for limited flexibility, liquid-tight flexible metal conduit in lengths not exceeding 3' may be used without securing or supporting the flexible conduit between termination points.
3. For a volume pulse output from an electronic corrector, see Gas Design Standard J-65.2, "Volume Pulse Output Connection for Mercury Electronic Correctors."

PG&E Responsibilities

1. Provide intrinsic safety barrier enclosure to customer ("PG&E Responsibilities," Item 2). (Note: Customer must install the enclosure in the non-hazardous area, at least 15' but no more than 500' away from the gas meter set).
2. Install intrinsic safety barrier Item 3 for 120 Vac or Item 4 for 24 Vdc.
3. Provide and install pulser ("PG&E Responsibilities," Item 1).
4. Connect power wires provided by customer.
5. Connect pulser to intrinsic safety barrier.
6. Connect customer pulse output to intrinsic safety barrier.
7. Check for pulse connection.
8. Complete end-to-end test of the system.
9. Pour conduit seal after successful completion of end-to-end test.

 ©2013 Pacific Gas & Electric Company. All Rights Reserved.

Customer Responsibilities

1. Install enclosure (Table 1, Item 2) in the non-hazardous area, at least 15' but no more than 500' from the gas meter.
2. Install all conduit and wire (Table 1, Items 5 & 6) from intrinsic safety barrier enclosure to no farther than 3' from the gas meter and to customer power source. Leave extra 5' of wire at meter end and an extra 2' of wire at enclosure. (Note: Customer must not make any connections to the intrinsic safety barrier).
3. Install a conduit seal (Table 1, Item 9) on wall or out of ground if conduit is buried as close to the hazardous area transition zone as practicable.
4. Supply 24 Vdc power for intrinsic safety barrier. Alternatively, customer can supply 120 Vac. Provide PG&E with information on which type of power (120 Vac or 24 Vdc) must be provided.

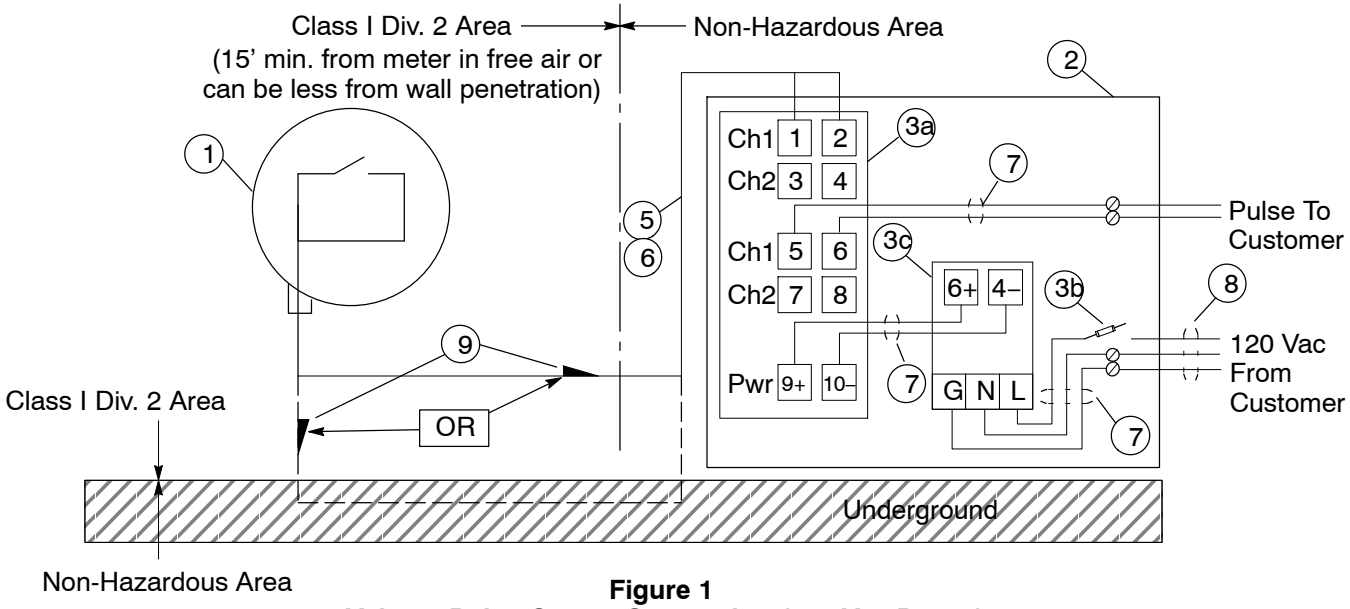

Figure 1
Volume Pulse Output Connection (120 Vac Power)

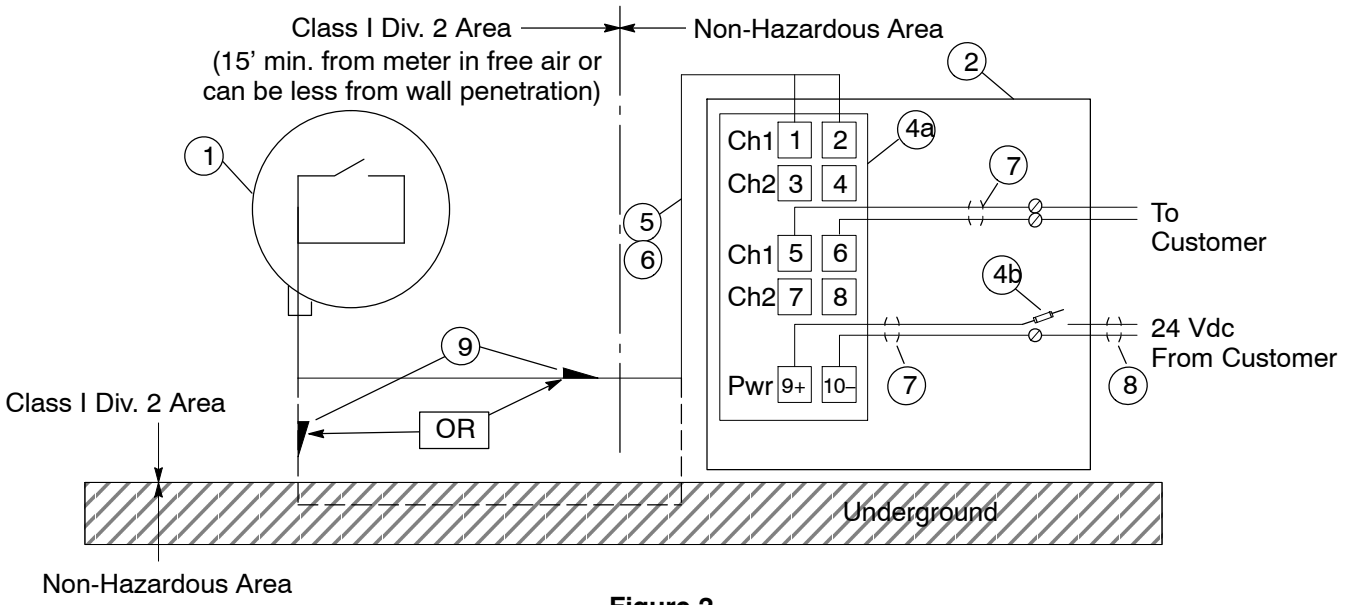

Figure 2
Volume Pulse Output Connection (24 Vdc Power)

 ©2013 Pacific Gas & Electric Company. All Rights Reserved.

Table 1 Bill of Materials

Item	Quantity by Customer	Quantity by PG&E	Description
1	–	1	Pulser Specified in Table 2
2	–	1	Intrinsic Safety Barrier Enclosure - Hoffman QLINE E, Type 4X, Model Q251815ABE with Mounting kit QEMFK (installed by customer)
3	–	1	Intrinsic Safety Barrier system (120 Vac version) consisting of: a) Intrinsic Safety Barrier - 2-Chanel, 24 Vdc, Pepperl+Fuchs KCD2-SR-EX2 or equal b) Fused Power Disconnect. Phoenix UK 5 - HESI with 3 amp fuse c) Power Supply - 120Vac/24Vdc, Mean Well DR-4524
4	–	1	Intrinsic Safety Barrier system (24 Vdc version) consisting of: a) Intrinsic Safety Barrier - 2-Chanel, 24 Vdc, Pepperl+Fuchs KCD2-SR-EX2 or equal b) Fused Power Disconnect - Phoenix - UK 5 - HESI with 3 amp fuse.
5	1	–	Conduit, 1/2” Rigid, and 1/2” Liquid-Tite Metallic Flex (as required)
6	1	–	Three-Conductor Shielded Cable[1], Stranded #22 AWG , Belden 9363, or Equal (for signal wiring)
7	–	1	Single Conductor #18 AWG for power wiring within enclosure
8	1	–	Single Conductor #12 AWG max for power wiring from customer power source (Note: Wire size used must be based on customer breaker size providing the power to enclosure)
9	1	–	Conduit Seal, EYS 1/2”, Crouse-Hinds

[1] NEC Type PLTC per Article 725, which is approved for wiring in Class I Division 2 hazardous areas.

Table 2 Volume Pulsers for Gas Meters

Pulser Make and Model	Gas Meter Make	Gas Meter Model
American RVP-FI [1]	American Diaphragm Meters	AC 175, AC 250, AL 175, AL 310, AL 425, AT 175, AT 210, AT 250
	Rockwell Diaphragm Meters	175, 175S, 250, R275, 310, R315, 415
	Schlumberger/Sprague Diaphragm Meters	240, 250, 305, 400, 400A, 675, 1000, 2, 3, 4, 5, 5A
American RVP-VI [1] or Mercury 206 Pulse Transmitter [2, 3]	American Diaphragm Meters	AC 630, AL 800, AL 1000, AL 1400, AL 2300, AL 5000, 25-B, 35-B, 60-B, 80-B, 250-B, 500-B
	Sensus/Invensis/Equimeter/ Rockwell Diaphragm Meters	750, 800, 1000, 3000, 5000, 10000, 2, 2-1/2, 3, 4, 4-1/2, 5
	Itron/Actaris/Schlumberger/ Sprague Diaphragm Meters	675A, 800A, 1000A

[1] One pulse per revolution of the index test hand.
[2] One pulse per revolution of the instrument drive.
[3] American Meter Mounting Kit Part #20-4187, MS Code 230504 is required to install Mercury 206 Pulse Transmitter on Rockwell and Sprague meters.

Ordering Instructions

When ordering a volume pulser, specify the make and model of the pulser and the make and model of the gas meter.

 ©2013 Pacific Gas & Electric Company. All Rights Reserved.

Target Audience

Gas control technicians, gas measurement technicians, gas transmission and regulation (T&R) supervisors, gas estimators and gas engineers

Definitions

NA

Acronyms and Abbreviations

Vac: Volt alternating current
AWG: American wire gauge
Vdc: Volt direct current
NEC: *National Electric Code*

Compliance Requirement/ Regulatory Commitment

NA

References

Volume Pulse Output Connection for Mercury Electronic Correctors J-65.2
Agreement to Install Applicant Requested Common Special Facilities - Gas and Electric Rule 2 79-1049

Appendices

NA

Attachments

NA

Revision Notes

Revision 04 has the following changes:

1. Added AC-630 in Table 2.
2. This document is part of Change 66.

Asset Type: Gas Metering
Function: Design and Construction
Document Contact: **Gas Design Standard Responsibility List**

 PG&E Internal Information, SL2 ©2013 Pacific Gas & Electric Company. All Rights Reserved.

Prepared by: JZB1

METER GUARD DESIGN AND INSTALLATION ARRANGEMENT

J-95

Department:	Gas Distribution and Technical Services	**Section:**	Gas Engineering and Planning
Approved by:	R. L. Thierry	**Date:**	12-01-04

Rev. #02: This document replaces Revision #01. For a description of the changes, see Page 6.

Purpose and Scope

This gas standard provides guidelines and instructions for selecting and installing new and retrofitted gas meter guards for residential and commercial meters subject to vehicular traffic. These meter guards are designed to protect against incidental bump damage during typical low-speed maneuvering (i.e., turning, backing, etc.). Post installation shall be done in accordance with Utility Operations Standard S4412, "Protection of Underground Infrastructure."

References

References	Gas Standard
Gas Meter Locations	J-15
Electric and Gas Service Requirements, Meter Protection	
California Fire Code, Section 1106, Gas Meters and Piping	
DOT 49 CFR Section 192.353, Customer Meters and Regulators: Location	
American Welding Society, Safety and Health Fact Sheet No. 25: Metal Fume Fever	

General Information

Physical protection shall be provided for any gas meter set located in one of the areas described below:

1. Type 1 Locations

   Within 3' of the following:

   - A single-family driveway/parking area.
   - A roadway, street, alley, or driveway with a curb.

   Within 8' of the following:

   - A roadway, street, alley, or driveway without a curb.
   - Multi-family driveway/parking area.

2. Type 2 Locations

   Within 3' of the following:

   - A commercial refuse container location.

   Within 8' of the following:

   - A commercial or industrial driveway/parking area.
   - A loading dock/freight handling area.

Selection and Installation

If a risk of vehicular damage exists at a location, the meter should be protected by barrier posts. The following provides guidelines for the physical protection of gas meter sets. Protect gas meter sets that are at risk in residential areas using minimum 2" diameter, Schedule 40 steel posts. Protect gas meter sets that are at risk in commercial and industrial areas using concrete-filled, minimum 4" diameter, Schedule 40 steel posts. Install all utilities before installing the barrier posts. Barriers should be provided on all sides of the meter set that are exposed to vehicle hazards and that are not already protected by existing structures. The final arrangement of the barriers should not allow a vehicle approaching at any angle to damage the meter set. The meter posts should be installed so that they do not obstruct

Dig Safely: Call 1-800-227-2600 before you dig.

vehicular traffic, inconvenience customers, or hamper gas meter maintenance and meter reading. All posts should be installed to have the same height.

1. Protection for Type 1 Locations

   A 2” diameter post should be used to provide protection for meter sets in Type 1 locations. See Figure 1, Figure 2, Figure 3, and Figure 4 for installation instructions.

2. Protection for Type 2 Locations

   A 4” diameter post should be used to provide protection for meter sets in Type 2 locations. See Figure 1, Figure 2, Figure 3, and Figure 4 for installation instructions.

Note

When field conditions do not permit exact compliance with these requirements, alternatives may be proposed. Alternative meter guard arrangements must sufficiently protect the meter set and ensure adequate distance for maintenance and meter reading. A meter guard may be used in conjunction with man-made barriers such as wing-walls, planters, fences, etc., to provide protection; these barriers may be a 6” or higher curb, large tree, permanently installed planter, barrier post(s), fence, or other similar permanent structure.

Meter Guard
Design and Installation Arrangement

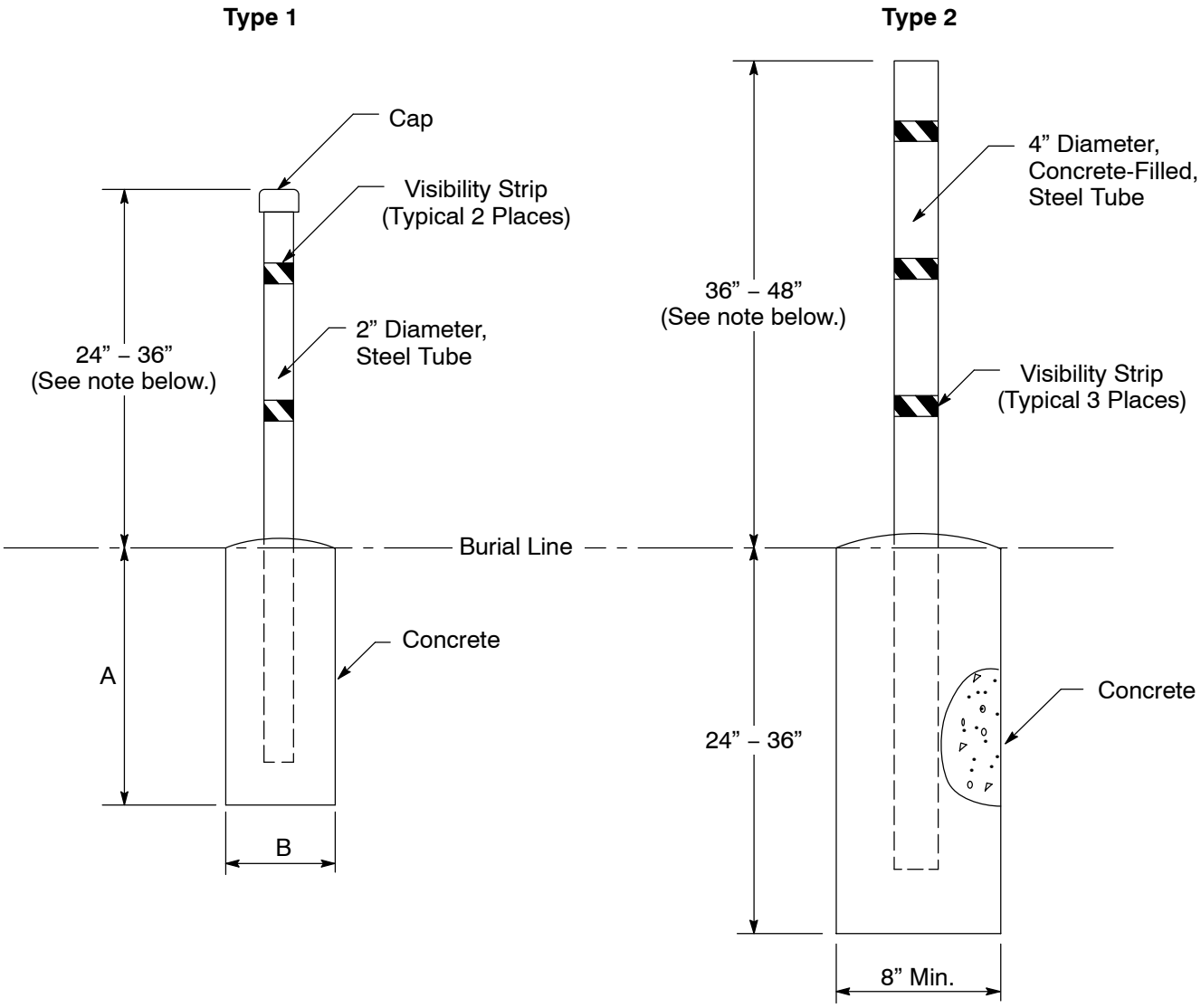

Note: Post should extend 6” above the highest point on the meter set, but not to exceed maximum height above grade.

Figure 1
Post Installation

Table 1 Dimensions for Concrete Footing

A (Inches)	B (Inches)
12	8
15	8
20	6

Dig Safely: Call 1-800-227-2600 before you dig.

Meter Guard
Design and Installation Arrangement

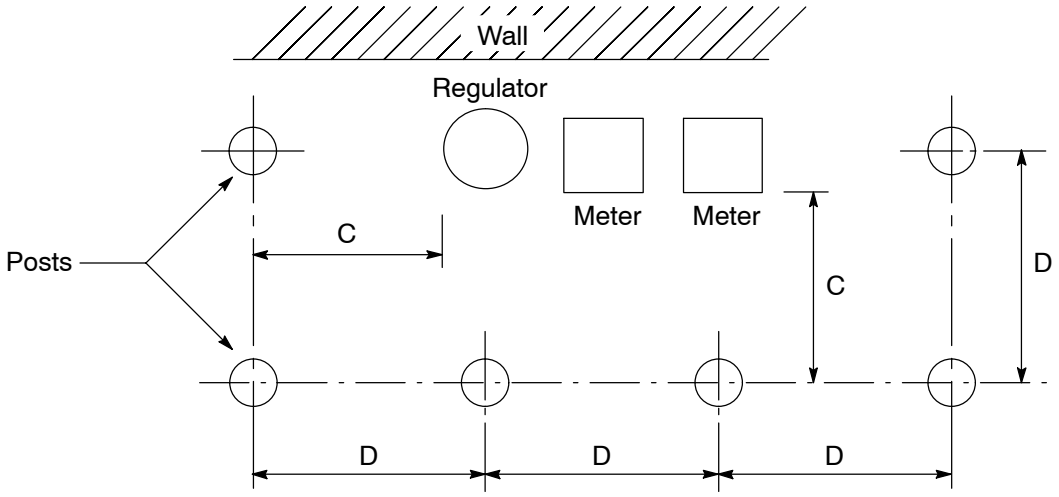

Note: The concrete footing should be at least 6” away from any point on the riser. If the post is positioned above an underground gas service, a minimum distance of 3” should be maintained between the service and the concrete footing.

Figure 2
Multiple Meters Post Arrangement

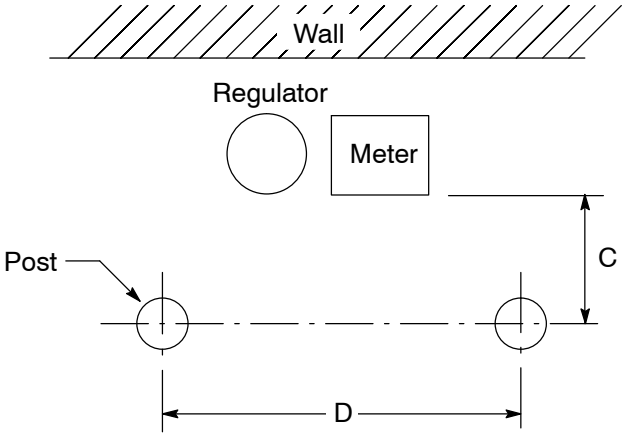

Figure 3
Single Meter Post Arrangement

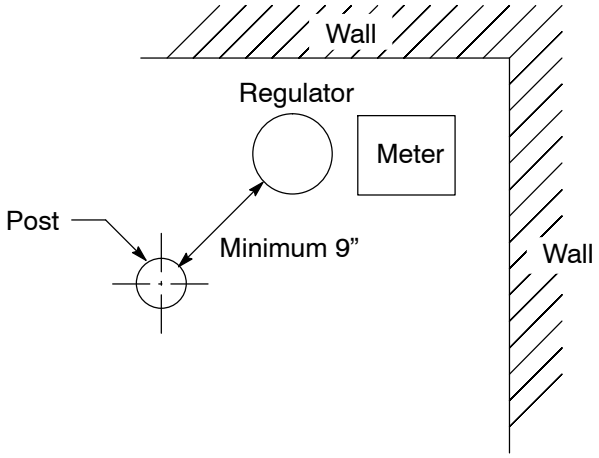

Figure 4
Single Post Arrangement

Table 2 Dimensions for Post Arrangement

C [1] (Inches)	Maximum D [2] (Inches)
Less than 12	Space posts to prevent vehicle from contacting meter set but leaving room for meter access and maintenance.
12	18
15	24
18	30
24	42

[1] Distance to meter or regulator.
[2] May not be more than 42”.

Dig Safely: Call 1-800-227-2600 before you dig.

Meter Guard
Design and Installation Arrangement

Table 3 Post Materials

Description	Length	Code
2” Diameter, Schedule 40, Galvanized Pipe	56”	150117
4” Diameter, Schedule 40, Galvanized Pipe	78”	150122
Strip Visibility, Flexible, 2” x 12”	–	013163
2” End Cap, Galvanized	–	150119

Riser Protection Method

This method may be implemented in cases where only impact perpendicular to the structure is a threat. If there is a threat of lateral impact, install standard meter posts.

A 4-1/2” Split Steel Pipe With Mounting Flanges

- Use caution when welding flanges onto galvanized steel. Make sure the area is well-ventilated or wear an approved respirator.
- Bolt pipe directly to the existing structure.
- Use to cover any portion of the riser in danger of vehicular damage.
  Caution: do not cover service valve.
- See Figure 5 and Figure 6 for installation instructions.

Note: If the riser is less than 12” in height and 6” from the supporting structure, it does not require protection from vehicular damage. As per the Department of Transportation’s Bumper Standard (49 CFR Part 581), bumpers must be between 16” and 20” above the ground, preventing a car from being capable of hitting a riser less than 12” tall.

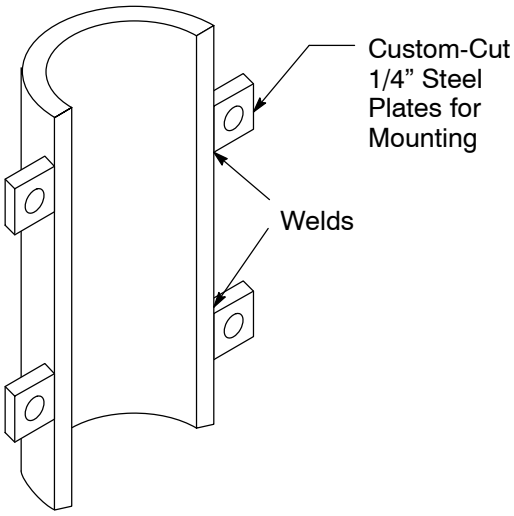

Figure 5
Riser Protection Method

Dig Safely: Call 1-800-227-2600 before you dig.

Meter Guard
Design and Installation Arrangement

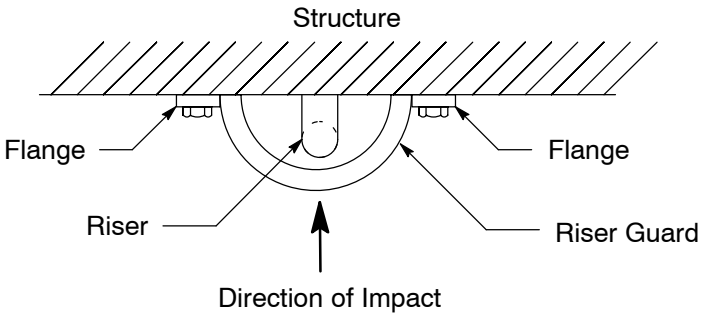

Figure 6
Riser Protected by Riser Guard

Table 4 Materials for Riser Protection

Description	Code
4-1/2" "Half-Rolled" Steel Pipe, Galvanized	150133

Revision Notes

Revision 02 has the following changes:

1. Corrected the accidentaly reversed bullets in Item 1 of the "General Information" section on Page 1.
2. This document is part of Change 55.

Dig Safely: Call 1-800-227-2600 before you dig.

Prepared by: JTMZ

SINGLE METER CABINET FOR DOMESTIC GAS METERS

K-51

Asset Type:	Gas Metering	**Function:**	Design and Construction
Issued by:	S. A. Robinson Original Signed By	**Date:**	11-18-11

Rev. #01: This document replaces Revision #00. For a description of the changes, see Page 4.

Purpose and Scope

This numbered document provides specifications and ordering information for single, residential gas meter cabinets.

Safety Note

The cabinets shown in this numbered document are intended to be built into the wall of a structure. The fabricated non-flammable/non-metallic cabinet and door(s) **must** be sealed at all joints and penetrations from the inside with caulking or other appropriate sealant and **must** be vented to the outside to prevent any gas from leaking into the structure. If constructed from wood, it must be lined with sheet rock or other non-flammable material.

The prefabricated American Gas Products (AGP) ABS plastic cabinet part number J-40 (with solid cover) is an approved alternate for the fabricated cabinet. Order from American Gas Products (AGP) Inc. P.O. Box 4777, Anaheim, CA 92803.

General Information

Fabricated Non-Flammable/Non-Metallic Cabinets (see Figure 1)

1. Cabinets and door(s) shall be made from non-flammable wall board, or other suitable material. If constructed from wood, it must be lined with sheet rock or other non-flammable material. Review local codes to ensure that the cabinet complies with any fire rating requirements.
2. Cabinets and cabinet doors shall not be fabricated from metal in order to minimize the potential for interference with SmartMeter radio frequency (RF) signal transmission.
3. Seal all joints and penetrations from the inside with caulking or other appropriate sealant.
4. The box width and height dimensions are the minimum inside dimensions needed for maintenance and operating activities. These dimensions may be increased to suit local conditions, but should be kept as close as practical to the specified minimums to discourage customers from using the box for storage purposes.
5. The right side door should be louvered or otherwise vented at the top and bottom as shown. It shall be held closed with two slide-bolt latches located on the outside. Other types of latches can be used.
6. Lock the solid door closed using two slide-bolt latches located on the inside. Both doors shall open fully to allow servicing of the meter and regulator.
7. Electrical wiring is permitted in the cabinet only if the wiring is within sealed conduit with no joints, or the wiring meets the requirements of the National Electric Code for Class I, Division 1 areas. The conduit must not interfere with the meter, regulator, or piping.
8. Take care not to paint the cabinet vents or the regulator's internal relief valve (IRV) vent termination fitting openings and thereby obstruct the flow of air or gas.

Single Meter Cabinet for Domestic Gas Meters

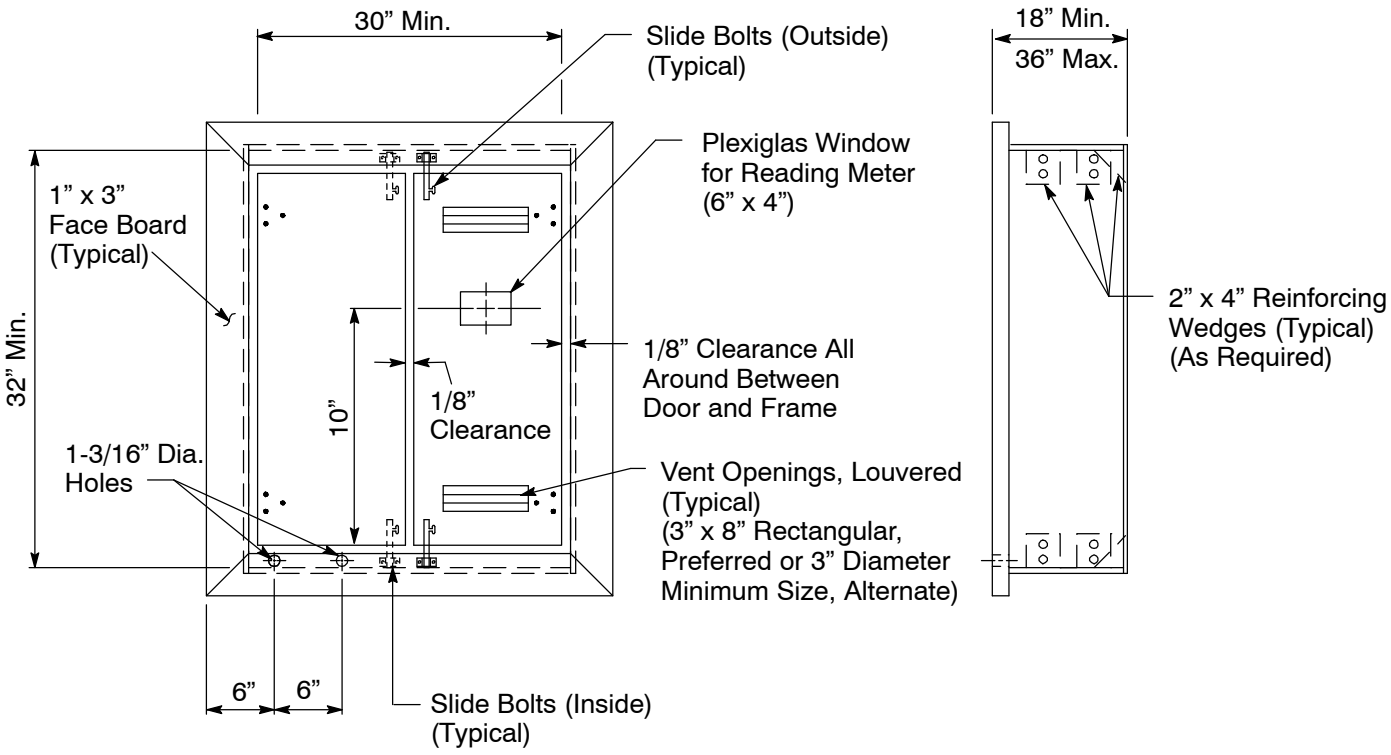

Figure 1
Meter Cabinet

Prefabricated Plastic Cabinets (see Figure 2)

1. The cabinet is designed to fit between studs on 16” centers.
2. Add a second 2”x4” on each side of the cabinet to support the flange.
3. Meter sizes up to AC630 will fit in the cabinet.
4. Align the gas service riser with the “R” marking on the left side of the cabinet and stub out the connection to the customer’s houseline to align with the “HL” marking on the right side of the cabinet. Do not drill into or penetrate the back, sides, top, or bottom of the cabinet.
5. Locate the meter to align with the figure outlined on the rear of the cabinet and connect the inlet and outlet piping as shown in Figure 3 on Page 4.
6. The cabinet cover may be painted to match the building.

Single Meter Cabinet for Domestic Gas Meters

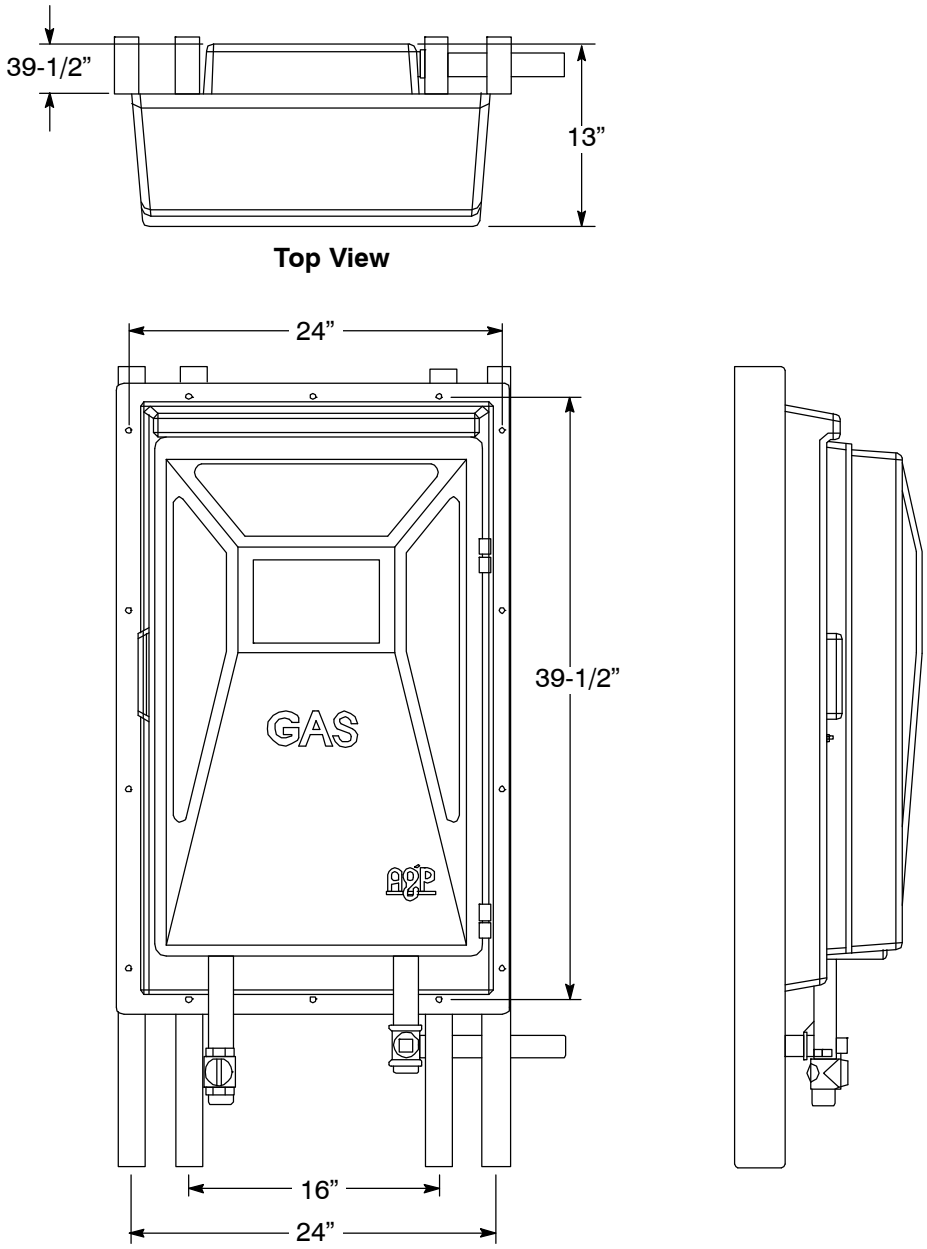

Figure 2
Prefabricated Plastic Meter Cabinet Dimensional Views

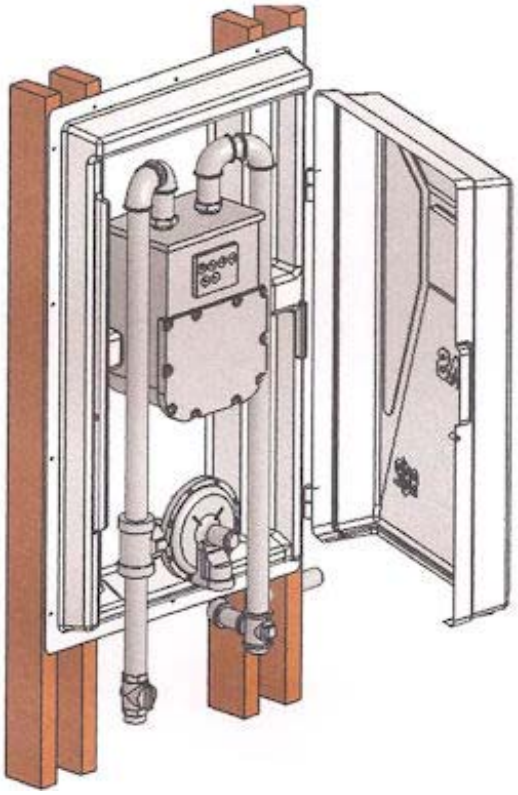

Figure 3
Prefabricated Plastic Meter Cabinet Piping Installation View

Revision Notes

Revision 01 has the following changes:

1. Added alternate prefabricated plastic cabinet.
2. Changed description to “Cabinet” to agree with Numbered Document J-15.
3. Added non-metallic cabinet door material requirement for SmartMeter RF signal transmission.
4. Added maximum cabinet depth of 36”.
5. This document is part of Change 64.

Prepared by: C1K8

GAS PIPELINE UNDERGROUND WARNING TAPE

L-16

Asset Type:	Gas Transmission and Distribution	**Function:**	Design & Construction
Issued by:	S. van Oosten Original Signed By	**Date:**	05-01-13

Rev. #00: This is a new document. For a description of the changes, see Page 2

Purpose and Scope

This numbered document provides guidelines for purchasing and installing underground warning tape above gas pipelines. The installation of the warning tape applies to all open trench installation of gas pipelines.

Acronyms

References	Document
Design and Construction Requirements Gas Lines and Related Facilities	A-36
Plastic Gas Distribution System Construction and Maintenance	A-93.1
Joint Trench	S5453

General Information

1. A warning tape is to be installed in open trench installation over gas pipelines in both Transmission and Distribution facilities. This includes trenches, bell holes, excavations for repair purposes and riser replacements. The warning tape is intended for excavator digging in the “tolerance zone” to strike the warning tape prior than the pipeline. When the warning tape is exposed and grabbed with excavating equipment, it stretches without breaking, thus alerting the excavator of the gas facility below.
2. Install 6” wide warning tape above the gas pipeline at least 12” below grade, and no closer than 12” from the pipe. Installation should provide the greatest distance between the pipeline and the tape as possible. Install the tape along the length of the excavation. Ensure that the tape overlaps when two or more pieces of tape are used.

EXCEPTION: When a joint trench design does not allow for installment of warning tape within the “warning tape installation zone”, install the warning tape a minimum of 6” above the gas pipeline, and below the facility above the pipe.

3. Warning tape shall be brightly colored yellow and marked “Caution: Gas Line Buried Below” or marked with a similar notification.
4. Warning tape shall be stored in such a manner that limits Ultraviolet (UV) exposure.

Gas Pipeline Underground Warning Tape

Figure 1
Gas Pipeline Underground
Warning Tape

Table 1 Material Specification for Figure 1

Description	Dimensions	Material Code
1 Roll (Terra Tape)	6” x 1000’	379947

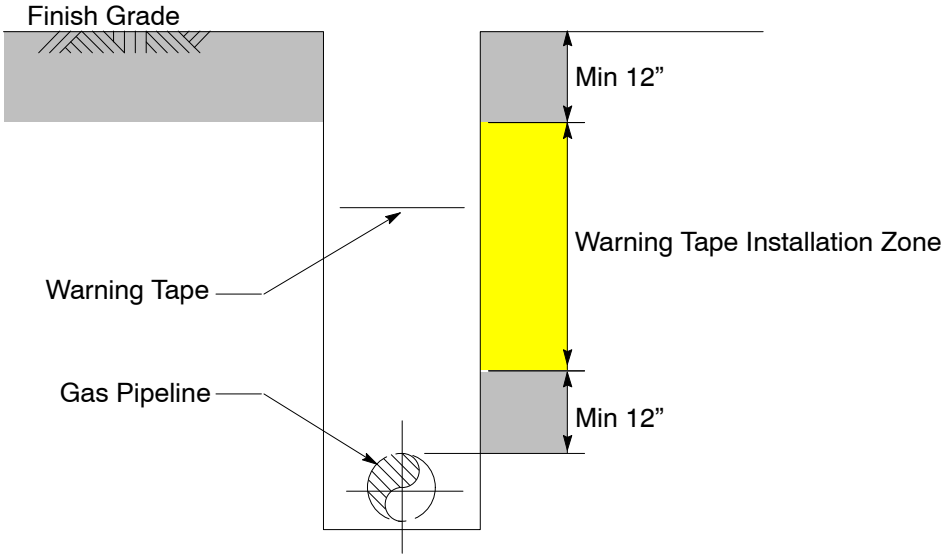

Figure 2
Gas Pipeline Underground Warning
Tape Installation

Revision Notes

Revision 00 has the following changes:

1. This is a new document.
2. This document is part of Change 66.

GAS DESIGN STANDARD
PG&E APPROVED GAS MATERIALS MANUFACTURERS

N-01

Publication Date: 01-07-15 **Effective Date:** 01-07-15 **Rev.** 03

Purpose and Scope

This Gas Design Standard (GDS) provides a list of PG&E approved manufacturers.

General Information

1. This GDS may be updated between book publishings. Contact your local PG&E representative to obtain the latest version.
2. Each approved manufacturer does not necessarily supply all of the approved variations of each commodity.
3. If no plant location is listed, then material from all manufacturing locations operated by the named manufacturer is approved for use. If a plant location is named, then only material manufactured at the specifically approved plant is acceptable.
4. For further information, refer to the SAP Qualified Suppliers List.

Table 1 PG&E Approved Manufacturers

Material	Approved Manufacturer (Plant)	Document Reference
Gaskets Full Face and Flat Ring	Garlock PSI Linebacker	B-45, B-45.1
Insulating Joints	Kerotest-Zunt GPT-PSI (Houston, TX)	O-25
Meter Manifolds (1-1/4" and 2" Sizes)	Agile-R.W. Lyall	J-52.1
Meter Swivels and Swivel Nuts	Advanced Engineering Corp	J-50
Meter Valves	A. Y. McDonald Jomar Mueller	F-80
Plastic (PE) Cast Iron to Polyethylene Transition Fittings	Dresser	B-91.5
Plastic (PE) Electrofusion Fittings & Tapping Tees	Innogaz IPEX-Friatec	B-90.3
Plastic (PE) Excess Flow Valves	Perfection	A-93.3
Plastic (PE) Fittings Mechanical Transition	Chicago Fittings Continental Mueller	B-91
Plastic (PE) Mechanical Fittings	Continental "Constab" Perfection "Permasert"	B-91.1, EMS 4761
Plastic (PE) Pipe & Tubing	JM Eagle (Tulsa, OK) KWH (Huntsville, ON) KWH (Saskatoon, SK) Performance Pipe (Fairfield, IA) Performance Pipe (Knoxville, TN) Performance Pipe (Pryor, OK) Performance Pipe (Reno, NV) Performance Pipe (Williamstown, KY) PolyPipe/Dura-line (Gainesville, TX)	A-93, EMS 2502, EMS 2503

 ©2015 Pacific Gas & Electric Company. All Rights Reserved.

Table 1 PG&E Approved Manufacturers (continued)

Material	Approved Manufacturer, Plant	Document Reference
Plastic (PE) Saddle Fittings	Central Plastics Continental Elster-Perfection Performance Pipe US Poly	B-90.1, EMS 4758, EMS 4761
Plastic (PE) Socket and Butt Fusion Fittings	Central Plastics Performance Pipe RW Lyall US Poly	B-90, EMS 4758
Plastic (PE) System Accessories	Continental Performance	B-90.2
Plastic (PE) Valves	Andronaco Poly-Valve Perfection	F-90
Risers Pre-Fabricated Gas Service and Riser Kits	Elster-Perfection (Geneva, OH) RW Lyall (Corona, CA)	A-91, EMS 6421, EMS 7030
Steel Ball Valves	Grove/Cameron (Ville Platte, LA & Weifang, China) MSA (Ostrava, Czech Republic) PBV-USA (Stafford, TX) Quarter Turn Delta/Valvitalia, (Milan, Italy) Tested at either Ponca City, OK or Deer Park, TX	F-20, F-21, F-21.1, F-21.2
Steel Bolting Material	Lamons Lonestar	B-46
Steel Extension Stopper Fittings	Mueller	C-16.1, C-16.5
Steel Fittings Threaded, including Pipe Nipples	Advance Agile-Lyall Bonney Forge Ward Westbrook Manufacturing	B-10, B-10.1, B-11, B-11.1, B-12, B-12.1, B-12.2, B-12.3, B-12.4, B-13, B-13.1, B-13.2, B-13.3, B-13.4, B-14, B-14.1, B-14.2, B-15, B-15.1
Steel Flanges Weldneck and Slip-on	Boltex Galperti	B-43
Steel HFW (ERW) Pipe	American ACIPCO (Birmingham, AL) California Steel Industries (CSI) (Fontana, CA) Lakeside Steel (Stelpipe), (Welland, Ontario) Stupp Corp. (Baton Rouge, LA) Tex-Tube (Houston, TX) U.S. Steel (McKeesport, PA) Wheatland Tube (Warren, OH)	A-15
Steel High Yield and Standard Grade Fittings	Custom Alloy (Highbridge, NJ) Dynamic Products Inc. (Houston, TX) Hackney (Ladish, Russellville, AR & Enid, OK) Tube Forgings of America (Portland, OR)	B-20, B-20.2
Steel One Piece Line Stopper Fittings	Mueller, TDW	C-16.3, C-16.4, C-64.1
Steel Save-A-Valves	Mueller	C-14

 ©2015 Pacific Gas & Electric Company. All Rights Reserved.

Table 1 PG&E Approved Manufacturers (continued)

Material	Approved Manufacturer, Plant	Document Reference
Steel SAWH Pipe	Berg Steel Pipe Corp. (Mobile, AL)	A-15
Steel SAWL Pipe	Berg Steel Pipe Corp. (Panama City, FL) Dura-Bond (Bethlehem Steel) (Steelton, PA) Nippon Steel (Kimitsu Works, Japan)	A-15
Steel Seamless Pipe	IPSCO (Koppel Steel) (Ambridge, PA) Lakeside Steel (Welland, Ontario) Tenaris (Dalmine) (Bergamo, Italy) Tenaris (Siderca) (Campana, Argentina) Tenaris (Tamsa) (Veracruz, Mexico) U.S. Steel (Fairfield, AL) U.S. Steel (Lorain, OH) Vallourec Star, LP (Youngstown, OH) Voest-Alpine (Kindberg, Austria)	A-15
Steel Service Tees	Continental Mueller	C-10, C-10.1, C-11, C-13, B-91
Steel Sleeves & Re-Inforcing Pads	Dynamic Products (Houston, TX) Ryco Steel (Benicia, CA)	A-50, A-52
Steel Two Piece Line Stopper Fittings	Mueller	C-15.2, C-15.3, C-15.4
Steel Two Piece Line Stopper Fittings with Bottom Connection	Mueller	C-16.2
Steel Two Piece Line Stopper Fittings with Bottom or Side Connection	TDW	C-63
Steel Two Piece Stopple Style Line Stopper Fitting	Blackhawk TDW	NA
Steel Unions Insulated Threaded	Central Plastics George Fisher	O-23

 ©2015 Pacific Gas & Electric Company. All Rights Reserved.

Publication Date:01-07-15 Effective Date: 01-07-15 Rev. 03

Target Audience

Engineering, construction inspection, and incoming supplier inspection personnel

Definitions

NA

Acronyms and Abbreviations

PE Polyethylene

Compliance Requirement/Regulatory Commitment

Subpart B–Materials . . . . . 49 CFR 192

References

Code Numbers for Steel Pipe A-15
Branch Connection Reinforcing Pad for Steel Gas Mains A-50
Hot Tap Branch Connection Requirements A-52
Prefabricated Risers A-91
Polyethylene Pipe Specifications and Design Considerations A-93
Plastic Excess Flow Valves A-93.3
Standard Pipe Caps B-10
Standard Pipe Plugs B-10.1
Standard Threaded Pipe Couplings B-11
Threaded Reducers (Bell Reducers) B-11.1
Standard 90 Degree Threaded Elbows B-12
Standard Reducing 90 Degree Elbows B-12.1
Standard 90 Degree Threaded Street Elbows B-12.2
45° Threaded Elbow B-12.3
Reducing Street Elbow B-12.4
Standard Threaded Pipe Nipples B-13
Extra Heavy Pipe Nipples B-13.1
Threaded One End Pipe Nipples (TOE) B-13.2
Concentric Reducing Nipple (Swage Nipple) B-13.3
Branch Nipple B-13.4
Standard Threaded Tee B-14
Standard Threaded Street Tee B-14.1
Reducing Threaded Tee B-14.2
Standard Threaded Unions B-15
Threaded Bushing B-15.1
Steel Butt-Welding Fittings B-20
High Yield Butt-Welding Fittings B-20.2
Weldneck and Slip-On Flanges B-43
Full Face and Flat Ring Gaskets B-45
Glass-Epoxy Retainer Gaskets B-45.1
Bolting Material B-46
Plastic System Socket and Butt Fusion Fittings B-90
Plastic System Saddle Fittings B-90.1
Polyethylene (PE) System Accessories B-90.2
Electrofusion Fittings and Tapping Tees B-90.3
Mechanical Transition Fittings for Plastic Systems B-91
Polyethylene (PE) System Mechanical Fittings B-91.1
Cast Iron to Polyethylene Transition Fittings B-91.5

 ©2015 Pacific Gas & Electric Company. All Rights Reserved.

References, continued

Mueller Service Tees Types H-17500 and H-17501 . . . . . C-10
Mueller Flanged Tees Type H-17505 and H-17506 . . . . . C-10.1
Mueller Valve, Tee-Type H-17656 . . . . . C-11
Service Tapping Tee with Coupon Retaining Punch C-13
Mueller Save-A-Valve Nipples C-14
Mueller Welding Line Stopper Fittings H-17055, H-17056, H-17155, and H-17156 . . . . . C-15.2
Mueller Welding Line Stopper Fittings H-17255, H-17256, and H-17257 . . . . . C-15.3
Mueller 6” and 8” Thin Wall Welding Line Stopper Fittings C-15.4
Mueller Extension Stopper Fitting for Lateral Connections C-16.1
Mueller Welding Line Stopper Fitting With Bottom Connection C-16.2
Mueller H-17190 Welding Line Stopper Fitting C-16.3
Mueller H-17191 Mechanical Joint Line Stopper Fitting C-16.4
Mueller Extension Stopper Fitting for Lateral Connection C-16.5
T. D. Williamson M-Stopp Fitting (Mueller Compatible) C-63
TDW Shortstopp II: 6”-12” Fitting C-64.1
Standard Ball Valve List: 1/4” Through 2” F-20
Standard Ball Valve List: Carbon Steel 2” Through 24” F-21
Material Specification for Carbon Steel Ball Valves F-21.1
Material Specification for Pressure/Flow Controlling Ball Valves F-21.2
Meter Valves F-80
Plastic System Valves F-90
Meter Swivels and Swivel Nuts J-50
Gas Meter Manifolds (1-1/4” and 2” Sizes) J-52.1
Insulated Threaded Unions O-23
Insulating Joints O-25
Specifications for Furnishing and Delivery of Polyethylene Plastic Tubing . . . . . EMS 2502
Specifications for Furnishing and Delivery of Polyethylene Plastic Piping . . . . . EMS 2503
Specifications for Furnishing and Delivery of Heat Fusion Fittings for Polyethylene (PE) Plastic Gas Piping and Tubing . . . . . EMS 4758
Specifications for Furnishing and Delivery of Non-Corrodible Mechanical Fittings for Polyethylene (PE) Plastic Gas Piping and Tubing . . . . . EMS 4761
Specifications for Furnishing and Delivery of Pre-Fabricated Metal-Cased Pastic 3/4” x 5/8” O.D. (1/2” CTS SDR 7) and 3/4” x 1-1/8” O.D. (1” CTS SDR 11.5) Gas Service Risers . . . . . EMS 6421
Specifications for Furnishings and Delivery of Pre-Fabricated Metal-Cased Plastic 1-1/4” x 1-1/8” O.D. (1” CTS SDR 11.5) and 1-1/4” x 1.660” O.D. (1-1/4” IPS SDR 10) Gas Service Risers . . . . . EMS 7030

Appendices

NA

Attachments

NA

 ©2015 Pacific Gas & Electric Company. All Rights Reserved.

Revision Notes

Revision 03 has the following changes:

1. In Table 1, alphabetized all columns.
2. In Table 1, added the manufacturer, Garlock, to the list of Full Face and Flat Ring Gaskets and Document Reference GDS B-45.1.
3. In Table 1, relabeled “High Yield Fittings” to “Steel High Yield and Standard Grade Fittings.”
4. In Table 1, added the manufacturer Vallourec Star, LP (Youngstown, OH) to list of Seamless Pipe Manufacturers.
5. In Table 1, added row for Insulating Joint manufacturers.
6. In Table 1, miscellaneous formatting and minor editing were done for clarity.
7. In Table 1, added “Steel Service Tees, Steel Sav-A-Valves, and Line Stopper Manufacturers and References.”
8. In Table 1, added Dynamic as a manufacturer for “Steel Seams and Reinforced Pads.”
9. This GDS is part of Change 67.

Asset Type: Gas Transmission and Distribution
Function: Design
GDS Contact: **Gas Design Standard Responsibility List**

 ©2015 Pacific Gas & Electric Company. All Rights Reserved.

Prepared by: ABB1

CORROSION RESISTANT GROUND RODS AND GROUND ROD CLAMPS

013109

Asset Type:	Electric Distribution	**Function:**	Design and Construction
Issued by:	Dan Mulkey (DHM3)	**Date:**	06-29-12

Rev. #06: This document replaces PG&E Document 013109, Rev. #05. For a description of the changes, see Page 3.

This document is also included in the following manual:

- *Electric and Gas Service Requirements Manual* (Greenbook)

Purpose and Scope

This document describes corrosion resistant ground rods and ground rod clamps.

References	Location	Document
Methods of Grounding Steel Transmission Poles and Towers	TIL	012566
Method of Grounding Fences and Wire Trellises	TIL	020607
Installation of Grounds on Wood Pole Transmission and Distribution Lines	OH: Transformers	021904
Ground Resistance and Resistivity Measurements	ELS	053241

Conventional Ground Rods

Notes

1. Ground rods shall meet the requirements of ANSI Spec. C33.8 (UL 467).
2. Welded-type connections may be used when welding equipment is available on the job.

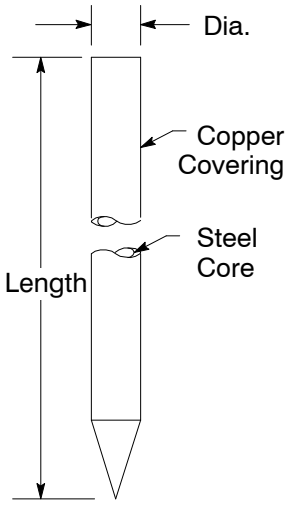

Figure 1
Ground Rod

Table 1 Conventional Ground Rods

Dimensions		Minimum Copper Jacket Thickness (inches)	Code	Application	Mfr.[1]	Catalog Number
Dia.	Length					
5/8”	8’0”	0.010	187013	Normal Grounds for Pad-Mount and Pole Grounds	Nehring	NCC 588
					Galvan	6258
					Calpico	CP588
					Eritech	615880
3/4”	12’0”	0.010	010098	For Substation Grounds or Ground Rods Larger Than 8’ 0” and All Subsurface Primary Enclosures	Eritech	613412
					Galvan	7512
					Nehring	NCC 3410

[1] Ground rods are to be furnished with the length and manufacturer’s identification permanently marked on each rod.

Corrosion Resistant Ground Rods and Ground Rod Clamps

Ground Rod Clamps

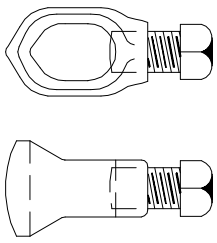

Figure 2
Standard Clamp

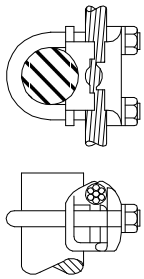

Figure 3
Clamp for Large Wire

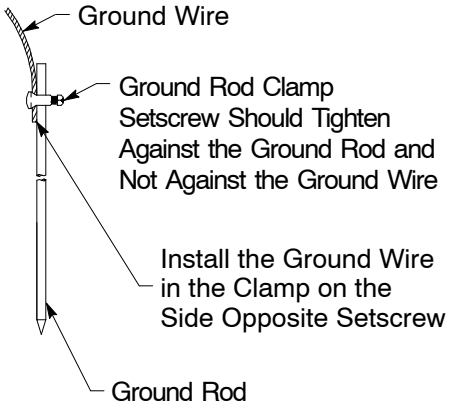

Detail A
Installation of Ground Rod

Table 2 Utility-Grade Ground Rod Clamps [1]

Refer to	Ground Rod Diameter	Ground Wire Size – Copper	Code	Manufacturer	Catalog Number
Figure 2	5/8”	6 to 1/0	187012	Hubbell/Anderson	GC103-01
				Dossert	GN-62
				Eritech	HDC58H
				Eritech	SP58
				Galvan	JAB58HH
Figure 2	5/8” or 3/4”	2/0 to 4/0 With 5/8” Diameter Rod and 6 to 1/0 With 3/4” Diameter Rod	187017	Hubbell/Anderson	GC103-02
				Dossert	GN-75
				Galvan	JAB34HH
	3/4”	4/0 and 250 kcmil	187024	Hubbell/Anderson	GC103-03
				Dossert	GNS-75
Figure 3	5/8” or 3/4”	300 to 500 kcmil	187020	Hubbell/Anderson	GC-111-3D
				Burndy	GAR6434
				Royal	2022(DQ)

[1] The setscrew and clamp are to withstand approximately 35-40 foot-lbs. of torque on the setscrew head without cracking or breaking.

Corrosion Resistant Ground Rods and Ground Rod Clamps

Sectional Ground Rods

Notes

1. Remove the driving head and upper coupling from the ground rod to permit installing a ground rod clamp, (see Table 2 on Page 2), when the ground rod has been driven to its final depth.
2. After driving a second sectional rod, check the rod with a wrench to ensure that the bottom of the second rod is contacting the top of first rod in the threaded coupling. Repeat this check on each additional rod used.

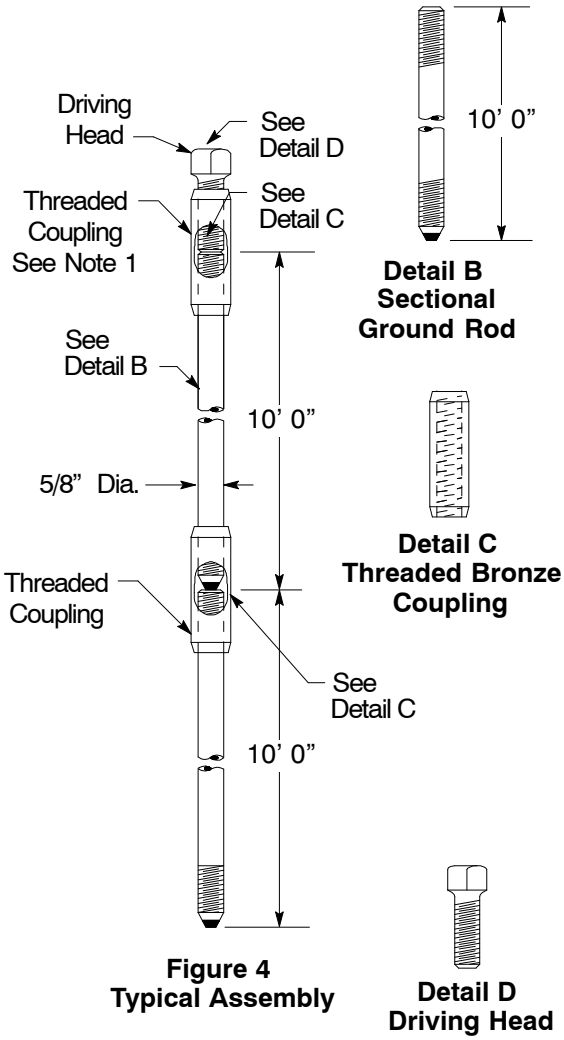

Figure 4 Typical Assembly

Table 3 Sectional-Type Ground Rods

Dimensions		Code	Application	Manufacturer	Catalog Number
Dia.	Length				
5/8"	10'0"	187021	For Deep-Driven Ground Rods (see Document 053241)	Calpico	S5810T
				Eritech	635800
				Galvan	6260S

Table 4 Threaded Bronze Coupling for 5/8" Diameter Sectional-Type Ground Rods

Threaded Coupling Size	Code	Application	Mfr.	Catalog Number
5/8"	187022	For Connecting Ground Rods (see Table 3)	Calpico	C158
			Eritech	CR-58
			Galvan	60–C

Table 5 Driving Head for 5/8" Diameter Sectional-Type Ground Rods

Driving Head Size	Code	Application	Mfr.	Catalog Number
5/8"	187023	For Driving Ground Rods (see Table 3)	Calpico	D358
			Eritech	DS58
			Galvan	60–DS

Revision Notes

Revision 06 has the following changes:

1. Updated Table 2 on Page 2.

Prepared by: ABB1

CONNECTORS FOR INSULATED CABLES UNDERGROUND DISTRIBUTION SYSTEMS

015251

Asset Type:	Electric Distribution	**Function:**	Design and Construction
Issued by:	C. A. Partridge (CAP4)	**Date:**	07-01-14

Rev. #05: This document replaces PG&E Document 015251, Rev. #04. For a description of the changes, see Page 45.

Purpose and Scope

This document provides application and ordering information for cable connectors and terminals for use in underground distribution systems.

General

This document applies to connectors for copper-to-copper, copper-to-aluminum, and aluminum-to-aluminum conductors. The use of aluminum conductors and the necessity of splicing aluminum-to-copper presents some specific problems as follows.

1. All connectors shall meet the requirements of ANSI C119 Class A.
2. Oxide Film

   Unlike copper, aluminum is normally covered with a thin, hard film of invisible aluminum oxide. This film is a good insulator and forms immediately whenever aluminum is exposed to air. Therefore, aluminum connectors must meet the following requirements.

   A. They should exert sufficient pressure on the cable to break through the oxide film.

   B. They should exert approximately equal pressures on all strands.
3. Thermal Expansion and Plastic Flow

   The difference in the thermal expansion of copper and aluminum must be addressed. Aluminum expands and contracts approximately 38% more than copper with the same temperature change. Copper connectors and copper cables expand together as do aluminum connectors and aluminum cables.

   If copper connectors are used on aluminum cables, the aluminum cable expands more than the copper connector. As the temperature rises this causes the aluminum to extrude out of the connector. When the joint cools, the copper connector cannot shrink to fit the reduced diameter of the aluminum conductor. This cycle, repeated over time, results in loose connections and high resistance joints. Therefore, it is important to use connectors that have the same coefficient of expansion as the cable. For example, copper connectors with copper cable and aluminum connectors with aluminum cable.

   Aluminum-to-copper connections must be made with special aluminum connectors. These connectors have a larger mass than standard aluminum connectors, allowing the connector to run cooler than the copper conductor and compensates for the difference in the coefficient of expansion.
4. Corrosion

   A. Electrolytic**:** The third characteristic of aluminum that affects connectors is not peculiar to aluminum alone but is common to all metals. Aluminum in contact with another metal in the presence of moisture will have an electrolytic action.

   This problem exists in the connection of aluminum-to-copper, and the electrolytic action causes corrosion of the anode material (aluminum), leaving the cathodic material (copper) undamaged.

   B. Chemical: Moisture in the absence of air reacts with aluminum forming aluminum hydroxide, which, in a very short time, will seriously corrode the aluminum material.

   It is of extreme importance that aluminum conductors and connectors installed underground be free of moisture. Special care must be used to prevent moisture from entering into underground splices by using an inhibitor, and carefully and correctly taping or sealing splices.

5. General Rules for 6-ton battery presses.
   A. A 6-ton in-line or pistol grip battery-powered press is equivalent to the older mechanical hand tools used for pressing connectors - for example, the Burndy MD6-8 tool.
   B. A 6-ton tool uses the same dies and the same number of compressions that the mechanical hand tool does.
   C. If the connector is stamped with a die designation of HYD, it means a 12-ton tool is necessary with a U die. In the past only 12-ton presses were hydraulic. Examples:
      - A Kearney 303 connector shows “HYD O DIE”. This means a 12-ton tool with a U-O die (with 1 compression) is required. An O die in a 6-ton tool is not sufficient.
      - A Kearney 308 connector shows “HYD D OR D3 DIE”. This means a 12-ton tool with a U-D or U-D3 die (with 1 compression) is required.
   D. If the connector is stamped with a die designation of HAND or MEC, it means a 6-ton or mechanical hand tool can be used with a W die. Example:
      - A Kearney 302 connector shows “HYD B – MEC K”. This means a 6-ton tool with a W-KK die (with 3 compressions) can be used or a 12-ton tool with a U-B die (with 1 compression) can be used. The 6-ton tool is much lighter than the 12-ton tool and is preferred for ergonomics.

Application

1. There are three general types of connectors: solder sweated, bolted, and compression. The advantages, disadvantages, and normal application of these three types of connectors are described in Table 1.

Table 1 UG Connector Comparison

Connector Type	Application	Advantages	Disadvantages
Solder Sweated Split Tinned Copper	For Copper-to-Copper Straight Connections (Page 18)	• Inexpensive • No Special Tools Required • Excellent Electrical Connection	• Must Be Sweated on (increasing time and labor) • Heat Could Damage Some Insulations • Limited to Copper Cables
Bolted	Terminals and Tap Connections Rated Less Than 600 V (Pages 19, 32, 35, 38, and 42 - 43)	• Fast and Easy Install • Wide Range of Sizes • No Special Tools Required • Low Cost	• Copper Split Bolts Limited to Network Systems in Oakland and San Francisco • More Difficult to Seal
Compression	Straight and Tap Connections for Copper and Aluminum Cables (Pages 10 - 17, 21 - 31, 39 - 41, and 44)	• Preferred Electrical Connection • Ease of Installation	• Requires Special Tools and Dies

2. Compression tap connectors, Pages 20 through 25, are the preferred connectors for residential and light commercial installations.

Connectors for Insulated Cables
Underground Distribution Systems

References	Location	Document
Joints for 15 kV Three-Conductor Paper-Insulated Lead-Covered Cable for Use on 12 kV Circuits	UG-2: Splices	022709
Method of Terminating 15 kV Paper Insulated Lead-Covered Cable	UG-2: Terminations	022820
Splice for Leaded to Non-Leaded Cable	UG-2: Splices	022824
Splice for 5 kV and 15 kV Type RO&N Cable Single Conductor Shielded	UG-2: Splices	022827
Method of Terminating 5 kV Single Conductor Non-Leaded Rubber-Type Cable	FRO: UG-1 Terminations	022828A
Method of Terminating 15 kV and 22 kV Single Conductor XLPE-PVC and EPR-PVC Cables (compound filled pothead)	FRO: UG-1 Terminations	022829A
Street Light Cable Splices	UG-2: Splices	022830
Method of Terminating Single Conductor Non-Leaded Varnished Cambric Insulated Cables	FRO: UG-1 Terminations	022831A
Splice for Varnished Cambric Insulated Cable With Flameproof Jacket	UG-2: Splices	022832
Installation of Cable Risers on Wood Poles	OH: Risers/UG-1 Terminations	027742
Current Transformers	ELS	028114
Distribution Transformer Requirements for Vault Installation	FRO: UG-2: Transformers	030362B
Installation of Single-Phase 12 kV Pad-Mounted Transformer Underground Residential Areas	FRO: UG-1 Transformers	032768A
Joints for 15 kV & 25 kV Single Conductor Paper Insulated Lead-Covered Cable for Use on 12 kV & 22 kV Circuits	UG-2: Splices	033585
10 Arrangement 12 kV Switch and Bus Cells	ELS	033701
Distribution Transformer Requirements, Single-Phase and Three-Phase, Overhead-Type	OH: Transformers	034963
Installation of Single-Phase 7,200 V Pad-Mounted Transformer Underground Residential Areas	FRO: Transformers	034978A
Single-Phase, Subsurface, Round Transformers	UG-1: Transformers	035313
Installation of Subsurface, Load-Break, and Dead-Break Primary Junction	UG-1: Switches	035380
Multi-Tap Splice for 600-Volt Insulated Cables	UG-1: Splices	036640
Installation of 200-Amp, Subsurface Sectionalizing Switches	UG-1: Switches	039954
Cables for Underground Distribution	UG-1: Cable	039955
Compression-Type Connectors for Overhead Distribution and Transmission	OH: Conductors	041010
Splices for 15 kV and 22 kV XLP-PVC and EPR-PVC Cable Single-Conductor Shielded	ELS	041583
Termination for 15 and 22 kV XLP-PVC, EPR-PVC, and XLP-CONC-PVC Cables Single Conductor Shielded	ELS	041584
Installation of Live-Front, Low-Profile, Single-Phase, Pad-Mounted Transformers	UG-1: Transformers	042762
Installation of Low Profile Single-Phase 6.9 kV Pad Mounted Transformer Underground Residential Systems	ELS	042765
Installation of Three-Phase, Radial-Style, Pad-Mounted Transformers	UG-1: Transformers	043817
Splices for 15 kV and 22 kV Concentric-Type Cable (PE-CONC, XLP-CONC and XLP-CONC–PVC)	ELS	043901

References (continued)	Location	Document
Method of Terminating 15 KV and 22KV I/O & Smaller Concentric Type Cable – XLP-CONC–PVC & XLP-CONC	ELS	043902
Installation of Loop-Style, Three-Phase, Pad-Mounted Transformers	UG-1: Transformers	045291
Installation of Three-Phase, 600-Amp, Subsurface Sectionalizing Switches	UG-1: Switches	050859
Straight and Tap Splice for 600 Volt Insulated Cable	UG-1: Splices	051034
600-Amp Separable Insulated Connectors	UG-1: Terminations	051071
Premolded 600-Amp Splices for Primary Underground Cables	UG-1: Splices	053732
Pad-Mounted Transformers Installed Indoors	UG-1: Transformers/Greenbook/EMWP	057521
Single-Phase, Dead-Front, and Duplex, Pad-Mounted Transformer Installations	UG-1: Transformers	064308
Fired Wedge Connectors for Primary and Secondary Distribution Lines	OH: Conductors	066194
24 kV 1/0 Cable Joint for Use on 22 kV Circuits, PILC Cables	ELS	306644

Connectors for Insulated Cables
Underground Distribution Systems

Table 2 Connectors – Pictorial Index

Connector	Type		Page	Application	
				Cable	Document [1]
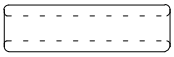	Straight Connectors	Compression	10 to 14	Copper-to-Aluminum	022824 022827 022830 041583 043901 051034
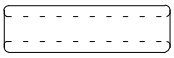			15 & 20	Aluminum-to-Aluminum	
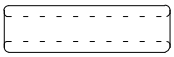			16 to 18	Copper-to-Copper	022709 022824 022827 022830 022832 033585 041583 043901 051034
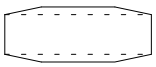		Solder	18	Copper-to-Copper	
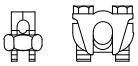	Tap Connectors	Bolted	19	Copper-to-Copper (San Francisco and Oakland Network only)	051034
		Compression	20 to 23	Aluminum-to-Aluminum or Aluminum-to-Copper (for secondary conductors)	
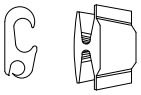			24 to 26	Copper-to-Copper (for secondary conductors)	
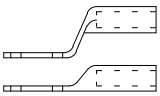	Terminal Connectors		27 to 31	Aluminum-to-Copper (for transformer spade terminals)	032768A 034978A 042762 042765 043817 045291
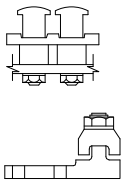		Bolted	32 to 37	Copper (for transformer spade terminals, non-preferred)	028114 030362B 033701
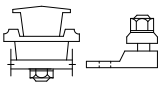			38	Copper (transformer terminals)	
	Ground Terminal	Bolted	19	Copper (equipment tank grounds)	035313 035380 039954 050859

[1] For a description of the application document, see “References” on Page 3.

Table 2 Connectors – Pictorial Index (continued)

Connector	Type		Page	Application	
				Cable	Document [1]
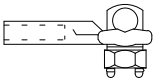	Tap Connectors	Bolted	38	Copper-to-Copper	022828A 022829A 022831A
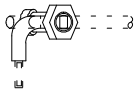			38	Copper-to-Aluminum	042762 042765
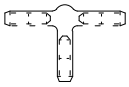		Compression	39	Aluminum-to-Aluminum Copper-to-Aluminum Copper-to-Copper	041583 043901
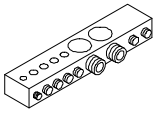	Slip-Fit Connectors	Bolted	42	Aluminum or Copper	064308
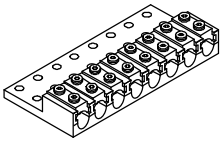	Multiple Transformer Terminal	Bolted	43	Aluminum or Copper	043817 045291
	Pin Terminals	Compression	44 – 45	Aluminum or Copper	027742 036640 041584 043902
Tool and Die Information		Compression	5 7-8	Copper Cables Aluminum Cables	–

[1] For a description of the application document, see “References” on Page 3.

Tools and Dies for Compression Connectors

Table 3 Installation Information for Copper Cables

Tool Index No.	Hypress & Circular or Indentor Die [1]								
	Connector Nominal OD	Burndy Index No.	MD-6	Y35: Alcoa 12A	Homac UT 15/W [2] 15 Cap Adaptor	Y46	Y48B		
			Circular Die	Circular Die	Circular Die [3]	Circular Die [4]	Circular Die	Nest Die	Indentor
4C	0.34	8	W4CRT	U4CRT	U4CRT	U4CRT	C4CR	–	–
2C	0.42	10	W2CRT	U2CRT	U2CRT	U2CRT	C2CR	–	–
2CS	0.50	163	W163	U163	–	U163	–	–	–
1C	0.46	11	W1CRT	U1CRT	U1CRT	U1CRT	C1CR	–	–
1/0 C	0.51	12	W25RT	U25RT	U25RT	U25RT	C25R	–	–
2/0 C	0.56	13	W26RT	U26RT	U26RT	U26RT	C26R	–	–
3/0 C	0.62	14	W27RT	U27RT	U27RT	U27RT	C27R	–	–
4/0 C	0.69	15	W28RT	U28RT	U28RT	U28RT	C28R	C28D	Y48PR
250 C	0.75	16	–	U29RT	U29RT	U29RT	C29R	C29D	
300 C	0.81	17	–	U30RT	U30RT	U30RT	C30R	C30D	
350 C	0.88	18	–	U31RT	U31RT	U31RT	C31R	C31D	
400 C	0.95	19	–	U32RT	U32RT	U32RT	C32R	C32D	
500 C	1.10	20	–	U34RT	U34RT	U34RT	C34R	C34D	
600 C	1.19	22	–	U36RT	U36RT	U36RT	C36R	C36D	
750 C	1.30	24	–	U39RT	112H	P39RT	C39R	C39D	
1000 C	1.50	27	–	–	125H	P44RT	C44R	C44D	
1500 C	1.84	31	–	–	–	P46RT	C46R	C46D	

1 For reference purposes, all available dies are shown. It is not intended that all dies indicated be provided with every tool.
2 T & B equivalent: TBM15, 15500 Adapter.
3 Use UT15 tool with 15 CAP adapter on Burndy dies for #4 through 600 kcmil only.
4 Use PUADP-1 adaptor die in Y46 to utilize all Y35 dies (i.e., U-RT or U-ART).

Tools and Dies for Compression Connectors (continued)

Table 4 Installation Information for Aluminum Cables

Tool Index No.	Hypress & Circular or Indentor Die [1]									
	Conn. Nom. OD	Burndy Index No.	MD-6	Burndy Y35: Alcoa 12A	Homac UT 15/W 15 Cap Adaptor [2]	Y46	Y48B			Burndy Y60
			Circular Die	Circular Die	Circular Die [3]	Circular Die [4]	Circular Die	Nest Die	Indentor	Circular Die
4A	0.43	375	W4CART	U4CABT	U4CABT	U4CABT	C4CAB	–	–	–
2A	0.53	348	W2CART	U2CABT	U2CABT	U2CABT	C2CAB	–	–	–
1A	0.54	471	W1CART	U1CART	U1CABT	U1CART	C1CAR	–	–	–
1/0 A	0.60	296		U25ART	U25ART	U25ART	C25AR	–	–	–
1/0AS	0.65	BG	W-BG [5]	U-BG	U-BG	U-BG	–	–	–	–
2/0 A	0.67	297	W26ART	U26ART	U26ART	U26ART	C26AR	–	–	–
3/0 A	0.76	467	W27ART	U27ART	U27ART	U27ART	C27AR	–	–	–
4/0 A	0.85	298	W28ART	U28ART	U28ART	U28ART	C28AR	–	–	–
4/0 AS	0.90	249	W249	U249	U249	U249	–	–	–	–
250 A	0.92	324	–	U29ART	U29ART	U29ART	C29AR		–	–
300 A	1.01	470	–	U30ART	U30ART	U30ART	C30AR	C34D	Y48PR1	–
350 A	1.11	299	–	U31ART	U31ART	U31ART	C31AR	C35D		–
400 A	1.19	472	–	U32ART	U32ART	U32ART	C32AR			–
500 A	1.32	300	–	U34ART	U34ART[6]	U34ART	C34AR	C39D		–
600 A	1.44	473	–	U36ART	140H	U36ART	C36AR	C44D		–
700/ 750 A	1.60	301	–	U39ART	140H	P39ART	C39AR	C45D		–
800 A	1.65	474	–	–	140H	P40ART	C40AR			–
1000 A	1.84	302	–	–	150H /161R [7]	P44ART	C44AR	C46D		–
1250 A	2.25	478	–	–	–	–	–	–	–	L44ART
1500 A	2.26	478	–	–	–	–	–	–	–	L46ART
1750 A	2.46	587	–	–	–	–	–	–	–	L47ART
2000 A	2.60	479	–	–	–	–	–	–	–	L48ART

1 For reference purposes, all available dies are shown. It is not intended that all dies indicated be provided with every tool.
2 T & B equivalent: TBM15, 15500 Adapter.
3 Use UT15 tool with 15 CAP adapter on Burndy dies for #4 through 500 kcmil only.
4 Use PUADP-1 adaptor die in Y46 to utilize all Y35 dies (i.e., U-RT or U-ART).
5 The OH-25 handtool may be used on insulated service sleeves only.
6 Homac equivalent of this die is 106A.
7 150H no longer available, either die is acceptable.

Applications of Straight Connectors Compression-Type (copper-to-aluminum)

Note

1. Indent dies should be used on all primary splices except for #2 and #4 copper and #2 aluminum. In these small sizes, the indent-type dies seriously distort the connector. If only crimp-type dies are available, they may be used on the primary, but the connector must be filed smooth. On circuits of 600 V or lower, indent- or crimp-type dies work equally well. Indent normally requires fewer operations.
2. Tool index numbers may be applied to in-line cable-to-cable limiters.
3. For number of crimps or indents, see the manufacturer's instructions on the package, or where the information is not available, make as many non-overlapping crimps as possible without going over the outer end.
4. Pages 9 through 17 and 21 through 25 show non-tension compression-type connectors used to connect copper conductors to aluminum conductors. These connectors may also be used to connect aluminum-to-aluminum conductors.
5. Table 5 on Page 10 and Table 6 on Page 11 show compression splice connectors which accommodate specific conductor sizes. Table 9 on Page 14 shows connectors which can be drilled to fit any size within a specified range. It may be necessary to occasionally use the connectors shown in Table 9 on Page 14 where connectors in Table 5 on Page 10 and Table 7 on Page 12 are not readily available.
6. Use a clean wire brush to remove oxides from the conductors.
7. After the connector has been pressed on, insulating of pressed connections is accomplished in the same manner as shown in Document 051034. Special attention must be given to the following:
   A. Both ends of the aluminum connector should contain oxide inhibitor. (Connectors shown in Table 5 on Page 10 and Table 6 on Page 11 are prefilled with inhibitor. Connectors shown in Table 9 on Page 14 must be filled with inhibitor after drilling.) See Document 028852 for approved oxide inhibitors.
   B. After the connector has been pressed on the cable, excess oxide inhibitor must be wiped from the connector and conductor surface.
   C. Use special care to ensure a moisture-proof splice.
8. Solder-type connectors must not be used on aluminum conductors.
9. If several insulated aluminum conductors are to be connected to one insulated copper conductor, each aluminum conductor must first be spliced to a short length of copper conductor so that the multiple connection can be made with all copper conductors. This multiple connection may be a tee tap (or several tee taps) as shown in Document 051034.
10. Special care must be used to prevent moisture from entering through the copper strands when connecting a bare stranded copper conductor to an insulated aluminum conductor (e.g., copper-to-aluminum neutral connection). See Document 051034 for the method of making these connections.

Straight Connectors Compression-Type (predrilled) Copper-to-Aluminum

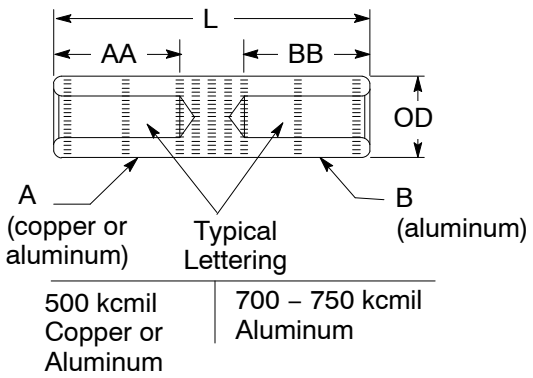

Figure 1

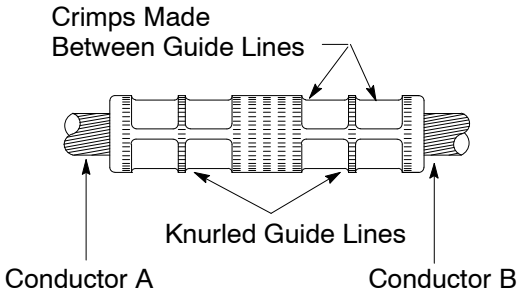

Figure 2
View After Installation
(for Figure 1)
Material: Aluminum
Finish: Unplated

Table 5 Compression-Type Connectors – Predrilled 4/0 – 2/0 (Figure 1)

Conductor Size – AWG or kcmil		Dimensions (inches)				Manufacturer and Catalog Numbers			Tool Index No. [3]	Code
A [1] (Cu or Al)	B (Al)	AA	BB	L [2]	OD	Burndy	Richards	Homac		
4	2	1.03	1.03	2.75	0.65	See Document 028852			1/0AS	305558 [4]
2	2									305559 [4]
2	1					YR1CA2CCAG1	ALCR 8-7	SAC1R2		305569
2	1/0					See Document 028852				305562 [4]
2	2/0	1.56	1.56	4.00	0.91	YR26A2CCAG1	ALCR 10-7	SAC2/0 R2	4/0AS	305571
2/0	2/0					YS26UG2	ALC 10	SAC2/0		305581
2/0	3/0					YR27A26CAG1	ALCR 11-10	SAC3/0 R2/0		305582
2/0	4/0					YR28A26CAG1	ALCR 12-10	SAC4/0 R2/0		305585

1 Maximum copper conductor size.
2 These dimensions may vary slightly among the various suppliers.
3 See Table 3 on Page 7 and Table 4 on Page 8 for installation information.
4 These connectors are overhead-type insulated service sleeves. The insulation on these sleeves does not provide an adequate seal for underground application. These sleeves must be insulated and sealed as shown in Document 051034 as if they were bare.

Straight Connectors Compression-Type (predrilled) Copper-to-Aluminum (continued)

Table 6 Compression-Type Connectors – Predrilled 250 – 1,000

Conductor Size – AWG or kcmil		Dimensions (inches)				Manufacturer and Catalog Numbers			Tool Index No. [3]	Code
A [1] (Cu or Al)	B (Al)	AA	BB	L [2]	OD	Burndy	Richards	Homac		
250	250	1.86	1.86	4.62	1.12	YS29UG1	ALC 13	SACB250	350A	305586
250	300					YR30A29CAG1	ALCR 14-13	SAC300R250		305602
250	350					YR31A29CA	ALCR 15-13	SAC350R250		305127
250	400	2.55	2.55	6.19	1.62	YR32A29CAG1	ALCR 16–13	SACL400R250	700/ 750A	305604
500/600	500					YS34APGE	ALC 18	SACL500		305108
500	600					YR36A34CA	ALCR 20-18	SAC600R500		305129
500	700, 750					YR39A34CA	ALCR 25-18	SAC750R500		305107
500	800	2.91	2.91	7.16	1.84	YR40A34CAG1	ALCR 24-18	SACF800R500	1000A	305606
750	1,000					YR44AG3	ALCR 28-23	SAC1000R750		305023
4	2	1.50	1.50	3.57	0.65	YR2CA4CCATG1	OATCR7-5	SAC2R4	1/0AS	305607
2	2					YS2CUTG1	OATC 7	SAC2		305608
2	1/0					YR25A2CCATG3	OATCR9-7	SAC1/0R2		305609
2/0	4/0	2.08	2.08	4.82	0.91	YR28A26CATG2	OATC 12-10	SAC4/0R2/0	4/0AS	305610
250	350	2.61	2.96	6.66	1.12	YR31A29CAT	OATC15-13	SAC350R250	350A	305143
500/600	700, 750	3.75	4.19	9.41	1.62	YR39A34CAT	OATC23-18	SAC750R500	700/ 750A	305403
750	1,000	4.10	4.10	9.09	1.84	YR44ATG1	OATC28-13	SAC1000R750	1000A	305611

1 Maximum copper conductor size.
2 These dimensions may vary slightly among the various suppliers.
3 See Table 4 on Page 8 for installation information.

Note

1. Connectors shall be pre-filled with an approved oxide inhibitor.
2. All connectors shall have an oil stop.

Straight Connectors Compression-Type (multi-range) Copper-to-Aluminum

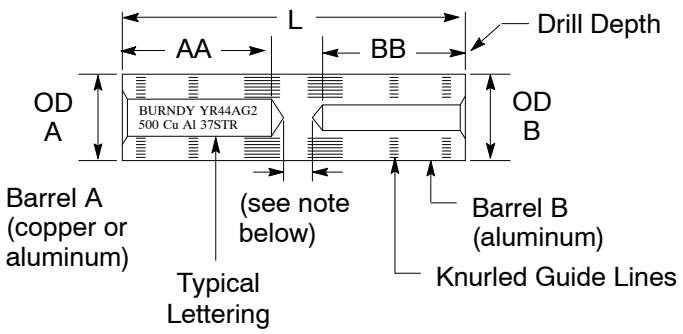

Figure 3

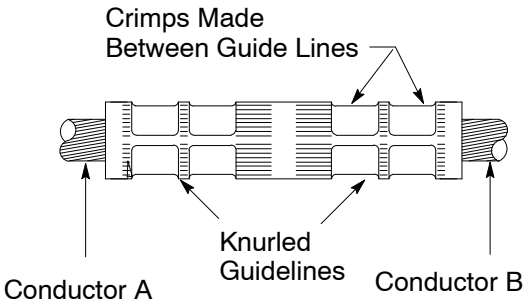

Figure 4
View After Installation

Table 7 Dimensional Information for Compression-Type Connectors – to be Drilled in the Field (Figure 3)

Conductor Size AWG or kcmil			Refer to	Dimensions (inches)					Tool [1] Index No.	Code
Barrel (A) (Cu or Al) Cond. OD	Barrel B (Al)			AA	BB	L	OD			
	Min. Cond. OD	Max. Cond. OD					A	B		
2-7 Str. (0.292”)	6 Sol. (0.162”)	1/0 (0.372”)	Figure 3	1-13/32	1-13/32	3-5/32	39/64	39/64	1/0A	305157[2]
3/0-19 Str. (0.470”)	4 Sol. (0.204”)	250 (0.575”)		1-7/8	1-7/8	4-7/32	59/64	59/64	250A	305159
2/0-19 Str. (0.419”)	6 Sol. (0.162”)	500 (0.813”)			2-3/4	5-5/64	1-21/64	1-21/64	500A	305160
250-37 Str. (0.575”)	1/0 (0.373”)	750 (0.998”)		2-2/64	3-1/32	6-15/64	1-39/64	1-39/64	750A	305788
500-37 Str. (0.813”)	300 (0.629”)	1,000 (1.152”)		3-3/8	3-3/8	7-21/32	1-27/32	1-27/32	1000A	305789
600-37 Str. (0.893”)	400 (0.728”)	1,000 (1.152”)								305161
750-61 Str. (0.998”)	500 (0.813”)	1,250 (1.289”)		4	4	9	2-17/64	2-17/64	1250A	305163

1 See Table 4 on Page 8 for installation information.
2 Overhead service drop connectors shown in Document 028852 may be substituted for this size. The proper compression tool shown in Document 028852 must be used with service drop connectors.

Straight Connectors Compression-Type (multi-range) Copper-to-Aluminum (continued)

Table 8 Ordering Information for Compression-Type Connectors (to be drilled in the field)

Conductor Size AWG or kcmil			Manufacturer and Catalog Number		Code
Barrel (A) (Cu or Al) Conductor OD	Barrel B (Al)		Burndy	Homac	
	Min. Cond. OD	Max. Cond. OD			
2-7 Str. (0.292”)	6 Sol. (0.162”)	1/0 (0.372”)	YR25AG1	2051-1	305157 [1]
3/0-19 Str. (0.470”)	4 Sol. (0.204”)	250 (0.575”)	YR29AG1	2051-2	305159
2/0-19 Str. (0.419”)	6 Sol. (0.162”)	500 (0.813”)	YR34AG1	2051-3	305160
250-37 Str. (0.575”)	1/0 (0.373”)	750 (0.998”)	YR39AG1	2051-4	305788
500-37 Str. (0.813”)	300 (0.629”)	1,000 (1.152”)	YR44AG2	2051-5	305789
600-37 Str. (0.893”)	400 (0.728”)	1,000 (1.152”)	YR44AG1	2051-6	305161
750-61 Str. (0.998”)	500 (0.813”)	1,250 (1.289”)	YR45AG1	2051-7	305163

[1] Overhead service drop connectors shown in Document 028852 may be substituted for this size. The proper compression tool shown in Document 028852 must be used with service drop connectors.

Straight Connectors Compression-Type (multi-range) Copper-to-Aluminum (continued)

Table 9 Cable and Drill Information

Cable (aluminum) AWG or kcmil		Drill Information	
Size	Diameter (inches)	Diameter (inches)	Drill Size
6 Sol.	0.162	0.172	11/64”
6 Str.	0.184	0.194	10”
4 Sol.	0.204	0.250	1/4”
4 Str.	0.232	0.250	1/4”
3 Str.	0.260	0.290	L
2 Str.	0.292	0.312	5/16”
1 Str.	0.332	0.359	23/64”
1/0 Str.	0.373	0.391	25/64”
2/0 Str.	0.419	0.438	7/16”
3/0 Str.	0.470	0.500	1/2”
4/0 Str.	0.528	0.562	9/16”
250	0.575	0.594	19/32”
300	0.629	0.656	21/32”
350	0.681	0.719	23/32”
400	0.728	0.766	49/64”
500	0.813	0.859	55/64”
600	0.893	0.922	59/64”
750	0.998	1.062	1-1/16”
1,000	1.152	1.172	1-11/64”
1,200	1.263	1.312	1-5/16”
1,250	1.289	1.312	1-5/16”

Material

Aluminum, coated with an oxide inhibitor

Notes

1. Barrel “A” is predrilled to accommodate only one conductor size as shown in Table 7 on Page 12. These sizes are standard PG&E sizes for 6,000 V insulated copper cable. Barrel “B” is predrilled to minimum conductor OD as shown in Table 7 on Page 12. The hole may be enlarged in the field to accommodate other cable sizes within the range shown in Table 7 on Page 12. Enlarge holes with a drill press or other similar precision tool and chamfer hole ends.
2. Allow 0.1” minimum space between drill points.
3. After drilling, both barrels shall be filled 1/4 to 1/2 full with approved oxide inhibitor. Oxide inhibitor is not included in the connector catalog number and must be ordered separately. Burndy Co. Penetrox A, 1-pint container, Code 495214.

   Example: Connect 400 kcmil aluminum to 250 kcmil copper conductor.

   From Table 7 on Page 12, the required connector for 250 kcmil copper (Barrel “A”) is Catalog No. YR39AG1. Barrel “B” is to be enlarged to 0.766” diameter using a 49/64” drill. The drill size is from Table 9. The depth of the barrel is 3.03” (Dimension BB, Figure 3 on Page 12).

   Fill both barrels 1/4 to 1/2 full of oxide inhibitor. Insert the conductors in the appropriate barrels of the connector and press them on using a Y48B Hypress and C32AR dies on copper end, and C39AR dies on the aluminum end. From this point on, the splice can be treated in the same manner as an all copper conductor splice as described in Note 7 on Page 9.

   If the connection is bare copper to insulated aluminum, follow the instructions in Note 10 on Page 9.

Straight Connectors Compression-Type (aluminum-to-aluminum)

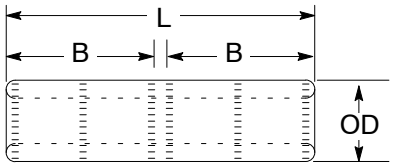

Figure 5

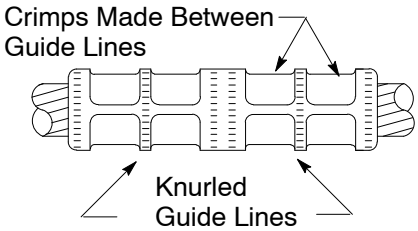

Figure 6
View After Installation

Table 10 Dimensions and Ordering Information – Aluminum-to-Aluminum (Figure 5)

Conductor Size AWG or kcmil	Refer to	Dimensions (inches)			Manufacturer and Catalog Number			Tool [1] Index No.	Code
		L	B	OD	Burndy	Richards	Homac		
2	Figure 5 Above	2.75	1.18	0.65	See Document 028852			1/0AS	305559 [2]
1/0		2.75	1.18	0.65				1/0AS	305563 [2]
4/0		3.30[3]	1.54[3]	0.91	YS28AG9	ALC12	AC4/0	4/0AS	305616
350		6.97	3.38	1.12	YS31AY	ALC15	AC350	350A	305148
700/750		8.28	4.00	1.62	YS39AY	ALC23	AC750	700/ 750A	305150
1,000		10.81	5.25	1.84	YS44AY	ALC28	AC1000	1000A	305618

1 See Table 4 on Page 8 for installation information.
2 These connectors are overhead-type insulated service sleeves (see Document 028852). The insulation on these sleeves will not provide an adequate seal for underground application. These sleeves must be insulated and sealed as shown in Document 051034 as if they were bare.
3 For Burndy & Richards, Dimension L = 2.34”, B = 1.09”.

Material

Aluminum

Finish

Unplated

Notes

1. Connectors shall be pre-filled with an oxide inhibitor.
2. Connectors shown in Table 10 above are not suitable substitutes for the compression connectors supplied in the 3M pre-molded splice kits. The connector ODs supplied in the splice kits are larger than normal to provide a heat sink and facilitate sliding the pre-molded housing back and forth.

Straight Connectors Compression-Type (copper-to-copper)

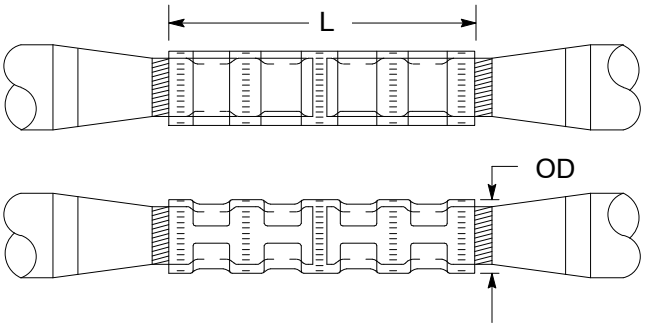

Figure 7

Table 11 Straight Connectors – Compression-Type – Copper-to-Copper (Figure 7)

Conductor Size AWG or kcmil	Dimensions (inches)		Manufacturer and Catalog Number				Tool Index No. [1]	Code
	Length (L)	OD	Burndy	Richards	Homac	Dossert		
4	2.38	0.34	YSP4CT	OCC5	PC-4	DPCP 4	4C	305164 [3]
2	3.18	0.29	YS2CT [2]	OTEC7	–	–	X(Nicopress)	305236
2	2.62	0.42	YSP2CT	OCC7	PC-2	DPCP 6	2C [4]	305165 [3]
2/0	2.21	0.56	YS26T	CC10	TC-2/0	DPC 13-T	2/0C	305283
2/0	3.13	0.56	YSP26T	OCC10	PC-2/0	DPCP 13	2/0C	305167 [3]
4/0	2.39	0.69	YS28T	CC12	C-4/0	DPC 21-T	4/0C	305285
250	3.38	0.75	YSP29T	OCC13	PC-250	DPCP 25	250C	305429 [3]
250	3.38	0.75	YS29	CC13	C-250	DPC 25	250C	305202
500	4.62	1.06	YSP34T	OCC18	PC-500	DPCP 50	500C	305428 [3]
500	4.63	1.06	YS34	CC18	C-500	DPC 50	500C	305203
750	4.23	1.3	Y39T	CC23	TC-750	DPC 75-T	750C	305488
1,000	6.13	1.50	YS44	CC28	C-1000	DPC 100	1000C	305480
1,500	6.5	1.84	YS46	CC30	C-1500	DPC 150	1500C	305511

1 See Table 3 on Page 7 for installation instructions.
2 Nicopress part number for #4: 1–209/7M, for #2: 1–258/7X.
3 These connectors have oil stops. These are more costly connectors and should only be used for splicing P&L cable to rubber or polyethylene insulated cables.
4 For #2 Solid, use Nicopress “M” Groove or Burndy 162 die index.

Straight Connectors Compression-Type (copper-to-copper)(continued)

Material and Finish

"Specifications for Straight Compression-Type Connectors for Insulated Copper Conductors."

Note

1. Connectors shown in Figure 7 on Page 16 are to be used to connect cables of up to 35 kV rating or lower, and can be used on bare cables where such cables will not be subjected to tension.
2. These connectors have oil stops. These more costly connectors should only be used for splicing P&L cable-to-rubber or polyethylene insulated cables.
3. Smaller connectors appear as in Figure 7 on Page 16, except only one indent is required for each cable socket.
4. When connecting conductors of different size, use the connector for the larger size and shim up the smaller size with sheet copper (Code 156172) to form tight fit.
5. An indentor-type compression die should not be used on #4 or #2 AWG size connectors because it excessively distorts the connector. Use circular crimp dies as shown in Table 3 on Page 7.
6. Round the sector cable with a rounder tool.

Straight Connectors Solder-Type (copper-to-copper)

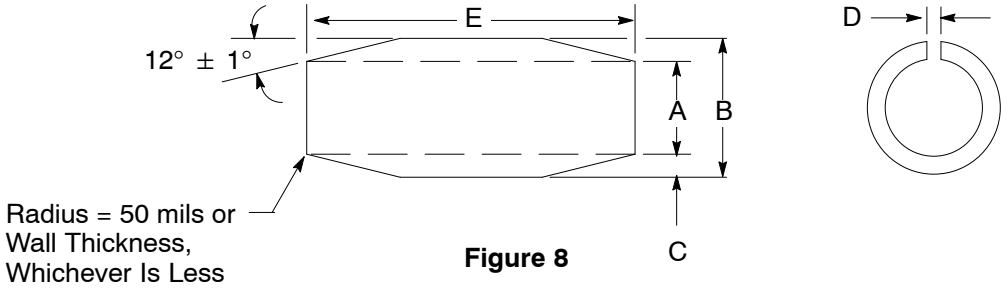

Figure 8

Table 12 Straight Connectors – Split Tinned-Type – Copper-to-Copper, All Voltages (Figure 8)

Cable Size AWG or Kcmil (round or compact sector)	Nominal Dimensions – Inches					Standard Package	Burndy Part Number	Richards	Code
	A ID	B OD	C (wall thickness)	D (slot width)	E (length)				
8	5/32	3/16	1/32	1/32	1-1/2	200	SS8C8C	RSS2	305041
6	3/16	1/4	1/32	1/32	1-1/2	200	SS6C6C	RSS3	305042
4	7/32	5/16	1/32	1/32	2	100	SS4C4C	RSS5	305043
2	9/32	3/8	1/32	1/32	2	100	SS2C2C	RSS7	305044
1/0	3/8	1/2	1/16	1/16	2	100	SS2525	RSS9	305045
2/0	13/32	9/16	1/16	1/16	2	100	SS2626	RSS10	305046
3/0	15/32	5/8	1/16	1/16	2	100	SS2727	RSS11	305059
4/0	17/32	23/32	1/16	1/16	2-1/2	50	SS2828	RSS12	305047
250	9/16	25/32	3/32	1/8	2-1/2	50	SS2929	RSS13	305048
350	11/16	29/32	3/32	1/8	2-1/2	20	SS3131	RSS15	305324
400	23/32	31/32	1/8	1/8	3	10	SS3232	RSS16	305049
500	13/16	1-3/32	1/8	1/8	3	10	SS3434	RSS18	305050
600	29/32	1-3/16	1/8	5/32	3-1/2	10	SS3636	RSS20	305051
750	1-1/32	1-11/32	5/32	5/32	3-1/2	10	SS3939	RSS23	305052
1,000	1-5/32	1-9/16	3/16	7/32	4-1/2	1	SS4444	RSS28	305053
1,500	1-7/16	1-29/32	7/32	9/32	5	1	SS4646	RSS30	305054
2,000	1-21/32	2-7/32	1/4	9/32	6	1	SS4848	RSS32	305055

Material and Finish

Edison Electric Institute Specification TD 160 “Specifications for Solder-Sweated Split Tinned Copper Connectors.”

Note

1. When splicing cables of different sizes, cut a sector from one half of the connector.
2. When tinning and sweating the connector onto the conductors:
   A. Protect the insulation.
   B. Wipe smooth, removing all sharp solder points.
3. Round the sector cable with a rounder tool.
4. The connectors described on this page can be used on bare cables where such cables will not be subjected to tension.

Application

Normal use should be limited to tap splices 5,000 V and above on copper cable in sizes larger than #2 AWG.

Bolted Connectors for Underground Network Systems

A. These connectors are for making copper-to-copper current carrying connections on underground network secondary systems in San Francisco and Oakland.

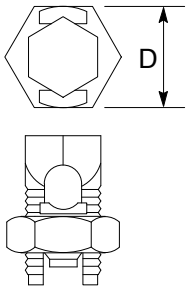

Figure 9

Table 13 Split Bolt Connectors For Copper-to-Copper Connections (Figure 9)

Conductor Size AWG or kcmil		Nut Size D	Torque Inch-lbs. (ft./ lbs)	Code	Manufacturer and Catalog Number			
Solid	Stranded				Blackburn	Burndy	Penn-Union	Homac
10	10	7/16”	80 (7)	305026	9H	KS90	S-10-S	–
8	8	1/2”	80 (7)	305027	8H	KS15	S-8-S	E-8
6	8	11/16”	–	305028	6H	KS17	S-6-PGE	E-6
4	6	3/4”	–	305029	4H	KS20	S-4-PGE	E-4
2	4	7/8”	–	305030	2H	KS22	S-3-PGE	E-2
1	2	7/8”	–	305031	1H	KS23	S-2-S	–
2/0	1/0	1”	–	305032	10H	KS25	S-1/0-S	E-1/0
3/0	2/0	1-1/18”	385 (32)	305033	20H	KS26	S-2/0-S	E-2/0
4/0	3/0, 4/0, 250	1-5/16”	650 (54)	305034	40H	KS29	S-250-PGE	E-250

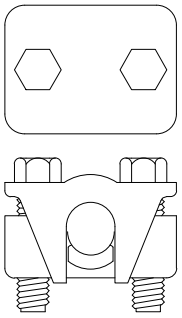

Figure 10

Table 14 Two Bolt Connectors for Copper-to-Copper Connections (Figure 10)

Conductor Size AWG or kcmil		Code	Manufacturer and Catalog Number					
Main Run	Min. Tap		Anderson	Blackburn	Burndy	Penn-Union	Dossert	Homac
4/0	6	305431	K-3	2B40	KVS28	VT-2	DSU21	–
250 to 350	1/0	305432	K-4	2B350	KVS31	VT-3	DSU35	TBC 350
400 to 500	2/0	305433	K-5	2B500	KVS34	VT-4	DSU50	TBC 500
600 to 750	4/0	305434	K-6	2B800	KVS40	VT-5	DSU80	TBC 800
800 to 1,000	4/0	305435	K-7	2B1000	KVS44	VT-6	DSU100	TBC 1,800

Material and Finish

Copper Alloy

Note

1. Connectors shown in Table 13 and Table 14 are for use on unshielded insulated cables rated 600 V or lower.
2. Connectors shown in Table 13 may also be used to connect unshielded streetlighting cable.
3. If necessary, double back on small size tap wires to obtain a tight fit.
4. The connectors described on this page can be used on bare cables where such cables will not be subjected to tension.
5. These connectors shall not be used in overhead applications.

Ground Terminal

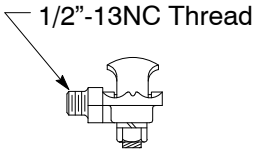

Figure 11

Table 15 Ground Terminal (Figure 11)

Conductor Size – AWG	Manufacturer and Catalog Number				Code
	Anderson Elect.	Fargo	Burndy	Dossert	
#10 Sol. - #1 Str.	GTCS-21	GC207	EQC632C-1	TGC 8-50	303214

Tap Connectors Compression-Type (#6 through 400 kcmil aluminum-to-aluminum or aluminum-to-copper)

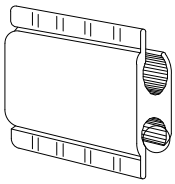

Figure 12
H-Type Connector

Table 16 Tap Connectors – Compression-Type – Aluminum-to-Aluminum or Aluminum-to-Copper (Figure 12)

Conductor Size AWG or kcmil		Tap																
		#6 Sol.	#4 Sol.	#4 Str.	#2 Sol.	#1 Sol.	#2 Str.	1/0 Sol.	1/0 Str.	2/0 Str.	3/0 Str.	4/0 Str.	250	266.8 Str.	336.4 Str.	350	397.5	400
Run	#6 Sol.	Code 305507				–			–		–		–					
	#4 Sol.																	
	#4 Str.																	
	#2 Sol.																	
	#1 Sol.	Code 305509																
	#2 Str.																	
	1/0 Sol.																	
	1/0 Str.									Code 305519								
	2/0 Str.	Code 305510																
	3/0 Str.										Code 305831							
	4/0 Str.	Code 305520							Code 305830									
	250	–									Code 305833		Code 305834					
	266.8 Str.																	
	336.4 Str.	Code 305832																
	350																	
	397.5																	
	400																	

Table 17 Aluminum Compression Connectors for Secondary Connections to Streetlight Conductors

Conductor Size (AWG)		Tap	
		#10 Sol.	#8 Sol.
Run	#2 Str.	Code 305842	
	1/0 Str.		
	2/0 Str.		
	3/0 Str.	Code 305843	
	4/0 Str.		

Material

Aluminum Alloy

Application

Straight splice or tap, residential and light commercial.

Tap Connectors Compression-Type (#6 through 400 kcmil aluminum-to-aluminum or aluminum-to-copper)(continued)

Table 18 Aluminum H-Type Compression Connectors

Tool and Die Data			Code	Remarks
Number of Compressions				
Die	Hydraulic Tools	Mechanical Tools		
	Burndy Y35, Y46 [1], Alcoa 12A, Homac UT-15 or T&B TBM15 [2]	Burndy MD-6		
O	2	4	305507	Same as Tap Connectors Shown in Document 041010
		5	305509	
D	2	5	305510	
			305519	
			305520	
	3	7	305830	
			305831	
N	2	–	305832	
			305833	
	3		305834	
Connectors for Connections to Street Light Conductors on Secondary Underground				
O	2	4	305842	Same as Tap Connectors Shown in Document 041010
D	–	4	305843	

[1] With Burndy Y-46 tool, use adapter PUADP-1 for Y-35 style dies.
[2] Use Homac UT-15 tool with 15 CAP adapter or T&B TBM15 tool with 15500 adapter on Burndy dies for #4 through 1/0 only.

Note

Do not use the N Die with UT-15 or TBM15 tools.

Tap Connectors Compression-Type for Secondary Conductors (2/0 through 1033 kcmil aluminum-to-aluminum or aluminum-to-copper)

Table 19 Tap Connectors – Compression-Type for Secondary Conductors

Conductor Size AWG or kcmil		Tap																								
		2/0	3/0	4/0	250	266.8	300	336.4	350	397.5	400	450	477	500	550	556.5	600	636	700	715.5	750	795	800	874.5	900	1000	1033.5
Run	336.4	See Table 16 Page 20										Code 305522						–								
	350																									
	397.5																									
	400																									
	450	Code 305521								Code 305522																
	477																									
	500																									
	550																									
	556.5																									
	600																									
	636	Code 305524								Code 305526								Code 305537								
	700																									
	715.5																									
	750																									
	795																									
	800																									
	874.5																									
	900																									
	1,000	Code 305804			Code 305875					Code 305976											Code 305538					
	1,033.5																									

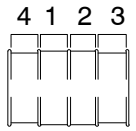

Marking on Connector for Compression with R Die

Figure 13

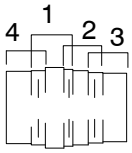

Position of Z Die on R Die Compression Markings

Figure 14
Installation Instructions for Z Die

Table 20 Ordering Data for Z Die for Use in UT-15 Hydraulic Tool

Die Designation	Code	Manufacturer and Catalog Number
Z	216248	Homac 15 CZ [1]

[1] T&B equivalent 15620.

Tap Connectors Compression-Type for Secondary Conductors (2/0 through 1033 kcmil aluminum-to-aluminum or aluminum-to-copper)(continued)

Material

Aluminum Alloy

Application

Straight splice or tap, residential and light commercial.

Notes

1. Two dies can be used for compressing the aluminum H-Type connectors listed in Table 18 on Page 21. These are the R and Z dies. Some manufacturers refer to both dies while others designate only the R die on their connectors.
2. When using the Z die on connectors which require three compressions, make the first compression in the center. The Z die will overlap the crimp location markings on the connector since these markings are based on the narrower R die. Then make a compression on each side of the center compression, keeping the die even with the outside edge of the connector and overlapping the previously made center compression.

   When using the Z die on connectors which require four compressions, make the first two compressions in the center portion of the connector, overlapping the centerline of the connector on each compression as shown in Figure 14 on Page 22. Then complete a compression on each end, overlapping the previously completed center compression sufficiently to maintain the outer edge of the die flush with the end of the conductor.

Tap Connectors Compression-Type for Secondary Conductors (copper-to-copper)

Figure 15
Figure-6 Type

Table 21 Figure-6 Type Copper Connectors (Figure 15)

Conductor Size AWG or kcmil		Tap										
		#6 Sol.	#4 Sol.	#4 Str.	#2 Sol.	#1 Sol.	#2 Str.	1/0 Sol.	1/0 Str.	2/0 Str.	3/0 Str.	4/0 Str.
Run	#6 Sol.	Code 305844						–			Code 012086	
	#4 Sol.											
	#4 Str.											
	#2 Sol.											
	#1 Sol.											
	#2 Str.											
	1/0 Sol.	–	Code 305845									
	1/0 Str.											
	2/0 Str.											
	3/0 Str.											
	4/0 Str.											
	250										–	

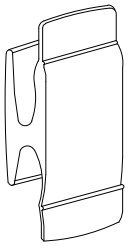

Figure 16
Blackburn, Kearney, Homac, Penn-Union H-Tap Type

Table 22 Blackburn, Homac, Kearney and Penn-Union H-Tap Copper Connectors (Figure 16)

Conductor Size AWG or kcmil		Tap										
		#6 Sol.	#4 Sol.	#4 Str.	#2 Sol.	#1 Sol.	#2 Str.	1/0 Sol.	1/0 Str.	2/0 Str.	3/0 Str.	4/0 Str.
Run	#6 Sol.	Code [1] 305243		–								
	#4 Sol.											
	#4 Str.	Code [1] 305244										
	#2 Sol.											
	#1 Sol.	Code 305245				Code 305246						
	#2 Str.											
	1/0 Sol.											
	1/0 Str.											
	2/0 Str.	–	Code 305247			Code 305249				Code 305846		
	3/0 Str.											
	4/0 Str.											

[1] The MD-6 hand tool may be used on these connectors.

Tap Connectors Compression-Type for Secondary Conductors (copper-to-copper)(continued)

Material

Copper Alloy

Application

Straight splice or tap

Table 23 Figure-6 Type Connectors (Figure 15 on Page 24)

Burndy	Dossert	Tool and Die		Code	Number of Compressions
		Die	Tool		
YP2C2	DC6	O	Alcoa 12A or Burndy Y35	305844	1
YP29C26	DC25–13	D		305845	1
YP28C28	–	D		012086	1

Table 24 Blackburn, Kearney, and Penn-Union Connectors

Code	Blackburn Part No.	Homac Part No.	Kearney Part No.	Penn-Union Part No.	Mechanical Tool		6-Ton Tool		12-Ton Tool	
					Die	# [1]	Die	# [1]	Die	# [1]
305243	CF-44-1	H301-82	301-82	CDT-398-8	W-KB	3	W-KB	3	–	–
305244	CF-22-1	–	301-82	CDT-302	W-KB	3	W-KK	3	–	–
305245	CF-102-1	HCDT-304-8	301-82	CDT-304-8	–	–	–	–	U-O	1
305246	CF-1010-1	HCDT-303-8	301-82	CDT-303-8	–	–	–	–	U-O	1
305247	CF-402-1	H309-82	301-82	CDT-309-8	–	–	–	–	U-D, D3	1
305249	CF-4010-1	HCDT-308-8	301-82	CDT-308-8	–	–	–	–	U-D, D3	1
305846	CF-4040-1	H307-82	301-82	CDT-307-8	–	–	–	–	U-D, D3	1

[1] # = Required number of compressions

Table 25 Splicing and Tapping of XLP-Conc-PVC Cable Concentric Neutrals

Primary Cable Size (XLP-Conc-PVC) Document 039955 [1]		2/0 Cu 1/0 Al 4/0 Al	350 Al	#2 Al	#4 Cu 250 Cu	#2 Cu	700 Al	500 Cu	1,000 Al
	Conc. Size	8 – #14	9 – #14	10 – #14	11 – #14	17 – #14	18 – #14	13 – #12	16 – #12
2/0 Cu 1/0 Al 4/0 Al	8 – #14	Code 305244			Code 305245	Code 305246			Code 305247
350 Al	9 – #14								
#2 Al	10 – #14								
#4 Cu 250 Cu	11 – #14	Code 305245			Code 305246				
#2 Cu	17 – #14								
700 Al	18 – #14								
500 Cu	13 – #12								
1,000 Al	16 – #12	Code 305247							
–	#2 Str. Cu	Code 305245				Code 305246			Code 305249
	#2 Solid Cu	Code 305244							Code 305247

[1] For extension or splicing out of concentric neutral wires, see Document 053732 or Document 051071.

Tap Connectors Compression-Type for Secondary Conductors (copper-to-copper)(continued)

Table 26 Ordering Data for Dies for Use in Alcoa 12A or Burndy Y35 Hydraulic Tool [1]

Die	Kearney Catalog Number	Alcoa Catalog Number	Burndy Catalog Number	Code [2]
O	–	B11AH	U-O	216083
D	–	B-D	U-D3	216084
N	–	B-N	UN-C	216085
BKT	36832	–	U-KBKTT	216133

1 Die sets listed in Table 23 on Page 25 may be used interchangeably in either the Alcoa 12A or Burndy Y35 hydraulic press.
2 Code includes one complete set of dies consisting of two half-sections.

Table 27 Equivalent Conductor Size for Concentric Neutrals [1]

Equivalent Size	Concentric Size
#4 Approximate	8 – #14
	9 – #14
	10 – #14
#2 Approximate	11 – #14
	17 – #14
1/0 Approximate	18 – #14
	13 – #12
	16 – #12

1 To connect these concentric conductors to conductors other than #2, use the equivalent conductor size and select a connector from Table 25 on Page 25.

Terminal Connectors Compression-Type (aluminum cable for flat bar or transformer spade terminals)

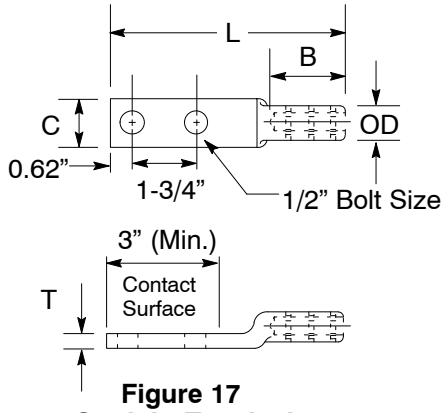

Figure 17
Straight Terminal

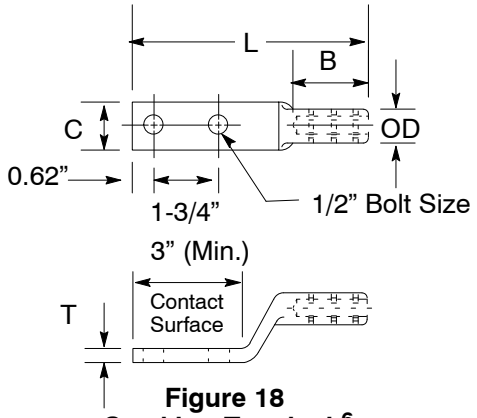

Figure 18
Stacking Terminal [6]

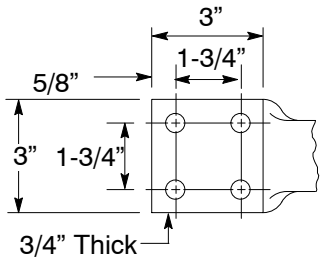

Figure 19
4-Hole Pad [4]

Table 28 Specifications for Terminal Connectors – Aluminum Cable-to-Flat Bar (Figure 17 and Figure 18)

Cable Size AWG or kcmil	Refer to	Approved for Purchase						Tool [2] Index Number
		Approximate Dimensions (inches)					Code	
		B	C [1]	L [1]	T [1]	OD		
4	Figure 17	1.24	1.25	4.92	0.25	0.65	303829	1/0AS
2		1.10	0.91	5.62	0.25	0.65	303761	1/0AS
1/0		1.10	0.91	5.62	0.25	0.65	303760	1/0AS
2/0		1.60	1.25	5.43	0.25	0.91	303830	4/0AS
4/0		1.60	1.25	5.75	0.30	0.91	303759	4/0AS
250		1.96	1.25	5.88	0.25	1.12	303831	350A
350		1.91	1.62	6.84	0.38	1.12	303758	350A
500/600		2.62	1.62	6.78	0.38	1.62	303832	700/750A
700/750 [3]		2.65	1.62	8.22	0.62	1.62	303833	700/750A
1,000 [3]		2.97	1.62	8.88	0.62	1.84	303834	1000A
1,250 [4]		2.58	2.60	7.53	0.51	1.84	303835	1000A
1,500 [4]		3.19	3.09	8.59	0.81	2.26	303836	1500A
1,750 [4]		3.69	3.33	8.38	0.86	2.46	303837	1750A
2,000 [4]		3.69	3.57	8.50	0.94	2.60	303838	2000A
6 [6]	Figure 18 [6] (stacking terminals)	1.50	0.87	5.25	0.21	0.62	303732	–
2 [6]		1.10	0.91	5.62	0.25	0.65	303731	1/0AS
1/0 [6]		1.10	0.91	5.62	0.25	0.65	303730	1/0AS
4/0 [6]		1.52	1.17	6.20	0.30	0.91	303729	4/0AS
250		1.90	1.62	6.6	0.38	1.0	301283	–
350 [6]	Figure 18 [6] (stacking terminals)	2.25	1.62	6.84	0.38	1.12	303728	350A
700/750 [3, 6]		2.65	1.62	8.22	0.62	1.62	303839	700/750A
1,000 [3, 6]		2.97	1.62	8.88	0.62	1.84	303840	1000A

1 These dimensions may vary slightly among the various suppliers.
2 See Table 4 on Page 8 for installation information.
3 These connectors shall be designed to fit side by side on a standard NEMA spade terminal (see Page 31).
4 To order 4-hole terminals larger than 1,000 kcmil, select the Burndy or Homac terminal for the proper cable size and substitute 4 for 2 in the catalog number. Example: YA45A-4NTN or Homac AL-750-4NTN.
5 If it is necessary to stack copper conductors, use aluminum stacking connectors.
6 These connectors shall be capable of being stacked on any straight terminal of equal or larger size (up to and including 1,000 kcmil).

Terminal Connectors Compression-Type (aluminum cable-to-flat bar for transformer spade terminals)(continued)

Table 28 Terminal Connectors (aluminum cable-to-flat bar)(continued)

Cable Size AWG or kcmil	Approved for Purchase			
	Manufacturer and Catalog Number			Code
	Mac Prod. Co.	Homac	Burndy	
4	MLBS 4-8N	SA4NTN	YAR4U2NTN	303829
2	MLBS 2-8N	SA2NTN	YAR2U2NTN	303761
1/0	MLBS 1/0-8N	SA-386-N	YAR1/0U2NTN	303760
2/0	MLBS 2/0-8N	SA2/0-NTN	YAR2/0U2NTN	303830
4/0	MLB 4/0-8N	AL4/0-NTN	YA4/0A2NTN	303759
250	MLBS 250-8N	SAB4/0-NTN	YA250A2NTN	303831
350	MLB 350-8N	AL350-NTN	YA350A2NTN	303758
500	MLBS 500-8N	SAL500-NTN	YA500A2NTN	303832
700/750 [1]	MLB 750-8N	AL750-NTN	YA750A2NTN	303833
1,000 [1]	MLB 1000-8N	AL1000-NMS	YA1000A2NTN	303834
1,250 [2]	MLB 1250-8N	AL1250-NTN	YA1250A2NTN	303835
1,500 [2]	MLBS 1500-8N	AL1500-NTN	YA1500A2NTN	303836
1,750 [2]	MLBS 1750-8N	AL1750-NTN	YA1750A2NTN	303837
2,000 [2]	MLBS 2000-8N	AL2000-NTN	YA2000A2NTN	303838
6 [3, 4]	MDLS 6-8N	ASL 6-NTN	YARSO6U2NTN	303732
2 [3, 4]	MDLS 2 - 8N	ASL 386-N	YARSO2U2NTN	303731
1/0 [3, 4]	MDLS 1/0-8N	ASL1/0-NTN	YARSO1/0U2NTN	303730
4/0 [3, 4]	MDLS 4/0-8N	ASL4/0-NTN	YASO4/0A2NTN	303729
250	–	ASL250-NTN	YASO250A2NTN	301283
350 [3, 4]	MDLS 350-8N	ASL350-NTN	YASO350A2NTN	303728
700/750 [1, 3, 4]	MDLS 750-8N	ASL750-NTN	YASO750A2NTN	303839
1,000 [1, 3, 4]	MDLS 1000-8N	ASL1000-SSNTN	YASO1000A2NTN	303840

1 These connectors shall be designed to fit side by side on a standard NEMA spade terminal (see Page 35).
2 To order 4-hole terminals larger than 1,000 kcmil, select the Burndy or Homac terminal for the proper cable size and substitute 4 for 2 in the catalog number. Example: YA45A-4NTN or Homac AL-750-4NTN.
3 If it is necessary to stack copper conductors, use aluminum stacking connectors.
4 These connectors shall be capable of being stacked on any straight terminal of equal or larger size (up to and including 1,000 kcmil).

Material

Aluminum Alloy, tubular

Tinned

Note

1. Attach using Everdur bolts and washers shown on Page 37.
2. Partially filled with oxide inhibitor and sealed.
3. Connections of copper-to-copper, tinned aluminum-to-copper, and tinned aluminum-to-tinned aluminum require no special precautions other than a clean surface. Any combination involving an untinned aluminum surface requires the application of oxide inhibitor to the surface. Wire brush the surface through the compound thoroughly. Brushing through this inhibitor prevents the oxide from reforming. If in doubt as to the materials or tinning, applying inhibitor will do no harm.
4. Connectors may be ordered undrilled when hole spacing other than shown is necessary.

Terminal Connectors Compression-Type (copper cable-to-flat bar for transformer spade terminals)

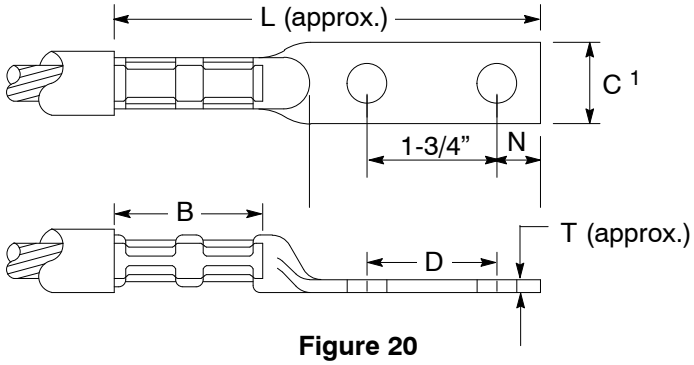

Figure 20

Table 29 Specifications for Terminal Connectors – Copper Cable-to-Flat Bar (Figure 20)

Cable Size AWG or kcmil	Refer to	Approved for Purchase								Tool [1] Index Number
		Dimensions (inches)						Bolt Size	Code	
		B	C	D	L	N	T			
4	Figure 20	1-1/8	13/16	3	4-1/2	5/8	1/8	1/2	303916	4C
2		1-1/4	13/16	3	4-23/32	5/8	1/8	1/2	303221	2C [2]
1		1-3/8	13/16	3	4-7/8	5/8	1/8	1/2	303804	1C
1/0		1-3/8	13/16	3	4-29/32	5/8	1/8	1/2	303209	1/0C
2/0		1-1/2	13/16	3	4-29/32	5/8	1/8	1/2	303220	2/0C
3/0		1-1/2	29/32	3	4-15/16	5/8	1/8	1/2	303219	3/0C
4/0		1-5/8	1	3	5-1/16	5/8	9/64	1/2	303917	4/0C
250		1-5/8	1-3/32	3	5-5/32	5/8	5/32	1/2	303092	250C
300		2	1-11/16	3	5-3/4	5/8	5/32	1/2	303451	300C
350		2	1-25/32	3	5-11/16	5/8	3/16	1/2	303452	350C
400		2-1/8	1-3/8	3	5-7/8	5/8	3/16	1/2	303453	400C
500		2-1/4	1-17/32	3	5-15/16	5/8	15/64	1/2	303093	500C
600		2-11/16	1-1/2	3	6-5/8	5/8	17/64	1/2	303454	600C
750 [3]		2-7/8	1-3/4	3	6-3/4	5/8	17/64	1/2	303296	750C
1,000 [3]		3	1-3/4	3	6-15/16	5/8	21/64	1/2	303461	1000C

1 See Table 4 on Page 8 for installation information.
2 For #2 Solid, use Nicopress “M” Groove.
3 Dimension C shall not exceed 1-3/4”.

Note

1. Attach using Everdur bolts and washers as shown on Table 30 on Page 32.
2. Connections of copper-to-copper, tinned aluminum-to-copper, and tinned aluminum-to-tinned aluminum pads require no special precautions other than a clean surface. Any combination involving an untinned aluminum surface requires the application of oxide inhibitor to the surface. Wire brush the surface through the compound thoroughly. Brushing through this inhibitor prevents the oxide from reforming. If in doubt as to the materials or tinning, application of the inhibitor will do no harm.
3. Connectors may be ordered undrilled when hole spacing other than shown is desired.

Terminal Connectors Compression-Type (copper cable-to-flat bar for transformer spade terminals)(continued)

Table 29 Specifications for Terminal Connectors (copper cable-to-flat bar)(continued)

Cable Size Awg or kcmil	Approved for Purchase				Code
	Manufacturer and Catalog Number				
	Dossert	Mac Prod. Co.	Homac [1]	Burndy	
4	DPL4-2N	MRB4-8N-HD	L4N	YA4C-2N	303916
2	DPL6-2N	MRB2-8N-HD	L2N	YA2C-2N	303221
1	DPL8-2N	MRB1-8N-HD	L1N	YA1C-2N	303804
1/0	DPL10-2N	MRB1/0-8N	L1/0N	YA25-2N	303209
2/0	DPL13-2N	MRB2/0-8N	L2/0N	YA26-2N	303220
3/0	DPL17-2N	MRB3/0-8N	L3/0N	YA27-2N	303219
4/0	DPL21-2N	MRB4/0-8N	L4/0N	YA28-2N	303917
250	DPL25-2N	MRB250-8N	L250-N	YA29-2N	303092
300	DPL30-2N	MRB300-8N	L300-N	YA30-2N	303451
350	DPL35-2N	MRB350-8N	L350-N	YA31-2N	303452
400	DPL40-2N	MRB400-8N	L400-N	YA32-2N	303453
500	DPL50-2N	MRB500-8N	L500-N	YA34-2N	303093
600	DPL60-2N	MRB600-8N	L600-N	YA36-2N	303454
750 [2, 3]	DPL75-2NN	MRB750-8N-1.75	L750-N	YA39-2NNT	303296
1,000 [2, 3]	DPL100-2NN	MRB1000-8N-1.75	L1000-N	YA44-2NG10	303461

1 Homac lugs for 750 and 1,000 kcmil can be furnished with 1-3/4” wide pad.
2 Dimension C shall not exceed 1-3/4”.
3 To order 4-hole terminals, select the Homac or Burndy terminal for the proper cable size and substitute 4 for 2 in the catalog number. For example: YA39-4NNT, for Burndy L750-4N for Homac.

Applications of Compression-Type Terminal Connectors

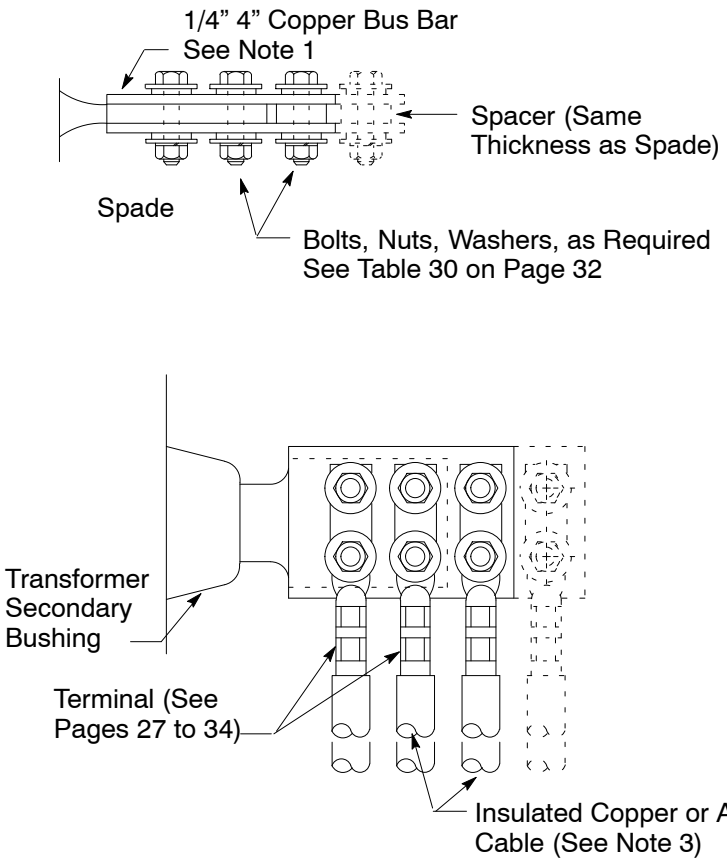

Figure 21

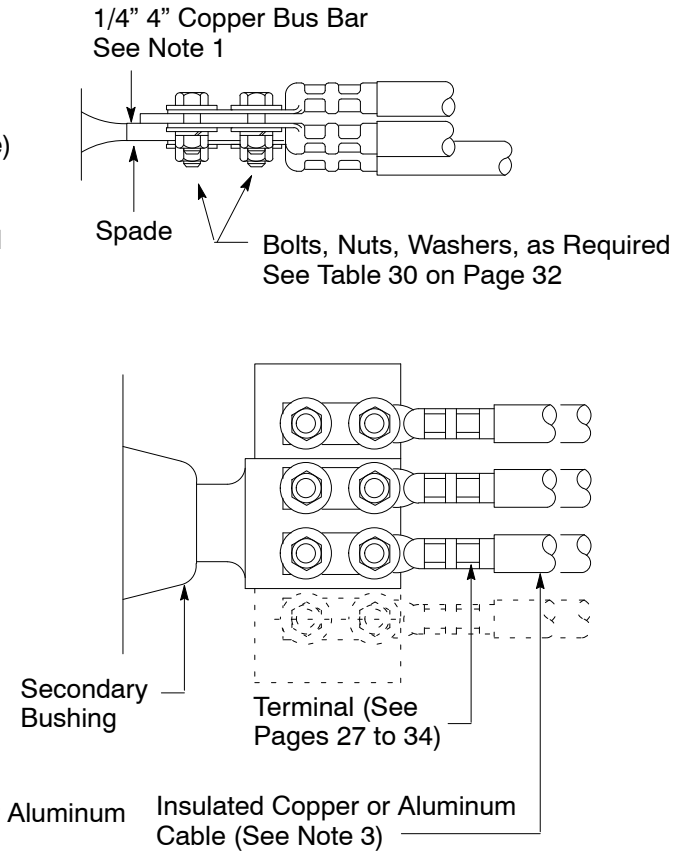

Figure 22

Note

1. Where the transformer spade does not provide sufficient space for cables to be connected, it may be extended with a short length of 1/4” x 4” copper bus bar, 3.86 pounds per foot, Code 156024. The current carrying capacity of the bus bar, when insulated with tape is as follows:

   1,200 amps for one 1/4” x 4” bus bar.

   2,200 amps for two 1/4” x 4” bus bars (one on each side of the spade).

   The spade itself has capacity sufficient for the rating of the transformer.

2. Where large size or a large number of cables are attached to secondary spade, they should be supported to prevent excessive strain on the secondary bushings.

3. Installations shown in this document **cannot** be used for aluminum cables 1,250 kcmil and larger, or copper cables 750 kcmil and larger, as the flat portion of the connector is wider than the hole spacing provided on the transformer spade (see Footnote 1 of Table 29 on Page 29).

Terminal Connectors Bolted-Type (copper cable-to-flat bar for transformer spade terminals)(non-preferred)

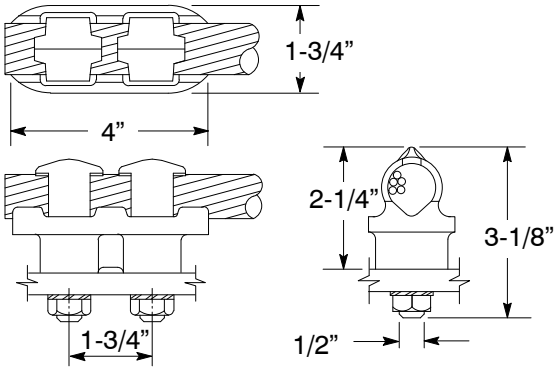

Figure 23

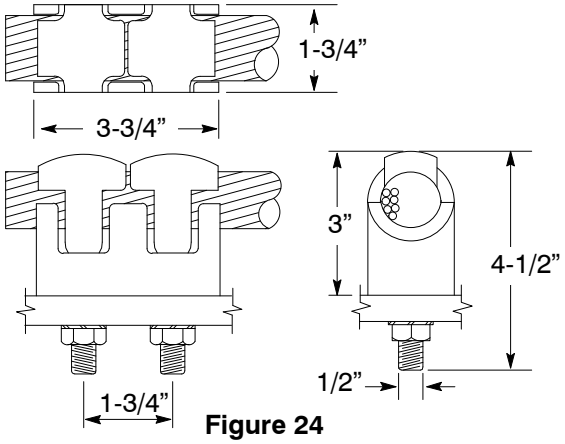

Figure 24

Table 30 Bolts, Nuts, and Washers (Figure 23 above, Figure 28 on Page 35, Figure 38 on Page 43)

Item	Description	Code
1	Screw, Cap (bolt) Everdur, Hex. Head 1/2” x 1-1/2” [1, 2]	193023
2	Screw, Cap (bolt) Everdur, Hex. Head 1/2” x 2” [1, 2]	193025
3	Screw, Cap (bolt) Everdur, Hex. Head 1/2” x 2-1/2” [1, 2]	193177
4	Nut, Bolt, Everdur, Hex. 1/2” [1]	195013
5	Washer, Round, Everdur, 1/2”	195252
6	Washer, Lock, Everdur, 1/2”	195193
7	Screw, Cap (bolt), Steel, CDPL, Hex. HD 1/2” x 1-1/2”	193271
8	Screw, Cap (bolt), Steel, CDPL, Hex. HD. 1/2” x 2”	193272
9	Screw, Cap (bolt), Steel, CDPL, Hex. HD. 1/2” x 2-1/2”	193273
10	Screw, Cap (bolt), Steel, CDPL, Hex. HD. 1/2” x 3”	193274
11	Nut, Bolt, Steel, CDPL, Hex. 1/2”	195449
12	Washer, Round, Steel, CDPL 1/2”	195450
13	Washer, Lock, Steel, CDPL 1/2”	195451

[1] The recommended tightening force for a 1/2” Everdur bolt is 40 foot-pounds. Normally, the use of an 8” wrench will give this range of torque.

[2] Everdur cap screws are low silicon bronze, Spec 651 per ASTM F468 with Class 2A threads.

Terminal Connectors Bolted-Type
(copper cable-to-flat bar for transformer spade terminals)(non-preferred) (continued)

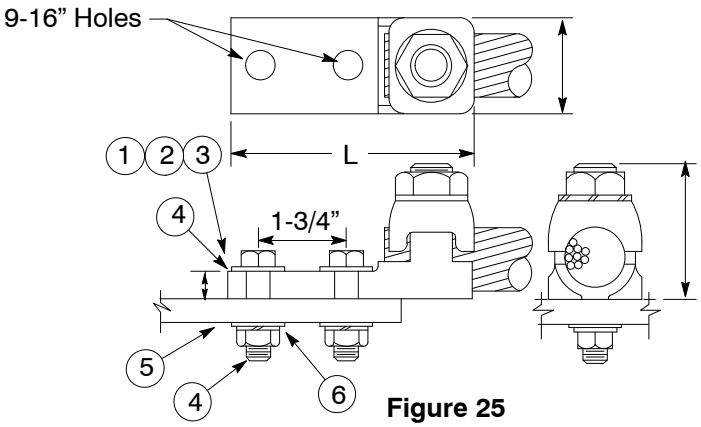

Figure 25

Table 31 Connectors (copper cable eye bolt-to-flat bar type) [1]

Use for Cable Range (AWG-kcmil)	Refer to	Manufacturer and Catalog Number					Code
		A.E. Corp. [2]	Burndy	So. States	Royal	Dossert	
2/0-500	Figure 23 on Page 32	TLD-62	QQGF34-G6	UNNS-4656T	12222	T2L-50E	303169
600-1,000	Figure 24 on Page 32	TLDN-86	QQGFL44-G4	UNNS-5666T	19599	T2L-50E	303286

[1] Connectors shown in Figure 23 and Figure 24 have two cable clamping elements and require a minimum of space and taping. The recommended tightening force for the 1/2” eye bolt on these connectors is 25–40 foot-pounds.

[2] Formerly Anderson Brass Works.

Note

1. See Pages 27 to 35 for preferred compression connectors for this application.

Terminal Connectors Bolted-Type (copper cable-to-flat bar for transformer spade terminals)(non-preferred)(continued)

Table 32 Connectors – Bolted Tongue-to-Copper Cable Type [1] (Figure 26)

Use for Cable Range (kcmil)	Refer to	Manufacturer and Catalog Number			Dimensions (inches) [2]				Code
		Burndy	Royal	Dossert	L	W	H	T	
400-500	Figure 25	QA34-2N	18726	HL 50-2N	4-11/16	1-3/8	1-15/16	5/16	303188
600-800		QA40-2N	18727	HL 80-2N	4-13/16	1-5/8	2-5/16	3/8	303298
850-1,000		QA44-2N	18728	HL 100-2N	4-15/16	1-7/8	2-1/2	1/2	303189

1 The connectors shown in Figure 23 and Figure 24 on Page 32 have two cable clamping elements and require a minimum of space and taping. The recommended tightening force for the 1/2” eye bolt on these connectors is 40 foot-pounds of applied torque.

2 Dimensions shown are for Burndy connectors; others may vary slightly.

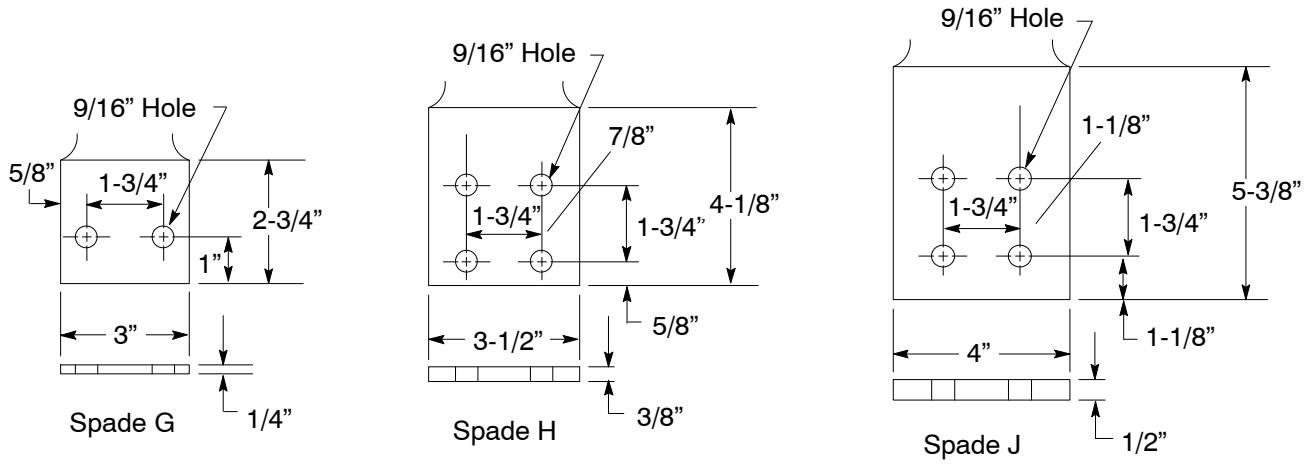

Figure 26
Standard Transformer Spade Terminals (EEI-NEMA)

Terminal Connectors Bolted-Type
(copper cable-to-flat bar for transformer spade terminals)(non-preferred)(continued)

Table 33 Connectors – Copper Cable Eyebolt-to-Flat Bar Type (Figure 27 and Figure 28)

Cable Range (AWG or kcmil) Min – Max	Manufacturer and Catalog Number			Approximate Dimensions (inches) [1]				Code
	Figure 28	Figure 28	Figure 27					
	Burndy	Royal	Dossert	H	J	L	W	
2 – 350	QGFL-31B1	12208	QL35	2-3/4	1/2	1-3/4	1-7/16	303165
1/0 – 500	QGFL-34B1	12209	QL50	3-3/16	1/2	2-1/4	1-13/16	303233
750 – 1,000	QGFL-44B1	12212	QL100	3-1/2	1/2	2-1/4	2-3/16	303179

[1] Dimensions shown are for Burndy connectors; others may vary slightly.

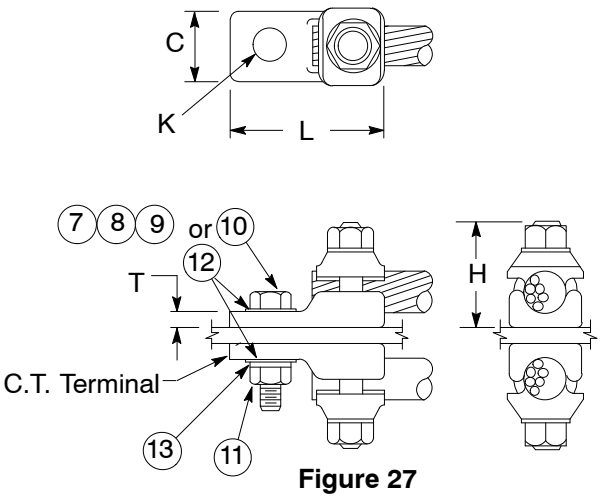

Figure 27

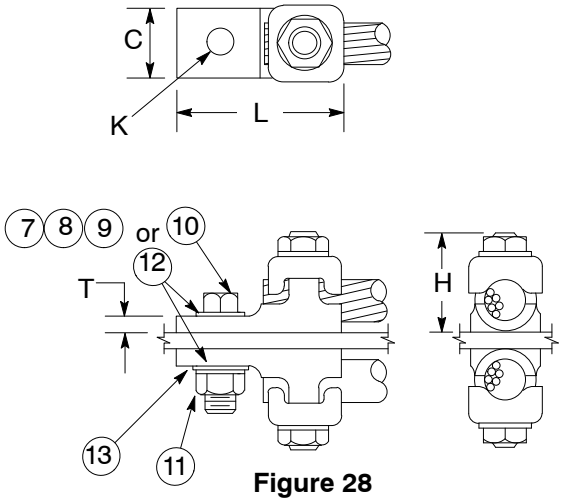

Figure 28

Terminal Connectors Bolted-Type (copper cable-to-flat bar for current transformer terminals only)

Table 34 Connectors – Tongue-to-Copper Cable Type (Figure 27 and Figure 28)

Cable Range (AWG or kcmil) Min – Max	Manufacturer and Catalog Number				Approximate Dimensions (inches) [1]					Code
	Figure 27	Figure 28	Figure 27	Figure 28						
	A.E. Corp.	Burndy	Royal	Dossert	C	H	K (min.)	L	W	
3/0 – 4/0	ITE024-A	QA28-B3	18723	HL 21-1-50	1	1-7/16	9/16	2-1/4	1/4	303297
250 – 350	ITE035-A	QA31-B	18724	HL 35-1	1-3/16	1-11/16	17/32	2-11/16	5/16	303182
400 – 500	ITE050-A	QA34-B	18725	HL 50-1	1-3/8	2	17/32	3-3/16	5/16	303112
600 – 800	ITE080-A	QA40-B	19600	HL 75-1	1-5/8	2-3/8	11/16	3-11/16	3/8	303122
850 – 1,000	ITE100-A	QA44-B	19601	HL 100-1	1-7/8	2-1/2	11/16	3-15/16	1/2	303121

[1] Dimensions shown are for Burndy connectors; others may vary slightly.

Notes

1. Connectors shown in Table 33 on Page 35 are less costly than those shown in Table 34 and should be used when connecting one cable to bar-type primary terminal.
2. Use connectors shown in Table 33 on Page 35 to connect two cables to bar-type primary terminal by placing them back-to-back as shown in Figure 27 and Figure 28 on Page 35.

   Where severe corrosive conditions exist, use Everdur cap screws, nuts, and washers shown in Table 30 on Page 32.
3. For conductor sizes smaller than shown, shim up the connector with short lengths of conductor strands.

Tap Connectors for Cable Termination (copper or aluminum cable) Pad-Mounted Transformers

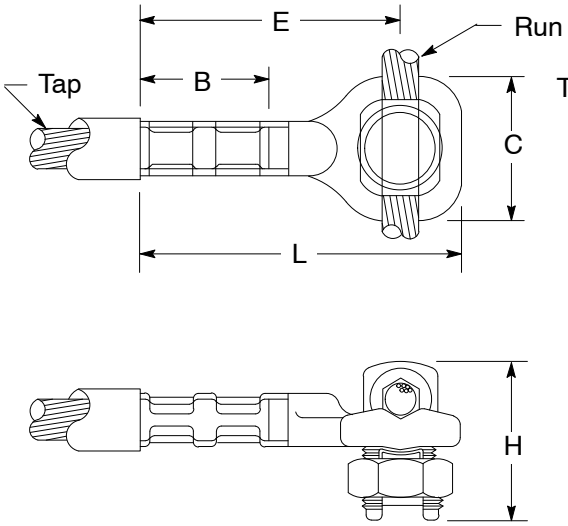

Figure 29

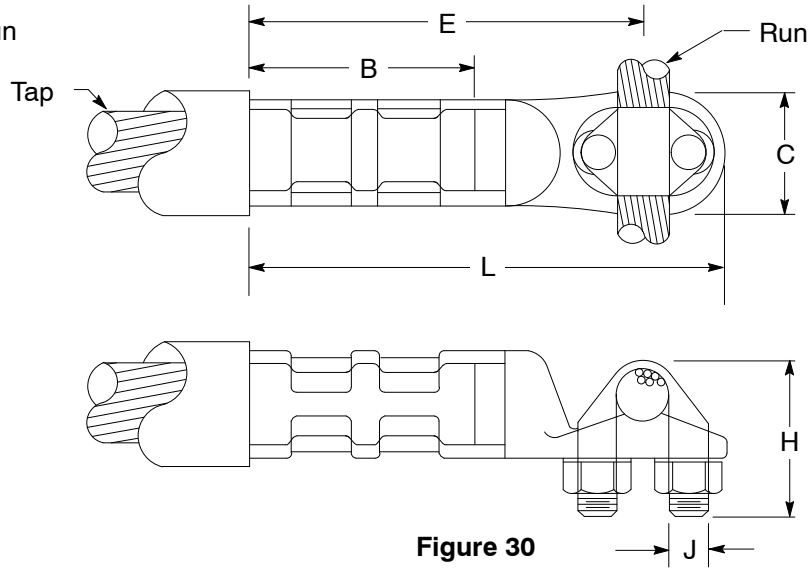

Figure 30

Table 35 Tap Connectors – Tee-Type (copper-to-copper, for circuits 5,000 V or lower) (Figure 29 and Figure 30)

Cable Size AWG or kcmil		Approved for Purchase										Tool Index Number[1]
Run	Tap	Refer to	Dimensions (inches)						Burndy Catalog Number	Dossert Catalog Number	Code	
			B	C	E	H	J	L				
6 to 2/0	2	Figure 29	1-11/32	1-5/8	2 -17/32	1-13/16	–	3-7/32	VYT262CG1	UTDK 13-6	305638	2C
6 to 2/0	2/0		1-17/32	1-5/8	2 -23/32	1-13/16	–	3-13/32	VYT2626G1	UTDK 13-13	305639	2/0 C
1/0 to 300	2	Figure 30	1-11/32	1-3/8	2 -3/4	1-27/32	7/16	3-23/32	VYT302C	UTSK 30-6	305640	2 C
1/0 to 300	2/0		1-17/32	1-3/8	3-1/16	1-27/32	7/16	4	VYT3026	UTSK 30-13	305641	2/0 C
1/0 to 300	250		1-21/32	1-3/8	3-1/4	1-27/32	7/16	4-7/32	VYT3029	UTSK 30-25	305642	250 C
1/0 to 300	500		2-9/32	1-3/8	3-1/16	1-27/32	7/16	5	VYT3034	UTSK 30-50	305643	500 C

[1] See Table 3 on Page 7 and Table 4 on Pages 8 and 8 for installation information.

Note

1. If Tee Connectors, shown in Figure 29 and Figure 30 are to be attached to an aluminum overhead conductor run, use a short length of bare copper conductor between the connector and the aluminum conductor, and attach it with a fired wedge per Document 066194.
2. If the desired connector size is not shown, special sizes may be acquired by ordering a connector similar to the connector shown.

Tap Connectors for Cable Termination (copper or aluminum cable) Pad-Mounted Transformers (continued)

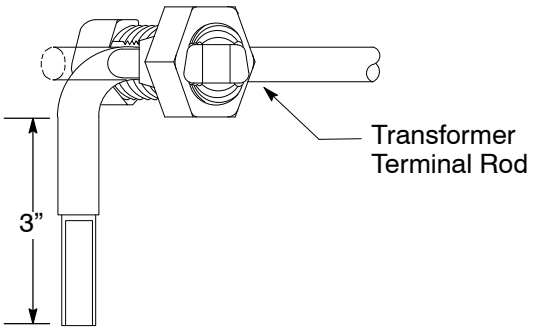

Figure 31

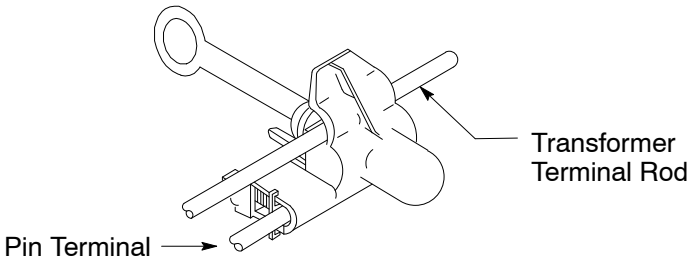

Figure 32
Blackburn Catalog Number PGH3, Code 305997

Application: Tap clamp for live-front loop-style, 3-phase pad-mounted transformer. Document 045291 and Document 057521 conductor range #2 AWG to 2/0.

Application

See “Low Profile” Single-Phase 6.9 and 12 kV pad-mounted transformer, Document 042762 and Document 042765.

Table 36 Tap Connectors for Cable Termination in “Low-Profile” Pad-Mounted Transformers (Figure 31)

Connector Size AWG or kcmil	Refer to	Manufacturer and Catalog Number	Tool Index Number [1]	Code
		Kortick		
4 Cu	Figure 31	PMT-401	4C	305057
2 Cu		PMT-201	2C	305058
2 Al		PMTA-201	2C	305153
1/0 Al		PMTA-1001	1/0A	305264

[1] See Table 3 on Page 7 and Table 4 on Pages 8 and 8 for installation information (crimp instruction/orientation).

Primary T-Connectors, Compression-Type, Aluminum-to-Aluminum, Copper-to-Aluminum, or Copper-to-Copper

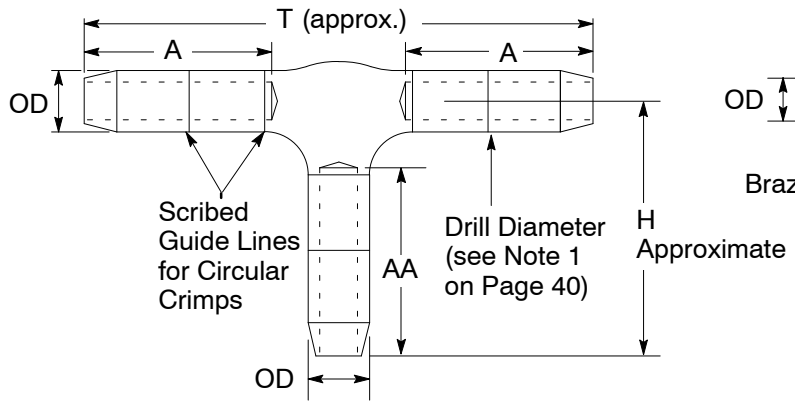

Figure 33
(for circuits above 5,000 V)

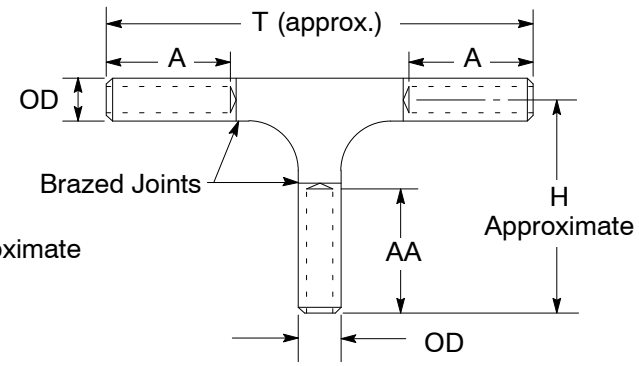

Figure 34

Table 37 Primary T-Connectors, Compression-Type - Aluminum-to-Aluminum or Copper-to-Aluminum (for circuits above 5 kV) (Figure 33)

Conductor Size AWG or kcmil		Refer to	Approved for Purchase					Tool [1] Index No.
			Dimension (inches)		Manufacturer and Catalog Number		Code	
			A		Burndy	Dossert		
Run	Tap		Burndy	Mac				
2	2	Figure 33	1-21/32	1-7/8	YST2CU2CUT	CVT6-6-S-AA	305266	See Table 40 on Page 41
4	2		1-21/32	1-7/8	YST4CU2CUT	CVT4-6-S-AA	305268	
1/0	1/0		1-3/4	1-7/8	YST25U25UT	CVT10-10-S-AA	305270	
1/0	2		1-3/4	1-7/8	YST25U2CUT	CVT10-6-S-AA	305271	
#2-4/0	#2-4/0		3-3/32	–	YST28TG1	CVT6-6-S-AA	305380	
4/0-250	#2-250		3-5/8	–	YST29TG1	CVT21-6-S-AA	305384	
350-500	#2-500		4-9/32	–	YST34TG1	CVT35-6-S-AA	305386	
700-1,000 [2]	#2-700 [2]		4-25/32	–	YST39TG1	CVT70-6-S-AA	305398	

1 See Table 3 on Page 7 and Table 4 on Pages 8 and 8 for installation information.
2 Maximum conductor size for aluminum only. Maximum copper size is 750 kcmil for run and 500 kcmil for tap.

Primary T-Connectors, Compression-Type, Aluminum-to-Aluminum, Copper-to-Aluminum, or Copper-to-Copper (continued)

Table 38 Cable/Drill Information

Cable (aluminum) AWG or kcmil		Drill Information	
Size	Diameter (inches)	Diameter (inches)	Drill Size
2 Str.	0.292	0.312	5/16”
1 Str.	0.332	0.359	23/64”
1/0 Str.	0.373	0.391	25/64”
2/0 Str.	0.419	0.438	7/16”
3/0 Str.	0.470	0.500	1/2”
4/0 Str.	0.528	0.562	9/16”
250	0.575	0.594	19/32”
300	0.629	0.656	21/32”
350	0.681	0.719	23/32”
400	0.728	0.766	49/64”
500	0.813	0.859	55/64”
600	0.893	0.922	59/64”
700/750	0.998	1.062	1-1/16”
1,000	1.152	1.172	1-11/64”

Material

Aluminum

Application

Tap splices for above 5,000 V, see Document 041583 and Document 043901

Notes

1. Barrels are factory drilled to accommodate the minimum conductor OD. Holes may be enlarged in the field to accommodate other cable sizes within the range shown in Table 37 on Page 39**.** Enlarge holes with a drill press or other similar precision tool and chamfer the hole ends.
2. Connectors shall be filled with oxide inhibitor and sealed.

Table 39 Primary T-Connectors, Compression-Type - Copper-to-Copper (Figure 34 on Page 39)

Conductor Size AWG or kcmil		Refer to	Dimensions (inches)						Manufacturer and Catalog Number			Tool Index Number [1]	Code
			A	AA	H	T	OD		Burndy	Homac	Dossert		
Run	Tap						Run	Tap					
2	2	Figure 34 on Page 39	1.23	1.23	2.16	4.31	0.42	0.42	YSTP2C2CT	2T2	CVT6-6	2C	305808
2	4		1.23	1.09	2.04	4.31	0.42	0.34	YSTP2C4CT	2T4	CVT6-4	2C	305809
4	4		1.09	1.09	1.84	3.88	0.34	0.34	YSTP4C4CT	4T4	CVT4-4	4C	305810

[1] See Table 3 on Page 7 and Table 4 on Pages 8 and 8 for installation information.

Primary T-Connectors, Compression-Type, Aluminum-to-Aluminum, Copper-to-Aluminum or Copper-to-Copper (continued)

Table 40 Tooling from Table 37 on Page 39

Connector	Tool Index Number	
	Burndy	
Code	Run	Tap
305266	1/0A	1/0A
305268	2A	1/0A
305270	3/0A	3/0A
305271	3/0A	1/0A
305380	350A	350A
305384	400A	400A
305386	750A	750A
305398	1000A	750A

Material

Copper

Finish

Tin Plated

Application

Tap splices for above 5,000 V, see Document 041583 and Document 043901.

Slip-Fit Connector Installation, Aluminum or Copper Cable

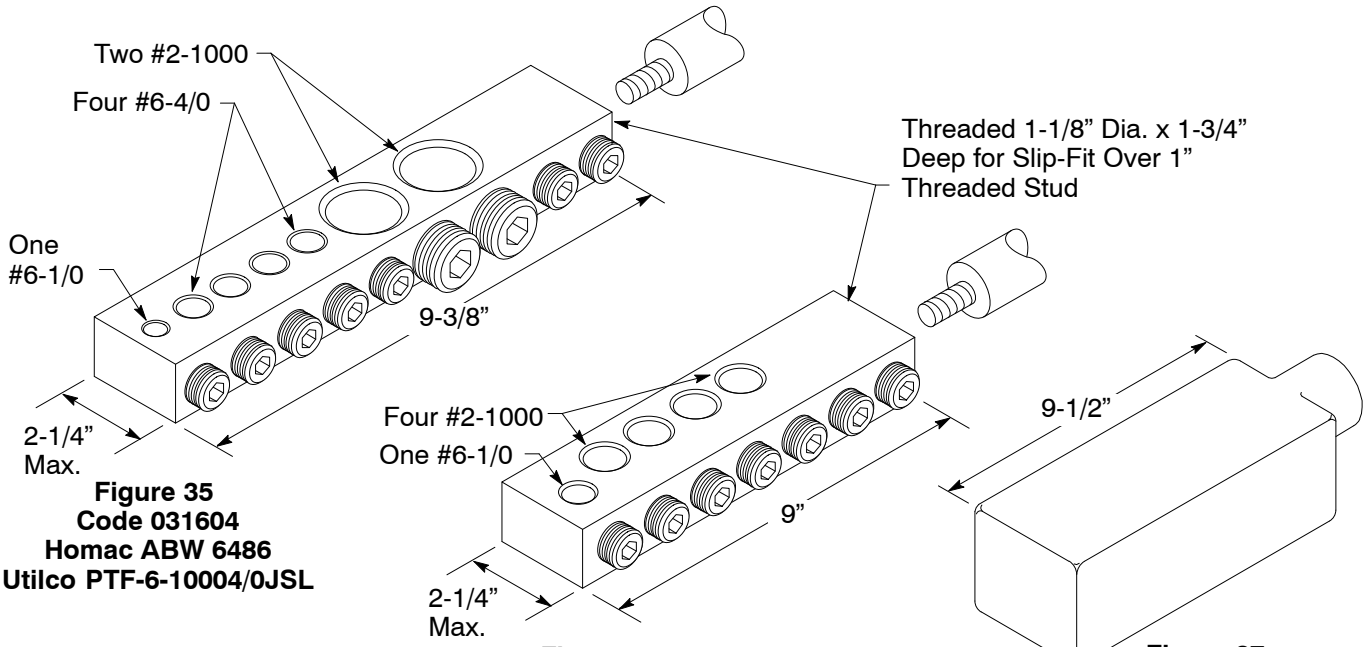

Figure 35
Code 031604
Homac ABW 6486
Utilco PTF-6-10004/0JSL

Figure 36
Code 300010
Homac ABW 4100SL
Utilco PTL4-1000JSL

Figure 37
Secondary Cover
Code 031605
Homac SB6486

Scope

This page shows slip-fit connectors for single-phase, dead-front transformer, low voltage, secondary installations (see Document 064308).

Notes

1. All set screws to be 5/16” Allen head drive.
2. The bar is rated in excess of 1,600 amps, which exceeds the maximum allowable transformer load.
3. Connectors may be used for aluminum or copper conductors.
4. Never combine conductors in one port.
5. Connector is designed to slip onto the stud even though the terminal is threaded.
6. Secondary cover, see Figure 37, is a tool to be used when required to insulate the energized secondary slip-fit connectors.

Instructions

1. Remove any jam nuts from transformer studs.
2. Slide the connector onto the transformer stud, position the connector to allow a straight, smooth cable entry, mesh the threads together, and tighten the setscrews to lock the connector in place.
3. To prepare the cable, remove the insulation, wire brush the conductor, and apply inhibitor.
4. Insert the conductor in the port and tighten the setscrew.
5. After completing work on the secondary connectors, make sure all connections are tightened as indicated in Table 41.

Table 41 Conductor/Torque

Conductor	Torque (ft/lbs)
#6 – 350 and Transformer Stud	25
500 – 1,000	40

Multiple Transformer Terminal Aluminum or Copper Cable

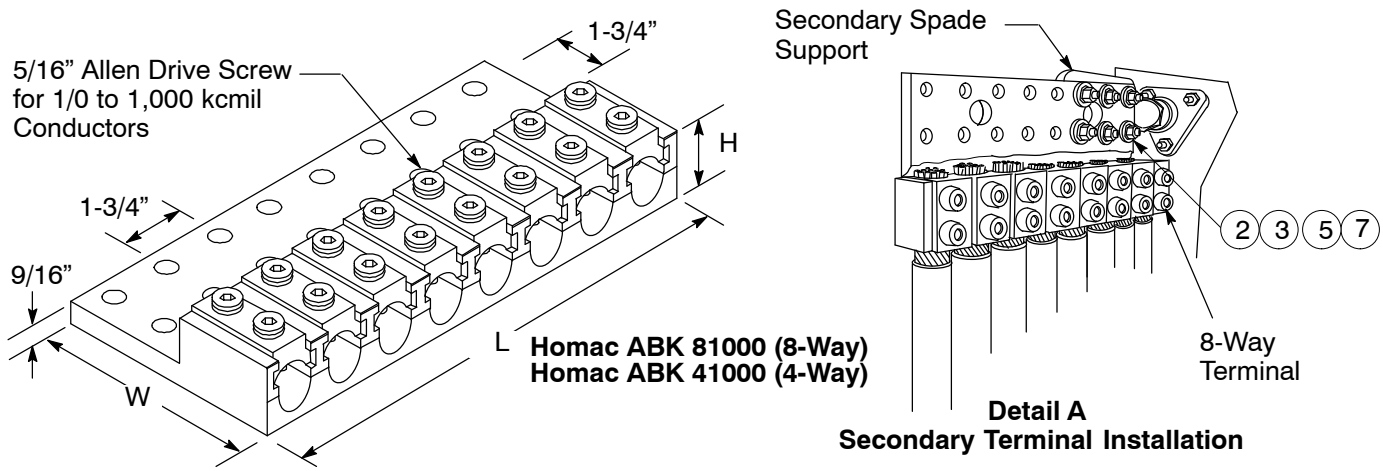

Figure 38
8-Way Terminal Illustrated (1,000 kcmil)

Table 42 EZ Keeper Lay-In Terminals for Copper or Aluminum Conductors (600 V or lower) (Figure 38)

Conductor Range	Ampacity (minimum)	Number of Conductors	Refer to	Dimensions – Approximate (inches)			Mounting Hole Diameter	Code
				L	W	H		
1/0 – 1,000	3100	4	Figure 38	7.0	6.25	1-7/8	9/16”	301281
	5100	8		13.75	6.25			301282

Scope

These connectors are for use in connecting service cables from 1/0 to 1,000 kcmil to the spade of three-phase, pad-mounted transformers (Document 043817 and Document 045291). Cable-to-flat bars are replaced in this design by set screws and a removable lay-in connection. If needed to terminate a #2 neutral onto one of these bars, it is necessary to splice a piece of 1/0 tail for insertion into the lay-in port.

Notes

1. Connectors may be used for copper or aluminum conductors.
2. Never put more than one cable in a port.
3. Install the lower (X_0 and X_2) connectors first, then the higher (X_1 and X_3). Use as many bolts as there are holes in the spade.
4. If transformer spades are not supported, install a secondary cable support kit (see Document 045291).
5. To prepare the cable, remove the insulation, wire brush the conductor, and apply inhibitor.
6. Make sure all set screws are tightened as indicated in Table 41 on Page 42. (Torque them to the specified value, wait 5 minutes, and make the final torque).
7. See Table 30 on Page 32 for bolts, nuts, and washers.

Pin Terminals

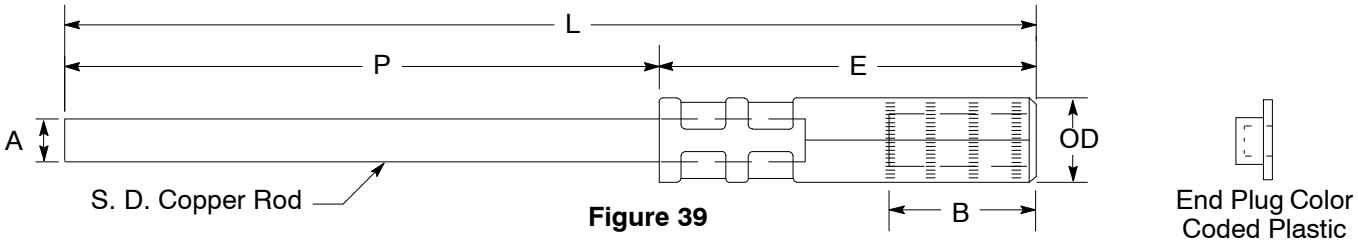

Figure 39

Table 43 Specifications for Aluminum Pin Terminal [1]

Copper/ Aluminum Cable Size	Copper Stud Equivalent	Approved for Purchase							Tool Index Number [2]
		Dimension (inches)						Code	
		A	B	OD	E Approximate	L Approximate	P		
6	8	0.250	1.75	0.65	3.25	9.25	6.00	303843	1/0AS
2	4	0.250	1.75	0.65	3.25	9.25	6.00	303844	1/0AS
1/0	2	0.250	1.75	0.65	3.25	9.25	6.00	303845	1/0AS
4/0	2/0	0.375	1.54	0.91	3.50	10.9	6.00	303846	4/0AS
350	4/0	0.460	2.25	1.12	4.70	10.7	6.00	303554	350A
500/600	500	0.750	2.56	1.57	6.30	12.3	6.00	300013	500A
700	500	0.750	2.56	1.60	6.30	12.3	6.00	303555	700/750A
1,000	700	0.750	2.56	1.60	6.30	12.3	6.00	033757	1000A

1 See Table 3 on Pages 7 and 8 for installation information.
2 See Table 51.

Table 43 Ordering Information for Aluminum Pin Terminal [1] (continued)

Copper/ Aluminum Cable Size	Copper Stud Equivalent	Approved for Purchase				Tool Index Number [2]
		Manufacturer and Catalog Number			Code	
		Mac Prod. Co.	Homac	Burndy		
6	8	AAS68-5	SAPT-6-26	YE6R-40	303843	1/0AS
2	4	AAS2-45	SAPT-2-26	YE2R-40	303844	1/0AS
1/0	2	AAS1/0-25	SAPT-1/0-26	YE25R-60	303845	1/0AS
4/0	2/0	AAS4/0-2/0S	SAPT-4/0-206	YE28R-60	303846	4/0AS
350	4/0	AAS350-4/0S	PTB-350-6	YE31AG3	303554	350A
500/600	500	–	PTM-500-346	YE34APGE	300013	500A
700	500	AAS750-500S	PTL-750	YE39AGB	303555	700/750A
1,000	700	–	PTF-1000-346	YE44AG7	033757	1000A

1 See Table 3 on Pages 7 and 8 for installation information.
2 See Table 44 on Page 45.

Material

Copper Rod-Soft Drawn, Tinned

Aluminum Connector EC Grade, Untinned

Note

1. Connector is supplied pre-filled with inhibitor and sealed.
2. Pin terminals connected to copper secondary conductors use a copper connector. Pin terminals connected to aluminum secondary conductors use a fired wedge or n-tap.
3. Rod up to 1/0 may be bent for installation convenience. It is recommended that bending occur at least 1” beyond the compression sleeve.

Application

1. To make straight connections of insulated aluminum secondary neutral to bare copper neutral, see Page 8.
2. To connect aluminum primary stress cone termination to terminal tap connector or cutout.

Pin Terminals (continued)

Table 44 Color Coding

Color Coding Requirements for Plastic End Plugs in Pin Terminals	
Conductor Size	Plug Color
#6	Blue
#2	Red
1/0	Yellow
4/0	Pink
350	Brown
700	Purple

Table 45 Specifications and Ordering Information for Copper Pin Terminal

Copper Cable Size	Copper Stud Size	Dimensions (inches)						Tool Index Number [1]	Code
		A	B	OD	E	L	P		
2	2	0.25	1.25	0.415	2.25	9.00	6.00	2C	303847
2	2/0	0.365	1.25	0.500	1.500	8.070	6.500	2CS	303848

[1] See Table 3 on Page 7 and Table 4 on Pages 8 and 8 for installation information.

Table 45 Ordering Information for Copper Pin Terminal [1] (continued)

Copper Cable Size	Copper Stud Size	Manufacturer and Catalog Number			Tool Index Number [1]	Code
		Dossert	Mac Prod. Co.	Burndy		
2	2	SDP 6-PG	CAS2-2	YE2CLH128	2C	303847
2	2/0	SDP 6-S-PG	CAS2/0-2	YCE2CG3	2CS	303848

[1] See Table 3 on Page 7 and Table 4 on Pages 8 and 8 for installation information.

Material

Copper Rod-Soft Drawn, Tinned

Note

1. Rod may be bent for installation convenience. It is recommended that bending take place 1/2” beyond the copper sleeve.

Application

1. To make straight connections of insulated aluminum secondary neutral to bare copper neutral, see Page 8.
2. To connect bare copper secondary neutral to aluminum bar connector using Thermofit boot, see Document 036640.

Revision Notes

Revision 05 has the following changes:

1. Added General Information Note 5 on Page 2.
2. Revised Table 24 on Page 25.

Prepared by: SXZO

REQUIREMENTS FOR CUSTOMER-OWNED POLES

025055

Asset Type:	Electric Distribution	**Function:**	Construction
Issued by:	D.Jantz (DWJ7)	**Date:**	07–01–16

Rev. #15: This document replaces PG&E Document 025055, Rev. #14. For a description of the changes, see Page 17.

This document is also included in the following manuals:

- *Electric and Gas Service Requirements Manual* (Greenbook)
- *Electric Meter Work Practices*

Purpose and Scope

Equipment installed on service poles as shown in this document will also meet the requirements of the California Building Standards Code - Electrical Regulations. These requirements have been established by the state of California in the interest of safety to the public and to workers, and are applicable to all customer-owned service poles. PG&E cannot establish service to poles that do not meet these minimum requirements. The maintenance of customer-owned service poles in conformity with these requirements is the sole responsibility of the customer.

Local ordinances may include wiring requirements in addition to those shown in this document. Consult local inspection authorities for these requirements and for city or county permits and inspections that may be required before service can be connected.

References	Location	Document
Dead-End Attachments for Service and Street Light Drop Cables	ELS	015009
Methods of Attaching Services to Customers Premises	OH: Services	025202
Dead-End and Angle Attachments for Aluminum Conductors - Distribution Lines	OH: Conductors	028851
Connectors for Aluminum Conductors on Distribution Lines	OH: Conductors	028852
Temporary Underground Electric Service Single-Phase, 120/240 Volt 200 Amps Maximum	UG-1: Services/Greenbook	036670
Conductors for Overhead Lines	OH: Conductors	059626
Overhead and Underground Panel Board Construction	OH Services/UG-1 Services/Greenbook	065374
Engineering Material Specification #57 "Preservative Treated Wood Poles, Stubs, and Anchor Logs for Overhead Lines"	TIL	EMS57
Utility Standard TD-2325S, "Wood Pole Inspection, Testing, and Maintenance"	TIL	TD-2325S

Temporary Service Pole Installation

1. The use of temporary service poles must be restricted to installations of a temporary nature, such as building construction, temporary sales locations, etc., where the period of service is estimated to be 1 year or less.
2. Temporary service poles must be furnished and installed by the customer and may be wooden or metallic. The minimum length must be 20 feet (set 4 feet in the ground). A longer pole may be necessary to provide the required clearance from the ground (see Note 9 on Page 4) or to supply the customer's overhead line (see Figure 3 on Page 8).
3. A temporary, wood service pole may be rectangular or circular in cross section and must be solid (not laminated). Rectangular poles must have a minimum cross section of 6" x 6" nominal; circular poles must meet the requirements for permanent service poles specified in Note 7 on Page 2 except that the minimum length may be 20 feet providing the required clearances are maintained.

4. The butt of the temporary, wood service pole must at least be painted with creosote or other approved preservative. However, it is recommended that these poles be full-length treated with a suitable preservative in order to obtain the maximum useful life of the pole and to provide increased safety to workers and to the public. The permanent service pole specified in Note 6 below is approved for temporary installations. It will usually be the more economical pole for repeated use.
5. A metal pole may be used for temporary service provided its strength is at least equivalent to the wood service poles specified in Note 3 on Page 1 and provided its base or foundation is designed to provide at least an equivalent resistance to overturning when set at the same depth. The use of 4-inch extra-strong steel pipe (Schedule 80), set in concrete to obtain equivalent bearing surface, or the use of a 5-inch standard steel pipe (Schedule 40), set directly in the ground, will meet these requirements.

Permanent Pole Installation

6. A permanent wood or metal service pole must be used when it is estimated that the installation will remain for a period longer than 1 year. Permanent wood service poles, as specified in Note 7, must be furnished and installed by the customer. PG&E will, however, furnish and install the pole (wood or metal) exclusive of wiring and service entrance equipment, at the customer's expense, if the customer is unable to have the pole installed by a private contractor.
7. Customer Owned Wood Poles:
   A. Customer-owned, permanent wood poles must meet all pertinent requirements of ANSI O5.1.2008, "Wood Poles – Specifications and Dimensions," and American Wood Protection Association Standards T1-10 and U1-10, as modified or described in Engineering Material Specification 57, "Preservative Treated Wood Poles and Stubs for Overhead Lines."
   B. Approved pole suppliers and treatments are shown in Table 1 and Table 2 of this document.
   C. For poles that will have a final height greater than 20 feet above ground level, the Federal Aviation Administration (FAA) may require the applicant to file a notice a minimum of 45 days prior to the installation of the pole. The FAA may issue a determination of hazard to air navigation and recommend actions to mitigate or eliminate that hazard. Please contact your PG&E project coordinator for additional information
   D. **Before** setting the pole(s), the customer/contractor must notify the local PG&E inspector who will look at the pole(s) to verify that they meet the requirements stated within this note (Note 7).
   E. Customer-owned, permanent wood poles must be of circular cross section, minimum Class 6, with a minimum length of 25 feet (4-1/2 feet in the ground). A longer pole may be necessary to obtain the required clearance from the ground. Consult PG&E before ordering. Exception: minimum length may be 20 feet providing the required clearances are maintained.
   F. The pole brand must remain visible at all times. The customer-owner shall not install the main service switch meter socket box, or conduit runs over the brand.
   G. Used poles may be installed provided they are inspected and accepted by PG&E **before** installation.
   H. Applicants must obtain a certificate of treatment or a letter from a supplier indicating that the pole was treated in accordance with the American Wood Protection Association (AWPA) and ANSI requirements. PG&E should receive a copy of this certificate before accepting the pole.
   I. As an alternate method to note D above document TD–025055B–001 Verifying Pole Depth of Customer Owned Poles, provides requirements for applicants who plan to install a new customer–owned service pole prior to inspection by PG&E personnel. Contact your project coordinator for this document.
8. A metal pole may be used for permanent service provided its size and strength are at least equivalent to the wood pole described in Note 7,and provided its base or foundation is designed to provide at least equivalent resistance to overturning when set at the same depth. The following are some poles that will meet these requirements:
   A. An 11-gauge steel pole with 8-1/2-inch minimum diameter at ground line, set directly in the ground.
   B. A 7-gauge steel pole with 7-inch minimum diameter at ground line, set directly in the ground.
   C. A 5-inch extra-strong steel pipe (Schedule 80) set in concrete to obtain equivalent bearing surface.
   D. A 6-inch standard steel pipe (Schedule 40) set in concrete to obtain equivalent bearing surface.

All steel permanent metal poles must be galvanized.

Table 1 Approved Suppliers for Permanent Wood Poles (Table 5, Item 2 on Page 7) [1]

Service Poles 35 Feet and Shorter:	
Koppers	Pacific Wood Preserving of Oregon
McFarland Cascade	Thunderbolt Wood Treating
Nevada Wood Preserving	
Distribution Poles Taller than 35 Feet:	
McFarland Cascade (Tacoma, WA. or Eugene, OR. Yards only)	

1 Service poles are sold to lumberyard/hardware companies.

Table 2 Approved Service Pole Treatments [1]

Species	Treatment			
	Penta-A Pressure (Oil-Penta) (PA)	Ammoniacal Copper Zinc Arsenate (ACZA)	Creosote (C)	Chromated Copper Arsenate (CCA)
Western Red Cedar	X	X	X	X
Douglas-Fir	X	X	X	–

1 All poles must be full-length treated, except Western Red Cedar may be butt treated with oil pentachlorophenol.

Table 3 Pole Setting Depths

Pole Length (feet)	Setting Depth (feet)	
	Firm Soil	Rock
25	4-1/2	3
30	5	3
35	5	3-1/2
40	5-1/2	3-1/2
45	6	4

Table 4 Customer's Service Attachment Location [1, 2]

Panel Rating (amps)	Minimum Distance From Top of Pole (inches)	Service Attachment (type)
< = 225	16	Weatherhead
226-400 (1-Phase) [3]	32	3 Spool Extended Rack
226-400 (3-Phase) [3]	40	4 Spool Extended Rack

1 All open wire services require extended rack construction. See Figure 7 on Page 11 and Figure 4 on Page 9.
2 A longer pole may be necessary to obtain the required service clearances from the ground. See note 9D on Page 4.
3 See Note 26 on Page 6.

Vertical Clearance for Service Poles

9. Conductors to service poles must have a minimum ground clearance as follows:
   A. Over the center portion of the street, 18’ 0” minimum. For conductor height over trolleys, railroad tracks, telephone lines, etc., consult PG&E.
   B. At the curb or outer limits of possible vehicular traffic, 16’ 0” minimum.
   C. Over private driveways, lanes, or other areas accessible to vehicles used for industrial, commercial, or agricultural purposes, 16’ 0” minimum.
   D. **If required clearances cannot be obtained with a minimum-length service pole and the constructions illustrated on Pages 7 through 9, the required clearances should be obtained by using a longer pole**. The setting depth for a 25-foot and longer pole must be as specified in Table 3 on Page 3.

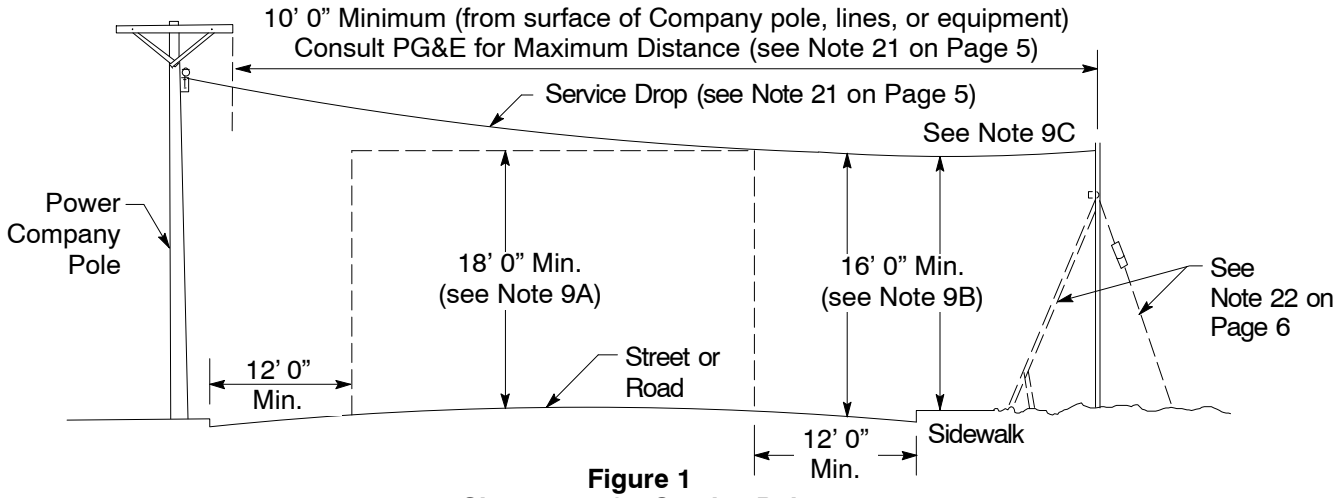

Figure 1
Clearances for Service Poles

Service Entrance Conductors

10. The customer must furnish, install, and maintain the service entrance wiring and service equipment beyond the point of attachment to PG&E’s service wires. The service entrance wires must be continuous and must be of a size and type that will provide not less than the minimum standard of safety as specified in local city and county ordinances or, where there is no local ordinance, as specified in the current issue of the National Electrical Code (NEC).
11. The neutral conductor of 2-wire, 120 V and 3-wire, 120/240 V (or 120/208 V) services must be securely connected to the neutral terminal of the meter socket and extended through to the neutral terminal of the service entrance switch. It must be continuous (without splice) from the service head to the service entrance switch.
12. At least 18 inches of service entrance conductors must be provided outside the service head.
13. Weatherproof wire is not permitted in conduit.

Service Entrance and Load Side Conduit and Conduit Covering

14. Service entrance and load side conduit and conduit covering requirements must comply with applicable codes and local requirements. *G.O. 95* requires that any conduit installed **below** the 8-foot level on the pole must be treated as a riser; in which case, the conduit must be either rigid galvanized steel or 2-inch minimum diameter Schedule 40 PVC.

    Exception: Conduit that enters the top of an enclosure is considered to be "protected" by the enclosure and need not be treated as a riser unless installed below the 6-foot level. Conduit installed above the 6-foot or 8-foot level (whichever height applies) must be either: (1) galvanized rigid steel conduit, (2) rigid aluminum conduit, (3) electrical metallic tubing, (4) IMC, or (5) PVC plastic conduit having a minimum wall thickness of 0.15 inches (Schedule 40 for 2-inch PVC conduit or larger, Schedule 80 for 1-1/2-inch or smaller). All fittings must be rain-tight. If PVC plastic conduit is used, it need not be covered. If rigid steel or other approved metallic conduit is used, it must be enclosed with PVC "U" shaped molding for a minimum distance of 8 feet below the lowest open service entrance conductor. The covering must be fastened to the pole at intervals not greater than 3 feet (see Page 11).

15. Wood Block:

    A. A wood block must be attached directly over the service head in the following situations:

    (1) On a service pole where electrical metallic tubing, rigid steel, or IMC is used.

    (2) On a wood pole with plastic conduit installation when the service head is metallic and the neutral service entrance conductor is not insulated.

    B. A wood block over the service head is not required in the following instances:

    (1) On a service pole with plastic conduit installation except as noted in Note 15, A. above.

    (2) On a metallic pole, provided the pole is effectively grounded and provided all metallic conduits are adequately bonded to the metal pole with approved clamps or connectors.

    C. Attach wood blocks as shown on Pages 8 through 10.

16. All conduit and fittings must be rain-tight.

17. Water pipe and fittings are not permitted for use as electrical conduit.

Service Entrance Switch

18. Main switch, receptacles, and other equipment on the load side of the meter must be of weatherproof design or protected by weatherproof enclosures. Such equipment must comply with local ordinances and must also comply with the California Building Standards Code - Electrical Regulations.

19. The switch cover must be locked if the enclosure contains exposed live parts.

Grounding

20. The customer must be responsible for bonding and grounding all exposed, non-current-carrying metal parts. Grounding and bonding must be in accordance with NEC and local ordinances. PG&E prefers, but does not require, the grounding electrode conductor wire to be protected against physical damage by rigid steel conduit or armored cladding (see Pages 8 and 10 for additional details).

Pole Location

21. Poles must be located so that the vertical clearances specified in Note 9 and Figure 1 on Page 4 can be obtained. A service pole must not be located less than 10 feet from the surface of the PG&E pole, or pole-mounted equipment, or within 10 feet of the vertical plane of a PG&E line.

    PG&E must be consulted for maximum span lengths, as they can vary depending on wire type and size, loading area, clearances, and suitable guying. The maximum span length of PG&E's service drop to a temporary pole must not exceed 100 feet, and if 4/0 conductor is necessary, not more than 80 feet. The maximum span length for a permanent type installation may vary from 80 feet to 150 feet upward depending on the variables mentioned.

    The pole must also be positioned so that the pole brand will not be hidden by the main service switch, meter socket box, or conduit runs.

Guying or Bracing

22. Where conductors cross a street or road, the customer's pole must be guyed or braced against the pull of conductors as follows:

    A. Temporary Poles: Anchor guy as shown in Figure 13 on Page 12, or with wood braces not smaller than 2" x 4" timber and securely bolted to the pole as per Figure 14 on Page 12. See Figure 2 on Page 8 for the correct placement of guy or brace.

    B. Permanent Service Poles: Anchor guy only as shown in Figure 13 on Page 12. See Figure 5 on Page 10 for the correct placement of guy.

    C. The guy strain insulator is to be located in a zone: 8 feet or more above the ground; and 8 feet or more below the level of the lowest supply conductor, or 6 feet or more from the surface of the pole and 1 foot or more below the level of the lowest supply conductor.

Metering Requirements

23. Meters must be furnished by PG&E.

24. For residential installations, meter sockets without test bypass facilities must be furnished, installed, and wired by the customer as shown on Page 12.

25. For commercial and industrial applications, meter sockets with PG&E-approved test bypass facilities must be furnished, installed, and wired by the customer. Excepted from this test-bypass requirement are single-phase installations with a standard delivery voltage less than 300 V and a meter switch rating 200 amps or smaller where short interruptions of service are acceptable to the customer for testing and maintenance of the meter by PG&E. This configuration is limited to temporary power and exclusively nighttime loads such as parking lots, tennis courts, etc.

26. Customer–owned poles for residential use are limited to only one meter panel rated at 320 amps (continuous) or less. Poles for non–residential applications are limited to only one meter panel rated at 200 amps or less. More than one meter panel or a meter panel with a greater ampacity must be installed on panel board construction as shown in Document 065374.

Table 5 Materials to Be Furnished and Installed by the Customer

Item	Description
1	Pole, 6” x 6” Timber, Class 6 Round, or Equivalent Metal (length as required, see Note 2 on Page 1)
2	Pole, Wood, or Equivalent Metal (see Note 6, Note 7, and Note 8 on Page 2). (See Table 1 on Page 3 for approved list of wood pole suppliers.)
3	Meter Socket, Main Service Switch
4	Conduit, Service (see Note 14 on Page 5)
5	Conduit, Load Side (see Note 14 on Page 5)
6	Conduit Fitting, Threaded, With Cover and Gasket
7 [1]	Covering, PVC Conduit, or PVC Moulding (see Page 9)
8 [1]	Wood Block (4” x 4” x 6” or two 2” x 4” x 6” nailed together)
9	Service Head
10	Service Knob
11	Wire, Insulated (size as required) (18” minimum extension from service head)
12	Eyebolt, 5/8”, Length (as required), Galvanized
13	Washer, 2-1/4” Square for 5/8” Bolt Size, Galvanized
14	Padlock, for Main Service Switch
15	Guy Cable, 1/4” Minimum Galvanized Steel or Equivalent, With Guy Strain Insulator (10,000 lbs. minimum), Anchor and Fittings (see Page 12 for details of anchor and brace), and Guy Marker
16	Push Brace, 2” x 4” Minimum Timber (securely bolted to pole)
17	Grounding by Customer (see Pages 8 and 10)

[1] Omit conduit covering, Item 7, and wood block, Item 8, on a metal pole or on a wood pole with plastic conduit (see Note 15 on Page 5). **Exception**: The wood block is required for a wood pole with plastic conduit when the service head is metallic and the neutral service entrance conductor is uninsulated (see Note 15 on Page 5).

Table 6 Materials to Be Furnished and Installed by PG&E

Items	Description	Document
18	Meter, Watthour (as required)	–
19	Service Wire (as required)	059626
20	Insulator, for Service Wire (as required)	025202
21	Connectors, Service Sleeve (as required)	028852
22	Preformed Grip, Dead-End (as required)	028851
23	Rack, Extended	015187
24	Spool and Clevis	022439

Temporary Installations

Notes

1. Locate the guy in line with the service drop. The guy must be maintained taut.
2. Grounding and bonding, by the customer, must be in accordance with NEC and local ordinances, (see Note 20 on Page 5). The ground rod must be located no less than 12 inches from the pole surface.
3. Customer's equipment must not be installed in the climbing space or over the pole brand. See Note 20 on Page 5 for grounding requirements.
4. For customer-owned poles, span lengths are limited to 100 feet. The vertical separation between conductors in extended rack construction is 8 inches minimum.
5. If the poles are to be set in **firm** soil, use the setting depths from the "Firm Soil" column of Table 3 on Page 3. If the poles are to be set in rock, use the setting depths from "Rock" column of Table 3 on Page 3. If the poles are to be set in **soft** soil, the poles must be set deeper than the depths shown in Table 3. Consult the PG&E project coordinator for the other approved methods for **soft** soil.

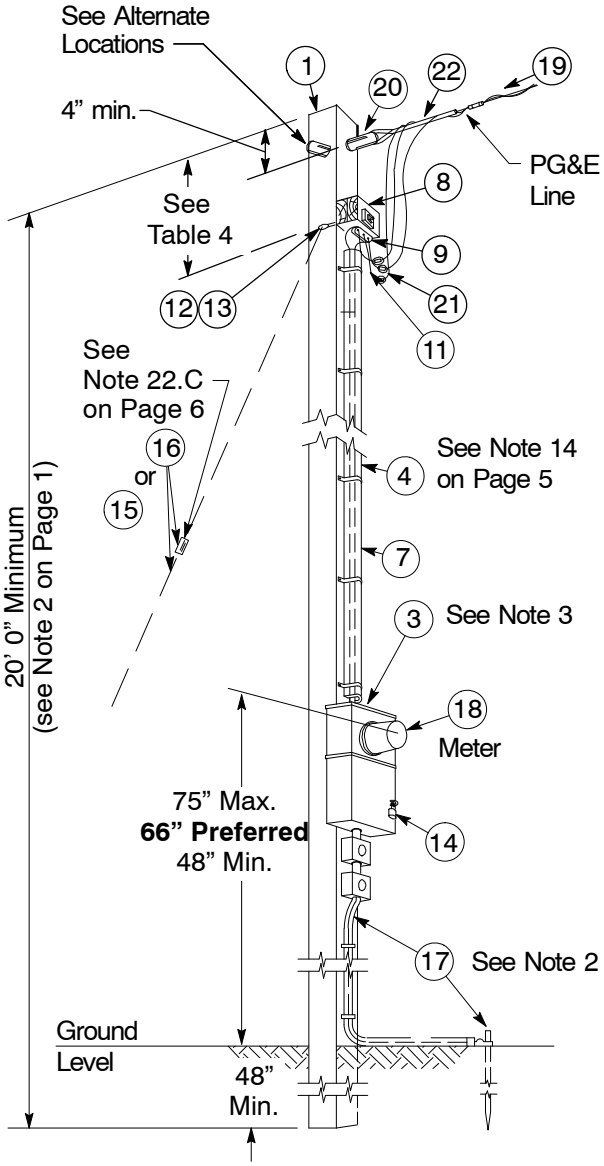

Figure 2
Service Drop Cable to Receptacles

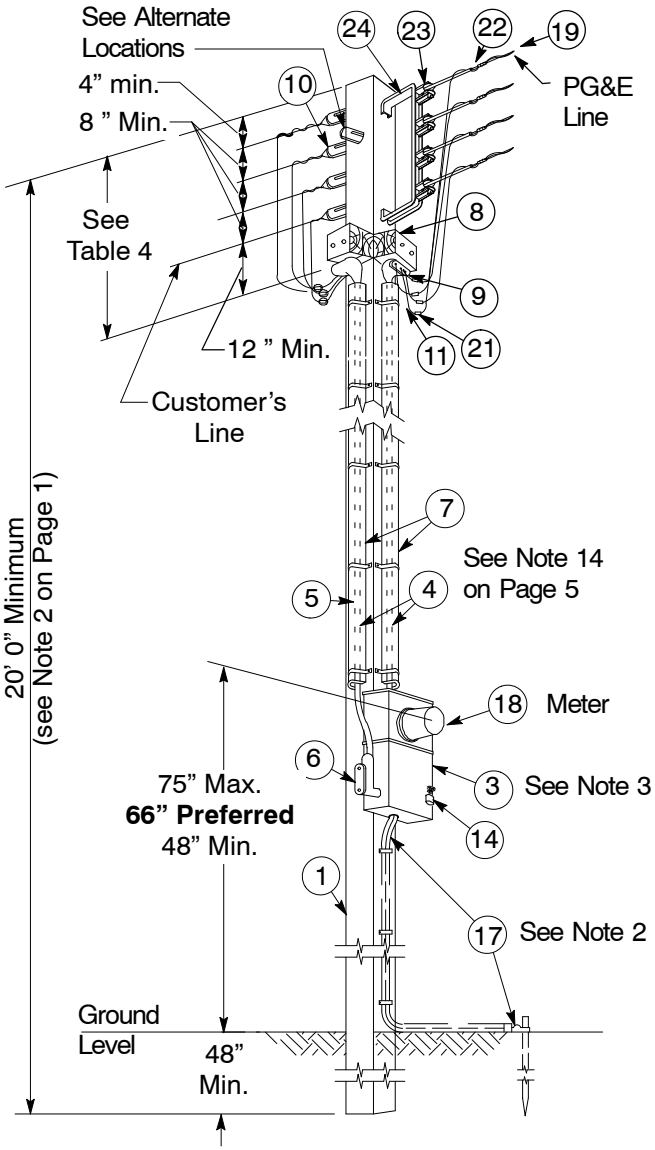

Figure 3
Service Drop Cable to Overhead Line

Temporary Installations (continued)

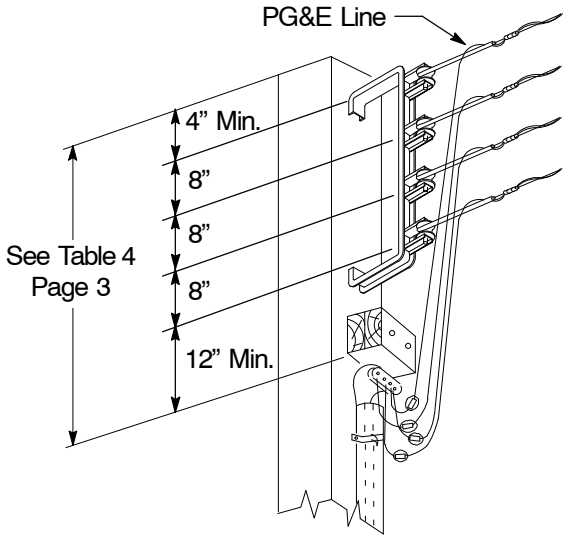

Figure 4
Open Wire Construction
(For use when the load requires a larger service drop conductor)

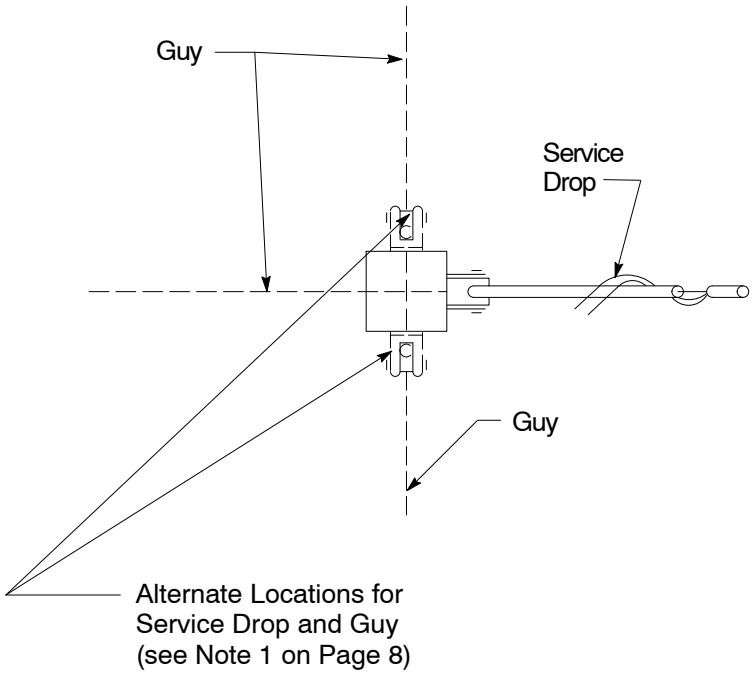

Detail A
See Figure 15 on Page 14

Permanent Installations

Notes

1. Locate the guy in line with the service drop. The guy must be maintained taut.
2. Grounding and bonding, by the customer, must be in accordance with NEC and local ordinances (see Note 20 on Page 5), The ground rod must be located no less than 12 inches from the pole surface.
3. Customer's equipment must not be installed in the climbing space or over the pole brand. See Note 20 on Page 5 for grounding requirements.
4. For customer-owned poles, span lengths are limited to 150 feet. The vertical separation between conductors in extended rack construction is 8 inches minimum.
5. If the poles are to be set in **firm** soil, use the setting depths from the "Firm Soil" column of Table 3 on Page 3. If the poles are to be set in rock, use the setting depths from "Rock" column of Table 3 on Page 3. If the poles are to be set in **soft** soil, the poles must be set deeper than the depths shown in Table 3. Consult the PG&E project coordinator for the other approved methods for **soft** soil.

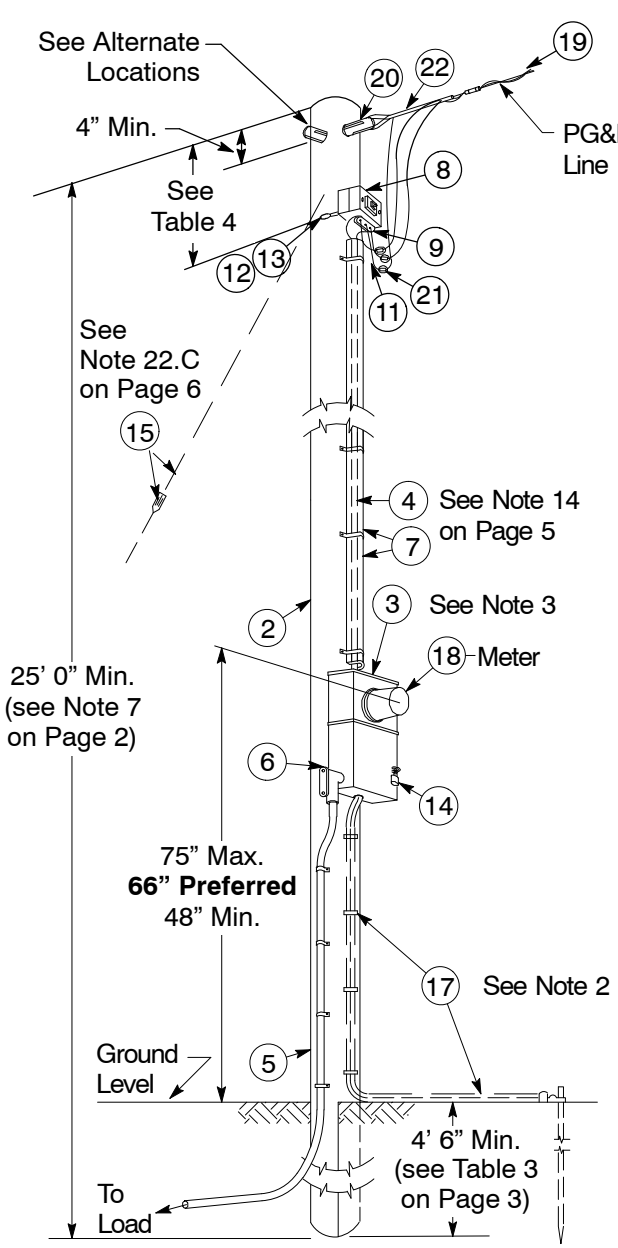

Figure 5
Service Drop Cable to Underground Line

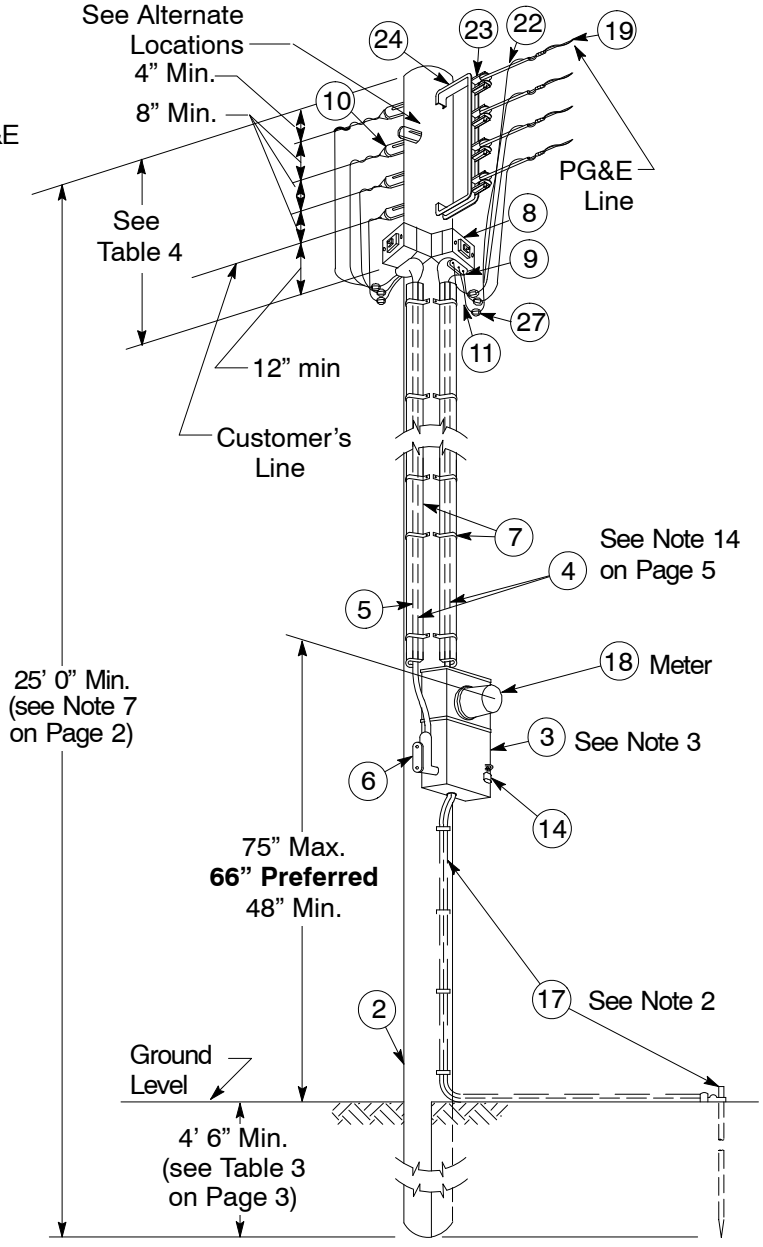

Figure 6
Service Drop Cable to Overhead Line

Permanent Installations (continued)

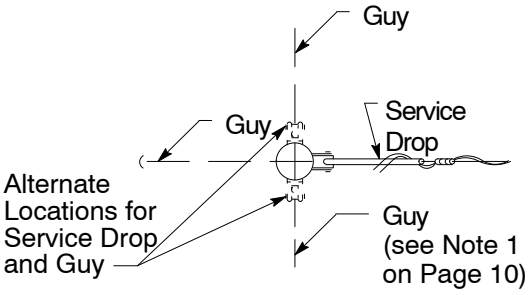

Detail B
See Figure 5 and Figure 6 on Page 10

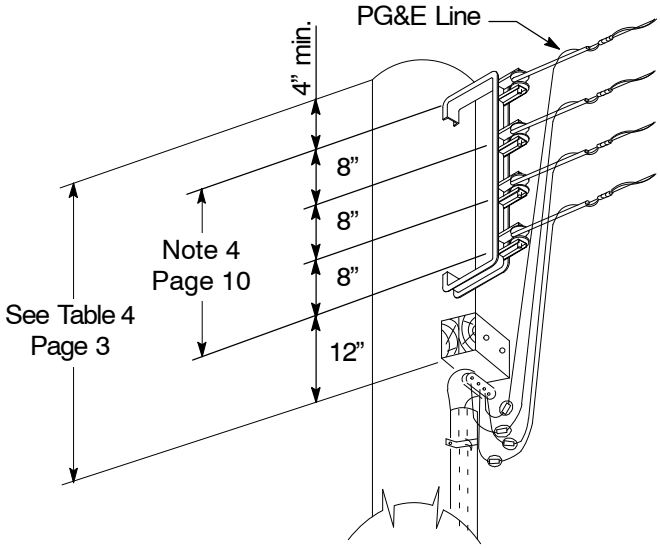

Figure 7
Open Wire Construction
(for use when the load requires a larger service drop conductor)

Method of Covering Metal Conduits and Attaching Coverings on Wood Poles

Notes

1. Strap PVC conduit to the pole with 2–hole heavy duty pipe straps or galvanized perforated plumber's tape spaced not more than 3 feet apart (see Figure 8).
2. Attach PVC molding to the poles with 1/4" x 2-1/2" galvanized washer-head lag screws.

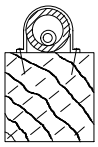

Figure 8
PVC Conduit
(see Note 1)

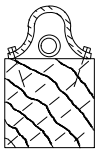

Figure 9
PVC Molding
(see Note 2)

Meter Connections

1. For test bypass facilities, see Note 25 on Page 6.
2. All wiring material on the load side of the meter socket must be in accordance with applicable electrical codes, city and county ordinances, and must comply with the California Building Standards Code – Electrical Regulations. Unless threaded connections are used, adequate bonding of all sections of the service equipment must be provided.

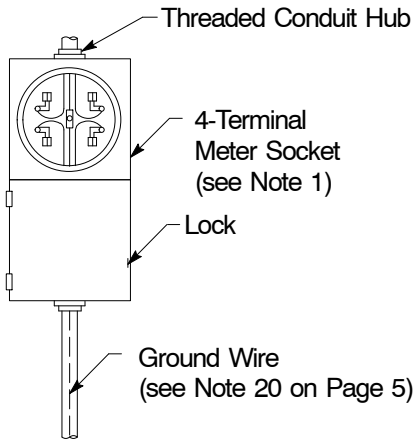

Figure 10
120/240 V, 3-Wire
With WHM, Service
Switch, and Receptacle in
Weatherproof Cabinet
(see Note 2)

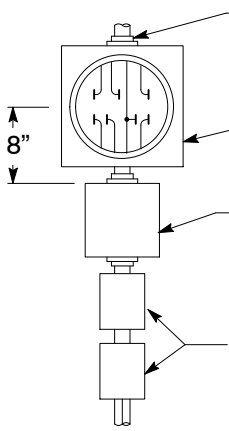

Figure 11
120/240 V, 4-Wire Delta
With Weatherproof Service
Switch and Receptacles
(see Note 2)

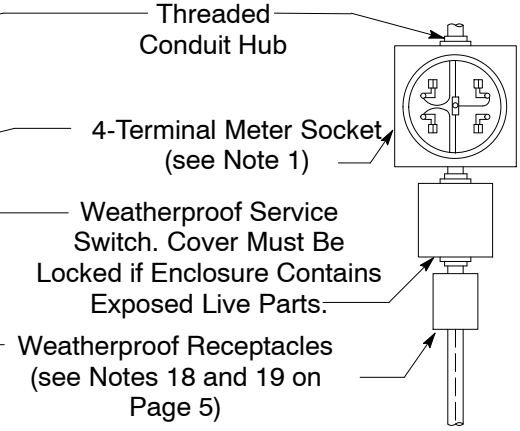

Figure 12
120 V, 2-Wire
With Weatherproof Service
Switch and Receptacles
(see Note 2)

Details of Anchors and Brace

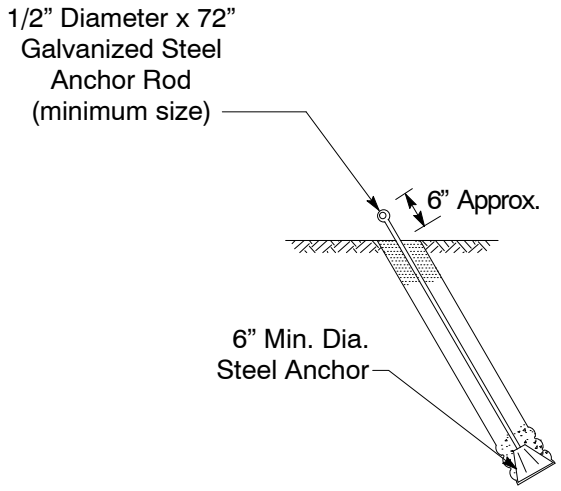

Figure 13
Steel Anchor

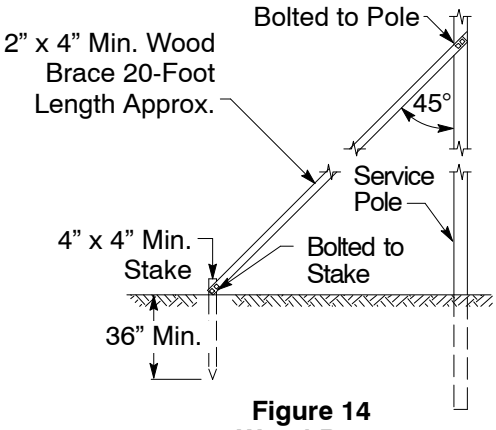

Figure 14
Wood Brace
(for use with temporary pole only)

Temporary Commercial Service to Non-Substantial Portable Structure

Notes

1. Temporary Service Attachment

   Temporary services will not be directly attached to any structure considered by PG&E to be of inadequate strength. The structure must, in all cases, be **substantial** (see Note 2) and capable of supporting the service span, as well as the force of the ladder and worker against the service mast.

2. Portable Buildings (Figure 15 on Page 14 and Figure 16 on Page 16)

   Portable buildings, such as small sheds, combined office/toilet structures, etc., are not considered to be **substantial** structures unless they are staked in place in the manner shown in Figure 16 on Page 16. Furthermore, periscopes must be installed and adequately braced in accordance with Figure 16 on Page 16 and the "Electric Service: Overhead" Section of the *Electric and Gas Service Requirements Manual* (Greenbook).

3. Temporary Poles (Figure 15 on Page 14)

   Customer-owned temporary poles are required for support of PG&E's overhead service wires if the temporary building to be served is considered by PG&E as **not substantial**.

4. Method of Serving

   Non-substantial structures that have been approved for the attachment of metering equipment and service periscopes may be served in the manner shown on Page 14. However, if desired, the metering equipment may be removed from the structure and placed on the temporary pole as shown in Figure 2 on Page 8.

5. The distance from the centerline of the periscope service mast to the pole face must not exceed 24 inches.
6. A portable structure must not obstruct the climbing space of a temporary pole.
7. The working space in front of the meter must not be obstructed.
8. The minimum distance from the surface of a PG&E pole to a customer's pole is 10 feet.
9. The maximum permitted span to a PG&E pole is 100 feet and may be only 80 feet in some cases (see Note 21 on Page 5).

Temporary Commercial Service to Non-Substantial Portable Structure (continued)

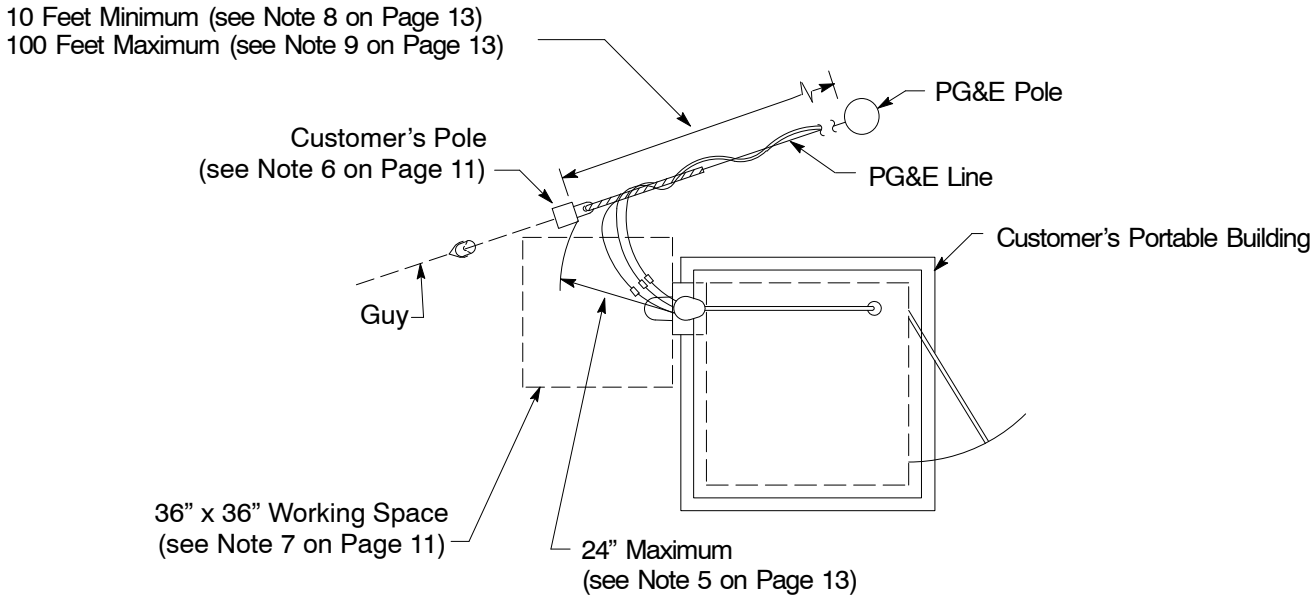

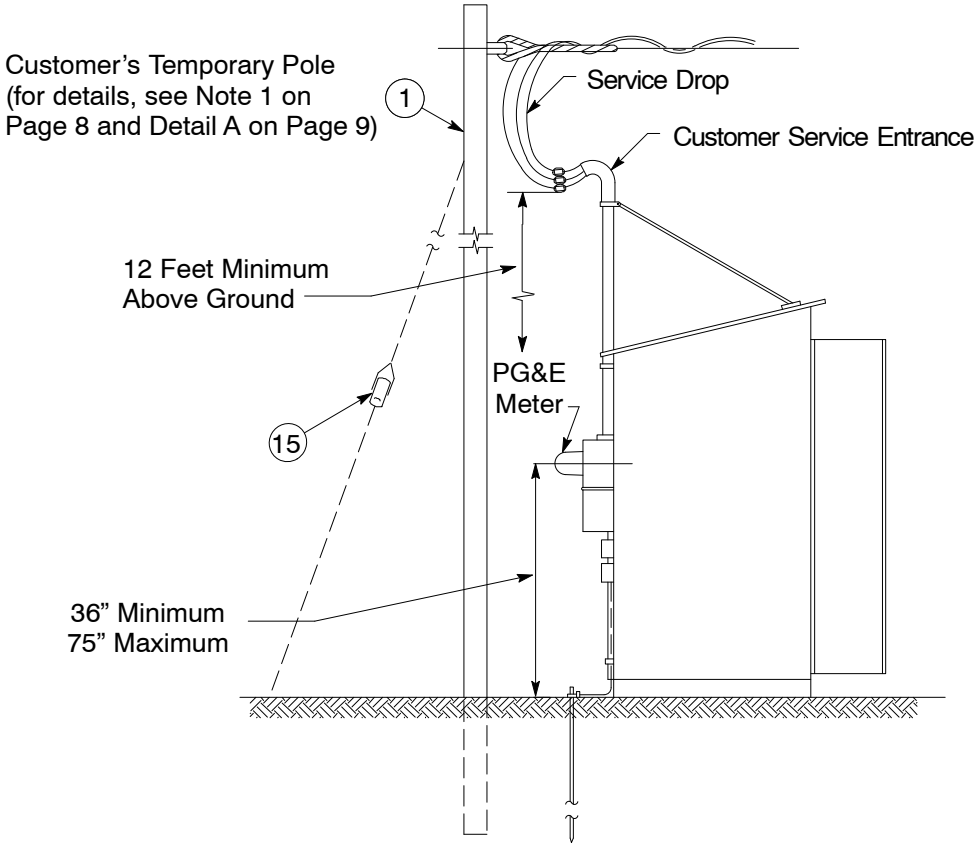

Figure 15
Portable Structure (non-substantial)
(see Note 2 on Page 11)

Temporary Commercial Service to Substantial Portable Structure

Notes

1. Substantial Building

   See Note 2 on Page 13 for an explanation of a “substantial” portable building.

2. Structure Anchoring

   To prevent overturning, the structure is required to be securely anchored in place using one of the following methods:

   A. Four 2” x 4” minimum wood stakes driven a minimum of 24 inches into the ground and attached to the framework of the structure using 1/4-inch minimum bolts or lag screws.

   B. Four steel stakes having strength equivalent to 3/4-inch rigid steel pipe driven a minimum of 24 inches into the ground and attached to the framework of the structure using 1/4-inch minimum bolts or lag screws.

   C. Four steel stakes having strength equivalent to a 3/4-inch rigid steel pipe driven a minimum of 24 inches into the ground with a cross member of each stake firmly contacting the upper surface of the timber used as a base or skid for the structure.

   Note: Methods 2A and 2B above describe the **preferred** methods of attaching the stakes to the structure framework. However, four 16d (8-gauge, 3-1/2-inch) common nails per stake may be used in lieu of the bolts or lag screws, providing the wood is in good enough condition to permit a secure attachment.

3. Periscope Mast Bracing

   Two galvanized steel braces, securely bolted or lagged to the structure’s framework with approximately a 90° spread, must be installed. Use 3/4-inch galvanized rigid steel pipe or 1-1/4” x 1-1/4” x 1/8” galvanized steel angle (minimum size).

4. Service Disconnection

   When initial service is disconnected, sufficient service drop cable should be left connected to the service entrance cable to permit the future splicing of service cable from the ground level. This practice will limit the need for placement of ladders against the periscope mast when the structure is moved to a new location.

5. The working space in front of the meter must not be obstructed.

6. For temporary underground commercial service to substantial portable structures, see Document 036670.

Temporary Commercial Service to Substantial Portable Structure (continued)

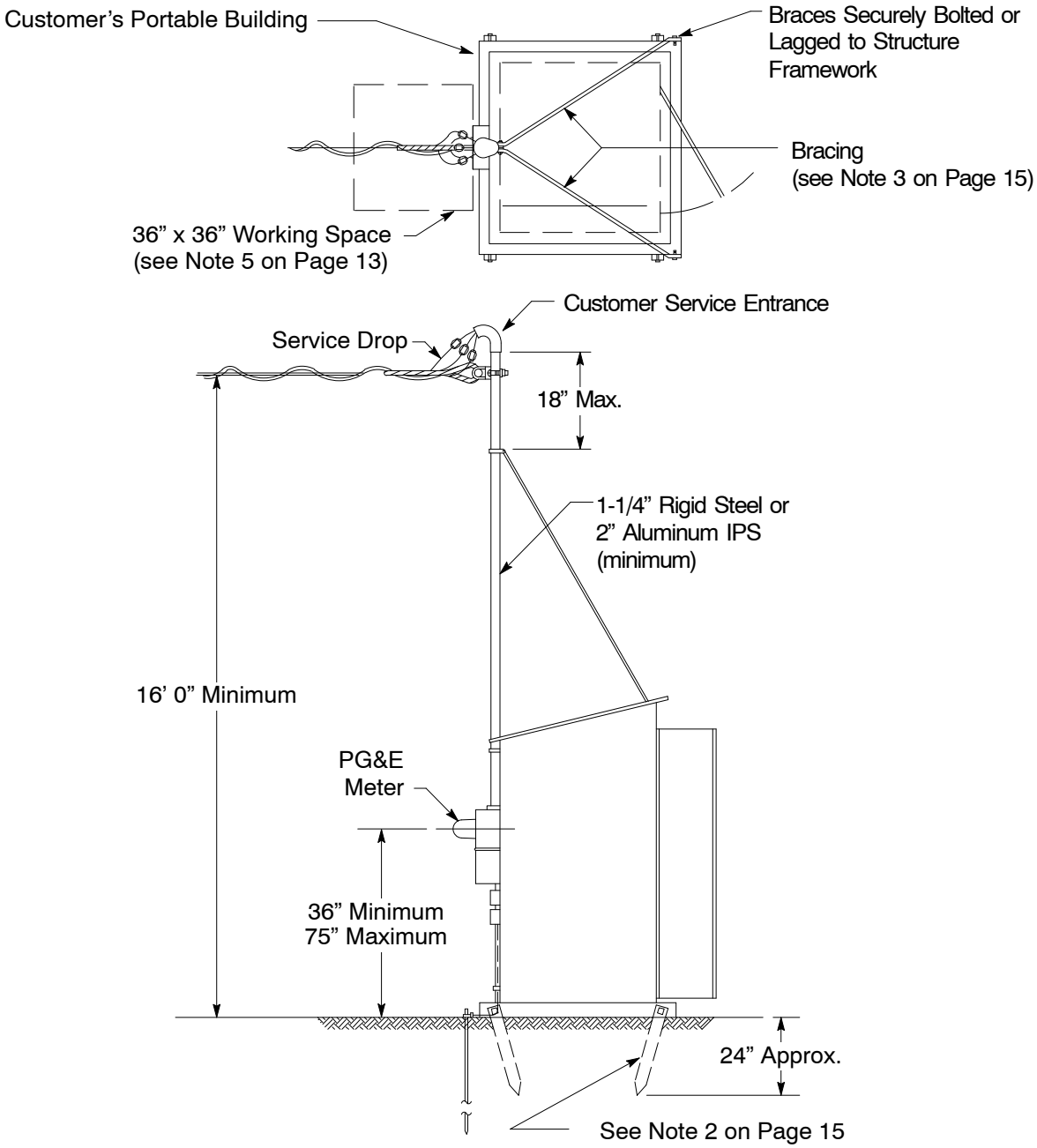

Figure 16
Portable Structure - Substantial
(see Note 2 on Page 13)

Revision Notes

Revision 15 has the following changes:

1. Added Note 7. I. on page 2.
2. Revised Table 1 on Page 3.
3. Revised Table 2 on Page 3.
4. Revised Note 1 on Page 11.
5. Revised Table 4 on Page 3.
6. Revised Table 5 on Page 7.
7. Revise Figure 4, Figure 5, Figure 6, Figure 7.

Prepared by: ABB1

SECONDARY ELECTRIC UNDERGROUND ENCLOSURES 028028

Asset Type:	Gas and Electric Distribution	**Function:**	Construction, Maintenance, and Operation
Issued by:	Lisseth Villareal (LDV2)	**Date:**	07-31-15

Rev. #18: This document replaces PG&E Document 028028, Rev. #17. For a description of the changes, see Page 15.

This document is also included in the following manual:

- *Electric and Gas Service Requirements Manual* (Greenbook)

Purpose and Scope

This document provides specifications, ordering information, illustrations, and application instructions for the various sizes of non-concrete and precast concrete enclosures used in electric underground secondary distribution.

General Information

1. The words boxes/enclosures have the same meaning and are used interchangeably.
2. The design loads for these subsurface enclosures are specified in Engineering Material Specification No. 51, "Non-Concrete Enclosures".
3. Requirements for non-concrete, non-deliberate vehicular traffic enclosures and covers:
   A. Non-concrete enclosures for incidental loading must meet the requirements of Engineering Material Specification No. 51, "Non-Concrete Enclosures."
   B. The cover and exposed portions of a enclosure shall be of a concrete color.
   C. Enclosures shall comply with this document concerning marking, security devices, and dimensions.
   D. Enclosure covers must have PG&E identification. The enclosure body and cover must be labeled with the manufacturer's name, enclosure weight, and have the PG&E code number on inside surfaces.
   E. The cover shall be made of polymer concrete and shall have a PG&E-approved high coefficient of friction (0.65 or better), slip-resistant surface.
   F. Non-concrete parts shall be interchangeable.
4. Requirements for concrete enclosures:
   A. Concrete enclosures for full-traffic must meet the requirements of the latest ASTM C-857.
   B. enclosures shall also comply with this document's requirements, such as marking, security devices, and dimensions.
   C. Concrete parts shall be interchangeable. Concrete joints shall be interchangeable with those shown in Figure 10 on Page 10, Figure 12 on Page 12, and Figure 14 on Page 14.
   D. Covers shall have a PG&E-approved high coefficient of friction (0.65 or better), slip-resistant surface.
   E. Enclosure covers must have PG&E identification. The enclosure body, cover, and extension must be labeled with the manufacturer's name, enclosure weight, and have the PG&E code number on inside surfaces.
5. Requirements for pedestals:
   A. Pedestals must meet the WUC Guide 3.6 sidewall deflection criteria with 600 pounds per square foot (psf) applied to the base per the WUC Guide 3.6 test protocol.
   B. Pedestal covers must withstand, without damage, 60 foot-pound impact test with a 2-1/2 inch diameter test tup dropped directly on top of the cover.
   C. Pedestals shall comply with this document's requirements, such as marking, security devices, and dimensions.
   D. The pedestal covers must have PG&E identification. The pedestal body and covers must be labeled with the manufacturer's name and shall be Muncell green in color.

Application

6. Consider the following when selecting enclosure/pedestal sizes:
   A. Secondary non-concrete enclosures are the preferred method of terminating 600 V conductors in residential, small commercial applications and in areas where heavy, non-deliberate vehicular traffic is expected. In flood plain areas that experience snowfall, secondary pedestals should be installed. Do not use secondary pedestals where wild grassland fires are prevalent. Concrete secondary enclosures should be installed in areas where full-vehicular traffic is expected.
   B. Ultimate predictable conductor size and number.
   C. Location of duct entrances, cable layout, and minimum bending radius of cables.
7. The 26” deep enclosures are required for installations of conductors larger than 4/0.
8. When setting concrete enclosures in place, use spacers to adjust the enclosure to grade. Install enclosures as level as practical, but do not exceed 1/8” per foot slope in any direction. Place grout in and around duct entrances. Do not pave over the enclosure cover.
9. Secondary enclosures shall not be used for primary cable.
10. Swedge reducers are necessary with conduit smaller than the terminators supplied (see Document 062288).
11. All conduits are to be stubbed a minimum of 2-inch from the pedestal or subsurface enclosure.
12. For new construction, conduit entry shall be as shown in Figure 4 on Page 5 for pedestals and Figure 8 and Figure 9 on Page 8 for splice boxes. Group conduits at one end of the box to achieve maximum cable length to avoid exceeding minimum cable bending radius.
13. When replacing an existing box or installing new conduits into an existing box, the conduits may enter through the terminals or knockouts. For conduits entering through the knockouts a transitioning to less than 24” of cover at the entrance of the box is allowed.
14. Conduits that do not terminate in a duct terminator or belled end must be fitted with an end bell.
15. Enclosures shall be set on a 6-inch gravel or 1/2-inch or less crushed rockbed.
16. See Document 066205 for replacement parts for older style installations.

References	Location	Document
Connectors for Insulated Cables Underground Distribution Systems	UG-1: Connectors/Greenbook	015251
Multi-Tap Splice for 600-Volt Insulated Cables	UG-1: Splices	036640
Straight and Tap Splice for 600 Volt Insulated Cable	UG-1: Splices	051034
Identification Plates for Subsurface Enclosures	UG-1: Marking	051768
Primary Electric Underground Equipment Enclosures	UG-1: Enclosures/Greenbook	062000
Underground Conduits	UG-1: Conduits/Greenbook	062288
Enclosure Repair/Replacement Criteria and Replacement Materials	UG-1: Enclosures	066205
PG&E Approved Manufacturers	TIL	066211
Engineering Material Specification No. 51, “Non-Concrete Enclosures”	TIL	EMS51

Table 1 Guide for Application of Splice Boxes and Pedestals in New Construction for Underground Secondary Using Multi-Tap Splices (see Document 036640) [1]

		Enclosure Size					Pedestal Size [2]	
Description	–	11-1/2”	13” x 24”	17” x 30”	24” x 36”	36”x60” [3]	10” x 14”	14” x 22”
4 Terminal	#6 Str. – 350kcmil	For Streetlight Applications Only (see Note 2 on Page 6)	For Service Runs and Non-Bus Bar Splices (4/0 max)	x [4]	–	–	x	–
6 Terminal	#6 Str. – 350 kcmil			x [4]	–	–	x	–
8 Terminal	#6 Str. – 350 kcmil			–	x [4]	–	–	x
4 Terminal	4/0 – 1,000 kcmil			–	x [4, 5]	x	–	x
6 Terminal	4/0 – 1,000 kcmil			–	x [4, 5]	x	–	x
6 Terminal	(4) #6 – 350, (2) 4/0 – 1,000 kcmil			–	x [4, 5]	x	–	x
8 Terminal	(4) #6 – 350, (4) 4/0 – 1,000 kcmil			–	x [4, 5]	x	–	x
8 Terminal (one-way configuration)	4/0 – 1,000 kcmil			–	–	x	–	–
8 Terminal (two-way configuration)	4/0 – 1,000 kcmil			–	–	x	–	–
8 Terminal (two-way configuration)	4/0 – 1,000 kcmil			–	–	x	–	–

1 For approved suppliers, see Document 066211.
2 For single-phase applications only.
3 If using splices, 36” x 60” enclosure can accommodate up to 14 runs (7 in and 7 out or combination) of 1,000 kcmil or smaller wires.
4 350 kcmil and larger conductor installations require a 26-inch deep non-concrete enclosure or a 12-inch extension with a concrete enclosure.
5 The maximum number of runs of 750 kcmil and 1,000 kcmil conductors will be limited to a total of 2 runs (1 in and 1 out or combination); otherwise a 36” x 60” enclosure is needed.

Installation of Enclosures in Special-Finish Sidewalks

Notes

1. Frequently the customer or city (or other public entity) installs special-finish sidewalks (brick, tile, terrazzo, etc.). When required with enclosures through 3' x 5', the enclosure and standard cover shall be installed 2-inch below the final grade, and the customer or city shall furnish and install the special-finish cover as illustrated in Figure 1 on Page 4
2. The requirements for this cover shall be as follows:
   A. No single section of cover shall exceed 125 pounds.
   B. Provisions for removal shall be provided.
   C. The special-finish cover shall be identified by the letter "E" to indicate the location of the PG&E splice enclosure.
   D. This type of enclosure shall not be installed in locations where vehicular traffic is expected.
   E. **Caution:** PG&E cover design allows for a maximum of 1/2-inch deflection under an 8,000-pound or 12,000-pound design load, depending on the specified cover.

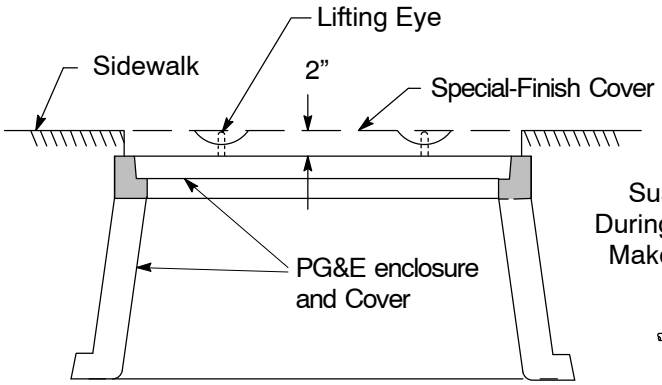

Figure 1
Installation of Enclosures in Special-Finish Sidewalks

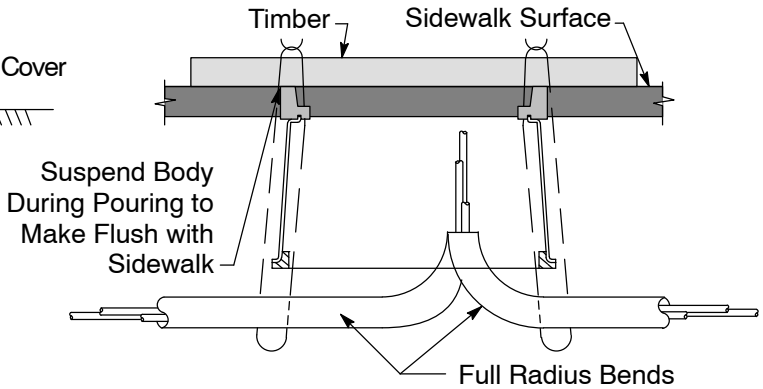

Figure 2
Installation of Non-Concrete Enclosures in Sidewalks

Secondary Pedestals

Notes

1. See Document 036640 for appropriate sized connector.
2. The 10” x 14” pedestal can be used for conductor combinations through 6-way, 350 kcmil.
3. The 14” x 22” pedestal can be used for conductor combinations through 8-way, #4 Str. – 1,000 kcmil; #4 Str – 350 kcmil.

Table 2 Dimensions and Codes for Secondary Pedestals

Type	A	B	C	D	E	F	G	Weight	Code
10” x 14”	14-1/2”	10-1/4”	24”	22”	18-5/8”	14-5/8”	2”	20 lbs.	360007
14” x 22”	22-1/2”	14-1/2”	24-1/2”	22”	25”	17-1/2”	2”	30 lbs.	360006

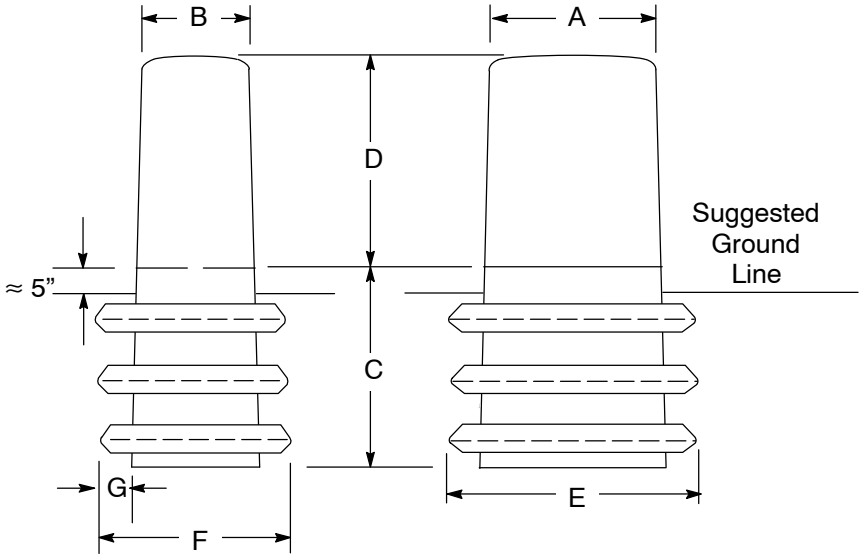

Figure 3
Dimensions of Secondary Pedestal Enclosure

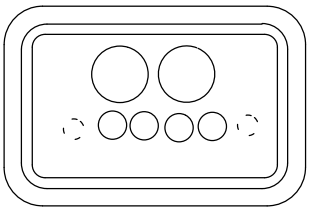

Figure 4
Preferred Location of Conduits Entering Pedestal

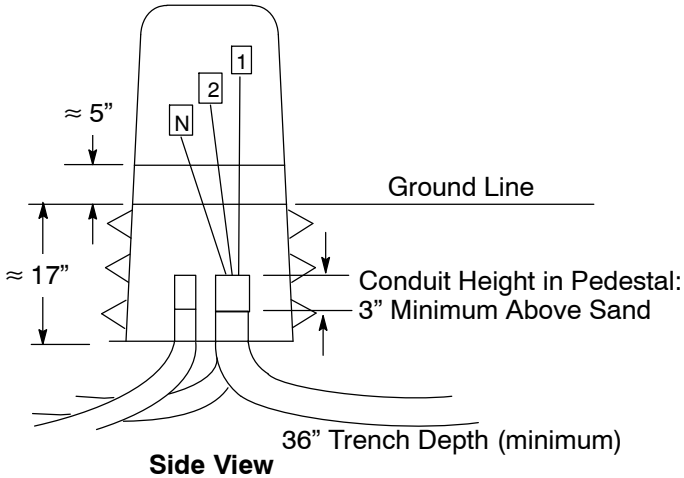

Figure 5
Secondary Pedestal Enclosure Installation

Streetlight Enclosure Assembly

Notes

1. In conduit systems, enter the bottom of the box with 90° sweeps.
2. Do not connect more than two streetlights per enclosure.
3. Three is the maximum number of conduits allowed.
4. For streetlight applications only (see Table 1 on Page 3).

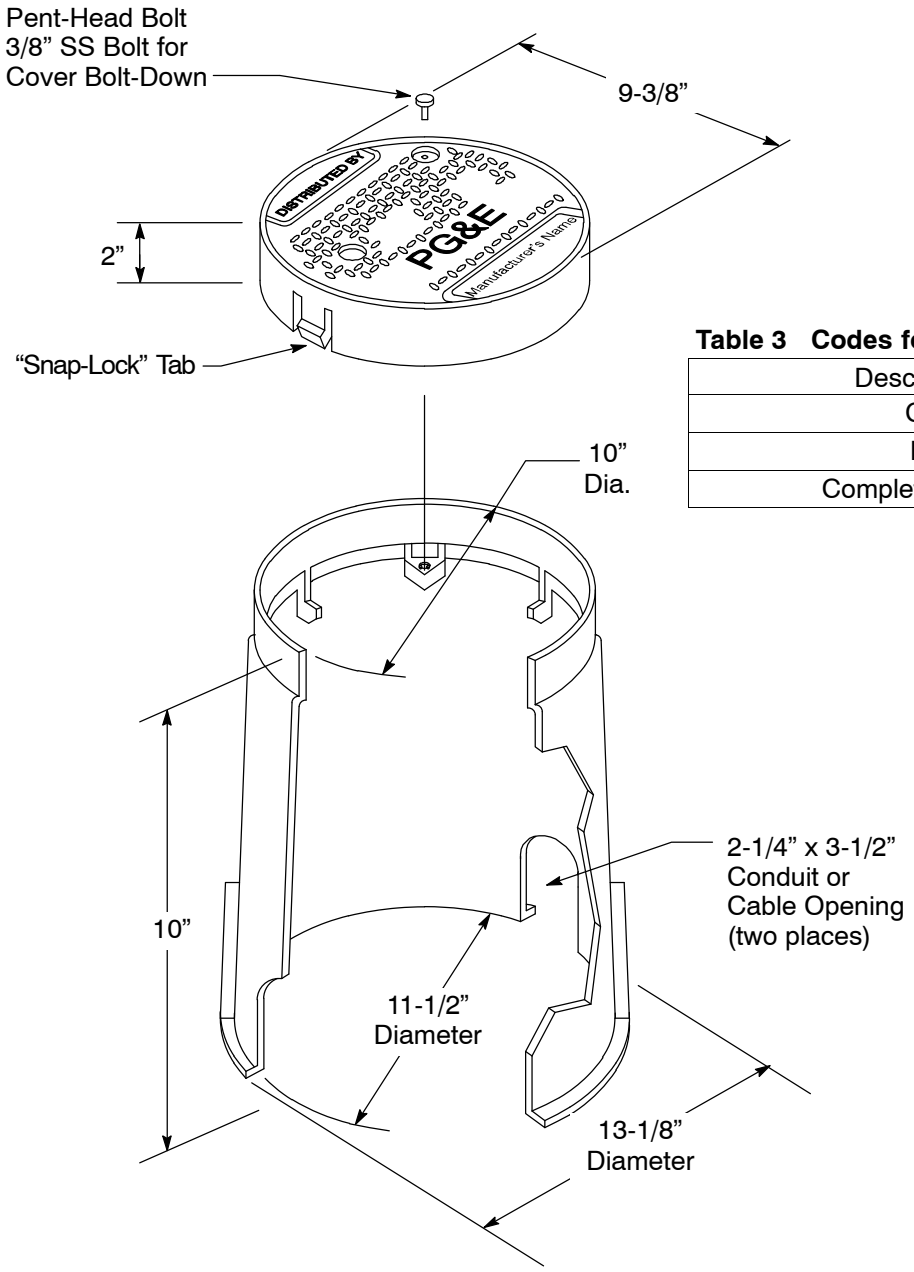

Table 3 Codes for Streetlight Box Components

Description	Code
Cover	032509
Body	032510
Complete Assembly	032511

Figure 6
Streetlight
Enclosure

Non-Concrete Enclosure for Incidental Traffic

Note

1. See Table 4 on Page 8 and Table 5 on Page 9 for box dimensions.

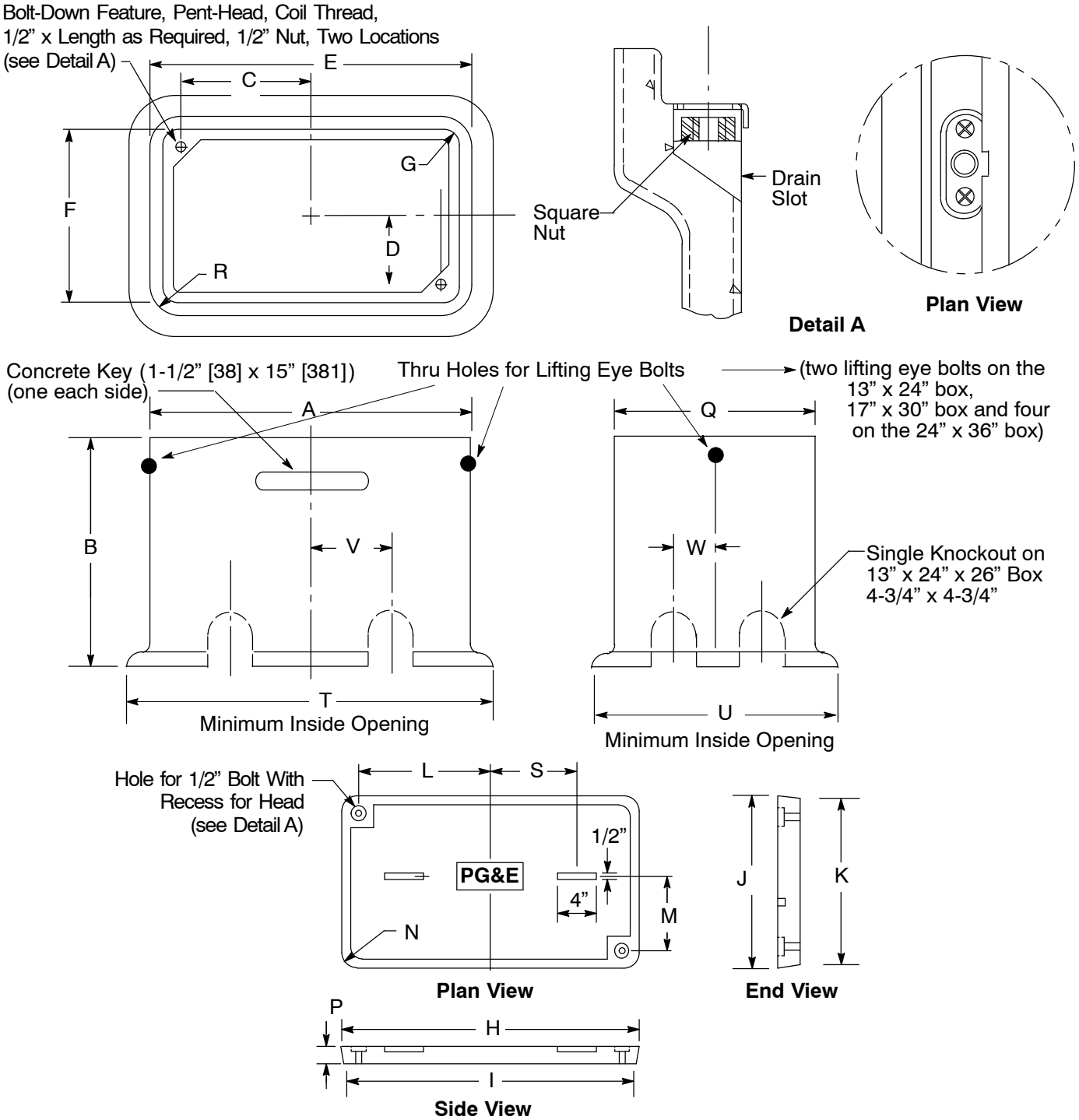

Figure 7
Cover

Non-Concrete Enclosures for Incidental Traffic (continued)

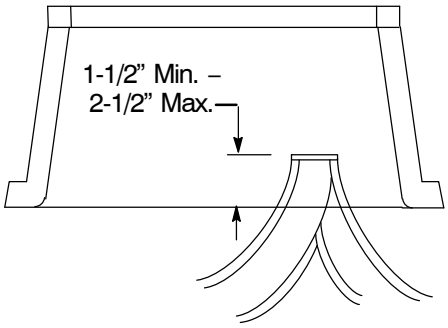

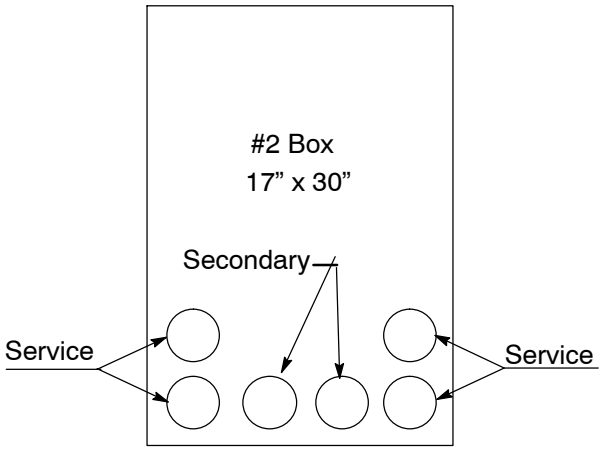

Top View

Figure 8
Location of Conduits Entering 17" x 30" Splice Box

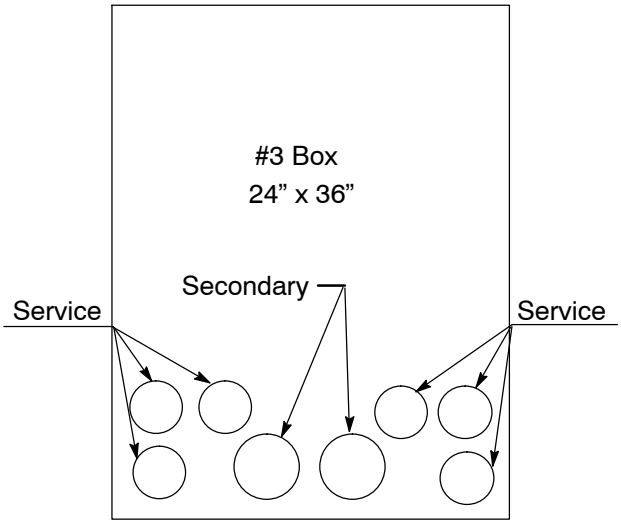

Top View

Figure 9
Location of Conduits Entering 24" x 36" Splice Box

Table 4 Codes for Enclosure Components and Assemblies

Enclosure		Description	Code
Size (inches)	Depth (inches)		
13 x 24	18	Body	040931
	18	Assembly [1]	040933
	26	Body	040920
	26	Assembly [1]	040935
	8,000 lb Cover		043716
	–		–
17 x 30 [2]	18	Body	040928
	18	Assembly [1]	040936
	26	Body	040929
	26	Assembly [1]	040937
	8,000 lb Cover		043720
	–		–
24 x 36	18	Body	040930
	18	Assembly [1]	040940
	26	Body	040919
	26	Assembly [1]	040942
	8,000 lb Cover		043724
	–		–
All	Pent-Head Bolt Coil Thread 1/2" x	2-1/2"	192853
		3-1/2"	017488
		4-1/2"	017489

[1] Includes cover and body.
[2] Only six conduits allowed in 17" x 30" boxes.

Non-Concrete Enclosures for Incidental Traffic (continued)

Table 5 Dimensions of Non-Concrete Enclosures

Enclosure Size (inches)	Dimensions (inches)									
	A	B	C	D	E	F	G	H	I	J
13 x 24 x 18	25-1/4	18	9-7/8	5-1/8	23-1/2	14	1-1/2	–	–	–
–	–	–	–	–	–	–	–	–	–	–
13 x 24 x 26	25-1/4	26	–	–	29-1/4	19-3/4	–	–	–	–
13 x 24 Cover	–	–	–	–	–	–	–	23-1/4	23	13-3/4
17 x 30 x 18	32-1/2	18	13-1/4	6-3/4	30-3/4	17-3/4	1-1/2	–	–	–
–	–	–	–	–	–	–	–	–	–	–
17 x 30 x 26	32-1/2	26	–	–	30-3/4	17-3/4	–	–	–	–
17 x 30 Cover	–	–	–	–	–	–	–	30-1/2	30-1/4	17-1/2
24 x 36 x 18	37-7/8	18	15-9/16	9-3/4	35-7/8	24-1/4	5-1/8	–	–	–
–	–	–	–	–	–	–	–	–	–	–
24 x 36 x 26	37-7/8	26	15-9/16	9-3/4	35-7/8	24-1/4	5-1/8	–	–	–
24 x 36 Cover	–	–	–	–	–	–	–	35-5/8	35-1/8	24
Enclosure Size (inches)	Dimensions (inches)									
	K	L	M	N	P	Q	R	S	T	U
13 x 24 x 18	–	–	–	–	–	15-3/4	4-5/8		24-7/8	15-3/8
–	–	–	–	–	–	–	–	–	–	–
13 x 24 x 26	–	–	–	–	–	15-3/4	4-1/2	–	25-3/16	15-5/8
13 x 24 Cover	13-1/2	9-7/8	5-1/8	1-3/8	2	–	–	8	–	–
17 x 30 x 18	–	–	–	–	–	19-1/2	4-5/8	–	32-1/8	19-1/8
–	–	–	–	–	–	–	–	–	–	–
17 x 30 x 26	–	–	–	–	–	19-1/2	4-1/2		32-3/8	19-3/8
17 x 30 Cover	17-1/4	13-1/4	6-3/4	1-3/8	2	–	–	9	–	–
24 x 36 x 18	–	–	–	–	–	26	6	–	37-1/4	25-5/8
–	–	–	–	–	–	–	–	–	–	–
24 x 36 x 26	–	–	–	–	–	26	6	–	37-9/16	25-15/16
24 x 36 Cover	23-1/2	15-9/16	9-3/4	5	3	–	–	11	–	–

Table 6 Knockout Dimensions from Center of Wall of Non-Concrete Enclosures

Enclosure Size	Dimensions (inches)		Number of Knockouts
	V	W	
13” x 24” x 26” [1]	7-1/2	0	6
17” x 30” x 26” [1]	10-1/2	5	8
24” x 36” x 26” [1]	11	5-1/2	8

[1] Knockouts in 26” deep enclosures only.

17” x 30” (#2) Concrete Enclosures for Full-Vehicular Traffic

Notes

1. Grade adjustment, when required, shall be made between the box and the extension or top section.
2. A base is not required.
3. All concrete parts shall be permanently identified as to the manufacturer on the inside surface. The weight shall be stenciled on the outside of all concrete parts.
4. All concrete parts shall be provided with four 7/8-inch diameter, 1-3/4-inch minimum deep inserts with UNC Class 2A threads.
5. Joints must be interchangeable with those shown in Detail B.
6. Install mastic sealant provided with enclosure assembly for all concrete-to-concrete joints below surface level.
7. The identification plate is to be welded to the frame by the manufacturer (see Document 051768 and Figure 10).

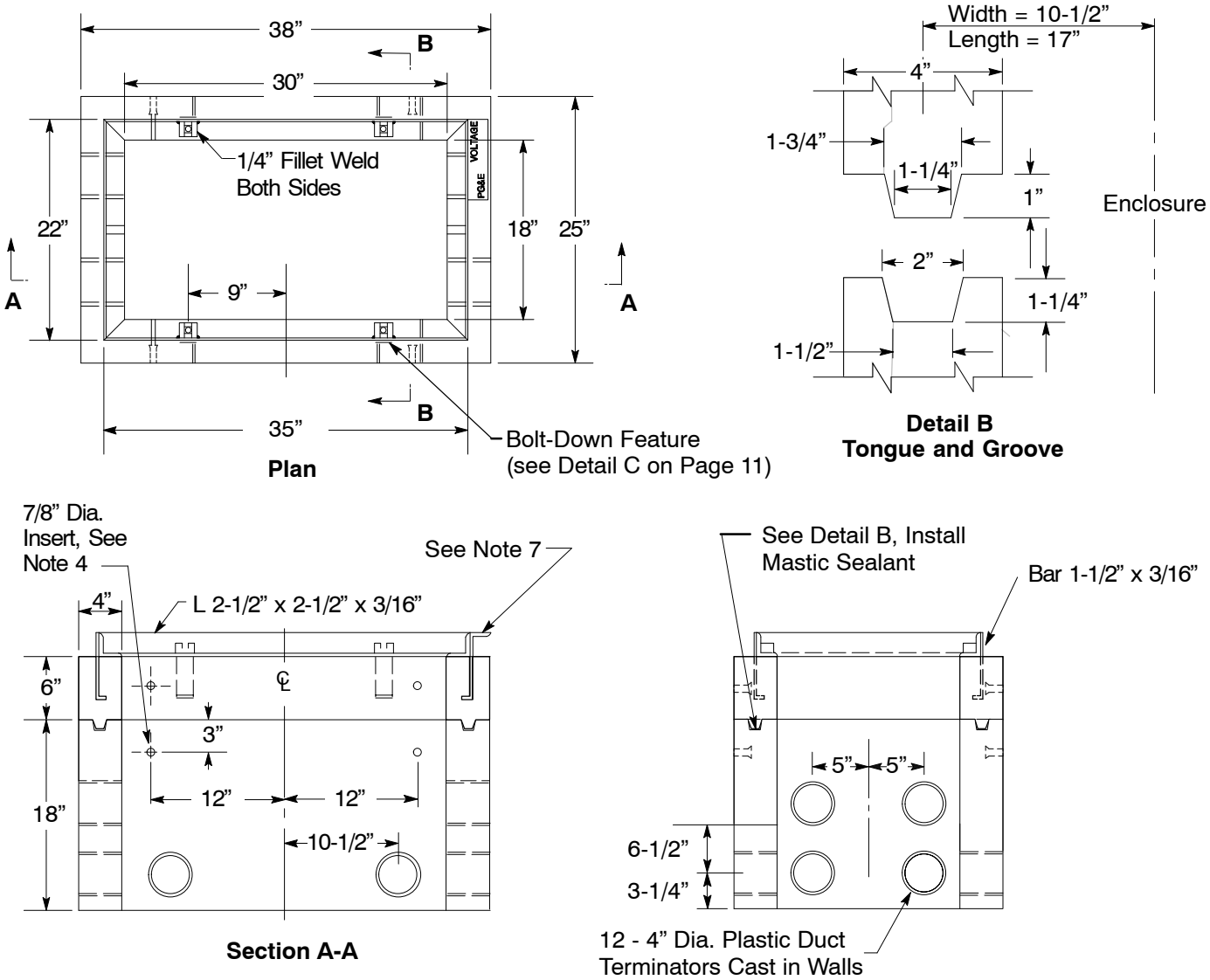

Figure 10
Concrete Enclosure

17” x 30” (#2) Concrete Boxes for Full-Vehicular Traffic (continued)

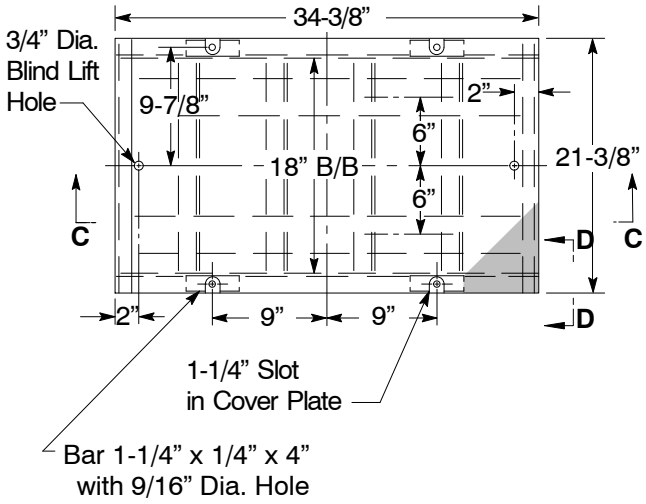

Cover

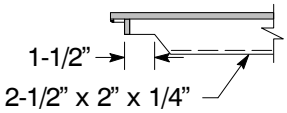

Section D-D

Table 7 Codes for Complete 17” x 30” Concrete Box Assemblies

Box		Code [1]
Type	Depth	
Full-Vehicular-Traffic With Slip-Resistant Cover	24”	019588
	30”	019597
Extension	6”	043517

[1] PG&E assembly code includes body with a 6” or 12” top section with cast-in frame and a cover. If more depth is required, order the 6” extension.

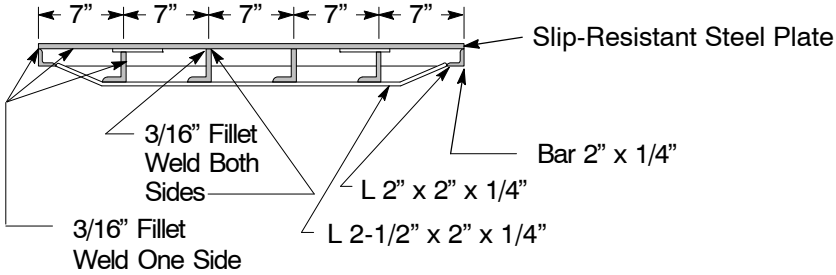

Section C-C

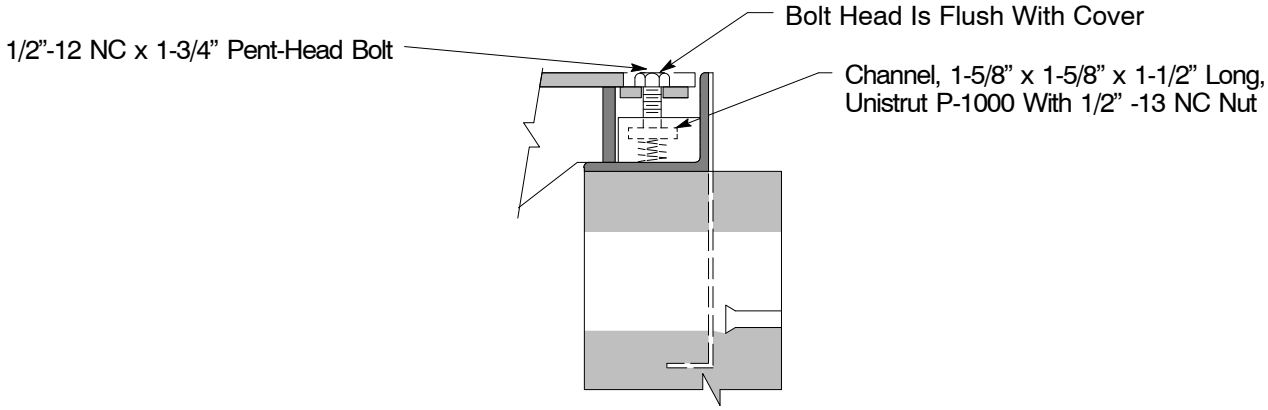

Detail C
Bolt-Down Feature

Figure 11
17” x 30” Cover

24” x 36” (#3) Concrete Boxes for Full-Vehicular Traffic

Notes

1. Grade adjustment, when required, shall be made between the box and the extension or top section.
2. A base is not required.
3. All concrete parts shall be permanently identified as to the manufacturer on the inside surface. The weight shall be stenciled on the outside of all concrete parts.
4. All concrete parts shall be provided with four 7/8-inch diameter, 1-3/4-inch minimum deep inserts with UNC Class 2A threads.
5. Joint must be interchangeable with those shown in Detail D.
6. Install masitic sealant provided with enclosure assembly for all concrete-to-concrete joints below surface level.
7. The identification plate is to be welded to the frame by the manufacturer (see Document 051768 and Figure 12).

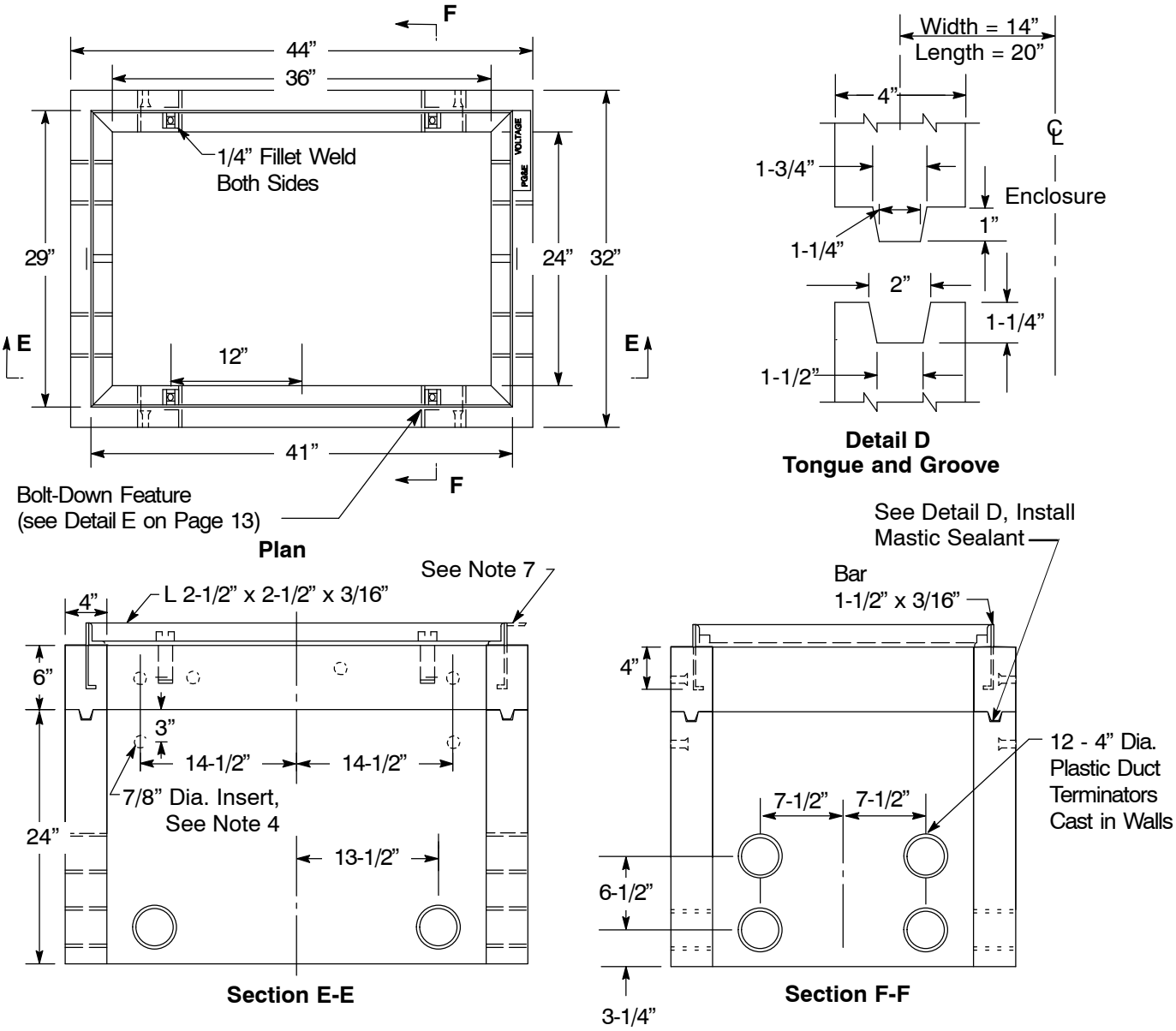

Figure 12
24” x 36” Concrete Box

24” x 36” (#3) Concrete Boxes for Full-Vehicular Traffic (continued)

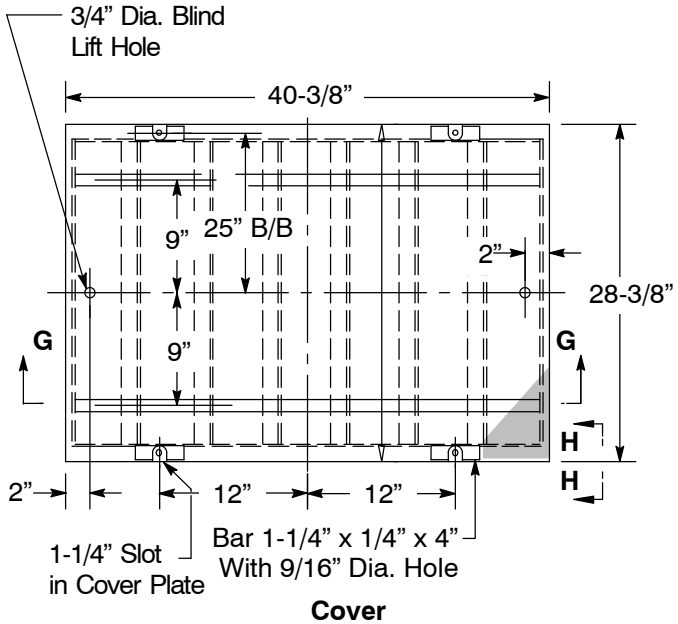

Cover

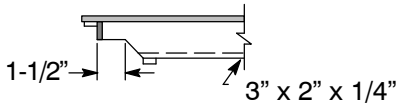

Section H-H

Table 8 Codes for Complete 24” x 36” Concrete Box Assemblies

Box		Code [1]
Type	Depth	
Full-Vehicular-Traffic With Slip-Resistant Cover	30”	019598
	36”	019599
Extension	6”	043521

[1] PG&E assembly code includes body, 6” or 12” top section with cast-in frame and cover. If more depth is required, order a 6” extension.

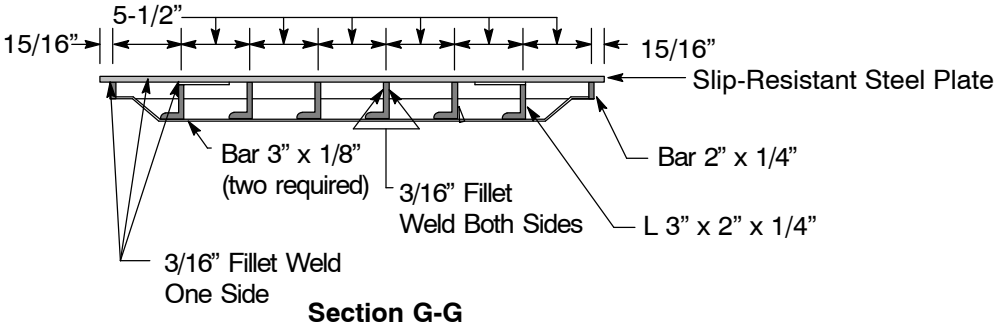

Section G-G

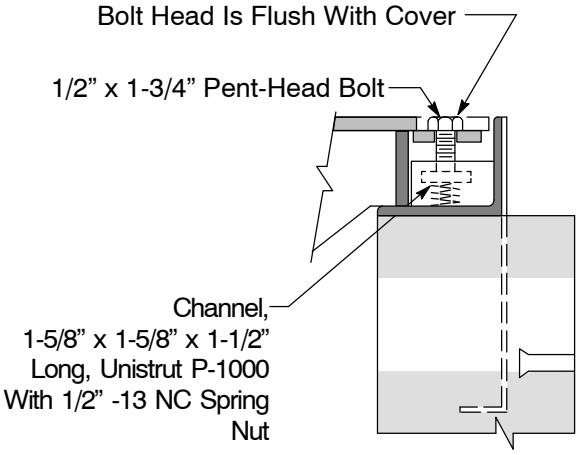

Detail E
Bolt-Down Feature

Figure 13
24” x 36” Steel Cover

36” x 60” (#5) Incidental- and Full-Vehicular Traffic Concrete Boxes

Notes

1. Joints must be interchangeable with those shown in Detail F.
2. Install mastic sealant included with the enclosure assembly for all concrete-to-concrete joints below surface level.
3. Pulling irons shall be designed for 20,000 pounds ultimate, with a safety factor of 2 (40,000 pounds).
4. Boxes shall be lifted using pulling irons in the floor.

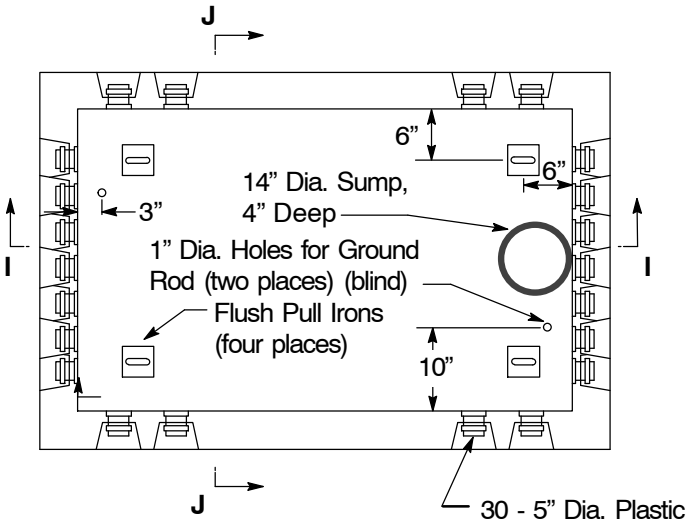

Plan View

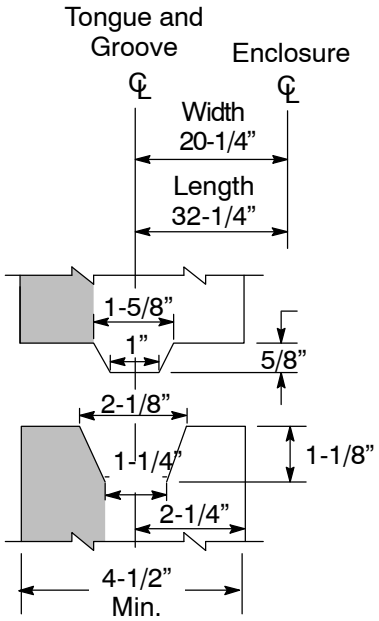

Detail F
Tongue and Groove

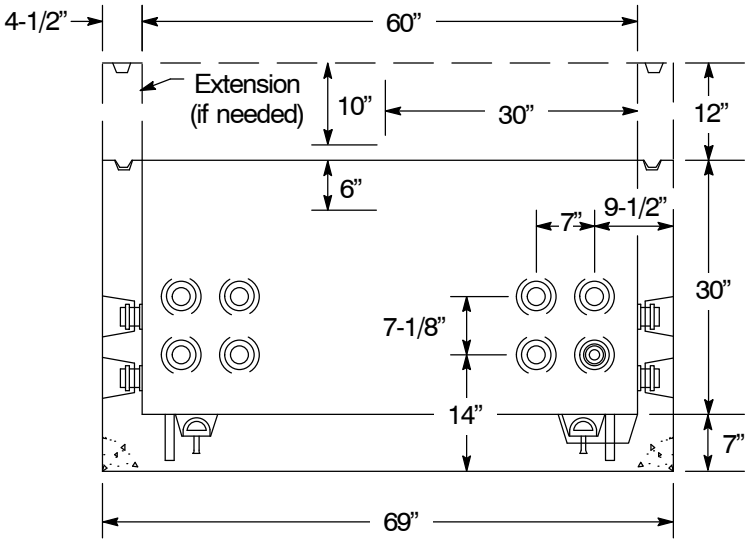

Section I-I

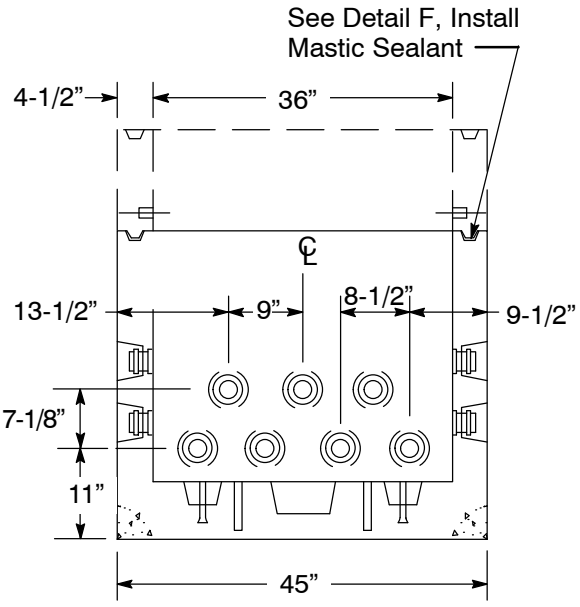

Section J-J

Figure 14
36” x 60” Concrete Box

36” x 60” (#5) Incidental- and Full-Traffic Concrete Boxes (continued)

Table 9 Codes for 36” x 60” Concrete Box

Box		Code
Type	Depth [1]	
Incidental-Traffic Assembly	30”	032506
Heavy Full-Traffic Assembly		032507 [2]
Body		032508

[1] When extra depth is required, order additional 12” extensions (see Document 062000).

[2] This code includes a 12” extension to accommodate the heavy full-traffic cover.

Revision Notes

Revision 18 has the following changes:

1. Revised document title.
2. Revised Purpose and Scope on Page 1.
3. Changed Note 1 on Page 1.
4. Revised Note 9 on Page 2.
5. Added Note 13 on Page 2.
6. Revised Table 1 on Page 3 to include newest multi-tap splice.
7. Added Note 6 and Note 7 on Page 10.
8. Added Notes 5, Note 6, and Note 7 on Page 12.

Prepared by: ABB1

TEMPORARY UNDERGROUND ELECTRIC SERVICE SINGLE-PHASE, 120/240 VOLT, 200 AMPS MAXIMUM

036670

Asset Type:	Electric Metering	**Function:**	Design and Construction
Issued by:	Quoc Hoang (QxH1)	**Date:**	07-31-15

Rev. #04: This document replaces PG&E Document 036670, Rev. #03. For a description of the changes, see Page 4.

This document is also included in the following manuals:

- *Gas and Electric Service Requirements (Greenbook)*
- *Electric Meter Work Practices*

Purpose and Scope

This document shows minimum requirements for a customer-installed wood post or portable structure for temporary installation of a single-phase 120/240 V 200-amp maximum underground electric service. PG&E cannot establish service to posts which do not meet these minimum requirements. The maintenance of customer-owned service posts in conformity with these requirements is the sole responsibility of the customer.

General Information

1. Local ordinances may include requirements in addition to those shown in this document. Consult local inspection authorities for these requirements. In areas where local ordinances require permits and inspection, these must be obtained before PG&E can establish service. Meters will be installed and energized by PG&E after the customer's metering equipment has been properly installed and after an inspection clearance has been given to PG&E by the appropriate electrical inspection authority.
2. Definition of a "temporary service:" Service for enterprises or activities which are limited to one year or less in duration.
3. If temporary overhead wires are to be extended from poles, the poles shall conform to requirements of G.O. 95, as shown in Document 025055.
4. Customer shall install conduit and cable as required by local codes.
5. The customer must contact the Underground Service Alert (USA) or PG&E to locate and mark underground facilities in the work area. Failure to do so can result in injury to personnel and/or costly damage to utility facilities.
6. When single-phase service larger than 200-amps or three-phase service is desired, consult PG&E.
7. Service Post Installation (see Page 3)
   - A The use of temporary service posts shall be restricted to installation of a temporary nature, such as building construction, temporary sales locations, etc. Temporary service posts shall be furnished and installed by the customer. If the temporary service is to be established at the permanent meter location, consult PG&E.
   - B Minimum dimensions of posts shall be 4" x 6" x 7' 0" long and depth of setting shall be 24 inches minimum.
   - C Post installations shall be in protected locations, out of the way of vehicular traffic or other hazardous conditions.
8. Service to Substantial Portable Structure (see Page 4)
   - A Portable buildings, such as small sheds, combined office/toilet structures, etc., are not considered to be substantial structures unless staked in place in the manner shown in Figure 3 on Page 4.
   - B Temporary underground service to a portable building will only be connected to a substantial portable structure. For definition of substantial portable structure and method of installation, see Figure 3 on Page 4, Note 8A on Page 1, and Note 1 on Page 4.

Temporary Underground Electric Service Single-Phase, 120/240 Volt, 200 Amps Maximum

9. Grounding

   The customer shall be responsible for bonding and grounding all exposed non-current-carrying metal parts. Grounding shall be in accordance with the National Electrical Code and local ordinances except that the grounding wire shall be protected against mechanical damage by rigid steel conduit or armored copper ground wire may be used (minimum #8 AWG copper). For installation, see Figure 1 on Page 3.

10. Service Trench

    The minimum conduit depth shown in Figure 1 on Page 3 and Figure 3 on Page 4, may be reduced from 24 inches to 18 inches for the length of the customer's service trench. However, in the vicinity of PG&E's splice box, the conduit depth must be 24 inches to assure proper entry into boxes' conduit knockout. Splice boxes without extensions do not require a 24-inch trench depth at the box location. Contact PG&E to determine if the splice box has an extension.

References	Location	Document
Requirements for Customer-Owned Poles	OH: Services	025055
Rules for Overhead Electric Line Construction	Technical Information Library	G.O. 95

Temporary Underground Electric Service Single-Phase, 120/240 Volt, 200 Amps Maximum

Service Post Installation

Notes

1. The customer's cables will be connected by PG&E. The customer is to contact PG&E when they are ready to extend the conduit and cable into the splice box. Customer runs adequately insulated unstripped cable into the splice box Customer's cables are to extend a minimum of 24 inches into the splice box.
2. PG&E secondary splice box is normally located adjacent to the sidewalk. Consult PG&E for exact location. If a splice box is not present, PG&E will install an appropriate splice box at the customer's expense.
3. Conduit is to enter the splice box through knockout positions only.
4. Meter height can be reduced to a minimum of 36" if the meter is enclosed or guarded by a hinged protective hood.

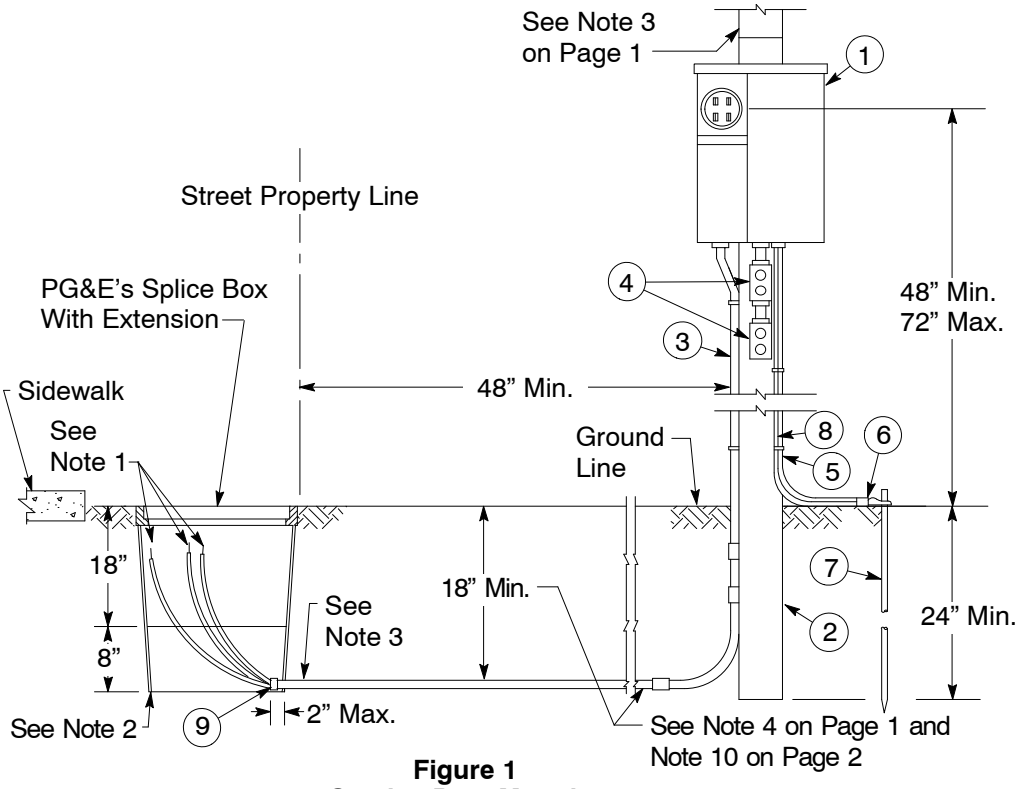

Figure 1
Service Post Metering
Preferred Installation

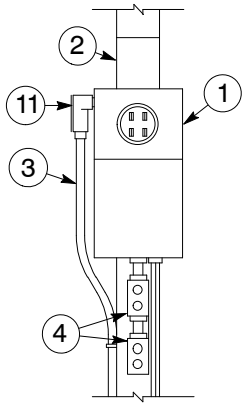

Figure 2
Alternate Metering
(overhead style enclosure)

Table 1 Materials to be Furnished and Installed by the Customer

Item	Description
1	Service Termination Enclosure, Combination Meter Socket Panel
2	Post, Minimum Dimension 4" x 6" x 7' 0" Long (see Note 7B on Page 1)
3	Conduit, Rigid Steel, Galvanized, or Schedule 80 Pvc 1-1/2" Minimum I.D. for #2 or 1/0 Aluminum Service Cable
4	Weatherproof Outlets
5	Conduit, Rigid Steel, Galvanized, With Pipe Strap (for bare ground wire, omit if armor clad wire used)
6	Hub and Clamp, Grounding, to Suit Item 5
7	Ground Rod (see Note 9 on Page 2)
8	Ground Wire, Copper, Bare or Armor Clad (size in accordance with applicable electrical codes and local requirements)
9	Conduit Bushing or Bell End (as required)
10	Service Termination Enclosure, 8" x 12" x 4", Rain-Tight, Circle AW No. R-9007A or Equivalent (see Note 2 on Page 4)
11	Conduit Fitting, Threaded With Cover and Gasket (size to suit Item 3)

Temporary Underground Electric
Service Single-Phase, 120/240 Volt, 200 Amps Maximum

Commercial Service to Substantial Portable Structure

Notes

1. Structure Anchoring: To prevent overturning, the structure is required to be securely anchored in place using one of the following methods:
   A. Four 2” x 4” minimum wood stakes driven a minimum of 24 inches into the ground and attached to the framework of the structure using 1/4-inch minimum bolts or lag screws.
   B. Four steel stakes having strength equivalent to 3/4-inch rigid steel pipe driven a minimum of 24 inches into the ground and attached to the framework of the structure using 1/4-inch minimum bolts or lag screws.
   C. Four steel stakes having strength equivalent to 3/4-inch rigid steel pipe driven a minimum of 24 inches into the ground with a cross member of each stake firmly contacting the upper surface of the timber used as a base or skid for the structure.
   D. Methods A and B described the *preferred* methods of attaching the stakes to the structure framework. However, four 16d (8 gauge 3-1/2”) common nails per stake may be used in lieu of the bolts or lag screws, providing the wood is in good enough condition to permit a secure attachment.
2. Item 10 may only be used if the service conductor is 1/0 AWG or smaller.

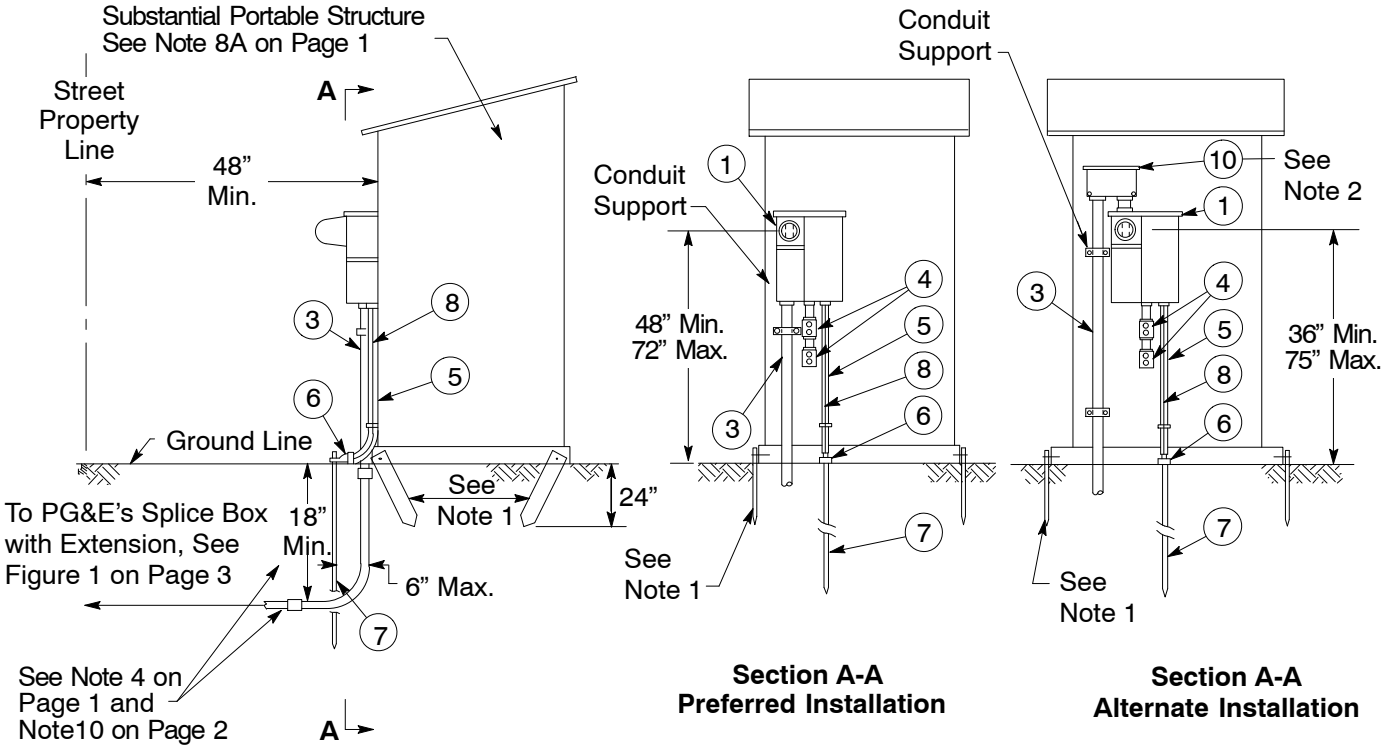

Figure 3
Portable Structure Metering

Revision Notes

Revision 04 has the following changes:

1. Revised 100 Amp to 200 Amp maximum.
2. Revised Note 1 on Page 3 :customer is to contact PG&E when they are ready to extend the conduit and cable into the splice box.

Prepared by: ABB1

MINIMUM REQUIREMENTS FOR THE DESIGN AND INSTALLATION OF CONDUIT AND INSULATED CABLE

038193

Asset Type: Electric Distribution **Function:** Design and Construction

Issued by: Lisseth Villareal (LDV2) **Date:** 07-01-16

Rev. #10: This document replaces PG&E Document 038193, Rev. #09 For a description of the changes, see Page 16.

Purpose and Scope

This document describes the minimum requirements for the design and installation of conduit and pulling insulated cables.

References	Location	Document
Installation of Three-Phase, 600-Amp, Subsurface Sectionalizing Switches	UG-1: Switches	050859
600-Amp Separable Insulated Connectors	UG-1: Terminations	051071
Utility Procedure TD-2951P–01, "Request for Variance Distribution Standards"	D2	TD-2951P-01

Duct System Design

There are many variables involved in designing underground duct systems and installing cables that are peculiar to each installation and cannot be covered in this guide. Some of these variables are listed below:

1. Physical requirements of the installation.
2. Limitations of available cable-pulling and reel-handling equipment.
   A. 1,000 pounds maximum for a single grip, 1,000 pounds maximum for two or more grips.
   B. 10,000 pounds maximum for reusable mechanical pulling eyes.
3. Number and radius of sweeps.
   A. Sidewall bearing pressure (1,000 pounds x radius).
4. Deflections, changes in direction, and obstructions encountered during conduit installation.
5. Coefficient of friction (COF) between cable and conduit surfaces.
6. Maximum allowable pulling tension for the cable size under consideration.

Conduit and Substructure Installation

Conduit and substructure installation must comply with the job design and construction documents. When deviation from the original design is required due to field conditions, the originating engineering department must be notified and will determine if the deviation will require additional substructures. Follow the variance request. See Utility Procedure TD-2951P-01.

It is preferred to install conduit around a bio swale. If is not feasible to go around the bio swale, primary and/or secondary conduits under the bio swale must be installed following the requirements below:

1. Option #1
   A. Install conduits with a minimum cover of 48" between the top of the conduit and the bottom of the bio swale.
   B. 6" sand bed below conduit
   C. Use Schedule 40 PVC, and install a spare conduit
   D. Install conduit 36" past bio swale on each side
   E. 6" sand bed on top of conduit

F. Complete trench fill with native dirt

2. Option #2 (if option #1 is not feasible)
   A. Install conduits with a minimum cover or 36” between the top of the conduit and the bottom of the bio swale.
   B. 6” sand bed below conduit
   C. Install Schedule 40 PVC, and install spare conduit
   D. Run conduit 3’ past bio swale on each side
   E. 6” sand bed on top of conduit
   F. 3” Red Slurry Cap
   G. Complete trench fill with native dirt
3. Option #3
   A. Use horizontal directional drilling (HDD) to install conduits crossing existing bio swales.
   B. The minimum depth burial for HDD is 48” for the bottom of the existing of the bottom of existing bio swale.

To minimize the possibility of cable damage during installation, these design parameters should be followed:

1. The total number of factory bends installed in conduit run for primary cable shall not exceed 300 degrees, including the bend at the feed-in location.
2. The total number of factory bends installed in conduit runs for secondary cable and services having a maximum length of 200 feet shall not exceed 315 degrees, including the bend at the feed in location. If the total length of conduit run exceeds 200 feet, then the total number of factory bends for secondary and service cable will be 300 degrees.
3. The maximum length of any **straight conduit run** (no bends) should not exceed 1,200 feet.
4. The calculated pulling tension for the non-preferred (highest) direction shall be used as the limiting pulling tension.
5. When the conduit run includes bends (300 degrees or less), the maximum length of the run shall be limited to 800 feet.
6. For secondary, services, and 200-Amp primary applications, the conduit run should not exceed 600 feet if there is a 90 degree bend within 10’ of both ends of the conduit run.
7. The first 18 inches of conduits leaving any primary underground enclosure should be straight with no factory bends.

To avoid potential burn-through of sweeps, use polyester pulling tape (Code 560154) as the “P-Line” to initiate cable pulling.

For each primary cable run, the construction drawing will contain:

1. The calculated pulling tension.
2. A preferred direction of pulling.
3. The maximum allowable pulling tension.
4. A place to record the actual pulling tension and direction of pull.

Pulling Line Rigging

The tension on the pulling line, as seen on the dynamometer, is dependent on the number of rollers and sheaves used to rig the pulling line and the angle between the line entering and leaving the device. Multiply the calculated pulling tension on the cable by 5% for each 90° bend of the rope.

The pulling equipment specified for a job should be capable of twice the calculated pulling tension. This is recommended due to the following variables:

A. Back tension.
B. Condition of the conduit.
C. Temperature of the conduit, cable, and the ambient air temperature.
D. Increase in friction due to rigging.
E. Static (start/stop) friction.

Combinations of the above could increase the actual pulling tension to twice (or more) of the calculated tension. Attention should be paid to minimizing these factors.

Cable Design

1. No more than one set of 600-Amp separable in any one enclosure is allowed in any one enclosure. One set means three 600-amp separable assemblies. Figure 1 below shows one 600-Amp separable assembly.
2. No more than three – 600-Amp elbows is allowed in any one 600-Amp separable.
3. No more than one set of 200-Amp taps (piggy-backed) off of a set of 600-Amp separable is allowed a 200-Amp tap from a 600-Amp separable must be made with a reducing tap plug (RTP) and a 200-Amp elbow receptacle, as shown in Document 051071, "600-Amp Separable Insulated Connectors". See Figure 1.

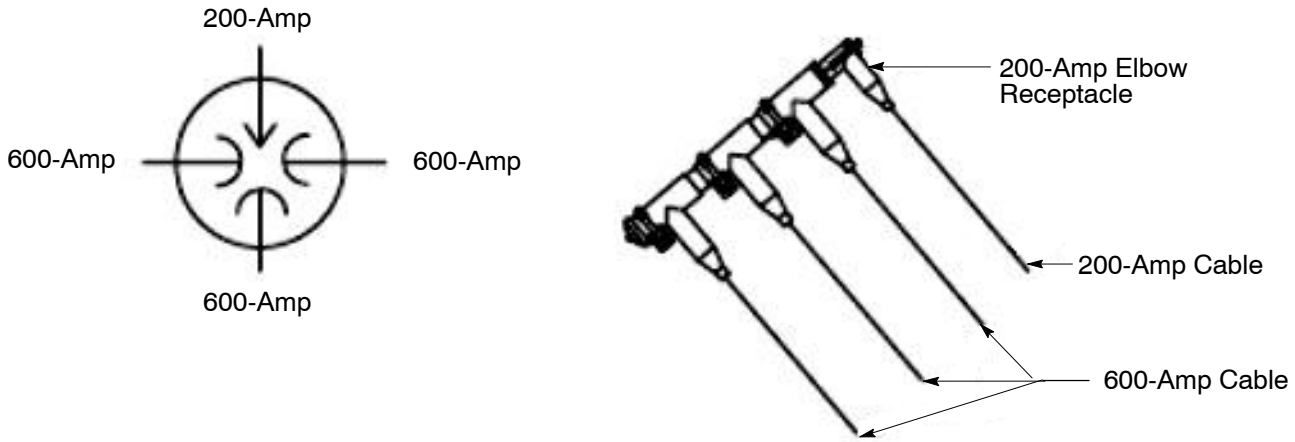

Figure 1
Allowed 600-Amp Separable Splice Assembly

4. No more than four-ways of cable on a 600-Amp subsurface switch is allowed.
   A. It is not allowed to tap off (piggy-back) 600-Amp elbows on top of the other 600-Amp elbows at any time on a switch bushing. See Note 8 under Cable and Equipment in Document 050859.
   B. Subsurface switch bushings that are rated at 600-Amps may be converted to 200-Amps by using a bushing extension and a 600/200-Amp tap/plug.
   C. 200-Amp taps that utilize 600-Amp bushing extensions are not considered piggy-back.
   D. SCADA installation on 600-Amp subsurface switch is exempt from requirement 2.4. However, whenever possible install SCADA on 600-Amp subsurface switches with no 200-Amp tap (piggy-backed).
5. No more than four-ways of cable on a 200-Amp pad-mounted or subsurface junction is allowed.
   A. A way is a conduit run from point A to point B. It can be one, two or up to three cables.
6. It is not permissible to use 1/0 cable adapters with 600-Amp separable connectors to make a 200-Amp tap. See Figure 2 on Page 4. Material code for the 1/0 cable adapters is still active to be used for replacement of existing facility only.

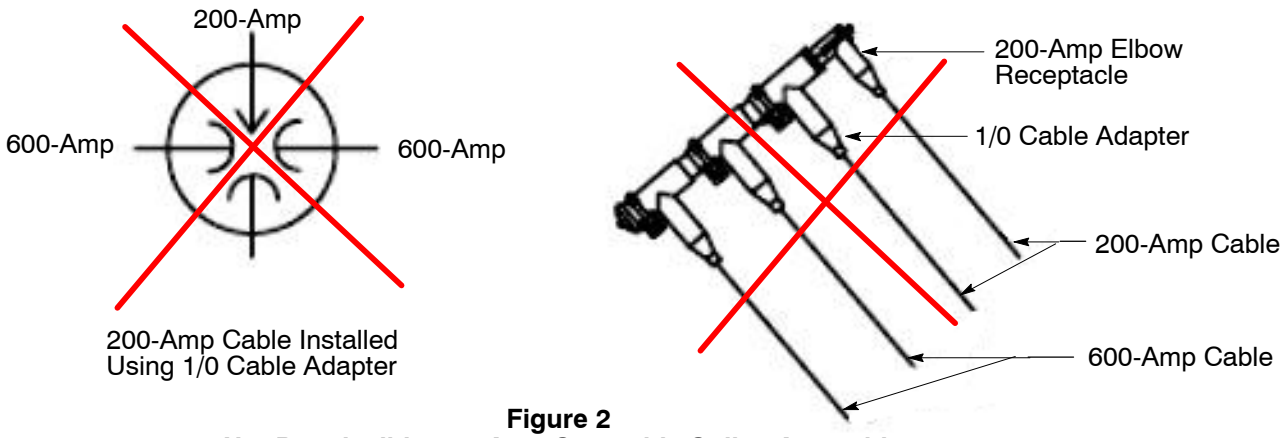

Figure 2
Not Permissible 600-Amp Separable Splice Assembly

7. When necessary, use one of the following two options to establish additional 200-Amp tap from existing mainline cables that already has 600-Amp separable with one existing 200-Amp tap.

   A. Install a pad-mounted switch, such as I-9 or equivalent. This installation is preferred. See Figure 3.

   B. Replace the 600-Amp separable splices with 600-Amp 3-Way Switch, 2-Way Switched subsurface switch. This installation will allow for establishing two 200-Amp taps using 200-Amp elbows. One 200-Amp tap will be from the dedicated 200-Amp switched side and the second 200-Amp tap can be made from the top of the 600-Amp elbows on one of the two 600-Amp positions. See Figure 6 on Page 5.

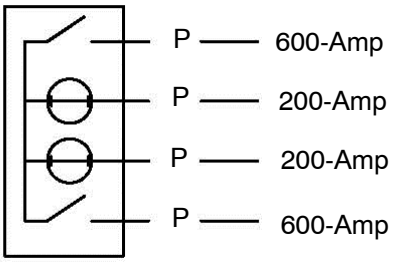

Figure 3
Pad-Mounted I-9 Interrupter
(Switch-Interrupter-Interrupter-Switch)

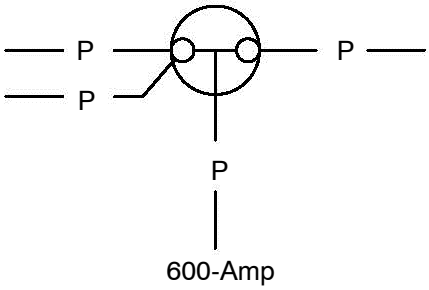

Figure 4
600-Amp 3-Way Switch, 2-Ways
Switched Subsurface Switch

8. Locate the protection devices as close as possible to the mainline tap when designing 200-Amp taps off the mainline tap. See examples in Figures 5, Figure 6, and Figure 7.

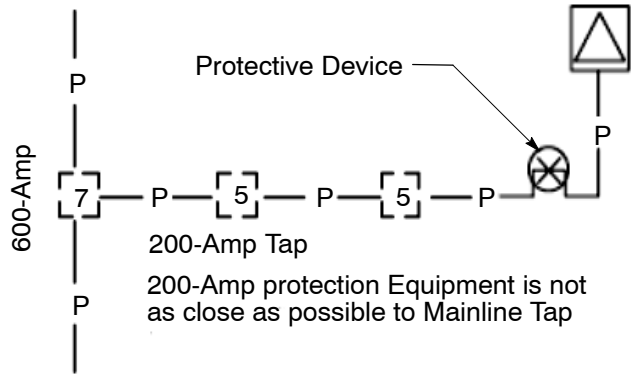

Figure 5
Bad Design

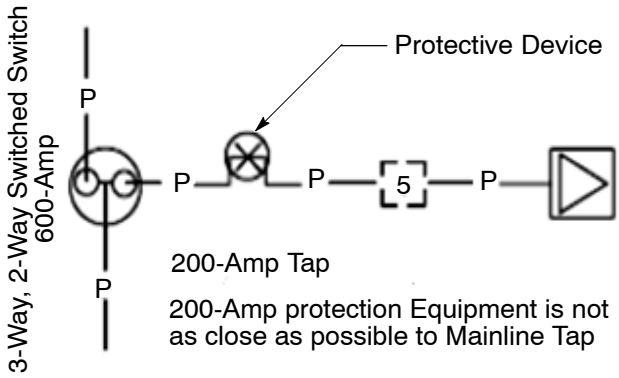

Figure 6
Better Design

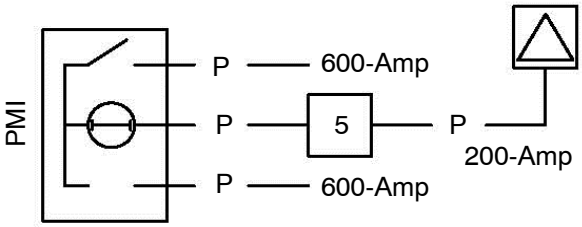

Preferred Option

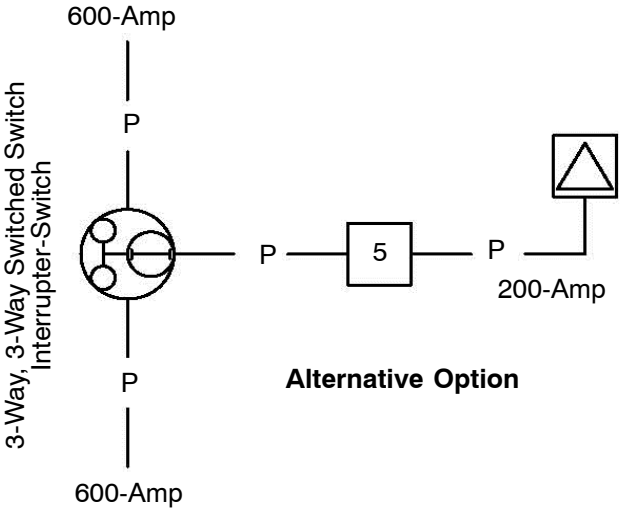

Alternative Option

Figure 7
Best Design

Cable Installation

1. Cable manufacturers' warranties require the use of approved pulling practices and equipment.
2. Before starting any cable installation or removal operation, all employees must be thoroughly familiar with the safe operation of the equipment and methods to be used.
3. Provide a reliable means of communications between feed-in and pull-out locations before and during the entire operation.
4. Provide an adequate number of employees to safely install or remove the cable.
5. The conduit shall be cleared of dirt, rocks, or other debris before starting the cable installation.
6. The practice of attaching the pulling rope to a vehicle and then driving the vehicle to pull in or remove cable may damage the cable and is prohibited.
7. All cable shall be lubricated (pre-lubed) before installing (see Table 4 and Table 5 on Page 7).
8. The use of a dynamometer or inline tensiometer to monitor the pulling tension during cable installation is **recommended** for cable pulls where the calculated pulling tension is less than 50% of the maximum allowable pulling tension for the cable being installed.

9. The use of a dynamometer or inline tensiometer to monitor the pulling tension during cable installation is **required** for cable pulls where the calculated pulling tension is equal to or greater than 50% of the maximum allowable pulling tension for the cable being pulled.
10. All locations where the actual pulling tensions exceed the calculated tensions by more than 25% must be reported to the originating engineering department and analyzed to determine the cause of the difference. The information will be used to improve the design parameters as well as PG&E's cable-pulling practices.
11. The minimum radius bend that an insulated cable can be subjected to cannot exceed the results of the OD of the cable times the multiplier shown in Table 1 on Page 6.

Table 1 Minimum Allowable Cable-Bending Radius Multiplier

Type of Cable	Multiplier
P&L or PL&N	10
15 and 22 kV XLP-PVC	12
5–35 kV CONC-PVC, LLDPE Encap, or EPR-CONC-PE	8
600 V XLP and EPR&N	5 (500 kcmil and larger)
	4 (less than 500 kcmil)

12. The recommended amount of cable lubricant depends only on the size and length of the conduit system.

    The appropriate quantity for use on any given pull can vary from this recommendation depending on the complexity of the pull. Consider the following factors:

    A. Cable weight and jacket hardness (increase quantity for stiff, heavy cable).
    B. Conduit type and condition (increase quantity for old, dirty, or rough conduits).
    C. Conduit fill (increase quantity for conduit fills of 50% or greater).
    D. Number of bends (increase quantity for pulls with several bends).
    E. Pulling environment (increase quantity for high temperatures).
13. Front-end packs are conduit-sized polyethylene bags of lubricant. The packs are attached to the winch line, ahead of the cable, and are manually opened as they enter the conduit, pre-lubing the conduit. Codes for front-end packs are in listed Table 2.

Table 2 Pulling Lubricant

Description	Code
Front-End Pack 2" and 3" Conduit	500118
Front-End Pack 4", 5", and 6" Conduit	500117
Pourable Lubricant, 2.5-Gallon Container	500031
Pourable Lubricant, 5-Gallon Container	500099

14. Cable lubricant LZ type must be used when 500 kcmil and 750 kcmil Cu 15kV EPR flat strap with low smoke zero halogen (LSZH) jacketed cable is pulled through conduits. For more information regarding LSZH cable refer to Document 039955.
    Note: The use of standard pulling lubricant will have a negative impact on the physical integrity of the cable's LSZH jacket.

Table 3 Pulling Lubricant to be Used With LSZH Cable

Description	Code [1]
Lubricant, Squeezable Quart	500060

[1] 12 quarts is the minimum order quality.

15. Table 4 and Table 5 on Page 7 indicate the approximate amount of pulling lubricant for various cable pulls. Same tables apply for the lubricant LZ type.

Table 4 Pulling Lubricant Needed for 2”, 3”, and 4” Conduit

Pull Length (feet)	2” Conduit			3” Conduit			4” Conduit		
	Gallons Needed	Number of Front-End Packs	Pourable (gallons)	Gallons Needed	Number of Front-End Packs	Pourable (gallons)	Gallons Needed	Number of Front-End Packs	Pourable (gallons)
100	0.25	1	0	0.50	2	0	0.50	1	0
200	0.50	2	0	1.00	2	0.50	1.00	2	0
300	1.00	2	0.50	1.25	2	0.75	2.00	2	1.00
400	1.25	2	0.75	1.75	2	1.25	2.50	2	1.50
500	1.50	2	1.00	2.25	3	1.50	3.00	2	2.00
600	1.75	3	1.00	2.75	3	2.00	3.50	3	2.00
700	2.00	4	1.00	3.25	4	2.25	4.00	4	2.00
800	2.50	4	1.50	3.50	4	2.50	5.00	4	3.00
900	2.75	4	1.75	4.00	4	3.00	5.50	4	3.50
1,000	3.00	4	2.00	4.50	4	3.50	6.00	4	4.00

Table 5 Pulling Lubricant Needed for 5” and 6” Conduit

Pull Length (feet)	5” Conduit			6” Conduit		
	Gallons Needed	Number of Front-End Packs	Pourable (gallons)	Gallons Needed	Number of Front-End Packs	Pourable (gallons)
100	1.00	2	0	1.00	2	0
200	1.50	3	0	2.00	2	1.00
300	2.50	2	1.50	2.50	3	1.00
400	3.00	2	2.00	3.50	3	2.00
500	4.00	2	3.00	4.50	3	3.00
600	4.50	3	3.00	5.50	4	3.50
700	5.50	4	3.50	6.50	4	4.50
800	6.00	4	4.00	7.00	4	5.00
900	7.00	4	5.00	8.00	6	5.00
1,000	7.50	5	5.00	9.00	6	6.00

Formulas and Parameters

Notes

1. The formulas and parameters used in this document are widely used in the utility industry. The parameters that must be checked are: **Conduit Fill, Cable Configuration, Minimum Bending Radius, Cable Jamming Potential, Cable Clearance, Maximum Pulling Tension, and Sidewall Bearing Pressure Limits.**

2. Cable Jamming

   Jamming is a condition that may occur if the sum of the cable diameters is about equal to the inside diameter of the conduit. It will typically occur at bends when one cable is forced between the other two cables and wedges them against the inner wall of the conduit. Jam ratios between 2.8 to 3.1 should be avoided to prevent the possibility of the cables jamming at a sweep. Use the formula given below to calculate jam ratio.

3. Jam Ratio Formula

   J = 1.05 D/d

   Where:
   J = Jam ratio
   D = Conduit inside diameter (inches)
   d = Cable nominal diameter (inches), one cable

   Check the probability of jamming using the formula: J = 1.05 D/d
   1.05*J = (p) probability of jamming

   - If the value J is less than 2.5, jamming is unlikely to occur.
   - If the value J is Between 2.6 and 3.1, jamming is very possible.
   - If the value J is greater than 3.1, jamming is unlikely to occur.

   The 1.05 factor is to account for the oval shape of the bends in the section view.

4. Coefficient of Friction

   A coefficient of friction value of 0.30 is recommended for lubricated PVC or PE conduits.

5. Minimum Bending Radius

   The multipliers for determining the minimum cable bending radius for commonly used cables are listed in Table 1 on Page 6.

6. Percent Conduit Fill

   Conduit fill is the percentage of area inside the conduit taken up by the cable(s).

   A. The recommended maximum percentage of conduit fill is shown in Table 6 on Page 14.

   B. For new construction, the conduit is usually sized for the next-larger size of cable.

Formulas and Parameters (continue)

Table 6 Recommended Maximum Conduit Fill

Number of Cables	Example	Percent of Total Internal Area of Conduit to Be Filled by Cable
1	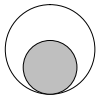	60
2		40
3	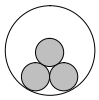	55
4	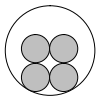	55

Table 7 Percent Fill for Common Cable/Conduit (DB 120) Combinations

	Type of Cable	2”	3”	4”	5”	6”
600 V	1/0 Triplex	15%	7%	–	–	–
	4/0 Triplex	24%	11%	–	–	–
	350 kcmil Triplex	–	18%	11%	–	–
	750 kcmil Triplex	–	32% [1]	19%	13%	9%
	1,000 kcmil Triplex	–	–	25%	17%	–
	1/0 Quadruplex	20%	9%	–	–	–
	4/0 Quadruplex	–	15%	9%	–	–
	350 kcmil Quadruplex	–	24%	15%	10%	–
	750 kcmil Quadruplex	–	–	27%	18%	13%
	1,000 kcmil Quadruplex	–	–	35%	24%	16%
15 kV	3-#2 AWG, Cu-EPR	–	21%	13%	–	–
	3-350 kcmil, Cu-EPR	–	–	26%	17%	12%
	3-500 kcmil, Cu-EPR	–	–	31%	20%	14%
	3-750 kcmil, Cu-EPR	–	–	42%	28%	19%
25 kV	1-1/0, Al-EPR	32%	–	–	–	–
	3-1/0, Al-EPR	–	–	27%	–	–
	3-600 kcmil, Al-EPR	–	–	–	38%	26%
	3-1,100 kcmil, Al-EPR	–	–	–	–	34%

[1] Although percent fill is less than 55%, it is difficult to pull 750 kcmil triplex in 3” conduit. It is acceptable to pull 750 kcmil triplex in existing 3” conduit . New construction should use 4” conduit.

7. Sidewall Bearing Pressure (SBP)

   Sidewall pressure is exerted on a cable as it is pulled around a bend. **The following limits are recommended:**

   A. SBP = 500 pounds/foot for one solid dielectric cable (XLPE or EPR insulation).

   B. SBP = 1,000 pounds/foot for two or more solid dielectric cables (XLPE or EPR insulation).

   C. SBP = 300 pounds/foot for PILC (lead) cables.

Formulas and Parameters (continued)

8. Weight Correction Factor

   This is an important factor to calculate because when you pull two or more cables in a conduit, the sum of the forces developed between the cables and the conduit is always greater than the sum of the individual cable weights. When you have three single cables of equal diameter and weight, you can expect a higher weight factor for the cradled position than the triangular position. Assume that the cables will sit in the cradled position (unless you are pulling triplexed cables from a single reel), because this will yield a higher and therefore more conservative pulling tension calculation.

   For one or two cables

   $$w_{single} = 1$$

   For three cables in a cradled configuration
   Where 3 > J > 2.5

   $$w_{cradled} = 1 + 4/3\ (d/D - d)^2$$

   For three cables in a triangular configuration
   Where J < 2.5

   $$w_{triangular} = 1 \div \sqrt{1 - (d/D - d)^2}$$

   For four cables (quadruplex) in a diamond configuration
   Where J < 3.0

   $$w_{diamond} = 1 + 2\ [d \div (D - d)^2]$$

9. Maximum Allowable Pulling Tension

   The maximum allowable pulling tension is the lesser of the allowable tension on the pulling device and the maximum pulling tension that can be applied to the conductors.

   Definition of symbols:
   w = Weight Correction Factor
   f = Coefficient of Friction
   W = Cable Weight, pounds per foot
   L = Length of conduit run, in feet

10. Equations to calculate pulling tension formulas

    A. Tension, Horizontal Straight Section

    $$T_{out} = wfWL + T_{in}$$

    B. Tension, Natural or Factory Bend Section (except for "D" below)

    $$T_{out} = T_{in}\cosh(wf\theta) + \sinh(wf\theta) \times \sqrt{T_{in}^2 + (WR)^2}$$

    Where: $\sinh(wf\theta) = (e^{wf\theta} - e^{-wf\theta}) / 2$
    $\cosh(wf\theta) = (e^{wf\theta} + e^{-wf\theta}) / 2$

    And θ = Angle of bend, in radians
    R = Sweep radius
    e = 2.718

    C. Tension, inclined and Vertical Straight Section

    (1) Pulling up a Straight Section

    $$T_{out} = WL\ (\sin(\theta) + wf\cos(\theta)) + T_{in}$$

    Where: θ = Angle of incline

    (2) Pulling down a Straight Section (utilize equation for horizontal straight section)

    $$T_{out}\ wfWL + T_{in}$$

Formulas and Parameters (continued)

D. Tension, Convex Bend at Top of Incline, Upward Pull

$$T_{out} = T_{in}\, e^{wf\theta} + (WR / (1 + (wf)\, 2))\, [2wfe^{wf\theta} \sin\theta + (1 - w^2 f^2)(1 - e^{wf\theta} \cos\theta)]$$

Where: θ = Angle of bend (same as angle of slope)

R = Sweep radius

e = 2.718

11. When cable is pulled through a conduit bend or around a sheave, sidewall bearing pressure (SBP) develops between the cable wall and the bend or sheave. This pressure has a dramatic effect on the sizing of the conduit system, because it relates directly to the radii of bends, pulling tension and cable's weight.

For single cable:

$$SBP = T \div R$$

For 3 cables in cradled configuration:

$$SBP = [(3w_{cradled} - 2)\, T] \div 3R$$

For 3 cables in triangular configuration:

$$SBP = (w_{triangular} T) \div 2R$$

For 4 cables in diamond configuration:

$$SBP = (w_{diamond} - 1)\, (T \div R)$$

12. It is necessary to have adequate clearance between the uppermost cable and the top of the conduit to ensure a safe and easy pull. For straight pulls, a clearance of 1/4" is safe. For pulls that include bends, a clearance of 1/2" to 1" is needed. Use the outside diameters of the circumscribing circle listed on Document 039955 to determine cable clearances.

Determining Pulling Tension for Sections Containing Sweeps

Example

Given:

- Conduit layout as shown in Figure 8.
- Conduit size 6 inch, 6.11”.
- Size of cables: three 1/C 1,100 kcmil Al. EPR-CONC-Encap PE, 25 kV.
- Weight of cable = 3 x 2.36 lbs. = 7.08 pounds/foot.
- Coefficient of Friction = 0.30

Find:

- If cable can be pulled without damage.
- Best direction of pull.
- What type of pulling attachment can be used.

1. The first step is to calculate conduit fill in percent:

d = 2.05” from Document 039955.

D = 6.11” From Table 10-3 of the *Electric Design Manual.*

r = d/2 = 1.025”

Cable Area = $3\pi\ (d/2)^2$ or Cable Area = $3\pi r^2$

Cable Area = 9.902 in ^{2}

Conduit Area = $\pi\ (D/2)^2$

Conduit Area = 29.321 in ^{2}

Conduit Fill = (Cable Area/Conduit Area)*100%

Conduit Fill = 33.771%

This is less than the 55% percent conduit fill allowed.

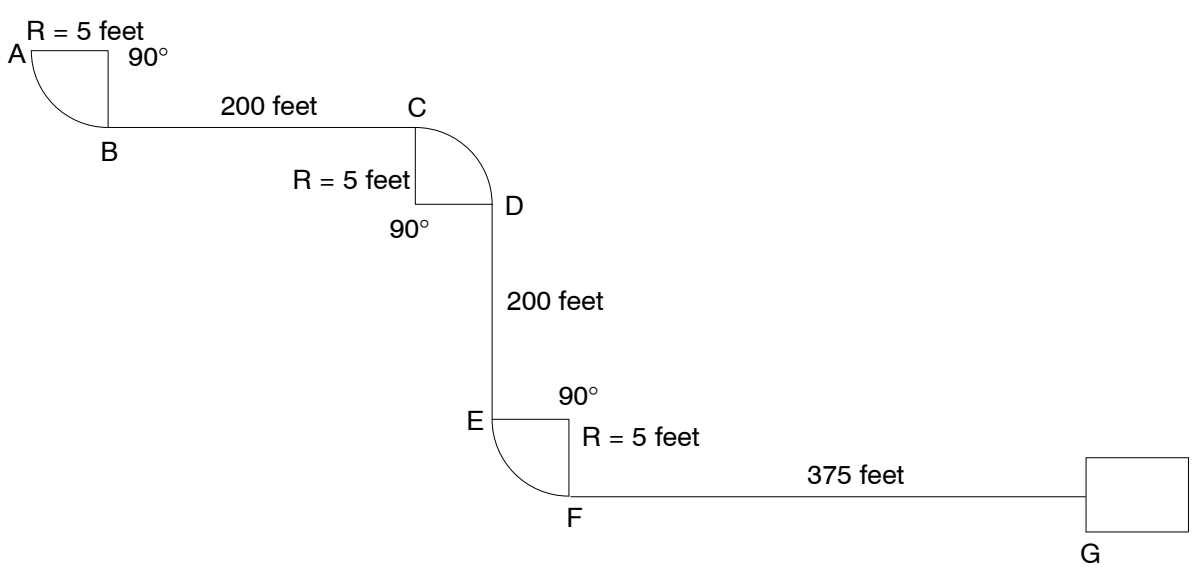

Figure 8
Typical Duct Layout

Determining Pulling Tension for Sections Containing Sweeps (continued)

2. The next step is to calculate the jam ratio to determine the cable configuration and the probabilities of cable jamming.

   J = D/d = 2.98

   Since this ratio is larger than 2.5 but less than 3, it is assumed that the cables are going to be in the cradled configuration. Cable clearance does not need to be checked.

   Check the probability of jamming by using the following formula:

   J = 1.05 D/d

   J = 1.05*2.98 = 3.13

   In this case the probability of jamming is greater than 3.1; therefore, jamming is not expected to happen.

3. The next step is to calculate the weight correction factor for this cable:

   $w_{cradled} = 1 + (4/3)*(d/D-d)^2 = 1.339$

4. We can now proceed to calculate the pulling tensions:

   $T_{in} = 0$ **Tension at A!**

   Tension at B is calculated using the formula for horizontal bend section:

   $W = 7.08$ lbs/ft $R_{AB} = 5$ ft $f = 0.2$ $\theta = p/2$

   $T_{AB} = T_{in}\cosh(w_{cradled}f\theta) + \sinh(w_{cradled}f\theta)\sqrt{T_{in}^2 + (WR_{AB})^2}$

   $T_{AB} = 0 + (0.674)\sqrt{0 + (35.4)^2}$

   $T_{AB} = 23.85$ lbs

   Tension at C is calculated using the horizontal straight section formula:

   $L_{AB} = 200$ ft $T_{BC} = w_{cradled}fWL_{AB} + T_{AB}$ $T_{BC} = 568.81 + 23.85 = 593$ lbs

   Tension at D is calculated using the formula for horizontal bend section:

   $R_{CD} = 5$ ft

   $T_{CD} = T_{BC}\cosh(w_{cradled}f\theta) + \sinh(w_{cradled}f\theta)\sqrt{T_{BC}^2 + (WR_{CD})^2}$

   $T_{CD} = 715.02 + 400.22 = 1{,}115$ lbs

   Tension at E is calculated using the pulling down straight section formula.

   $L_{DE} = 200$ ft $T_{DE} = wfWL_{DE} + T_{cD}$ $T_{DE} = 568.81 + 1{,}115 = 1{,}684$ lbs.

   $T_{EF} = 3{,}165$ lbs

   $T_{FG} = 4{,}232$ lbs

   Since this tension exceeds the maximum allowable tension of 2,000 lbs. on pulling grips (see Table 8 on Page 15), pulling eyes are needed for this pull (10,000 lbs. limit). Also, the maximum tension on the conductor can be calculated as follows:

   A_C = Area in cmil cmil = mil^2 N_c = Number of Conductors

   $S_c = 0.008$ lbs/cmil Maximum Stress on Al or Cu conductors!

   The area of 1,100 kcmil is: $A_c = 1{,}100{,}000$ cmil and $N_c = 3$

   $T_{conductor} = N_cS_cA_c = 26{,}400$ lbs

Determining Pulling Tension for Sections Containing Sweeps (continued)

The maximum allowable tension on these cables is the lesser value of the calculated tension on the conductor(s) and the maximum tension on the pulling device. In this case, the 10,000 lbs limit on the pulling eye is the maximum allowable tension. Refer to Table 8 on Page 15 through Table 10 on Page 16 for the maximum allowable tension on PG&E's cables.

Reverse Direction Calculations

Tension at F is calculated as follows:

L_{FG} = 375 ft. T_{in} = 0

$T_{GF} = w_{cradled} f W L_{FG} + 0$ = 1,067 lbs

T_{FE} = 2,006 lbs
T_{ED} = 3,422 lbs
T_{DC} = 6,432 lbs
T_{CB} = 7,001 lbs
T_{BA} = 13,158 lbs

Since the pulling tension from G to A is greater (13,158 lbs.) than the pulling tension from A to G (4,232 lbs.), and pulling tension from G to A exceeds the 10,000 lbs maximum allowable tension on the puling eye, cable must be pulled in the direction from A to G.

5. Finally, the sidewall bearing pressure limits need to be checked at the bends.

The pulling tensions at B and D are not very significant, but the tension at F may be a concern in terms of sidewall bearing pressure.

$SBP = [(3w_{cradled} - 2)T_{EF}]/3R_{EF} = [(3*1.339 - 2)*3,165]/15$
SBP = 426 lbs/ft

As we can see, the limit of 1,000 lbs/ft for two or more solid dielectric cables is not exceeded at the bend between points E and F.

However, if any of the limits are exceeded, consider one or more of the following options:

- Increase bend radii.
- Decrease conduit fill.
- Reduce the number of bends.
- Try reverse pull.
- Pull in stages.
- Decrease length of pull.

Maximum Allowable Pulling Tensions for Various Cable Rating, Sizes, and Configurations

Table 8 Maximum Allowable Pulling Tensions for 1/C Aluminum or Copper XLP or EPR Insulated Cables

Cable Rating	Cable Size AWG or kcmil	Maximum Allowable Pulling Tension (lbs.)					
		1/C per Duct		2/C per Duct		3/C per Duct	
		Grip	Pulling Eye	Grip	Pulling Eye	Grip	Pulling Eye
600 V Through 35 kV	#4	334	334	668	668	668	668
	#2	531	531	1,062	1,062	1,062	1,062
	1/0	844	844	1,688	1,688	1,688	1,688
	2/0	1,000	1,065	2,000	2,130	2,000	2,130
	4/0	1,000	1,693	2,000	3,386	2,000	3,386
	250	1,000	2,000	2,000	4,000	2,000	4,000
	350	1,000	2,800	2,000	5,600	2,000	5,600
	500/600	1,000	4,000	2,000	8,000	2,000	8,000
	700	1,000	5,600	2,000	10,000[2]	2,000	10,000[2]
	750	1,000	6,000	2,000	10,000[2]	2,000	10,000[2]
	1,000/1,100	1,000	8,000	2,000	10,000[2]	2,000	10,000[2]
	1,500	1,000	10,000[2]	–	–	–	–

[2] Limited by cable pulling and reel handling equipment.

Table 9 Maximum Allowable Pulling Tensions for 1/C Copper P&L and PL&N Cables

Cable Rating	Cable Size AWG or kcmil	Maximum Allowable Pulling Tension (lbs.)					
		1/C per Duct		2/C per Duct		3/C per Duct	
		Grip	Pulling Eye	Grip	Pulling Eye	Grip	Pulling Eye
1 kV	1/0	–	–	–	–	475	1,265
	250	–	–	–	–	677	3,000
	500	458	3,000	–	–	916	6,000
	750	571	4,500	–	–	1,141	9,000
	1,000	674	6,000	–	–	1,349	12,000
	1,500	897	9,000	–	–	–	–
5 kV	#4	–	–	415	501	415	501
	#2	–	–	460	796	460	796
	2/0	–	–	597	1,600	597	1,600
	250	–	–	725	3,000	725	3,000
	500	512	3,000	–	–	1,025	6,000
	750	631	4,500	–	–	1,262	9,000
15 kV	#4	–	–	653	653	653	653
	#2	–	–	693	796	693	796
	2/0	–	–	733	1,600	733	1,600
	250	–	–	916	3,000	916	3,000
	500	622	3,000	–	–	1,244	6,000
	750	750	4,500	–	–	1,498	9,000
	1,000	700	6,000	–	–	1,400	10,000[1]
	1,500	857	9,000	–	–	–	–
	2,000	1,008	10,000[1]	–	–	–	–
25 kV	#2	–	–	–	–	800	1,060
	250	–	–	–	–	928	3,000
	500	–	–	–	–	1,181	10,000[1]

[1] Limited by cable pulling and reel handling equipment.

Table 10 Maximum Allowable Pulling Tensions for 3/C Copper PL&N Cables, 1/C per DuctRevised

Cable Rating	Cable Size AWG or kcmil	Maximum Allowable Pulling Tension (lbs.)	
		Grip	Pulling Eye
5 kV	#2	464	1,194
	2/0	510	2,400
	250	657	4,500
	500	875	9,000
15 kV	#2	708	1,195
	2/0	840	2,400
	250	866	4,500
	500	1,150	9,000
	750	1,434	10,000[1]

[1] Limited by cable-pulling and reel-handling equipment.

Revision Notes

Revision 10 has the following changes:

1. Added a paragraph under Conduit and Substructure Installation section for installing conduit under bio swales. On Page 1 and Page 2.

PG&E	**SERVICE ENTRANCE FROM UNDERGROUND VAULT USING BUS BARS**		**041352**
Dept:	Distribution	**Section:**	Electric
Approved by:	D. H. Mulkey	**Date:**	11-30-95
Rev. #01: This document replaces Document 041352, Rev. #00. For a description of changes, see Page 3.			

Purpose and Scope:

The purpose of this document is to illustrate the preferred method of installing a service entrance from an underground vault using bus bars.

General Information:

1. Customer shall drill bus bars to fit connectors furnished by PG&E.
2. If the above configuration or dimensions illustrated in this document are impracticable because of physical or other limitations, consult PG&E.
3. For customer-owned underground vaults, consult PG&E.
4. All exposed grounded metal bolts within 10” of bus bars shall be suitably insulated.
5. For bus rated at less than 3,000 Amps, bus bars may extend less than 12” from bus support and smokeproof barrier. Consult PG&E.
6. Barrier not needed if firestop supports the bus and is smokeproof.

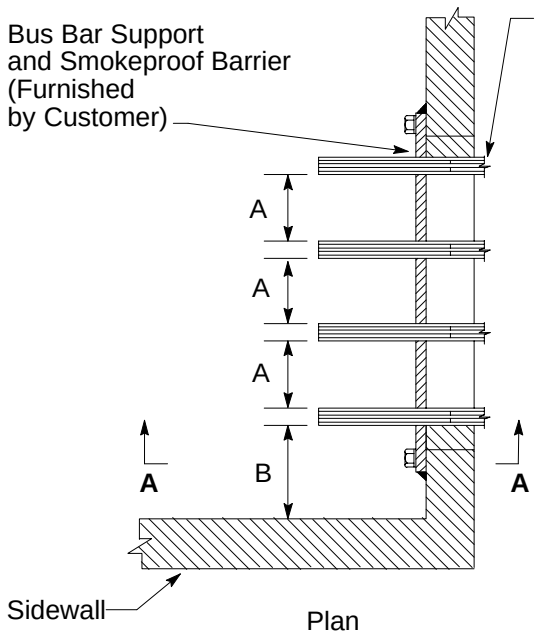

Figure 1
Service Entrance

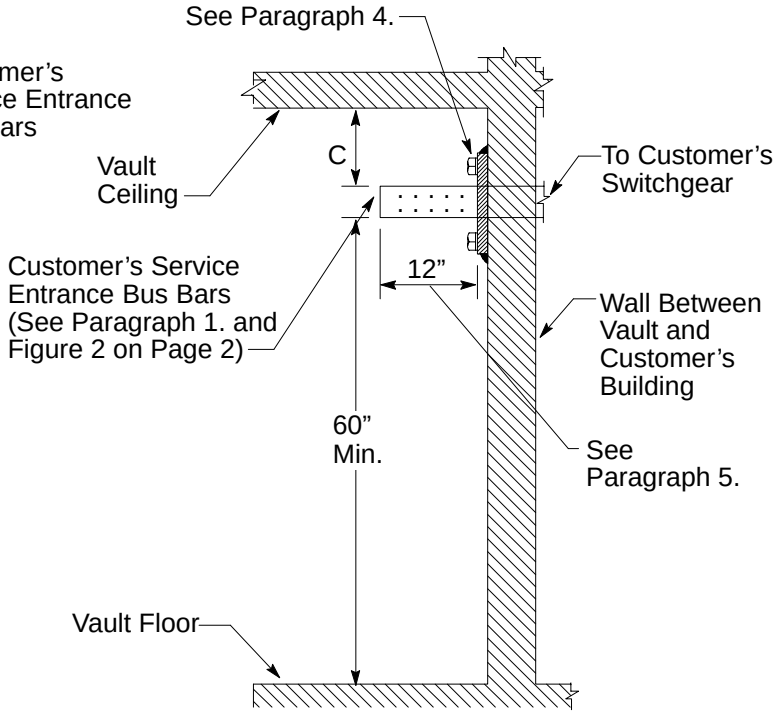

Section A-A

Service Entrance From Underground Vault Using Bus Bars

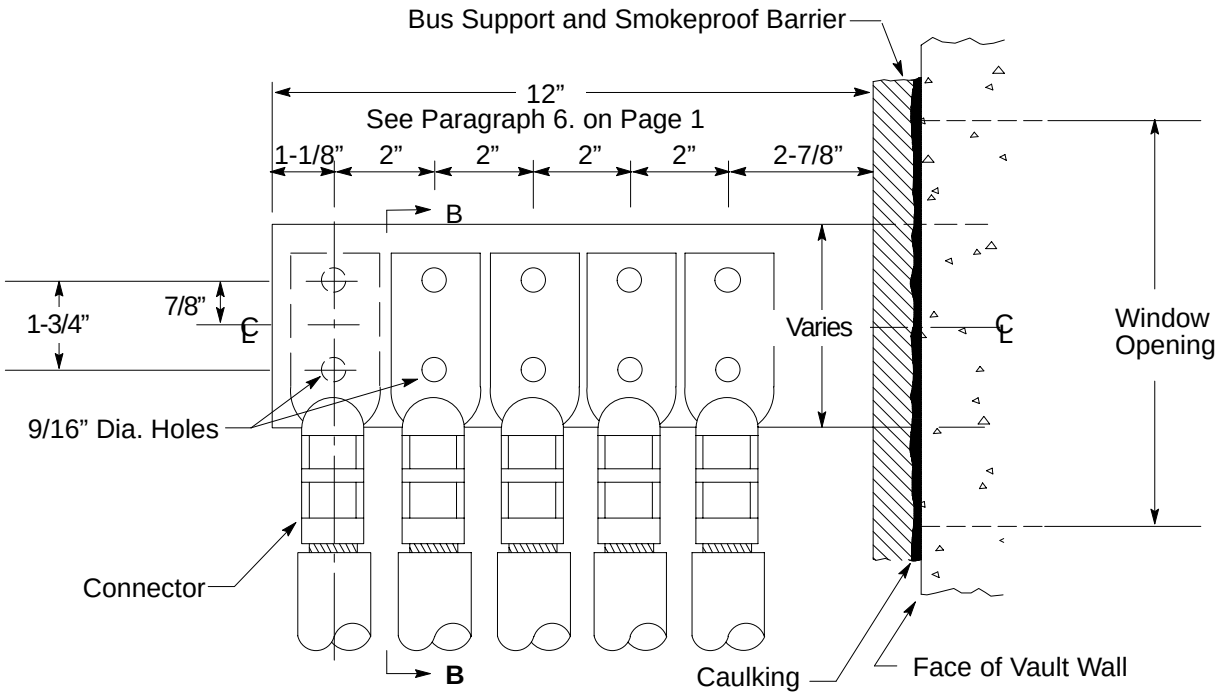

Figure 2
Connection to Customers Bus Bar

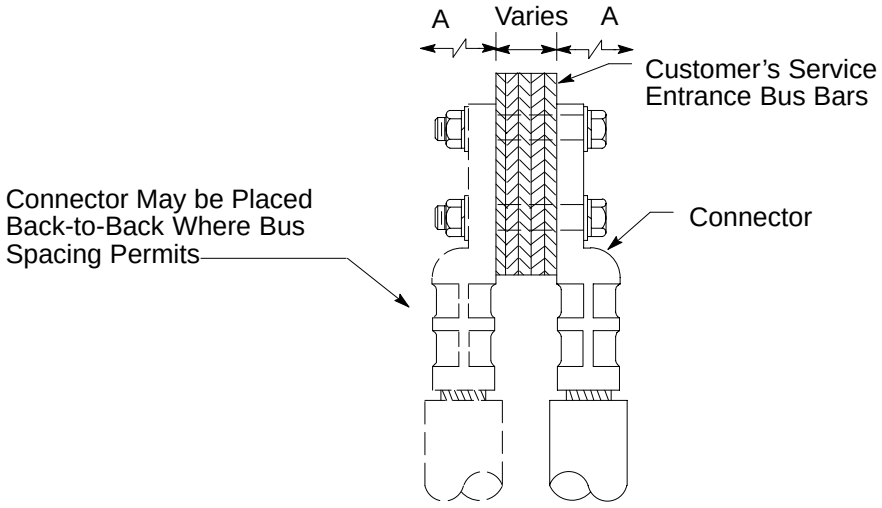

Section B-B

Table 1 Minimum Dimension in Inches

Circuit Voltage	Dimensions (Inches – Minimum)		
	A	B	C
120/208	8	10	10
277/408			

This document is also seen in Section 15 of the Electric and Gas Service Requirements (“Green Book”) and in Section 13 of the Electric Meterman’s Manual.

Service Entrance From Underground Vault Using Bus Bars

Revision Notes:

Revision 01 has the following changes:

1. Minor changes have been made to bring this document up to current publishing specifications.

Prepared by: ABB1

CONCRETE PAD FOR THREE-PHASE, LOOP-STYLE, PAD-MOUNTED TRANSFORMERS

045292

Asset Type:	Electric Distribution	**Function:**	Design
Issued by:	Connie Pascua (CZP1)	**Date:**	04–15–09

Rev. #12: This document replaces PG&E Document 045292, Rev. #11. For a description of the changes, see Page 8.

This document is also included in the following manual:

- *Electric and Gas Service Requirements Manual* (Greenbook)

Purpose and Scope

This document shows construction details for concrete pads for three-phase, loop-style, pad-mounted transformers. Refer to Document 043817 for installation details of three-phase, radial-style, pad-mounted transformers. See Document 045290 and Document 045291 for fabrication and installation details of three-phase, loop-style, pad-mounted transformers.

General Information

1. When a pad is installed by the customer, that customer shall provide all materials. In areas of known unusually soft soil conditions, PG&E will require special treatment as specified in Notes 12, 13, and 14. Before pouring or setting the pad, the customer or contractor will request an inspection by PG&E to approve the installation. PG&E shall determine the acceptability of each pad installation.
2. The installation of the pad includes the two ground rods and the interconnecting ground wire.

Application

3. If a pad-mounted transformer cannot be located away from vehicular traffic, the customer shall provide suitable barriers for the protection of the transformer. PG&E shall determine the protection requirements according to Document 051122.
4. If the customer is to use bus duct, the secondary opening is not needed. Grout in the window of precast pads.
5. The pad sizes are based on maximum dimensions, including cooling radiators, of the various manufacturers' transformers.
6. The Style IIE transformers will fit on Style IIB/IIC/IIF pads. The 75 kVA, Style IIE transformer will fit on the largest Style IIE pad. The 300 kVA, Style IIE transformer will fit on the small Style IIE pad. The 2,500 kVA, Style IIE transformer will sit on the old 80" x 106" pad, but the radiators will overhang the pad. (Note: Some 1989 and 1999 Style IIE transformers have radiators that will overhang the pad.)
7. The Style IIG will fit on the largest IIE pad.
8. The Style IIH will fit on the largest IIC/IIF pad.

Construction Notes

9. In general, all equipment pads should be installed as level as practical. Pads supporting oil-filled equipment must be leveled to within 1 inch in 8 feet in all directions.
10. The transformer pad shall be placed on firm, compacted native material or on engineered fill which has been compacted at least to the requirements of Note 13.
11. The area under the pad shall be excavated to the required grade, or to a depth necessary to reach firm, undisturbed material, whichever is deeper. The material can be considered firm if it cannot be penetrated by thumb except with moderate effort.
12. If firm material has not been reached within a depth of 3 feet, excavate 3 feet beyond the perimeter of the pad and backfill the entire excavated area to the required grade and to the requirements of Note 13.
13. In case it has been necessary to excavate deeper than the required grade to reach firm material, backfill to the required grade in one of the following ways:

A. Backfill with clean, non-expansive soil compacted to 90% of maximum density. Soil shall be placed in layers not more than 8 inches thick before compaction. Maximum density and in-place density is to be determined by California Test Method No. 216-G, Part I and II respectively, or by ASTM D-1556 and ASTM D-1557 respectively. A copy of the test results may be required by PG&E.

B. Backfill with soil-cement slurry consisting of one sack of Portland cement per cubic yard and clean native soil or sand. When slurry is used as a backfill material, the customer will not be required to use a poured-in-place pad.

14. In areas of known soft soil conditions, trenches within the pad excavation area for the installation of conduits shall be backfilled in one of the ways specified in Note 13 on Page 1.
15. In addition to the above, precast pads shall be placed on a 3-inch layer of slurry backfill or sand screeded level to provide uniform bearing.
16. Conduit windows shall be grouted with non-shrink grout (asphalt or blacktop is not approved for grouting).
17. Concrete shall be designed to attain a strength of 2,500 pounds per square inch (psi) at 28 days. Slump for concrete placement shall not exceed 3 inches. Reinforcing steel shall be per ASTM A615, Grade 40 minimum.
18. A minimum distance of 6 feet shall be maintained between ground rods.
19. Wood-float or light broom finish the top of the slab. Finish all exposed edges with a finishing tool. Vertical edges shall have a 3/4-inch chamfer. Slope exposed horizontal surfaces slightly for drainage. Moist-cure concrete for at least 7 days after pouring. Do not install transformer until 14 days after pouring concrete. See Note 20 for exceptions to this requirement.
20. The transformer may be installed earlier than the 14 days specified above, provided the concrete has attained a compressive strength of at least 1,500 psi obtained as follows (this procedure is permitted only for urgent cases where earlier pouring of pad is not practical):

    A. For a six-sack mix using normal Portland cement, the transformer may be installed after 7 days; or for a six-sack mix using high early-strength cement, the transformer may be installed after 72 hours.

    B. All concrete must be moist-cured to the minimum period specified above before installing the transformer.

    C. Verify the required strength by either concrete cylinder test or Schmidt hammer test.
21. Belled ends of conduits should be placed approximately 1 inch above the concrete pad surface. If belled ends are removed, install end bell fittings. Temporarily plug or cap all conduits.
22. Only PG&E-approved utility electric-service-related equipment and structures may be installed in the area beneath the transformer pad. The area 6 feet deep and 12 inches horizontally around the pad shall be free of all foreign substructures.

Construction Notes for Precast Pads

23. Concrete shall be designed to attain a strength of 2,500 psi in 28 days.
24. Inserts and securing of inserts shall be of sufficient strength to lift the pad. A minimum of three inserts with 7/8-inch diameter, UNC thread and 2-1/4 inch inside depth, steel, galvanized with temporary plugs shall be provided.
25. Inserts shall be installed flush with the surface of the pad.
26. Reinforcing bars shall be as per ASTM A615, Grade 40 minimum.
27. All exposed edges shall have a 3/4-inch chamfer or radius.
28. Surface shall have a light broom or wood-float finish.
29. The surface of the pad shall be level and flat.
30. Precast pads shall be permanently identified with manufacturer's name (for location see Figure 4 and Figure 5 on Pages 7 and 8) and have the weight stenciled on top of the pad.

Concrete Pad for Three-Phase, Loop-Style, Pad-Mounted Transformers

References	Location	Document
Corrosion Resistant Ground Rods and Ground Rod Clamps	UG-1: Connectors/Greenbook	013109
Installation of Three-Phase, Radial-Style, Pad-Mounted Transformers	UG-1: Transformers	043817
Loop-Style, Three-Phase, Pad Mounted Transformers	UG-1: Transformers	045290
Installation of Loop-Style, Three-Phase, Pad-Mounted Transformers	UG-1:Transformers	045291
Location, Clearances, and Mechanical Protection Details for Pad-Mounted and Subsurface Equipment	UG-1: General	051122
Underground Conduits	UG-1: Conduits	062288

Concrete Pad for Three-Phase, Loop-Style, Pad-Mounted Transformers

Table 1 Bill of Materials for Concrete Transformer Pads

Item	Quantity	Description	Code	Document
1	1	Pad, Concrete, Reinforced (see Page 5)	–	–
2	As Required	Wire, #2 AWG, Solid, Soft Drawn, Bare Copper [1]	290074	–
3	2	Ground Rod, 5/8” x 8’, Copperclad	187013	013109
4	2	Clamp, Ground Rod, for Item 3	187012	
5	As Required	Conduit, Type and Size (as required)	–	062288
6	As Required	Reinforcing Steel, Number 4 [2]	–	–
7	As Required	Compacted Backfill	–	–
8	Tool	Bolt, Eye, 7/8” Diameter x 1-1/2” Long, 1-1/2” Inside Diameter, Shoulder-Type	190013	–

[1] When pad is installed for PG&E by others, the use of solid or stranded wire is acceptable.
[2] Number 3 rebar at 12-inch maximum separation with 4x4 6-6 wire mesh over the entire surface may be substituted for the use of Number 4 rebar.

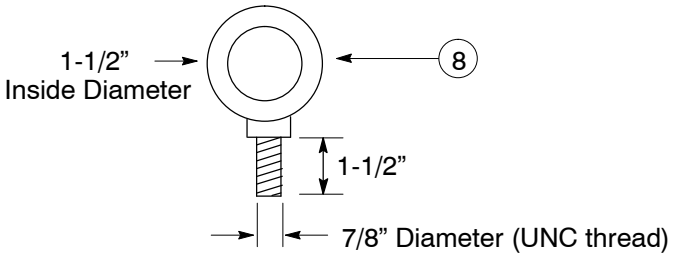

Detail A
Lifting Eye for Pad and Boxes

Concrete Pad for Three-Phase, Loop-Style, Pad-Mounted Transformers

Pad Arrangements for Style IIA, IIB, IIC, IIF, and IIH Transformers

Notes

1. Primary conduits must be centered in the window.
2. Secondary conduits shall be grouped towards the front of the pad.
3. Precast pads do not have cut off walls.
4. A 6-foot minimum separation shall be maintained between ground rods.
5. The ground wire must be a continuous wire that runs from the outside ground rod, under the pad, to the primary window, then above the pad from the primary window, through the secondary window, to the secondary ground rod as shown below.

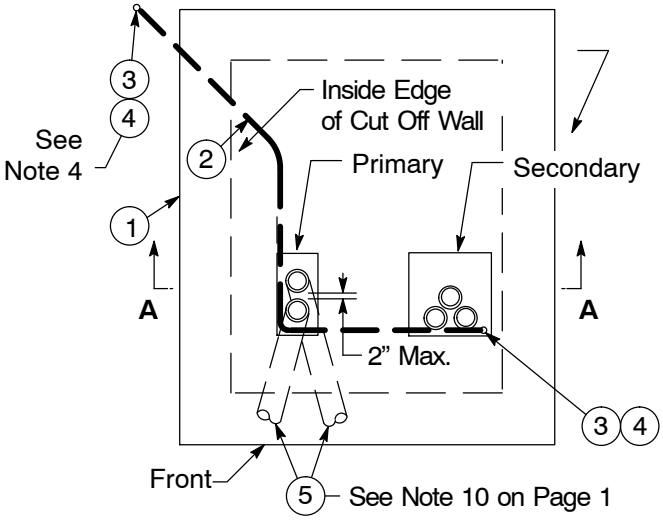

Plan View

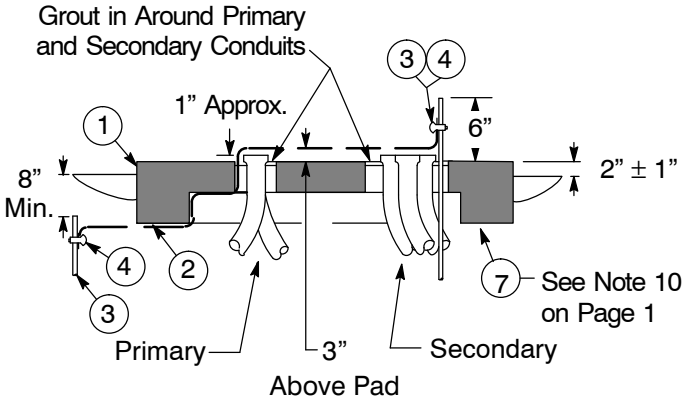

Section A-A

Figure 1
Style IIA, IIB, IIC, IIF, and IIH Pad Arrangement,
Poured-in-Place Pad Shown

Concrete Pad for Three-Phase, Loop-Style, Pad-Mounted Transformers

Pad Arrangements for Style IID, IIE, and IIG Transformers

Notes

1. Install primary conduits as shown. Keep single primary conduit installation to the left as indicated to reduce strain on elbow terminators.
2. Secondary conduits shall be grouped towards the front of the pad.
3. Precast pads do not have cut off walls.
4. A 6-foot minimum separation shall be maintained between ground rods.
5. The ground wire must be a continuous wire that runs from the outside ground rod, under the pad, to the primary window, then above the pad from the primary window, through the secondary window, to the secondary ground rod as shown below.

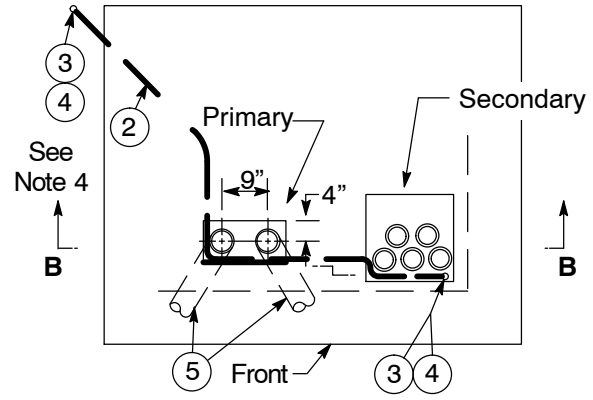

Plan View

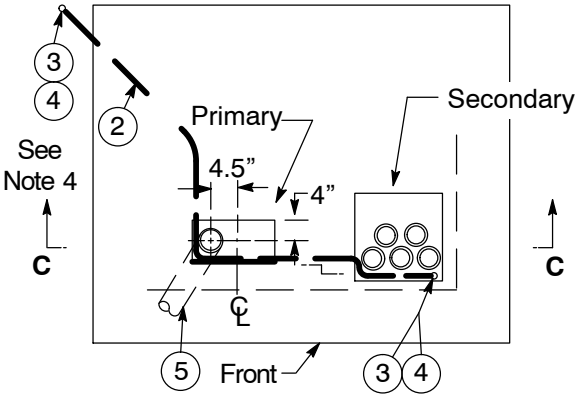

Plan View

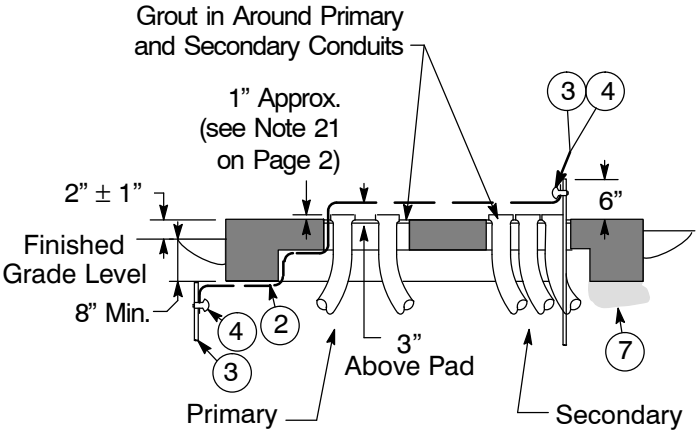

Section B-B

Figure 2
Loop Installation of Style IID, IIE, and IIGPad Arrangement, Poured-in-Place Pad Shown

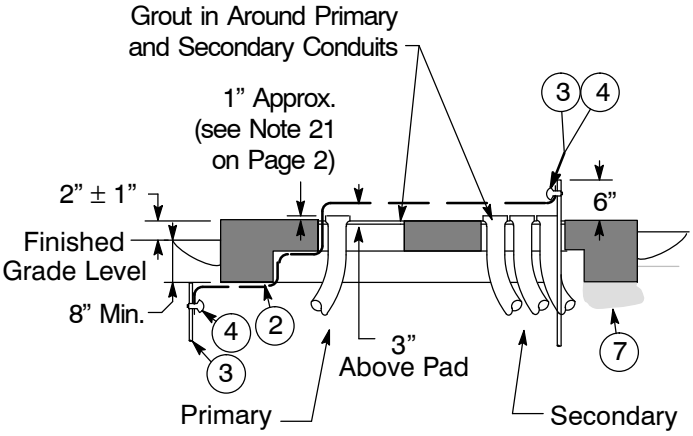

Section C-C

Figure 3
Radial Installation of Style IID, IIE, and IIG Pad Arrangement, Poured-in-Place Pad Shown

Concrete Pad for Three-Phase, Loop-Style, Pad-Mounted Transformers

Concrete Pad Details for Style IIA, IIB, IIC, IIF, and IIH Transformers

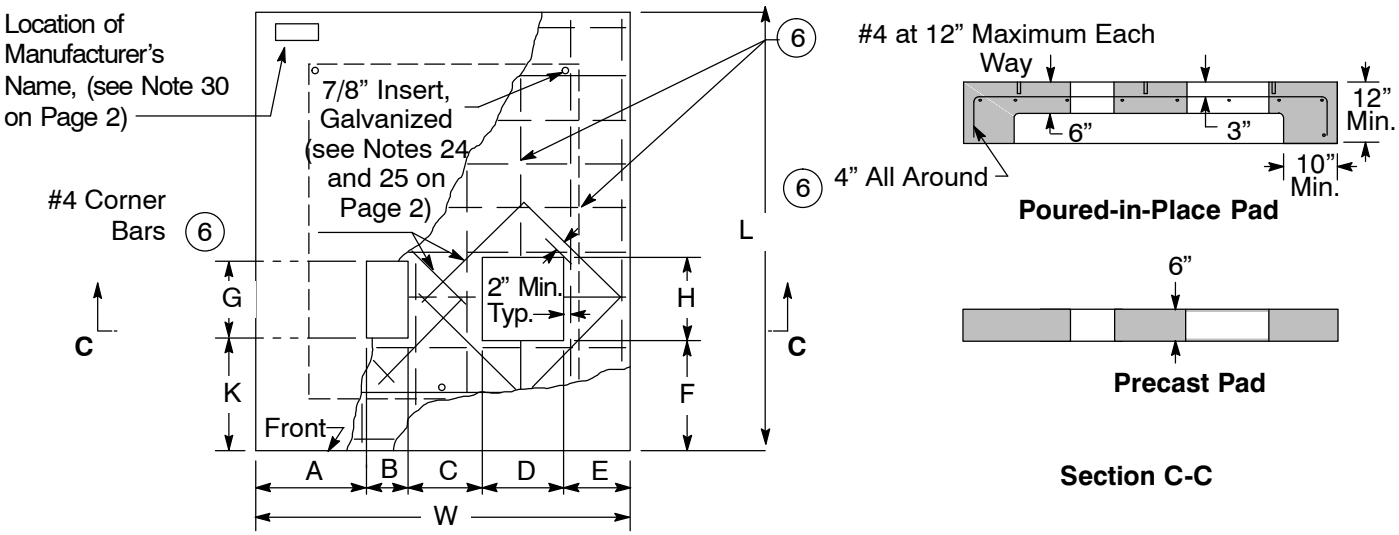

Figure 4
Construction Details of Style II A/B/C/F/H Pad
(see Figure 1 on Page 5 for pad arrangement)

Table 2 Dimensions and Codes for Style IIA, IIB, IIC, IIF, and IIH Transformer Pads [1]

Transformer			Pad Dimensions (inches)											Code
Style	kVA Size	Approximate Maximum Weight (lbs)	A	B	C	D	E	F	G	H	K	L	W	
IIA	75	3,200	21	8	14	16	13	15	16	16	15	72	72	043436
	(112.5) [2]	3,200												
	150	3,500												
	(225) [2]	4,000												
	300	4,500												
IIB and IIF	(225) [2]	4,500	23	8	19	17	13	15	16	19	15	78	80	043538
	300	5,000												
	(500) [2]	6,000	29				23					100	96	040242
	750	9,000	32				22					112	98	040243
	1,000	11,000	36				26					117	106	040244
IIC and IIF	1,500	13,000	31	8	23	17	26	15	16	19	15	120	105	040245
	(2,000) [2]	15,000												
IIC and IIF	2,500	16,000												
IIH	2955/ 3325	22,000												

[1] See Document 066211 for approved suppliers.
[2] ( ) = Indicates a kVA size that is no longer purchased.

Concrete Pad for Three-Phase, Loop-Style, Pad-Mounted Transformers

Concrete Pad Details for Style IID, IIE, and IIG Transformers

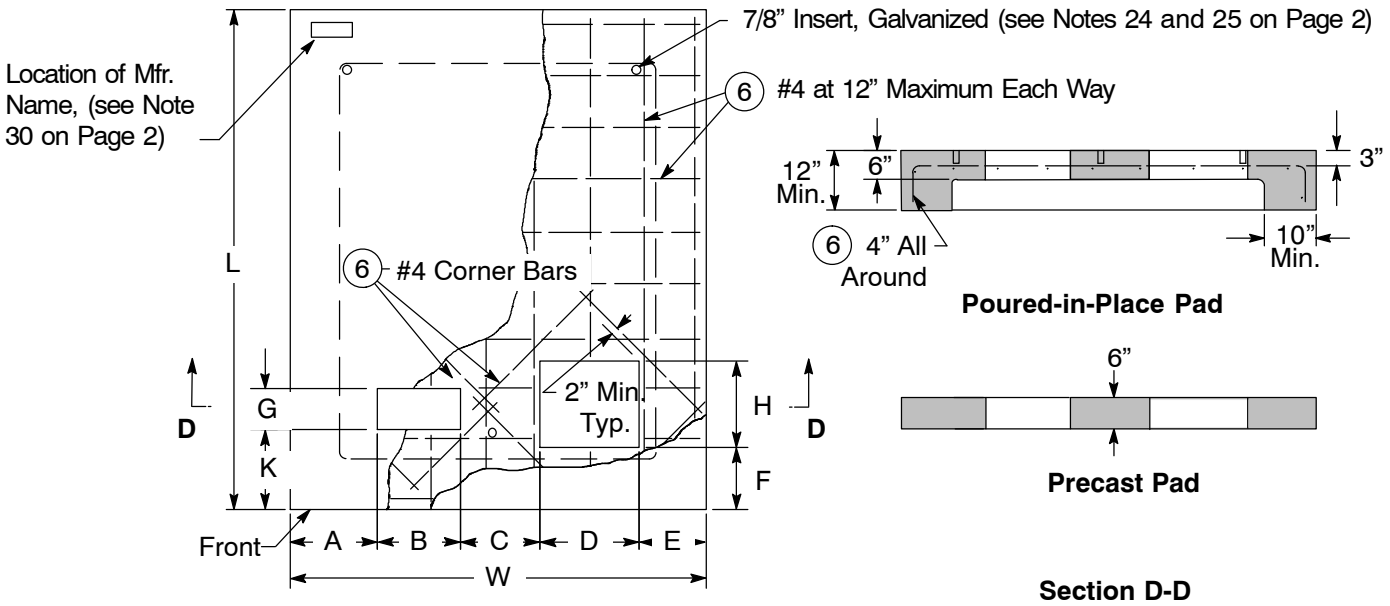

Figure 5
Construction Details of Style IID, IIE, IIG Pad
(see Figure 2 on Page 6 for pad arrangement)

Table 3 Dimensions and Codes for Style IID, IIE, and IIG Transformer Pads [1]

Transformer			Pad Dimensions (inches)											Code
Style	kVA Size	Approximate Maximum Weight (lbs)	A	B	C	D	E	F	G	H	K	L	W	
IID and IIE	75	4,600	17	16	15	19	13	10	6	17	14	61	80	040291
	(112.5) [2]	4,800												
	150	5,000												
	(225) [2]	5,500												
IIE	300	5,800	22	16	15	20	17	20	6	19	25	106	90	040292
	(500) [2]	6,100												
	750	9,000												
	1,000	11,000												
	1,500	13,000												
IIE	2,500	16,000	22	16	15	20	17	20	6	19	25	106	90	040292
IIG	2955/3325	22,000												

1 See Document 066211 for approved suppliers.
2 ( ) = Indicates a kVA size that is no longer purchased.

Revision Notes

Revision 12 has the following changes:

1. Added Notes 7 and 8 to Application notes on Page 1.
2. Added Transformer IIH to Pad Arrangements on Page 5.
3. Added Transformer IIG to Pad Arrangements on Page 6.
4. Added Transformer IIH to Concrete Pad Details and revised Table 2 on Page 7.
5. Added Transformer IIG to Concrete Pad Details and revised Table 3 on Page 8.

Prepared by: ABB1

CLEARANCES AND LOCATION REQUIREMENTS FOR ENCLOSURES, PADS, AND UNDERGROUND EQUIPMENT

051122

Asset Type:	Electric Distribution	**Function:**	Design
Issued by:	Carlos Araquistain (CJA8) C. Araquistain	**Date:**	07-31-15

Rev. #21: This document replaces PG&E Document 051122, Rev. #20 For a description of the changes, see Page 28.

This document is also included in the following manual:

- *Electric and Gas Service Requirements Manual* (Greenbook)

Purpose and Scope

This document contains information relating to the placement of electric underground equipment and enclosures. This includes pad-mount, subsurface, and vault installations with or without equipment.

References	Location	Document
Marking, Numbering, and Identification of Line Structures	OH: Marking	022168
Concrete Pad for Three-Phase, Loop-Style, Pad-Mounted Transformers	UG-1: Transformers/Greenbook	045292
Pad-Mounted, Load-Break Switches and Fuses	UG-1: Switches	053318
Pad-Mounted Transformers Installed Indoors	UG-1: Transformers/Greenbook	057521
Landscape Screen for Pad-Mounted Transformers	UG-1Transformers/Greenbook	063422
Box-Pad for Pad-Mounted Transformers	UG-1: Transformers/Greenbook	064309
Pad-Mount Capacitor	UG-1: General	066197
PG&E Approved Manufacturers	Greenbook	066211
Installation of Pad-Mounted, Load-Break Junction	UG-1: Switches	066212
General Order (G.O.) 128	TIL	*G.O. 128*

California Administrative Code:

Title 8 – Industrial Relations, Chapter 4, Sub-Chapter 5, Electrical Safety Orders

Title 24 – State Building Standards, Part 3 – California Code of Regulations, California Electric Code

1. Clearances

Clearances are divided into the following sections:

- Building clearances.
- Clearances to foreign substructure.
- Horizontal work space clearances.
- Hazardous locations.

Underground equipment, pads and enclosures shall be located so that they meet or exceed the required clearances in each of the clearances sections **and** in each of their subsections.

Clearances and Location Requirements for Enclosures, Pads, and Underground Equipment

2. Building Clearances

A. Clearances from building surfaces (see Figure 1): Oil filled pad-mount equipment shall have the following clearances (based on *G.O. 128, Rule 34.3 [D]*):

a) 3-foot minimum from combustible building surfaces to the edge of the pad.

b) 2-foot minimum from non-combustible building surfaces to the edge of the pad. Non-combustible materials include brick, clay, concrete, steel, stone, and stucco.

B. Doorway clearance (see Figure 1): Pad-mounted equipment shall not be placed where it impedes the flow of traffic through a doorway. In general, 4 feet of doorway clearance is sufficient (based on the Uniform Building Code).

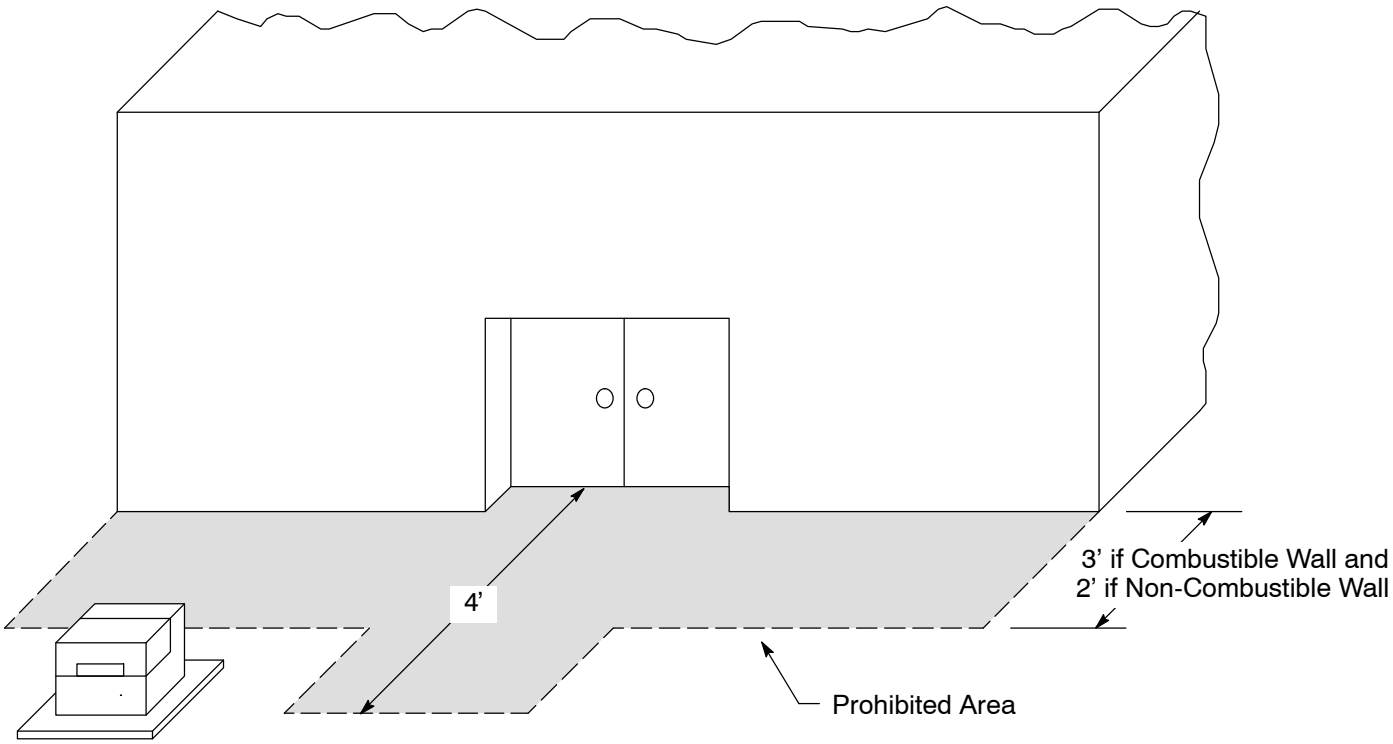

Figure 1
Building and Doorway Clearances
(see Notes 2.A and 2.B)

Clearances and Location Requirements for Enclosures, Pads, and Underground Equipment

2. Building Clearances (continued)

C. Vertical clearance from overhangs (see Figure 2): To provide space for hoisting equipment so that equipment can be replaced, the following vertical clearances from the top of the pad for pad-mounted equipment or top of the enclosure for subsurface equipment are required (based on *G.O. 128, Rules 17.3* and *34.2*).

a) 20-foot minimum for:

- 1∅ pad-mount equipment.
- Subsurface equipment.
- Style MTP 3∅ transformer.

b) 30-foot minimum for:

- 3∅ pad-mount equipment except style MTP transformers.

c) When required for installations such as in dry vaults (Document 057521), the vertical clearance outside the doorway may be reduced to 10 feet from ground level. This reduced clearance will greatly expand the replacement time, since the equipment must be jacked and rolled out to a position where the clearance is adequate to hoist it.

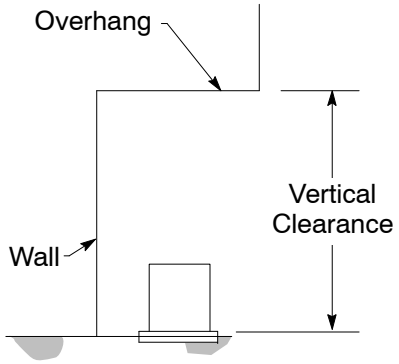

Figure 2
Clearances for Pad-Mounted or Subsurface Equipment (see Note 2.C)

D. Railroad or streetcar track clearance: 6-foot minimum clearance is required from the rail to the nearest edge of any manhole, enclosure, or secondary box (*G.O. 128, Rule 31.5 [D]*).

3. Clearances to Foreign Substructures

A. Pad-Mounted Equipment:
The area 1 foot around and 6 feet below the pad or pedestal shall be kept free of foreign substructures.

B. Subsurface Equipment or Enclosures:
The area 1 foot around and 6 feet below the enclosure shall be kept free of foreign substructures.

4. Work Space Requirements

Maintain work space requirements as indicated on all new installations. Exercise judgement on existing installations where encroachment has occurred. For example, a fire hydrant located within the work space that does not adversely affect operations is not a concern. Clear and level work areas are required around underground equipment and enclosures to provide an adequate safe working space for operation or maintenance. Obstructions and elevation changes, other than a standard city/county street curb, are not allowed in the work space.
(Based on *G.O. 128, Rule 17.3* and *34.2)* .

A. Primary enclosures (see Table 1 below and Figure 3 on Page 5): Sufficient clearance to remove covers, operate with hot sticks, replace equipment and cable, etc., is required. Field conditions and the specific equipment may allow some of the clearances to be reduced.

Table 1 Primary Enclosure Clearances

Primary Enclosures	Required Clearances
Round or Square 3’ x 5’ (interior dimensions)	3’ From Outside Edges
4’ x 6’ 6” (interior dimensions)	3’ From the Outside Edge of the Long Side / 4’ From the Outside Edge of the Short Side
4’ 6” x 8’ 6” (interior dimensions)	3’ From the Outside Edge of the Long Side / 5’ From the Outside Edge of the Short Side
J-Box in 3’ x 5’	3’ on short sides, 2’ on long side adjacent to the junction bars (the non-operable side), 5’ on the long side opposite the junction bars (the operable side)
J-Box in 4’ x 6’ 6”	4’ on short sides, 2’ on long side adjacent to the junction bars (the non-operable side), 5’ on the long side opposite the junction bars (the operable side)
J-Box in 4’ 6” x 8’ 6”	5’ on short sides, 2’ on long side adjacent to the junction bars (the non-operable side), 5’ on the long side opposite the junction bars (the operable side)

B. Pad-Mounted Equipment (see Figure 4 and Figure 5 on Page 6).

a) 8-foot minimum (measured from the edge of the pad) in front of all equipment doors to provide room to operate with hot sticks and to replace the equipment. Note: Some equipment types have operable doors in both the front and the rear, and both require 8 feet of operating room.

b) 3-foot minimum from non-operable sides.
Exceptions:

(1) Landscaping obstructions (decorative walls, planters, rocks, etc.) that are up to about 1 foot wide and 2 feet tall may be placed next to the pad on non-operable sides (refer to Document 063422).

(2) One of the 3-foot dimensions may be reduced to 2 feet where Note 2.A.b on Page 2 applies, except for pad-mount switchgear.

Clearances and Location Requirements for Enclosures, Pads, and Underground Equipment

C. Secondary Enclosures – Minimum Work Space Required:

a) Pedestal: 3 feet in front, 2 feet to the side, and 1 foot to the back.

4. Work Space Requirements (continued)

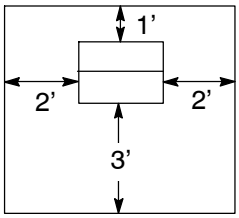

Front

b) Secondary Splice Box – 24” x 36” or smaller: 3 feet on short sides, 2 feet on one long side.

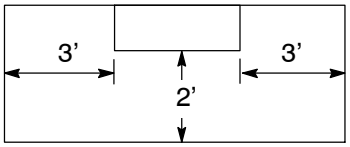

c) Secondary Splice Box – 3’ x 5’ or larger: Same as Table 2.

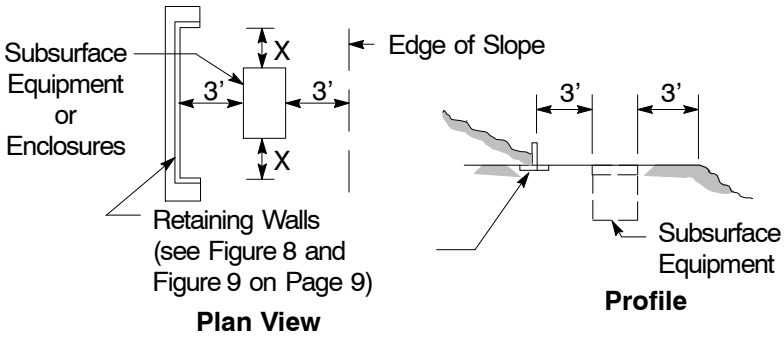

X = 3’ for Round or Square
X = 3’ for 3’ x 5’
X = 5’ for 4’ 6” x 8’ 6”

Figure 3
Example of Subsurface Equipment or Enclosures Installed on Sloped Terrain
(see Note 4.A on Page 4)

4. Work Space Requirements (continued)

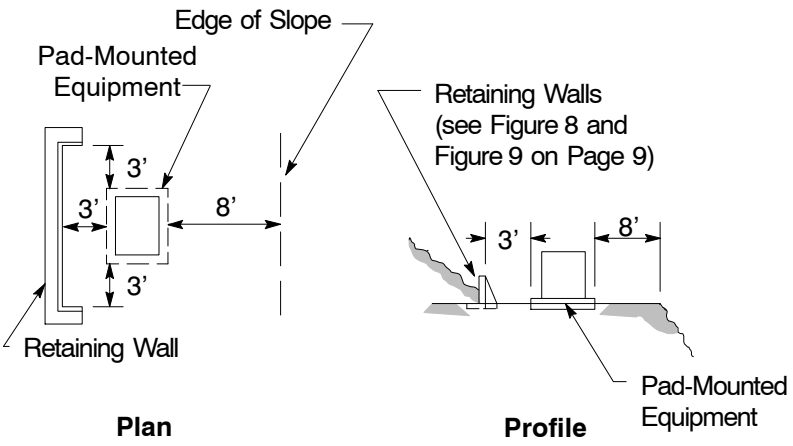

Figure 4
Example of Pad-Mounted Equipment (with front doors only) Installed on Sloped Terrain
(see Note 4.B on Page 4)

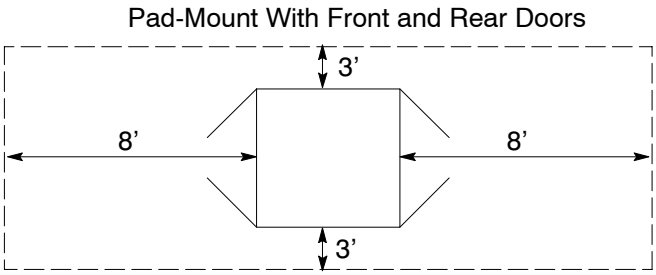

Figure 5
Work Space for Pad-Mounted Equipment
(with front and rear doors including most switches and capacitors)
(see Note 4.B on Page 4)

5. Hazardous Locations

Use the following guide when installing pad-mounted and subsurface equipment in areas where hazardous liquids and gases are dispensed or stored in sealed containers.

A. Liquified flammable gases**:** Do not install pad-mounted or subsurface equipment within 20 feet of a gas dispenser without conforming to the regulations concerning installation of electrical equipment in hazardous areas (refer to Articles E500-1, E500-2, E500-3, E514-1, and E514-2 of Title 24, Part 3, State Building Standards). Examples: Gas station fuel pump, convenience store propane pump.

B. Any container which stores flammable liquid or gas: These containers will be considered equivalent to "combustible walls". Therefore, the required clearances are the same as established in Note 2.A.a on Page 2 of this document. Examples: Emergency generator, propane tank at a house.

6. Spill Prevention Control and Countermeasure (SPCC) and Oil Containment

It is the customer's responsibility to comply with spill prevention and containment requirements for oil-filled electrical equipment in accordance with applicable laws, regulations, and ordinances. The Spill Prevention Control and Countermeasure (SPCC) regulations and the Uniform Fire Code (UFC) require the installation of containment structures to prevent spills and leaks of oil from reaching a waterway. SPCC requirements are found in the Code of Federal Regulations, Title 40, Part 112 and apply to facilities having a total quantity of oil exceeding 1,320 gallons. The requirements of UFC Articles 79 and 80 may also apply to containers and equipment holding more than 55 gallons of oil. These regulations include information on the type and size of the containment needed. Additional containment requirements may be mandated in local hazardous materials ordinances.

7. Future Construction

Consideration should be given not only to conditions existing at the time of installation but also to possible future structures and equipment that could interfere with required clearances or accessibility. On those installations where there is a high probability of a future obstruction, install a clearance requirement sign (Code 373998) on the equipment.

8. Noise Control

Transformer noise level increases with the kVA size. Avoid placing transformers alongside bedrooms and other places where noise may be objectionable.

9. Retaining Walls

A. Retaining walls are required when PG&E determines that it is necessary to protect equipment or enclosures against landslides, drainage wash, drifting sands, etc. The applicant is responsible for the installation and maintenance of the retaining walls and any associated safety rail. The retaining wall will be designed to provide a barrier of sufficient strength and suitable construction to provide adequate protection and working space around the enclosure or equipment. Typical examples of retaining wall placement are shown in Figure 3 and Figure 4 on Page 6 of this document.

B. Pre-approved retaining wall designs and materials are shown on Pages 8 and 9 of this document.

C. For retaining walls in excess of the dimensions shown on Page 8:

   a) The wall will be constructed of precast concrete, concrete poured in place, or concrete block.

   b) A safety rail of corrosion resistant material is required at the top of all retaining walls when wall height exceeds 4 feet (refer to Utility Standard SAFE-1012S for more information).

   c) The applicant will provide PG&E with a set of design drawings and structural calculations certified by a licensed civil engineer.

D. Treated redwood or pressure-treated Douglas fir posts (nominal 4" x 4" minimum) and planks (nominal 2 inches or thicker) may be used for short (1 foot or less) retaining walls. Posts should be 24 inches or less in length and extend at least 12 inches below ground and not more than 12 inches above ground (see Page 9).

E. The working area within the retaining wall shall be level.

   a) For pad-mounted equipment, it is to be slightly below the pad level (see the appropriate pad document for specific information).

   b) For subsurface enclosures, it is to be level with the enclosure.

F. The working area shall be kept weed free and covered with a locally acceptable decorative covering.

10. Precast Retaining Walls

Note

1. For drainage requirements, see Figure 9 on Page 9.

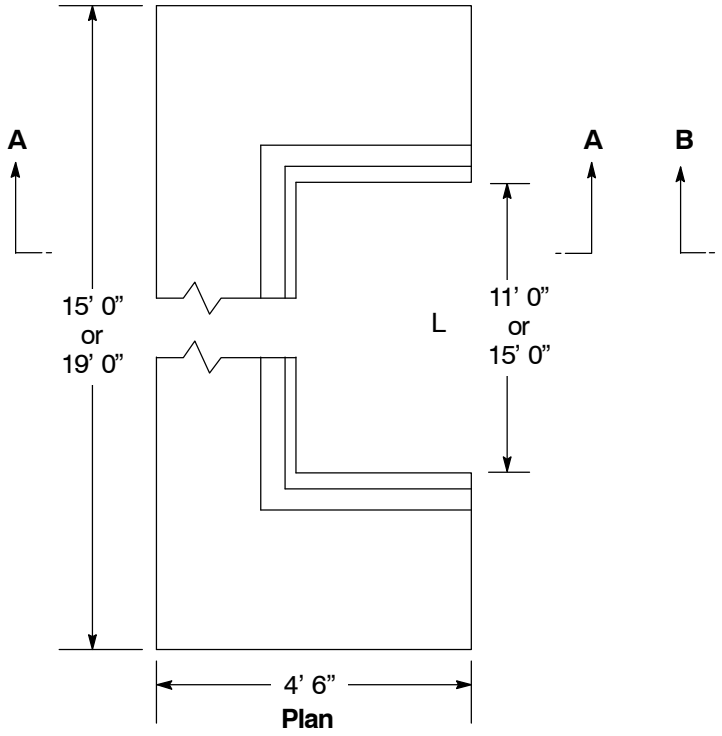

Figure 6
Concrete Poured in Place or Concrete Block Retaining Wall

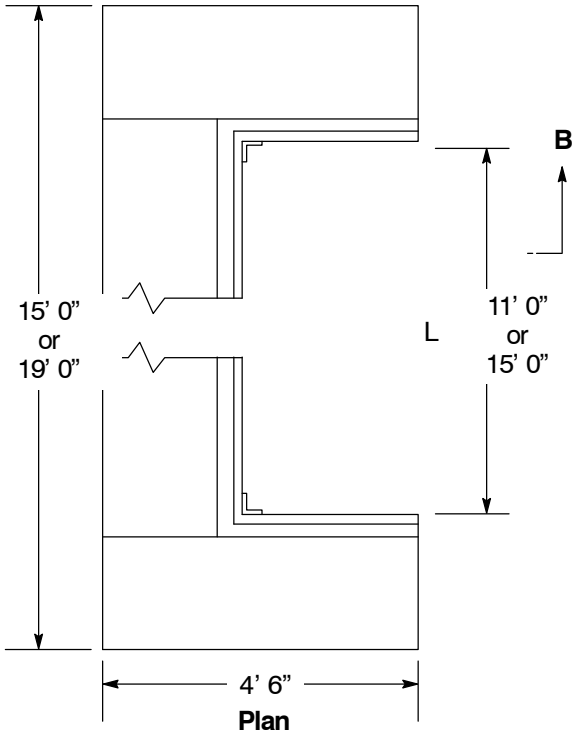

Figure 7
Precast Concrete Retaining Wall
(see Table 2 on Page 8)

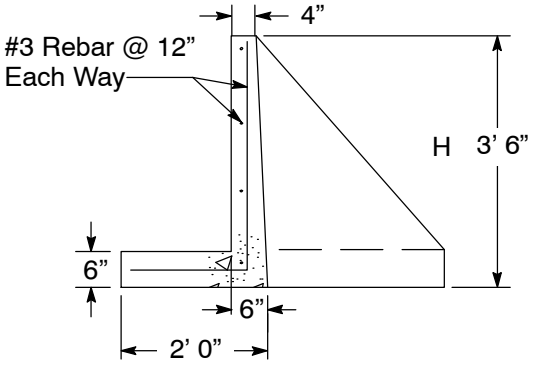

Section A-A

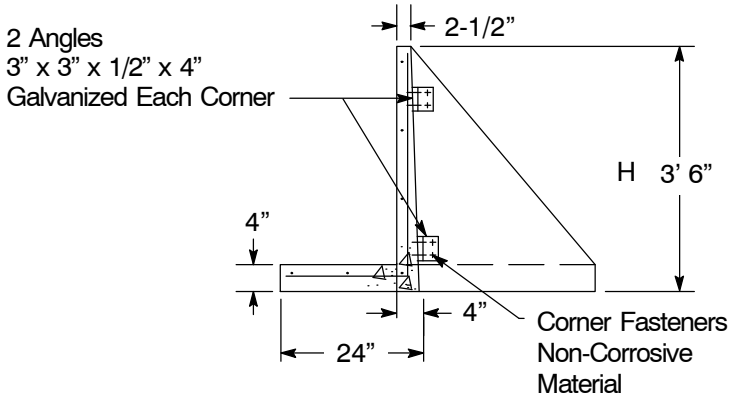

Section B-B

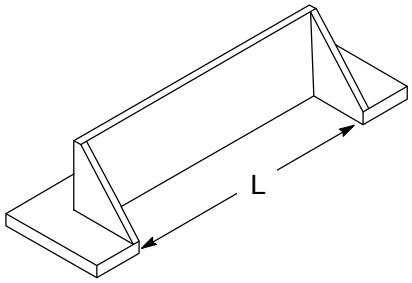

Table 2 Codes for Precast Retaining Walls

Dimension		Code [1]
L	H	
11' 0"	3' 6"	024881
15' 0"		024882

[1] See Document 066211 for approved suppliers.

Clearances and Location Requirements for Enclosures, Pads, and Underground Equipment

11. Wooden Retaining Walls and Drainage Details for All Retaining Walls

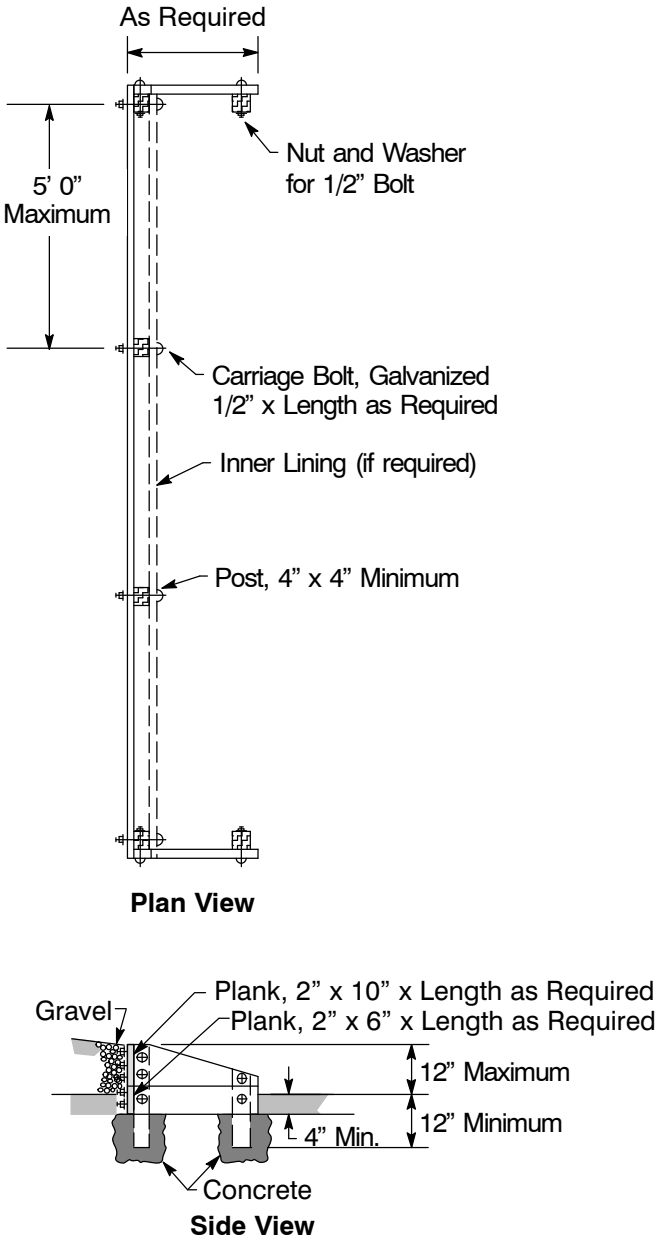

Figure 8
Wooden Retaining Wall

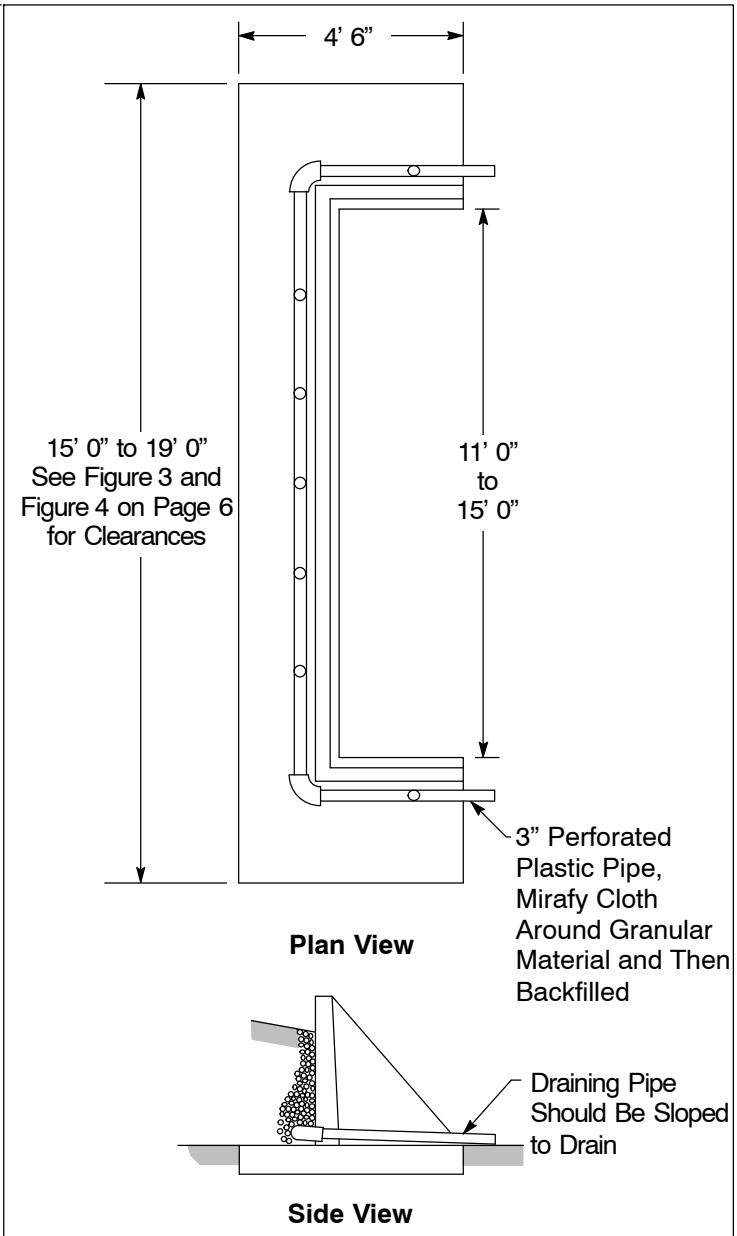

Figure 9
Drainage for All Types of Retaining Walls

12. Barrier Posts

A. Physical protection from vehicular traffic shall be provided in accordance with the level of vehicular exposure. Barrier posts, etc., are intended to provide reasonable warning from accidental vehicular contact, rather than to prevent all possible contact. When PG&E determines it necessary, the applicant will provide acceptable physical protection.

B. In general, pad-mounted equipment having the following setbacks do not require the customer to provide any other physical protection.

a) Single-family, duplex, and other low density residential areas: 3-foot minimum from the edge of the thoroughfare pavement due to low vehicular traffic (see *G.O. 128, Rule 23.6* for definition of thoroughfare).

b) Commercial, apartment, condominium, and other high density areas: 9 feet from the edge of the thoroughfare pavement due to high vehicular traffic and frequent truck-backing.

The design of the particular layout may, of course, call for an increase or decrease in these dimensions. For example, a 3-foot setback is often adequate for parts of commercial parking lots where traffic flow is constrained and backing perpendicular to the curb is unlikely.

C. The posts shown in this document are the standard means for providing such physical protection. Suitable alternatives to these protective posts may be proposed by the applicant for PG&E's approval.

D. All barrier posts at the same installation site will be the same height.

E. A building wall can be considered as physical protection provided it is located at a point where a post would be normally required.

F. Maintain 36" minimum clearance between barrier posts and the edge of the pad in front of the equipment doors so that they do not interfere with opening the doors.

G. Certain types of pad-mounted equipment have doors in both front and back and require 36" minimum clearance to the pad on both sides.

H. Use removable posts when:

a) Posts are installed less than 8 feet in front of the equipment's doors, or

b) Where fixed posts would obstruct access for installation or replacement of equipment.

I. Preferred barrier post arrangements for specific equipment are provided in Figure 11 on Page 12 to Figure 23 on Page 24. These may be modified as needed, to meet specific layouts, but must conform to the requirements in Figure 10 on Page 11.

J. Barrier post details are shown in Figure 24 on Page 25 to Figure 30 on Page 27.

12. Barrier Posts (continued)

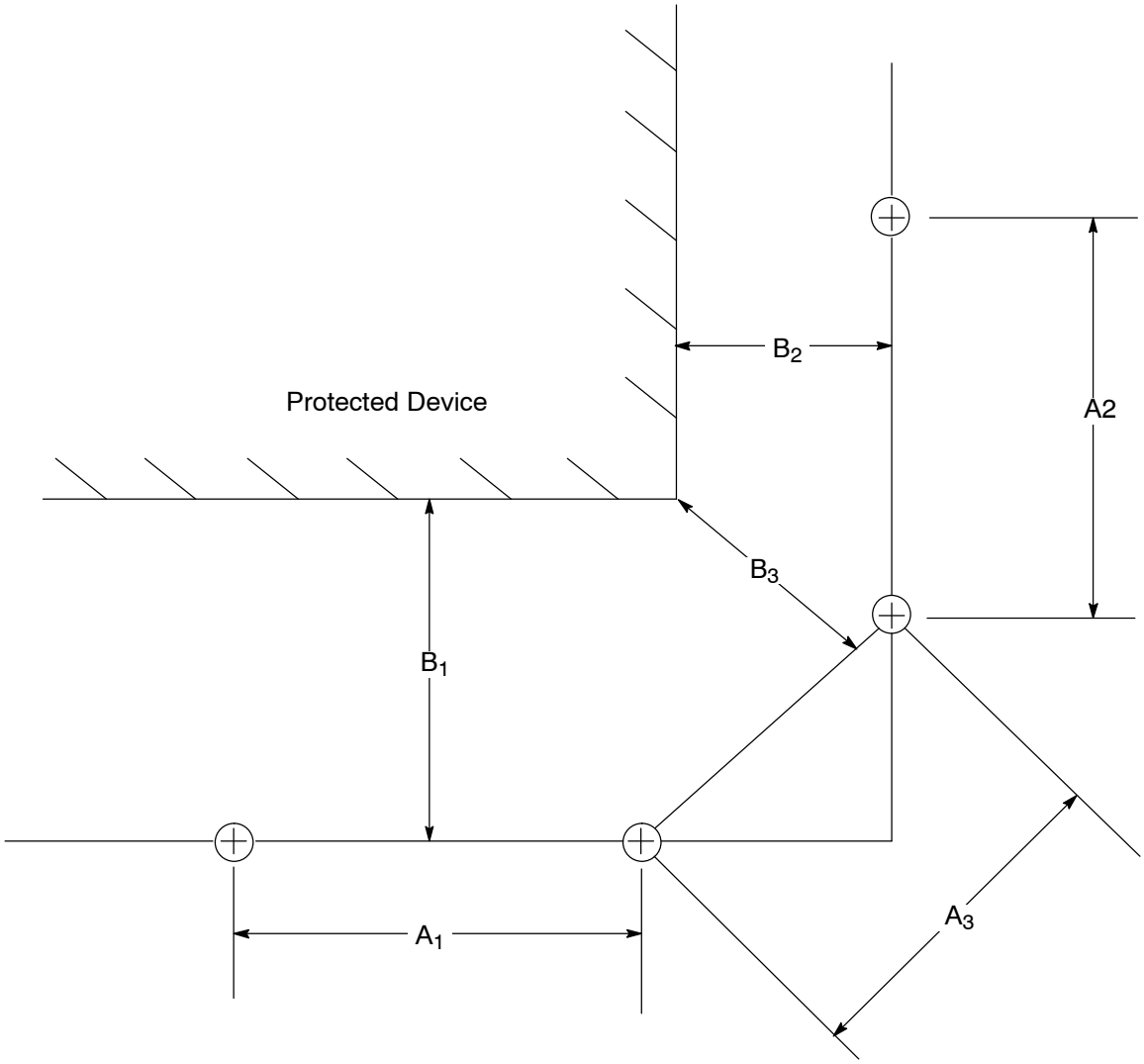

A = Distance Between Posts in Inches
B = Shortest Distance Between the Protected Device and the Line Between Barrier Posts

Figure 10
Generic Barrier Post Placement

Requirements

1. “A” must be less than or equal to 42 inches.
2. “B” must be greater than or equal to 12 inches on non-operable sides.
3. “B” must be greater than or equal to 36 inches on operable sides.
4. B_n must be greater than or equal to $(A_n/2)+3$.

Table 3 Common A and B Pairs

“A” (inches)	“B” (inches)
18	12
24	15
30	18
42	24
42	36

13. Preferred Barrier Post Arrangement for Transformers

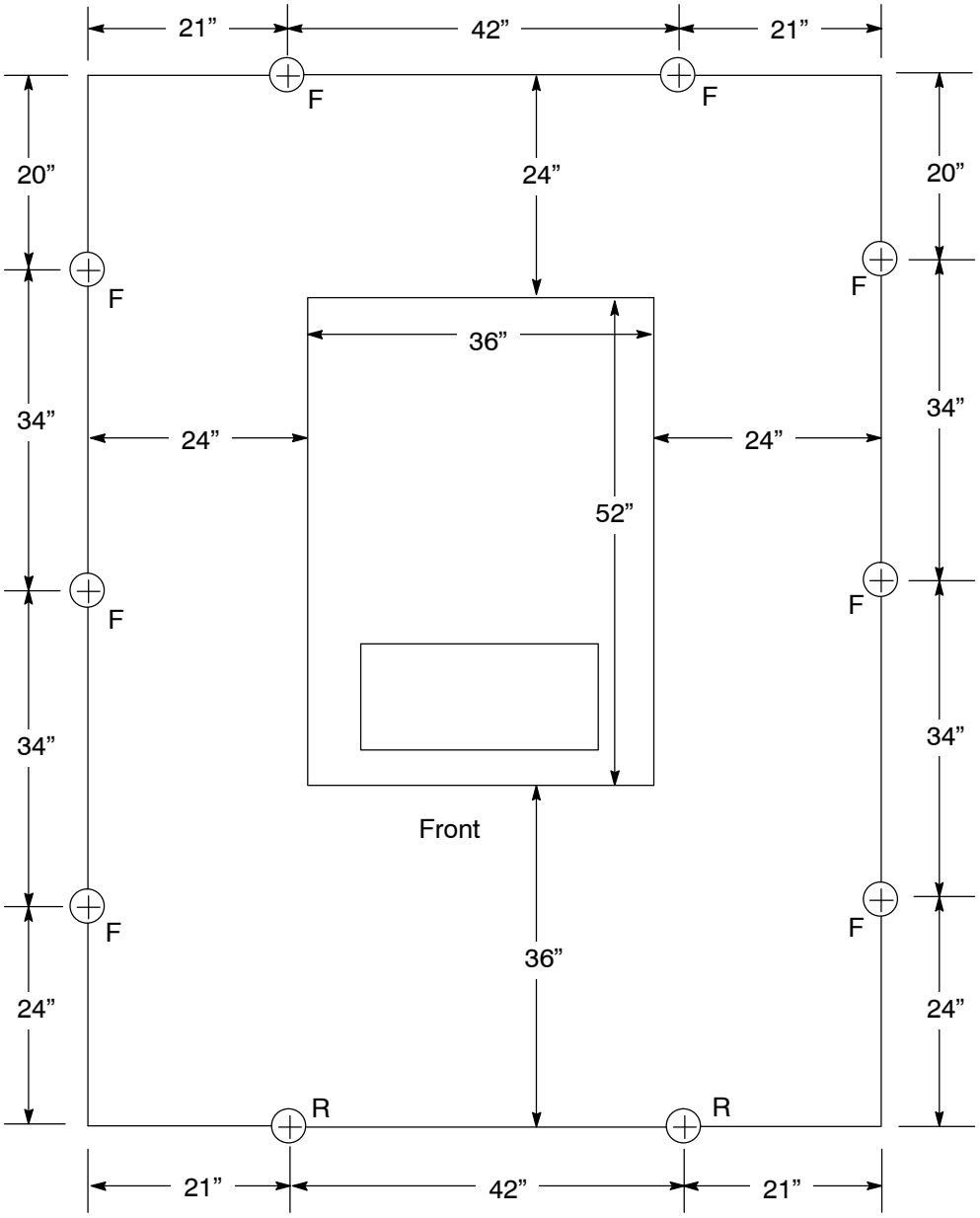

Figure 11
Style DF-LB Box Pad
36” x 52”
(Document 064309)

F = Fixed
R = Removable

13. Preferred Barrier Post Arrangement for Transformers (continued)

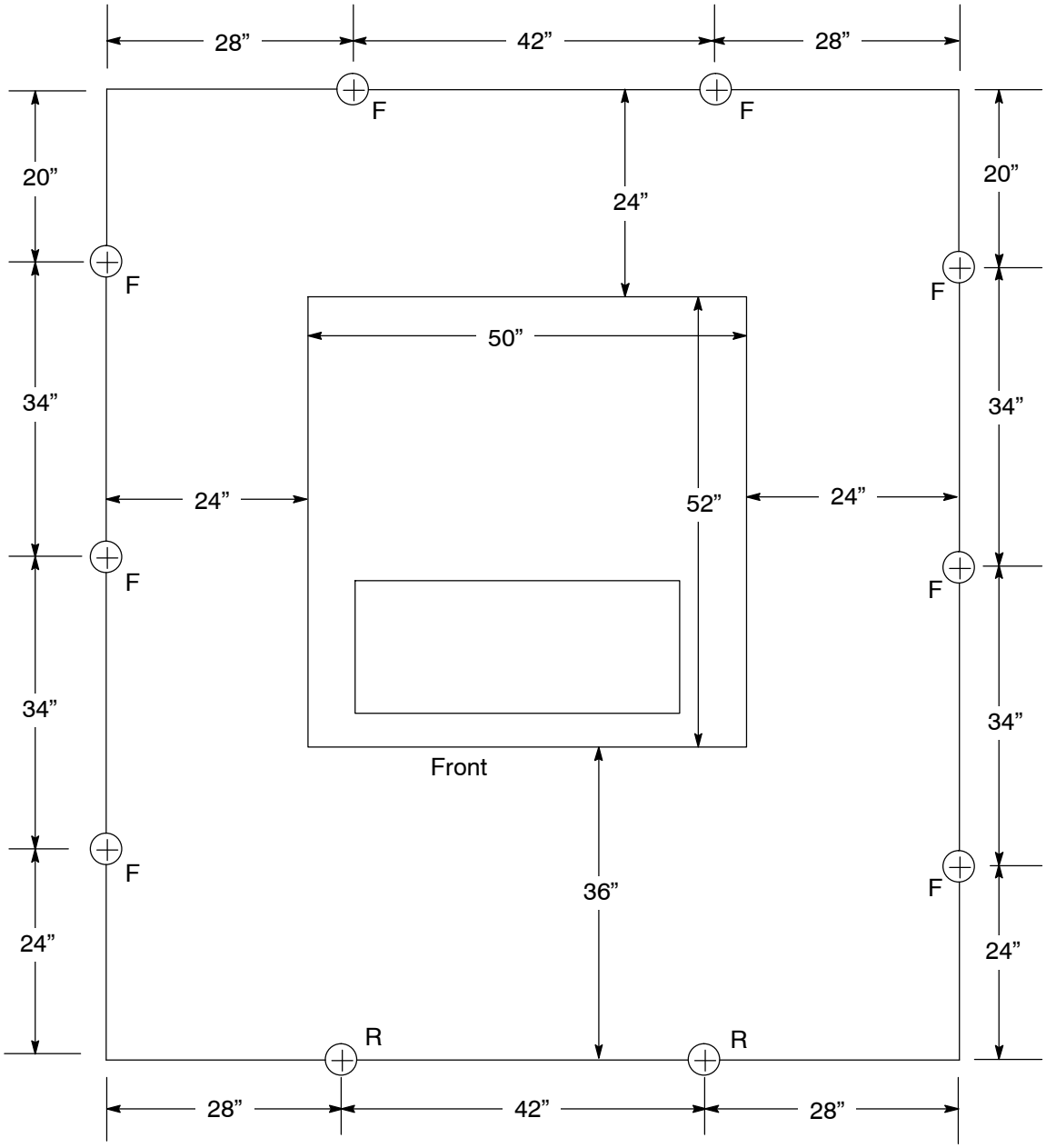

Figure 12
Style DF-LB Box Pad
50” x 52”
(Document 064309)

F = Fixed
R = Removable

13. Preferred Barrier Post Arrangement for Transformers (continued)

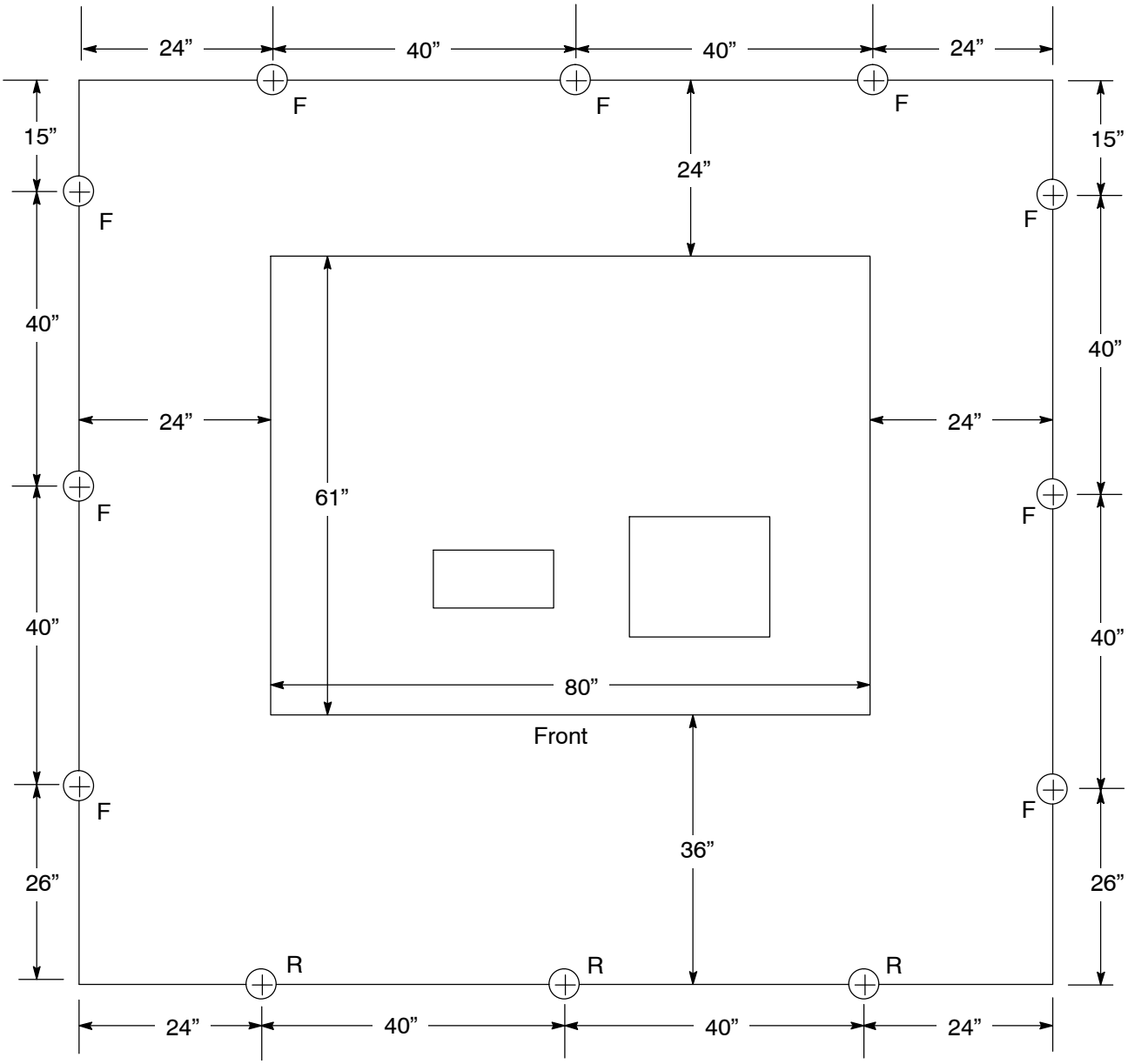

Figure 13
Style IIE-LB Pad
80” x 61”
(Document 045292)

F = Fixed
R = Removable

13. Preferred Barrier Post Arrangement for Transformers (continued)

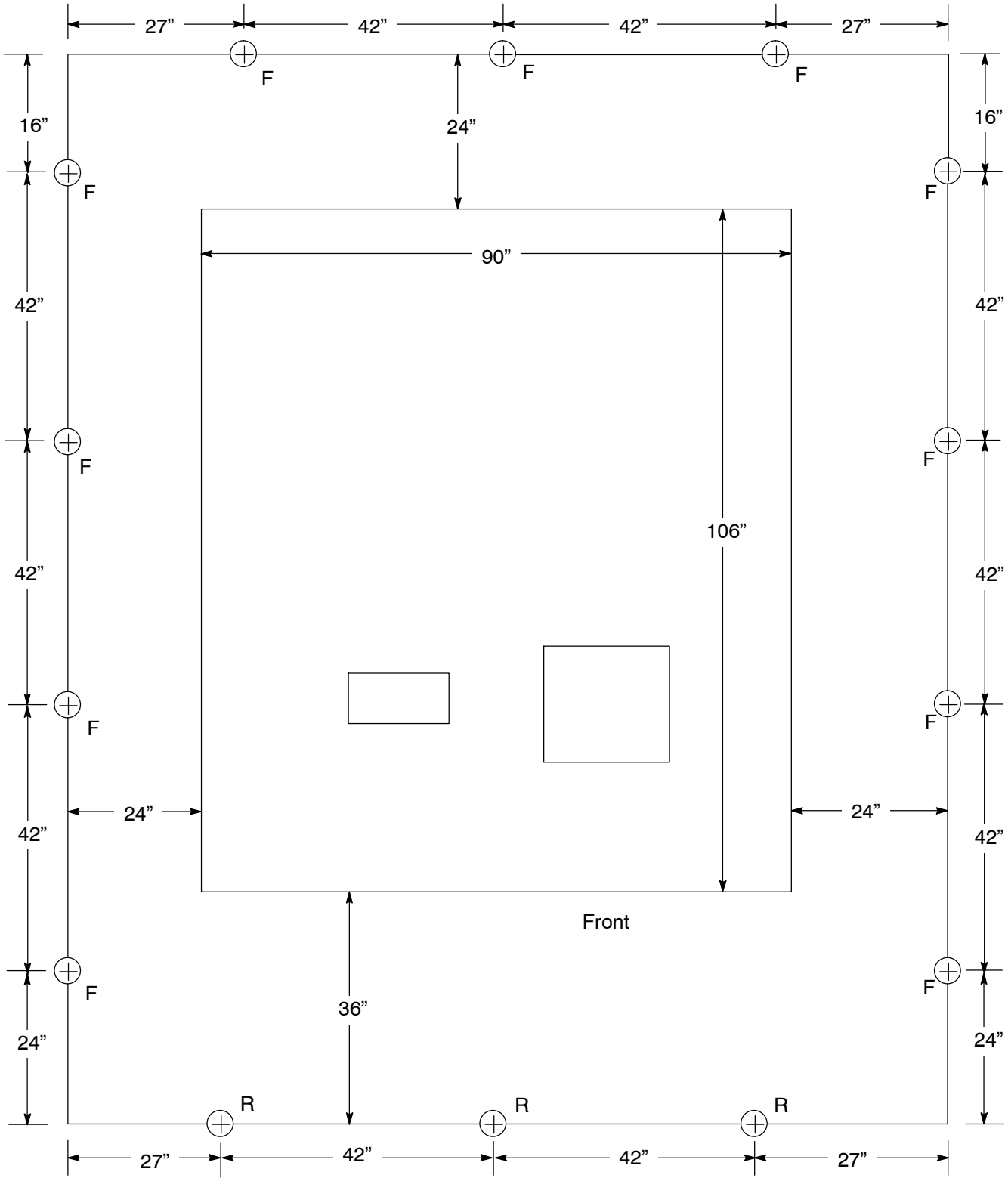

Figure 14
Style IIE-LB Pad
90” x 106”
(Document 045292)

F = Fixed
R = Removable

14. Barrier Posts for Capacitors

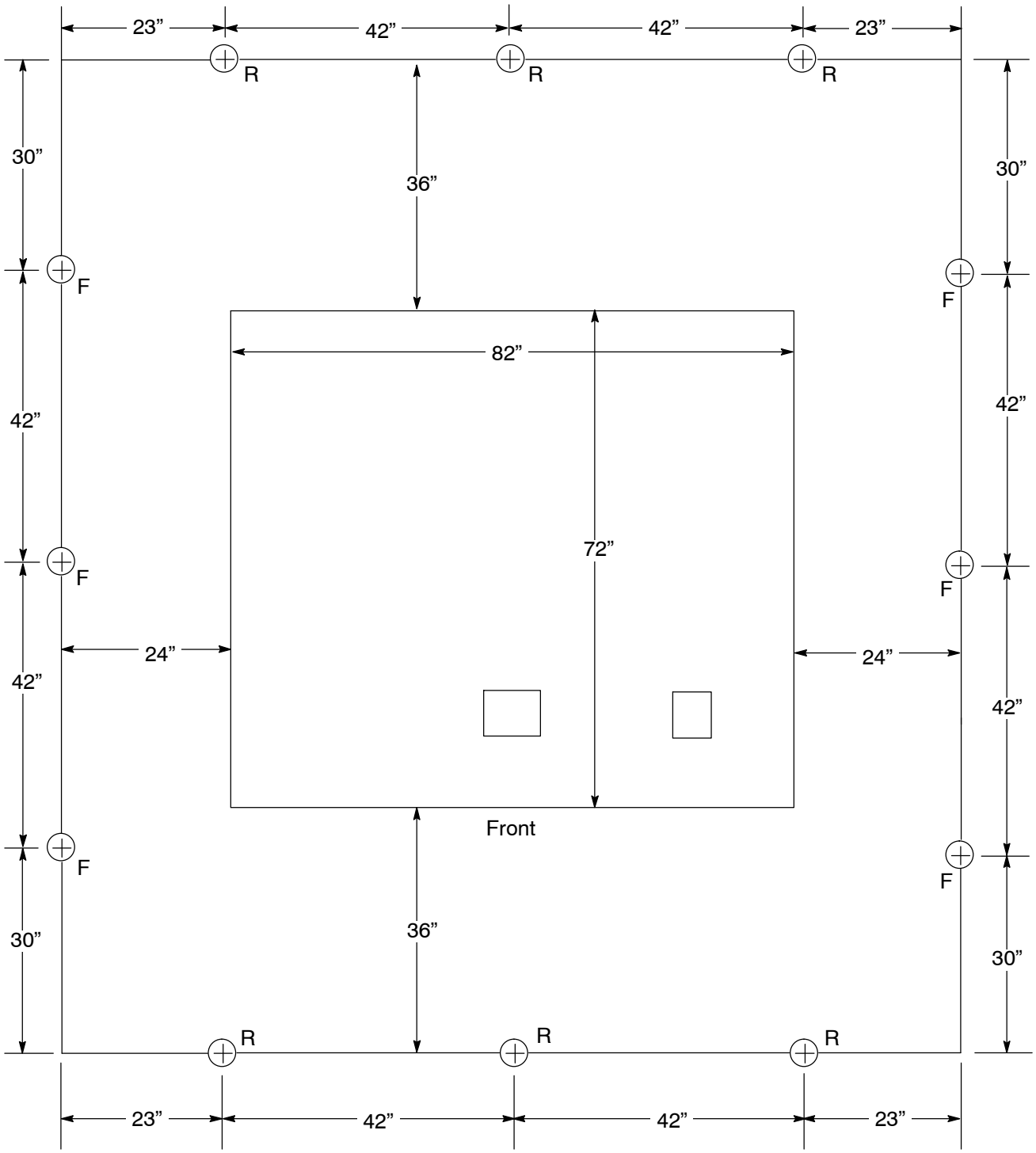

Figure 15
Pad-Mount Capacitor
82” x 72”
(Document 066197)

F = Fixed
R = Removable

15. Barrier Posts for J-Boxes

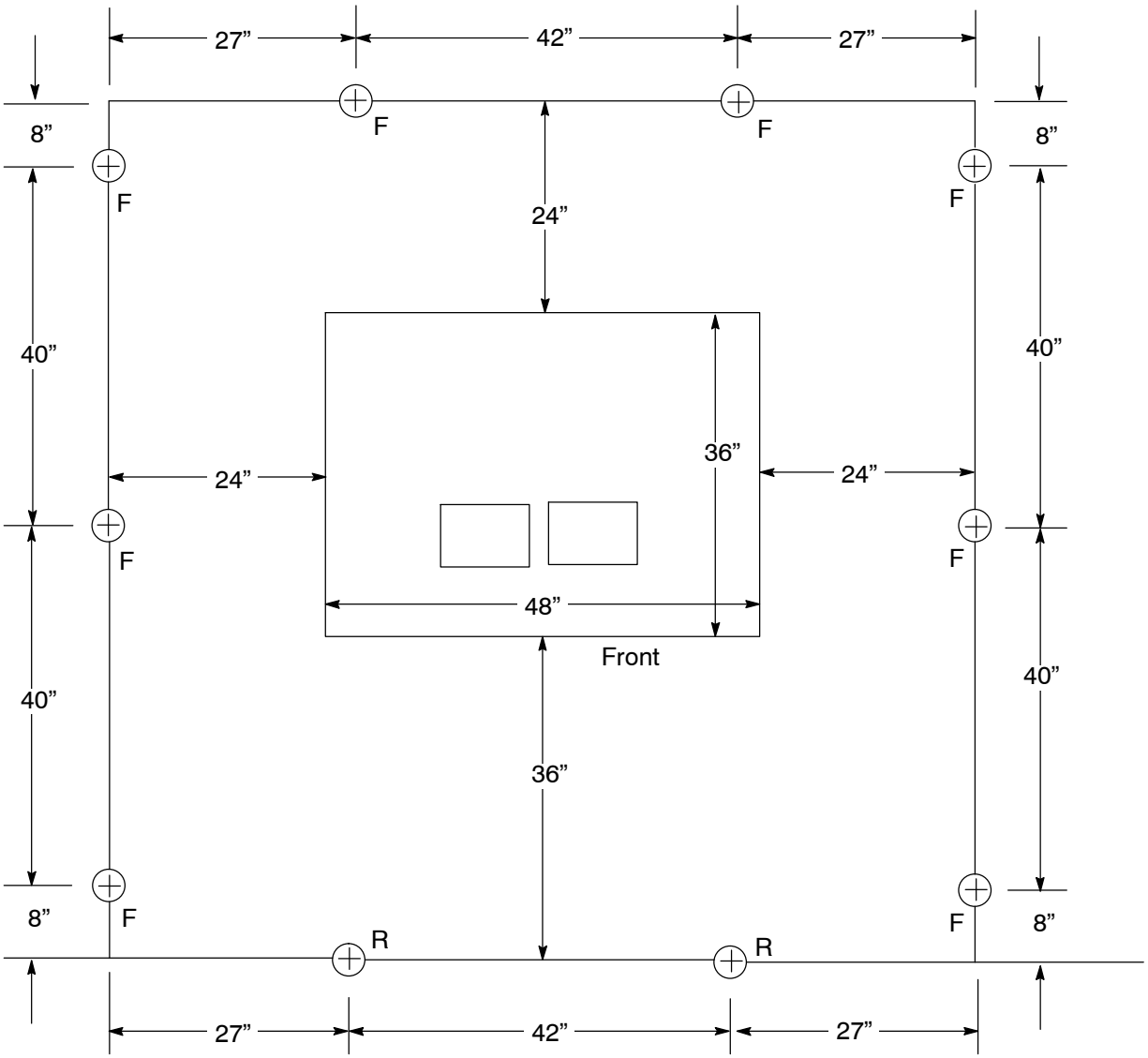

Figure 16
1-Wire, Pad-Mounted Junction
48” x 36”
(Document 066212)

F = Fixed
R = Removable

15. Barrier Posts for J-Boxes (continued)

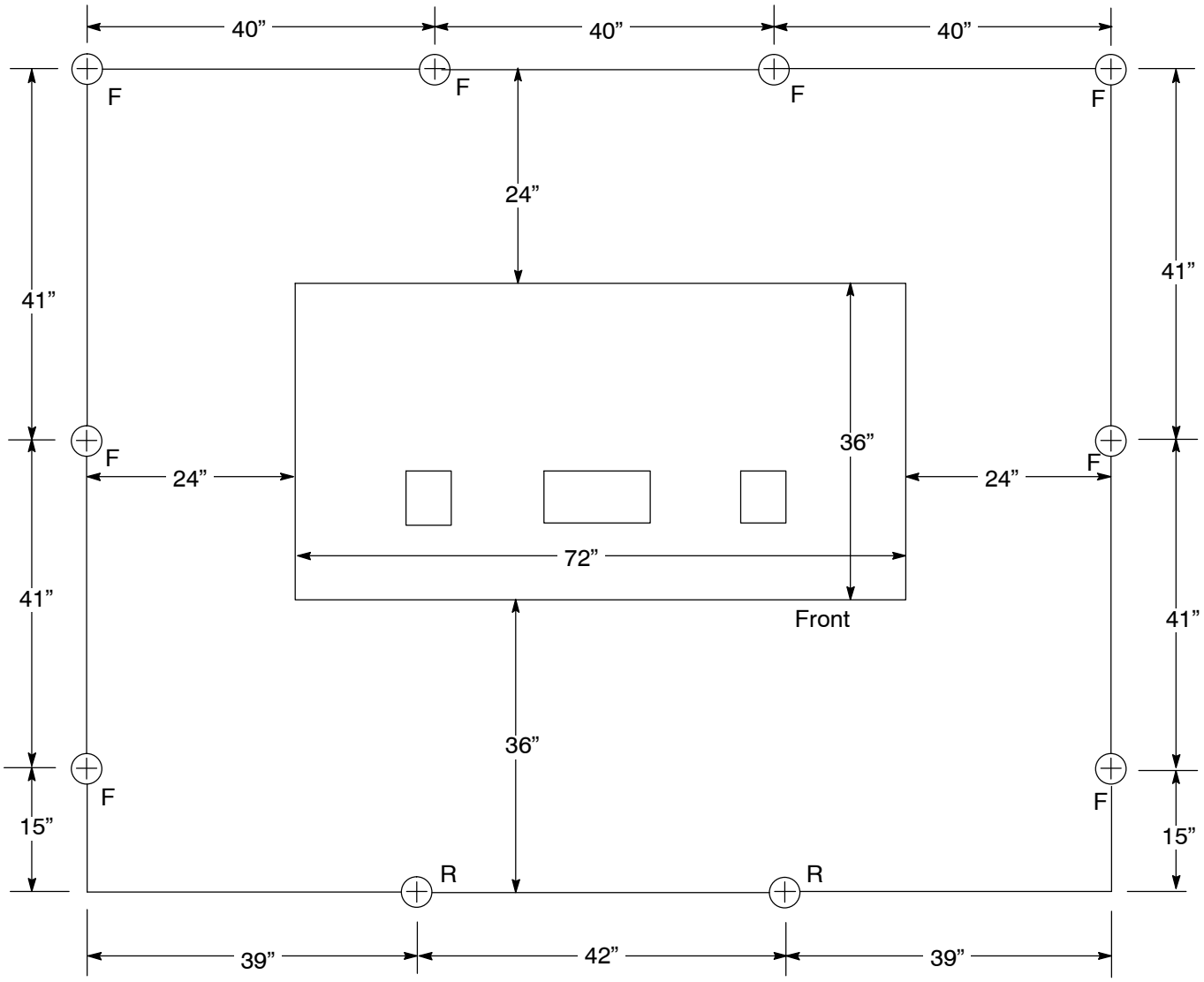

Figure 17
2- or 3-Wire Pad-Mounted Junction
72” x 36”
(Document 066212)

F = Fixed
R = Removable

16. Barrier Posts for PMH Switch

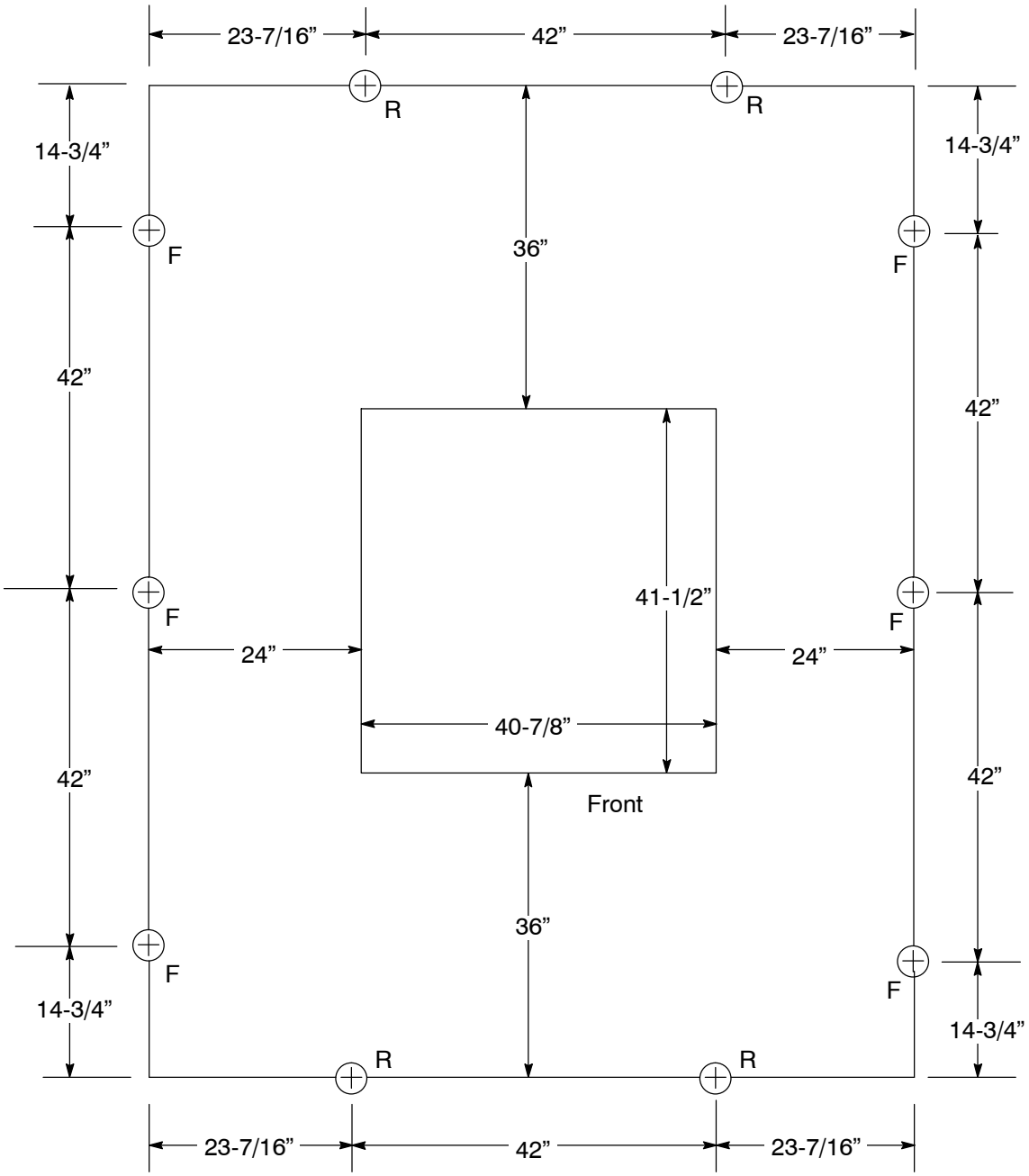

Figure 18
PMH Switchgear
40-7/8” x 41-1/2”
(Document 053318)

F = Fixed
R = Removable

16. Barrier Posts for PMH Switch (continued)

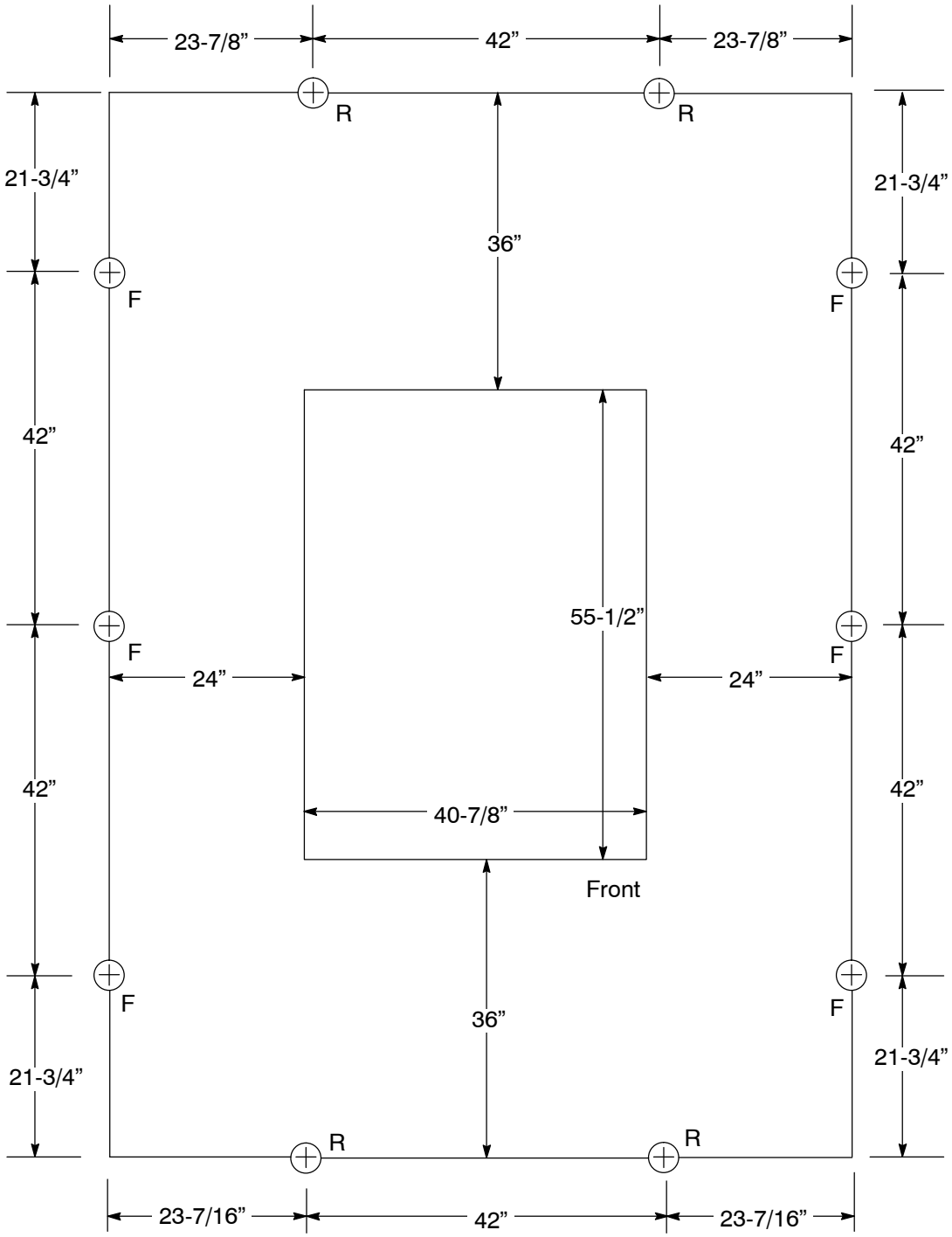

Figure 19
PMH Switchgear
40-7/8” x 55-1/2”
(Document 053318)

F = Fixed
R = Removable

16. Barrier Posts for PMH Switch (continued)

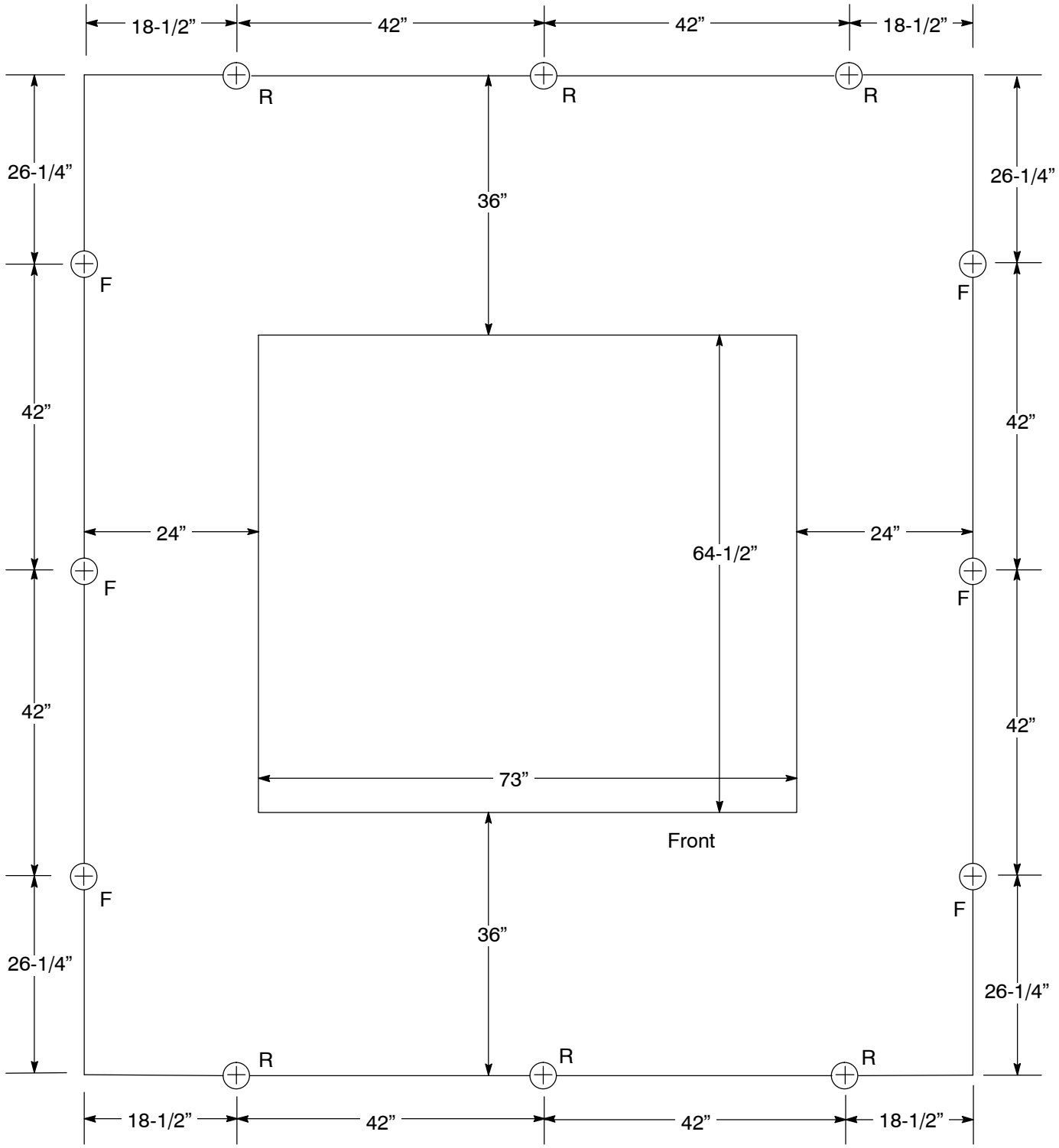

Figure 20
PMH Switchgear Pad
73” x 64-1/2”
(Document 053318)

F = Fixed
R = Removable

16. Barrier Posts for PMH Switch (continued)

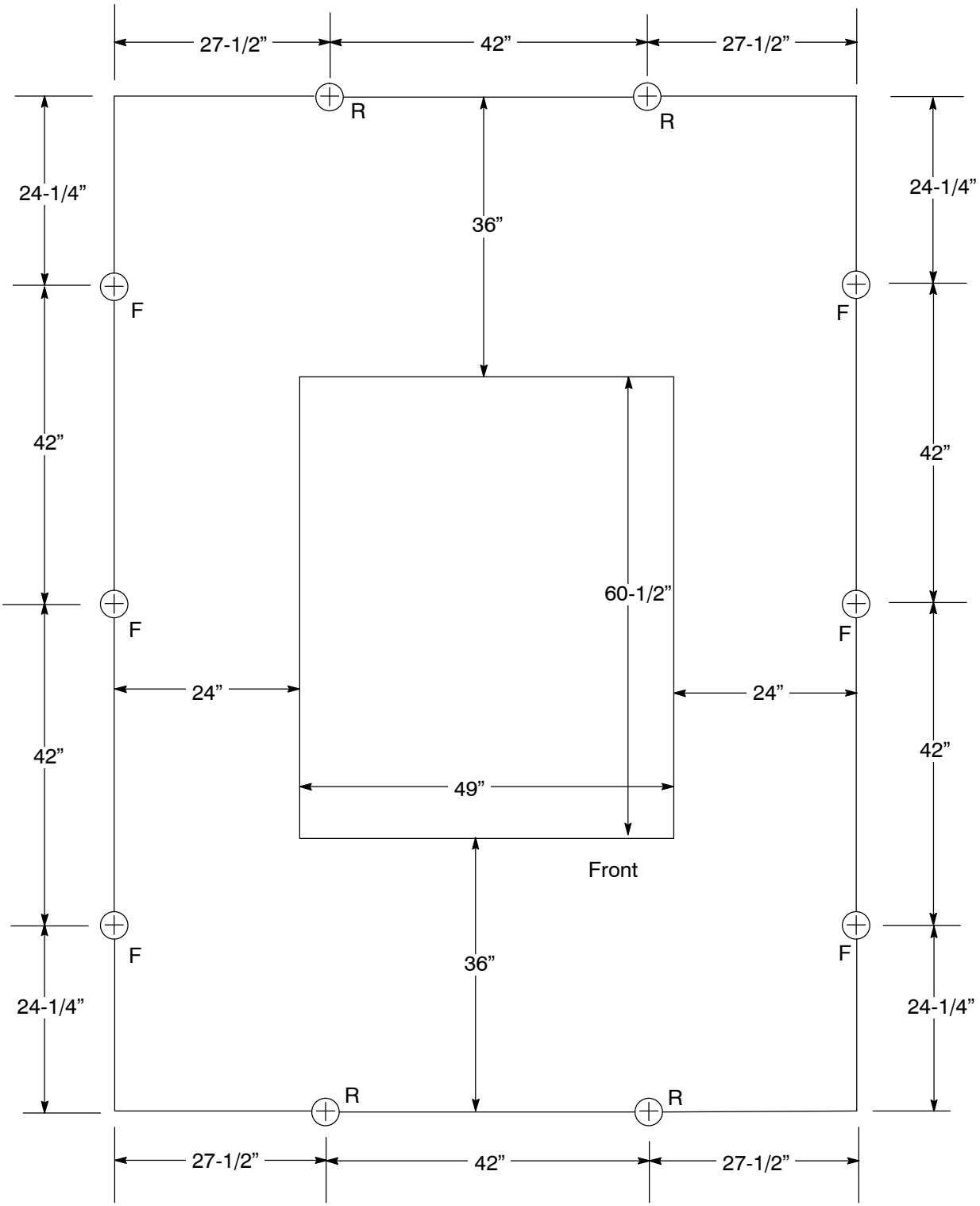

Figure 21
PMH Switchgear Pad
49” x 60-1/2”
(Document 053318)

F = Fixed
R = Removable

16. Barrier Posts for PMH Switch (continued)

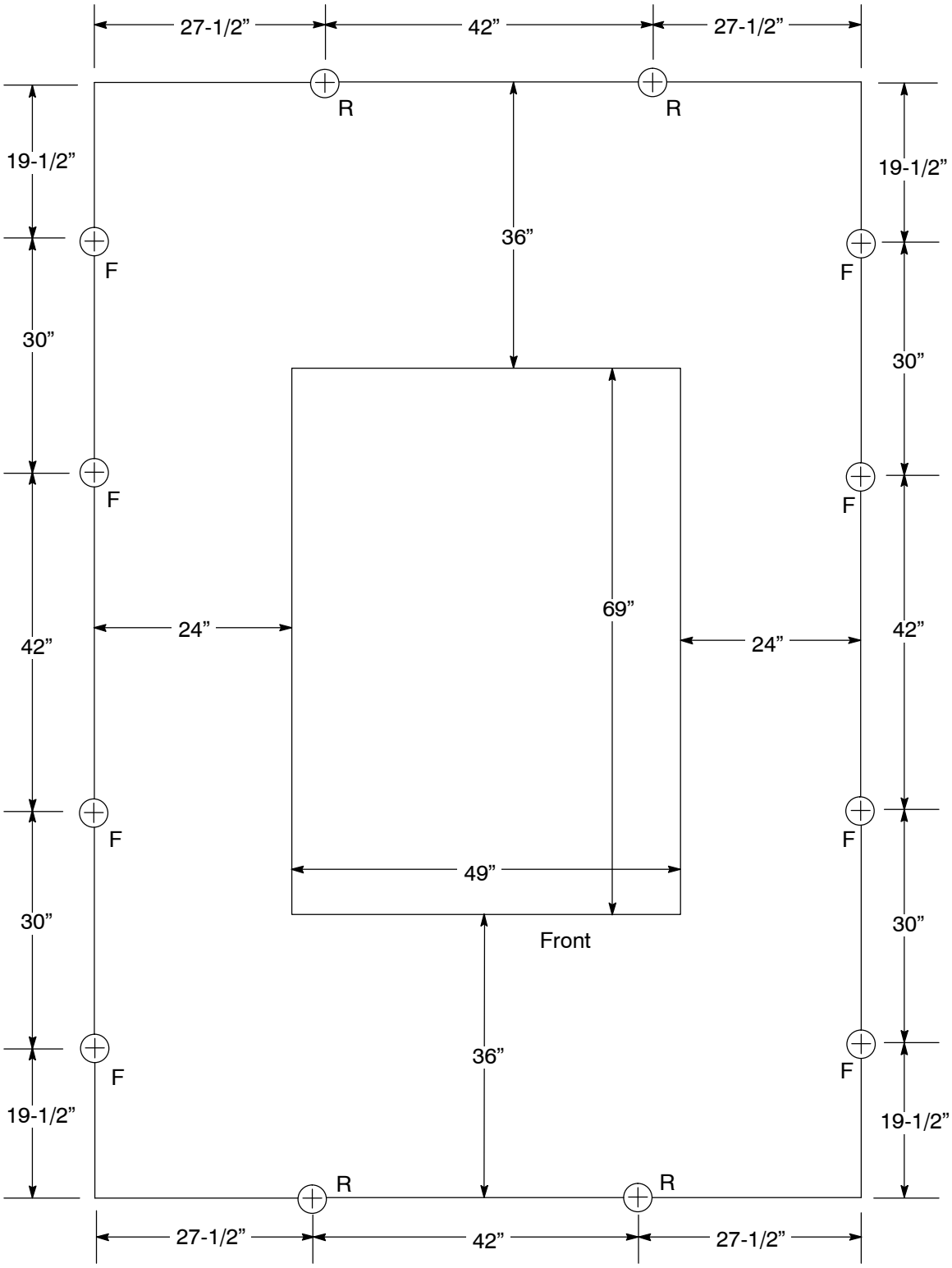

F = Fixed
R = Removable

Figure 22
PMH Switchgear Pad
49” x 69”
(Document 053318)

16. Barrier Posts for PMH Switch (continued)

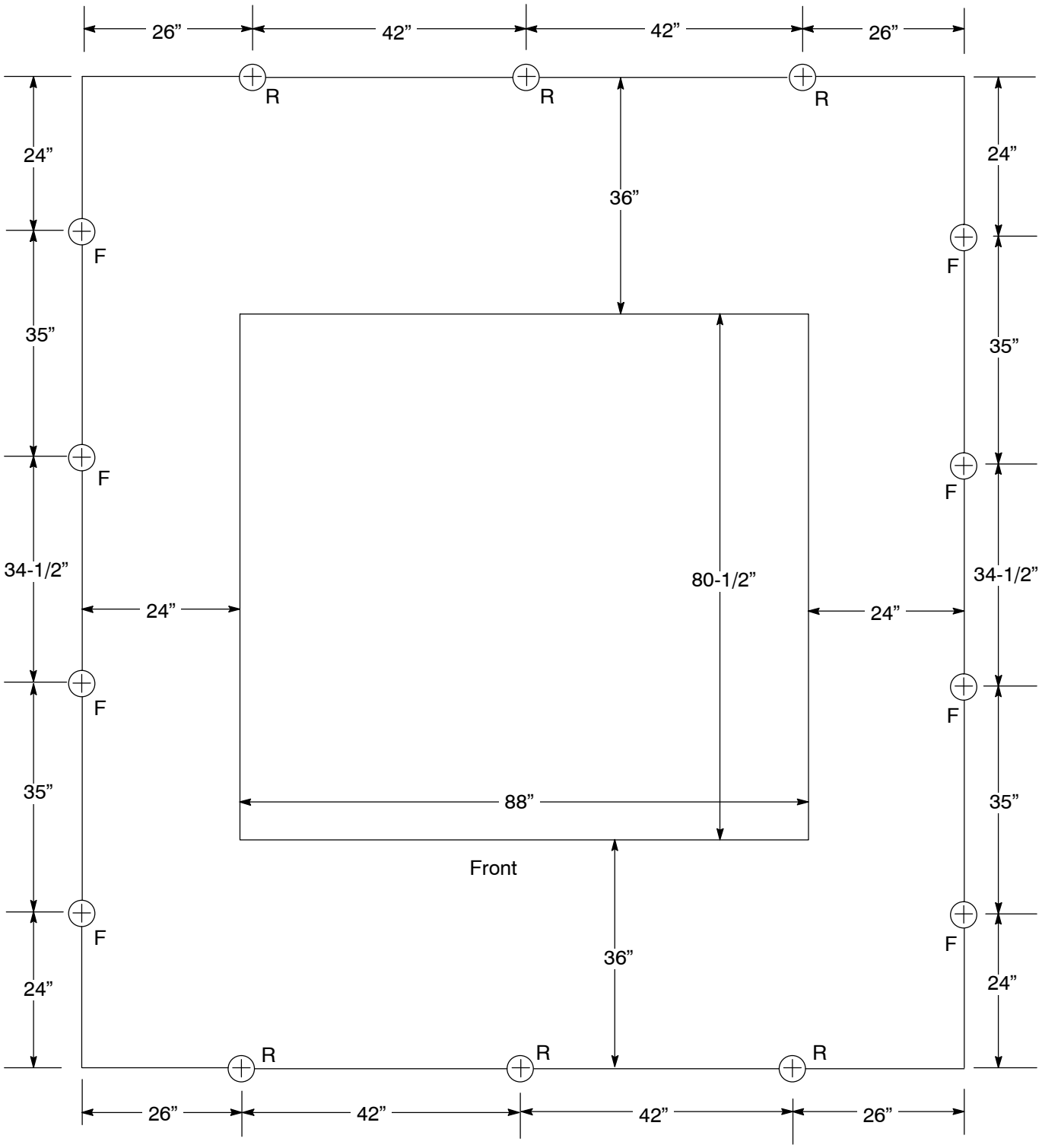

Figure 23
PMH Switchgear Pad
88” x 80-1/2”
(Document 053318)

17. Placement of Metal Barrier Posts and Details

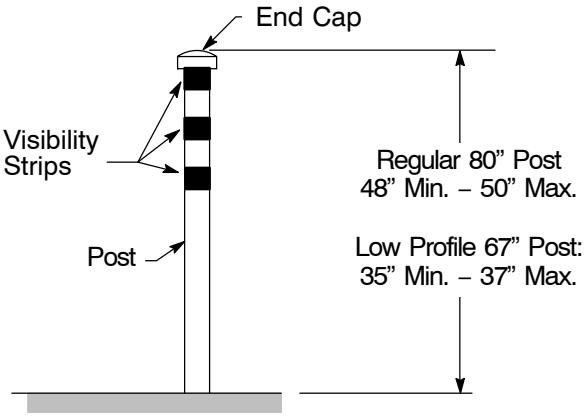

Figure 24
Steel Barrier Post
(see Table 4)

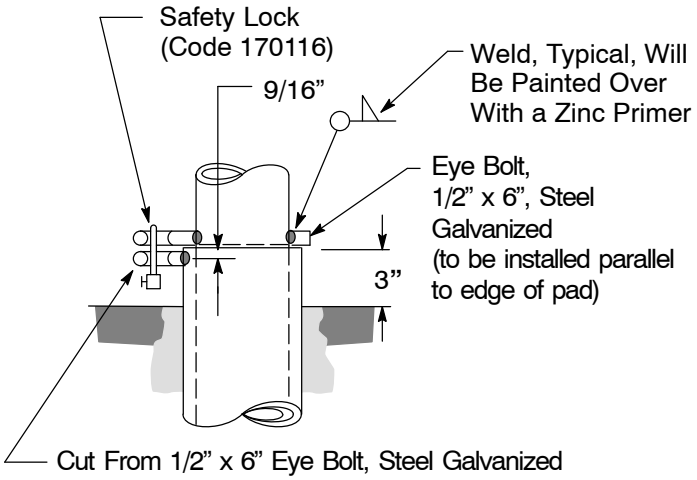

Detail A
(see Figure 26)

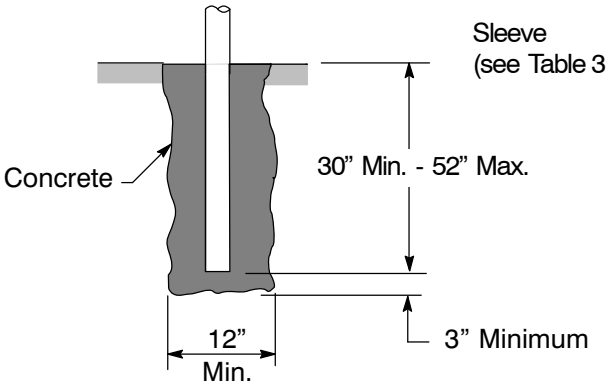

Figure 25
Footing for Fixed Steel Post Detail
(see Table 4)

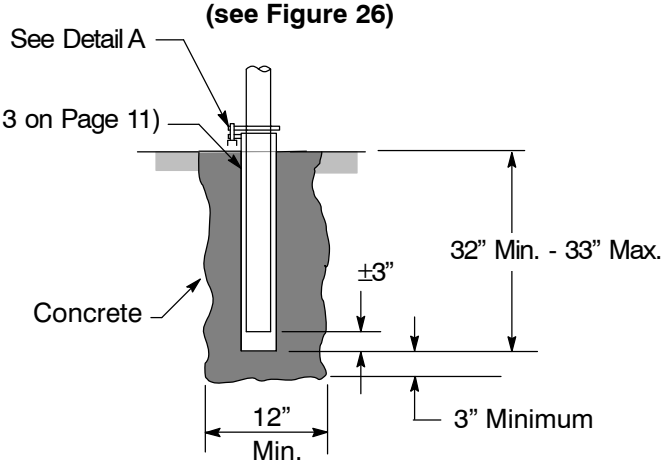

Figure 26
Footing for Removable Steel Post Detail
(see Table 4)

Table 4 Description and Codes for Steel Barrier Posts [1]

Description	Length (inches)	Code	Doc
Galvanized Fixed Post, 4”, Steel Pipe, Standard, Schedule 40	80	155107	–
	67 [2]	155108	–
Removable Post, 4”, Galvanized Steel Pipe, Standard, Schedule 40 With 5” Galvanized Steel Pipe Sleeve, 36” Long, Standard, Schedule 40	80	155105	–
	67 [2]	155106	–
Replacement 4” Removable Barrier Post Galvanized Steel Pipe With Cap Less Sleeve and Eye Bolt	67	150265	–
	80	150266	–
End Cap, 4”, Galvanized Malleable Iron, May Be Screwed	–	021882	–
Strip, Visibility Reflective Yellow Adhesive Sheet, 2” X 12”, Pacific Utilities #PEM212F, Almetek #DL-RY2X12-A	–	013163	022168
Safety Lock	–	170116	–

1 Posts fabricated from 20-foot lengths of galvanized steel pipe, Code 011794.
2 67” post length is for single-phase transformer.

17. Placement of Metal Barrier Posts and Details (continued)

Figure 27
Security Cover for Removable Post Lock
Material Code 150271

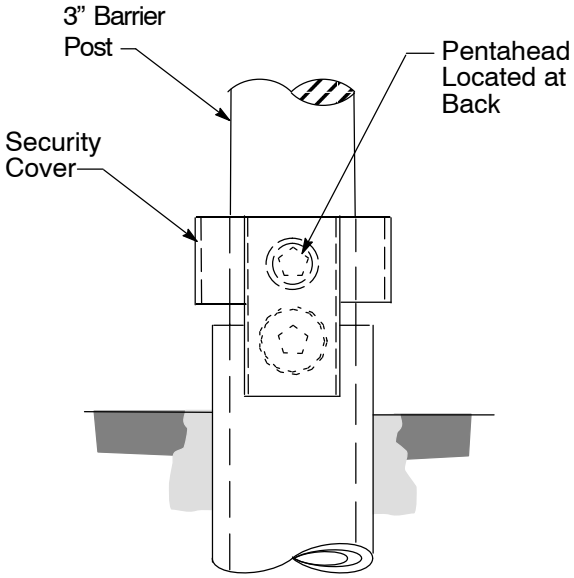

Detail B
See Figure 27

Installation of Security Cover:
1. Remove Top Cap.
2. Slide Collar Down Over the Eyebolts Locked Together.
3. Drill Hole for Bolt.
4. Insert and Engage Pentahead Bolt.

18. Residential and Light Commercial Non-Metallic Barrier Post

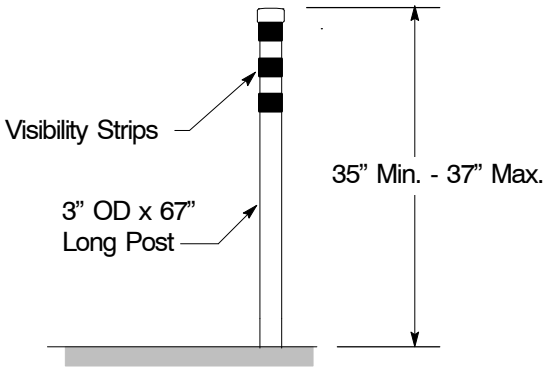

Figure 28
Non-Metallic Barrier Post
(see Table 5)

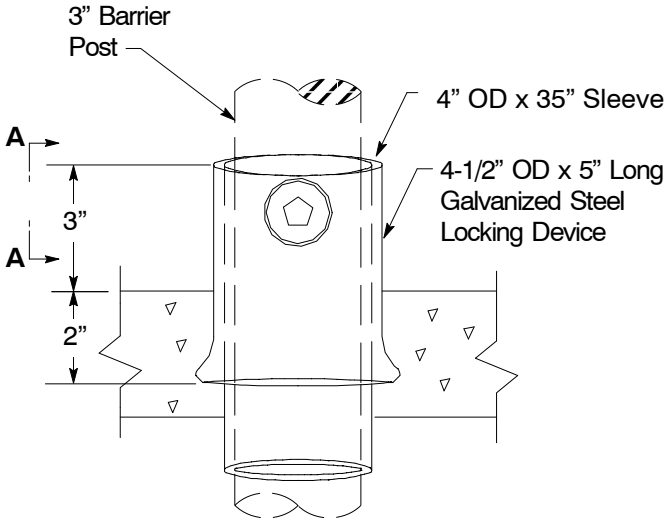

Detail C
See Figure 30

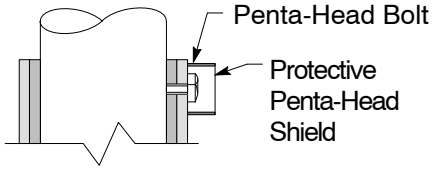

Section A-A

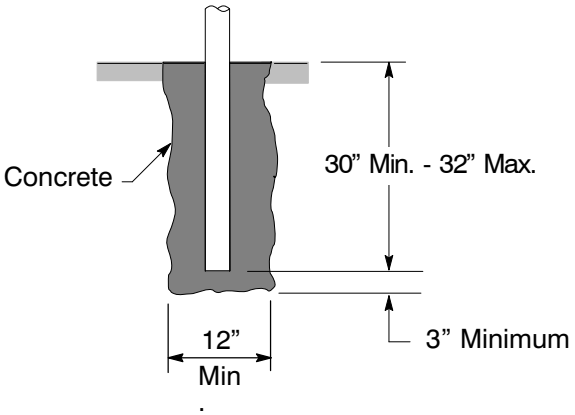

Figure 29
Footing for Fixed Non-Metallic Post

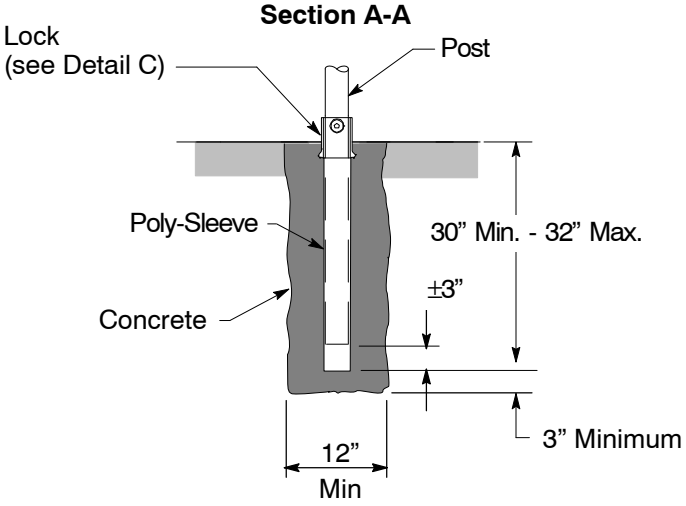

Figure 30
Footing for Removable Non-Metallic Post Kit
(see Table 5)

Table 5 Description and Codes for Non-Metallic Barrier Posts

Description	Allwire	Code
Fixed Post: 3” OD x 67” Long, 1-3/4” Fiberglass Core With 5/8” Polyethylene Cover	FGP674	150553
Removable Post Kit: 4” OD x 35” Long Polethylene Sleeve, 4-1/2” OD x 5” Long Galvanized Steel Locking Device and 1/2” x 1-1/4” Penta-Head Bolt	RPK001	150554
Security Cover for Removable Post Lock	–	150271

Clearances and Location Requirements for Enclosures, Pads, and Underground Equipment

Revision Notes

Revision 21 has the following changes:

1. Revised Table 1 on Page 4.

Prepared by: ABB1

ELECTRICAL SERVICE REQUIREMENTS FOR MOBILE HOME DEVELOPMENTS

052521

Asset Type:	Electric Metering	**Function:**	Construction
Issued by:	Quoc Hoang (QxH1)	**Date:**	07-01-16

Rev. #06: This document replaces PG&E Document 052521, Rev. #05. For a description of the changes, see Page 10.

This document is also included in the following manuals:

- *Electric Meter Work Practices*

Purpose and Scope

This document shows methods of supplying underground electric service to meter equipment (pedestal) serving mobile homes in accordance with Electric Rule 15 and Electric Rule 16 for a park that qualifies as a mobile home development as defined by PG&E. Additionally refer to PG&E's Electric and Gas Service Requirements manual (Greenbook) for additional requirements that may not be listed in this document.

Note: In accordance with Title 25, Article 7, Sections 1322, 1333, and 1333.5, mobile homes installed on foundation systems in locations other than mobile home parks, may be served by PG&E from overhead or underground service to the customer's equipment (service entrance conductors if overhead), which is attached directly to the mobile home. Refer to PG&E Document 063927 for underground service requirements and Documents 025202 and 022169 for overhead service requirements.

Instructions

1. The developer or his contractor shall provide all necessary trenching, secondary and service conduit (when required), and shall be responsible for the location and final grade of the utility islands
2. The required location for the meter equipment is at the front of the mobile home (see Figure 1 on Page 4). Alternate locations for the meter pedestal are indicated by the shaded areas in Figure 1 on Page 4.
3. PG&E shall install the secondary and service lateral cables in accordance with current engineering standards and construction methods.
4. Maintain a 36-inch (minimum) work space clearance from the meter face and from any access panel to PG&E facilities on the enclosure. Maintain a 36-inch (minimum) clearance from the meter equipment to other utility equipment such as gas, water or sewer. Refer to the National Electrical Code and the Authority Having Jurisdiction for the allowed working space requirements and if the 36-inch (minimum) clearance shown in Figure 3 and Figure 4 on Page 5 may be reduced to 12 inches for pedestal designs which have the meter and all access panels (both PG&E's and customer's) located on the same side of the pedestal.
5. After PG&E has installed the cable, and if required, the spare conduit in the trench, the developer or his contractor shall then:
   A. Set the electric meter pedestal in place over the cable and conduit. Position the pedestal so the meter socket faces as shown on Page 5. Remove the pull section panel from the pedestal to allow the cable to extend out of the pedestal. Maintain the work space and clearances as described in Note 4.
   B. Install and connect a copper grounding conductor from the pedestal grounding lug to an N.E.C. approved ground electrode system. The grounding connection shall not be made to a gas piping system. The customer shall be responsible for bonding and grounding all exposed non-current-carrying metal parts in accordance with the applicable electric codes and local ordinances. PG&E prefers, but does not require, the grounding electrode conductor wire to be protected against physical damage by rigid steel conduit or armored cladding.

C. Bond the service neutral termination lug to the meter pedestal by means of a bonding screw, or by continuing the grounding conductor between the grounding lug and the neutral lug.

D. Backfill around the pedestal to provide good support, plumb and level the pedestal, and pour the concrete base support or island. The concrete surface should be no more than 1 - inch above grade and ± 4 inches below the removable pull-section panel of the meter pedestal.

E. Backfill all trenches, and furnish any imported backfill material required.

6. PG&E shall connect the service lateral conductors to the termination lugs in the meter pedestal, install and seal the pull section panel, and blank off and seal the meter socket.

7. PG&E shall set the meter upon request for service, after required permits and inspections have been obtained from city or county inspection authorities.

8. See Figure 1 on Page 4 for a typical electric distribution system layout for a mobile home development.

9. PG&E shall design its facilities so that the short-circuit duty at the electric service entrance will not exceed 10,000 amps.

10. Mobile home pedestal shall have a minimum rating of 100 amps. The socket and enclosure shall be designed in accordance with PG&E Document 051001 and the following:

A. The minimum meter height shall be 36 inches when the meter is enclosed, or 48 inches if the meter is exposed.

B. When the meter is enclosed, the enclosing cover shall be hinged for ready access and shall have a shatter-proof reading window. When the meter is enclosed or recessed, the clearance from the meter centerline to any fixed side obstruction shall be a minimum of 6 inches.

C. The service cable pull and terminating section shall be covered with a sealable removable panel (or panels), extending from a fixed panel 4 inches ± 2 inches above concrete. The removable panel shall allow full access to the service terminating lugs. Access to the service terminating lugs may be from either front or rear of the pedestal.

D. Service terminating lugs shall be aluminum bodied and of the type specified on Page 7 for a pedestal and Page 8.

E. Lugs for terminating the user's neutral conductors shall be located outside the sealable section and shall be designed to readily permit his neutral system to be isolated, when necessary, from PG&E's neutral.

F. The pedestal at grade line shall have the minimum dimensions as specified on Page 9. A fixed panel for the final grade and concrete pour shall extend 2 inches (minimum) and 6 inches (maximum) above grade, and a minimum of 18 inches below grade.

G. The minimum depth of the pedestal in the ground shall be 24 inches.

H. Adequate ventilation shall be provided to prevent moisture condensation inside the pedestal, as required by UL414.

I. Any unmetered bus going through the breaker section shall be completely covered by steel or approved plastic conduit.

11. Installation of PG&E distribution system facilities including service and metering equipment installations shall be designed and constructed in accordance with PG&E's Electric and Gas Service Requirements. Refer to the applicable sections in the Greenbook manual for additional requirements that may not be listed in this document.

Electrical Service Requirements for Mobile Home Developments

References	Location	Document
Connectors for Insulated Cables Underground Distribution Systems	UG–1: Connectors	015251
Clearances for Supply Service Drops	OH: Services	022169
Methods of Attaching Services to Customer Premises	OH: Services	025202
Temporary Underground Electric Service Single-Phase, 120/240 Volt, 200 Amps Maximum	UG-1: Services	036670
Cables for Underground Distribution	UG-1: Cable	039955
Location, Clearances, and Mechanical Protection Details for Pad-Mounted and Subsurface Equipment	UG-1: General	051122
Terminating Underground Electric Services 0 – 600 Volts in Customer-Owned Facilities	UG-1: Services	058817
Methods and Requirements for Installing Residential Underground Electric Services 0 – 600 to Customer-Owned Facilities	UG–1: Services/Greenbook/EDM	063927

Electrical Service Requirements for Mobile Home Developments

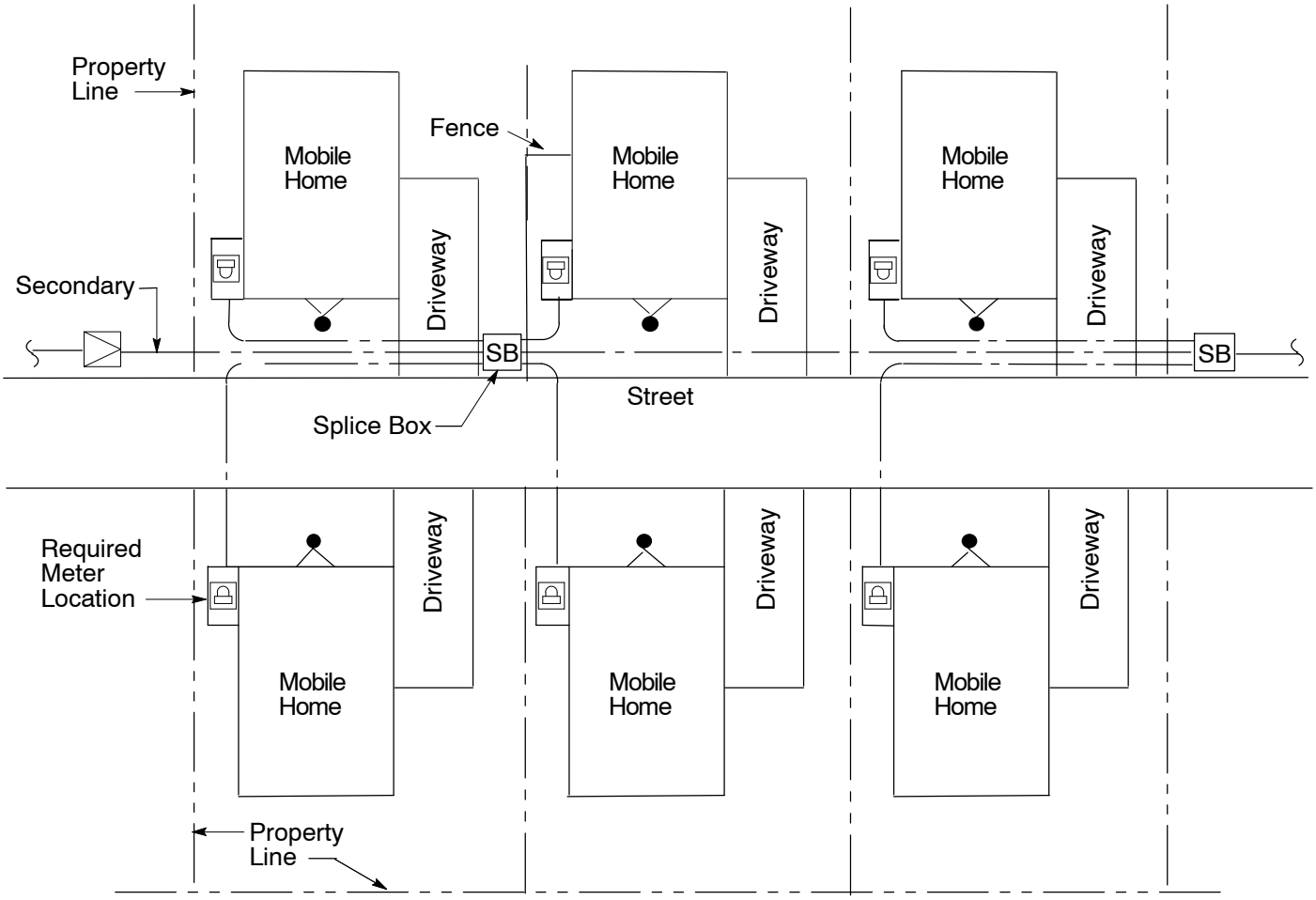

Figure 1 Typical Electric Distribution System for a Mobile Home Development

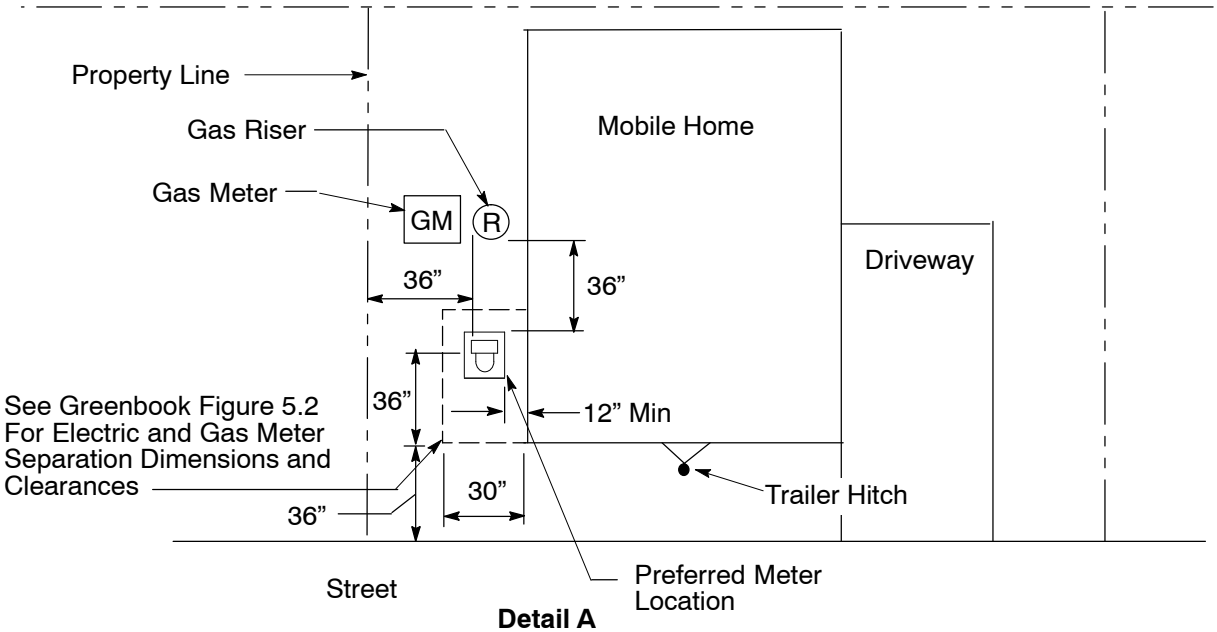

Detail A
Meter Clearance

Location of Electric Meter Pedestal

Notes

1. Position pedestal so that electric meter is faced toward the street or right of way.
2. Round off trench corners at conduit bends.
3. Position pedestal so that electric meter is facing away from mobile home, towards right of way (see Figure 5 and Detail B).
4. Alternate location for pedestal. Position pedestal so that electric meter is faced toward right-of-way (see Figure 5 and Detail B).
5. Cable arrangement when pedestal is set directly along side of secondary distribution trench (Detail B).
6. Trench depth shall be 30 inches (minimum) with or without gas service, and greater if joint with a gas main.

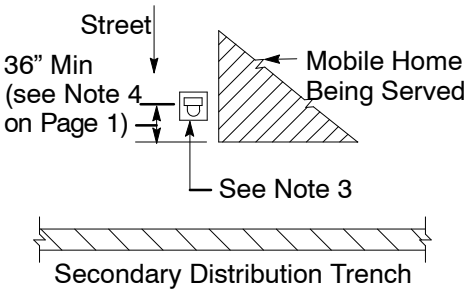

Figure 2 Pedestal (preferred location)

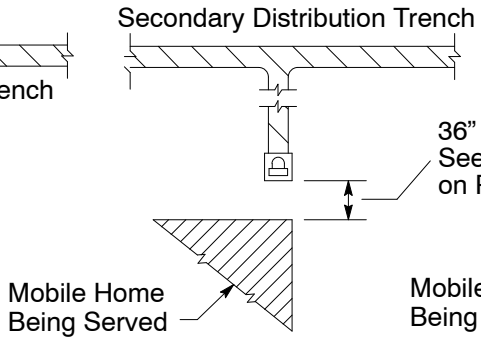

Figure 3 Pedestal (preferred location)

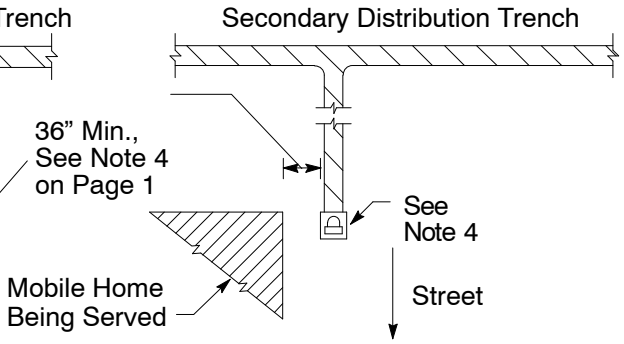

Figure 4 Pedestal (alternate location)

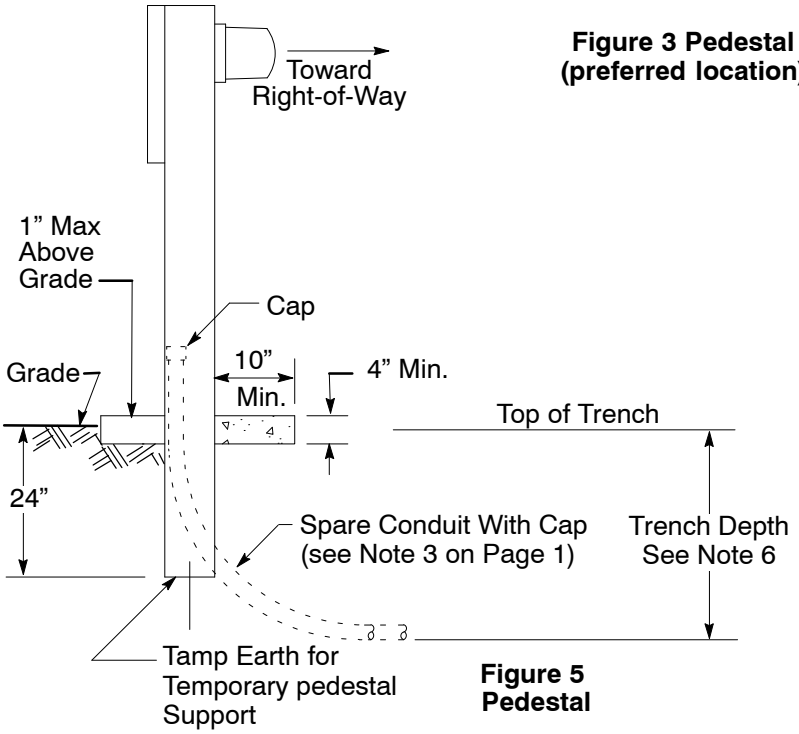

Figure 5 Pedestal

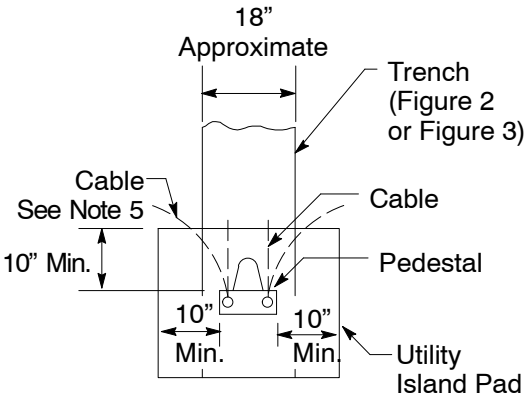

Detail B Plan

Material

Notes

1. It is recommended that the main circuit breakers used in pedestals have a 10,000-amp short-circuit current rating to insure compliance with state and local codes. These codes require that the main breaker of service equipment be rated at the available short-circuit current. PG&E shall design its facilities to supply all new mobile home customers so that the short circuit duty at the pedestal will not exceed 10,000 amps.
2. See Table 3 on Page 7 for a list of approved meter pedestal manufacturers and catalog numbers.
3. Pedestals are allowed to have rear connection kit.

Table 1 List of Material for Supplying Electric Service to Mobile Home Developments

Item	Description
Material to Be Supplied by Applicant	
1	Meter Pedestal (as required, see Table 3 on Page 7 for the approved list)
2	Compression Connector, Straight Lug (see Table 2 on Page 7)
3	Conduit, Rigid Steel, Galvanized, with Pipe Strap (for bare ground wire, omit if armor clad wire is used)
4	Hub and Clamp, Grounding (to suit Item 3)
5	Conduit Fitting, Threaded, With Cover and Gasket (size to suit Item 3)
6	Ground Rod (see Instruction 5B on Page 1)
7	Ground Wire, Copper, Bare, or Armor Clad (size in accordance with applicable electrical codes and local requirements)
8	Conduit and Cap (as required)
Material to Be Furnished by PG&E	
9	Compression Connector, Stacking Lug (see Table 2 on Page 7)
10	Cable, XLP, 600-V (as required), see Document 039955 (see Table 2)

Material (continued)

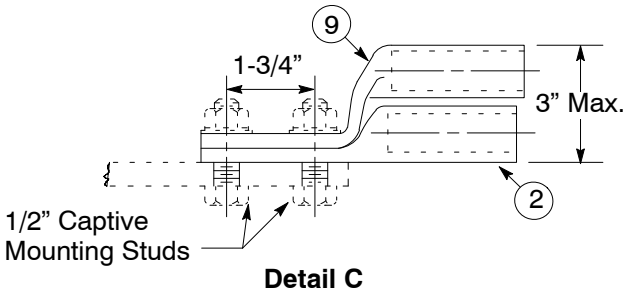

Detail C
Compression-Type Terminals

Table 2 Data and Codes for Approved Compression-Type Material (see Detail C)

Type of Terminal	Cond. Size AWG or kcmil	Item	Code	Manufacturer and Catalog Number				Tool Index No.
				ESP [1]	Mac	Homac	Burndy	
Straight Lug (furnished by user)	350	2	–	AHL-350-BN-TP	MLB 350-N	AL 350-NTN	YA31A3	350A
	4/0		–	AHL-4/0-BN-TP	MLB 4/0-N	SA 4/0-NTN	YA28A5	4/0A
	1/0		–	AHL-1/0-BN-TP	MLB 1/0-N	SA 1/0-NTN	YA25A7	1/0A
	#2		–	AHL-2-BN-TP	MLB 2-N	SA 2-NTN	YAK2CA-2G1	1/0A
Stacking Lug (furnished by PG&E)	350	9	303728	See Document 015251 for Approved Supplier				350A
	4/0		303729					4/0A
	1/0		303730					1/0A
	#2		303731					1/0A
	#6		303732					1/0A

1 Electric Specialty Products Company

Table 3 Approved Meter Pedestals [3]

Rating (amps)	Mobile Home Electric Metering Pedestals	
	Manufacturer	Catalog Number
125	Myers Elec. Prod.	MES-M100SE
	MILBANK	U3250-0
200	Myers Elec. Prod.	MES-M200SE
	MILBANK	U3241-0

1 See Notes on Page 6.
2 Pedestals can have rear connection kits.
3 Other meter pedestal that meet EUSERC 307 and PG&E requirements may be allowed.

Service and Meter Pedestal

Notes

1. The meter pedestal shown on Page 9 may be used for a single service only.
2. Termination lugs for a pedestal shall be twin #6 to 350 kcmil range, aluminum bodied pressure type for connecting a single-service lateral and a single streetlight service when needed. Lug height, measured to the bottom of the terminating lug from grade line, shall be 18 inches minimum and 36 inches maximum. The space between terminating lugs, from lugs to sides of pedestal, from lugs to any grounded surface, or from lugs to panel above shall be 1-1/2 inch minimum. Rigid insulating barriers are required and shall project 1/4-inch minimum beyond any energized parts when this space is reduced. Terminating lugs may be positioned either in-line or staggered, and access shall be unobstructed when all service conductors are in place.
3. Meter height may be reduced to 36 inches if it is enclosed or guarded by a hinged protective hood (see Note 10B on Page 2).
4. The pedestal shown on Page 9 may also be used for an underground service to an individual mobile home not in a park.
5. The pedestal shown in Figure 6 on Page 9 is limited by its pull-section size to a maximum of 350 kcmil conductors.

Service and Meter Pedestal (continued)

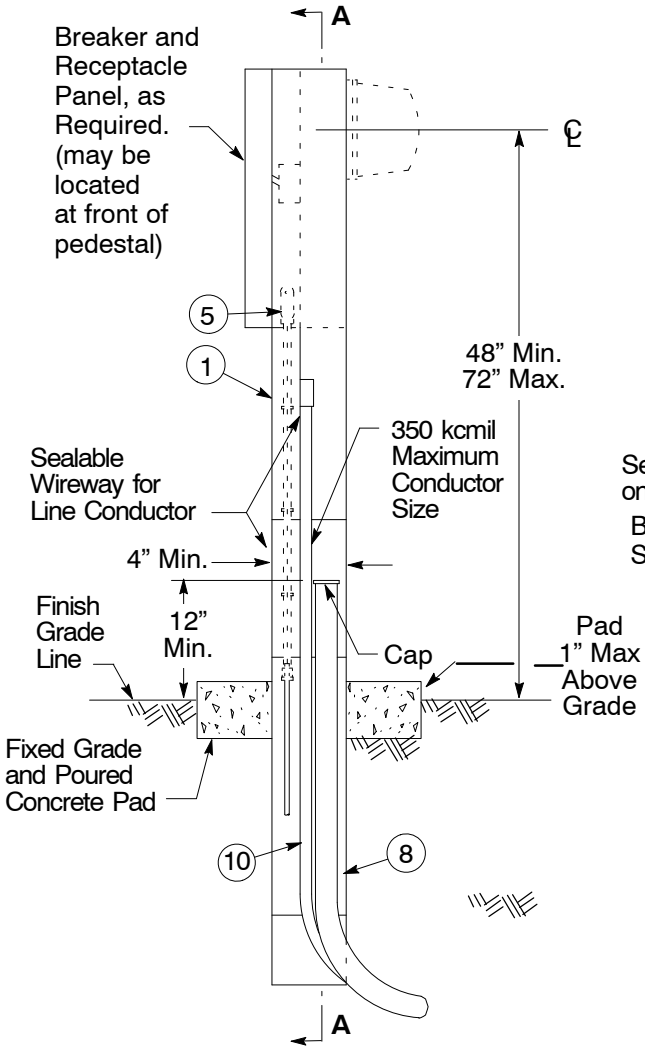

Figure 6
Service and Meter Pedestal

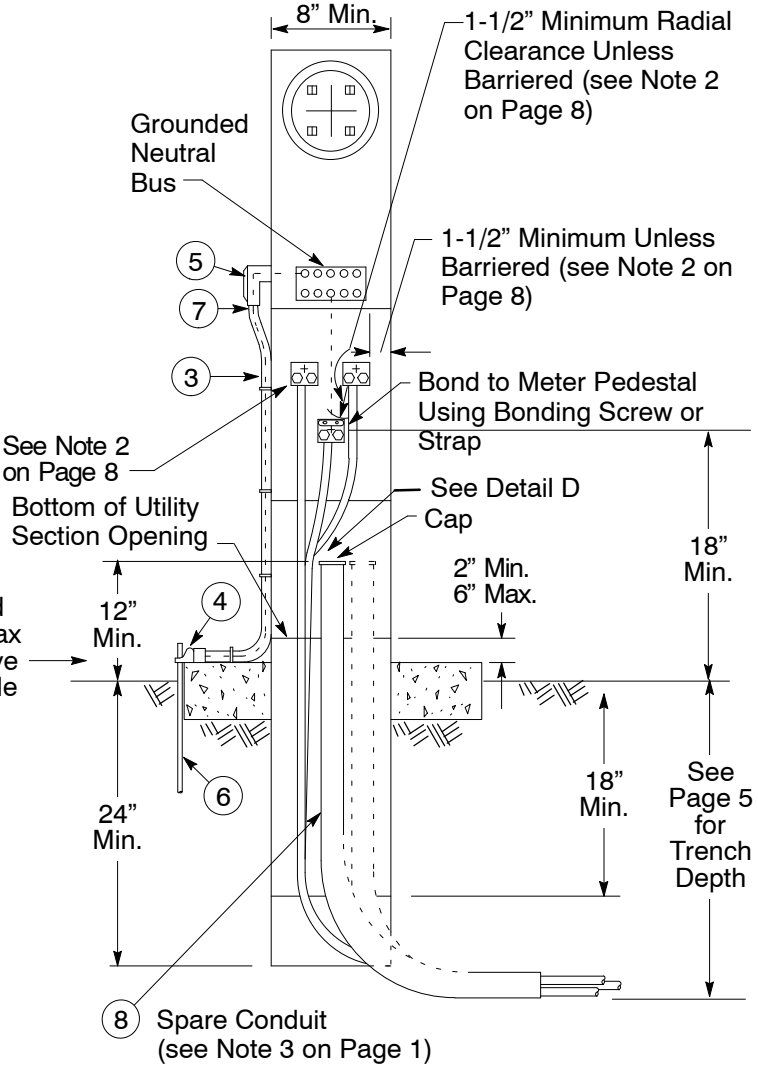

Section A-A

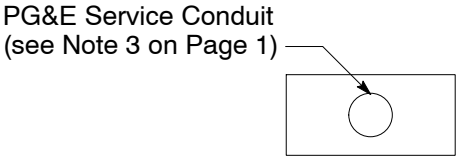

Detail D
Cable and Conduit Arrangement

Revision Notes

Revision 06 has the following changes:

1. Added links and references to Electric Rule 16 and the Greenbook in the Purpose and Scope.
2. Replaced the word “post” with “pedestal” throughout the document.
3. Updated the entire document to with most current electric and gas service requirements.
4. Removed main line service and pedestal information as it does not meet the current requirements.
5. Updated grounding and bonding requirements in Note 6 on pages 1 and 2.
6. Added Note 12 on Page 2 that PG&E facilities serving mobile home parks should be designed and constructed in accordance with PG&E electric and gas service requirements.

Prepared by: ABB1

AGRICULTURAL UNDERGROUND SERVICE 500 HP OR LESS

054619

Asset Type:	Electric Metering	**Function:**	Design and Construction
Issued by:	Lisseth Villareal (LDV2)	**Date:**	07-31-15

Rev. #10: This document replaces PG&E Document 054619, Rev. #09. For a description of the changes, see Page 7.

This document is also included in the following manual:

- *Electric and Gas Service Requirements (Greenbook)*
- *Electric Meter Work Practices*

Purpose and Scope

This document establishes and illustrates the preferred methods of providing underground agricultural service of 500 hp or less.

The requirements shown on this document shall apply to agricultural underground service installations, from PG&E's overhead lines, for connected loads of 500 hp or less. This document applies where there is a suitable service post, building, or structure as approved by PG&E for attaching the service conduit and metering equipment. For requirements applicable to agricultural service poles (overhead service only) refer to PG&E's Document 058087. The customer should contact the local PG&E office for installations larger than 500 hp or other underground installations from underground systems as these installations may require different facilities.

General Information

1. PG&E shall furnish and install transformers, service conductors (in accordance with PG&E's Electric Rule 16), meters, and metering current transformers. Unless otherwise stated, all other materials shall be furnished, installed, and maintained by the customer and shall comply with the requirements of PG&E. It shall be the responsibility of the customer to ascertain and comply with the requirements of governmental authorities having jurisdiction. In areas where no provision is made for inspection by local authorities, the applicable state regulations shall apply. Local ordinances may include wiring requirements in addition to those shown in this document or in the National Electrical Code. Consult inspection authorities for requirements, city or county permits, and inspections which may be required before service can be connected.

2. The customer should apply for service and verify the available service voltage with PG&E as far in advance of construction as possible. The customer should then notify his pump company of the available PG&E voltage.

3. Available Service Voltage: Non-residential single-phase loads to a maximum of 7-1/2 hp shall be served at 120/240 V, single-phase, 3-wire. Three-phase motors of 5 hp, but less than 30 hp, will normally be served at 120/240 V, three-phase, 4-wire, but may be served at 120/208 V or 277/480 V at the customer's option and if capacity is available from existing facilities. Single or grouped three-phase motors of 30 hp to 50 hp can be served at 120/240 V, three-phase, 4-wire, if the customer has a combination of single and three-phase loads, otherwise they must be served at 120/208 V or 277/480 V, three-phase, 4-wire. Single or grouped three-phase motors from 60 hp to 125 hp shall be served at 120/208 V or 277/480 V, three-phase, 4-wire. Three-phase motors larger than 125 hp shall be served at 277/480 V, 4-wire.

4. If one or more service posts are used to support the service conduit and metering equipment, or a panel board on which the service and metering equipment are mounted, they shall meet the minimum requirements outlined in Document 054712 for service posts and Document 065374 for panel board construction. Service posts can be installed for applications from 0 to 200 amps, otherwise, panel board construction is needed.

5. Service Conduit and Termination
   A. Service termination shall be in a PG&E-approved service termination facility. Refer to Figure 5 on Page 6 through Figure 8 on Page 7 for typical installations.
   B. In accordance with PG&E's Electric Rule 16, PG&E shall install the service riser and conduit sweep at PG&E's pole, and shall pull and connect the service lateral to the customer's termination facilities. The customer shall provide and install all conduits and other substructures as necessary and shall trench from the base of PG&E's pole or customer's property line to the service termination point.
   C. The minimum conduit size is based on the maximum continuous ampacity of the metering equipment. Refer to Document 063928 to select the appropriate size and number of conduits.
   D. Underground conduit (Item 5) is restricted to the following types:
      (1) Hot-dip galvanized rigid steel.
      (2) PVC, Schedule 40 or 80, UL approved 90°C.
      (3) PVC marked ASTM F-512, DB120 or better, with prior local PG&E approval. Riser conduit (Item 7) is restricted to galvanized rigid steel.
   E. When the conduit enters an enclosure for service termination, end bells should be installed, unless the conduit has been installed in an enclosure equipped with duct terminators. Cable protectors should be installed on reconstruction projects only, when end bells cannot be installed. Refer to Document 062288 for more information about conduit fittings.
   F. The minimum depth of the customer's underground conduit shall be 24 inches for secondary or 30 inches for primary. If the underground service is in a location subject to erosion, sub-soiling, or ripping, conduit should be buried at a depth sufficient to avoid possible damage, but not less than 24 inches.
   G. PG&E will determine the point-of-service termination to avoid unsuitable routing of underground service installations.
6. If a pad-mounted transformer is used, the customer shall provide the transformer concrete pad. Dimensional details and additional trenching requirements will be provided by the local PG&E office.
7. The customer shall be responsible for bonding and grounding all exposed non-current carrying metal parts. Grounding shall be in accordance with National Electric Code, local ordinances, and PG&E requirements. Do not install a bonding jumper or ground wire inside of any PG&E sealed section. Bonding jumper or ground wire attachments to the outside of the meter cabinet are allowed.
8. Metering Requirements
   A. The meter sequence shall be meter-switch-fuse for all installations.
   B. The customer shall provide and install a self-contained meter socket or current-transformer metering enclosure, approved by PG&E, for the available service voltage, in accordance with Table 1 on Page 4 and the illustrations on Page 5.
   C. For agricultural services, the rating of the service supplied will be determined by the ampacity rating of the metering equipment or enclosure (typically, whichever is greater) where the service conductors terminate.
9. Customer's Control Equipment
   A. Customer's switch and motor control equipment may be installed on the same post or panel board as the underground service terminating and metering equipment.
   B. Customer's switch and motor control equipment shall be of proper horsepower and voltage rating and shall be weatherproof. This equipment shall include three overcurrent units, one in each phase, for protection of each three-phase motor or as otherwise specified in Article 430 of the National Electric Code.
   C. Customer's switch and motor control cover shall be effectively locked or sealed if the enclosure contains accessible electrically energized parts.

10. Service to Three-Phase Pumps

A. When three-phase service is established to a pump, PG&E's crew will assist in checking for satisfactory pump motor performance if the customer or his representative is present. The construction crew should take "clamp-on" ammeter readings at the service head, or the customer or his representative can take the readings at the motor control box. If the reading on the "high" phase is more than 10% higher than the reading on the "low" phase, then the phases should be rolled to get the readings as close as possible (see Figure 1 below). The set of readings that gives the lowest difference is the connection to be retained. It is possible that none of the other readings will be any better. Record all readings.

B. Starting and stopping of the pump should be done only by the customer or his representative. Connections can be changed at the transformer pole or service pole by PG&E's crew or at the motor control box by the customer or his representative.

C. On 240 V 3-wire services where one phase conductor is grounded, all rolling of leads must be done on the customer's motor leads (at the motor control box), **not** on PG&E's service leads.

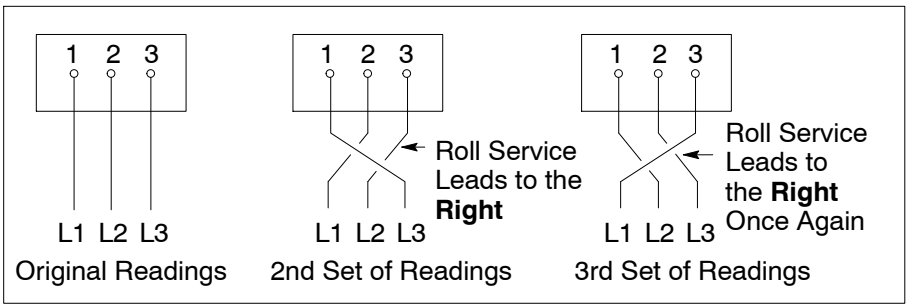

Figure 1
Rolling Leads
(maintains same rotation)

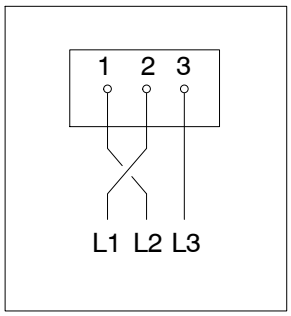

Figure 2
Interchanging Leads
Reverses Rotation
(for information only)

Example: Once water was flowing satisfactorily from the pump, the following ammeter readings were taken:

		Amps		
		L1	L2	L3
A.	Original Readings	60	61	67
B.	Second Set of Readings	60	62	63
C.	Third Set of Readings	59	62	66

Conclusion: Connection "B" should be used.

11. A voltage stabilizer shall be installed in all 480 V three-phase, 3-wire ungrounded service. See Document 052497.

References	Location	Document
Installation of Meter Protective Device on 480 V Services	ELS	033286
Voltage Stabilizer for 480 Volt Three-Phase, 3-Wire, Ungrounded Service	OH: Meters/EMWP	052497
Permanent Wood Post Installation Underground Electric Service	UG-1: Services/Greenbook	054712
Agricultural Overhead Service 300 HP or Less	OH: Services/Greenbook	058087
Underground Conduits	UG-1: Conduits	062288
Methods and Requirements for Installing Commercial Underground Electric Services 0-600 Volts to Customer-Owned Facillities	UG-1: Services/Greenbook	063928
Overhead and Underground Panel Board Construction	OH/UG-1: Services/Greenbook	065374

Typical Underground Service

Table 1 Customer's Metering Equipment Requirements [1]

Service Voltage [2]	Maximum Horsepower [3] Single or Grouped Motors	Metering Equipment's Current Rating (maximum amps shown) [6]	Type Meter Equipment Required	Refer to
120/240 Volt Single-Phase, Non-Residential, 3-Wire	7 1/2 hp Single	100	Self-Contained, 4-Jaw Bused Safety-Socket Meter Box	Figure 5, Page 6
240 Volt Delta 3-Phase, 3-Wire [4]	30 hp Single or Grouped	100	Self-Contained, 5-Jaw Bused Safety-Socket Meter Box	Figure 6, Page 6
	60 hp Single or Grouped	200		
240/120 Volt Delta 3-Phase, 4-Wire	30 hp Single or Grouped	100	Self-Contained 7-Jaw Bused Safety-Socket Meter Box	Figure 7, Page 6
	50 hp Single or Grouped	200		
480 Volt Delta 3-Phase, 3-Wire [5]	60 hp Single or Grouped	100	Self-Contained 5-Jaw Bused Safety-Socket Meter Box	Figure 6, Page 6
	125 hp Single or Grouped	200		
	300 hp Single or Grouped	400	Combination Meter, Current-Transformer, and Service Termination Cabinet with 8-Jaw Socket and CT Mounting Base	Figure 8, Page 7
277/480 Volt Wye 3-Phase, 4-Wire	60 hp Single or Grouped	100	Self-Contained 7-Jaw Bused Safety-Socket Meter Box	Figure 7, Page 6
	125 hp Single or Grouped	200		
	300 hp Single or Grouped	400	Combination Meter, Current-Transformer and Service Termination Cabinet with 13-Jaw Socket and CT Mounting Base	Figure 8, Page 7
	500 hp Single or Grouped	600	Pad-Mounted (free standing) Switchboard	Greenbook Section 10

1 For meter equipment illustration, see Pages 6 and 7.
2 See Note 3 on Page 1 for available service voltages.
3 Maximum horsepower for single and grouped motors is based on nameplate ratings. Ratings shown are the recommended values for motors running at full load.
4 Limited availability, consult PG&E.
5 480 Volt Delta is not available to new services.
6 Customers may choose a greater current rating for their metering equipment.

Typical Underground Service (continued)

Note

1. Voltage stabilizer shall be furnished and installed by PG&E. Refer to Document 052497.

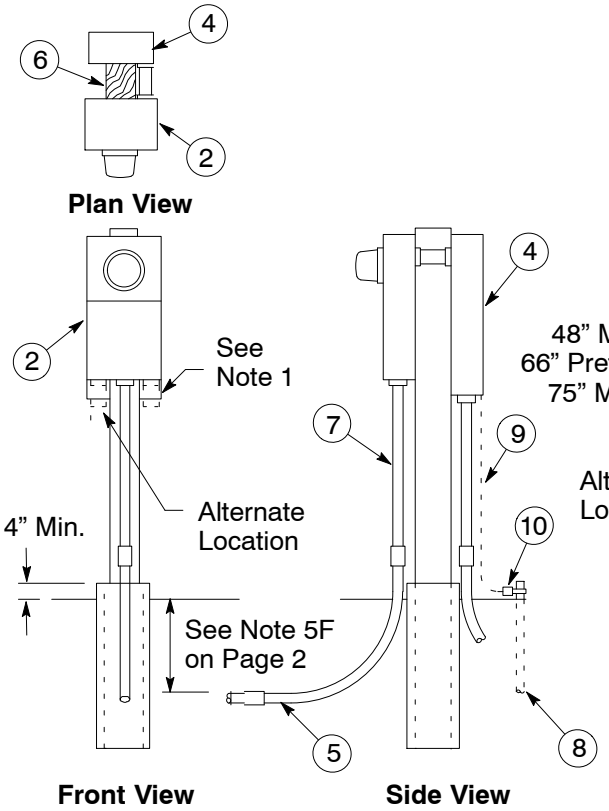

Figure 3
Safety Socket Box and Service Equipment Enclosure

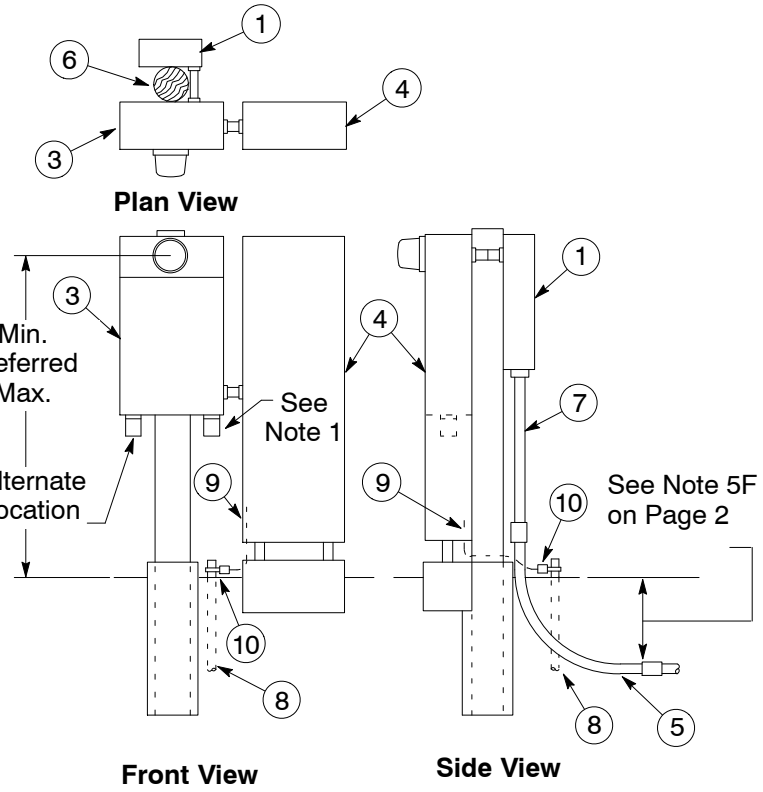

Figure 4
Meter and CT Cabinet With Free-Standing Pad-Mounted Service Equipment Enclosure

Table 2 List of Materials to Be Furnished and Installed by the Customer

Item	Description
1	Underground Pull Box (see Figure 8 on Page 7)
2	Self-Contained Bused Safety Socket Box (see Figure 5, Figure 6, and Figure 7 on Page 6)
3	Combination Meter and Current-Transformer Cabinet
4	Main Switch or Service Equipment Enclosure
5	Service Conduit (see Note 5D on Page 2)
6	Post (see Note 4 on Page 1)
7	Conduit, Riser, Galvanized (see Note 5D on Page 2)
8	Ground Rod (see Note 7 on Page 2)
9	Ground Wire, Copper, Bare, or Armor Clad (see Note 7 on Page 2)
10	Ground Clamp, as Required, for Item 9

Safety Socket Meter Boxes

Notes

1. Applicable to maximum of 125 hp motor(s) (self-contained).
2. Refer to PG&E's *Electric and Gas Service Requirements (Greenbook)* for dimensional and specification details.
3. A voltage stabilizer, required on 480 V ungrounded services, shall be furnished and installed by PG&E. See Document 052497.
4. 240 V, three-phase, 3-wire service is available only when PG&E's transformers are of the overhead type, the load is limited to three-phase motors (small 240 V, single-phase loads may be permissible in some locations), and in the future other customers are not likely to be served from the transformer bank.

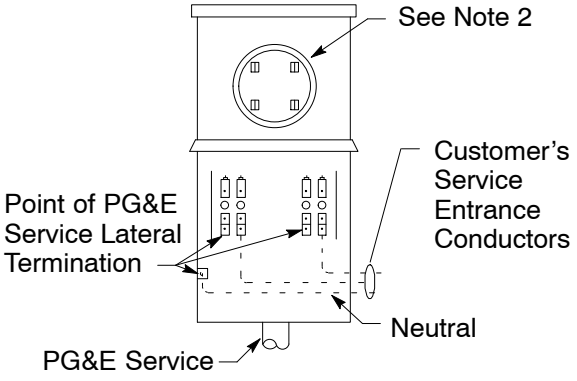

Figure 5
0 – 200 Amp Safety Socket Meter Box
120/240 V, Single-Phase, Self-Contained
4-Jaw Bused

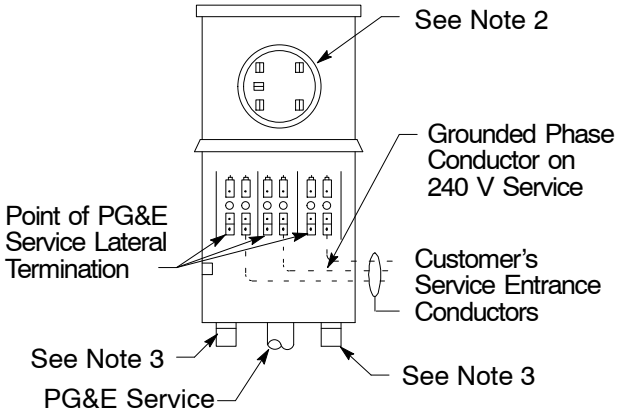

Figure 6
0 – 200 Amp Safety Socket Meter Box
240 V and 480 V, Three-Phase, 3-Wire, Self-Contained
5-Jaw Bused (see Notes 1 and 2)

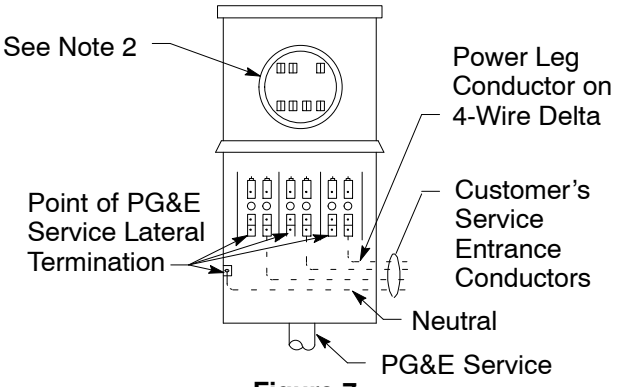

Figure 7
0 – 200 Amp, Safety Socket Meter Box
240/120 V, Three-Phase, 4-Wire Delta
or 480/277 V, Three-Phase, 4-Wire, Wye Self-Contained
7-Jaw Bused (see Note 1)

Transformer-Rated Enclosures and Metering

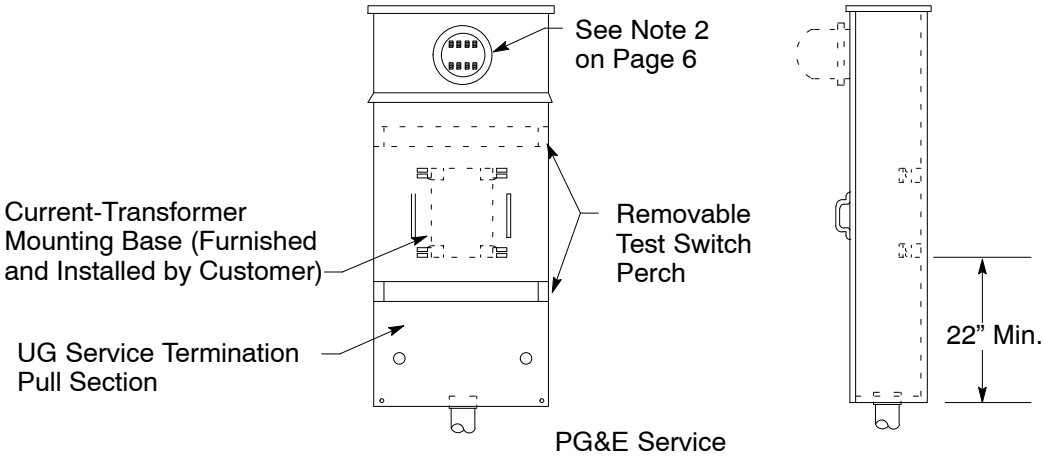

Figure 8
400-Amp Service Terminating Pull Box and Combination Meter and Current-Transformer Cabinet
240 V, Three-Phase, 3-Wire or 480 V, Three-Phase, 3-Wire Delta
240/120 V, 3-Phase, 4-Wire Delta or 480/277 V, Three-Phase, 4-Wire Wye
Three-Phase, 3-Wire Service Equipment is Shown (see Note 4 on Page 6)

Notes

1. Applicable to maximum of 300 hp motor(s).
2. Refer to PG&E's *Electric and Gas Service Requirements (Greenbook)* for dimensional and specification details.
3. A voltage stabilizer, required on 480 V ungrounded services, shall be furnished and installed by PG&E. See Document 052497.
4. 240 V, three-phase, 3-wire service is available only when PG&E's transformers are of the overhead type, the load is limited to three-phase motors (small 240 V, single-phase loads may be permissible in some locations), and in the future other customers are not likely to be served from the transformer bank.
5. Figure 8 is applicable to wall-mounted, termination enclosures with a maximum rating of 400 amps. Larger termination equipment (600 amps, three-phase) must be pad-mounted.

Revision Notes

Revision 10 has the following changes:

1. Corrected available service voltage for three-phase motors of 5 hp but less than 30 hp shown on Note 3 on Page 1.
2. Clarified 3 rd column of Table 1 on Page 4.
3. Revised Table 1 Footnotes 3 and 6 on Page 4.

Prepared by: ABB1

PERMANENT WOOD POST INSTALLATION UNDERGROUND ELECTRIC SERVICE

054712

Asset Type:	Electric Distribution	**Function:**	Construction and Design
Issued by:	Lisseth Villareal (LDV2)	**Date:**	06-28-13

Rev. #08: This document replaces PG&E Document 054712, Rev. #07. For a description of the changes, see Page 5.

This document is also included in the following manual:

- *Electric and Gas Service Requirements Manual* (Greenbook)
- *Electric Meter Work Practices*

Purpose and Scope

This document shows the minimum requirements for a customer-installed wood post for permanent installation of underground electric service. The service installations shown on this document are intended to serve individual customers (not mobile home parks) where PG&E-approved manufactured pedestals are not readily available. Manufactured pedestals are preferred because they provide easier service installations and better protection of conduit, ground wire and customer's connection facilities.
Refer to *Electric and Gas Service Requirements Manual* (Greenbook), Section 6 and Section 9.

General Information

1. The customer shall install service conduit in accordance with this document. The customer shall install load side conduit and suitable conductors as required by local or state codes.
2. Local ordinances may include requirements in addition to those shown in this document. Consult local inspection authorities for these requirements. In areas where local ordinances require permits and inspection, these must be obtained before PG&E can establish service. Meters will be installed and energized by PG&E after the customer's metering equipment has been properly installed and after an inspection clearance has been given to PG&E by the appropriate electrical inspection authority.
3. When a service larger than 225 amps is desired, panel board construction is required. Refer to Document 065374.
4. Service Post Installation
   A. A permanent service installation is one which will remain for a period longer than one year, as estimated by PG&E (for temporary installations, refer to Document 036670).
   B. Wood posts used for permanent service shall be pressure-treated for the full length. Any other process which will provide equivalent penetration and retention must be approved by PG&E. Acceptable wood preservatives are water-borne salts and pentachlorophenol. Brush application of wood preservative is ineffective for permanent posts and therefore unacceptable. Minimum dimensions of square posts shall be 6" x 6" x 8'-0" long. Minimum dimensions of cylindrical post shall be 6" diameter x 8'-0" long. Depth of setting shall be 3' 0" minimum. A 4-inch-thick concrete pad shall be poured around the post as shown in Figure 1 on Page 3 and Figure 3 on Page 4.
   C. Post installations shall be in protected locations, out of the way of vehicular traffic or other hazardous conditions.
5. Service Conduit and Termination
   A. PG&E will install the underground service in accordance with PG&E's Electric Rule 16. The underground service lateral will be installed, owned, and maintained by PG&E from PG&E's distribution line to the termination facility, which is normally the meter enclosure.
   B. The customer shall provide trenching and backfill in accordance with PG&E specifications and pay any costs provided for in PG&E's Electric Rule 16.
   C. Residential service will normally be installed in conduit as shown in Figure 1 on Page 3.
   D. Non-residential service will normally be installed in conduit furnished and installed by the customer as shown in Figure 3 on Page 4.

6. Grounding

   The customer shall be responsible for bonding and grounding all exposed non-current-carrying metal parts. Grounding shall be in accordance with the National Electric Code and local ordinances except that the grounding wire shall be protected against mechanical damage by rigid steel conduit, or armored copper ground wire may be used.

7. Metering Requirements

   A. Meters will be furnished by PG&E.

   B. For residential installations, a PG&E-approved combination service termination and meter socket panel without circuit closing devices as shown on Page 3, shall be furnished, installed, and wired by the customer.

   C. For non-residential applications, a PG&E-approved combination service termination and bused-safety-socket meter box with test bypass facilities and service main disconnect, as shown on Page 4, shall be furnished, installed, and wired by the customer.

References	Location	Document
Temporary Underground Electric Service Single-Phase, 120/240 Volt, 100 Amps Maximum	UG-1: Services/Greenbook	036670
Minimum Requirements for the Design and Installation of Conduit and Insulated Cable	UG-1: Cable/Greenbook	038193
Terminating Underground Electric Services 0–600 Volts in Customer-Owned Facilities	UG-1: Services/Greenbook	058817
Methods and Requirements for Installing Residential Underground Electric Services 0–600 V to Customer-Owned Facilities	UG-1: Services/Greenbook/EDM	063927
Methods and Requirements for Installing Commercial Underground Electric Services 0-600 Volts to Customer-Owned Facilities	UG–1: Services/Greenbook/EDM	063928
Overhead and Underground Panel Board Construction	OH: Services/UG–1: Services/Greenbook	065374

Table 1 List of Materials to be Furnished and Installed by the Customer (see Figure 1 on Page 3 and Figure 3 on Page 4)

Item	Description
1	Service Termination Enclosure, Combination Meter Socket Panel (see Figure 2 on Page 3 or Figure 4 on Page 4 for details)
2	Square Post, 6” x 6” x 8’-0” Long, Cylindrical Post, 6” in Diameter x 8’-0” Long, Fully Treated (see Note 4 on Page 1)
3	Conduit (load side), Size and Material as Required by Building Code (typically rigid galvanized steel or Schedule 80 PVC plastic)
4	Conduit, Service Riser, Rigid Steel, Galvanized or Schedule 80 PVC Plastic, (see Note 5 on Page 3)
5	Conduit, Rigid Steel, Galvanized, With Pipe Strap (for bare ground wire, omit if armor clad wire is used)
6	Hub and Clamp, Grounding, to Suit Item 5
7	Ground Rod (see Note 6)
8	Ground Wire, Copper, Bare or Armor Clad (size in accordance with applicable electrical codes and local requirements)
9	Conduit, Plastic or Rigid Steel, for Underground Service (size as shown in Document 063927 and Document 063928)

Residential Service Only, 0–225 Amp

Notes

1. Poured concrete pad shall be approximately 4 inches thick. Provide 1/2-inch slope away from post to allow for drainage.
2. Install bend in direction of service trench. To facilitate cable installation, only one 90° bend is permitted in the service riser installation. If trench is shared with gas or other utilities, consult PG&E for required increased trench depth.
3. Meter socket enclosures for residential service (Figure 2) shall not be equipped with any circuit closing device.
4. Approved meter socket enclosures for non-residential service (Figure 4 on Page 4) shall be equipped with test bypass facilities.
5. Whenever it is necessary to install a service longer than 75 feet, the applicant must contact PG&E before ordering the service riser, conduit or, termination facilities. If the service riser and conduit called for in Table 2 on Page 4 will not accept the cable required to meet the voltage and/or flicker drop requirements, or will cause cable pulling problems, the next larger PG&E standard conduit size must be installed. (Refer to Document 041543 for flicker and voltage drop requirements and Document 038193 for cable pulling limitations.)

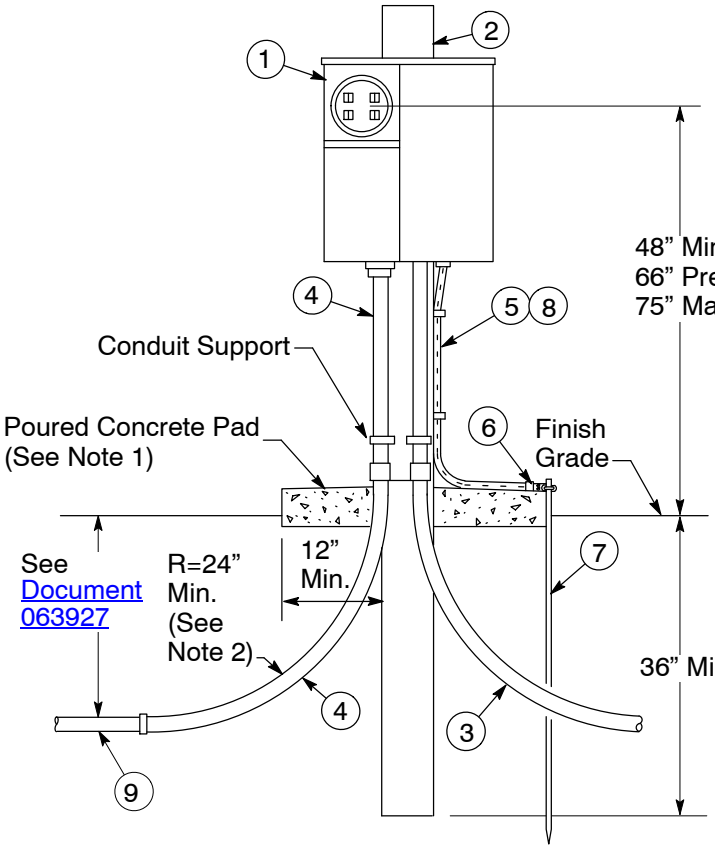

Figure 1
Residential Service

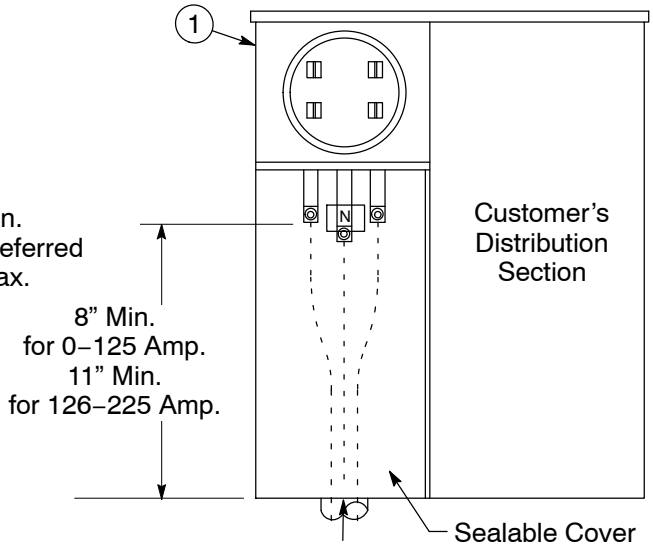

Figure 2
Typical Residential Combination Service Termination Enclosure and Meter Socket Panel, 225 Amp Max., 120/240 V

Residential and Non-Residential Service 0–225 Amp Installed in Conduit

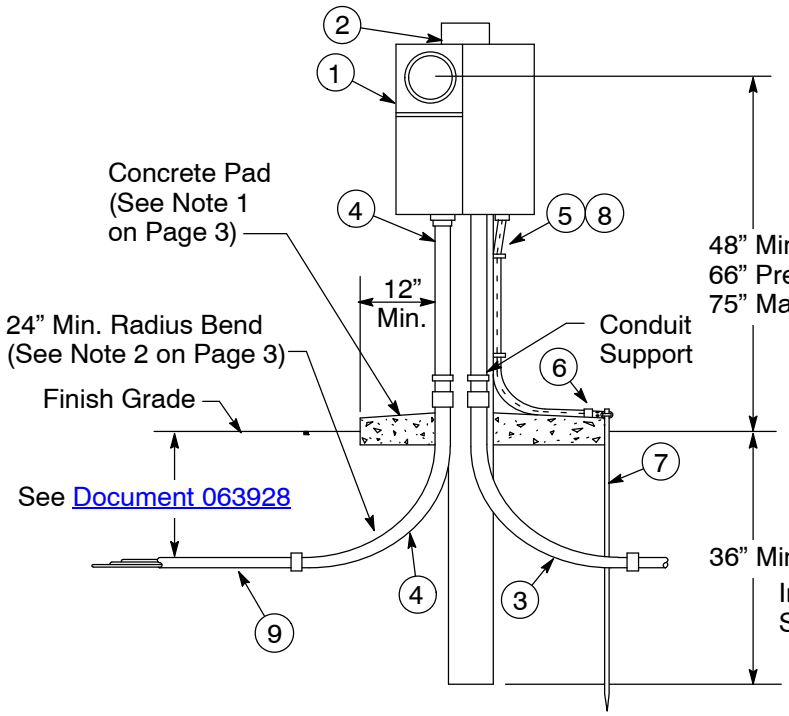

Figure 3
Non-Residential Service

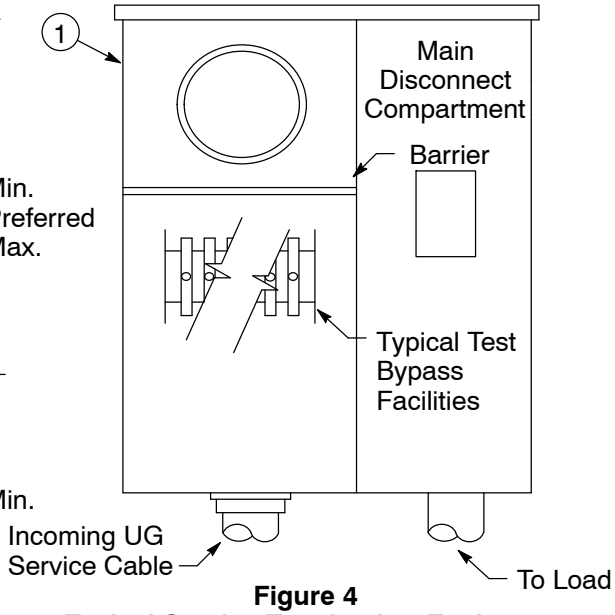

Figure 4
Typical Service Termination Enclosure
for Non-Residential 3-Wire or 4-Wire Service
0–225 Amp Maximum 0–600 V
(see Note 5 on Page 3)
(see Figure 2 on Page 3 for typical residential enclosure)

Table 2 Cable and Conduit Requirements

Main Service Switch Rating – Amps	Conduit Number and Size (see Note 5 on Page 3)		Aluminum Cable Number and Size AWG or kcmil	
	3-Wire	4-Wire	Per Phase	Neutral
0–125	See Footnote [1]	1–3”	1–1/0	#2
126–225	1–3”	1–3”	1–4/0	1–1/0

[1] 1- 2” for residential. 1- 3” for non-residential.

Revision Notes

Revision 08 has the following changes:

1. Revised Purpose and Scope Section.
2. Revised maximum service from 200-amp to 225-amp.
3. Revised General Information Note 3 and Note 4B on Page 1.
4. Revised Reference Section and Table 1 on Page 2.
5. Deleted Note 4 on Page 3 and renumbered accordingly.
6. Revised Figures 1 – 4 on Pages 3 and 4.
7. Revised Table 2 on Page 4.

Prepared by: NIB1/EOB1

PLANNING GUIDE FOR SINGLE CUSTOMER SUBSTATIONS SERVED FROM TRANSMISSION LINES

055103

Department:	Electric T&D	**Section:**	T&D Engineering and Technical Support
Approved by:	G.O. Duru (GOD1)	**Date:**	01-30-06

Rev. #01: This document replaces PG&E Document 055103, Rev. #00. For a description of the changes, see Page 7.

This document is also included in the following manuals:

- *Electric and Gas Service Requirements Manual* ("Greenbook")
- *Electric Planning Manual*

Purpose and Scope

1. This document specifies the requirements and preferred method of serving single customer substations from transmission lines.
2. This substation planning guide is only applicable to single customer (PG&E owned) substations where the service delivery voltage is over 2,000 volts and the magnitude of the applicant's load is such that PG&E has elected, for its operating convenience and necessity, to supply the load from transmission sources. This will require the installation of a substation on the applicant's premises under the provisions of Section D of PG&E's Electric Rule No. 2 and Section C of PG&E's Electric Rule No. 16.
3. The applicant's service may be either overhead or underground. A typical overhead service is shown in Figure 1 on Page 5, and a typical underground service is shown in Figure 2 on Page 6. The illustrations on Pages 5 and 6 of this document are general and are intended for preliminary planning purposes only.

General Information

4. The applicant shall, at his or her expense, obtain all land use, environmental impact, and necessary building permits.
5. It is the applicant's responsibility to install and maintain all related substation site improvements in accordance with the requirements of PG&E and those of federal, state, and local agencies.
6. The applicant shall, at his or her expense, furnish, construct, and maintain the following site improvements:

   A. Fences and gates.

   B. Paving and grading.

   C. Paved access road.

   D. Foundations, including embedded stubs and anchor bolts.

   E. Conduits and pull boxes.

   F. Grounding systems.

   G. Landscaping required.

   H. Oil retention facilities if required (as determined by PG&E or the applicant).

   Foundations, underground conduits, and grounds are to be installed as specified by PG&E. The applicant shall arrange to have PG&E inspect them during installation, while they are exposed. Foundation forms and anchor bolt settings are to be approved before concrete is poured.

   Landscaping or oil retention facilities may be required by local, state, or federal agencies.
7. If an enlargement of an existing customer substation is to be made that will require construction to be done within the fence of the existing energized station, it may be necessary to either relocate the fence or have the actual construction work performed by PG&E at the applicant's expense. Ties to an existing ground grid are to be made by PG&E.
8. The applicant's design for grading, access road, and oil retention facility must be approved by PG&E prior to the start of construction.

9. The applicant's service point is the terminal pad of a disconnect switch in the substation. The applicant shall terminate his or her electric service conductors with PG&E-approved flexible connectors to PG&E's copper switch pads. The connectors and tinned Everdur bolts (or equal) shall be furnished by the applicant and installed by PG&E. The applicant's equipment, except overhead service take-off lines, shall not be mounted on PG&E structures. Underground cable potheads shall be supported on a separate structure provided by the applicant.

10. Substation lighting poles and lighting fixtures will be furnished and installed by PG&E, including wiring. The applicant shall provide the required foundation and conduits for lighting poles as described in Note 6 on Page 1. If practical, lighting fixtures may be installed on substation structures.

11. Revenue metering transformers and meters will be provided and installed by PG&E. No other circuits or equipment shall be connected to the metering transformers, except with special written approval granted for unusual circumstances.

    Where the applicant takes delivery at the secondary voltage level of the transformer, the applicant shall provide a cubicle which is dedicated for the installation of revenue metering transformers and meters. This metering cubicle shall be located in the applicant's switchgear, outside the fenced substation enclosure. The cubicle shall be designed to comply with PG&E's service requirement standards, and drawings shall be submitted to PG&E for approval prior to the manufacturer's fabrication.

    Where the applicant takes delivery at the transmission voltage level and owns or leases the substation, metering shall normally be at the transmission voltage with the applicant providing the structures, foundation, and by-pass and disconnect switches for mounting and connecting the metering transformers. Meters shall be located in a building or cubicle provided by the applicant and accessible without entry into the fenced substation enclosure.

12. Services will normally be supplied from a grounded wye transformer. Services of voltages other than those shown on Table 1, are generally not available. Special consideration is necessary if 230 kV transmission voltage is required.

Table 1 Three-Phase MVA Ratings [1]

Nominal Transmission Voltage	Available Substation Secondary Voltage		
	4160Y/2400 V	12470Y/7200 V	21600Y/12470 V
	Three-Phase MVA Ratings (maximum)		
60 kV	10.5	12.5	12.5
70 kV	5.2	12.5	12.5
115 kV	10.5	45.0	45.0

[1] These ratings indicate the MVA size of emergency replacement transformers. Service to loads in excess of the values indicated requires special consideration.

13. The applicant shall install, adjacent to the substation, a power circuit breaker or a three-phase recloser on his or her main service conductor, or on each circuit supplied from the main service. The term "adjacent" means that only the substation fence separates the applicant's switchgear from the substation. If the applicant cannot locate his or her switchgear adjacent to the substation, the applicant shall provide a metering cubicle, and a power circuit breaker or a three-phase recloser, for his or her main service adjacent to the substation.

14. The applicant shall provide ground fault protection if:

    A. Power circuit breakers or three-phase reclosers (specified in Note 13 above) serve overhead lines.

    B. Ground fault limiting resistors or reactors are installed.

    Ground fault protection is also recommended for underground cables.

    The applicant's protective devices shall coordinate with PG&E's protective devices, and they shall clear every fault on the applicant's system.

15. Any underground conduits or piping extending outside of the fenced area of the substation yard shall be non-metallic to a distance of at least 8 feet.

16. On 3-wire services using metallically shielded underground high voltage cables to connect the substation to the applicant's equipment, the cable shield should be grounded **only** at PG&E's end and shall be insulated at the applicant's end. Shielded cable shall be installed in non-metallic conduit extending to a distance of at least 8 feet outside the substation fence.

17. Where the applicant requests a ground fault limiting resistor in the transformer neutral located outside of the substation fenced area, the elevated neutral conductor shall be insulated for the operating voltage supplied. If the applicant requires a ground fault limiting resistor in the substation, the resistor and a resistor bypass switch will be installed by PG&E at applicant's expense.
18. If the applicant's equipment fence ground is bonded to his or her equipment ground grid, the fence must be separated from the substation fence by 8 feet. Use non-metallic 8-foot sections to cover the separations. If the applicant's equipment fence ground is not bonded to his or her equipment ground grid, the equipment fence must be separated from the substation fence by 6 inches.
19. The substation ground grid shall not be connected to the fence grounds or anything outside the substation. For details of ground grid installation and separation requirements of fence grounds, see Document 067910 and Document 020607.
20. The applicant shall be responsible for keeping the substation free of weeds and other debris.
21. The following data is to be supplied by the applicant to PG&E:
    A. Prior to design completion:
        (1) The applicant's service requirements, such as expected demand (MW), proposed service voltage, power factor, and ultimate growth requirements.
        (2) Plot plan showing the proposed substation location and proposed access road.
        (3) Grading plan of the proposed substation, access road, and adjacent areas.
        (4) Soil report or suitable information for foundation design.
        (5) The electrical rating of the ground fault limiting resistor, the resistor by-pass switch, current transformer, and any other associated equipment, if required by the applicant.
        (6) Location, length, and description (overhead or underground) of the service connection to the applicant's facilities.
        (7) Final disposition of yard drainage to determine if a special oil retention facility will be required.
        (8) Landscaping plans, if required.
        (9) Electrical plans, such as single-line, meter, and relay drawings, general arrangement of conduits and grounds, and elementary diagrams of the applicant's facility. These drawings shall include all high voltage fuse and/or breaker ratings, capabilities of interrupting devices, current transformer and potential transformer ratios and connections, and protective relay types, ranges, and settings.
    B. Prior to operation:
        (1) Documentation of permits the applicant has obtained for the substation and a written inspection clearance notice from the inspection authority having jurisdiction (city, county, or state agency, etc.).
        (2) Signed reports for the following tests:
            (a) Phase-to-phase and phase-to-ground megger test performed on the applicant's side of the open disconnect switch to the service point, including high voltage cable runs with all customer's primary breakers and fuses racked open.
            (b) Individual megger tests on all major equipment, such as primary breakers, potential transformers, station service and auxiliary transformers.
            (c) Ratio test of auxiliary transformers.
        (3) Test report showing that the primary breaker relay settings conform with the protection requirements provided by PG&E.
22. The following data is to be furnished to the applicant by PG&E:
    A. Substation equipment layout.
    B. Arrangement and requirements for foundations, embedded stubs, and anchor bolts.
    C. Arrangement of conduits, if required, and grounds.
    D. Electrical data, such as short-circuit duty, transformer impedance, etc.
    E. Outline of PG&E's transformer bank differential current transformers to be located in the applicant's switchgear, if required.

F. Engineering standards for substation fence and fence grounding.

G. Requirements for revenue metering equipment.

H. Space requirements and details of substation capacitors, if required.

I. Provision for a mobile transformer, if required.

J. Specification for an oil retention facility, if required.

K. Relay coordination and other protection requirements.

L. PG&E will prepare design drawing of the access road and fencing at the applicant's expense if the applicant so requests.

References **Document**

General Notes for Grading and Paving for Substations 041838
Grounding Requirements for Outdoor Electrical Substations 067910
High Pressure Sodium Outdoor Lighting 459076
Method of Grounding Fences and Wire Trellises 020607
Property Fence and Gates 059659
Termination and Structure for 12 kV and 21 kV Underground Feeders Low Profile Substations 050861

Table 2 List of Material for Serving Single Customer Substations From Transmission Lines

Item	Description
	Material Furnished by PG&E
1	Structures [1]
2	Control Building
3	Transformer
4	Control Wiring
5	Lighting Fixture
6	Air Switch
7	High Voltage Fuses
8	Disconnect Switch
9	Station Service
10	Potential Transformer
	Material Furnished by Customer
11	Fence and Gates [2]
12	Foundation
13	Grounding System
14	Conduits, ABS Type DB
15	Take-Off Equipment
16	Stubs and Anchor Bolts
17	Access Roads
18	Pothead and Support Structure

[1] Latticed steel or aluminum structures may be used instead of the tubular structures shown in Figure 1 on Page 5 and Figure 2 on Page 6.

[2] Gate location, roadway and inside substation arrangement may vary, depending on the direction of entry for the access road.

60 or 70 kV Station for Overhead Service

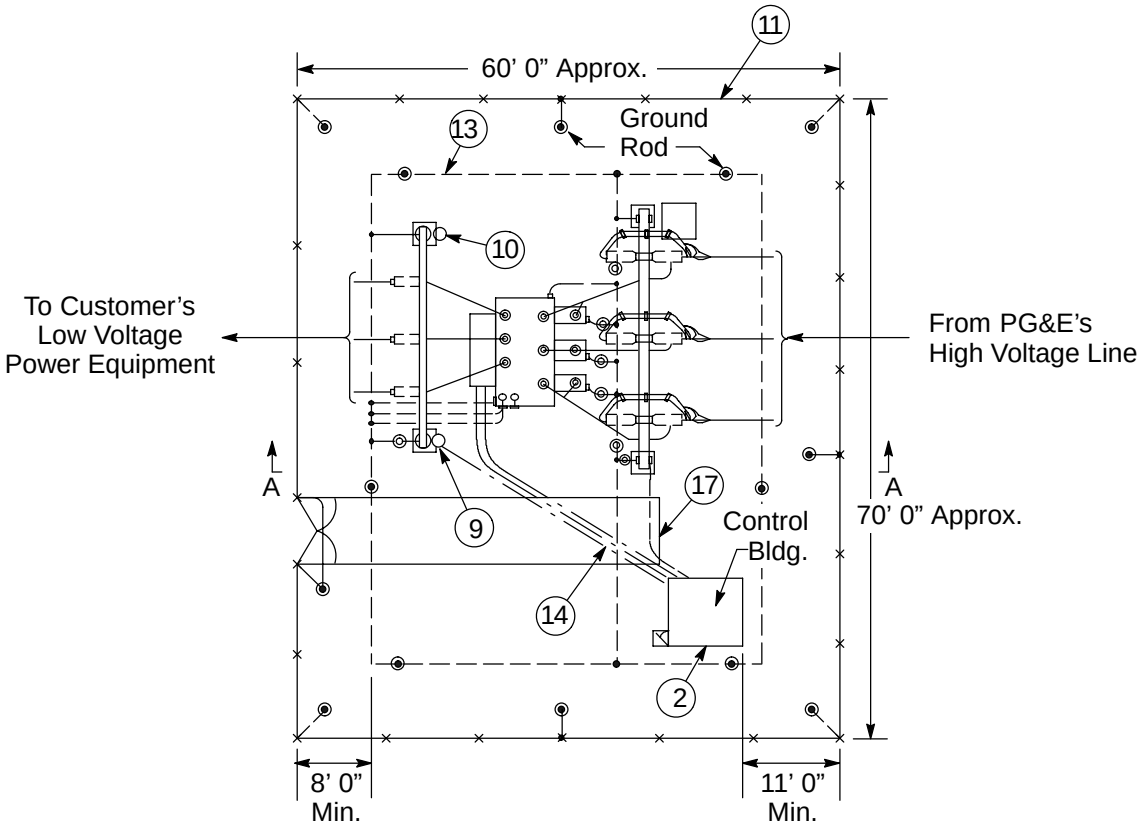

Figure 1
Typical 60 or 70 kV Station for Overhead Service
Plan View

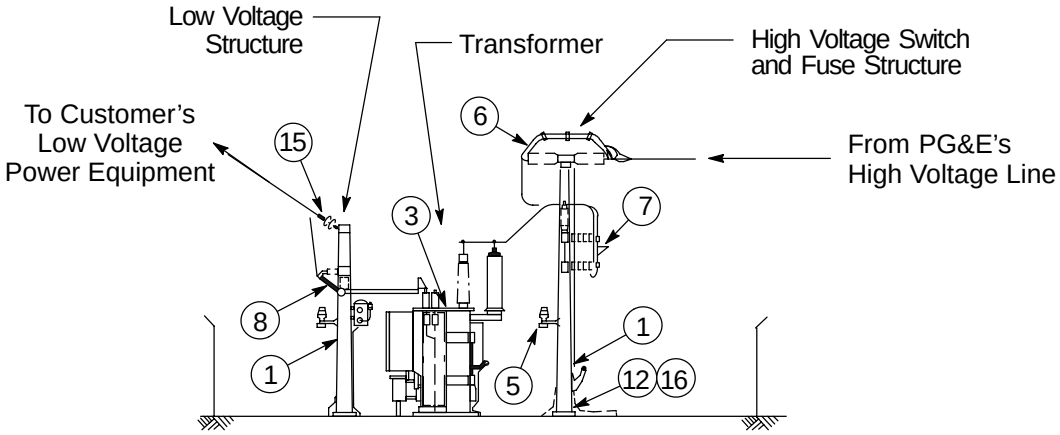

Section A-A

115 kV Station for Underground Service

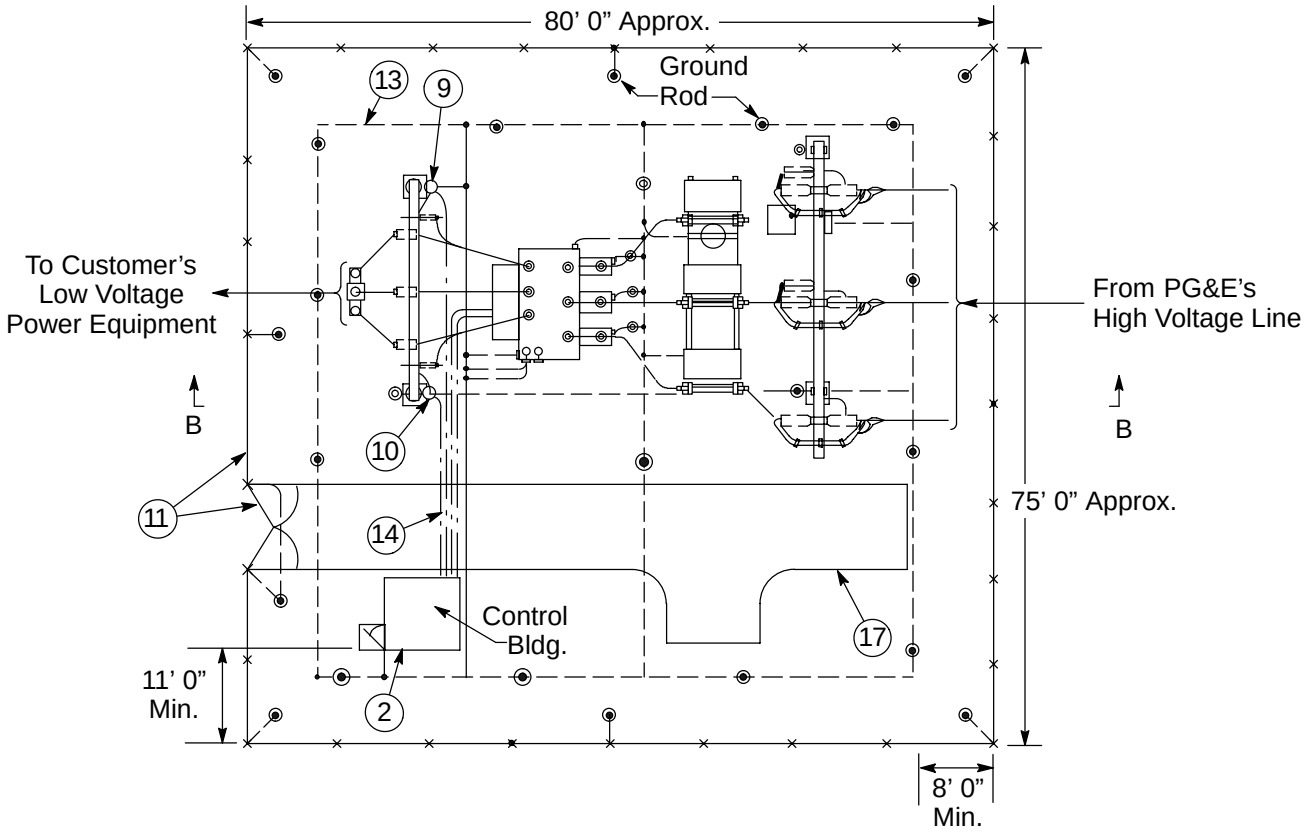

Figure 2
Typical 115 kV Station for Underground Service
Plan View

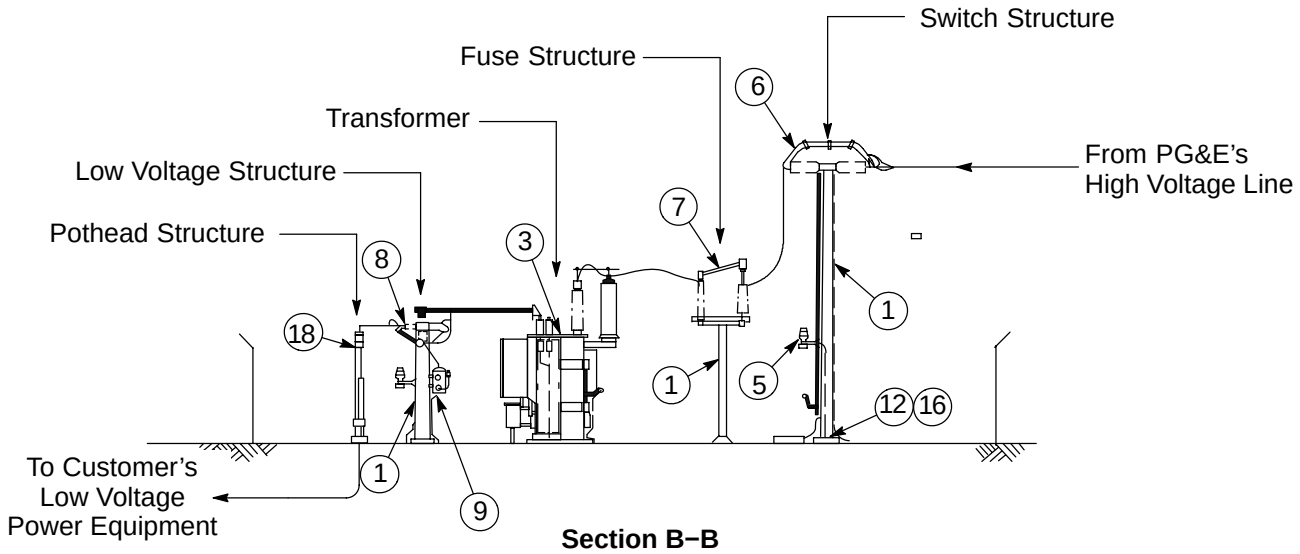

Section B−B

Revision Notes

Revision 01 has the following changes:

1. Updated the “References” section on Page 4.

Prepared by: ABB1

PAD-MOUNTED TRANSFORMER INSTALLED INDOORS

057521

Asset Type:	Electric Distribution	**Function:**	Design and Construction
Issued by:	M. L. Thibault (MLTC)	**Date:**	07-01-16

Rev. #10: This document replaces PG&E Document 057521, Rev. #09. For a description of the changes, see Page 22.

This document is also included in the following manuals:

- *Electric and Gas Service Requirements Manual* (Greenbook)
- *Electric Meter Work Practices*

Purpose and Scope

This document provides a guide for determining space requirements and illustrates recommended layouts to accommodate three-phase, loop, or radial circuit, pad-mounted transformers installed in a dry room located inside or adjacent to a customer's building. The room is usually provided by the customer.

General Information

1. A dry room is one which:
   A. Is located at/or above ground level, or
   B. Is located below ground level, and
      (1) Is completely contained within the building's foundation.
      (2) Is so designed that flood water entry is prevented.
      (3) Has sufficient gravity drainage to prevent water retention.
2. It is best that the doorway of the room opens to the street. However, the doors may open to a parking area or driveway provided that access is maintained from the street to the doors. The access path must be at least 11 feet wide.
3. The room must be large enough to accommodate a transformer capable of supplying 100% of the main switch capacity. Enlarging a transformer room is very costly and sometimes entirely impractical.
4. Eight feet of clear level space **must** be provided in front of the transformer cabinet, in order that the fuses and cables can be safely operated with live-line tools.
5. Ventilation design must conform to the requirements in Document 054163. The location of the vent shafts may be adjusted to meet local conditions. Cross ventilation must always be maintained.
6. The room itself must conform to all applicable state and local codes. The applicant is responsible for installing and maintaining any items such as sprinklers, smoke alarms, etc. that may be required by local authorities.
7. It is preferable to have access to a room via an outside entrance which would be accessible to authorized Company employees at all times (i.e., from parking lot, loading ramp, street, etc.). However, should it become necessary to accept access through the customer's premises, arrangements should be made to ensure that complete access for both equipment and authorized Company employees is available whenever required. Inadequate access will result in prolonged outages.
8. The room shall be designed with adequate security to permit entrance only to authorized personnel.
9. Cable troughs rather than conduits are required to allow the cables to be pulled out of the way of jacking and rolling the transformer out of the room.

10. The applicant will own and construct the transformer room and any associated substructures on its property. This provision is in accordance with the rates filed with and approved by the CPUC. The room must meet all city, county, and state codes and regulations, as well as PG&E's requirements for the safe installation, removal, and operation of its equipment.
11. PG&E must review and approve a not-for-construction drawing prior to the construction of the vault. Once approved, PG&E will forward it and the associated specification sheets to the applicant for his/her use and distribution to the general contractor. It is the responsibility of the applicant to notify PG&E of any design or construction changes. PG&E must review and approve these changes before proceeding with the design or construction of the vault.
12. It is the applicant's responsibility to contact PG&E's inspection department prior to the construction of the transformer room. PG&E will inspect the transformer room as it is being built to assure the proper installation and placement of various items required to ensure a safe working environment. PG&E equipment will not be installed until the room has been completed and the work area is clear of any debris. PG&E's inspection department must accept and sign off the room before energizing the new service. To schedule a room inspection appointment, please call_____.
13. No foreign objects shall pass through or terminate in the transformer room. The use of surface-mounted rigid electrical conduits and outlet boxes is allowed provided they are waterproof and approved by the local authorities.
14. Provide 3-hour fire rated concrete reinforced structure, including cable troughs, room walls, floor, and ceiling. Cover all exposed structural steel with 3-hour fire rated flameproof material. Seal off all openings to the interior of the building with approved caulking material. Intake and exhaust vents must be constructed with 3-hour fire dampers.
15. The doors must:
    A. Be 3-hour fire rated.
    B. Be capable of being secured while in the open position.
    C. Open sufficiently so that within 2' of the 8' 6" doorway the path for the transformer installation and removal must open up to at least 11' wide.
    D. Open sufficiently so as not to impede the sidewalk.
16. Provide a minimum of two lights with a minimum 30 foot-candle illumination. Provide convenient GFI duplex receptacles. Maintain 60 inches above the finish floor for receptacles and switches. Provide power for all equipment from the applicant's emergency power supply. Also see Document 054438.
17. Provide pulling eyes (Code 36-2029) with a working load of 10,000 lbs. times a safety factor of two. Install the pulling eyes 36" above the finished floor with 4 inches of clear space between the steel and wall surface. Center them directly across from the door opening and the end of each cable trough. Submit an engineered wet stamped drawing to PG&E for its approval for any pulling eye deviations. Also see Document 09219.
18. The room floor must support the total weight of PG&E equipment plus 2,000 lbs. and maintain a minimum of 10 feet ceiling height for moving the equipment.

Secondary Configuration

19. The secondary configuration depends on the main switch size and whether or not there is an associated fire pump main.
    A. For main service of up to 7 sets of cables per Greenbook Document 063928 **without** a separate fire pump service, or where the combined mains of the service and fire pump do not require more than 8 cables, the secondary are cables in an open trench to conduits stubbed through the right-side or rear vault wall (see Figure 1 on Page 5). Alternately, the cables may terminate on a wall-mounted bus stub.
    B. For main service of up to 7 sets of cables per Greenbook Document 063928 **with** a separate fire pump service, the secondary is made of cables in an open trench to wall-mounted bus stubs that feed adjacent stubs to the fire pump (see Figure 4 on Page 8).
    C. For bus duct main service per Greenbook Document 063928 **without** a separate fire pump service, the applicant provides a bus duct termination through the vault wall (see Figure 7 on Page 11).
    D. For bus duct main service per Greenbook Document 063928 **with** a separate fire pump service, the secondary is made of cables in an applicant-installed cable tray from the side of the transformer to wall-mounted bus stubs that then also feed an adjacent bus stub to the fire pump (see Figure 9 on Page 13).

E. The fire pump main must be dedicated to emergency equipment and must not exceed 2,000 A. With combined services, running the emergency equipment will require curtailing regular load. There shall be a permanent sign on or near the fire pump controls indicating that regular load must be curtailed when running the fire pumps.

20. Provide a _____CFM forced air ventilation system from outside air via direct-drive, AMCA Type A or B spark resistant, fan with an explosion proof motor (intake) and high exhaust vent opening. Install 1/2-inch mesh screen on both sides of the fan assembly (see Document 054163). Install a remote thermostat sensor at the exhaust opening and a separate thermostat control 60 inches above finished floor. Set thermostat between 85°F and 90°F . All vent openings shall have a minimum of 576 square inches of opening.

21. Provide two 3/4" X 12" ground rods with 12" exposed above finished floor, as shown in the plan view. Ground rods are not to be altered in any way and must maintain a minimum of 6 feet of separation between them. Install #2 Solid CU ground wire in a loop as indicated between the ground rods. PG&E will inspect all ground rods prior to covering. Provide tests and documentation for deviations to this procedure to substantiate the resistivity of the ground rods (see Document 060462).

22. Provide a 6-inch removable sill across all entrances for oil containment after transformer(s) are installed. Caulk all gaps leading to the interior of the building. Provide a Corbin lock set with tumbler (CL3357-N2D-626 or CK4257-GRC-626) for the vault door(s). PG&E will key the tumblers. Provide provisions to lock the door in the open position for emergency purposes.

23. All exposed metal in the vault must be grounded.

24. Room to be designed and built as a Class 1, Zone 1, reference California Subchapter 5, Electrical Safety Orders, Article 59, hazardous (classified) locations.

References	Location	Document
Draw Bolt for Electric Manholes	ELS	09219
Corrosion Resistant Ground Rods and Ground Rod Clamps	UG-1: Connectors/Greenbook	013109
Connectors for Insulated Cables Underground Distribution Systems	UG-1: Connectors/Greenbook	015251
Cable Support for Underground Use	UG-1 Splices	028077
Tags for Identifying Underground Cables and Equipment	UG-1: Marking	033582
Premolded 200-Amp Terminations for Primary Underground Cable	UG-1: Terminations	035314
Cables for Underground Distribution	UG-1: Cable	039955
Service Entrance from Underground Vault Using Bus Bars	UG-2: Transformers	041352
Loop-Style, Three-Phase, Pad-Mounted Transformers	UG-1: Transformers/EMWP	045290
Installation of Loop-Style, Three-Phase, Pad-Mounted Transformers	UG-1: Transformers	045291
Concrete Pad for Three-Phase, Loop-Style, Pad-Mounted Transformers	UG-1: Transformers/Greenbook	045292
Ventilation of Vaults and Manholes	Electric Design Manual	054163
Installation of Wiring for Lighting and Auxiliary Equipment in Vaults and Manholes	UG-2: Enclosures	054438
Terminating Underground Electric Services 0–600 Volts in Customer-Owned Facilities	UG-1 Services/Greenbook/EMWP	058817
Grounding of Underground Equipment	UG-1: General	060462
Fault Indicators for Underground Application	UG-1: General	061683
Underground Conduits	UG-1: Conduits	062288
Methods and Requirements for Installing Commercial Underground Electric Services 0-600 Volts to Customer-Owned Facilities	UG-1: Services/Greenbook	063928

References (continued)	Location	Document
Requirements for Bus Duct Entrance Termination Unit for Use With Pad-Mounted Transformers	UG-1: Services/Greenbook	063929
Corporation Padlock	TIL	068200

Table 1 Bill of Materials for Three-Phase, Pad-Mounted Transformer

Item	Description	Code	Document
1	Transformer, Pad-Mounted, Three-Phase (as required)	–	045290
2	Cable, Insulated, Single-Conductor, Primary, 1/0 Minimum	–	039955
3	Cable, Insulated, Single-Conductor, 600 V (size as required)	–	039955
4	Conduit (size as required) (by applicant)	–	062288
5	Ventilating Fan (as required) (by applicant)	–	054163
6	Lighting (as required) (by applicant)	–	054438
7	Wire, Ground, Number 2 AWG Solid, Bare Copper (by applicant)	290074	–
8	Terminal Connector, Compression-Type	–	015251
9	Connector, Ground Terminal	303214	
10	Clamp, Ground Rod, 3/4”	187017	013109
11	Anchor Bolt, 3-1/2” x 1/2”	190445	–
12	Padlock, Corporation (for exterior locking)	016583	068200
13	Cable Sectionalizing Tag	–	033582
14	Phase Description Tag	–	
15	High Voltage/Maintain 8’ Clearance Label	621599	
16	Transformer Number Decal	–	
17	Ground Rod, 3/4” x 12’ (by applicant)	010098	013109
18	Grating, Steel, Removable, Non-Skid (see Detail D on Page 20) (by applicant)	–	–
19	Duct Spacers (see Detail C on Page 20) (by applicant)	–	–
20	Insulated Bushing Well Plug	300486	035314
21	Spare Concentric Wire	–	–
22	Connector, Ground Terminal	302314	–
23	200-Amp Primary Termination: Load-Break or Dead-Break Elbow Receptacles	–	035314
24	200-Amp Bushing Insert: Load-Break (300481) or Dead-Break (303920)	–	

Pad-Mounted Transformer Installed Indoors

Layout for Up to 7 Service Cables

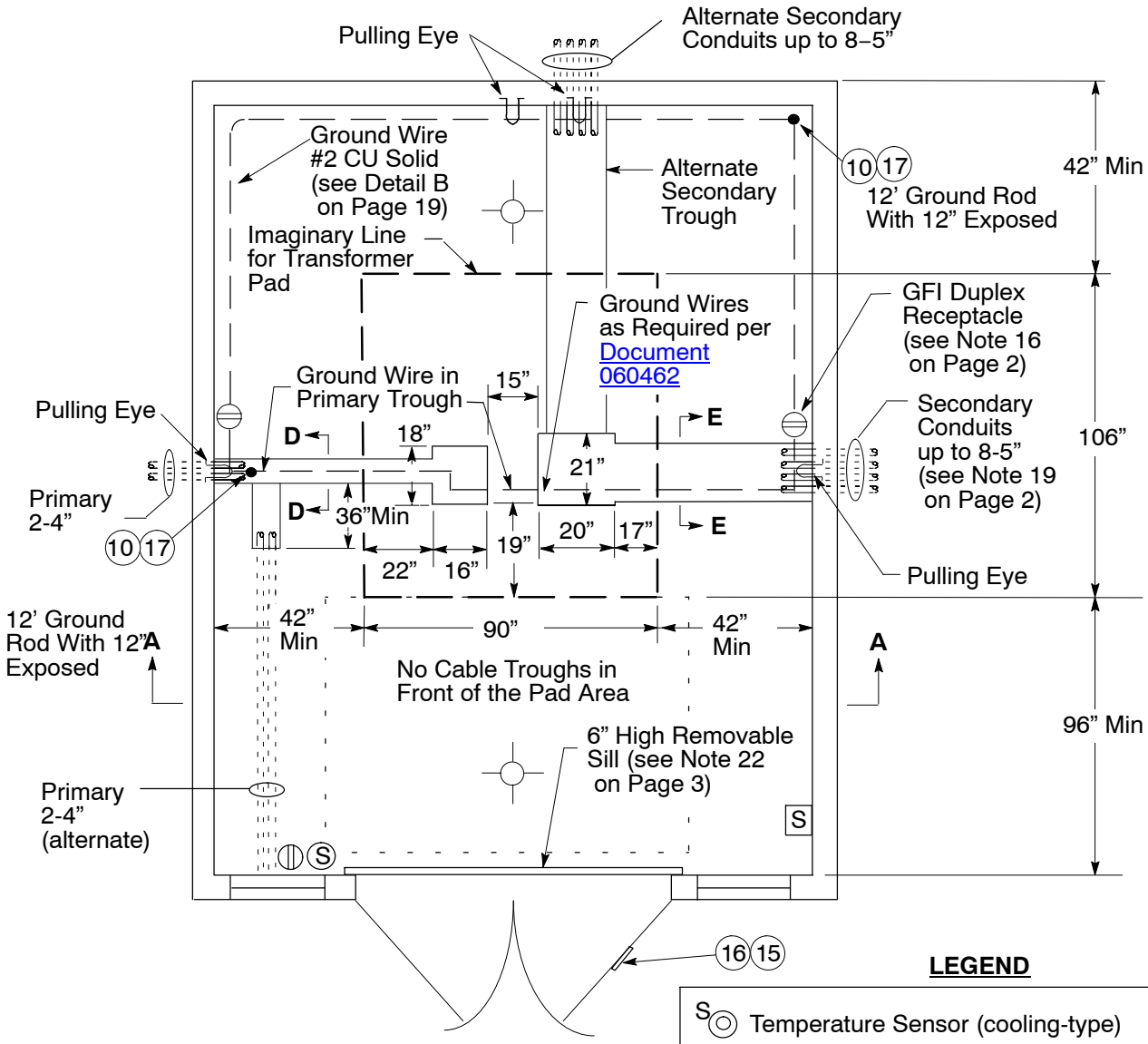

Figure 1
Dry Vault – Plan View
For Up to 8 Sets of Service Cables
(see Note 19 on Page 2)

LEGEND

- S Temperature Sensor (cooling-type)
- T Thermostat Control (60” above finished floor)
- S Fan Cutoff Switch (60’ above finished floor)
- GFI Duplex Receptacles (60” above finished floor)
- S Light Switch (60” above finished floor)
- 3/4” x 12” Ground Rod
- Light Fixtures
- Pulling Eye (see Note 17 on Page 2)

Note

1. Primary may also be routed to back wall of vault. Primary may not be routed from primary section of transformer to the back wall underneath the transformer.

Layout for Up to 7 Service Cables (continued)

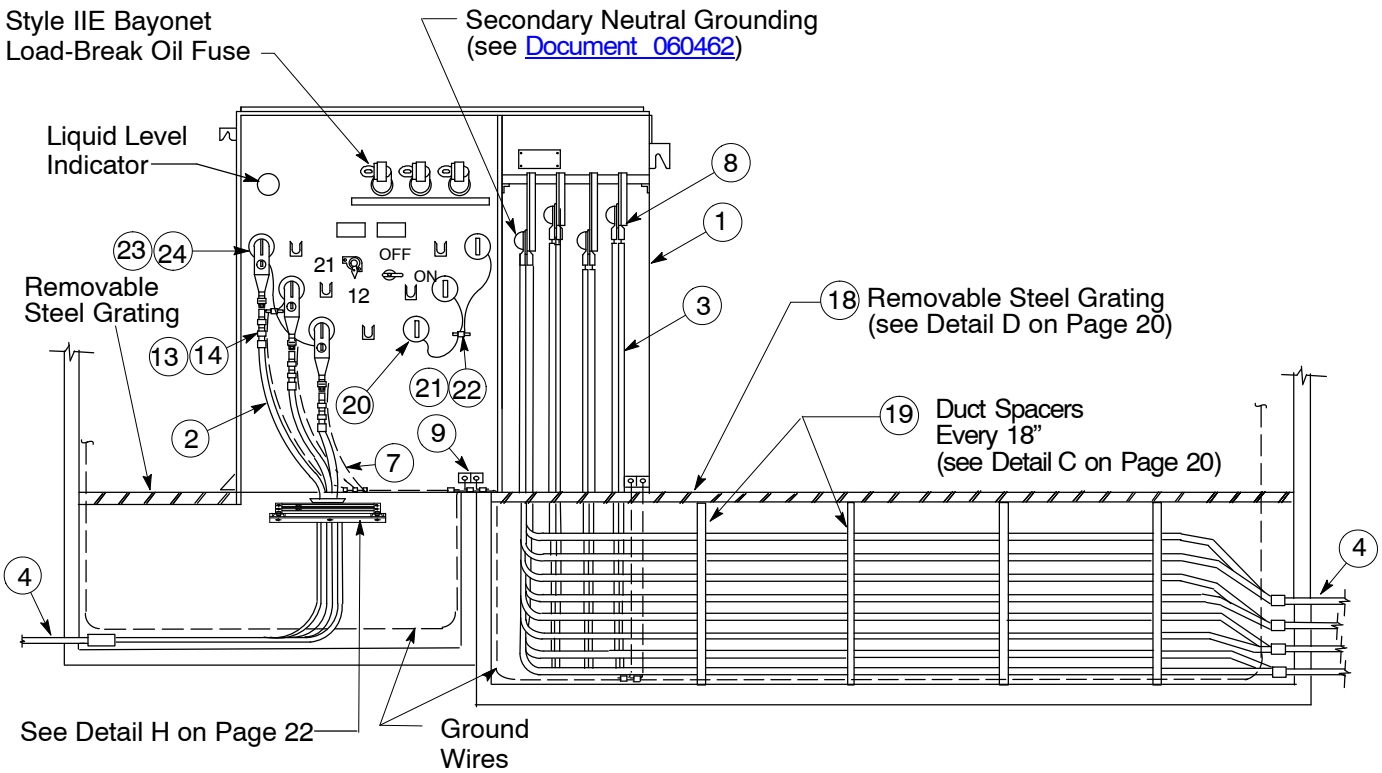

Section A–A

Figure 2
Transformer Installed
Front View
For Up to 8 Sets of Service Cables
(radial primary installation shown)

Layout for Up to 7 Service Cables (continued)

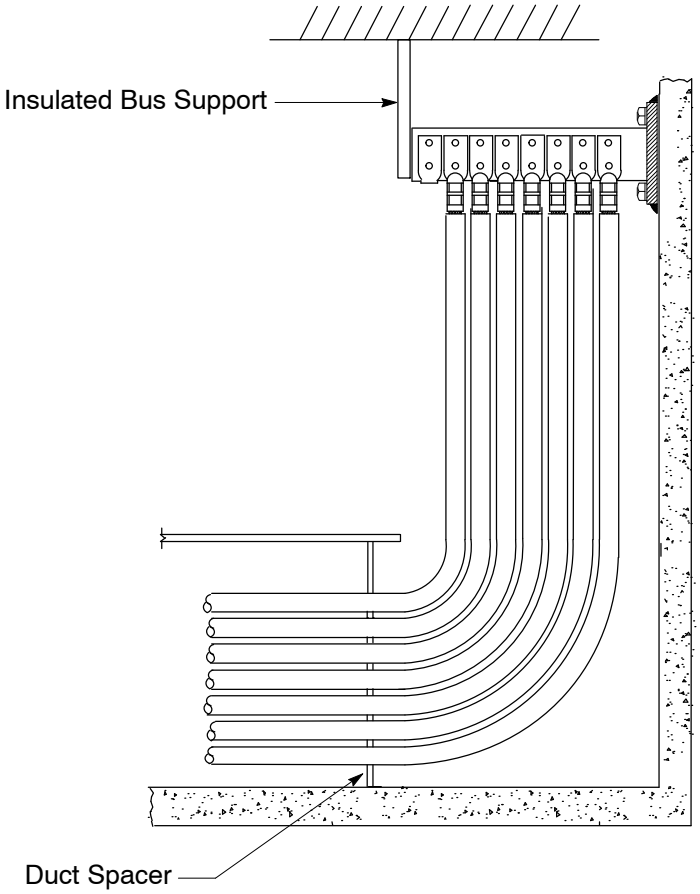

Figure 3
Alternate Secondary Cable Trench End for Bus Duct Termination
Side View
(see Details D, E, F on Page 21)

Layout for up to 8 Service Cables with Separate Fire Pump

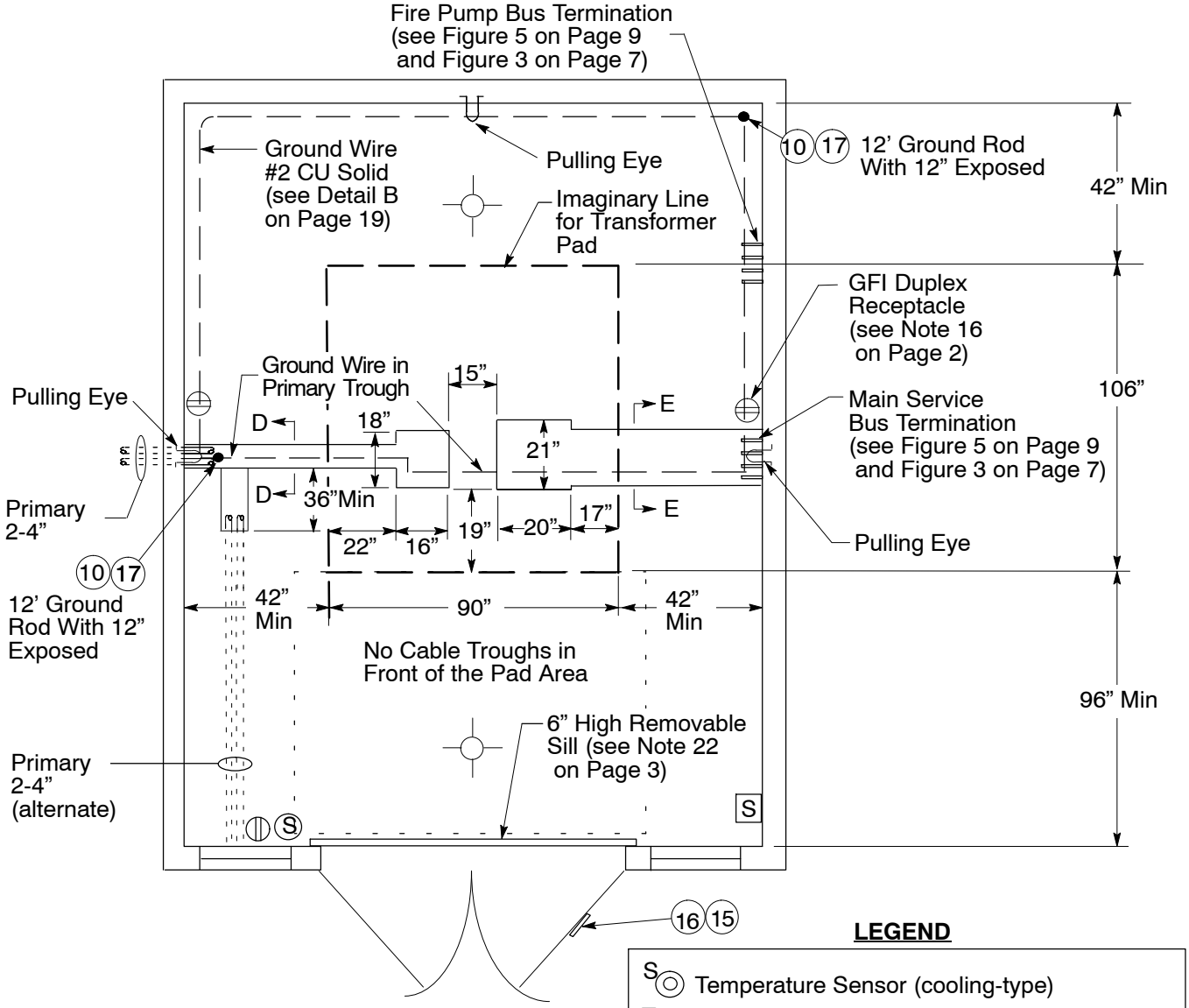

Figure 4
Dry Vault – Plan View
For Main Service of Up to 7 Sets of
Cables With Separate Fire Pump Service
(see Note 19 on Page 2)

LEGEND

- S Temperature Sensor (cooling-type)
- T Thermostat Control (60" above finished floor)
- S Fan Cutoff Switch (60' above finished floor)
- GFI Duplex Receptacles (60" above finished floor)
- S Light Switch (60" above finished floor)
- 3/4" x 12" Ground Rod
- Light Fixtures
- Pulling Eye (see Note 17 on Page 2)

Notes

1. Primary may also be routed to back wall of vault. Primary may not be routed from primary section of transformer to the back wall underneath the transformer.
2. All exposed grounded metal bolts within 10" of bus bars shall be suitably insulated.
3. Barrier is not needed if firestop supports the bus and is smoke proof.

Layout for up to 8 Service Cables with Separate Fire Pump (continued)

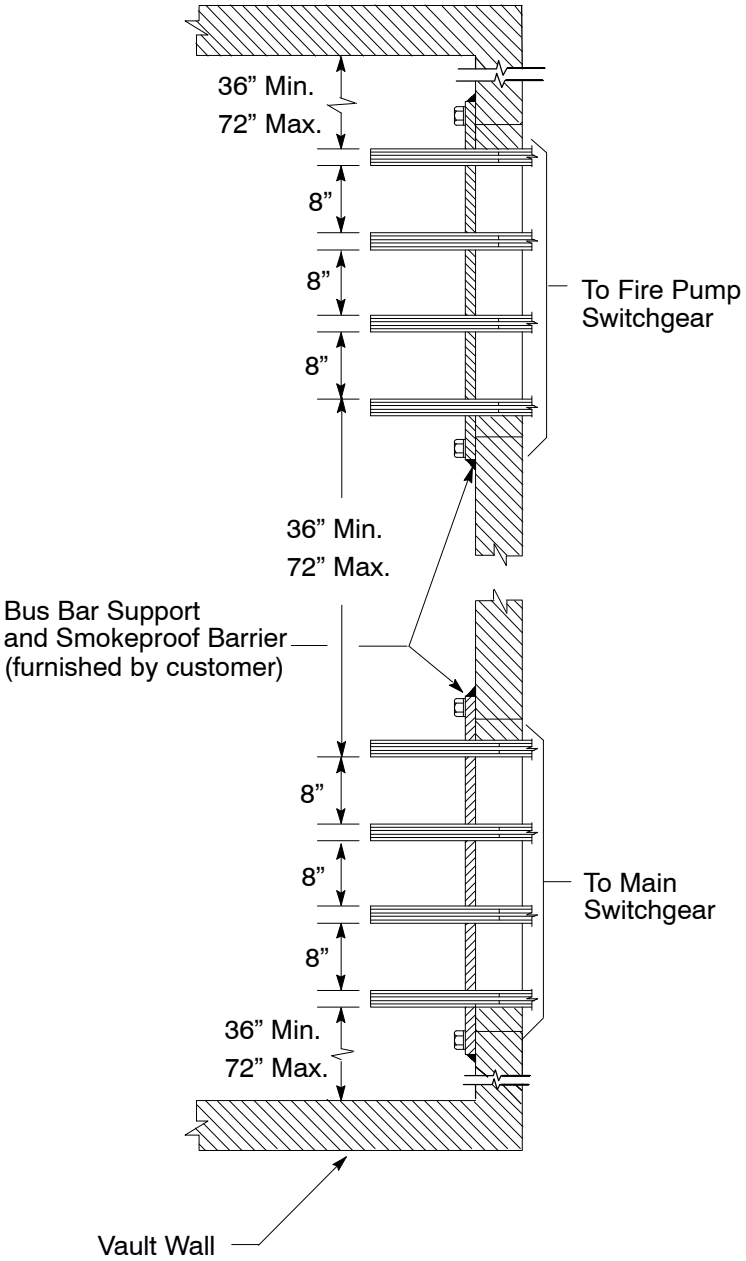

Figure 5
Service Connection – Top View
(see Details D, E, F on Page 21)

Layout for up to 8 Service Cables with Separate Fire Pump (continued)

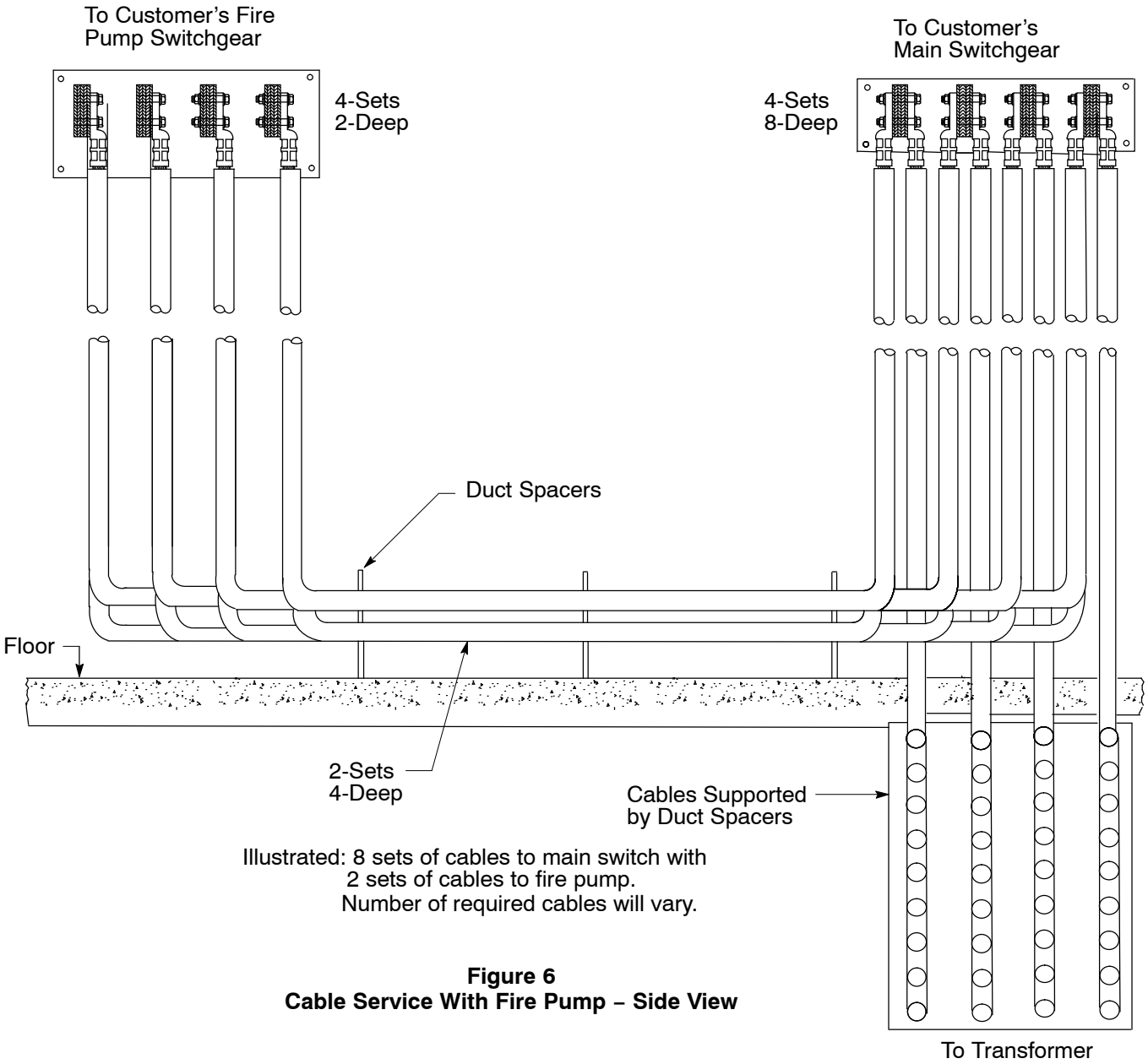

Illustrated: 8 sets of cables to main switch with
2 sets of cables to fire pump.
Number of required cables will vary.

Figure 6
Cable Service With Fire Pump – Side View

Layout for Bus Duct with no Separate Fire Pump

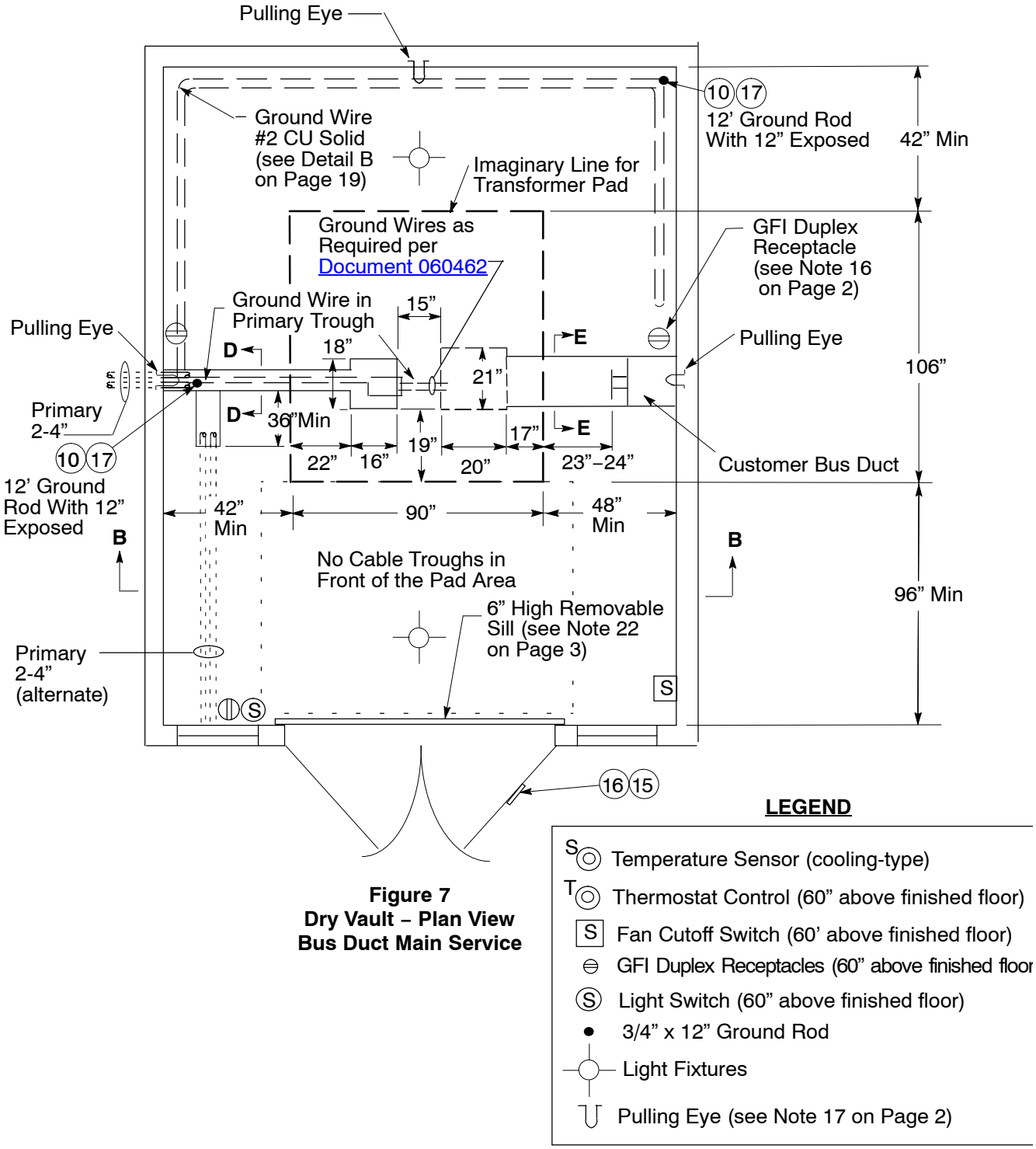

Figure 7
Dry Vault – Plan View
Bus Duct Main Service

Note

1. Primary may also be routed to back wall of vault. Primary may not be routed from primary section of transformer to the back wall underneath the transformer.

Layout for Bus Duct with no Separate Fire Pump (continued)

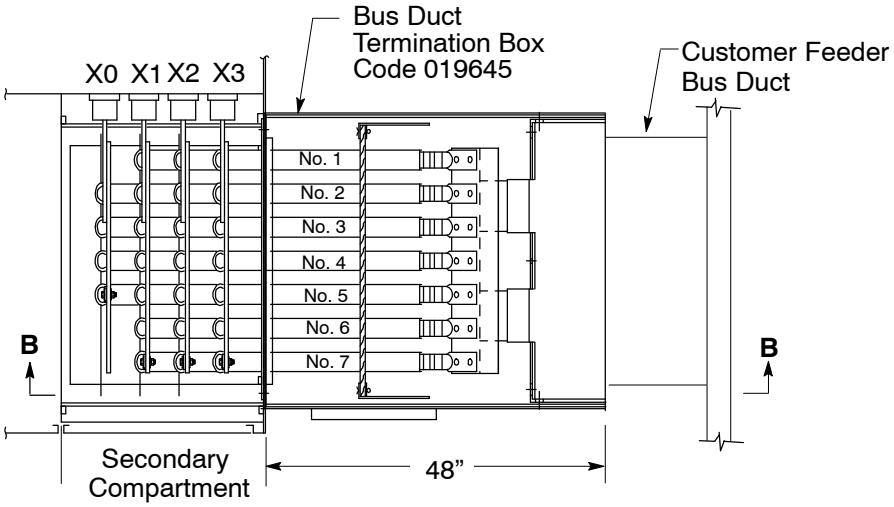

Detail A
Top View – Bus Termination

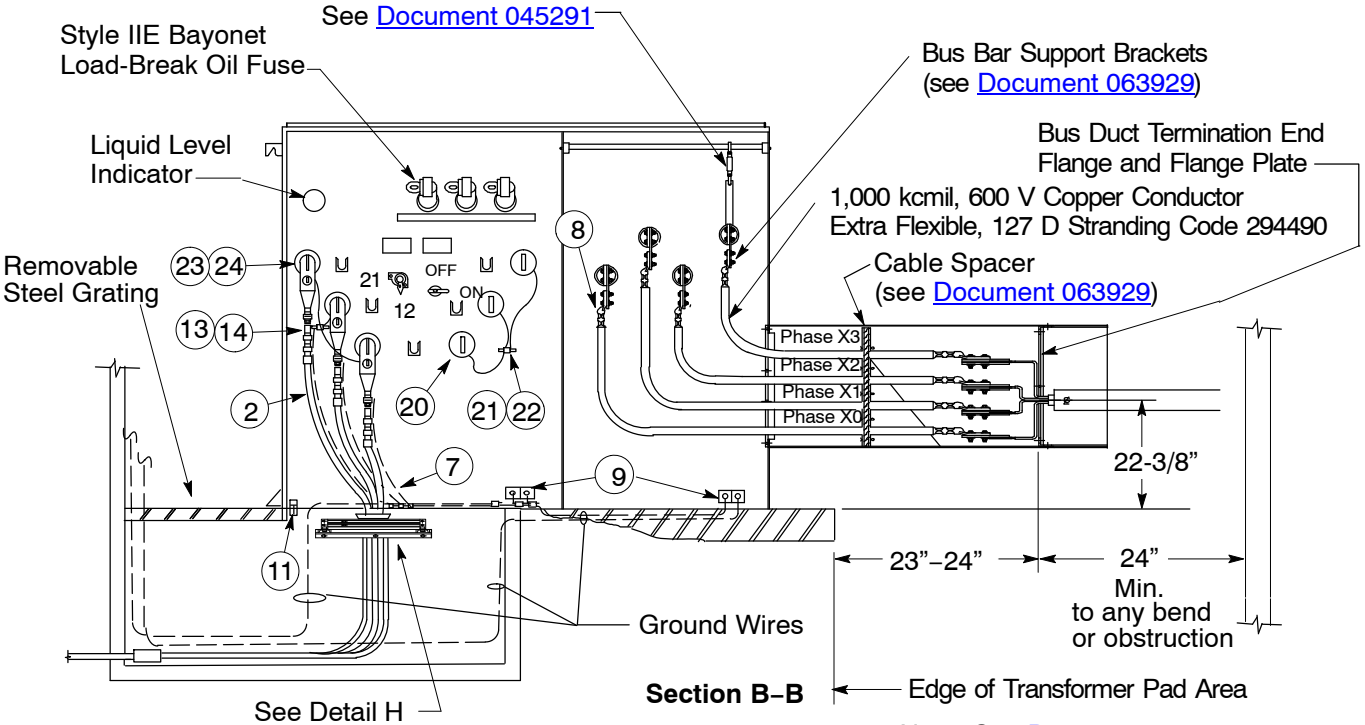

Figure 8
Bus Duct Termination

Note: See Document 063929 for bus duct termination box details

Layout for Cable Tray Service with a Separate Fire Pump

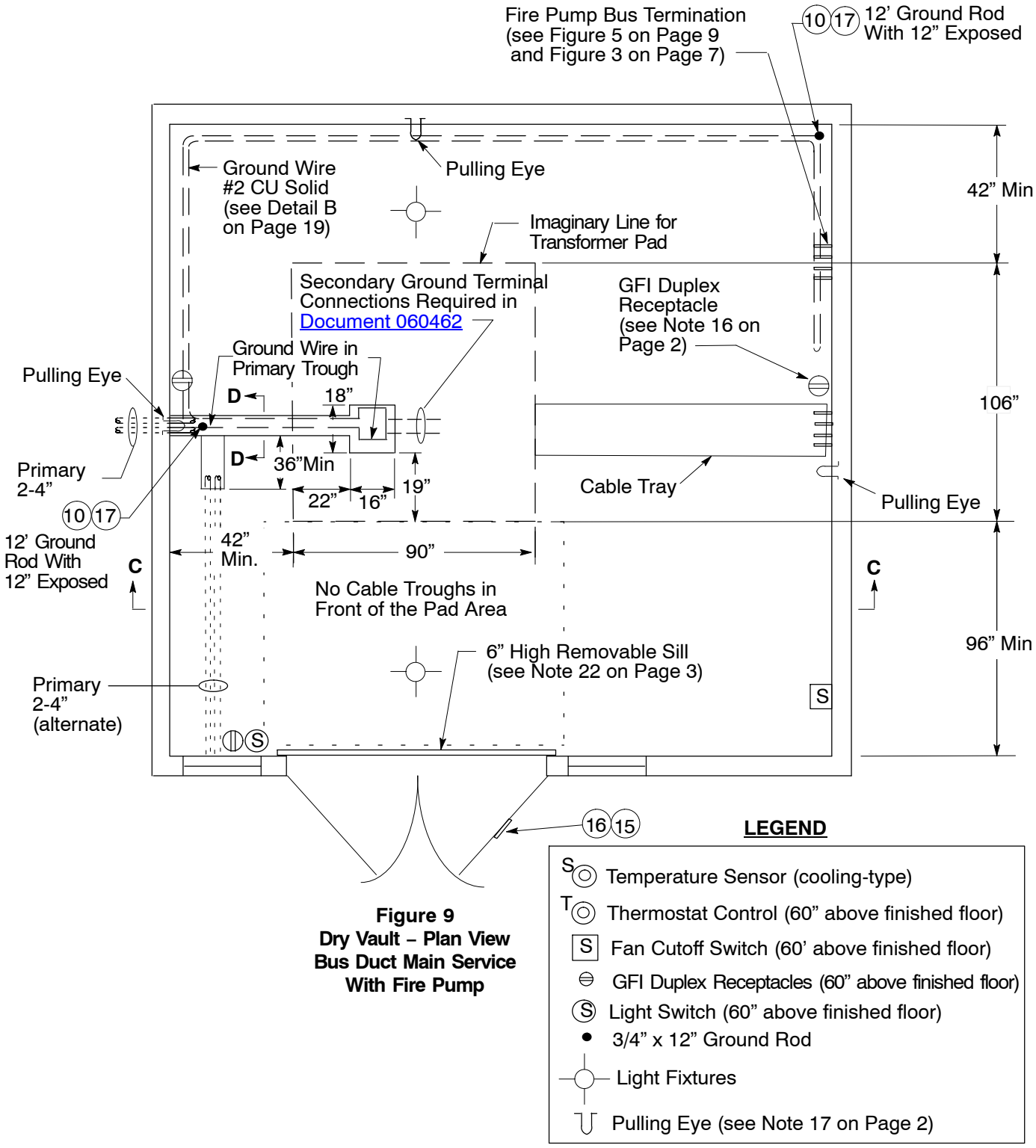

Figure 9
Dry Vault – Plan View
Bus Duct Main Service
With Fire Pump

Note

1. Primary may also be routed to back wall of vault. Primary may not be routed from primary section of transformer to the back wall underneath the transformer.

Layout for Cable Tray Service with a Separate Fire Pump (continued)

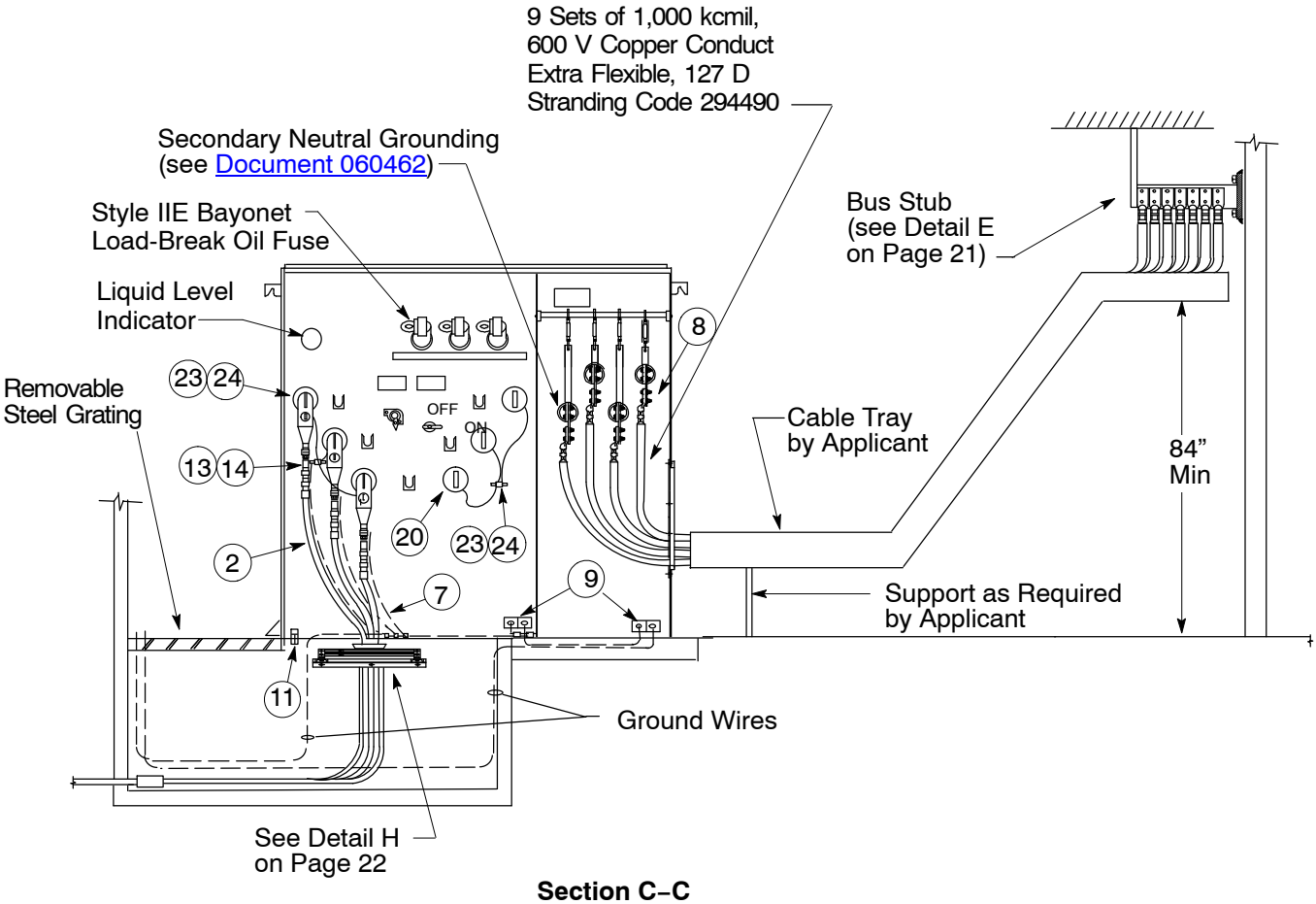

Section C–C

Note: Cable tray shall be vented, with rollers, minimum of 36” wide and 3-1/2” deep.

Figure 10
3,000 A – 4,000 A Pad-Mounted Service Cable Enclosure
With Fire Pump

Forced Air Details

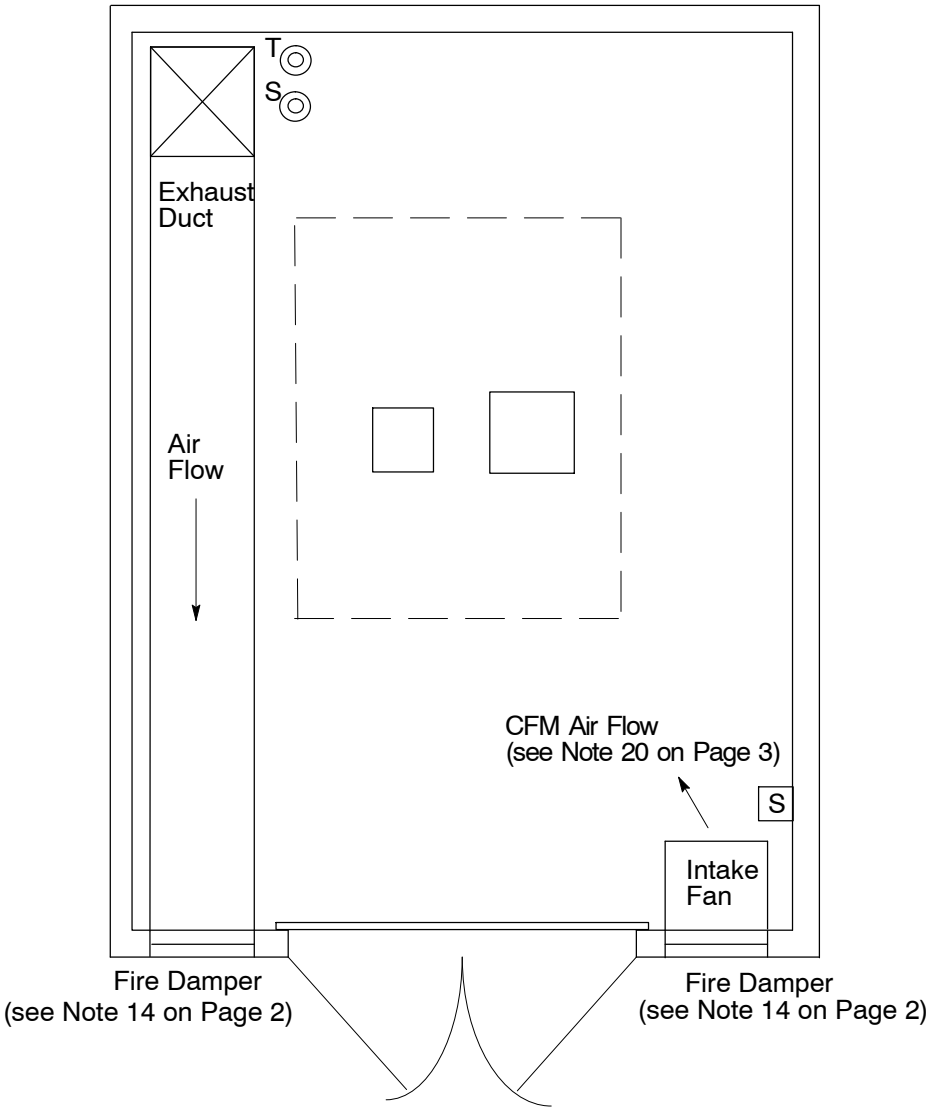

Figure 11
Plan View – Detail of Forced Air Ventilation

Forced Air Details (continued)

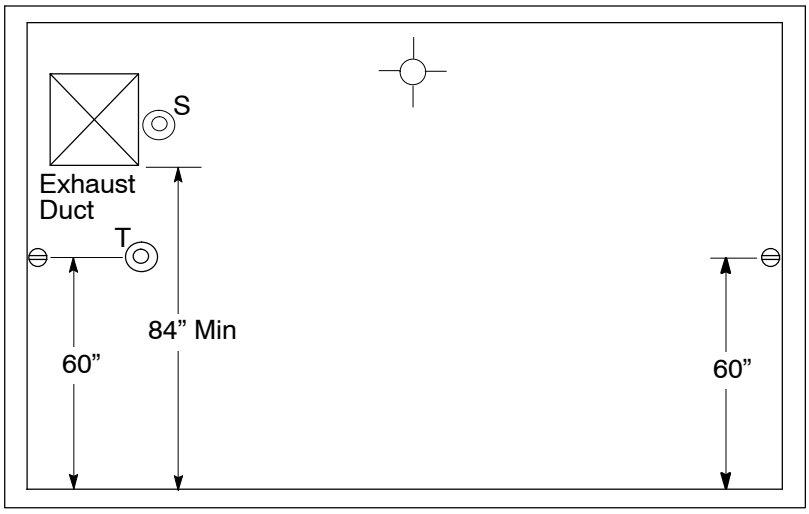

Figure 12
Section A–A

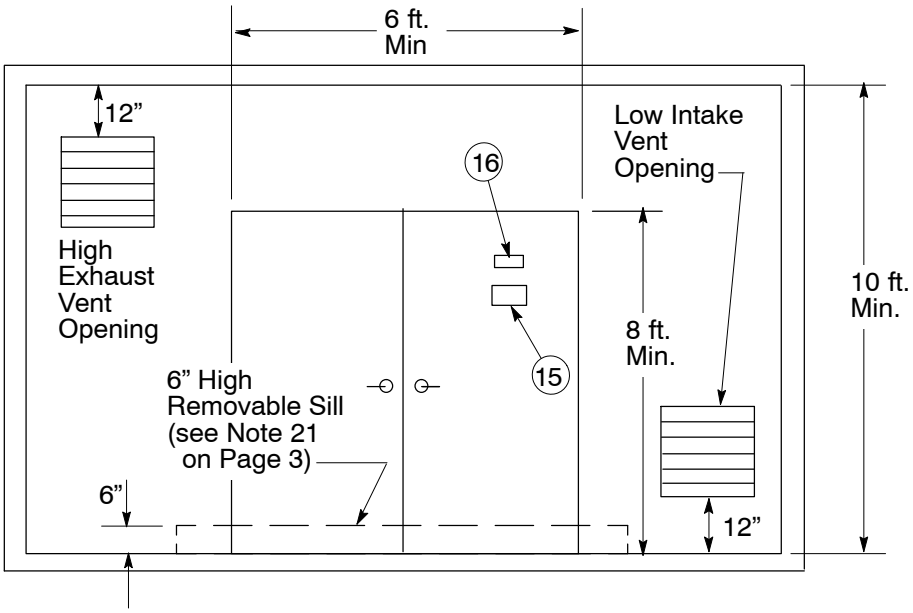

Figure 13
Front View – Ventilation and Entrance Details
When Only Personnel Access is Required

Forced Air Details (continued)

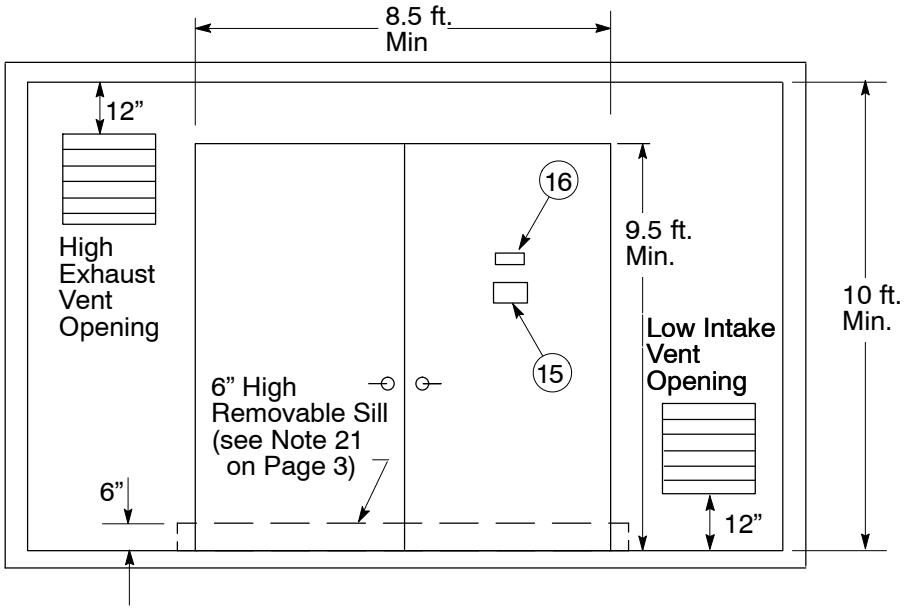

Figure 14
Front View – Ventilation and Entrance Details

Transformer Access Through Sidewalk

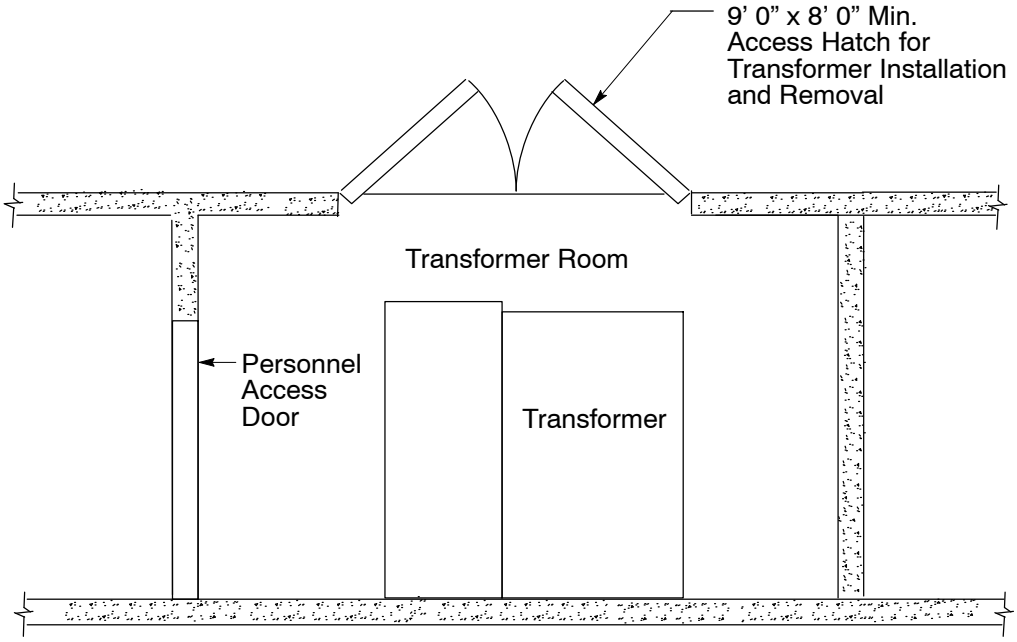

Figure 15
Transformer Access Through Sidewalk

Notes

1. There must be vehicular access for a crane to lift the transformer through the hatch.
2. A personnel access door from an accessible area is required to allow access for operation and maintenance.
3. The personnel access door shall be 6’ wide by 8’ high, minimum.

Cable Trough Details

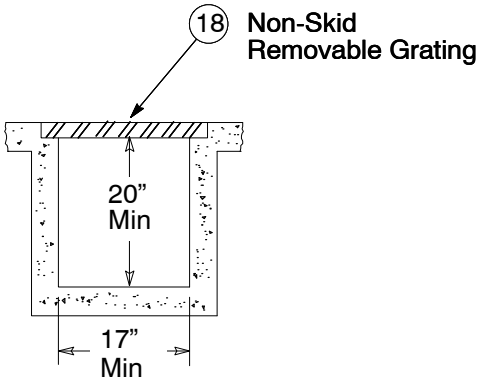

Section D–D

Figure 16
Primary Cable Trough

Note: 3-hour fire rated
(see Note 14 on Page 2)

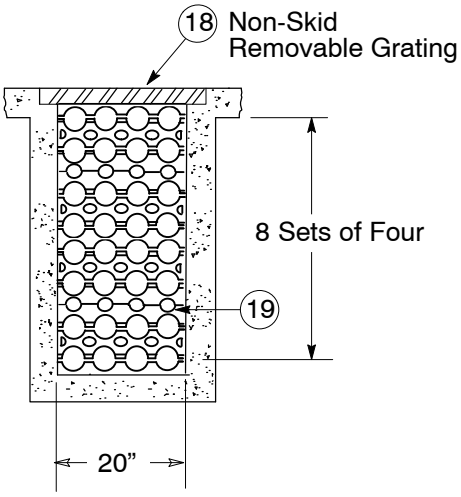

Section E–E

Figure 17
Secondary Cable Trough for
400 A – 2,500 A Mains

Note: Size as required to fit duct spacers. Dimensions shown are for Formex four way spacer for 2” conduit with 2” separation (see Detail C on Page 20).

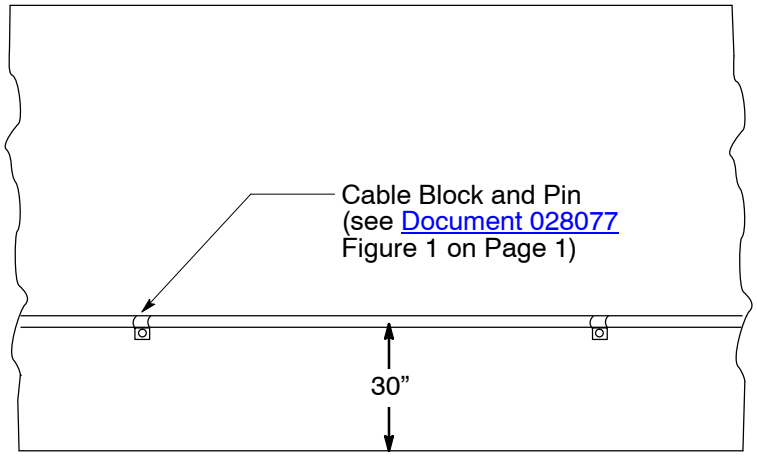

Detail B
Mounting Ground Ring Bus
to Vault Wall

Cable Trough Details (continued)

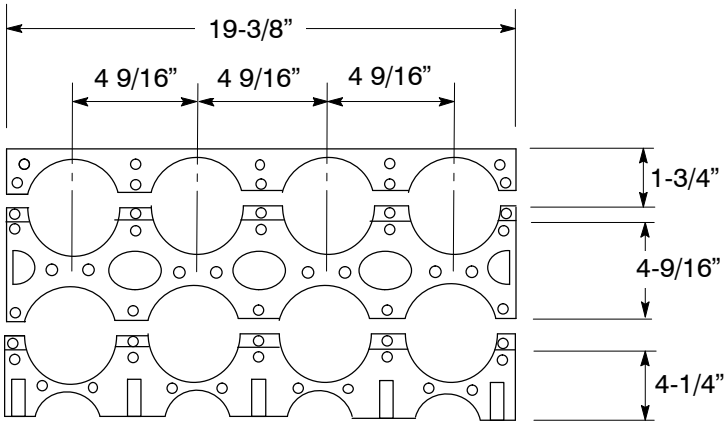

Detail C
Formex Four-Way Duct Spacer 2” Duct With 2” Separation

1. Place one duct spacer every 18” from secondary window edge.
2. Functional equivalent may be used.
3. Use one 4-hole spacer with 2” holes for each set of 1000MCM cables, for example:
   – for five sets of cables each spacer set is 4 holes wide by 5 layers deep.
   – for seven sets of cables each spacer set is 4 holes wide by 7 layers deep.

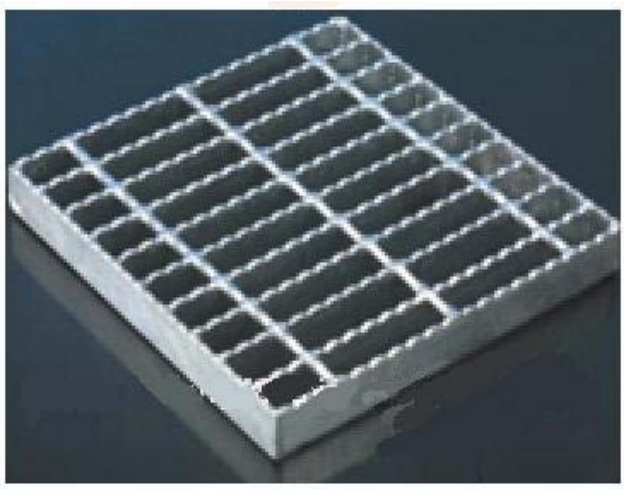

Detail D
Typical Non-Skid Grating

1. Size and numbers as required.
2. Maximum weight of each piece shall not exceed 50 lbs.
3. Open area must be at least 45%.

Bus Bar Termination Details

1. All exposed grounded metal bolts within 10” of bus bars shall be suitably insulated.
2. Barrier is not needed if firestop supports the bus and is smokeproof.

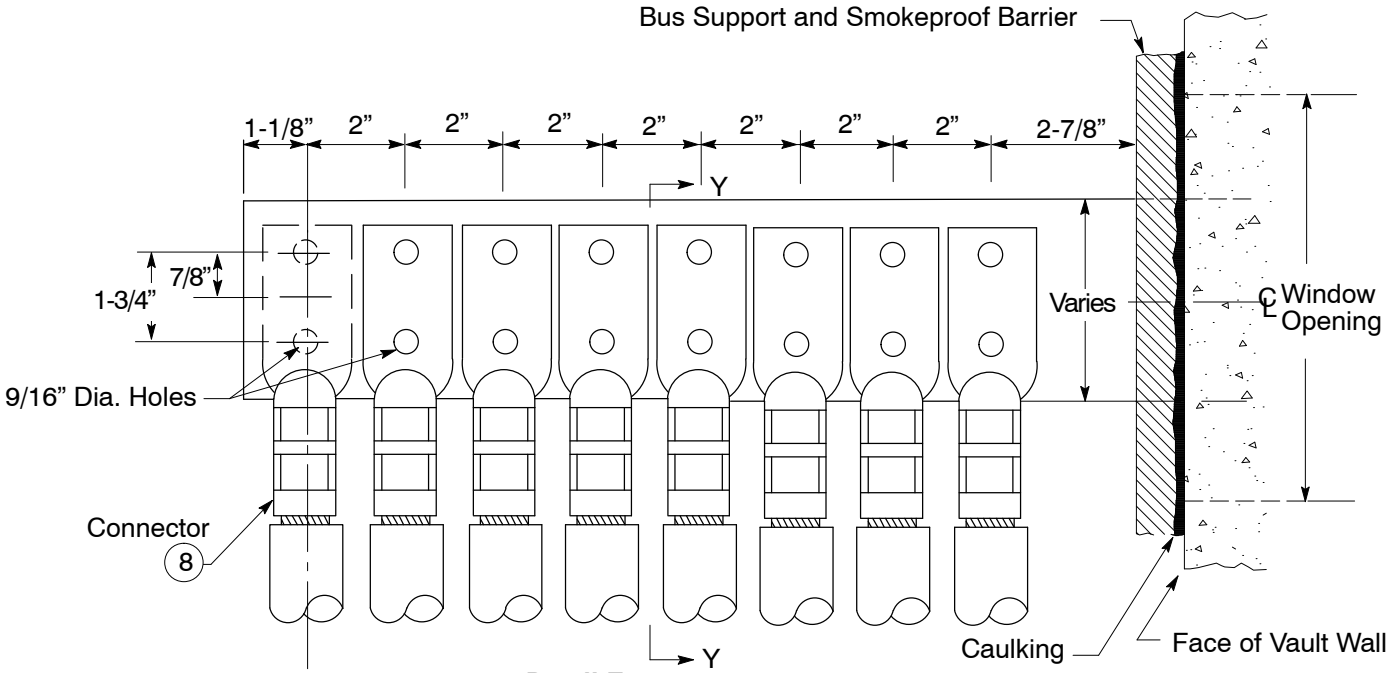

Detail E
Connection to Customer’s Bus Bar

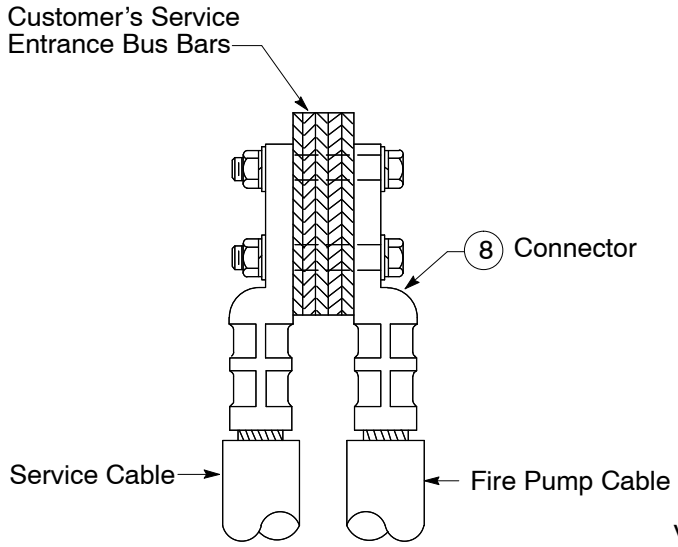

Detail F
Section Y–Y

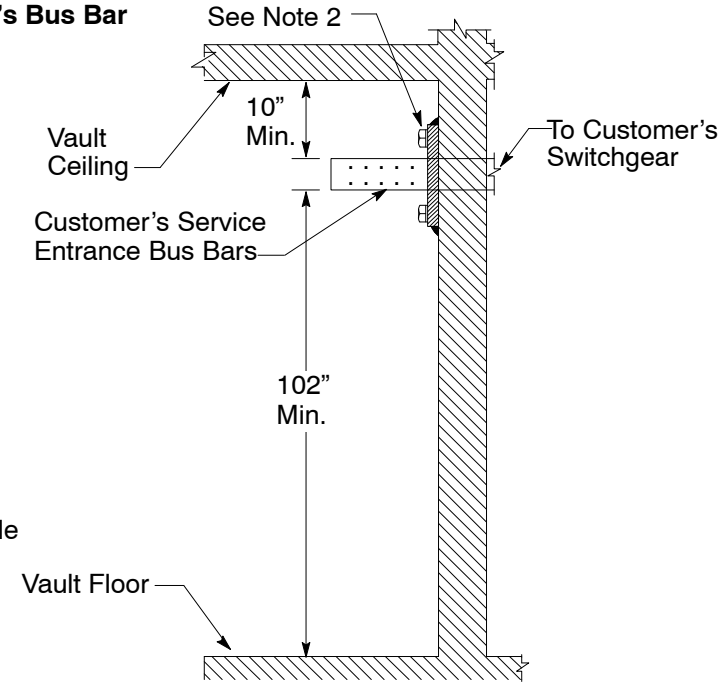

Detail G

Primary Cable Support Details (continued)

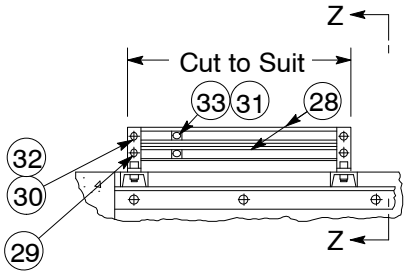

Detail H
Cable Termination Support

Table 2 Primary Cable Termination Support

Item	Quantity	Description
25	–	Bolt, Machine 1/2” x 4”, Square Head, Galvanized
26	–	Bolt, Machine, 1/2” x 1-1/4” Hexagonal, Head, Galvanized
27	–	Bolt, Machine, 3/8” x 1” Hexagonal, Head, Galvanized
28	2	Channel, 1-1/4”, Unistrut A-1000
29	2	90° Angle Fitting, 3/16”, Unistrut A-1326
30	4	Spring Nut, 3/8”, Unistrut A-1008
31	12	Spring Nut, 1/4”, Unistrut A-1006-1420
32	4	Capscrew, Hexagonal Head 3/8” x 1” Galvanized
33	12	Capscrew, Hexagonal Head 1/4” x 1” Galvanized

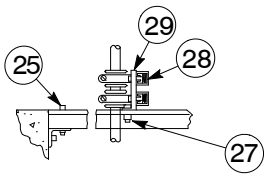

Section Z–Z
Support Mounted Above Floor Surfaces
(all mounting holes, drill to suit)

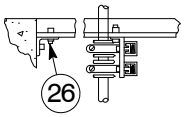

Alternate Section Z–Z
Support Mounted Below Floor Surface

Revision Notes

Revision 10 has the following changes:

1. Added Note 1 primary routing on Pages 5, 8, 11, and 13.
2. Revised Section A–A on Page 6.
3. Revised Detail C on Page 20.

Prepared by: SXZO

AGRICULTURAL OVERHEAD SERVICE 300 HP OR LESS

058087

Asset Type: Electric Metering
Function: Design and construction
Issued by: Lisseth Villareal (LDV2)
Date: 07–01–16

Rev. #13: This document replaces PG&E Document 058087, Rev. #12. For a description of the changes, see Page 12.

This document is also included in the following manual:

- *Electric and Gas Service Requirements* (Greenbook)
- *Electric Meter Work Practices*

Purpose and Scope

This document establishes and illustrates the required methods of providing overhead agricultural service of 300 horsepower (hp) or less.

General Information

1. This document applies to agricultural loads rated 5 through 300 hp, provided both of the following conditions are met.
   A. The service is overhead.
   B. The load current does not exceed the ampere limitation of the service entrance equipment or PG&E facilities.
2. Service Request: The customer should make application for service and verify the available service voltage with PG&E as far in advance of construction as possible. The customer should then notify his pump company of the available PG&E service voltage.
3. Available Service Voltage:
   A. Non-residential single-phase loads to a maximum of 7-1/2 hp shall be served at 120/240 V, single-phase, 3-wire.
   B. Three-phase motors of 5 hp, but less than 30 hp, will normally be served at 120/240 V, three-phase, 4-wire, but may be served at 120/208 V or 277/480 V at the customer's option and if capacity is available from existing facilities.
   C. Single or grouped three-phase motors of 30 hp to 50 hp can be served from an open-delta transformer producing service voltage at 120/240 V, three-phase, 4-wire, if the customer has a combination of single and three-phase loads, otherwise they must be served at 120/208 or 277/480 V, three-phase, 4-wire.
   D. Single or grouped three-phase motors from 60 hp to 125 hp shall be served at 120/208 V or 277/480 V, three-phase, 4-wire.
   E. Single or grouped motors of 150 hp to 300 hp shall be served at 277/480 V, three-phase, 4-wire.
4. General Requirements: PG&E shall furnish and install the overhead service drop, meters and metering current transformers. Unless otherwise stated, all other materials shall be furnished, installed and maintained by the customer and shall comply with the requirements of PG&E. It shall be the responsibility of the customer to ascertain and comply with the requirements of governmental authorities having jurisdiction. In areas where no provision is made for inspection by local authorities, the applicable state regulations shall apply. Local ordinances may include wiring requirements in addition to those shown in this document or in the National Electrical Code (NEC). Consult inspection authorities for requirements, city or county permits, and inspections that may be required before service can be connected.
5. Clearances: All overhead conductors may not be in a vertical plane **any** closer than 10 feet from any wellhead.

6. Service Pole: When a service pole is required, it shall have a minimum length of 25 feet (set 4-1/2 feet in the ground) unless a longer pole is needed for required ground clearance or to accommodate additional PG&E equipment. The pole will be located at least 10 feet from the motor or load and in such a position that the overhead conductors and any required guy will not interfere with work done at the motor or load. A PG&E pole with high-voltage conductors (over 600 V) shall not be used as a service pole. Refer to Document 025055 for further information on the requirements for customer-owned poles.

7. Service Entrance Conductor:

   A. The conductors shall be sized and installed in accordance with the applicable requirements of the NEC.

   B. A minimum of 18 inches of conductor shall be provided outside of the service head to make connection with PG&E's service drop.

   C. When the meter enclosures shown in Figure 9 through Figure 11 on Page 10 are used, the customer shall furnish and connect all line and load-side service entrance conductors.

   D. When metering equipment requiring a current transformer (Figure 12 on Page 11 through Figure 15 on Page 11) is used, the customer shall furnish lugs and connect conductors to the line and load sides of the current-transformer mounting base. The unmetered conductor may be cable, but shall be continuous and unspliced in the current-transformer cabinet and shall be located so as to not interfere with the current-transformer installation.

8. Service Entrance Conductor Covering for Service Poles:

   A. All wires between the service head and the meter shall be enclosed in any of the following:

      (1) galvanized rigid steel conduit

      (2) rigid aluminum conduit

      (3) electrical metallic tubing

      (4) intermediate metallic conduit

      (5) PVC plastic conduit having a minimum wall thickness of 0.15 inches (Schedule 40 for 2" PVC conduit or larger, Schedule 80 for 1-1/2" PVC conduit or smaller)

      All fittings shall be raintight.

   B. If PVC plastic conduit is used, it need not be covered. If rigid steel or other approved metallic conduit is used, it shall be enclosed with either 1/4-inch thick fiber conduit,1-1/2-inch thick wood covering or PVC "U" shaped moulding for a minimum distance of 8 feet below the lowest open service entrance conductor. The covering shall be strapped to the pole at intervals not greater than 3 feet (see Pages 7 and 8).

9. Grounding: The customer shall be responsible for bonding and grounding all exposed, non-current-carrying metal parts. Bonding and grounding shall be in accordance with the NEC and local ordinances. PG&E prefers, but does not require, the grounding electrode conductor wire to be protected against physical damage by rigid steel conduit or armored cladding.

10. Metering Requirements:

    A. The arrangement of service equipment shall place the meter and current-transformer cabinet (if required) on the source side of the customer's service switch or breaker.

    B. 125 hp or less: The customer shall provide and install a self-contained, meter socket enclosure, approved by PG&E, for the available service voltage, in accordance with Table 1 on Page 5 and Figure 9 through Figure 11 on Page 10.

    C. 130 hp through 300 hp: The customer shall provide and install a PG&E-approved combination meter and current-transformer cabinet in accordance with Table 1 on Page 5 and as shown in Figure 12 and Figure 13 on Page 11, or, as an option, the current-transformer cabinet and separate transformer-rated meter safety-socket box as shown in Figure 14 and Figure 15 on Page 11.

    D. Non-residential (agricultural) customer-owned poles are limited to only one meter panel rated less than or equal to 200 amps. Two or more meter panels or a meter panel rated greater than 200 amps must be installed on a panel board construction as shown in Document 065374.

11. Customer's Control Equipment:

    A. Customer's switch and motor control equipment shall be of proper horsepower and voltage rating and, when exposed to weather, shall be weatherproof.

    B. The customer's control equipment shall be selected in accordance with the requirements of NEC Article 430 and local ordinances. Consideration should also be given to installing open-phase and reverse-phase protection.

    C. Customer's switch and motor control cover shall be effectively locked or sealed if the enclosure contains accessible electrically energized parts.

    D. When a service pole without an adjacent panel board is used, the customer's switch and motor control equipment may be installed as shown on Pages 7 and 8. One side of the pole must be kept clear for climbing.

12. Services to Three-Phase Pumps:

    A. When three-phase service is established to a pump, PG&E's crew will assist in checking for satisfactory pump motor performance if the customer or his representative is present. The construction crew should take "Clamp-on" ammeter readings at the service head, or the customer or his representative can take them at the motor control box. If the reading on the "high" phase is more than 10% higher the reading on the "low" phase, then the phases should be rolled to get the readings as close as possible (see Figure 1 below). The set of readings that gives the lowest difference is the connection that should be retained. It is possible that none of the other readings will be any better. Use the "Motor Data Sheet, to record all readings.

    (1) Starting and stopping of the pump should be done only by the customer or his representative. Connections can be changed at the transformer pole or service pole by PG&E's crew or at the motor control box by the customer or his representative.

    (2) On 240 V, 3-wire services where one phase conductor is grounded, all rolling of leads must be done on the customer's motor leads (at the motor control box), not on PG&E's service leads.

    (3) Example

    Once water was flowing satisfactorily from the pump, the following ammeter readings were taken:

Connection	Amperes		
	L1	L2	L3
A = Original Readings	60	61	67
B = Second Set of Readings	60	62	63
C = Third Set of Readings	59	62	66

Conclusion: Connection B should be used.

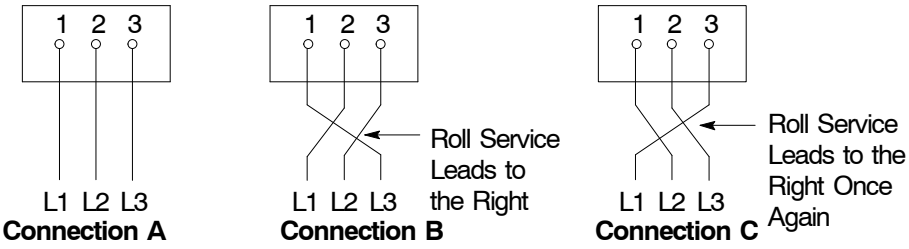

Figure 1
Rolling Leads
(maintains same rotation)

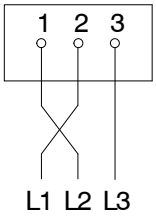

Figure 2
Interchanging Leads
Reverses Rotation
(for information only)

13. Voltage stabilizer will be furnished and installed by PG&E. Voltage stabilizer is required on 480V, 3-phase, 3-wire ungrounded installations. Refer to Document 052497.

References	Location	Document
Dead-End Attachments for Service and Streetlight Drop Cables	ELS	015009
Spool and Clevis-Type Insulators–Distribution Lines	OH: Conductors	022439
Requirements for Customer-Owned Poles	OH: Services/Greenbook	025055
Dead-End and Angle Attachments for Aluminum Conductors - Distribution Lines	OH: Conductors	028851
Voltage Stabilizer for 480 Volt, Three-Phase, 3-Wire Ungrounded Service	OH: Meters/EMWP	052497
Agricultural Underground Service 500 HP or Less	UG-1: Services/Greenbook	054619
Cable and Accessories for Secondary Aerial Cable Construction	OH: Framing	057876
Miscellaneous Hardware for Overhead Line Construction	OH: Framing	058778
Conductors for Overhead Lines	OH: Conductors	059626
Underground Conduits	UG-1: Conduits	062288
Overhead and Underground Panel Board Construction	OH-Services/UG-1: Services	065374
Fired Wedge Connectors for Primary and Secondary Distribution Lines	OH: Conductors	066194

Table 1 Customer's Metering Equipment Requirements [1]

Service Voltage [2]	Maximum hp [3] Single or Grouped Motors	Metering Equipment's Current Rating (Continuous/Max. Amps Shown) [8]	Type Meter Equipment Required	Refer to
120/240 V Single-Phase, Non-Residential, 3-Wire	7-1/2 hp Single Phase	100	Self-Contained 4-Jaw Bussed Safety-Socket Meter Box	Figure 9 Page 10
240 V Delta Three-Phase, 3-Wire [4]	30 hp Single or Grouped	100	Self-Contained 5-Jaw Bussed Safety-Socket Meter Box	Figure 10 Page 10
	60 hp Single or Grouped	200		
240/120 V Delta Three-Phase, 4-Wire [5]	30 hp Single or Grouped	100	Self-Contained 7-Jaw Bused Safety-Socket Meter Box	Figure 11 Page 10
	50 hp Single or Grouped	200		
480 V Delta Three-Phase, 3-Wire [6]	60 hp Single or Grouped	100	Self-Contained 5-Jaw Bussed Safety-Socket Meter Box	Figure 10 Page 10
	125 hp Single or Grouped	200		
	300 hp Single or Grouped	400 [7]	Combination Meter, Current-Transformer and Service Termination Cabinet With 8-Jaw Socket and CT Mounting Base	Figure 12 Page 11
			Separate Current-Transformer Cabinet and Transformer-Rated Meter Box	Figure 14 and Figure 15 Page 11
277/480 V Wye Three-Phase, 4-Wire	60 hp Single or Grouped	100	Self-Contained 7-Jaw Bussed Safety-Socket Meter Box	Figure 11 Page 10
	125 hp Single or Grouped	200		
	300 hp Single or Grouped	400 [7]	Combination Meter, Current-Transformer and Service Termination Cabinet With 13-Jaw Socket and CT Mounting Base	Figure 13 Page 11
			Separate Current-Transformer Cabinet and Transformer-Rated Meter Box	Figure 14 and Figure 15 Page 11

1 For meter equipment illustration, see Pages 10 through 11.
2 See Note 3 on Page 1 for available service voltages.
3 Maximum horsepower for single and grouped motors is based on nameplate rating. Ratings shown are the recommended values for motors running at full load.
4 Limited availability, consult PG&E.
5 See Note 3.C on Page 1.
6 480 V Delta is not available for new services.
7 Customer metering equipment rated higher than 400 amps, three-phase, must be pad-mounted and supplied by an underground service.
8 The metering equipment ratings shown must not be exceeded with motors running at full load. Customer may choose metering equipment with a greater ampacity rating.

Pole Construction

Notes: (For additional information on the requirements for customer-owned poles refer to Document 025055)

1. Omit wood block (see Table 3, Item 1 on Page 7) and conduit covering (see Table 3, Item 5 on Page 7) when PVC service conduit is used. Exception: Wood block is required when service weatherhead is metallic and the neutral service entrance conductor is uninsulated.
2. When the service conduit (see Table 3, Item 6 on Page 7), is metallic or minimum 2-1/2 inch diameter PVC Schedule 80, the enclosure height may be reduced as permitted by G.O. 95 to allow 48 inches minimum meter height from a level standing surface to the center line of the meter.
3. The customer shall extend the service weatherhead to within 18 inches of the pole top unless otherwise instructed by PG&E (see Note 7A on Page 2).
4. For notes and details pertaining to metering equipment, see Note 10 on Page 2.
5. For notes and details pertaining to customer's service disconnect and motor control equipment, see Note 11 on Page 3.
6. For grounding requirements, refer to Note 9 on Page 2.
7. Customer's conductors installed in conduit must be in rigid steel conduit, or 2-1/2 inch minimum diameter Schedule 80 PVC plastic on surface of pole.
8. Alternate location for the ground rod to reduce exposure to agricultural equipment is shown in Figure 3 on Page 7.

Table 2 Customer's Service Attachment Location [1, 2]

Metering Equipment's Current Rating (Continuous/Max. Amps Shown) [4]	Minimum Distance From Top of Pole (inches)	Service Attachment Type
< = 200	16	Weatherhead
400 (1 ∅) [3]	32	3 Spool Extended Rack
400 (3 ∅) [3]	40	4 Spool Extended rack

1 All open wire services require extended rack construction. See Figure 7, Page 8.
2 A longer pole may be necessary to obtain the required service clearances from the ground. See Document 025055 Requirements for customer-owned poles.
3 See note 10.D on page 2.
4 The metering equipment ratings shown must not be exceeded with motors running at full load. Customer may choose metering equipment with a greater ampacity rating for their metering equipment.

Pole Construction (continued)

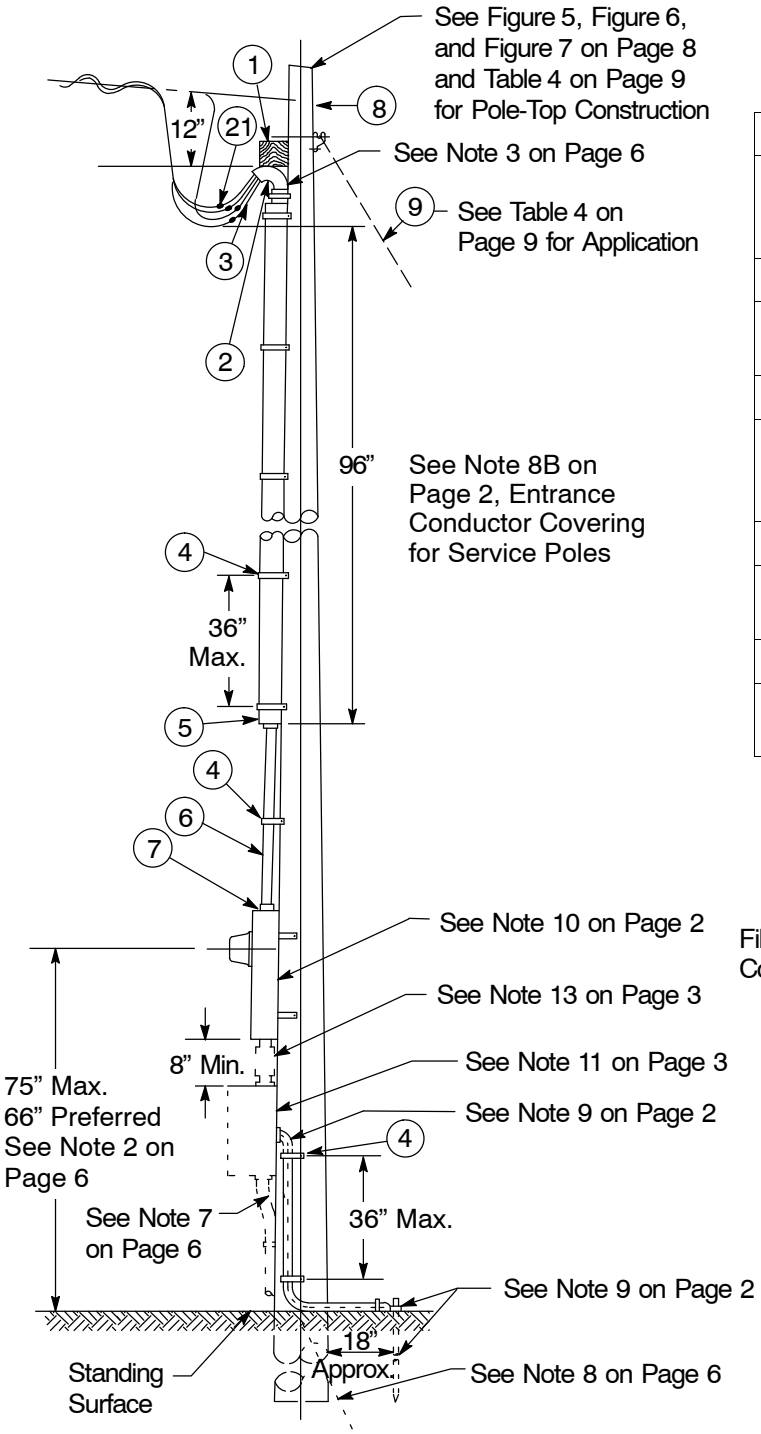

Figure 3
Pole Construction for Agricultural Overhead Service 300 hp or Less

Table 3 Material to be Furnished and Installed by Customer

Item	Description
1	Wood Block 4” x 4” x 6” Long Securely Nailed to Pole (may be two 2” x 4” x 6” wood blocks nailed together) (see Note 1 on Page 6)
2	Conduit Entrance Cap or Service Weatherhead
3	Service Entrance Conductors (see Note 7A on Page 2)
4	Pipe Strap, Heavy Duty, Galvanized
5	Covering, Wood, Fiber Conduit or PVC “U”-Shaped Moulding (see Note 8B on Page 2 and Note 1 on Page 6)
6	Service Conduit (see Note 7 on Page 2)
7	Meter Socket or Current-Transformer Enclosure (see Pages 10 through 11)
8	Wood Pole, as Required (25 ft. minimum)
9	Guy Material, as Required. (See footnotes for Table 4 on Page 9)

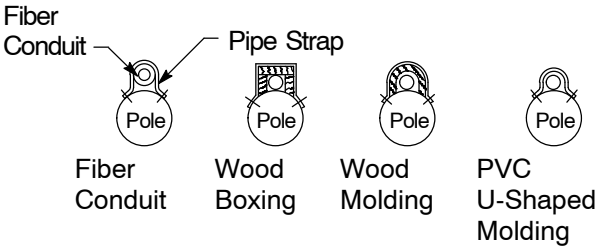

Figure 4
Methods Of Covering Metallic Conduits (see Note 8B on Page 2)

Pole-Top Construction

Notes

1. See Table 4 on Page 9 for down guy requirements.
2. When a neutral conductor is required inside the molding, replace the bare neutral with the required length of insulated conductor.
3. For customer-owned poles, span lengths are limited to 150'. The vertical separation between conductors in extended rack construction is 8" minimum.
4. Figure 6, Page 8 installation is not allowed for new construction.

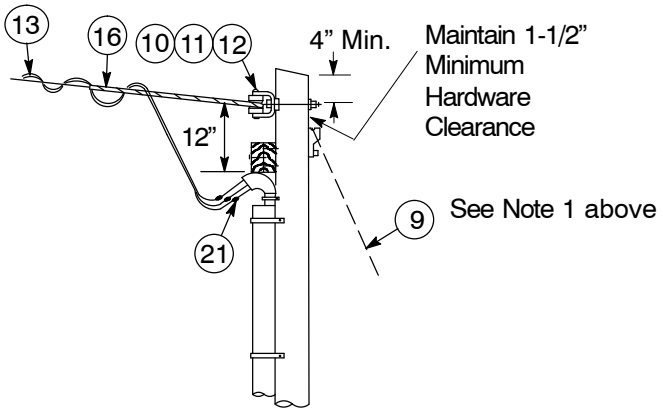

Figure 5
Service Drop Cable Installation

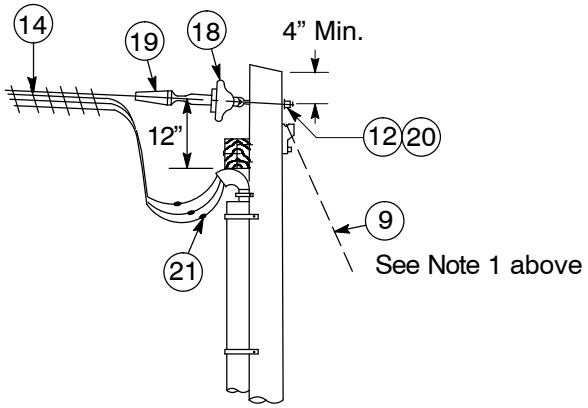

Figure 6
Aerial Cable Installation
See Note 4 above

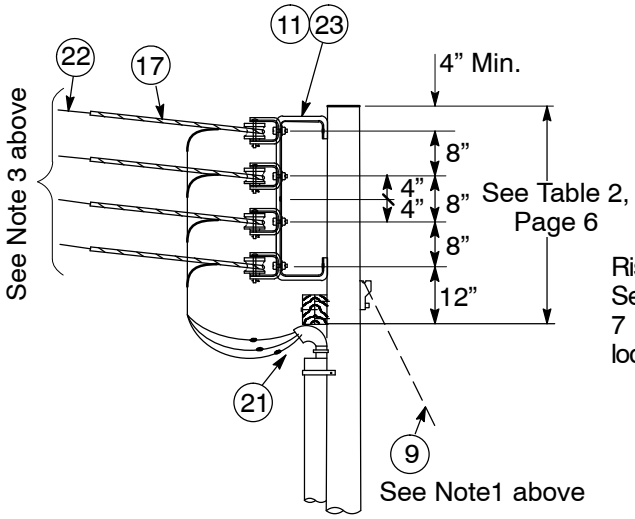

Figure 7
Open Wire Cable Installation

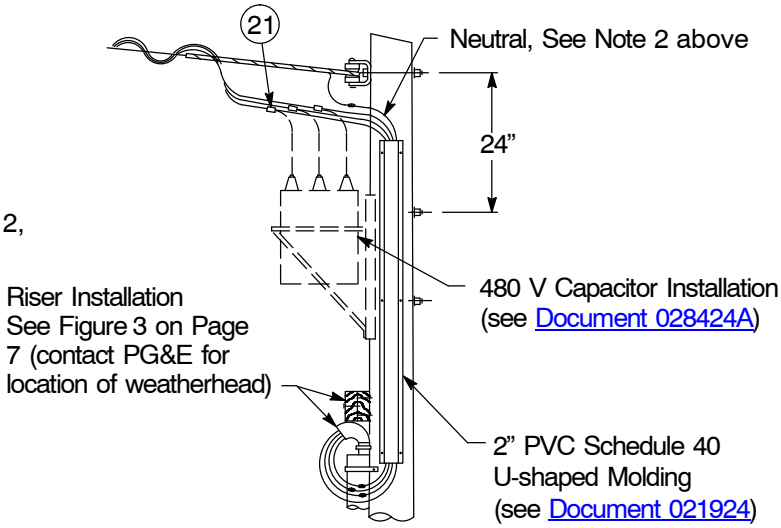

Figure 8
Pole-Top Construction for Installation of 480 V Capacitor Bank or Other PG&E Equipment

Pole-Top Construction (continued)

Table 4 Conductor Application for Customer-Owned Service Poles

Cable Data [1]			Construction	
Metering Equipment's Current Rating (Continuous/Max. Amps shown)	Span [4] (feet)	Slack Span [3]	Down Guy Requirement	Pole-Top Construction
< = 200	10-150	1/0 Service Drop	[2]	Figure 5 Page 8
	10-80	4/0 Service Drop	[2]	Figure 5 Page 8
Above 200 to 400	10-80	4/0 Service Drop	[2]	Figure 5 Page 8
	10-80	397.5 WP Al Open Wire	[2]	Figure 7 Page 8

1 Larger cable may be required if voltage drop requirements are not met.
2 A down guy is required if construction crosses the street or thoroughfare, or if the pole is not in reasonably firm soil.
3 Full Tension Span are allowed for existing installations and like for like replacements, but not new construction.
4 Span length limitations are based on light loading districts. See Document 059690 for service drop limitations in other loading districs.

Table 5 Material to be Furnished and Installed by PG&E

Item	Description	Document
10	Insulator, Spool and Clevis-Type	022439
11	Bolt, Machine, 5/8" x Length (as required)	058778
12	Washer, 2-1/4", Square, 5/8" Bolt Size	
13	Cable, Service Drop, 1/0 or 4/0 (as required)	059626
14	Cable, Aerial, 1/0 or 4/0 (as required)	057876
15	Watt-Hour Meter, Current Transformer, Test Block, Test Switch (see Note 9 on Page 2)	–
16	Preformed Grip, Service Cable	028851
17	Preformed Grip, WP Aluminum	028851
18	Insulator, Suspension, Clevis-Type	057876
19	Dead End, Automatic, Clevis-Type	
20	Eyebolt, 5/8" Diameter x Length (as required)	058778
21	Connector, Fired Wedge (size as required)	066194
22	Cable, 397.5 kcmil WP Aluminum (as required)	059626
23	Extended Rack	015187

Safety-Socket Meter Box

Notes

1. Refer to PG&E's *Electric and Gas Service Requirements* book for dimension and specification details.
2. Figure 10 and 11 are applicable to maximum of 125 hp pump (self-contained) at 480 V or 277/480 V.
3. 240 V, three-phase, 3-wire service is limited and available only when PG&E's transformers are of the overhead type, the load is limited to three-phase motors (small 240 V, single-phase loads may be permissible in some locations), and in the future, other customers are not likely to be served from the transformer bank.
4. Figure 9 below shows a meter socket with test bypass facilities used for non-residential single-phase service, 120/240 V maximum of 7-1/2 hp. All three-phase services require bypass facilities.
5. Voltage stabilizer, required on 480 V, 3-phase, 3- wire ungrounded services, will be furnished and installed by PG&E. Refer to Document 052497.

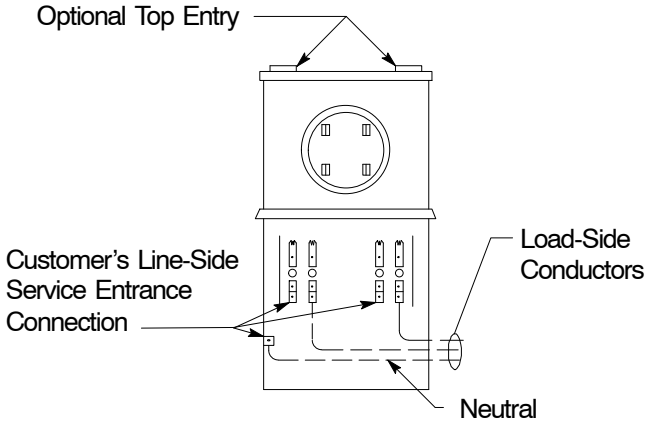

Figure 9
120/240-V, Single-Phase, Self-Contained, 4-Jaw Bused 0–200 Amp Safety-Socket Meter Box
See Note 4 above

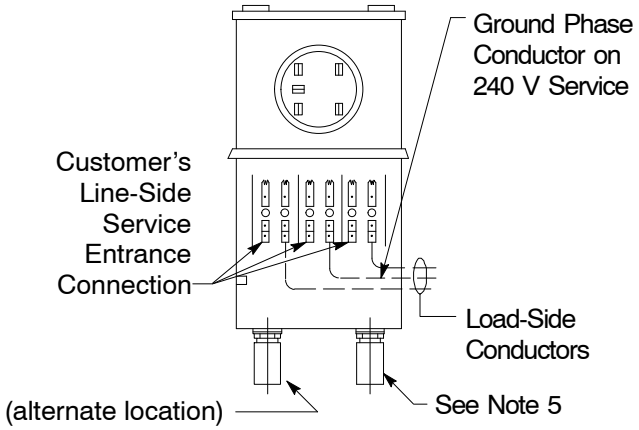

Figure 10
240-V and 480-V, Three-Phase, 3-Wire, Self-Contained, 5-Jaw Bused 0–200 Amp Safety-Socket Meter Box
See Note 3 above and Footnote 6 on Page 5

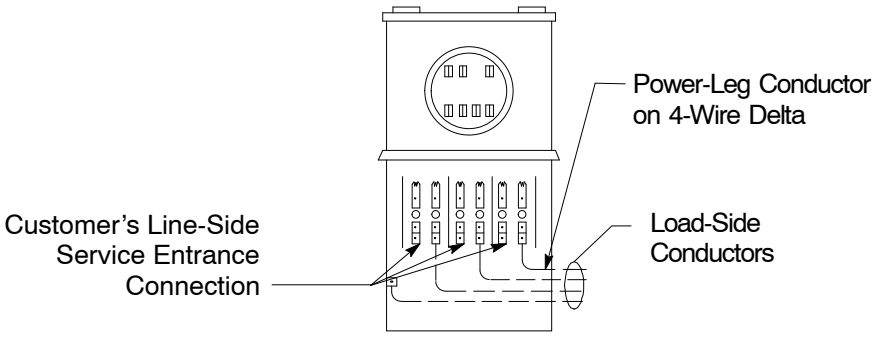

Figure 11
240/120-V, Three-Phase 4-Wire Delta or 480/277-V, Three-Phase, 4-Wire Wye Self-Contained 7-Jaw Bused 0-200 Amp Safety-Socket Meter Box
See Note 2 above

Transformer-Rated Metering and Enclosure

Notes

1. Refer to PG&E's *Electric and Gas Service Requirements* book for dimension and specification details.
2. Figures 12 through 15 are applicable to a maximum of 300 hp motors.
3. Figures 12 through 15 are applicable to wall-mounted service termination enclosures with maximum ratings of 400 amps, three-phase. Termination equipment that require ratings higher than 400 amps must be pad-mounted and supplied by an underground service.

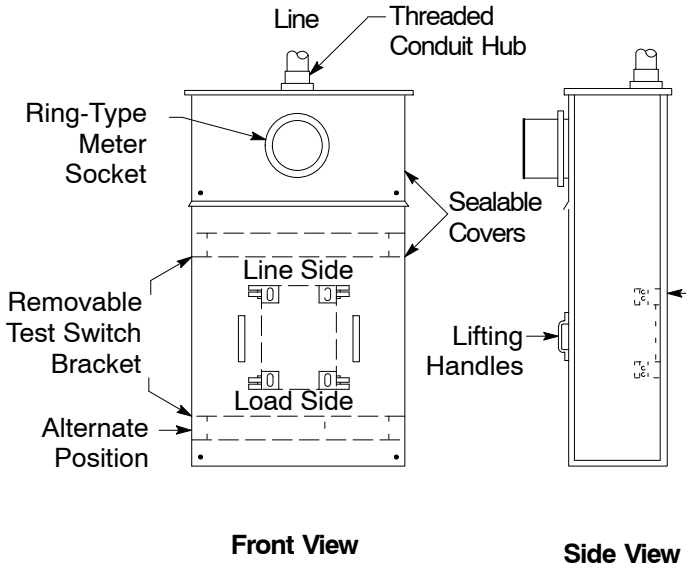

Figure 12
Combination Meter and Current-Transformer Cabinets
0-400 Amp Rating
For 480 V, 3∅, 3-Wire
(See Table 1, Footnote 6 on Page 5)

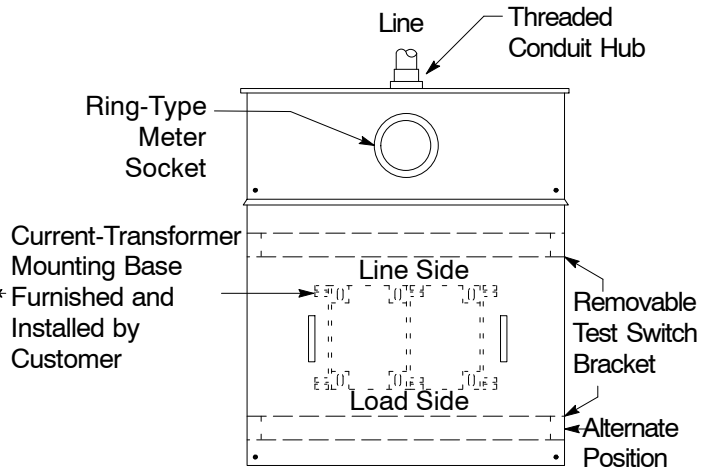

Figure 13
Combination Meter and Current-Transformer Cabinets
0-400 Amp Rating
For 277/480 V, 3∅, 4-Wire Wye
(See Table 1, Footnote 6 on Page 5)

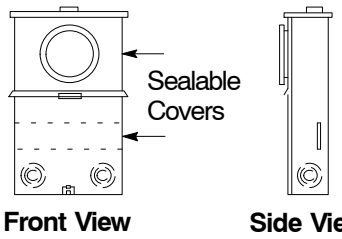

Figure 14
Meter Box for Transformer-Rated Metering

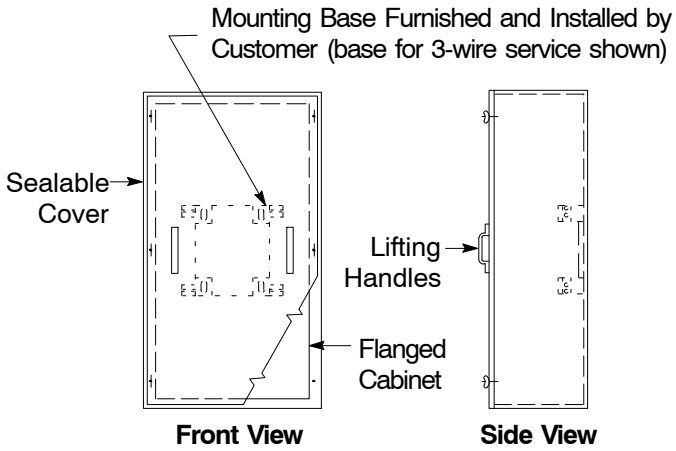

Figure 15
Current-Transformer Cabinet
0-400 Amp Rating

Revision Notes

Revision 13 has the following changes:

1. Modified Note 3 on Page 1.
2. Modified Note 9 and Deleted Note 10.E on Page 2.
3. Added Footnote 5 in Table 1 on Page 5.
4. Corrected Title typo for reference document 054619.

Prepared by: ABB1

TERMINATING UNDERGROUND ELECTRIC SERVICES 0–600 VOLTS IN CUSTOMER-OWNED FACILITIES

058817

Asset Type:	Electric Distribution	**Function:**	Design and Construction
Issued by:	Alexander P. Yan (APY1)	**Date:**	06-29-12

Rev. #07: This document replaces PG&E Document 058817, Rev. #06. For a description of the changes, see Page 10.

This document is also included in the following manual:

- *Electric and Gas Service Requirements (Greenbook)*

Purpose and Scope

This document shows methods and requirements for terminating PG&E-owned underground service conductors in customer-owned service terminating facilities.

General Information

1. Underground service conductors will normally be run in a joint trench with gas and communications service facilities. Where possible, a single service trench will be used to serve two adjacent premises. In order that the most satisfactory meter location may be determined, PG&E should be consulted while the building is in the planning stage.
2. Residential Service Termination Enclosures

   The customer may provide any of the following as a service termination enclosure for residential service.

   A. Single Family

   (1) Combination service pull termination and meter socket, 0 through 200 amp (see Figure 1 on Page 3), or 201 through 320 amp (see Figure 2 on Page 4).

   (2) Combination service pull section, meter, and CT mounting enclosure, 201 through 400 amp, for single-phase service (see Figure 6 on Page 7).

   (3) Wall-mounted underground service pull and termination box, 401 through 600 amp, single-phase (see Figure 7 on Page 7).

   (4) Floor-standing underground service pull and termination box, 601 and above, single-phase, 401 and above, three-phase (see Figure 10 on Page 9).

   (5) Meter post, for a typical underground service to a mobile home, 0 through 200 amp (see Document 052521).

   B. Multi-Family

   (1) Wall-mounted underground service pull section and termination box for service 0 through 600 amp (see Figure 9 on Page 8), or combination service termination enclosure and meter socket panel, 0 through 600 amp (see Figure 8 on Page 8).

   (2) Underground service pull and termination section of a floor-standing switchboard (see Document 063929 to determine when bus duct termination equipment is required).
3. Non-Residential Service Termination Enclosures

   The customer may provide any of the following as a service termination enclosure for non-residential service.

   A. Single Customer

   (1) Typical safety socket meter panel, 0 through 200 amp (see Figure 3 on Page 5).

   (2) Combination service pull, meter, and CT mounting enclosure, 201 through 400 amp, for single or three-phase service (see Figure 5 on Page 6).

   (3) Underground service pull and termination box (see Figure 10 on Page 9).

   (4) Underground service pull and termination section of a floor-standing switchboard (see Document 063929 to determine when bus duct termination equipment is required).

B. Multiple Customers

(1) Underground service pull and termination box (see Figure 10 on Page 9).

(2) Underground service pull and termination section of a floor-standing switchboard.

4. Service Termination, Bus Stubs, and Connectors

Termination bus stubs and connectors shall be furnished and installed in the termination enclosure as follows.

A. Enclosures Rated 0 – 200 Amps

(1) The customer shall provide approved range-taking connectors suitable for aluminum conductors.

(2) One-bolt bus attachment connectors are acceptable for 0 – 200 amp services provided they are anchored to prevent twisting of the connector assembly.

B. Enclosures Rated 201 Amps and Larger

(1) Aluminum termination bus stubs with NEMA standard mounting bolts (see Paragraphs 4B(3) and 4B(4)) shall be provided for the connection of service lateral conductors in customer's service equipment where the main disconnect (or service equipment rating, if there is no main disconnect) is rated more than 200 amps. PG&E will furnish and install the termination connectors.

(2) The standard provisions for terminating either phase or neutral conductors shall consist of one pair of 1/2-inch bolts on 1-3/4 inch vertical centers for equipment rated 201 – 400 amp panels. An additional pair of 1/2-inch bolts (on 1-3/4 inch vertical centers) shall be provided on 2-inch horizontal center for each additional 400 amp increments, or multiples thereof, of service capacity up to 2,500-amp panels (e.g., 1 pair for 400 amps, 2 pairs for 600 and 800 amps, 3 pairs for 1,000 and 1,200 amps, etc.) See Figure 4 on Page 5.

(3) Cable termination mounting bolts shall be 1/2-inch cadmium-plated steel or equivalent and shall extend a minimum of 2 inches from the mounting surface. They shall be supplied with nuts, flat washers, and a pressure maintaining spring washer and shall be secured in place in such a manner that a termination connector can be positioned and connected with the washers and nuts, using one tool only from the front. Bolts shall have a head behind the termination pad and be of a recognized captive or swedge restrainer design.

(4) A radial clearance of 1-1/2 inch is required between any termination facility (including bolts) and any other termination facility, bus, or grounded surface in the terminal mounting area except (1) the minimum clearance to the back of the pull section or to the front pull section cover may be 1 inch and (2) the neutral termination facility may have a minimum clearance of 1 inch from any grounded surface.

5. Metering Requirements

A. Meters will be furnished by PG&E.

B. When a multi-unit residential meter panel services either a three-phase or a larger than 200-amp single-phase house (utility) load, it shall be equipped with approved test-bypass facilities (see Figure 9 on Page 8).

References	Location	Document
Electrical Service Requirements for Mobile Home Developments	UG-1: Services/Greenbook	052521
Electric Revenue Meters	OH: Meters	062208
Methods and Requirements for Installing Residential Underground Electric Services 0 - 600 V to Customer-Owned Facilities	UG-1: Services/Greenbook	063927
Methods and Requirements for Installing Commercial Underground Electric Services 0-600 Volts to Customer-Owned Facilities	UG-1: Services/Greenbook	063928
Requirements for Bus Duct Entrance Termination Unit for Use With Pad-Mounted Transformers	UG-1: Services/Greenbook	063929
Engineering Material Specification 99, "Underground Electric Duct System (installed by applicant)"	TIL	EMS99
EUSERC Manual	TIL	

Terminating Underground Electric Services
0–600 Volts in Customer-Owned Facilities

Residential Services

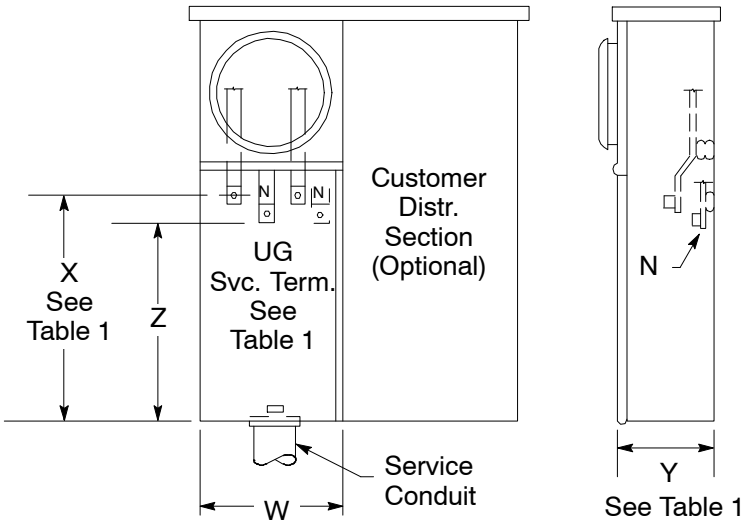

Figure 1
Typical UG Service Termination Enclosure
Combination Meter Socket Panel
(residential 0 – 225 amp)

Table 1 Capacity and Dimensions (see Figure 1 above)

Maximum Capacity	W	X	Y	Z
	Minimum Dimension (Inches)			
125 Amp	7	8	4	6
225 Amp	7	11	5-1/2	8-1/2

Residential Services (continued)

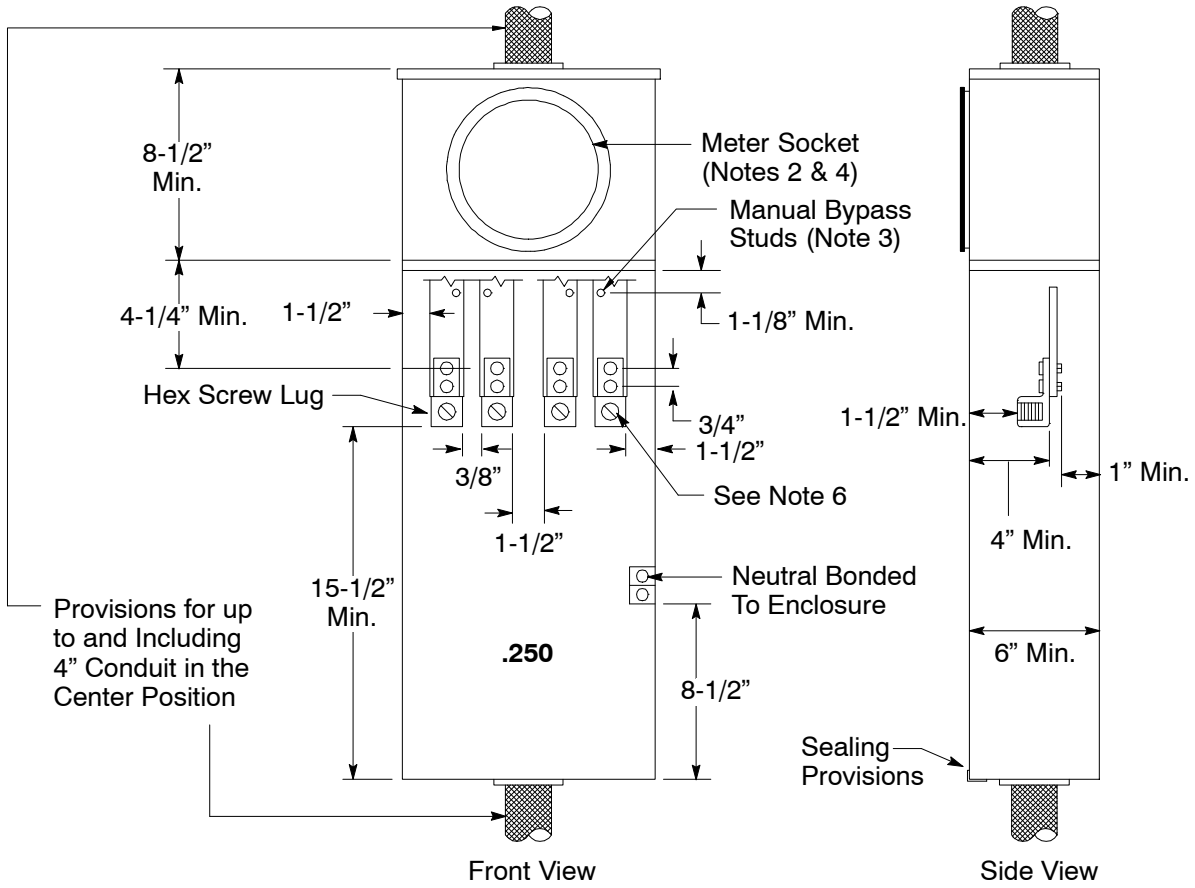

Figure 2
Typical Service Termination Enclosure
Combination Meter Socket Panel for Class 320 Meter
(residential 120/240 V, 201 – 320 amp service)

Notes

1. This service equipment shall be marked with continuous amp rating of 320 amps. Alternatively, it may be marked "400 amp" (320 amps continuous).
2. Ring-type socket only is acceptable per EUSERC Drawing 300.
3. 12-24 bypass studs, 1/2 inches in height with 1/2-inch hex nut (measured across the flat) shall be provided on each phase bus section. The studs shall have a horizontal spacing of 1-1/2 inch (measured from centers) between the line and load bus sections and shall be offset from the line side termination lugs to permit cable entry from the top without interference with the utility-provided manual bypass links.
4. The socket meter panel shall be provided with a sealing ring and shall not be removable with meter in place.
5. The bypass/cable termination compartment cover panel shall be independent of the meter panel, and removable with the meter in place.
6. Terminations for service conductors shall be aluminum-bodied mechanical lugs with a range-taking ability of #1 AWG through 600 kcmil. The lugs shall be secured to assure vertical alignment and line side lugs shall be offset from the face of the bus to permit cable entry from the top. The line and load positions shall be identified in 3/4" high block letters.

Non-Residential Services

Note

1. PG&E will furnish connectors and terminate its service conductors to the line terminals of the current transformer mounting base.

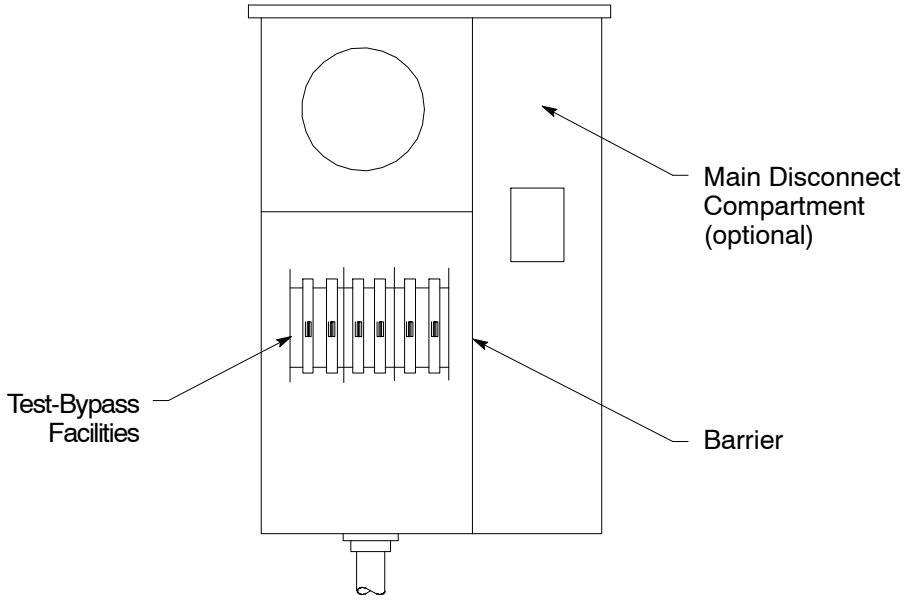

Figure 3
Typical Service Termination Enclosure
Combination Meter Socket Panel
Non-Residential

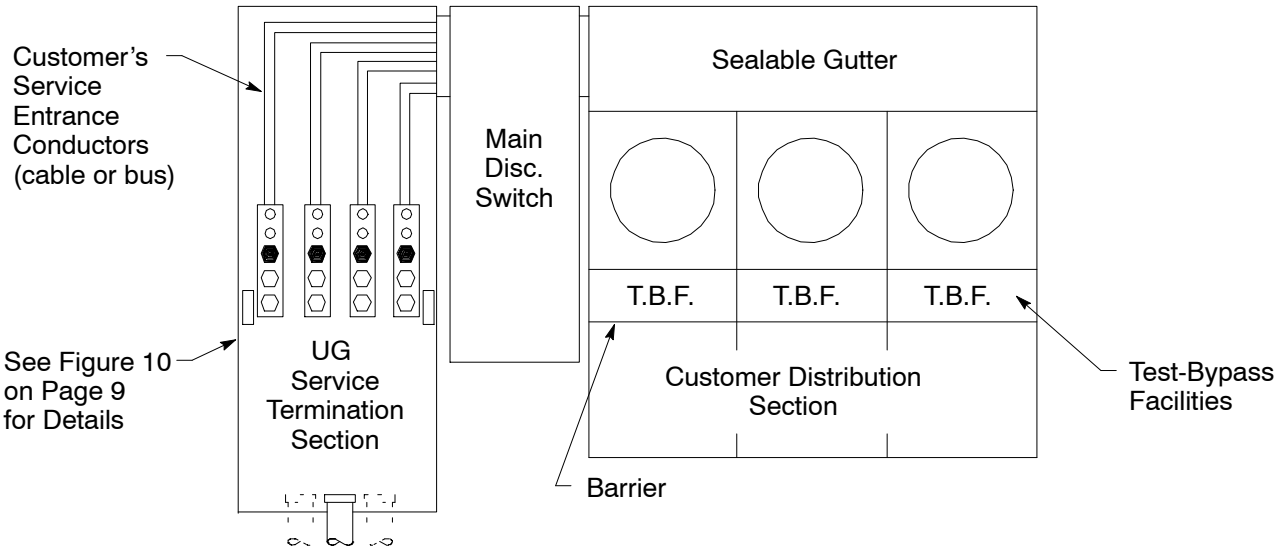

Figure 4
Typical Service Termination Enclosure
Main Disconnect, Meter Socket Assembly
for Multi-Unit Non-Residential Use

Non-Residential Services (continued)

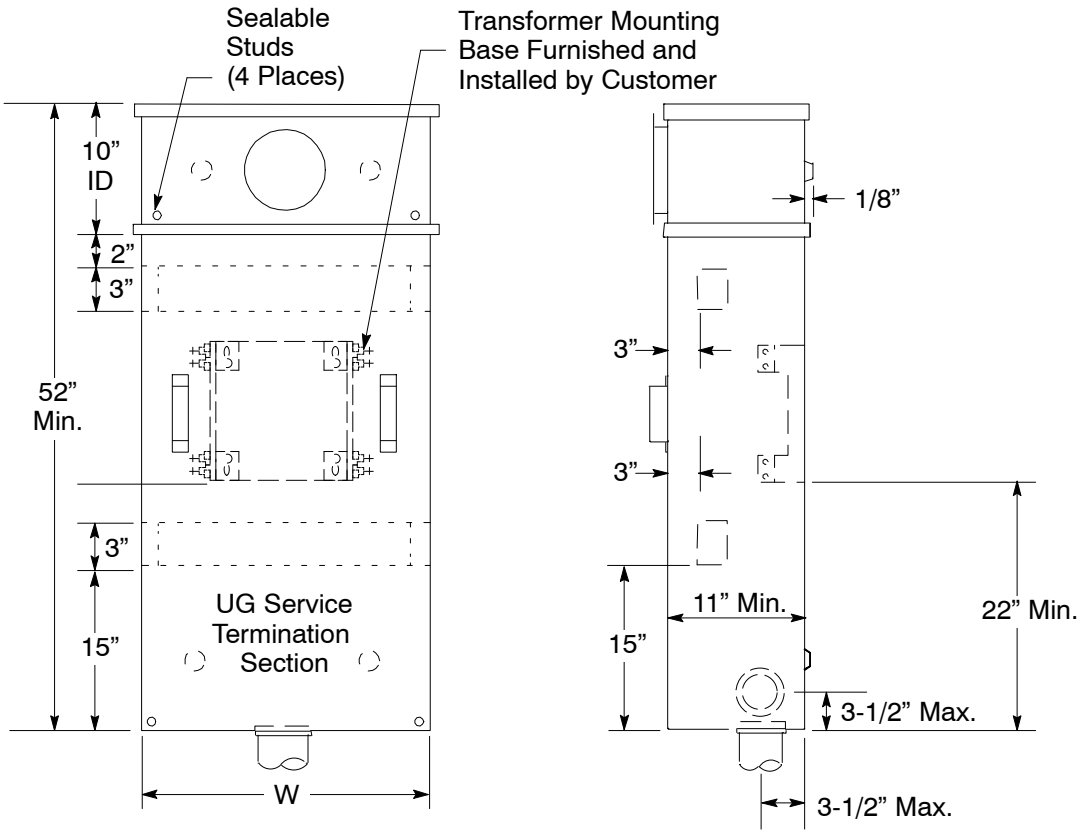

Figure 5
Combination Meter and Current Transformer Cabinet Single-Phase or Three-Phase Service 201 to 400 Amp
(see Note 1 on Page 5)

Table 2 Minimum Box Dimensions

W Minimum (Inches)	
3Ø 4-Wire Y or Δ	1Ø or 3Ø 3-Wire
36	24

Single-Family Residential Service (201 – 600 amps)

Note

1. Remote metering only, with prior PG&E approval.

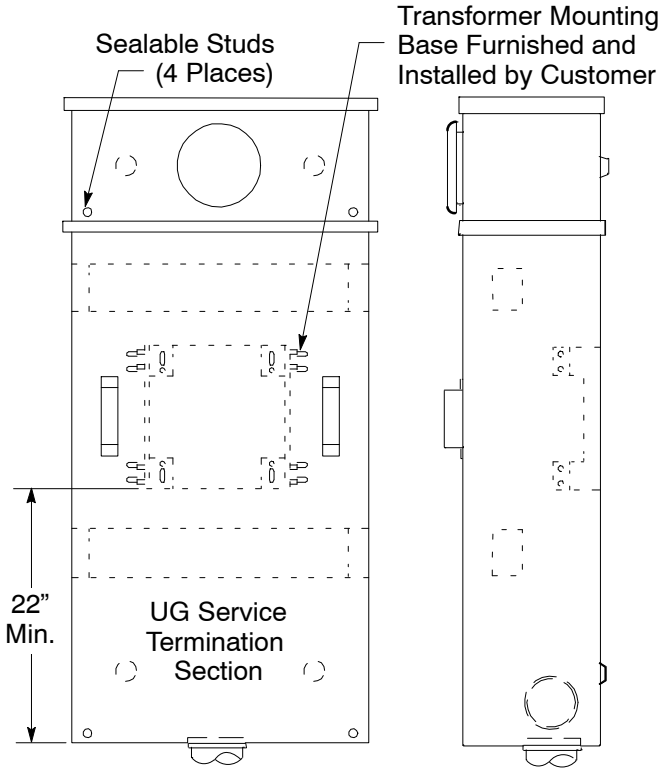

Figure 6
Combination Meter, Current Transformer, and UG Service Termination Cabinet (single-phase service 120/240 V, 201 to 400 amp)

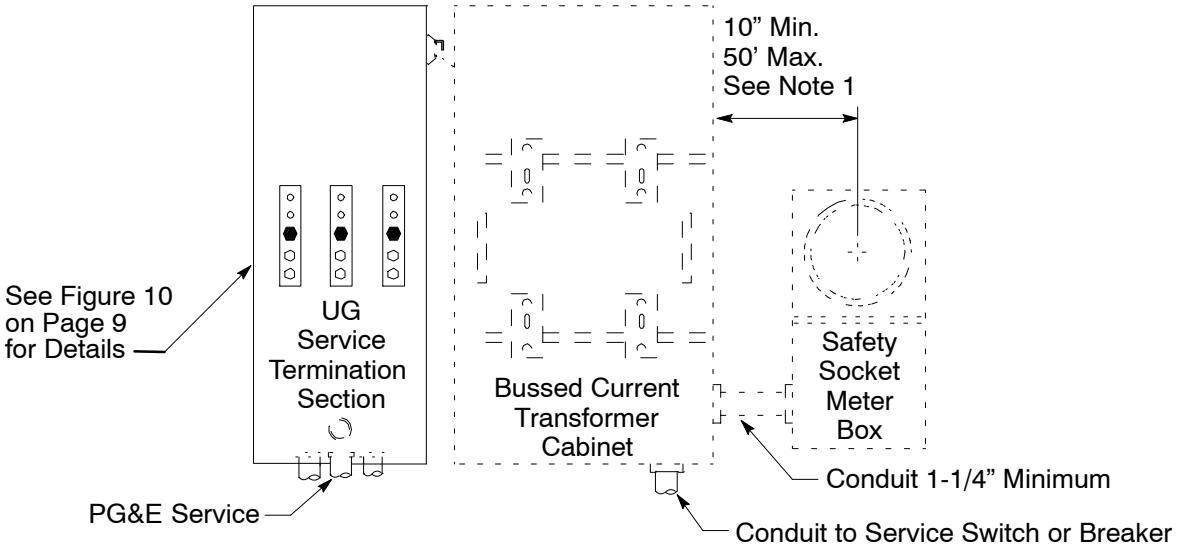

Figure 7
Typical Underground Separate Bussed Current Transformer Cabinet and Safety Socket Meter Box Assembly, 120/240 V, 401 to 600 Amp Service

Residential Multi-Unit Service

Note

1. When a multi-unit residential meter socket panel will have either a three-phase, or a larger than 200-amp single-phase house (utility) meter, the socket for this meter shall be equipped with test-bypass facilities (see Figure 9).

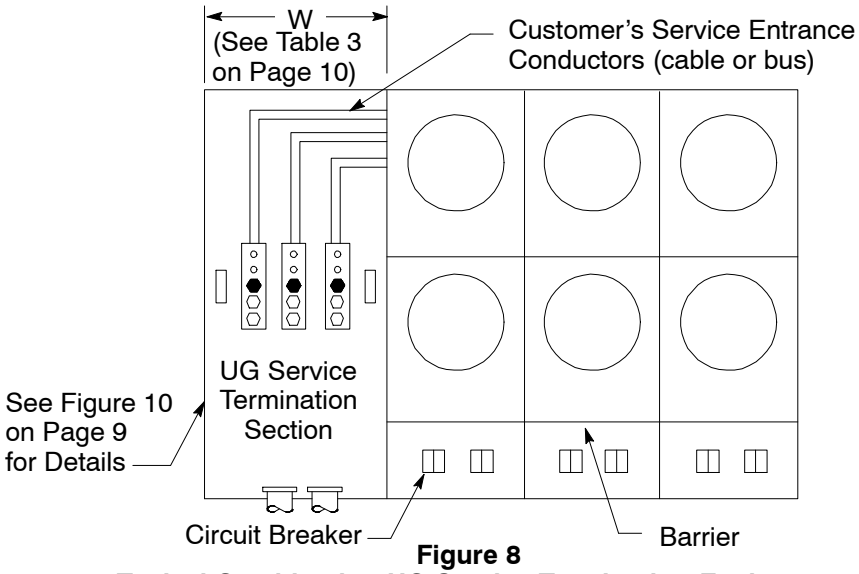

Figure 8
Typical Combination UG Service Termination Enclosure
Meter Socket Panels for Multi-Residential Use (2 to 6 units) 0 – 600 Amp

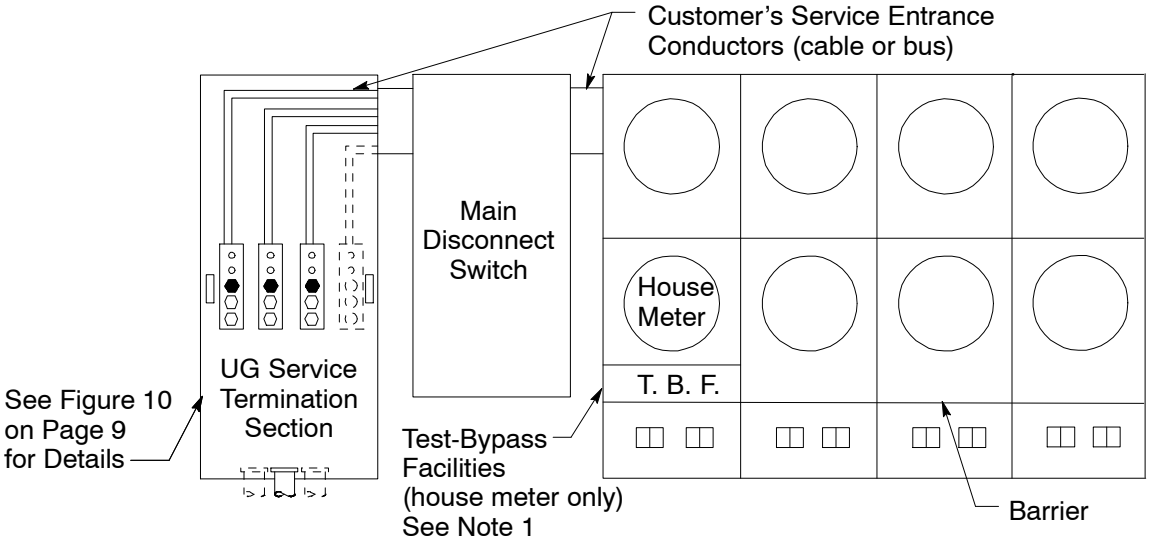

Figure 9
Typical UG Service Termination Enclosure, Main Disconnect, and
Multi-Unit Metering Assembly Residential Use 0 – 1200 Amp

Underground Service Termination Pull Box

Notes

1. Pull box covers shall be removable, sealable, provided with two lifting handles, and limited to a maximum size of 9 square feet. Sealing provisions shall consist of two drilled stud and wingnut assemblies on opposite sides of the panel. All security screws shall be captive.
2. Clear working space shall be maintained. When return flanges are necessary, they shall not intrude into service conductor space designated by shaded area.
3. The 6” minimum height requirement from grade to panel does not apply for floor-standing switchboard.
4. Main service switch rated 2,501 amps and above shall require bus duct configuration.

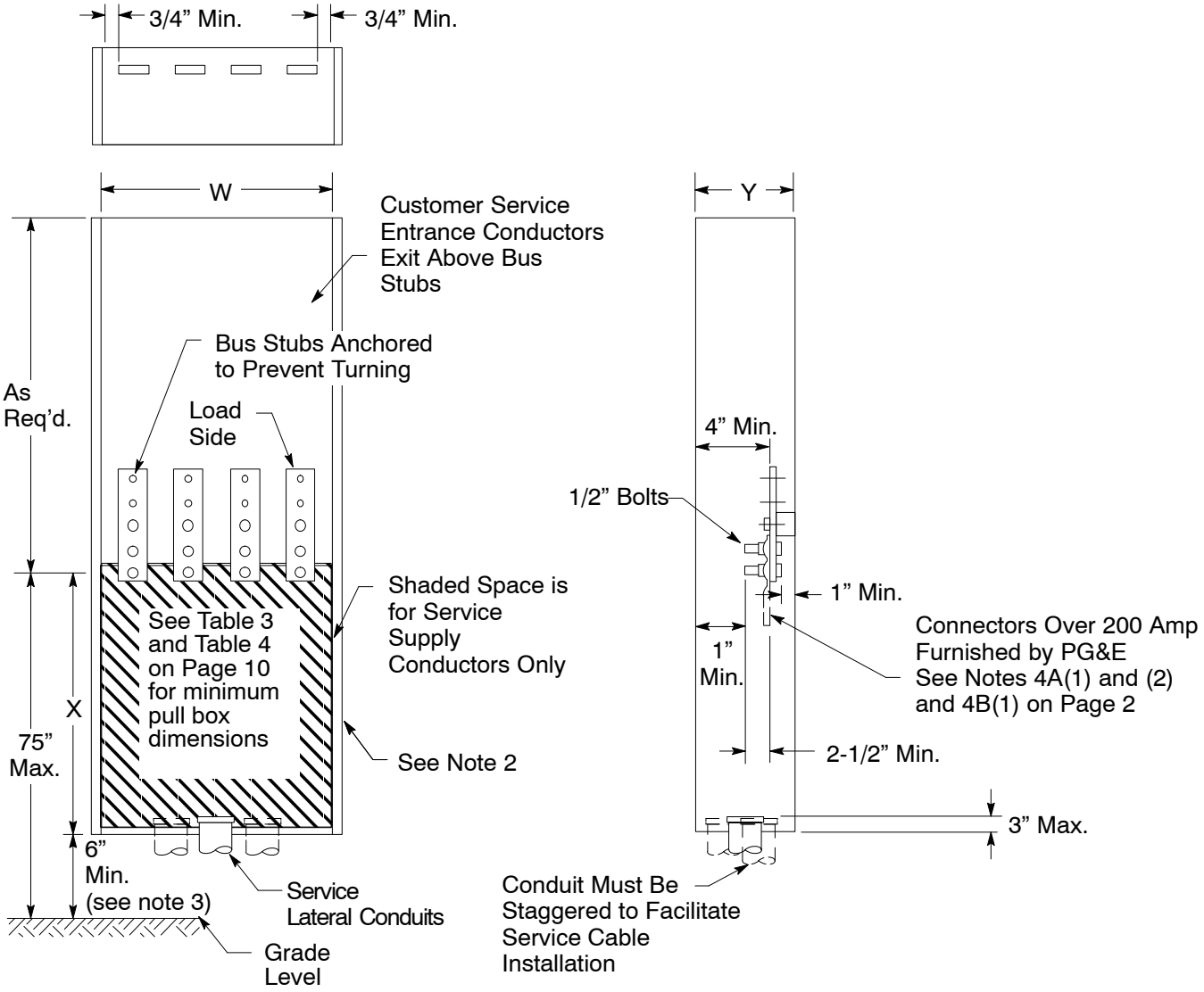

Figure 10
Typical Underground Service Termination Pull Box
(wall-mounted or floor-standing)

Underground Service Termination Pull Box (continued)

Table 3 Minimum, Wall-Mounted, Pull-Box Dimensions: 80% Rated Service, Residential, Single-Phase and 100% Rated Service, Commercial/Industrial, Single-Phase [1] or Three-Phase [2]

Service Rating (Amperes)	Minimum Access Opening "W"		X		Y	
	3-Wire	4-Wire	Bottom Entry	Side/Rear Entry	Bottom Entry	Rear Entry
	All Measurements in Inches					
0–200	10-1/2	14	11	36	6	15
201–400	10-1/2	14	22	42	6	24
401–600 [3]	16-1/2	–	26	48	11	24
Over 600	See Table 4 below for Over 600-Ampere, Single-Phase Services Rated at 100%.					

1 See "Notes" for Table 3 below.
2 Maximum of 400 amperes.
3 For single-phase only.

Table 4 Minimum Switchboard (floor-standing) Pull-Section Dimensions: Over 600 Amperes, Single-Phase Service, 100% Rated and Commercial/Industrial, Three-Phase Service

Service Rating (Amperes)	Minimum Access Opening "W"		Termination Height "X"
	3-Wire	4-Wire	
	All Measurements in Inches		
321–400	24	24	42 Min.–72 Max.
401–800	24	24	
801–1,200	24	30	
1,201–2,000	30	35	
2,001–2,500	—	42	60 Min.–72 Max.

Notes in reference to Figure 10 on Page 9, to Table 3 above, and to Table 4 above.

1. If termination bus-landing stubs are installed perpendicular to the back of the board, a wider enclosure dimension will be required to accommodate the installation of PG&E's cables.
2. Maintain a clear working space. When return flanges are necessary, ensure they do not intrude into service-conductor space.
3. Dimension W is the minimum width of the pull section access opening.

Revision Notes

Revision 07 has the following changes:

1. Revised Table 3.

Prepared by: SXZO

DISCONNECT SWITCH REQUIREMENTS FOR DISTRIBUTED GENERATION CUSTOMERS

060559

Department: Electric Distribution **Section:** Design and Construction

Approved by: D.Jantz (DWJ7) **Date:** 07–01–16

Rev. #03: This document replaces PG&E Document 060559, Rev. #02. For a description of the changes, see Page 6.

Note: This document also is included in PG&E's Distribution Interconnection Handbook.

Purpose and Scope

This document describes the requirements for low-voltage (0–600 V), isolating, disconnect switches on customer generation systems interconnected to a PG&E overhead or underground service. This document also describes PG&E's minimum functional and location requirements for switches. A disconnect switch device provides a visible open clearance point when it is necessary to isolate the customer's generator from the PG&E system.

General Information

1. Provide a disconnect device to electrically isolate the customer's generator from the PG&E system in order to establish a clearance point for maintenance and repair work in accordance with PG&E safety rules and practices. The isolating disconnect device does not have to be rated for load break and therefore must **not** be used to make or break parallels between the PG&E system and the generator(s).
2. Only use alternating current (ac) disconnect switches specifically approved by PG&E for this purpose. PG&E employees must inspect and approve the installation before operation of the customer's generation system will be permitted.
3. The disconnect device must be installed between the PG&E meter and all generation sources.
4. The device must be physically located for ease of access and visible to PG&E employees preferably within 10 feet of the meter. The device must be normally located in close proximity, or within line of sight, of the meter.
5. General or light duty disconnect switches typically are installed when the voltage is 240 V or less and the ampere rating 600 amps or less. Use heavy-duty disconnect switches for all applications above 240 V and 600 amps.
6. The ampacity rating of a disconnect switch must be equal to or greater than the ampere rating of the generator.
7. The neutral conductor shall not be switched.
8. Three–pole switches may be used in single–phase applications.
9. Disconnect switches with an interlock are allowed provided they meet all of the functional requirements. An interlock system allows the switch to be opened (off) by the producer, but cannot be closed (on) until reset by PG&E.
10. All disconnect devices must have locking provisions that accept a PG&E padlock with a 5/16-inch lock shaft. Keyed locks are not allowed. If the disconnect device is operable without opening the enclosure, the operating handle must be lockable. If the enclosure must be opened to operate the disconnect device, the enclosure must be lockable.
11. Molded case circuit breakers, pull-out type disconnects, or any other similar device are not acceptable as an approved disconnect switch.
12. For applications not described, contact the PG&E Electric Generation Interconnection (EGI) department.
13. Interconnections in any PG&E sealable compartment are **NOT** allowed without written authorization from the Electric Meter Engineering or Electric Distribution Standards departments. For any questions, contact PG&E's EGI department.

Disconnect Switch Requirements for Distributed Generation Customers

Disconnect Switch Requirements

Basic

As specified and in *Electric Rule 21*, “Generating Facility Interconnections,” the generating facility must have an ac disconnect switch. The device must meet all of the PG&E requirements, as specified in this document.

All disconnect switches must conform to nationally recognized standards and meet all applicable certification requirements. These include, but are not limited to: NFPA 70–National Electrical Code (NEC), California Electrical Code (CEC), Underwriters Laboratories (UL), or other Nationally Recognized Testing Laboratory (NRTL).

PG&E-approved disconnect switch models currently listed in *both the Eaton and Siemens Safety Switch Cross-Reference Guides,* meet all of the functional requirements described below. These guides can be found on PG&E’s Distribution Interconnection Handbook website at http://www.pge.com/dih/.

Functional

- Manually operated: Operated by a person and not operated electronically.
- Gang-operated: One switch handle opens and closes all phases simultaneously.
- Includes marking or signage on the switch that clearly indicates the open (off) and closed (on) positions.
- Lockable in the open (off) position using a PG&E padlock.
- Allows visible verification that an air-gap of separation has occurred between the blades and contact points.
- A fusible ac disconnect switch is required for generators that do not have over-current protection (i.e., breakers, fuses) at the point of interconnection with the utility.
- Adequately sized to handle fault and overcurrent conditions.

Location

- Easily accessible by PG&E, when requested.
- Located 10 feet or less from PG&E’s electric meter at the point of common coupling or interconnection and is seen easily from the meter panel.
- Installed at a vertical height of between 48 inches (minimum) and 75 inches (maximum) from the ground to the top of the switch, as measured from the pivot point where the switch handle is attached.
- Clearly marked on the submitted single-line diagram indicating the manufacturer, model type, voltage rating, current rating, and location.
- If the device is not adjacent to the PG&E’s electric revenue meter(s), a clear map and signs indicating of the location of the disconnect switch are required. If the disconnect switch is not accessible outside the locked premises, include signs with contact information and a distribution provider-approved locking device for the premises.
- Wall-mounted or floor standing (pad-mounted).

Disconnect Switch Requirements for Distributed Generation Customers

Exemption to the Disconnect Switch installation Requirement

Applicants with inverter-based generating systems that are supplied by PG&E single phase services up to 240 volts may be exempted from installing a disconnect switch, as determined by PG&E, if the meter panel that is interconnected with the generation source(s) meets **all** of the following conditions:

- Self-contained (not transformer-rated).
- Accepts socket-based meters (not bolt-on meters).
- Rated for 320 amps or less of “continuous” current.
- Single-phase, 120/240 volt or 120/208 volt.

Any generation system that does not meet these conditions must install a disconnect switch, as required by PG&E.

Definitions:

Back Feed: The energizing of a utility’s distribution system from a non-utility generation source.

Disconnect Switch: A disconnect device that the customer is required to install and maintain in accordance with the requirements described in this document. It will completely isolate the customer’s generating facility from the electric utility’s distribution grid. The device includes a visible open, as defined below.

Distributed Generation: Any type of customer-owned electric generator, static inverter, or generating facility that has the capability of being operated in parallel with an electric utility’s distribution system.

Distribution System: The infrastructure constructed, maintained, and operated by a utility to deliver electric service to retail customers at primary and secondary distribution voltages.

Generating Facility: All or part of the customer’s electrical generator(s) or inverter(s) together with all protective, safety, and associated equipment necessary to produce electric power at the customer’s facility.

Onsite Generation System: A facility or energy system for generating of electricity that:

A. Uses renewable energy to generate electricity.

B. Is isolated from the distribution system at the customer’s premise when the utility grid is de-energized.

C. Operates in parallel with the utility’s distribution facilities.

D. Is intended primarily to offset part or all of the customer’s requirements for electricity.

Open Position: The disconnect blades are separated from the contacts for each phase, preventing the flow of electricity between them.

Visible Open: An air gap must be visible at the trailing edge of the moveable disconnect blades when the switch is in the open position.

Disconnect Switch Requirements for Distributed Generation Customers

Customer Installed Disconnect Switches and Wiring Diagrams

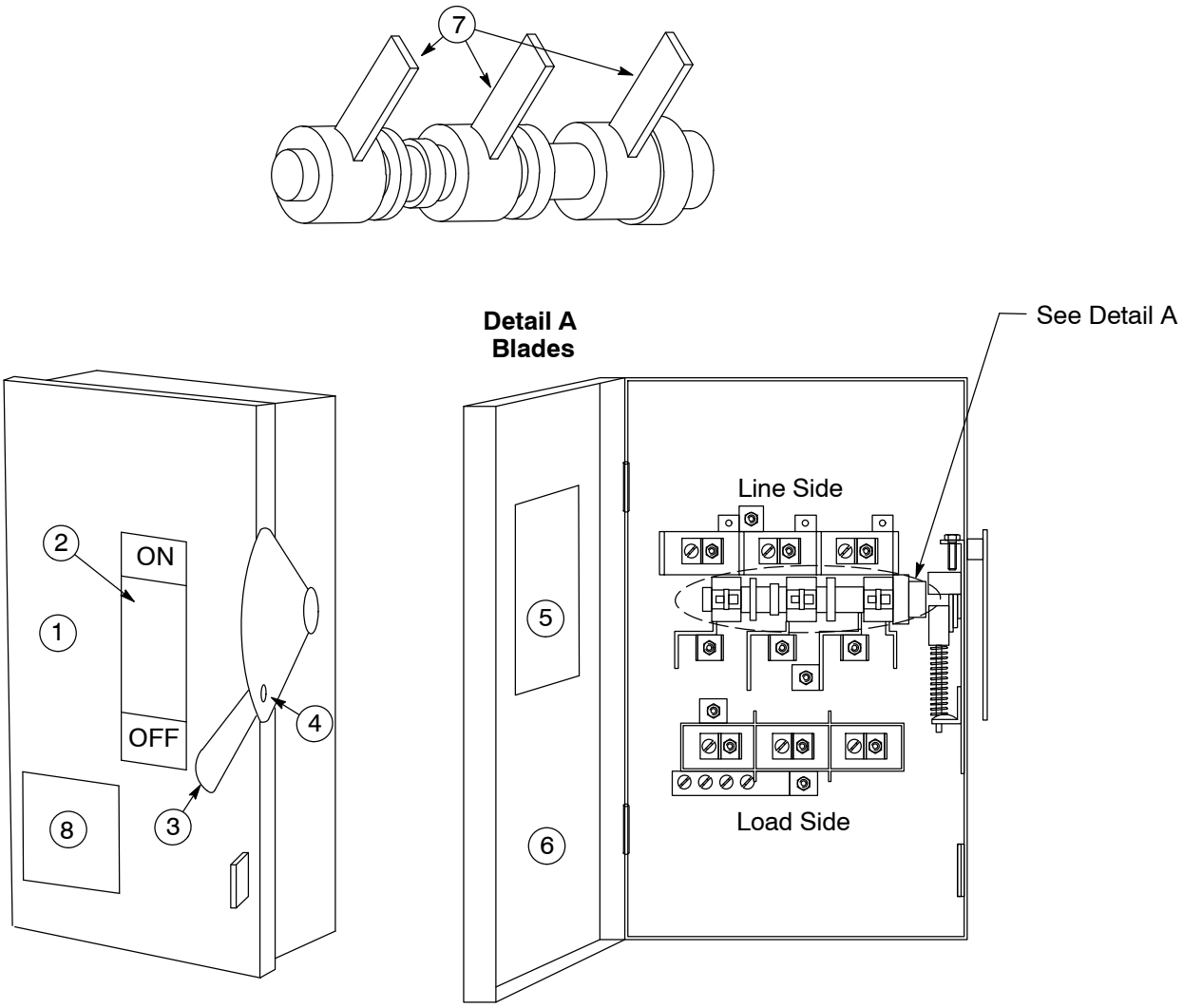

Figure 1
Typical AC Disconnect Switch

Table 1 List of Items Required for the AC Disconnect Switch

Item	Description
1	AC Disconnect Switch Enclosure – General or heavy-duty, indoor or outdoor, fused or unfused, UL/NRTL certified. As required.
2	Visible ON/OFF label.
3	Switch Handle – Manual, single pole for gang operation.
4	Provision For Locking in the Off (Open) Position – Accommodates a PG&E padlock with 5/16-inch lock shaft.
5	Device Label – Includes relevant information (device ratings, UL certification, etc.) about the device.
6	Operable Door – Allows visible verification of blade position. Viewing window is optional.
7	Blades – Solid or Fused. Allows visible verification that separation from contacts has occurred.
8	Label stating “Utility Disconnect Switch” – Placed on the outside in the front of the disconnect switch.

Disconnect Switch Requirements for Distributed Generation Customers

Customer Installed Disconnect Switches and Wiring Diagrams

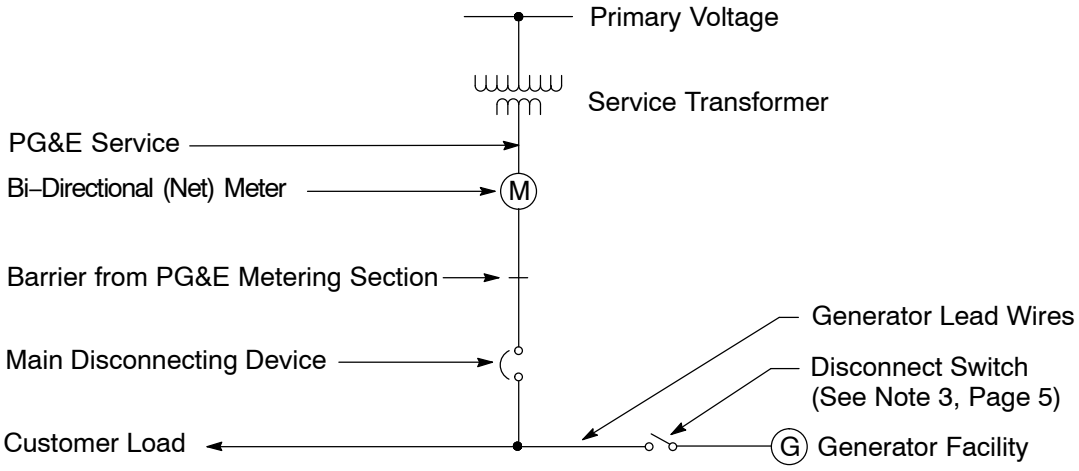

Figure 2
Typical Disconnect Switch Wiring Diagram

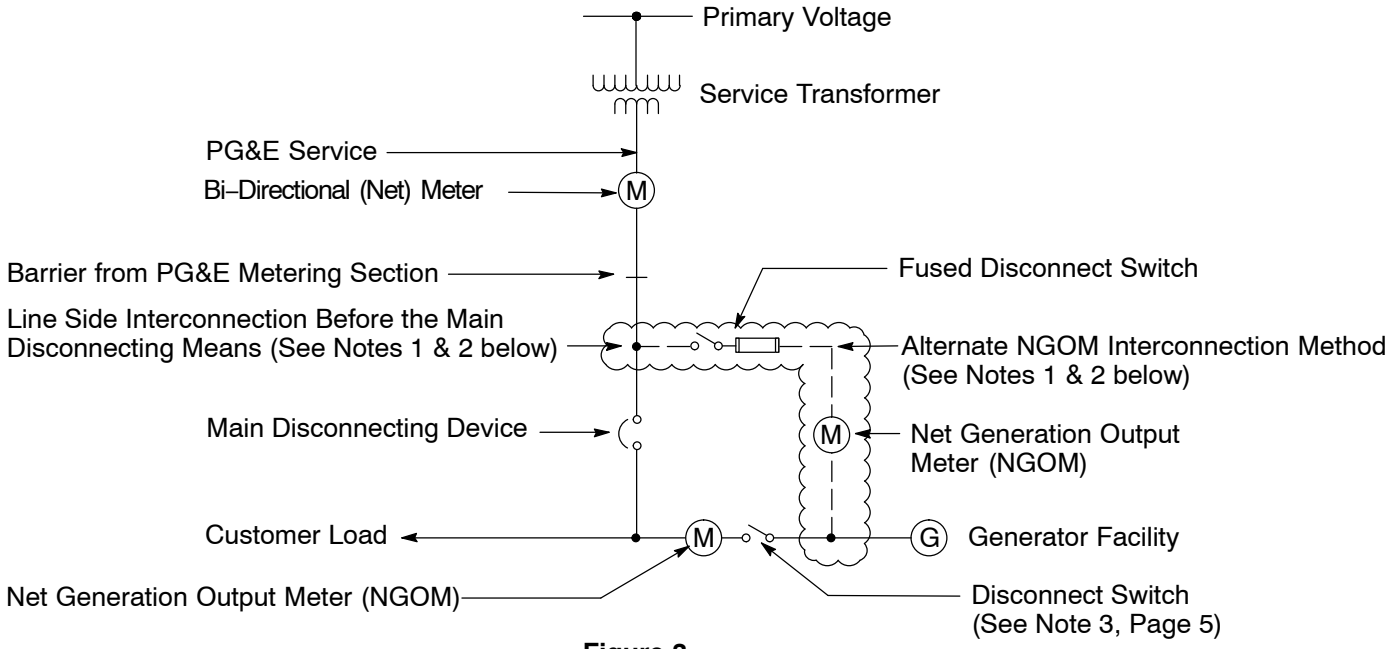

Figure 3
NGOM Disconnect Switch Interconnection

Notes for Figure 2 and Figure 3:

1. An interconnection placed before the main disconnecting device requires approval. Submit a variance request to the PG&E's Electric Generation Interconnection (EGI) Department. Customer cables and equipment are **not** allowed in any PG&E-sealed section.
2. If a line (Supply) side interconnection is approved, install a fused disconnect switch before the NGOM, as shown in Figure 3, above.
3. The disconnect switch may qualify for the exemption if all the requirements on Page 3 are met.

Revision Notes

Revision 03 has the following changes:

1. Revised Note 5 on Page 1.
2. Revised "**Basic"** on Page 2.
3. Revised Note 2 on Page 5.

Prepared by: ABB1

RESIDENTIAL AND SMALL COMMERCIAL OVERHEAD TO UNDERGROUND ELECTRIC SERVICE CONVERSION

061032

Asset Type:	Electric Metering	**Function:**	Construction
Issued by:	Quoc Hoang (QxH1)	**Date:**	04-15-11

Rev. #04: This document replaces PG&E Document 061032, Rev. #03. For a description of the changes, see Page 4.

This document is also included in the following manuals:

- *Electric and Gas Service Requirements (Greenbook)*
- *Electric Meter Work Practices*

Purpose and Scope

This document shows methods acceptable by PG&E, to be used by residential and non-residential (200-amp or less main service switch) customers when converting existing 2-wire or 3-wire overhead services to underground.

General Information

1. A typical overhead service conversion is illustrated in Figure 1 on Page 3. PG&E will install cable in a conduit system provided by the applicant. Various surface mount and semi-flush meter socket installations (illustrated in Figure 2 on Page 3 through Figure 7 on Page 4) are used with services converted to underground. The conversion option selected by the customer shall comply with all local building codes and ordinances. The customer shall furnish, install, own, and maintain termination facilities on or within the building to be served.
2. Local ordinances may include requirements in addition to those shown in this document. Consult local inspection authorities for these requirements. In areas where local ordinances require permits and inspection, these must be obtained before PG&E can establish service. PG&E will install meter(s) after an inspection clearance has been given by the appropriate electrical inspection authority.
3. When a service larger than 200 amps is desired, the customer shall consult with the local PG&E representative.
4. Service Conduit and Termination
   A. PG&E will install the underground service cable and make the connections at the service termination point in accordance with PG&E's Electric Rule 16. The underground service lateral conductors will be installed, owned, and maintained by PG&E from PG&E's distribution system to the termination facility as indicated in Figure 2 through Figure 7 on Pages 3 through 4.
   B. The customer shall provide trenching, conduit and backfill on his property in accordance with PG&E specifications and pay any costs required by PG&E's Electric Rule 16.
   C. Service conductors will be installed in conduit as shown in Figure 1 on Page 3. For conduit size, refer to PG&E Document 063927 for residential service or Document 063928 for commercial service.
   D. The customer shall contact the local PG&E office to discuss service arrangements and agree upon the "Electric Service Location" before trenching or wiring.
   E. The customer shall provide and install, in addition to termination facilities, all equipment needed to modify the service entrance when changing from overhead to underground service.
   F. For conduit type on or within the applicant's building, refer to PG&E Document 063927 or Document 063928. Also consult local code authority.
   G. Install bend in direction of service trench. To facilitate cable installation, only one 90° bend is permitted in the riser. If a deeper trench is required, a minimum radius bend, per PG&E Document 063927 or Document 063928, shall be installed to the same depth as the trench.

H. If the trench is used jointly with other facilities (telephone, cable TV, etc.), increased cable depth may be required. Refer to PG&E's electrical and gas service requirements *Electric and Gas Service Requirements Manual (Greenbook)* Appendix B, Electric and Gas Service Documents: Joint Trench Configurations and Occupancy Guide.

I. Size and type of cable, conduit, and other facilities on the load side of the service termination point are subject to local code requirements.

J. To avoid cable insulation damage, the ends of all risers shall be provided with a suitable termination fitting such as bushing, nipple, hub or end bell, etc.

K. Pull termination box as specified in Table 1 on below. Item 6 is for service up to 250 kcmil cable. For larger conductor, size box as required. See PG&E Document 058817.

L. The point where PG&E's service conductors connect to the customer's conductors, as shown in Figure 2 on Page 3 through Figure 7 on Page 4, is identified as the "PG&E Service Termination Point."

M. Item 3 in Figure 4 on Page 4 and Figure 5 on Page 4, may be used only if the service conductor is 1/0 AWG or smaller, and can be pulled from the PG&E end of the service.

N. Customer may install short-radius conduit fitting (i.e. service elbows that prevent water from penetrating the fitting at termination to meter panel). Short radius conduit fittings should not contain splices or taps. The cover also must be sealable by PG&E personnel.

5. Grounding: The customer shall be responsible for bonding and grounding all exposed non-current-carrying metal parts. Grounding shall be in accordance with the National Electric Code (NEC) and local ordinances, except that the grounding wire shall be protected against mechanical damage by rigid steel conduit or armored copper ground wire.

6. Metering Requirements: Meter will be furnished and installed by PG&E.

References	Location	Document
Trench and Installation Requirements for URD Cable	ELS	040686
Terminating Underground Electric Services 0–600 Volt in Customer-Owned Facilities	UG-1: Services/Greenbook	058817
Methods and Requirement for Installing Residential Underground Electric Services 0–600 V to Customer-Owned Facilities	UG-1: Services/Greenbook	063927
Methods and Requirements for Installing Commercial Underground Electric Services 0–600 Volts to Customer-Owned Facilities	UG-1: Services/Greenbook	063928

Table 1 Description of Items to be Furnished and Installed by Customer

Item	Description
1	Option 1: Meter Adapter, Cooper B-Line Cat. No. MARR20L45GRSD (160A) Use with Customer's Panel Rated at 160A Continuous [1, 2]
	Option 2: Meter Adapter, Ekstrom Industries No. 722B (175A). Specify Left, Right, or Bottom Hub
2	Combination Service Meter and Breaker Panel (rating as required)
3	Pull Termination Box, 8" x 12" x 4", Rain-Tight, Circle A-W (Cooper B-Line) No. R-9007A or Equivalent (see Note 4M on Page 2)
4	Conduit, See Notes 4C and 4G on Page 1
5	Hub to Be Closed and Made Tamper Proof
6	Pull Termination Box, 12" x 26" x 6", Rain-Tight, Circle A-W Catalog Number R-90008, or Equivalent (see Note 4K on Page 2)

[1] Fifth jaw accessory, use Cooper B-Line Cat. No. 50365.
[2] Reducer hub and gasket accessories for 2" conduit, use Cooper B-Line Cat. No. AW200 and 12750A.

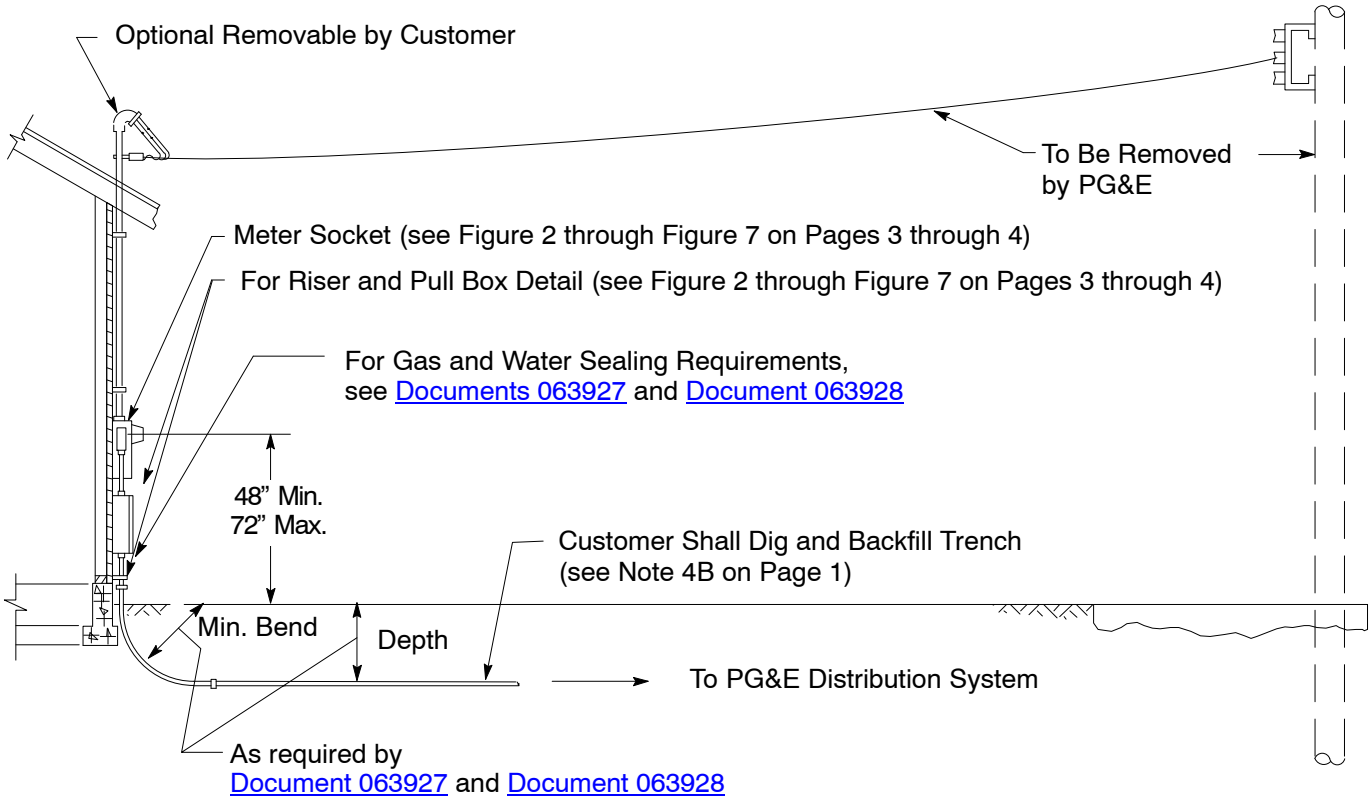

Figure 1
Typical Service Conversion

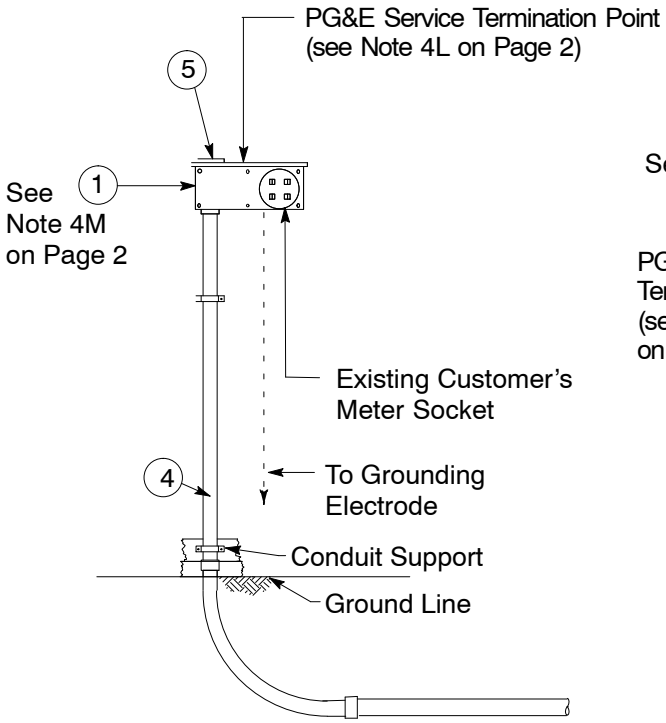

Figure 2
Cooper B-Line Meter Adapter

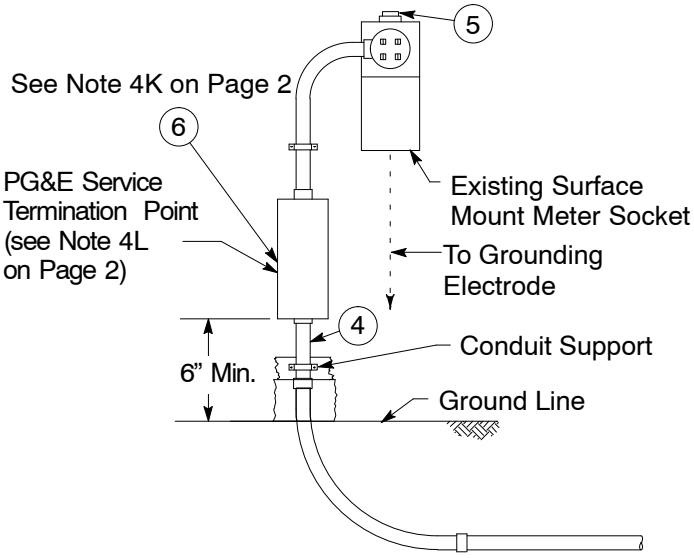

Figure 3
Surface Mount Meter Socket

Residential and Small Commercial Overhead to Underground Electric Service Conversion

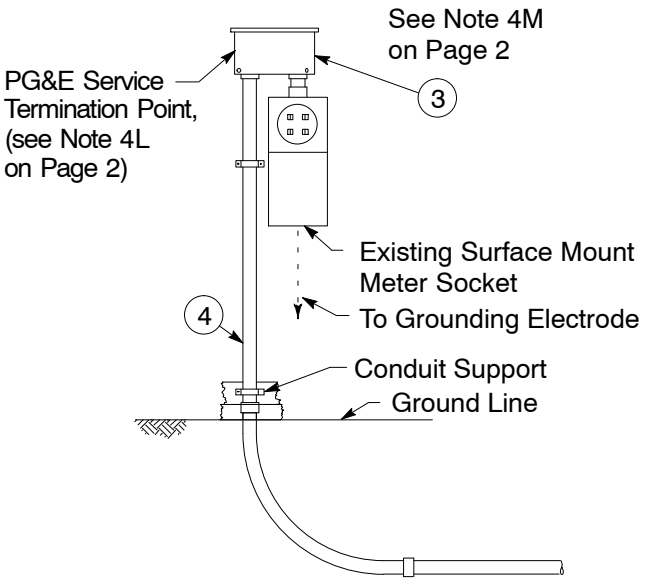

Figure 4
Surface Mount Meter Socket

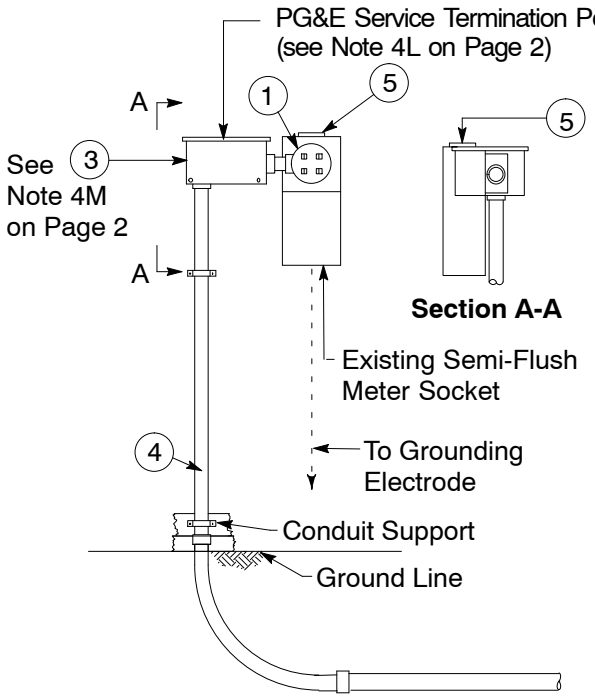

Figure 5
Semi-Flush Meter Socket

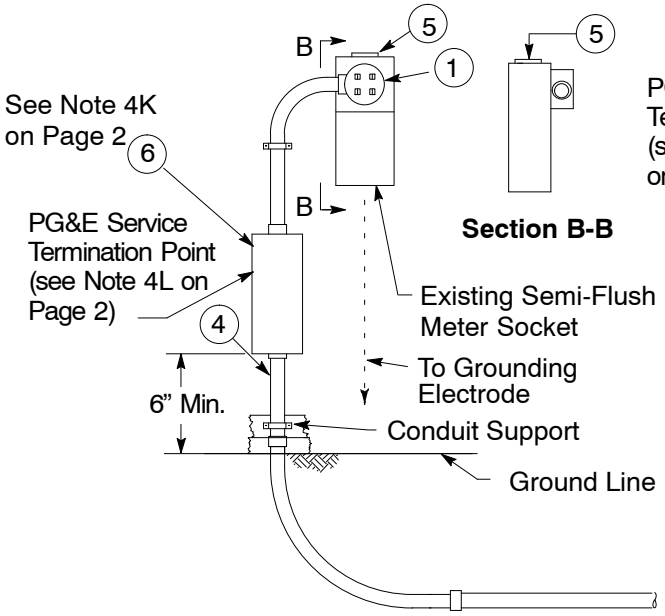

Figure 6
Semi-Flush Meter Socket

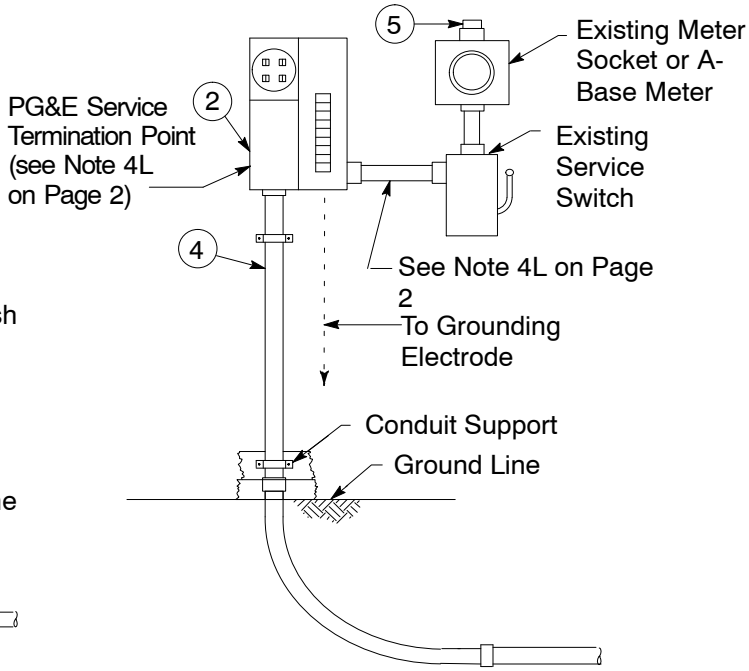

Figure 7
2-Wire or A-Base Meter Connection

Revision Notes

Revision 04 has the following changes:

1. Revised Note 4G on Page 1.
2. Revised Table 1 and Note 4H, and added Note 4N on Page 2.
3. Revised minimum depth and radius bend in Figure 1 on Page 3.
4. Added Figure 2 on Page 3 with new B-Line meter adapter.

Prepared by: ABB1

PRIMARY ELECTRIC UNDERGROUND ENCLOSURES

062000

Asset Type:	Electric Distribution	**Function:**	Design and Construction
Issued by:	Lisseth Villareal (LDV2)	**Date:**	07-01-16

Rev. #20: This document replaces PG&E Document 062000, Rev. #19 For a description of the changes, see Page 26.

Purpose and Scope

This document provides dimensions, illustrations, and ordering information for surface-operable, primary, electric underground equipment and splice enclosures. The primary enclosures shown in this document are the preferred enclosures. Precast and poured-in-place manholes should be used only when space for surface-operable enclosures cannot be obtained.

General Information

1. Monolithically poured concrete enclosures may be provided by the supplier, for any depth combination of body and extension, if the enclosure is delivered “in-hole” by the supplier. Precast and poured-in-place enclosures shall meet the requirements herein.
2. Size all enclosures to accommodate the largest size cable or piece of equipment that may ultimately be installed for 600-Amp and 200-Amp distribution circuits.
3. The greatest cost savings is achieved by taking delivery of the enclosure at the jobsite and using supplier’s equipment to install the enclosure into the prepared excavation.
4. Design, design loads, concrete, and reinforcing steel materials, concrete mixes, and construction of enclosures shall meet the requirements of ASTM C858, as modified herein, in the Engineering Material Specifications 53, and in Document 072149.
5. It is the responsibility of the installing party to check and prepare the jobsite as follows:
   A. Make space available for the supplier’s equipment and/or a crane.
   B. Arrange for the removal of any overhead facilities that might prohibit the use of the supplier’s equipment and/or crane (if necessary).
   C. Provide the excavation in the proper location and of the correct size, depth, and alignment, dewatered as needed.
   D. Prepare the excavation with 6 inches of compacted, 3/4-inch minus rock base or base rock unless drain rock is required by Document 072149. Provide for backfilling, compaction, and resurfacing.
   E. Provide the necessary manpower to assist in the installation of the enclosure.
6. Mastic sealant is to be provided by the supplier for all concrete-to-concrete joints. Mastic sealant must be installed for all concrete-to-concrete joints.
7. The frame shall be grouted to the enclosure. When grade-adjustment bolts are used, the adjustment bolts are to be completely removed from the frame after grouting. Install enclosures as level as practical, but do not exceed 1/8” per foot slope.
8. **Do not** break out the bottom of the sump hole. The compacted rock base is for leveling the enclosure, not for drainage.
9. The enclosures in this document are equipped with conduit terminators. When entering these enclosures with conduit of a different diameter than the terminator, use a swedge reducer (Document 062288). New enclosure design no longer has a knockout window. If working with existing enclosures, and need to enter through a knockout, use an end bell and grout.
10. Pulling Irons
    Pulling irons shall be designed for 20,000 pounds ultimate, with a safety factor of two (40,000 pounds).

11. Lifting
    A. All extensions shall be provided with four 7/8-inch diameter, 2-1/4-inch minimum deep inserts with unified coarse thread, Class 2A threads.
    B. Boxes shall be lifted using pulling irons in the floor.
12. Marking
    A. All covers shall be marked with one “High Voltage” and three blank number ID plates in accordance with Document 051768.
    B. All concrete parts shall be permanently identified with the manufacturer’s name on the inside and outside surfaces.
    C. All concrete parts shall have the weight stenciled on the outside surface.
13. All bodies and extensions shall conform to the dimensional specifications so as to be fully interchangeable with the bodies and extensions of all other manufacturers.
14. All covers shall have a PG&E-approved, high coefficient of friction (0.65 or better), slip-resistant surface.
15. Grounding is required for all new primary concrete enclosures. Grounding is highly recommended to existing primary enclosures. For grounding requirements of the enclosure refer to Document 060462.

Application

16. General: Selection of the correct type of enclosure involves judgment, taking into account the present and future intended traffic for the area where the enclosure will be located, and future cable or equipment changes.
17. Incidental-vehicular-traffic (ASTM C-857, Rating H-10-44, light traffic): For use in sidewalks, paved and unpaved pedestrian areas, parkway strips adjacent to curbs, and any other area subject to occasional vehicular traffic up to 10 tons gross vehicle weight (GVW) and/or 10 mph speed limits.
18. Full-vehicular-traffic (ASTM C-857, Rating HS-20-44, full traffic): Quick-release covers designed for H-20 vehicular wheel load but not subject to high-density traffic with speed higher than 25 mph; locations such as alleys, driveways, parking strips, etc.
19. Heavy full-vehicular-traffic (ASTM C-857, Rating HS-20-44, heavy traffic): For use in streets and all other areas subject to vehicular traffic in excess of 10 tons GVW, but not to exceed 20 tons GVW. Entrance into this type of enclosure shall not be made through an opened gate.
20. Heavy full-vehicular-traffic enclosures are not to be used to install sectionalizing equipment or transformers, except on projects where a location for an incidental-vehicular-traffic box is not available.

References	Location	Document
Cable Support for Underground Use	UG-1: Splices	028077
Identification Plates for Subsurface Enclosures	UG-1: Marking	051768
Duplex-Type, Three-Phase, Subsurface Transformer	UG-1: Transformers	051776
Grounding of Underground Equipment	UG-1: General	060462
Underground Conduits	UG-1: Conduits	062288
Requirements for Allowing Installation of Subsurface Transformers	UG–1: General/Greenbook	072149
Design Requirements for Primary Electric Distribution Underground Concrete Enclosures	TIL	EMS 53

Primary Electric Underground Enclosures

Table 1 Enclosure and Excavation Sizes for New Installations of Subsurface Equipment

Application	Location		Enclosure Size [4]	Excavation Size [1]	
	Incidental and Full Traffic	Heavy Full Traffic		Incidental and Full Traffic	Heavy Full-Traffic
200-Amp Cable and Non-Lead Splices	Yes	Yes	3’ x 5’ x 3 ’ 6”	5’ x 7’ x 5’	5’ x 7’ x 6’
200-Amp Junctions		No	4’ x 6’ 6” x 5’	6’ x 8’ 6” x 6’ 6”	–
200-Amp Sectionalizing Switches		Yes [2]	4’ x 6’ 6” x 5	6’ x 8’ 6” x 6’ 6”	6’ x 8’ 6” x 7’ 6”
200-Amp Subsurface Fused Switches		No	4’ x 6’ 6” x 5’	6’ x 8’ 6” x 6’ 6”	–
200-Amp Automatic Interrupter		No	4’ x 6’ 6” x 5’	6’ x 8’ 6” x 6’ 6”	–
1Ø Horizontal Transformers		Yes	4’ x 6’ 6” x 5’	6’ x 8’ 6” x 6’ 6”	6’ x 8’ 6” x 7’ 6”
600-Amp Cable, Non-Lead Splices		Yes	4’ 6” x 8’ 6” x 6’	6’ 6” x 10’ 6” x 7’ 6”	6’ 6” x 10’ 6” x 8’ 6”
600-Amp Separable Connectors		No	4’ 6” x 8’ 6” x 6’	6’ 6” x 10’ 6 ”x 7’ 6”	–
600-Amp Sectionalizing Switch		Yes [2]	4’ 6” x 8’ 6” x 6’	6’ 6” x 10’ 6” x 7’ 6”	
600-Amp Scada Switch		No	4’ 6” x 8’ 6” x 6’	6’ 6” x 10’ 6” x 9’	–
600-Amp Automatic Interrupter		No	4’ 6” x 8’ 6” x 6’	6’ 6” x 10’ 6 ”x 7’ 6”	–
3Ø Duplex Transformer [3]		Yes [2]	4’ 6” x 8’ 6” x 6’	6’ 6” x 10’ 6” x 7’ 6”	6’ 6” x 10’ 6” x 8’ 6”
3Ø UCD (112.5 through1,000 kVA)		Yes [2]	4’ 6” x 8’ 6” x 7’ 6”	6’ 6” x 10’ 6” x 9’	6’ 6” x 10’ 6” x 10’

1 Depth allows for 6” of a compacted, 3/4” minus rock base.
2 Installing this equipment in heavy full-traffic enclosures is the least desirable option, and should only be considered on reconstruction projects where suitable locations for incidental and full vehicle traffic boxes are not available. Refer to Item 20 in the Application section of this document.
3 See Document 051776.
4 The 12” extension that is included in the heavy full-traffic assembly is not listed in this column.

Notes

1. Existing 3’ x 5’ (#5) enclosure will continue to be allowed when replacing existing 200-Amp slice, junction, equipment.
2. When intercepting existing 200-Amp primary cable to install 200-Amp equipment, the installation of a 3’ x 5’ (#5) enclosure will only be allowed if there is no physical space for the installation of a 4’ x 6’ 6” (#6) enclosure and all other design alternatives have been exhausted. However, installation of 100 or 167 kVA single phase transformers requires a 4’ x 6’ 6” (#6) enclosure.
3. The installation of 200-Amp junction and equipment is not allowed in 3’ x 5’ (#5) primary enclosure for **new** PG&E job estimates or Applicant Design (AD) estimates.

3’ 0” x 5’ 0” (#5) Complete Enclosure Assemblies (incidental transformer cover shown)

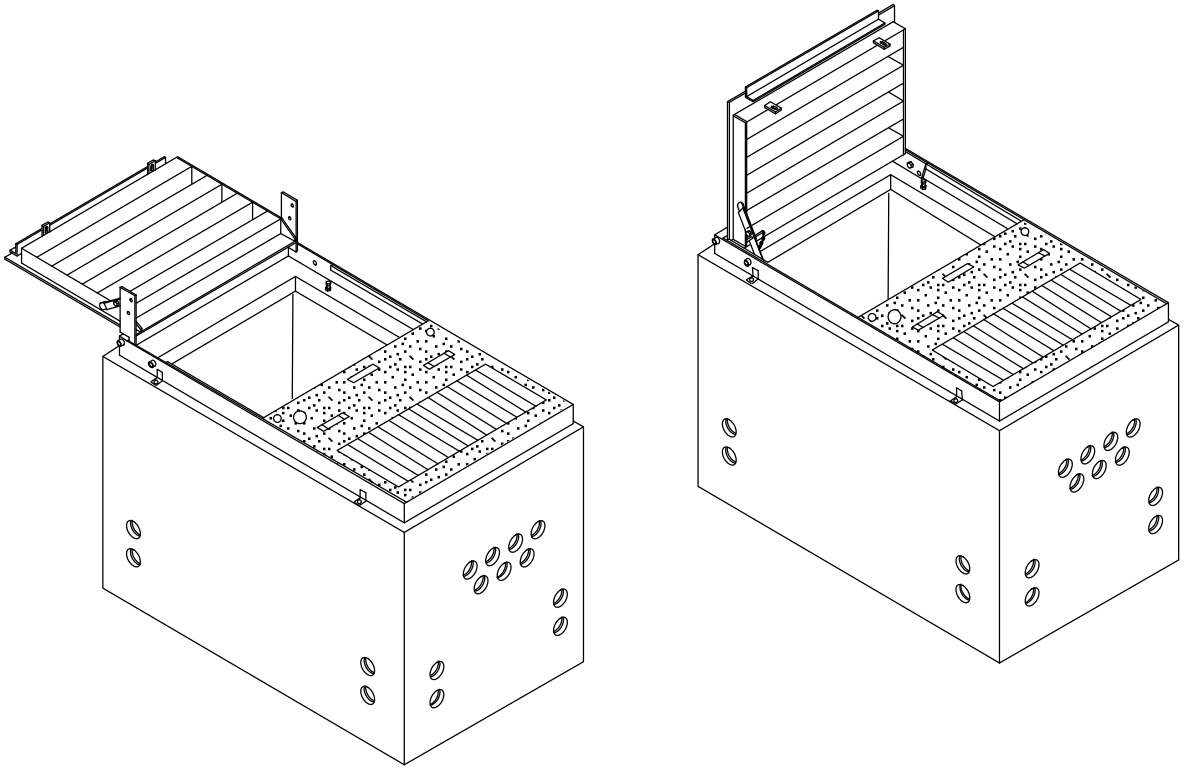

Figure 1
Isometric View of 3’ x 5’ Enclosure Assembly
(not to scale)

Table 2 Complete Enclosure Assembly (for 200-Amp distribution)

Application	Enclosure Size	Type of Traffic Loading	Type of Cover	Code [1]
Splice Box	3’ x 5’ x 3’ 6”	Incidental	Quick-Release Aluminum	025601
	3’ x 5’ x 3’ 6”	Full-Traffic	Quick-Release Steel	041668
	3’ x 5’ x 4’ 6”	Heavy Full-Traffic	Concrete	041612
	3’ x 5’ x 4’ 6”	Incidental	Quick-Release Steel	040334
	3’ x 5’ x 4’ 6”	Full-Traffic	Quick-Release Steel	041669
	3’ x 5’ x 5’ 6”	Heavy Full-Traffic	Concrete	040327

[1] Code includes body, frame, and cover assembly. The heavy full-traffic assembly also includes a 12” extension. When extra depth is required, order additional extension from Table 4 on Page 6.

3' 0" x 5' 0" (#5) Complete Enclosure Assemblies (continued)

Table 3 Complete Frame and Cover Assembly

Type of Enclosure	Type of Traffic Loading	Type of Cover	Code
Splice Box	Incidental	Quick-Release Aluminum	025604
	Full-Traffic[1]	Quick-Release Steel	041052
	Heavy Full-Traffic	Concrete	041616

[1] For application guide, see Note 18 on Page 2.

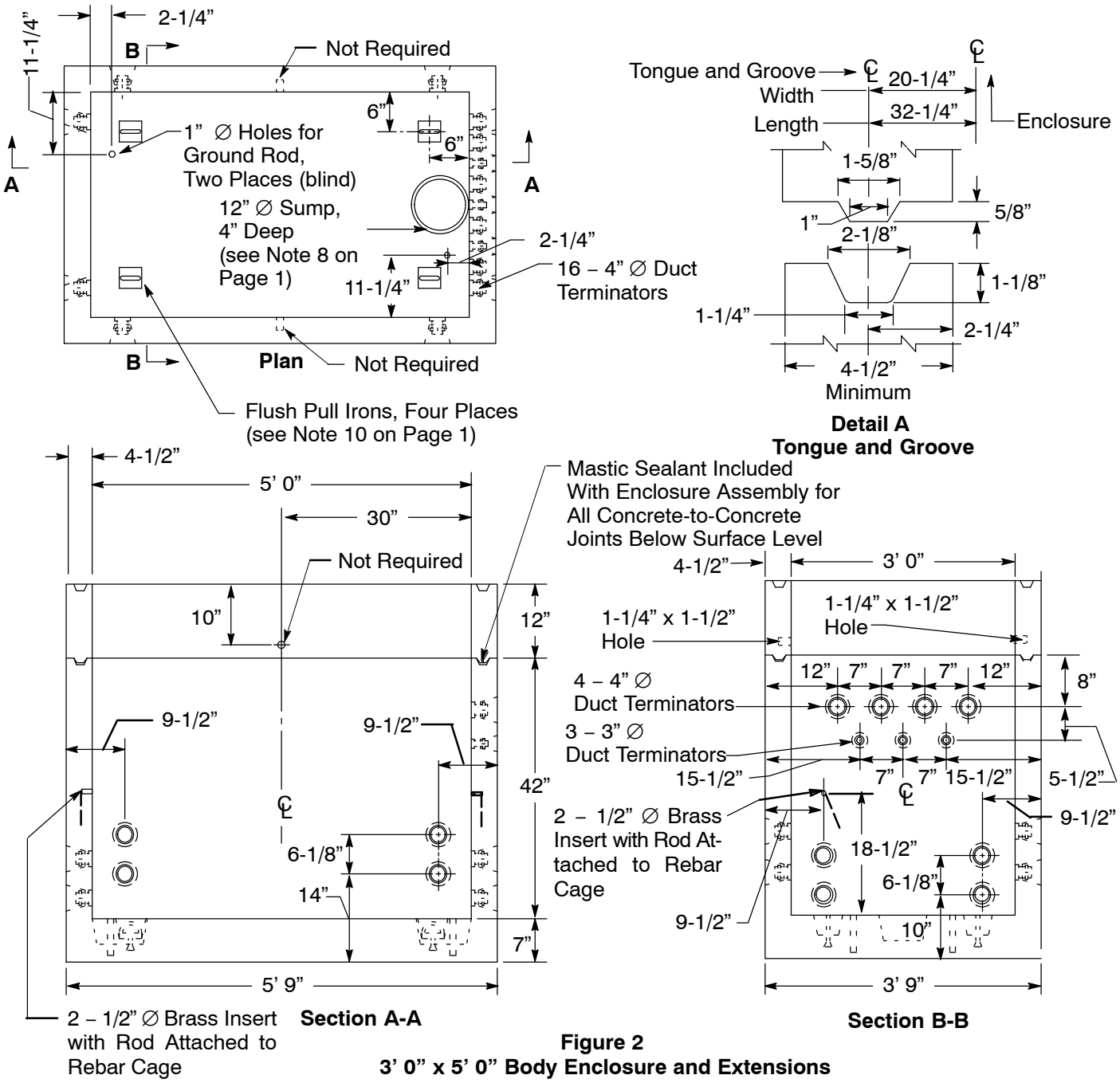

Figure 2
3' 0" x 5' 0" Body Enclosure and Extensions

3' 0" x 5' 0" (#5) Complete Enclosure Assemblies (continued)

Table 4 Codes for Enclosure (Figure 2 on Page 5)

Description	Code	Weight - Approximate (lbs.)
Body, 42" Depth	043361	5,940
Body, 54" Depth	043588	7,060
Extension, 6" Depth [1]	043197	560
Extension,12" Depth [1]	043362	1,130
Extension, 24" Depth [1]	043531	2,250

[1] Joints must be interchangeable with those shown in Detail A on Page 5 and approved by PG&E electric distribution personnel.

3' 0" x 5' 0" (#5) Aluminum Quick-Release Cover Assembly – Incidental Traffic

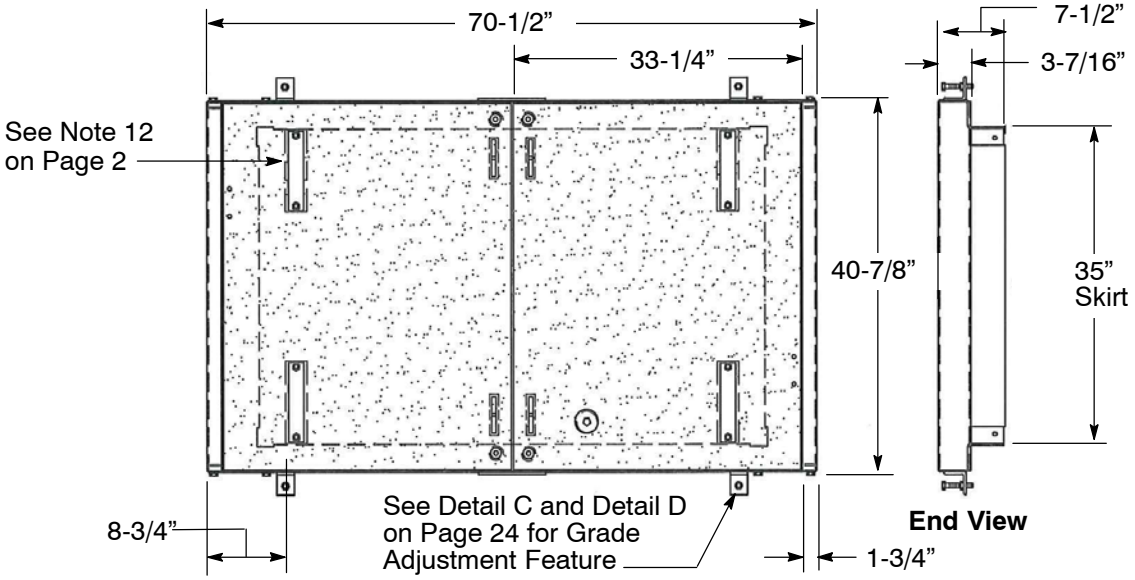

Plan
Equipment Frame and Cover Assembly

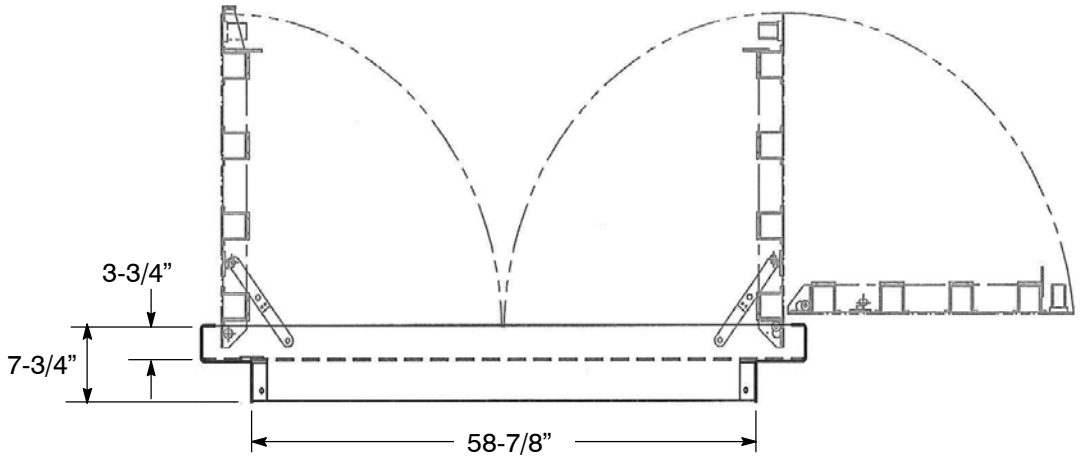

Side View

Figure 3
3' 0" x 5' 0" Quick Release Cover Assembly – Incidental Traffic

3’ 0” x 5’ 0” (#5) Aluminum Quick-Release Cover Assembly - Incidental Traffic (continued)

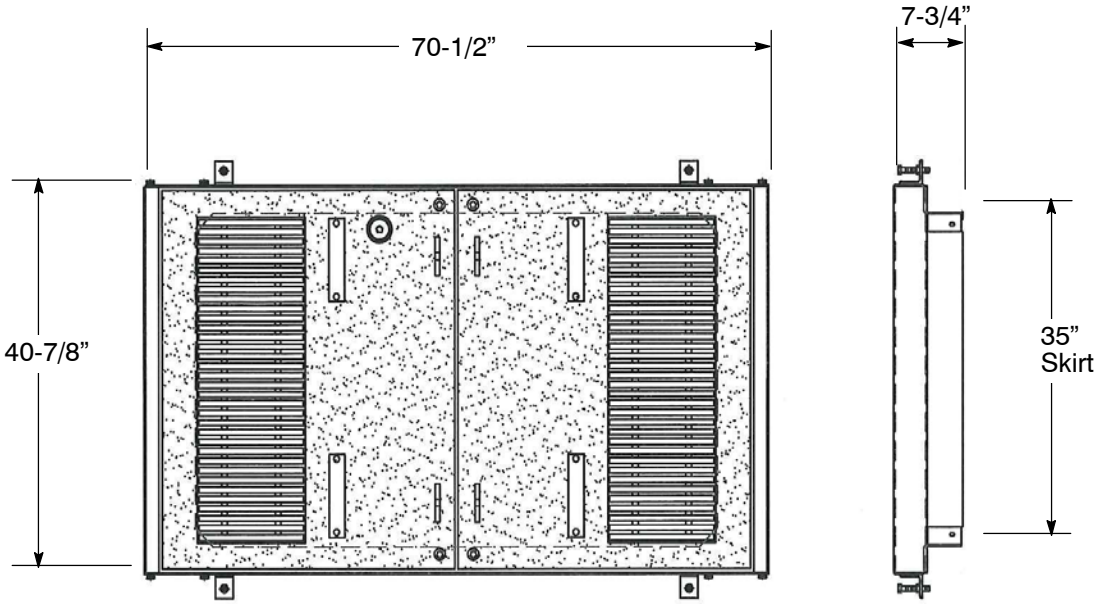

Plan
Equipment Frame and Cover Assembly

End View

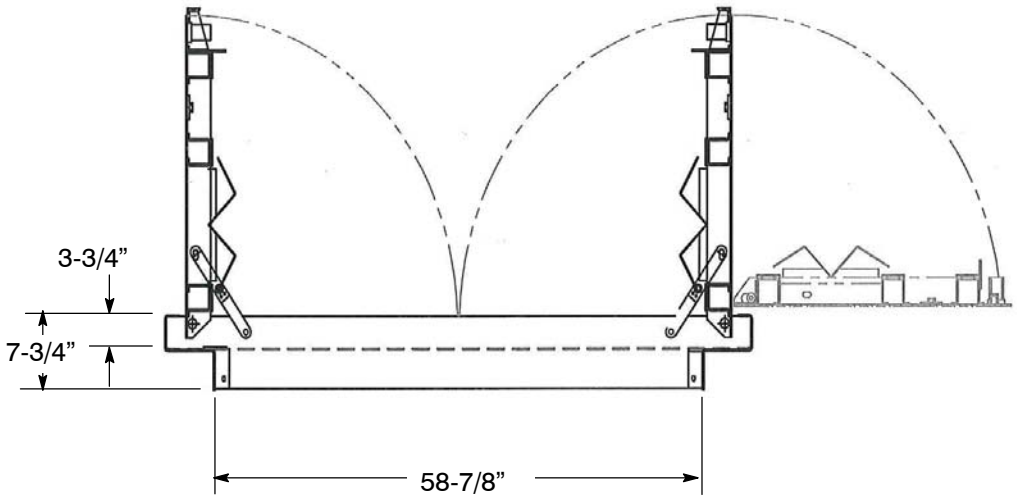

Side View

Figure 4
3’ 0” x 5’ 0” Quick-Release Cover Assembly - Incidental Traffic

3’ 0” x 5’ 0” (#5)Steel Quick-Release Cover Assembly – Full Traffic

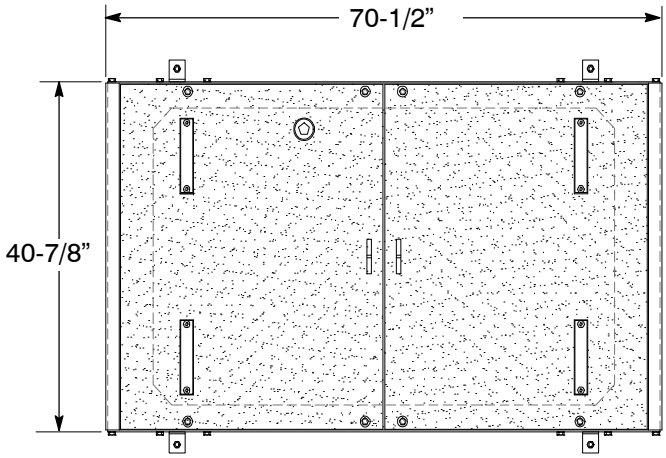

Plan
Equipment Frame and Cover Assembly

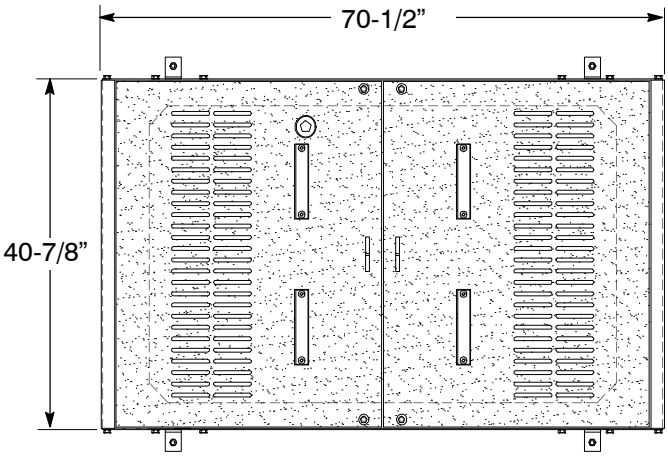

Plan
Transformer Frame and Cover Assembly

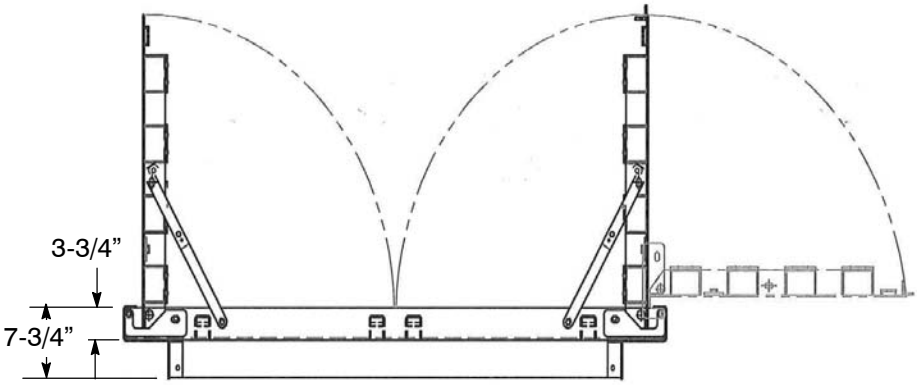

Equipment Cover
Side View

Figure 5
3’ 0’ x 5’ 0” Quick-Release Cover Assembly - Full Traffic

3’ 0” x 5’ 0” (#5) Heavy Full-Traffic Cover Assemblies

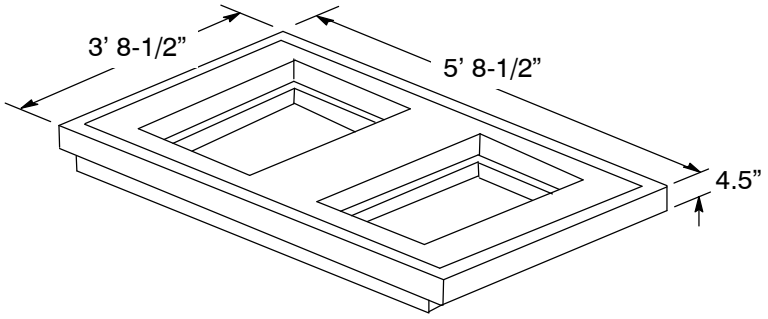

Heavy Full-Traffic Cover

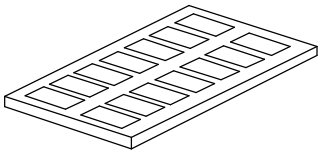

Grated Heavy Full-Traffic Cast Iron Insert

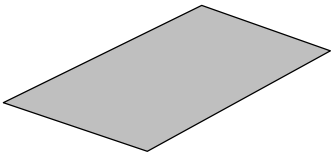

Solid Heavy Full-Traffic Cast Iron Insert

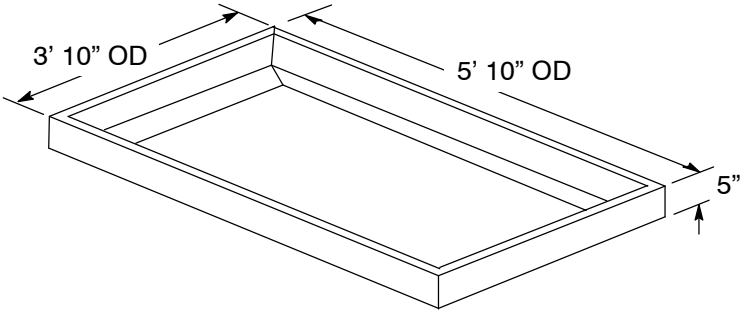

Heavy Full-Traffic Frame

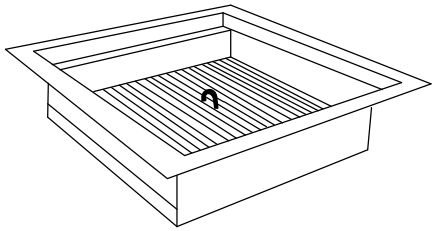

Baffle

Figure 6
3’ 0” x 5’ 0” Heavy Full-Traffic Cover Assemblies

Table 5 Component Parts

Description	Weight	Code
3’ x 5’ HFVT, Concrete Cover Without Inserts	1,160 lbs.	040338
3’ x 5’ HFVT, 5’ x 5’ x 1/2” Steel Frame With Adjustment Feature	290 lbs.	040339
Cast Iron Grate Inserts for Transformer Enclosures	120 lbs.	040346
Cast Iron Solid Inserts for Splice/Equipment Enclosures	180 lbs.	040343
Baffle	25 lbs.	360036

4’ 0” x 6’ 6” (#6) Complete Enclosure Assemblies (incidental transformer shown)

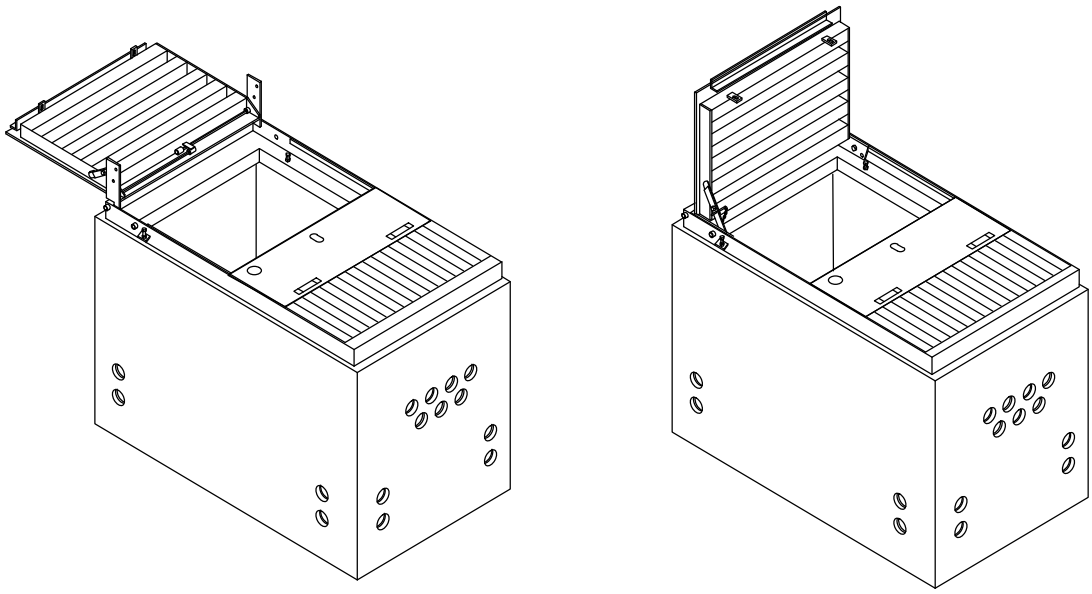

Figure 7
Isometric View of 4’ 0” x 6’ 6” Enclosure Assembly
(not to scale)

Table 6 Complete Enclosure Assembly (for 200-amp distribution)

Application	Enclosure Size	Type of Traffic	Type of Cover	Code [1]
1∅ Horizontal Transformers	4’ 0” x 6’ 6” x 5’ 0”	Incidental	Quick-Release Aluminum	041492
	4’ 0” x 6’ 6” x 5’ 0”	Full-Traffic	Quick-Release Steel	041493
	4’ 0” x 6’ 6” x 6’ 0”	Heavy Full-Traffic	Concrete	041494
Equipment/Splice Box	4’ 0” x 6’ 6” x 5’ 0”	Incidental	Quick-Release Aluminum	041495
	4’ 0” x 6’ 6” x 5’ 0”	Full-Traffic	Quick-Release Steel	041496
	4’ 0” x 6’ 6” x 6’ 0”	Heavy Full-Traffic	Concrete	041521

1 Code includes body, frame, and cover assembly. The heavy full-traffic assembly also includes a 12” extension. When extra depth is required, order additional extension fromTable 8 on Page12.

Table 7 Complete Frame and Cover Assembly

Type of Enclosure	Type of Traffic	Type of cover	Code
1∅ Horizontal Transformers	Incidental	Quick-Release Aluminum	041092
	Full-Traffic[1]	Quick-Release Steel	360148
	Heavy Full-Traffic	Concrete	041541
Equipment/Splice Box	Incidental	Quick-Release Aluminum	041093
	Full-Traffic[1]	Quick-Release Steel	360149
	Heavy Full-Traffic	Concrete	041557

1 For application guide, see Note 18 on Page 2.

4’ 0” x 6’ 6” (#6) Enclosure and Extensions

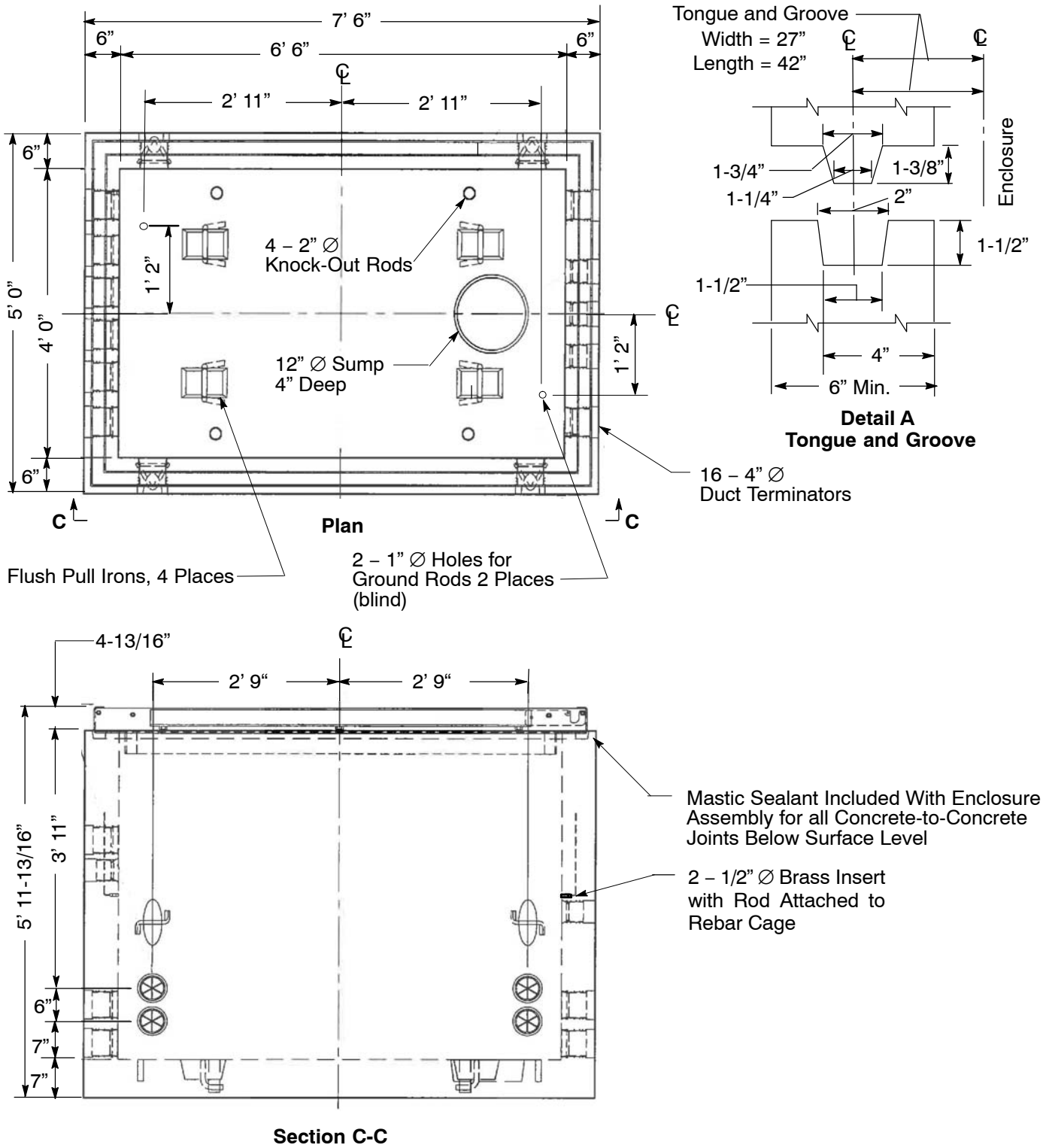

Figure 8
4’ 0” x 6’ 6” Body Enclosure

4’ 0” x 6’ 6” (#6) Enclosure and Extensions (continued)

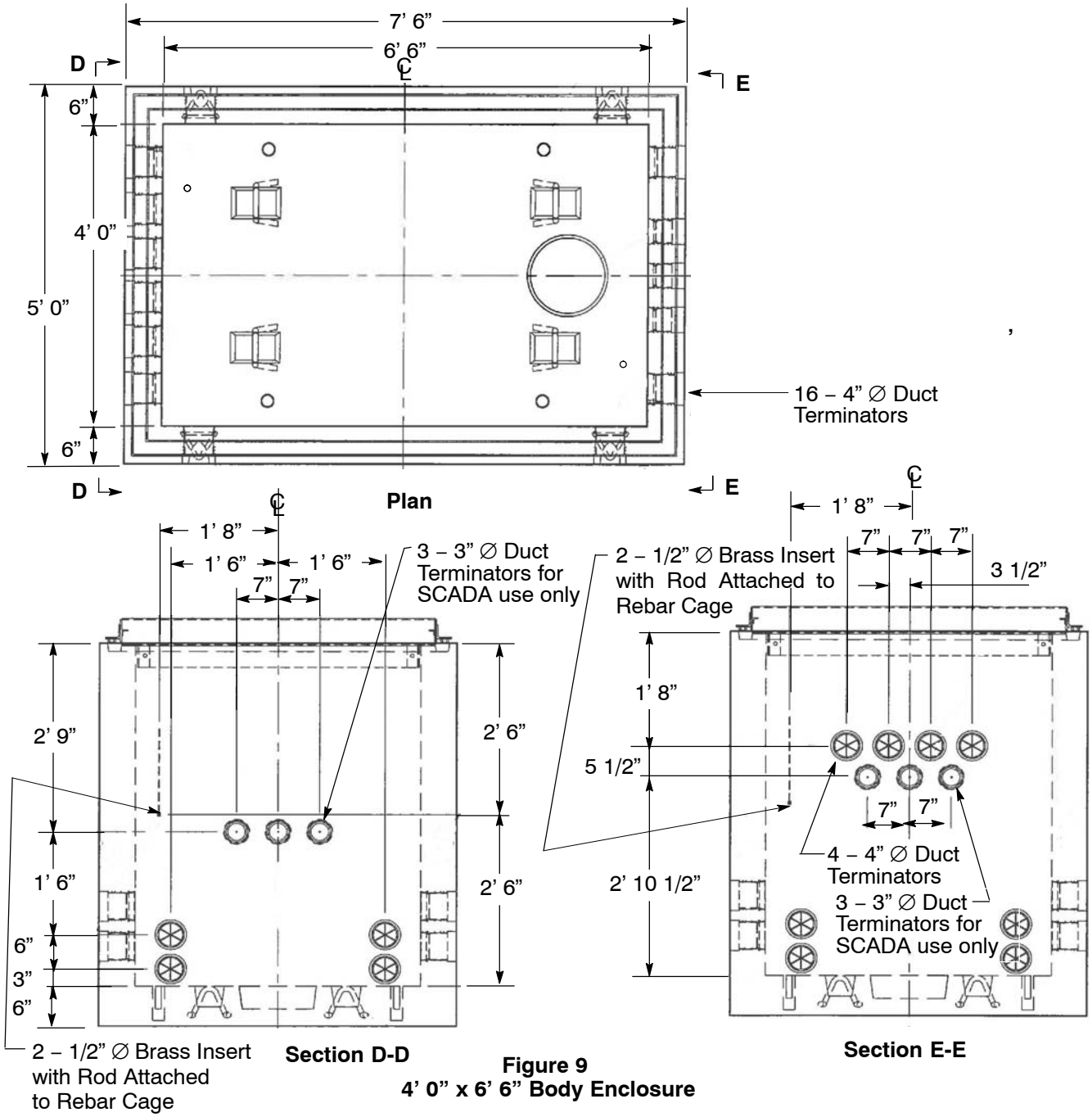

Figure 9
4’ 0” x 6’ 6” Body Enclosure

Table 8 Parts for Enclosure Replacement (Figure 8 on Page 11)

Item	Description	Code	Weight - Approximate (lbs.)
1	Body, 60” Depth	041567	11,750
2	Extension, 6” Depth [1]	041569	800
3	Extension, 12” Depth [1]	041570	1,600
4	Extension, 18” Depth [1]	041574	2,400

[1] Joints must be interchangeable with those shown in Detail A on Page 11 and approved by PG&E electric distribution personnel.

4’ 0” x 6’ 6”(#6) Aluminum Quick-Release Cover Assembly – Incidental Traffic

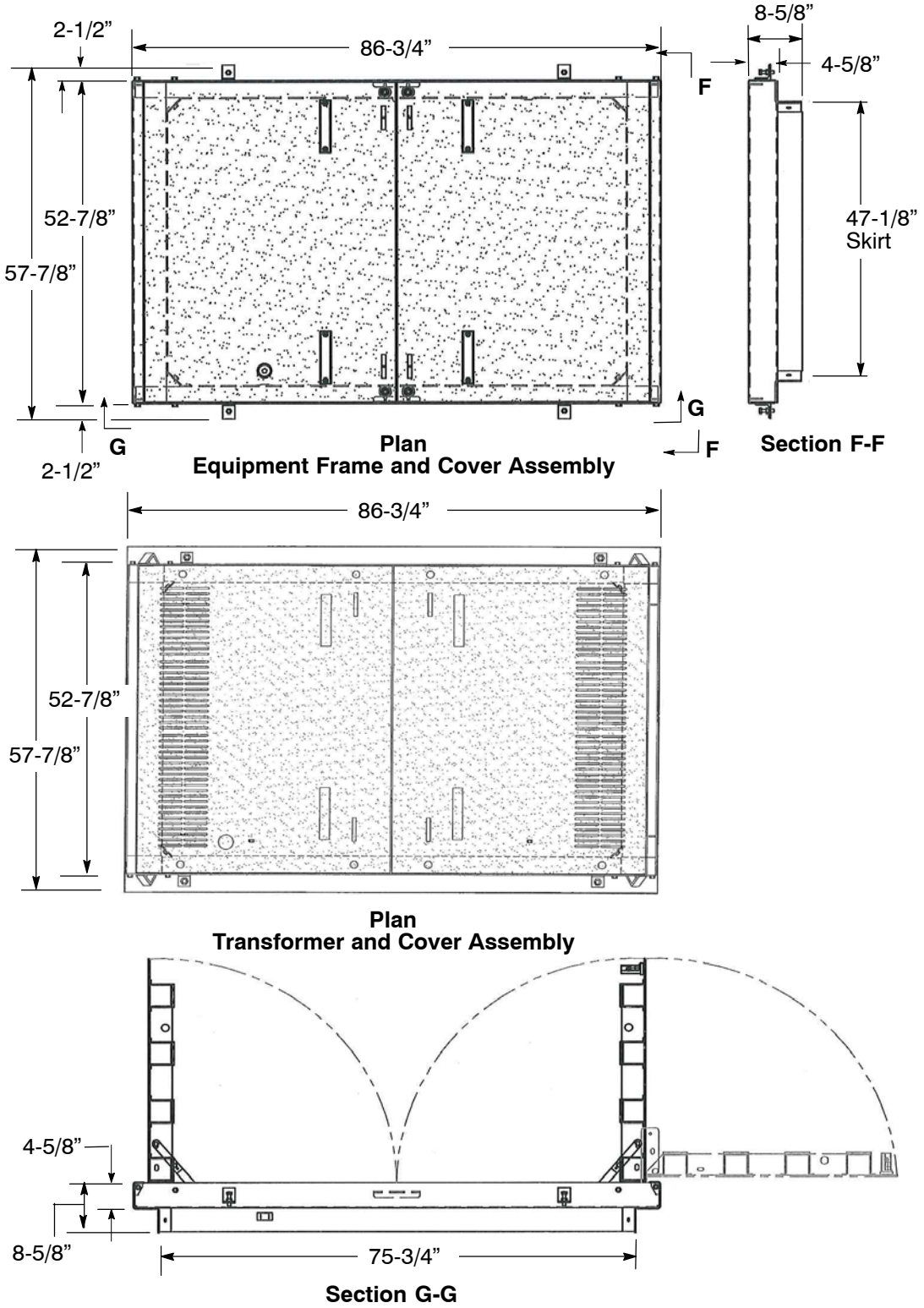

Figure 10
4’ 6” x 6’ 6” Quick-Release Cover Assembly – Incidental Traffic

4’ 0” x 6’ 6” (#6) Steel Quick-Release Cover Assembly – Full Traffic

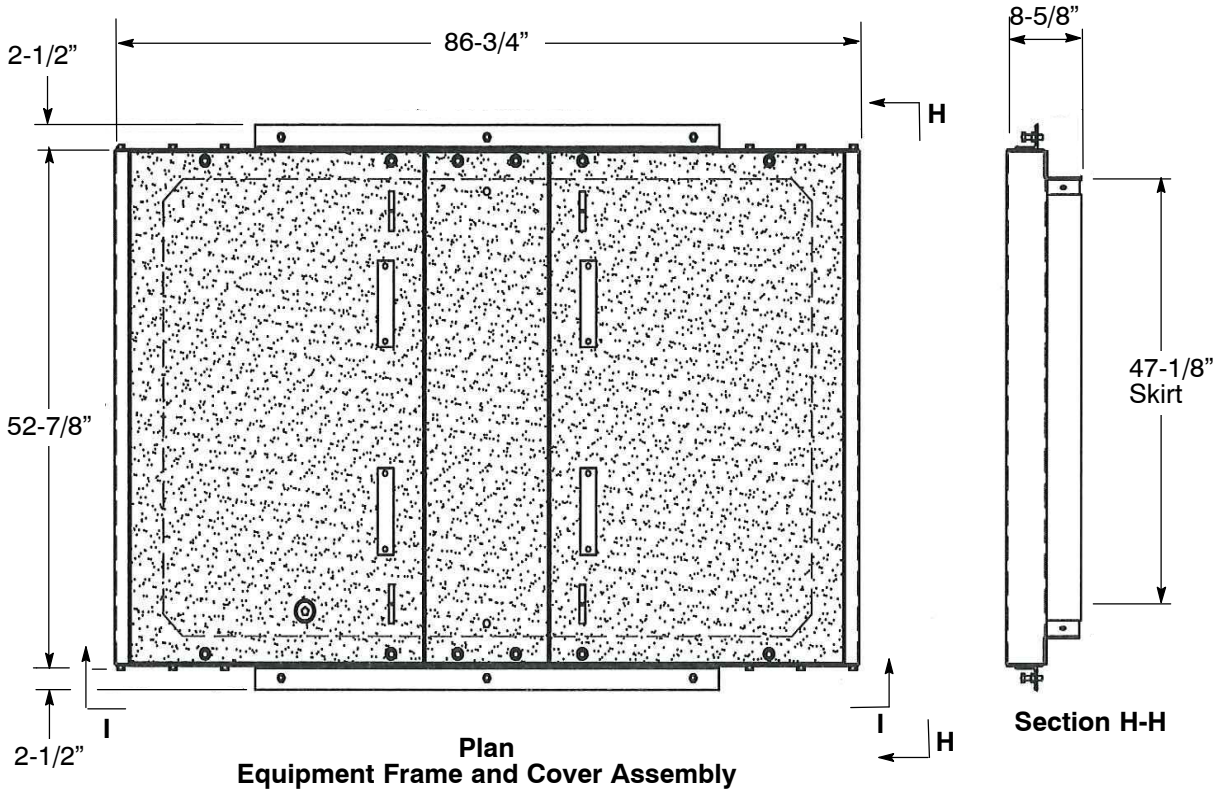

Plan
Equipment Frame and Cover Assembly

Section H-H

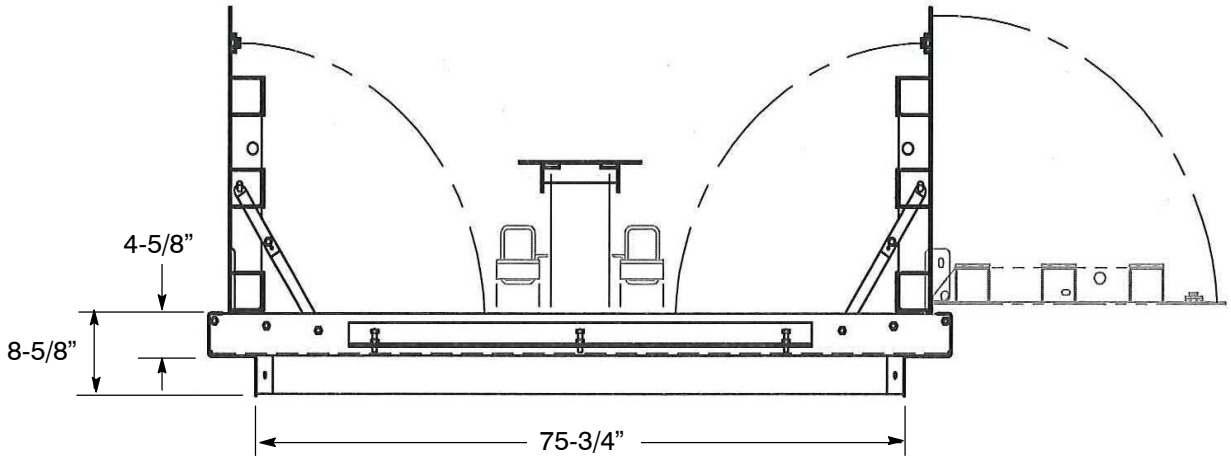

Side View (open)
Section I-I

Figure 11
4’ 0” x 6’ 6” Steel Quick-Release Cover Assembly – Full Traffic

4’ 0” x 6’ 6” (#6) Steel Quick-Release Cover Assembly – Full Traffic (continued)

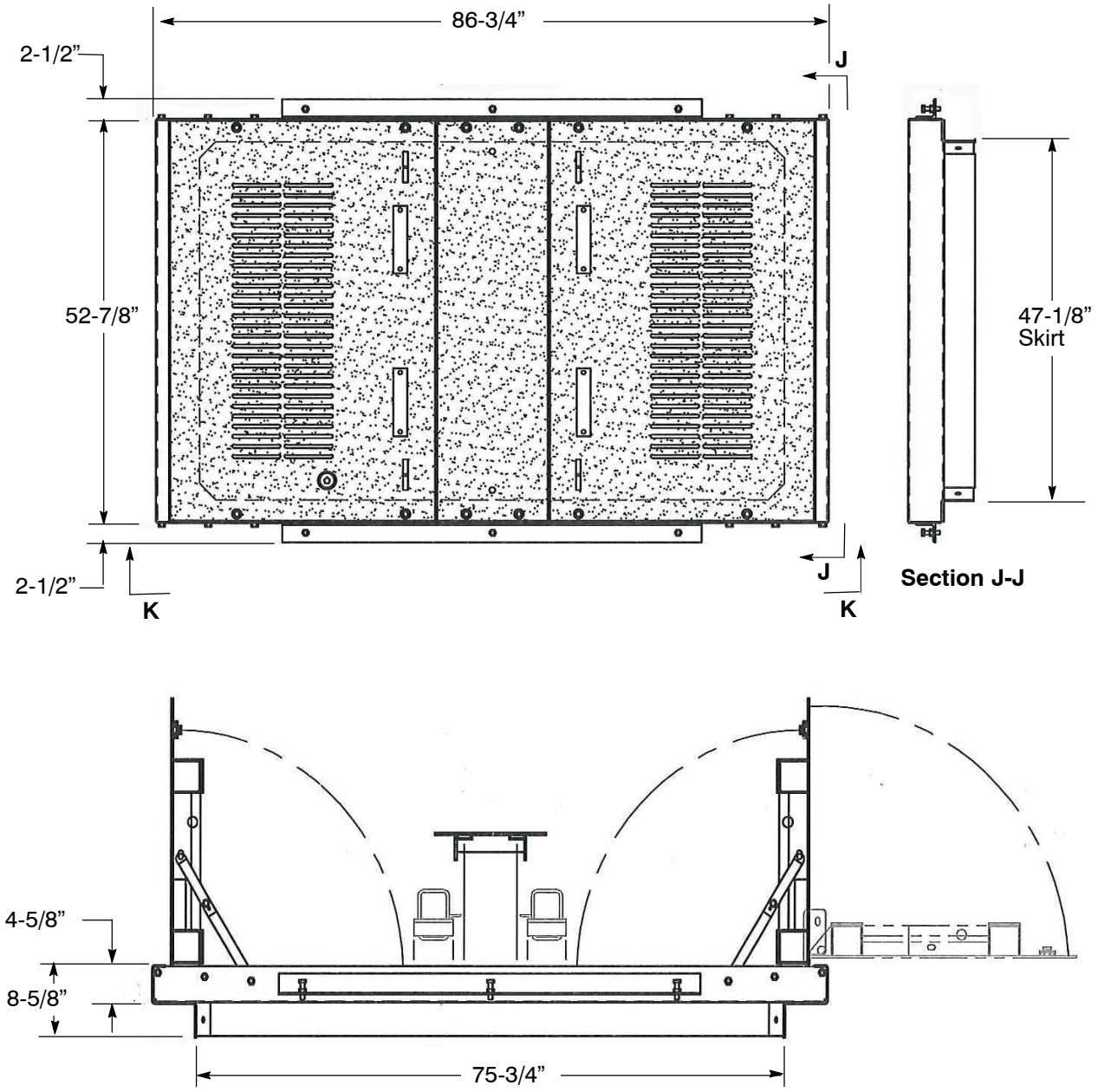

Figure 12
4’ 0” x 6’ 6” Steel Quick-Release Cover Assembly – Full Traffic

4’ 0” x 6’ 6” (#6) Heavy Full-Traffic Cover Assemblies

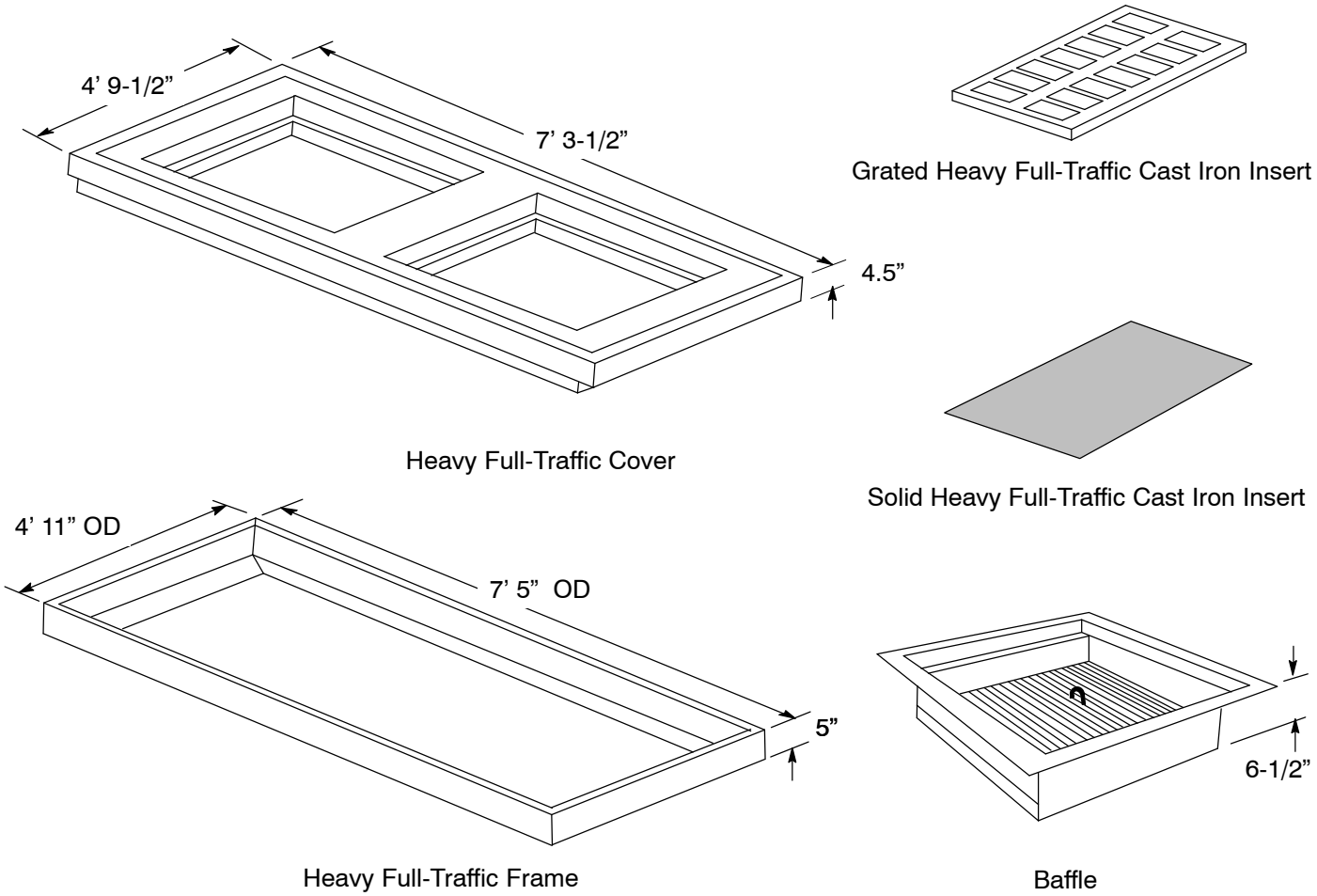

Figure 13
4’ 0” x 6’ 6” Heavy Full-Traffic Cover Assembly

Table 9 Component Parts

Description	Weight	Code
4’ 0” x 6’ 6”, HFVT Concrete Cover Without Inserts	3,835 lbs.	041926
4’ 0” x 6’ 6”, HFVT 5’ x 5’ x 1/2” Steel Frame With Adjustment Feature	339 lbs.	041927
Cast Iron Grate Inserts for Transformer Enclosures	120 lbs.	040346
Cast Iron Solid Inserts for Splice Equipment Enclosures	180 lbs.	040343
Baffle	25 lbs.	360036

Table 10 4’ 0” x 6’ 6” Cable Tail Lengths for Estimating [1]

4’ 0” x 6’ 6”	28’
Horizontal TX Enclosure (Sec. Entrance Side)	26’ Primary/ 7’ Secondary
Horizontal TX Enclosure (Opp. Sec. Entrance Side)	15’ Primary/ 15’ Secondary

[1] Cable tail length for 3’ 0” x 5” 0” and 4’ 6” x 8’ 6” enclosures are found on the Electric Design Manual under the Underground 10.10 Section, Table 10 – 4.

4’ 6” x 8’ 6” (#7) Complete Enclosure Assemblies

Notes

1. Swedge reducers are necessary with conduit smaller than 6 inches (see Document 062288).

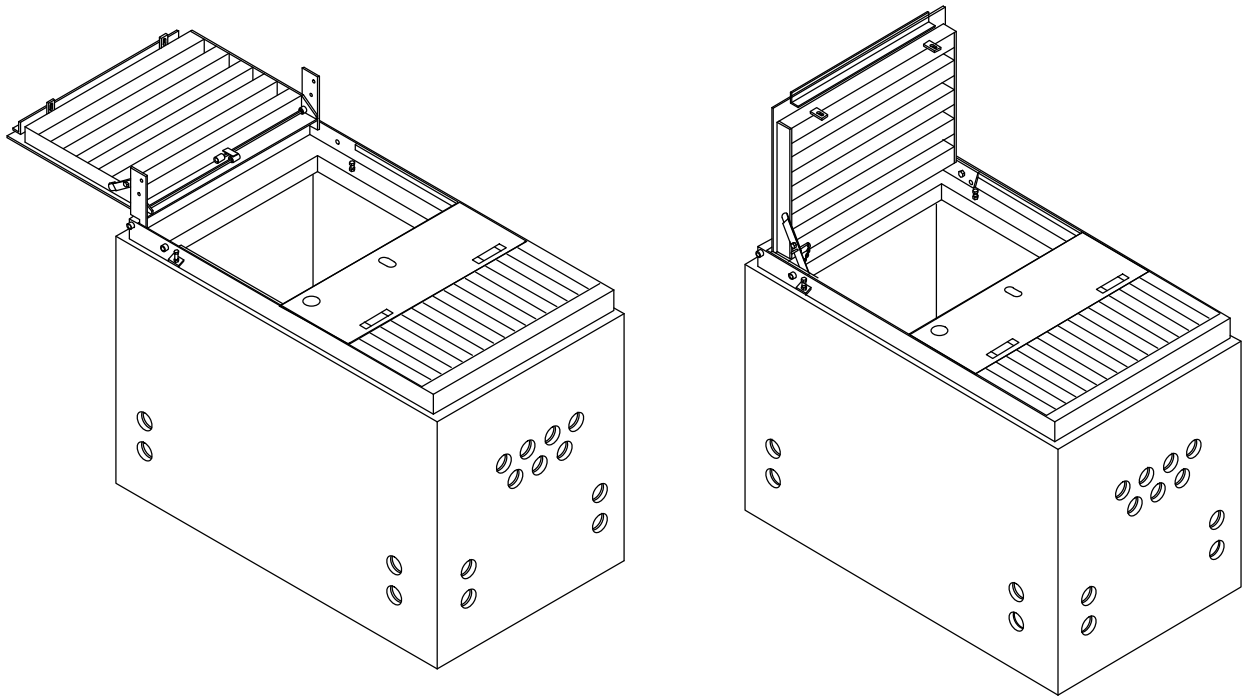

Figure 14
4’ 6” x 8’ 6” Enclosure Assembly
(not to scale)

Table 11 Complete Enclosure Assembly (for 600-amp distribution)

Application	Enclosure Size	Type of Traffic	Type of Cover	Code [1]
3∅ Duplex Transformer [2]	4’ 6” x 8’ 6” x 6’ 0”	Incidental	Quick-Release Aluminum	043371
	4’ 6” x 8’ 6” x 6’ 0”	Full-Traffic	Quick-Release Steel	041649
	4’ 6” x 8’ 6” x 7’ 0”	Heavy Full-Traffic	Concrete	041439
Equipment [3]	4’ 6” x 8’ 6” x 6’ 0”	Incidental	Quick-Release Aluminum	043411
	4’ 6” x 8’ 6” x 6’ 0”	Full-Traffic	Quick-Release Steel	041666
	4’ 6” x 8’ 6” x 7’ 0”	Heavy Full-Traffic	Concrete	041441
UCD Transformer [4]	4’ 6” x 8’ 6” x 7’ 6”	Incidental	Quick-Release Aluminum	040325
	4’ 6” x 8’ 6” x 7’ 6”	Full-Traffic	Quick-Release Steel	041662
	4’ 6” x 8’ 6” x 8’ 6”	Heavy Full-Traffic	Concrete	040324

1 Code includes body, extension (as appropriate), frame, and cover assembly. When extra depth is required, order additional extension from Table 13 on Page 19.
2 See Document 051776.
3 600-amp non-lead splices, 600-amp switches, 600-amp separable connectors.
4 112.5 through 500 kVA UCD transformers with 4-hole secondary spades will fit into existing 4’ 6” x 8’ 6” x 6’ 0” enclosures.

4’ 6” x 8’ 6” (#7) Complete Enclosure Assemblies (continued)

Table 12 Complete Frame and Cover Assembly

Type of Enclosure	Type of Traffic	Type of cover	Code
Transformer	Incidental	Quick-Release Aluminum	031830
	Full-Traffic[1]	Quick-Release Steel	041055
	Heavy Full-Traffic	Concrete	041442
Equipment	Incidental	Quick-Release Aluminum	040642
	Full-Traffic[1]	Quick-Release Steel	041054
	Heavy Full-Traffic	Concrete	041443

[1] For application guide, see Note 18 on Page 2.

4’ 6” x 8’ 6” (#7) Enclosure and Extensions

Notes

1. Do not break out sump.
2. Joints must be interchangeable with those shown in Detail B and approved by PG&E electric distribution personnel.

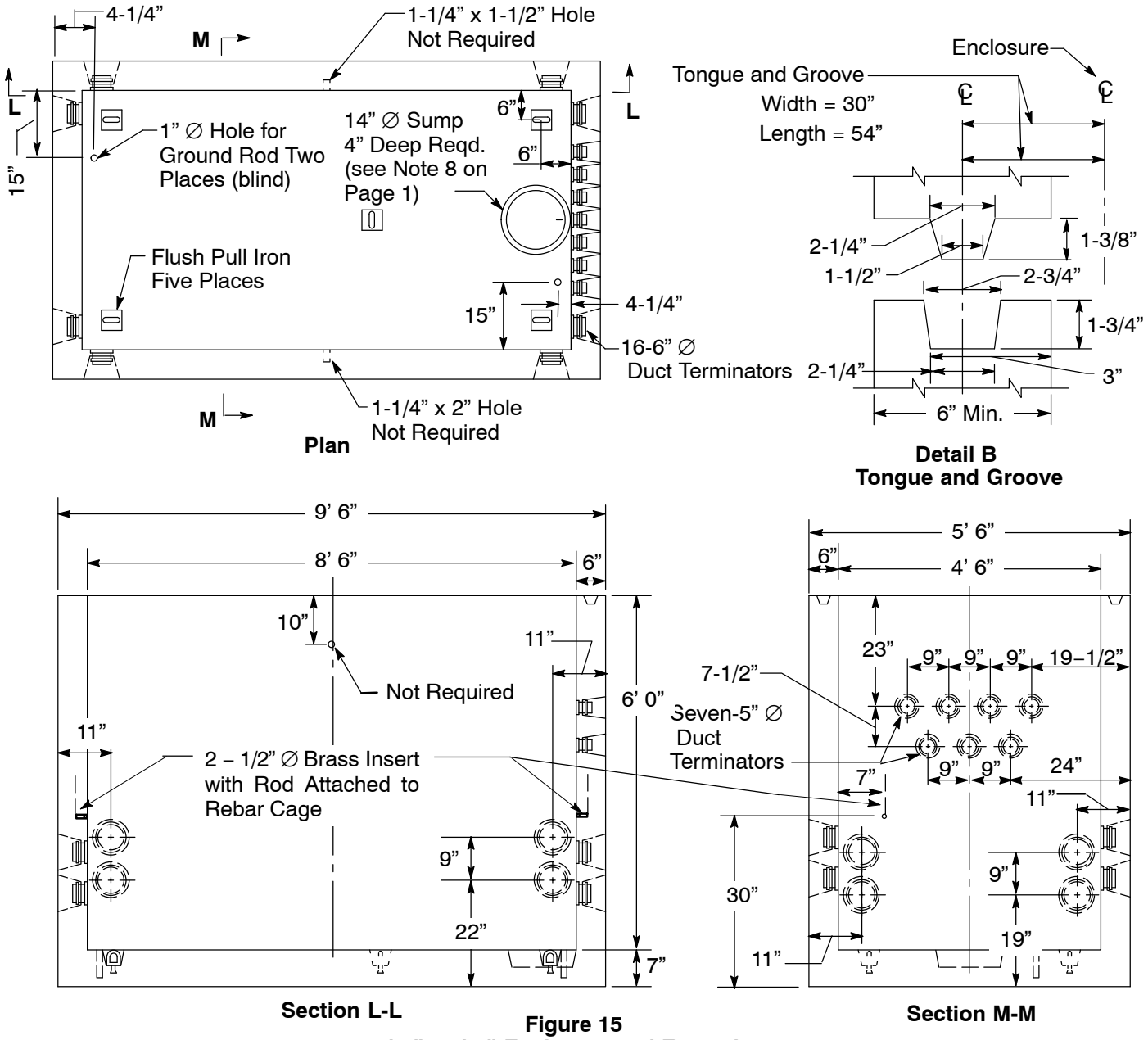

Figure 15
4’ 6” x 8’ 6” Enclosure and Extensions

Table 13 Parts for Enclosure Replacement (Figure 15)

Item	Description	Code	Weight - Approximate (lbs.)
1	Body, 72” Depth	043376	17,520
2	Extension, 6” Depth	041094	1,070
3	Extension, 12” Depth	043415	2,140
4	Extension, 18” Depth	043377	3,210

4’ 6” x 8’ 6” (#7) Aluminum Quick-Release Cover Assembly - Incidental Traffic

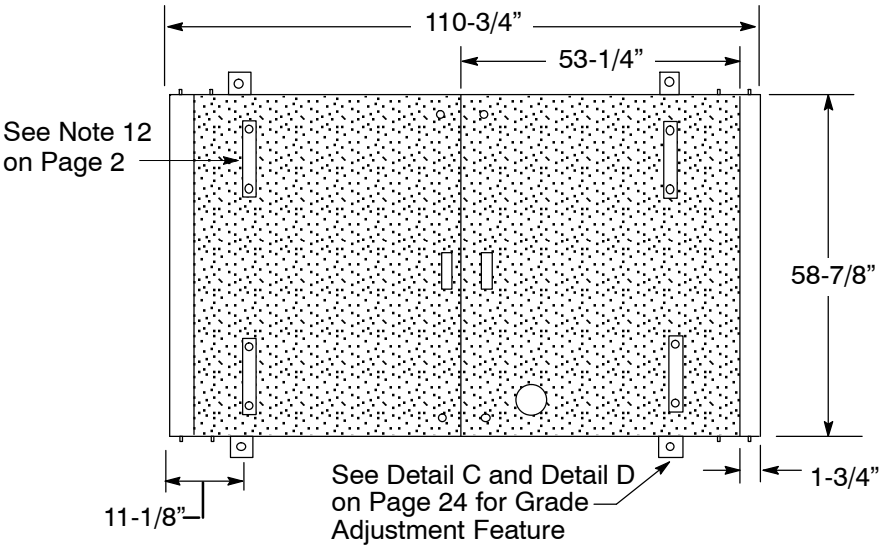

Plan
Equipment Frame and Cover Assembly

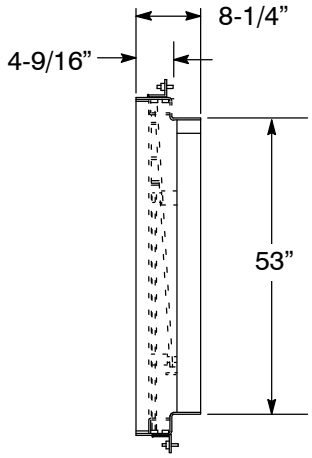

End View

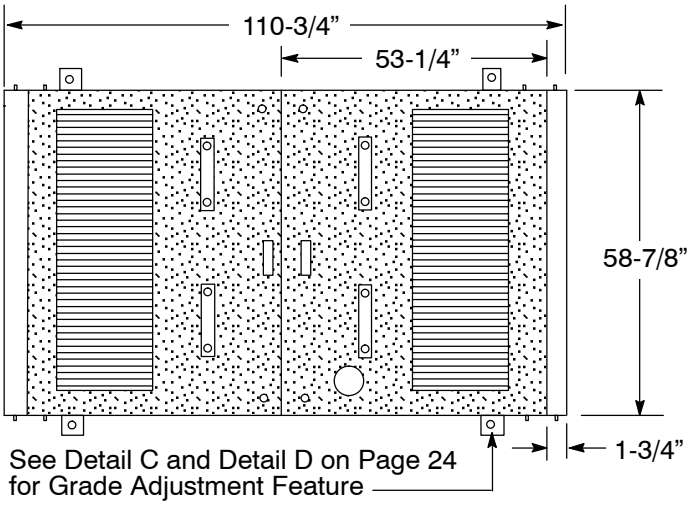

Plan
Transformer Frame and Cover Assembly

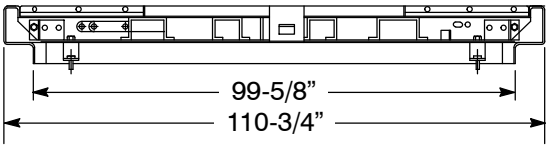

Side View (Closed)

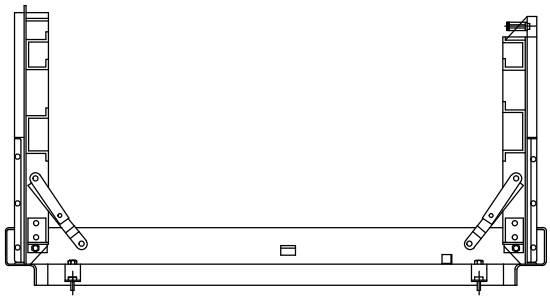

Side View (open)

Figure 16
4’ 6” x 8’ 6” Quick-Release Cover Assembly - Incidental Traffic

4’ 6” x 8’ 6”(#7) Steel Quick-Release Cover Assembly– Full Traffic

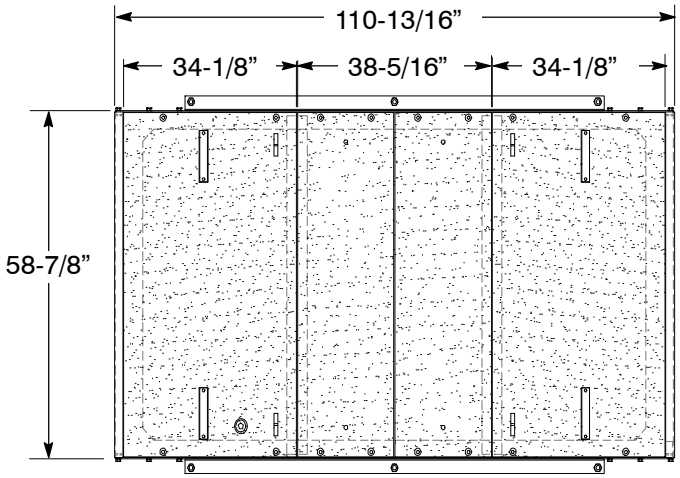

Plan
Equipment Frame and Cover Assembly

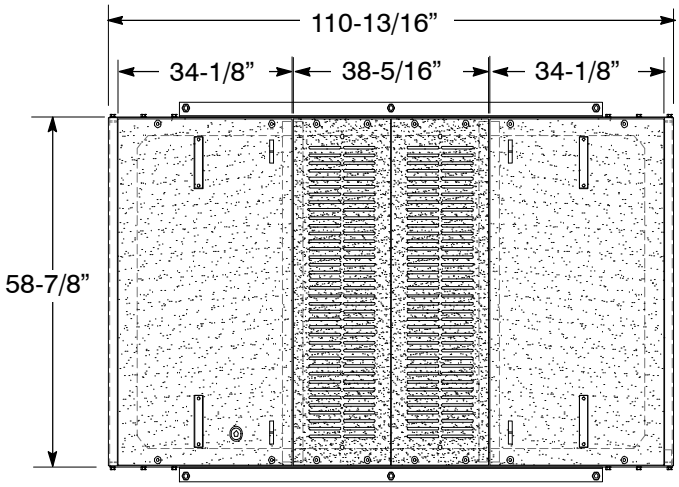

Plan
Transformer Frame and Cover Assembly

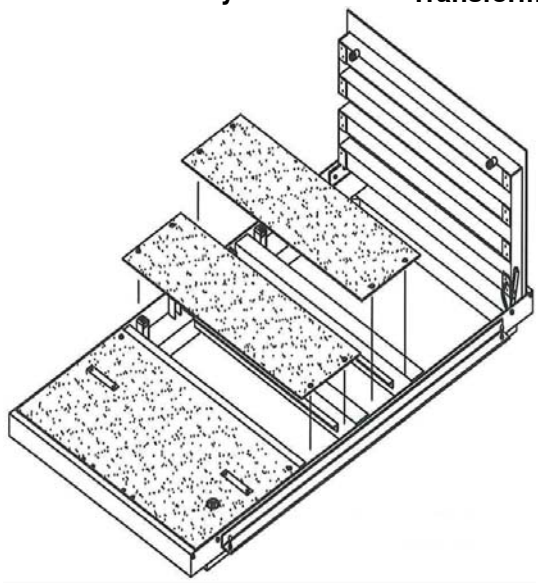

Isometric View

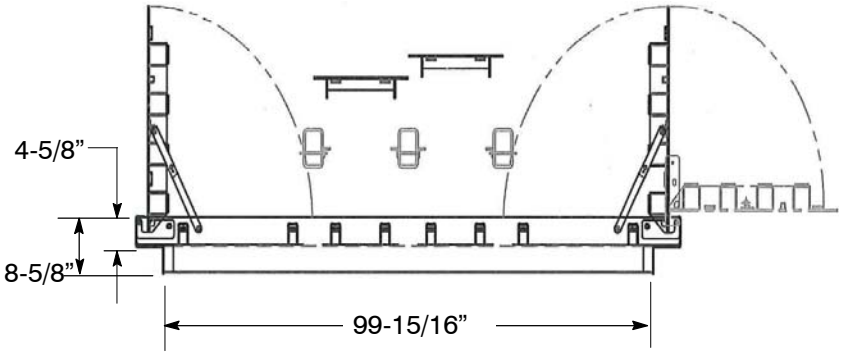

Side View

Figure 17
4’ 6” x 8’ 6” Steel Quick-Release Cover Assembly – Full Traffic

4’ 6” x 8’ 6” (#7) Heavy Full-Traffic Cover Assemblies

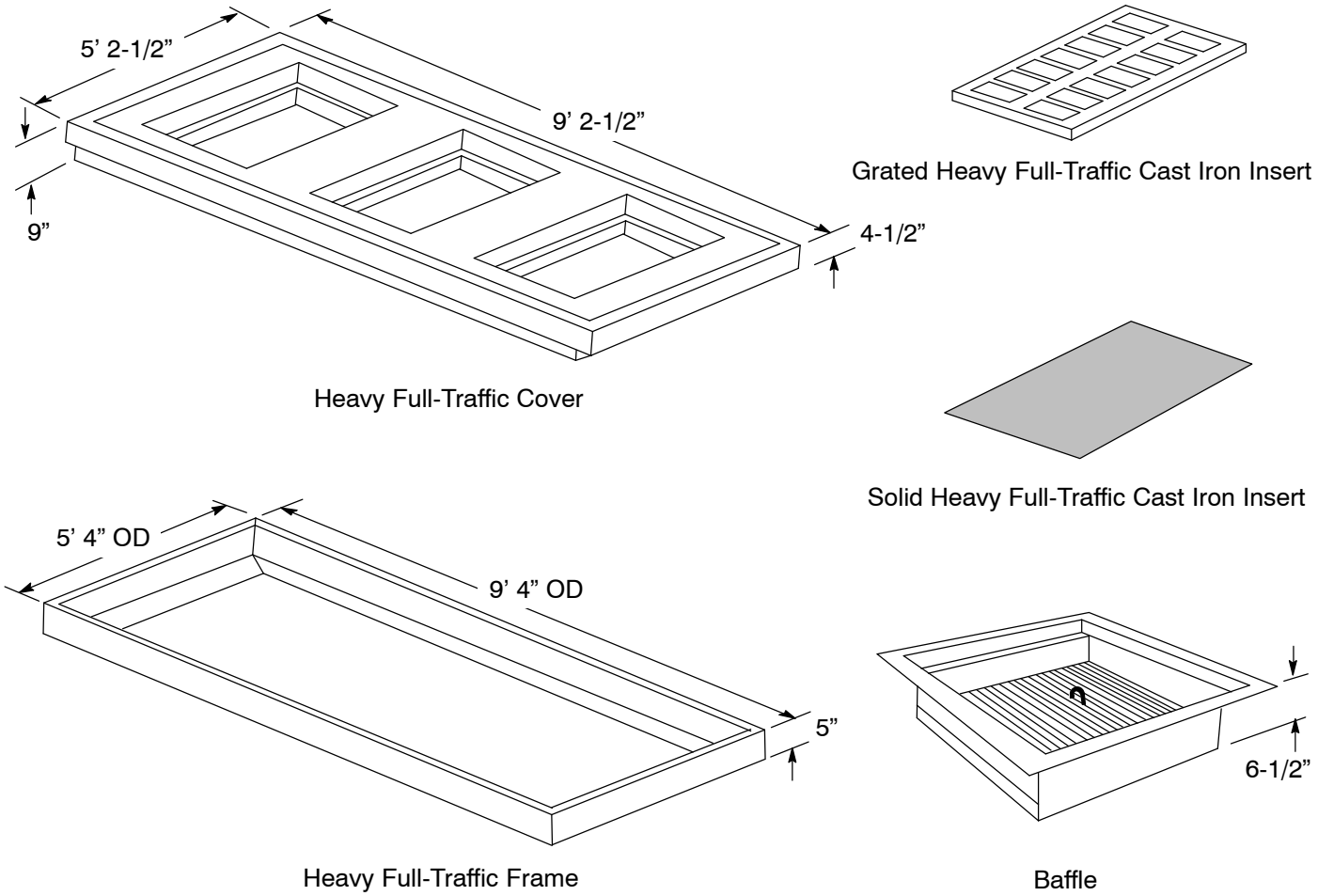

Figure 18
4’ 6” x 8’ 6” Heavy Full-Traffic Cover Assembly

Table 14 Component Parts

Description	Weight	Code
4’ 6” x 8’ 6”, HFVT Concrete Cover Without Inserts	3,840 lbs.	040340
4’ 6” x 8’ 6”, HFVT 5’ x 5’ x 1/2” Steel Frame With Adjustment Feature	450 lbs.	040341
Cast Iron Grate Inserts for Transformer Enclosures	120 lbs.	040346
Cast Iron Solid Inserts for Splice Equipment Enclosures	180 lbs.	040343
Baffle	25 lbs.	360036

Transformer Laser Cut Cover Assembly (Incidental Traffic Shown)

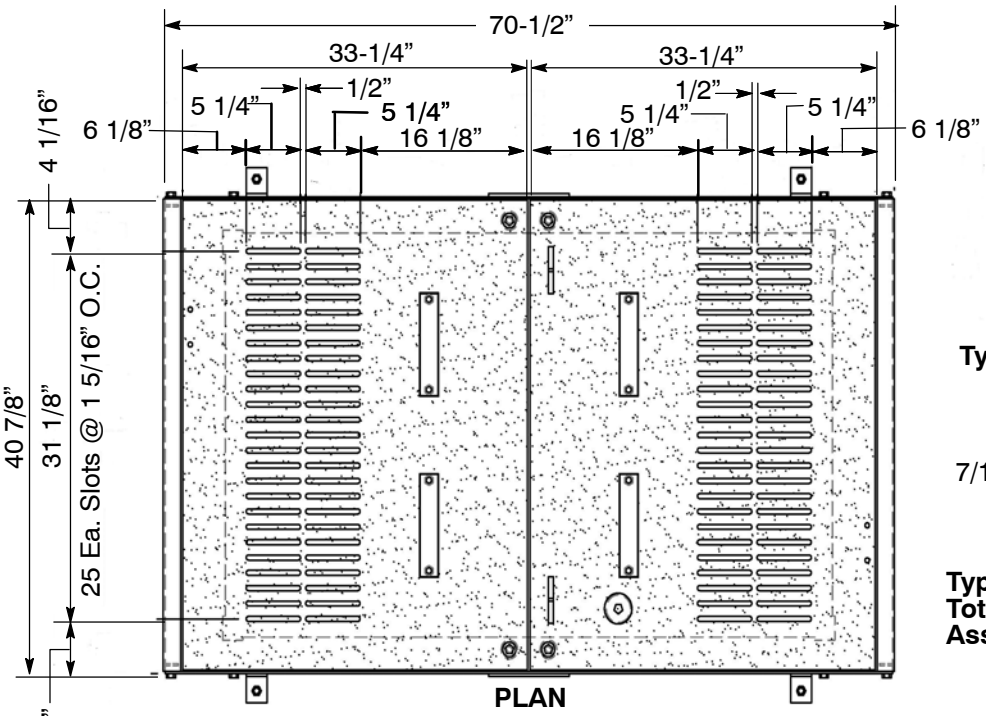

PLAN

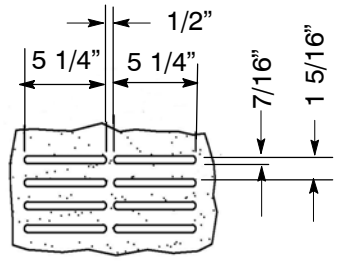

Typical Vent Slot Spacing

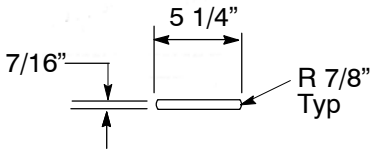

Typical Vent Slot Area = 2.26 in ^{2}
Total Open Area per Assembly = 225.6 in ^{2}

Figure 19
3’ x 5’ (#5) Transformer Assembly – Vent Slot Detail

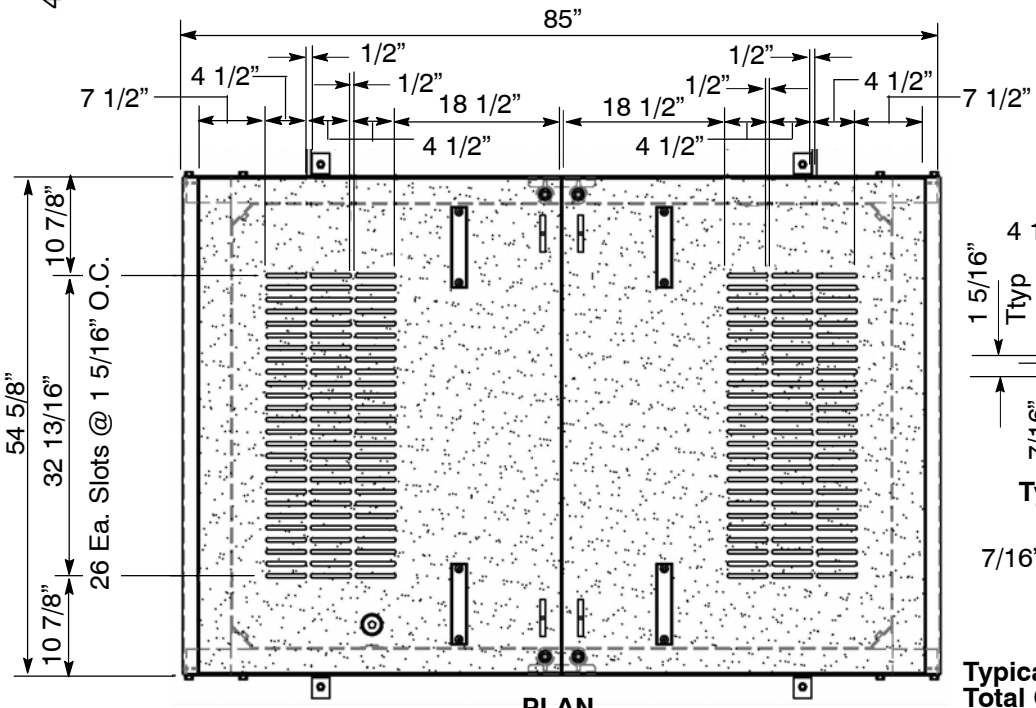

PLAN

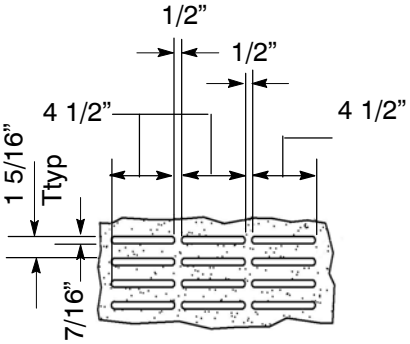

Typical Vent Slot Spacing

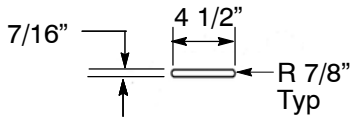

Typical Vent Slot Area = 1.93 in ^{2}
Total Open Area per Assembly = 300.7 in ^{2}

Figure 20
4’ 0” x 6’ 6” (#6) Transformer Assembly – Vent Slot Detail

Note:
Although the 4’ 0” x 6’ 6” (#6) cover has slightly different dimensions than the cover shown on Figure 10 on Page 13, this cover fits on the #6 body enclosure just as well as the cover shown on Figure 10 on Page 13.

Transformer Laser Cut Cover Assembly (continued)

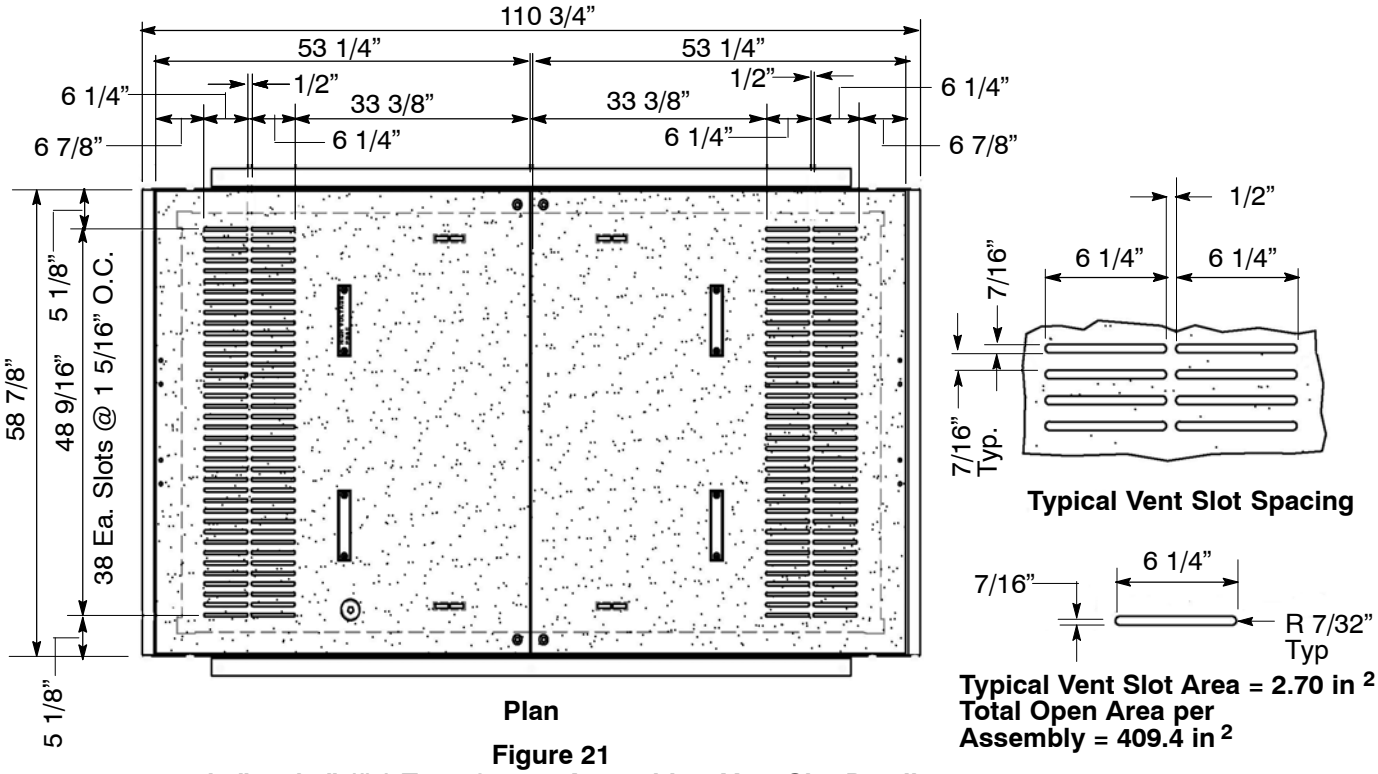

Plan

Typical Vent Slot Spacing

Typical Vent Slot Area = 2.70 in ^{2}
Total Open Area per Assembly = 409.4 in ^{2}

Figure 21
4’ 6” x 8’ 6” (#7) Transformer Assembly – Vent Slot Detail

Notes

1. Laser cut transformer quick-release cover assembly is an approved design for incidental and full-traffic cover assemblies.
2. Material codes for ordering laser cut cover assemblies are the same as the fiberglass grate insert cover assemblies. Therefore, either type of transformer quick-release cover assembly will be shipped.
3. Design complies with th Americans with Disabilities Act (ADA) Section 30.2.

Details for Frame Assemblies

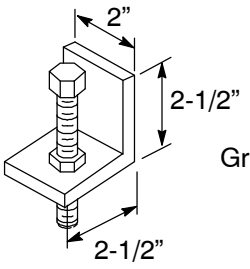

Detail C
Grade Adjusting Bolt

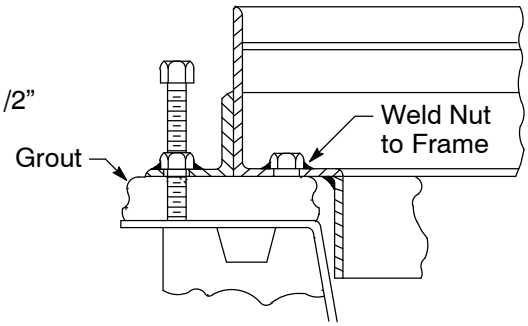

See Detail E

Detail D
Grade Adjusting Feature

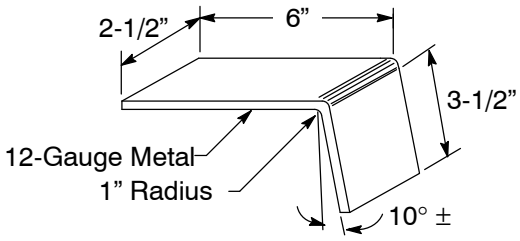

Detail E
Adjustment Bolt Support Bracket
Use M041601 Code to Order

Cement Grouting Instructions for All Enclosure Frame

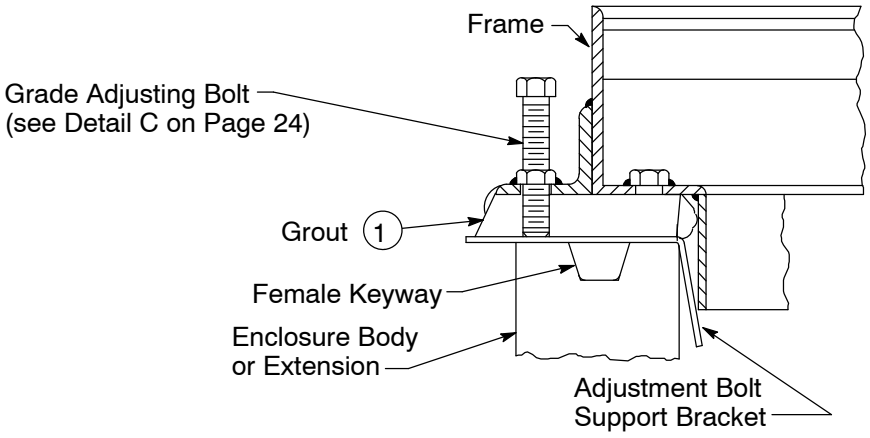

Figure 22
Grouting Incidental Enclosure Frame

Table 15 Grouting Material (structural - Figure 22)

Item	Quantity	Description	Code
1 [1]	Sack - 55 lbs.	Grout, Zero Shrink, High-Early Strength	121016

[1] One sack of grout is required for approximately each 1/2” of space between the enclosure and the frame on a 4’ 6” x 8’ 6” enclosure.

Instructions

Step 1. Thoroughly clean all surfaces of the enclosure that the grout will contact. Use clean water to remove dust from surfaces.

Step 2. Remove sufficient soil from around the enclosure to preclude accidentally mixing dirt with the grout. Install the enclosure frame and adjust it to grade.

Step 3. Saturate all grout-contact surfaces of the enclosure with water for as long as possible before grouting using wet rags laid in and around the keyway. The recommended minimum saturation time is **24 hours**. Re-saturate the keyways with water before leaving the job. Remove excess water from the female keyway just prior to grouting.

Step 4. Mix grout in a wheelbarrow with **clean** water. Do not mix more grout than can be easily used within 15 minutes. The consistency of the grout should allow it to flow under pressure.

Step 5. Install the grout directly from a shovel onto the enclosure using hands with gloves. After an adequate amount of grout has been applied, use a trowel to apply additional pressure to the grout so that all voids are filled and the grout is completely consolidated. This is necessary to ensure a full bearing surface for the frame.

Step 6. After wiping off any excess grout and making sure that all voids are filled with grout, cover the grout surface with water-saturated rags. While on the job, moisten the rags often. Re-saturate the rags with water before leaving the job. The water-saturated rags are required to cure the grout properly.

Step 7. Keep wet rags on and traffic off the enclosure for **24 hours** to allow the grout to set up properly.

Step 8. Do not backfill and tamp around the enclosure until the set-up period has concluded.

Step 9. Remove the rags before backfilling around the enclosure.

Step 10. Repair any damaged grout by repeating the above procedure.

Step 11. Ready-mix concrete (5-sack mix) is an acceptable alternate.

Revision Notes

Revision 20 has the following changes:

1. Revised Note 6 0n Page 1.
2. Modified Table 1 on Page 2. Added row for 600A – Scada Switch.
3. Corrected all material codes shown on Table 2 on Page 4.
4. Modified Figure 2 on Page 5.
5. Corrected material code for 1∅ Horizontal Transformer frame and assembly shown on Table 7 on Page 10.
6. Added ground inserts to Section C–C of Figure 8 on Page 11.
7. Corrected dimensions on Plan View and added ground inserts to Section D–D and Section E–E in Figure 8 on Page 12.
8. Corrected dimensions of Figure 10 on Page 14.
9. Added ground inserts to Section II and Section J–J of Figure 13 on Page 18.
10. Corrected dimension on Figure 19 on Page 23.
11. Added Note on Page 23.
12. Information on 3’ x 5’ transformer enclosure was moved to Document 066205.

Prepared by: ABB1

APPLICATION OF UNDERGROUND DISTRIBUTION TRANSFORMERS 062111

Asset Type:	Electric Distribution	**Function:**	Construction
Issued by:	D. H. Mulkey (DHM3)	**Date:**	07-01-14

Rev. #24: This document replaces PG&E Document 062111, Rev. #23. For a description of the changes, see Page 26.

Purpose and Scope

This document provides a convenient reference for the types of transformers that are purchasable and used for underground distribution. The available voltages and kVA ratings are indicated along with the applicable codes to facilitate ordering.

General Information

1. To conserve space and avoid overlap with other documents, the description of transformers shown has been shortened. Individual characteristics of these transformers such as dimensions, accessories, and protection can be determined by making reference to the application documents.
2. Application
   A. Single-Phase: The standard transformer for single-phase service is the Style DF-LB, single-phase, pad-mounted transformer (see Table 1 through Table 3 on Page 5). The 25 kVA through 100 kVA sizes are used for new construction. The 167 kVA size is reserved for replacement use, to solve loading or voltage problems. Where their use is required, several other types may be available with the required voltage and kVA ratings.
      (1) Chester area pad-mount transformer (see Table 4 on Page 5).
      (2) Subsurface horizontal transformer (see Table 5 and Table 6 on Page 6).
      (3) Subway-LB transformer (see Table 8 on Page 7).
   B. Three-Phase: The standard transformer for three-phase service is Style MTP, Style IIE-LB, or Style IIG pad-mount transformer (see Table 12 through Table 19 on Pages 8 through 10). Where their use is required, several other types may be available with the required voltage and kVA ratings.
      (1) Duplex-LB pad-mount transformer (see Table 9 on Page 7).
      (2) Duplex subsurface transformers (see Table 21 on Page 10).
      (3) Radial dead-front transformer (see Table 18 on Page 10).
      (4) Style IIC transformer (see Table 20 on Page 10).
      (5) Style IIH transformer (see Table 41 on Page 16).
      (6) UCD-LB transformer (see Table 22 on Page 11).
   C. "-LB" designation means that the transformer has the following characteristics:
      (1) Uses bayonet fuses.
      (2) Has backup current-limiting (CL) fuses.
      (3) Has a load-break switch between bayonet and CL fuses.
      (4) Will accommodate load-break elbows.
3. For replacement options of older style transformers, see Document 068195 for recommendations.
4. See Document 072149 for when to use pad-mount, subsurface, or vault-type transformers.
5. Each transformer code has been assigned a footnote indicating the desired use of the transformer as defined below:
   A. "1 – Current Standard Design and May Be Purchased" - these are transformers with the most current type, size, and voltage rating and are regularly purchased and used.
   B. "4 – Use for Replacement Only and May Be Purchased" - may be purchased as required for replacements. They should not be used for new construction.

C. Transformers coded with an “E” are included in emergency stock.

D. Transformers coded as 1 are available for use on new business jobs.

E. Transformers coded as 4 are to be used only when required to replace an existing installation.

6. Transformers indicated as “stainless steel” have all exterior metal parts (unless otherwise noted in the referenced documents) fabricated out of stainless steel or other material of equal or superior corrosion resistance. These units shall be used whenever a transformer is to be installed in the severe or moderate corrosion areas of Document 032911. Stainless steel units should also be used whenever local experience has determined that transformers experience accelerated corrosion leading to early replacement.

Table of Contents

	Table/Figure	Page No.
Types Suitable for New Construction		
Single-Phase:		
• Pad-Mount Style DF-LB	Table 1 – Table 3	
• Pad-Mount Chester Area	Table 4	5
• Subsurface, Horizontal	Table 5 – Table 6	6
• Subsurface, Round	Table 7	6
• Subsurface, Subway-LB	Table 8	7
Three-Phase, Pad-Mount:		
• Duplex-DF	Table 9	7
• Style MTP	Table 10 – Table 11	7
• Style IIE-LB	Table 12 – Table 17	8–9
• Radial Dead-Front	Table 18	10
• Style IIG	Table 19	10
• Style IIC	Table 20	10
Three-Phase, Subsurface:		
• Duplex	Table 21	10
• UCD-LB	Table 22	11
Specialty Transformers		
Three-Phase, Subsurface :		
• Network	Table 23 – Table 25	11
Three-Phase, Dry Type:		
• Network	Table 26 – Table 27	12
Three-Phase, Pad-Mount:		
• Network	Table 28	12
• System Tie	Table 29 – Table 30	12
• Grounding Bank	Table 31	13
• Zigzag-Radial Dead-Front	Table 32	13
Types for Replacements Only		
Single-Phase:		
• Pad-Mount Live-Front, Clam Shell	Table 33 –Table 34	13–14
• Subsurface, Round	Table 35 – Table 37	14–15
Three-Phase, Pad-Mount:		
• Style IIC	Table 38	15
• Style IIF	Table 39 – Table 40	15–16
• Style IIH	Table 41	16
• Radial, Dead-Front	Table 42	16
• Radial, Live-Front	Table 43 – Table 44	17
Three-Phase, Subsurface Vault	Table 45	17
Transformer Winding Designations	Table 46 – Table 47	18–19
Transformer Insulating Fluid	Table 48	19
System Primary Voltages	Table 49	20
Pictorial Index	Figure 1 – Figure 6	21–26

References	Location	Document
Cabinet and Transformer for Single-Phase 12 kV Pad-Mounted Transformer Installation Underground Residential Areas	ELS	032732
Corrosion Area-Overhead Lines	OH: General/EPM	032911
Requirements for Conventional Three-Phase Small Power Transformers	ELS	033705
Single-Phase, Subsurface, Round Transformers	UG-1: Transformers	035313
Underground Commercial Distribution, Three-Phase, Subsurface Transformer	UG-1: Transformers	039830
Live-Front, Low-Profile, Single-Phase, Pad-Mounted Transformers	UG-1: Transformers	042761
Cabinet and Transformer for Low-Profile, Single-Phase, 6.9 kV Pad-Mounted Transformer Installation Underground Residential Systems	ELS	042764
Radial, Three-Phase, Pad–Mounted Transformers	UG-1: Transformers	043816
Loop-Style, Three-Phase, Pad-Mounted Transformers	UG-1: Transformers	045290
Pad-Mounted Network Transformer	UG-2: Transformers	045774
Open Wye to Zigzag Wye Transformation Equipment and Connection	UG-1: Transformers	045786
Three-Phase, Pad-Mounted Autotransformer	UG-1: Transformers/EPM	051119
Duplex-Type, Three-Phase, Subsurface Transformer	UG-1: Transformers	051776
Horizontal, Single-Phase, Subsurface Transformers	UG-1: Transformers	060578
Pad-Mounted Ground Fault Sensing for Cogeneration	UG-1: General	062264
Single-Phase, Dead-Front, and Duplex, Pad-Mounted Transformer	UG-1: Transformers	064307
4 kV Circuit Supply	UG-1: Transformers	068184
Distribution Transformer Replacement Options	UG-1: Transformers/EDM	068195
Three-Phase Subsurface Network Transformers	UG-2: Transformers	072137
Three-Phase Subsurface Vault Transformers	UG-2: Transformers	072138
Single-Phase Subway Transformers	UG-2: Transformers	072139
Pad-Mount Transformers-Style IIG and Style IIH	UG-1: Transformers	072146
Selection of the Type of Underground Equipment	UG-1: Transformers/Greenbook	072149
Engineering Material Specification #86, “Single-Phase, and Three-Phase Pad-Mounted Distribution Transformers”	TIL	EMS 86
Engineering Material Specification 91, “Single-Phase and Three-Phase Subsurface Distribution Transformers	TIL	EMS 91

Single-Phase, Pad-Mount, for New Construction

Table 1 Codes for Style DF-LB, 1-Wire (2-Bushing) No Loop Switches With Transformer Switch With 2 Primary Bushings and 3 Secondary Bushings Including the Insulated Neutral (reference Document 064307 and Spec. 86) – Self-Protected

kVA	20,780GRDY/12,000	
	240/120 V	
	Mild Steel	Stainless Steel
25	261501 [1]	262890 [1]
50	261502 [1]	262891 [1]
100	261503 [1]	262892 [1]
167	261504 [4, E]	262893 [4, E]

Table 2 Codes for Style DF-LB, 2-Wire, (4-Bushing) No Loop Switches With Transformer Switch With 4 Primary Bushings and 3 Secondary Bushings Including the Insulated Neutral (reference Document 064307 and Spec. 86) – Self-Protected

kVA	12,000/20,780GrdY		17,200	20,780
	240/120 V		240/120 V	240/120 V
	Mild Steel	Stainless	Mild Steel	Mild Steel
25	261507 [1]	261519 [1]	261511 [1]	261515 [1]
50	261508 [1]	261520 [1]	261512 [1]	261516 [1]
100	261509 [1]	261521 [1]	261513 [1]	261517 [1]
167	261510 [4]	261522 [4, E]	261514 [4, E]	261518 [4, E]

Table 3 Codes for Style DF-LB, 3-Wire, (6-Bushing) No Loop Switches With Transformer Switch and With 6 Primary Bushings and 3 Secondary Bushings Including the Insulated Neutral (reference Document 064307 and Spec. 86) – Self-Protected

kVA	2,400/ 4,160GrdY	4,160 x 12,000		12,000/ 20,780GrdY			17,200	20,780	
	240/120 V	240/120 V		240/120 V		480/240 V	240/120 V	240/120 V	
	Mild Steel	Mild Steel	Stainless	Mild Steel	Stainless	Mild Steel	Mild Steel	Mild Steel	Stainless
25	–	–	–	261531 [1]	261543 [1]	262721 [1, E]	261535 [1]	261539 [1]	262894 [1]
50	–	–	–	261532 [1]	261544 [1]	–	261536 [1]	261540 [1]	262895 [1]
100	262043 [1, E]	261785 [1]	261988 [1, E]	261533 [1]	261545 [1]	–	261537 [1]	261541 [1]	262896 [1]
167	–	–	–	261534 [4]	261546 [4, E]	–	261538 [4, E]	261542 [4, E]	262897 [4, E]

Table 4 Codes for Chester Style Specialty Transformers - Single-Phase, Pad-Mount, Load-Break, Dead-Front With Single-Phase Cabinet for Use in the Chester, CA Area. With 2 Primary Bushings and 3 Secondary Bushings Including the Insulated Neutral (see ANSI/IEEE Type 2(a) per IEEE C57.12.25) – Self-Protected

kVA	12,470GrdY/7,200 – 240/120 V
	Mild Steel
50	017414 [1, E]
100	–

[1] Current standard design and may be purchased.

[4] Use for replacement only and may be purchased.
[E] Included in Emergency Stock

Single-Phase, Subsurface, for New Construction

Table 5 Codes for Subsurface Horizontal, Single-Phase With 4 Primary Bushings With 2 (25-50 kVA) or 4 (75-167 kVA) Hot Secondary Leads. Neutral Lead May Be Permanently Grounded. (reference Document 060578 and Spec. 91) – Self-Protected, Stainless Steel

kVA	12,000/20,780GrdY 240/120 V		17,200 240/120 V	20,780 240/120 V	
	No Switch	With Single-Phase Switch	No Switch	No Switch	With Single-Phase Switch
25	262389 [1]	–	262395 [1]	262436 [1]	–
50	262391 [1]	–	262396 [1]	262437 [1, E]	–
100	262393 [1, E]	013884 [1, E]	262397 [1]	262438 [1, E]	262439 [1, E]
167	262394 [4, E]	262181 [4, E]	262398 [4, E]	263050 [4 E]	–

Table 6 Codes for Subsurface Horizontal, Single-Phase With 6 Primary Bushings With 2 (25-50 kVA) or 4 (75–167 kVA) Hot Secondary Leads. Neutral Lead May Be Permanently Grounded. (reference Document 060578 and Spec. 91) – Self-Protected, Stainless Steel

kVA	12,000/20,780GrdY 240/120 V		17,200 – 240/120 V		20,780 – 240/120 V	
	No Switch	With Three-Phase Switch	No Switch	With Three-Phase Switch	No Switch	With Three-Phase Switch
25	260328 [1]	027264 [1, E]	261106 [1]	–	261102 [1]	–
50	260668 [1, E]	–	261107 [1, E]	–	261103 [1, E]	–
100	260882 [1, E]	027266 [1, E]	261108 [1]	027269 [1, E]	261104 [1, E]	027267 [1, E]
167	261000 [4, E]	–	261109 [4, E]	–	261105 [4, E]	–

Table 7 Codes for Subsurface Round, Single-Phase With 3 Secondary Bushings, Neutral May be Permanently Grounded. Use to Supply Single-Phase Load. (reference Document 035313 and Spec. 91) – Self-Protected, Stainless Steel

kVA	4160/7200Y 240/120 V 4 Primary Bushings	4,160GrdY/2,400 240/120 V 2 Primary Bushings	
	No Switch	No Switch	With Single-Phase Switch
100	262371 [1, E]	262120 [1, E]	262143 [1, E]

(See Table 36 on Page 14 for other single-phase round transformers.)

[1] Current standard design and may be purchased.

[4] Use for replacement only and may be purchased.
[E] Included in Emergency Stock

Single-Phase, Subsurface, for New Construction (continued)

Table 8 Codes for Subsurface Subway-LB, Single-Phase, (reference Document 072139 and Spec. 91) – Self-Protected, Stainless Steel

kVA	2,400/4,160Y-120/240 3 Primary Bushings 4 Secondary Bushings	12,000/20,780Y – 120/240	
		2 Primary Bushings 4 Secondary Bushings	3 Primary Bushings 4 Secondary Bushings
50	261388 [1, E]	261384 [1]	261391 [1]
100	261389 [1]	261385 [1, E]	261392 [1, E]
167	261390 [1, E]	261386 [1]	261393 [1]
250	–	261387 [1, E]	261394 [1, E]

Three-Phase, Pad-Mount, for New Construction

Table 9 Codes for Duplex-Style DF, Three-Phase, Pad-Mount, No Loop Switch, With Transformer Switch With 6 Primary Bushings and 4 Secondary Bushings Including the Insulated Neutral (reference Document 064307 and Spec. 86) – Self-Protected

kVA	12,000/20,780GrdY/12,000		17,200	20,780
	240/120 V		240/120 V	240/120 V
	Mild Steel	Stainless	Mild Steel	Mild Steel
25/10	261547 [1]	–	261551 [1]	–
50/10	261548 [1, E]	262047 [1, E]	261552 [1, E]	261914 [1, E]
100/25	261549 [1]	–	261553 [1]	–
100/50	261550 [1, E]	262049 [1, E]	261554 [1, E]	261915 [1, E]

Table 10 Codes for Style MTP, Three-Phase, Pad-Mount With 6 Primary Bushings and 4 Secondary Bushings Including the Insulated Neutral (reference Document 045290 and Spec. 86) – Self-Protected

kVA	12,000/20,780GrdY/12,000				20,780	
	208Y/120 V		480Y/277 V		208Y120 V	480Y277 V
	Mild Steel	Stainless	Mild Steel	Stainless	Mild Steel	
45	261897 [1]	261909 [1]	261898 [1]	261910 [1]	261905 [1]	261906 [1]
150	261899 [1]	261911 [1, E]	261900 [1]	261912 [1, E]	261907 [1, E]	261908 [1, E]

Table 11 Codes for Style MTP, Three-Phase, Pad-Mount With 6 Primary Bushings and 4 Secondary Bushings Including the Insulated Neutral (reference Document 045290 and Spec. 86) – Self-Protected

kVA	4,160		17,200	
	208Y/120 V	480Y/277 V	208Y/120 V	480Y/277 V
	Mild Steel		Mild Steel	
45	–	–	261901 [1]	261902 [1]
150	262782 [1, E]	262783 [1, E]	261903 [1, E]	261904 [1, E]

[1] Current standard design and may be purchased.

[4] Use for replacement only and may be purchased.
[E] Included in Emergency Stock

Three-Phase, Pad-Mount, for New Construction (continued)

Table 12 Codes for Style IIE-LB, No Loop Switches, With Transformer Switch With 6 Primary Bushings and 4 Secondary Bushings Including the Insulated Neutral (reference Document 045290 and Spec. 86) – Self-Protected

kVA	4,160 x 12,000	
	208Y/120 V	480Y/277 V
	Mild Steel	Mild Steel
75	261397 [1]	261401 [1]
150	261398 [1]	261402 [1]
300	261399 [1, E]	261403 [1, E]
750	261400 [1, E]	261404 [1, E]

Table 13 Codes for Style IIE-LB, No Loop Switches, With Transformer Switch With 6 Primary Bushings and 4 Secondary Bushings Including the Insulated Neutral (reference Document 045290 and Spec. 86) (continued) – Self-Protected

kVA	12,000/20,780GrdY/12,000						12,000/20,780Y12,000	
	208Y/120 V		480Y/277 V		2,400/4,160Y/2,400 V		240/120 Delta	
	Mild Steel	Stainless	Mild Steel	Stainless	Mild Steel	Stainless	Mild Steel	Stainless
75	261405 [1]	261443 [1]	261410 [1]	261446 [1]	–	–	–	–
150	261406 [1]	–	261411 [1]	–	–	–	261421 [1]	–
300	261407 [1]	261444 [1, E]	261412 [1]	261447 [1, E]	–	–	261422 [1]	262645 [1, E]
750	261408 [1]	–	261413 [1]	–	261417 [1]	–	–	–
1,000	261409 [1]	261445 [1, E]	261414 [1]	261448 [1, E]	261418 [1]	261450 [1]	–	–
1,500	–	–	261415 [1]	–	261419 [1]	–	–	–
2,500	–	–	261416 [1]	261449 [1, E]	261420 [1]	261451 [1, E]	–	–

Table 14 Codes for Style IIE-LB, No Loop Switches, With Transformer Switch With 6 Primary Bushings and 4 Secondary Bushings Including the Insulated Neutral (reference Document 045290 and Spec. 86) (continued) – Self-Protected

kVA	17,200		
	208Y/120 V	480Y/277 V	2,400/4,160Y/2,400 V
	Mild Steel	Mild Steel	Mild Steel
75	261423 [1]	261428 [1]	–
150	261424 [1, E]	261429 [1, E]	–
300	261425 [1]	261430 [1]	–
750	261426 [1, E]	261431 [1, E]	261435 [1, E]
1,000	261427 [1, E]	261432 [1]	–
1,500	–	261433 [1, E]	–
2,500	–	261434 [1, E]	261436 [1, E]

[1] Current standard design and may be purchased.

[4] Use for replacement only and may be purchased.
[E] Included in Emergency Stock

Three-Phase, Pad-Mount, for New Construction (continued)

Table 15 Codes for Style IIE-LB, No Loop Switches, With Transformer Switch With 6 Primary Bushings and 4 Secondary Bushings Including the Insulated Neutral (reference Document 045290 and Spec. 86) (continued) – Self-Protected

kVA	20,780			
	208Y/120 V		480Y/277 V	
	Mild Steel	Stainless	Mild Steel	Stainless
75	261437 [1]	261452 [1]	261440 [1]	261454 [1]
150	261438 [1]	–	261441 [1]	–
300	261439 [1]	261453 [1, E]	261442 [1]	261455 [1, E]

Table 16 Codes for Style IIE-LB, With Three-Phase Loop Switches, With Transformer Switch With 6 Primary Bushings and 4 Secondary Bushings Including the Insulated Neutral (reference Document 045290 and Spec. 86) – Self-Protected

kVA	12,000/20,780GrdY/12,000			
	208Y/120 V		480Y/277 V	
	Mild Steel	Stainless	Mild Steel	Stainless
75	261456 [1]	–	261459 [1]	–
300	261457 [1, E]	–	261460 [1, E]	–
1,000	261458 [1]	261472 [1, E]	261461 [1]	261473 [1, E]
1,500	–	–	261893 [1]	–
2,500	–	–	261894 [1]	261895 [1, E]

Table 17 Codes for Style IIE-LB, With Three-Phase Loop Switches, With Transformer Switch With 6 Primary Bushings and 4 Secondary Bushings Including the Insulated Neutral (reference Document 045290 and Spec. 86) (continued) – Self-Protected

kVA	17,200		20,780	
	208Y/120 V	480Y/277 V	208Y/120 V	480Y/277 V
	Mild Steel	Mild Steel	Mild Steel	Mild Steel
75	261462 [1]	261465 [1]	261468 [1]	261470 [1]
300	261463 [1, E]	261466 [1, E]	261469 [1, E]	261471 [1, E]
1,000	261464 [1, E]	261467 [1, E]	–	–
2,500	–	261896 [1, E]	–	–

[1] Current standard design and may be purchased.

[4] Use for replacement only and may be purchased.
[E] Included in Emergency Stock

Three-Phase, Pad-Mount, for New Construction (continued)

Table 18 Codes for Radial Dead-Front, Three-Phase, Pad-Mount With 3 Primary Bushings and 4 Secondary Bushings Including the Insulated Neutral (reference Document 043816 and Spec. 86) – Conventional

kVA	20,780			
	208Y/120 V		480Y/277 V	
	Mild Steel	Stainless	Mild Steel	Stainless
750	–	–	263031 [1, E]	–
1,000	263029 [1]	261523 [1, E]	–	261524 [1]
1,500	–	–	263033 [1]	–
2,500	–	–	263035 [1]	261525 [1, E]

(See Table 42 on Page 16 for other three-phase radial DF.)

Table 19 Codes for Style IIG, Three-Phase, Pad-Mount With Vacuum Fault Interrupter, With 6 Primary Bushings, 4 Secondary Bushings Including Insulated Neutral With Stainless Steel Cabinet and FR3 Insulating Fluid (reference Document 072146 and Spec. 86)

kVA	12,000/20,780Grd/12,000		12,000/20,780Grd/12,000	17,200		20,780
	480Y/277		2,400/4160Y/2,400	480Y/277	2,400/4160Y/ 2,400	480Y/277
kVA	No Loop Switch	With 2 Loop Switches	No Switch	No Loop Switch		
2955/3325	262702 [1, E]	262703 [1, E]	262704 [1, E]	262705 [1, E]	262706 [1, E]	262707 [1, E]

Table 20 Codes for Style IIC, Three-Phase, Pad-Mount With 3 Primary Bushings and 4 Secondary Bushings Including the Insulated Neutral (reference Document 045290 and Spec. 86) – Self-Protected

kVA 1,500	4,160 x 12,000	
	208Y/120 V	480Y/277 V
	Mild Steel	Mild Steel
1,500	–	260789 [1]
2,500	–	260791 [1, E]

(See Table 38 on Page 15 for other Style IIC.)

Three-Phase, Subsurface, for New Construction

Table 21 Codes for Subsurface Duplex, Three-Phase With 6 Primary Bushings and 3 Hot Secondary Leads or Insulated Spades. The Neutral is a Welded Spade. (reference Document 051776 and Spec. 91) – Self-Protected, Stainless Steel

kVA	12,000/20,780GrdY/12,000 – 240/120 V		17,200 – 240/120 V	
	No Switch	With Three-Phase Switch	No Switch	With Three-Phase Switch
25/10	262122 [1]	262131 [1]	262349 [1]	262348 [1]
50/10	262128 [1, E]	262132 [1, E]	262350 [1, E]	262354 [1]
75/15	–	262133 [1]	–	262355 [1]
100/25	262130 [1]	262134 [1]	262352 [1]	262356 [1, E]
100/50	262363 [1, E]	262318 [1, E]	262353 [1, E]	262357 [1, E]

[1] Current standard design and may be purchased.

[4] Use for replacement only and may be purchased.

[E] Included in Emergency Stock

Three-Phase, Subsurface, for New Construction (continued)

Table 22 Codes for Subsurface UCD-LB, Three-Phase With Two, Three-Phase Loop Switches and With Transformer Switches With 6 Primary Bushings and 3 Hot Secondary Bushings. The Neutral May Be Permanently Grounded. (reference Document 039830 and Spec. 91) – Self-Protected, Stainless Steel

kVA	4,160 x 12,000		12,000/20,780GrdY/12,000		17,200	
	208Y/120 V	480Y/277	208Y/120	480Y/277	208Y/120	480Y/277
150	261798 [1]	261800 [1]	261802 [1]	261806 [1]	261810 [1]	261813 [1]
300	261799 [1, E]	261801 [1, E]	261803 [1, E]	261807 [1, E]	261811 [1]	261814 [1]
750	262327 [1, E]	262332 [1, E]	261804 [1]	261808 [1]	261812 [1, E]	261815 [1, E]
1,000	–	–	261805 [1, E]	261809 [1, E]	–	–

Specialty Transformers

Table 23 Codes for Subsurface Network, Three-Phase With 3 Primary Bushings and 3 Secondary Bushings With No Ground Switch, No Termination Chamber (reference Document 072137 and Spec. 91) – Conventional, Plate Steel

kVA	12,000 – 208Y/120 V	12,000 – 480Y/277 V	12,000X34,500GrdY/19920 480Y/277 V	34,500GrdY/19,920 480Y/277 V
300	262664 [1]	–	–	–
500	262665 [1]	–	–	–
750	262666 [1]	262667 [1, T]	262673 [1]	262671 [1]
1,000	–	262668 [1, T]	262674 [1]	262662 [1]
1,500	–	262669 [1, T]	262675 [1]	262672 [1]
2,000	–	262670 [1, T]	262676 [1]	262663 [1]

Table 24 Codes for Subsurface Network, Three-Phase With 3 Primary Bushings and 3 Secondary Bushings With Ground Switch and Termination Chamber (reference Document 072137 and Spec. 91) – Conventional, Plate Steel

kVA	12,000 – 208Y/120 V	12,000 – 480Y/277 V	12,000X34,500GrdY/19920 480Y/277 V	34,500GrdY/19,920 480Y/277 V
300	262407 [4]	–	–	–
500	262408 [4]	262410 [4, T]	–	–
750	262409 [4, E]	262411 [4, T]	262419 [4]	262415 [4]
1,000	–	262412 [4, E, T]	262420 [4]	262416 [4]
1,500	–	262413 [4, T]	262421 [4]	262417 [4]
2,000	–	262414 [4, T]	262422 [4, E]	262418 [4]

Table 25 Codes for Subsurface Vault, Three-Phase with 3 Primary Bushings and 3 Secondary 600A ESNA Bushings (Spec. 91).

kVA	12,000 x 34,500GrdY/19,920 – 4,160Y/2400 V
2,000	262889 [1]

[1] Current standard design and may be purchased.

[4] Use for replacement only and may be purchased.
[E] Included in Emergency Stock
[T] With high voltage taps.

Specialty Transformers (continued)

Table 26 Codes for Dry-Type Network. Three-Phase With 3 Primary Bushings and 3 Secondary Bushings – Conventional, 65/115° Rise Cast Coil, Rotated Layout

kVA	12,000 – 208Y/120 V	12,000 – 480Y/277 V	34,500GrdY/19,920 480Y/277 V
500	262777 [1, T]	–	–
750	262778 [1, T]	262773 [1, T]	262779 [1, T]
1,000	–	262774 [1, T]	262780 [1, T]
1,500	–	262775 [1, T]	–
2,000	–	262776 [1, T]	262781 [1, T]

Table 27 Codes for Dry-Type Network. Three-Phase With 3 Primary Bushings and 3 Secondary Bushings – Conventional, 65/115° Rise Cast Coil, In-Line Layout

kVA	12,000 – 208Y/120 V	12,000 – 480Y/277 V	34,500GrdY/19,920 480Y/277 V
500	–	–	–
750	–	–	262816 [1, T]
1,000	–	262813 [1, T]	262817 [1, T]
1,500	–	262814 [1, T]	–
2,000	–	262815 [1, T]	262818 [1, T]

Table 28 Codes for Pad-Mount Network, Three-Phase With 3 Primary Bushings and 3 Secondary Bushings (reference Document 045774 and Spec. 86) – Conventional, Mild Steel

kVA	12,000 - 480Y/277 V	34,500GrdY/19,920 - 480Y/277 V
750	260666 [1]	260655 [1]
1,000	260667 [1]	260656 [1]
1,500	260684 [1]	260657 [1]
2,000	260699 [1]	260658 [1]

[1] Current standard design and may be purchased.

[4] Use for replacement only and may be purchased.
[E] Included in Emergency Stock
[T] With high voltage taps

Specialty Transformers (continued)

Table 29 Codes for System Tie, Three-Phase, Pad-Mount With 3 Primary Bushings and 3 Secondary Bushings (reference Document 068184 and Spec. 86) – Conventional, Mild Steel

kVA	12,000/20,780GrdY/12,000 - 4,160GrdY/2,400 V 0° Phase Shift @ 21 kV 30° Phase Shift @ 12 kV	12,000 –4,800	6,930/12,000Y - 4,160Y/2,400 V 0° Phase Shift @ 12 kV	20780 - 4,160GrdY/2,400 V 30° Phase Shift @ 21 kV
	With One Recloser on Secondary Side			
2,500	261381 [1, E]	–	262578 [1, E]	262579 [1, E]
3,000	–	262696 [1, E]	–	

Table 30 Codes for System Tie, Three-Phase, Pad-Mount With 3 Primary Bushings and 3 Secondary Bushings (reference Document 051119 and Spec. 86) (continued) – Conventional, Mild Steel

kVA	20,780Y/12,000			17,200 V Delta
	12,000Y/6,930 V		17,200 V Delta	12,000Y/6930 V
	Without Recloser	With 2 Reclosers	30° Lead to 30° Lag Switch With Recloser on 21 kV Side	30° Lead to 30° Lag Switch Without Recloser
3,600	264134 [1]	262661 [1, E]		261151 [1, E, T]
7,500	261943 [1]	262473 [1, E]	262573 [1, E, T]	

Table 31 Codes for Pad-Mount, Grounding Bank, Three-Phase, (for cogeneration fault sensing with Ho bushing, 2.5% impedance) With 6 Primary Bushings and 3 Secondary Bushings (reference Document 062264 and Spec. 86) – Self-Protected, Mild Steel

kVA	20,780GrdY/12,000 - 480 V Delta
225	017072 [1]

Table 32 Codes for Zigzag - Radial Dead-Front, Three-Phase, Pad-Mount With 2 Primary Bushings and 4 Secondary Bushings Including the Insulated Neutral (reference Document 045786 and Spec. 86) – Conventional, Mild Steel

kVA	20,780GrdY/12,000	
	208Y/120 V	480Y/277 V
300	263073 [1, E]	263076 [1, E]

Single-Phase, Pad Mount, for Replacements Only

Table 33 Codes for Live-Front, Clam Shell, Single-Phase, Pad-Mount With 2 Primary Bushings and 2 Hot Secondary Bushings. Neutral May Be Permanently Grounded. (reference Document 042761 and Spec. 86) – Self-Protected

kVA	With Single-Phase Cabinet		
	12,000GrdY/6,930 - 240/120 V	12,000/20,780 GrdY - 240/120 V	
	Mild Steel	Mild Steel	Stainless Steel
50	–	263002 [4]	263037 [4]
100	261274 [4, E]	263004 [4, E]	263038 [4, E]
167	261275 [4, E]	263016 [4, E]	263039 [4]

[1] Current standard design and may be purchased.

[4] Use for replacement only and may be purchased.
[E] Included in Emergency Stock
[T] With high voltage taps

Single-Phase, Pad Mount, for Replacements Only (continued)

Table 34 Codes for Live-Front, Clam Shell, Single-Phase, Pad-Mount With 3 Primary Bushings and 2 Hot Secondary Bushings. Neutral May Be Permanently Grounded. (reference Document 042761 and Spec. 86) (continued) – Self-Protected

kVA	With Three-Phase Cabinet					
	12,000GrdY/6,930 240/120	4,160X12,000 240/120 V	12,000/20,780 GrdY – 240/120 V		17,200 240/120 V	20,780 240/120 V
	Mild Steel	Mild Steel	Mild Steel	Stainless Steel	Mild Steel	Mild Steel
50	–	263014 [4, E]	263006 [4, E]	263040 [4, E]	263010 [4, E]	263044 [4]
100	261276 [4, E]	263015 [4, E]	263008 [4, E]	263041 [4, E]	263012 [4, E]	263045 [4, E]
167	261277 [4, E]	263019 [4, E]	263017 [4, E]	263042 [4]	263018 [4, E]	263046 [4, E]

Single-Phase, Subsurface Round, for Replacements Only

Table 35 Codes for Subsurface Round, Single-Phase, 3 Secondary Bushings With Insulated Neutral. Use as the Power Transformer in the Bank. (reference Document 035313 and Spec. 91) – Self-Protected, Stainless Steel

kVA	4,160/7,200Y – 240/120 V 4 Primary Bushings		4,160GrdY/2,400 – 240/120 V 2 Primary Bushings		12,000/20,780GrdY 240/120 V 4 Primary Bushings	17,200 – 240/120 V 4 Primary Bushings
	No Switch	With Single-Phase Switch	No Switch	With Single-Phase Switch	No Switch	No Switch
25	262362 [4 E]	262316 [4]	–	–	–	–
50	–	–	–	–	–	262314 [4]
75	–	–	262328 [4]	–	–	–
100	–	–	–	–	262283 [4, E]	–
167	–	–	–	–	262284 [4, E]	–

Table 36 Codes for Subsurface Round Single-Phase With 3 Secondary Bushings, Neutral May Be Permanently Grounded. Use to Supply Single-Phase Load or as the Lighting Transformer in a Bank. (reference Document 035313 and Spec. 91) – Self-Protected, Stainless Steel

kVA	4,160/7,200Y 240/120 V 4 Primary Bushings	4,160GrdY/2,400 240/120 V 2 Primary Bushings		12,000/20,780GrdY 240/120 V 4 Primary Bushings		12,000/20,780GrdY 480/240 V 4 Primary Bushings
	No Switch	No Switch	With Single-Phase Switch	No Switch	With Single-Phase Switch	No Switch
25	–	–	–	–	–	262307 [1, E]
50	–	–	–	262058 [4, E]	262096 [4, E]	–
75	–	–	–	–	–	262324 [4, E]
100	(see Table 7 on Page 6)			262060 [4, E]	262098 [4, E]	–
167	262372 [4, E]	262121 [4, E]	262144 [4]	262062 [4, E]	262099 [4, E]	–

[1] Current standard design and may be purchased.

[4] Use for replacement only and may be purchased.
[E] Included in Emergency Stock

Single-Phase, Subsurface Round, for Replacements Only (continued)

Table 37 Codes for Subsurface Round, Single-Phase With 3 Secondary Bushings, Neutral May Be Permanently Grounded. Use to Supply Single-Phase Load or as the Lighting Transformer in a Bank. (reference Document 035313 and Spec. 91) (continued) – Self-Protected, Stainless Steel

kVA	12,000GrdY/6,930 240/120 V 2 Primary Bushings		17,200 240/120 V 4 Primary Bushings	20,780GrdY/12,000 240/120 V 2 Primary Bushings		20,780GrdY/12,000 480/240 V 2 Primary Bushings	
	No Switch	With Single-Phase Switch	No Switch	No Switch	With Single-Phase Switch	No Switch	With Single-Phase Switch
25	–	–	–	–	–	262321 [1, E]	262303 [1, E]
50	262054 [4, E]	262090 [4, E]	262186 [4, E]	262147 [4, E]	262153 [4, E]	–	–
100	262056 [4, E]	262092 [4, E]	262188 [4, E]	262149 [4, E]	262155 [4, E]	–	–
167	262086 [4, E]	262093 [4, E]	262189 [4, E]	262150 [4, E]	262156 [4, E]	–	–

Three-Phase, Pad-Mount, for Replacements Only

Table 38 Codes for Style IIC*, Three-Phase, Pad-Mount With 3 Primary Bushings and 4 Secondary Bushings Including the Insulated Neutral (reference Document 045290 and Spec. 86) – Self-Protected

kVA	4,160X12,000 480Y/277 V Mild Steel
1,500	260789 [1]
2,500	260791 [1, E]

(Style IIC and Style IIF transformers are completely interchangeable except for the primary fuses.)

*See Table 20 on Page 10 for others of this type.

Table 39 Codes for Style IIF, Three-Phase, Pad-Mount With 3 Primary Bushings and 4 Secondary Bushings Including the Insulated Neutral (reference Document 045290 and Spec. 86) – Self-Protected

kVA	12,000/20,780GrdY/12,000					
	208Y/120		480Y/277		2,400/ 4,160Y/2,400	
	Mild Steel	Stainless Steel	Mild Steel	Stainless Steel	Mild Steel	Stainless Steel
300	261284 [4, E]	–	261288 [4]	262115 [4, E]	–	–
750	261285 [4]	–	261289 [4]	–	–	–
1,000	261286 [4, E]	262114 [4]	261290 [4]	262116 [4, E]	261292 [4]	–
1,500	–	–	261291 [4]	–	261293 [4]	–
2,500	–	–	261328 [4]	262177 [4, E]	261329 [4]	262179 [4, E]

[1] Current standard design and may be purchased.

[4] Use for replacement only and may be purchased.
[E] Included in Emergency Stock

Three-Phase, Pad-Mount, for Replacements Only (continued)

Table 40 Codes for Style IIF, Three-Phase, Pad-Mount With 3 Primary Bushings and 4 Secondary Bushings Including the Insulated Neutral (reference Document 045290 and Spec. 86) (continued) – Self-Protected

kVA	4,160X12,000		17,200	
	208Y/120	480Y/277	208Y/120	480Y/277
	Mild Steel	Mild Steel	Mild Steel	Mild Steel
300	261281 [4]	261283 [4]	–	261296 [4]
750	261287 [4, E]	261282 [4, E]	261294 [4]	261297 [4]
1,000	–	–	261295 [4, E]	261298 [4, E]
1,500	–	–	–	261299 [4]
2,500	–	–	–	261330 [4, E]

Table 41 Codes for Style IIH, Three-Phase, Pad-Mount, Live-Front With Vacuum Fault Interrupter, with 3 Primary Bushings and 4 Secondary Bushings With Insulated Neutral With Stainless Steel Cabinet and FR3 Insulating Fluid (reference Document 072146 and Spec. 86)

kVA	12,000/20,780GrdY/12,000		17,200
	480Y/277	2,400/4160Y/2,400	480Y/277
	Mild Steel	Mild Steel	Mild Steel
2955/3325	262708 [4, E]	262709 [4, E]	262710 [4, E]

Table 42 Codes for Radial, Dead-Front*, Three-Phase, Pad-Mount With 3 Primary Bushings and 4 Secondary Bushings Including the Insulated Neutral (reference Document 043816 and Spec. 86) (continued) – Conventional

kVA	12,000/20,780GrdY/12,000		17,200
	208Y/120 V	480Y/277 V	480Y/277 V
	Mild Steel	Mild Steel	Mild Steel
75	260315 [4]	260314 [4]	–
150	260732 [4]	260317 [4]	–
300	260682 [4]	260326 [4]	–
750	260080 [4, E]	260039 [4, E]	260880 [4, E]
1,000	260107 [4, E]	260041 [4]	260181 [4]
1,500	–	260002 [4]	260883 [4, E]
2,500	–	260042 [4, E]	–

* See Table 18 on Page 10 for others of this type.

[1] Current standard design and may be purchased.

[4] Use for replacement only and may be purchased.
[E] Included in Emergency Stock

Three-Phase, Pad-Mount, for Replacements Only (continued)

Table 43 Codes for Radial, Live-Front, Three-Phase, Pad-Mount With 3 Primary Bushings and 4 Secondary Bushings Including the Insulated Neutral (reference Document 043816 and Spec. 86) – Conventional

kVA	4,160X12,000		17,200	
	208Y/120 V	480Y/277 V	208Y/120 V	480Y/277 V
	Mild Steel	Mild Steel	Mild Steel	Mild Steel
75	260695 [4]	–	260309 [4]	260613 [4]
150	–	–	–	260615 [4]
300	–	–	260289 [4]	260617 [4]
750	260921 [4]	–	–	–

Table 44 Codes for Radial, Live-Front, Three-Phase, Pad-Mount With 3 Primary Bushings and 4 Secondary Bushings Including the Insulated Neutral (reference Document 043816 and Spec. 86) (continued) – Conventional

kVA	12,000/20,780GrdY/12,000	
	208Y/120 V	480Y/277 V
	Mild Steel	Mild Steel
75	260710 [4]	260764 [4]
150	260755 [4]	260766 [4]
300	260757 [4]	260768 [4]
750	260759 [4]	260770 [4, E]
1,000	260760 [4, E]	–
1,500	–	260677 [4]
2,500	–	260773 [4, E]

Table 45 Codes for Subsurface Vault, Three-Phase With 3 Primary Bushings and 4 Secondary Bushings Including the Insulated Neutral (reference Document 072138 and Spec. 91) – Conventional, Plate Steel

kVA	12,000/20,780GrdY/12,000 – 208Y/120 V	12,000/20,780GrdY/12,000 – 480Y/277 V
300	262428 [4]	–
750	262430 [4]	262432 [4]
1,000	262107 [4, E]	262433 [4, E]
1,500	–	262434 [4]
2,500	–	015641 [4, E]

[1] Current standard design and may be purchased.

[4] Use for replacement only and may be purchased.
[E] Included in Emergency Stock

Designation of Voltage Ratings of Windings - Single-Phase Transformers

Table 46 Designation of Voltage Ratings of Windings – Single-Phase Transformers

Item	Designation	Typical Voltage Rating	Typical Winding Diagram	Description
1	E	12,000		Indicates a winding of E volts which is suitable for delta connection on an E volt system.
2	E/E_1Y [1]	2,400/4,160Y		Indicates a winding of E volts which is suitable for delta connection on an E volt system or for wye connection on an E_1 volt system.
3	E/E_1Grd.Y [1]	12,000/20,780 Grd. Y or 2,400/4,160 Grd.Y		Indicates a winding of E volts having insulation suitable for delta connection on an E volt system or for wye connection on an E_1 volt effectively grounded system.
4	E_1Grd.Y/E [1]	20,780 Grd. Y/12,000 or 12,000 Grd. Y/6,930		Indicates a winding of E volts which has one end of the winding grounded internally. Windings with one end grounded internally are suitable for single-phase or wye operation on a three-phase E_1 volt effectively grounded system.
5	E/2E	120/240 or 240/480	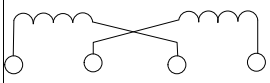	Indicates a winding, the sections of which can be connected in parallel for operation at E volts, connected in series for operation at 2E volts, or connected in series with a center terminal for 3-wire operation at 2E volts between the extreme terminals and E volts between the center terminal and each of the extreme terminals.
6	2E/E	240/120	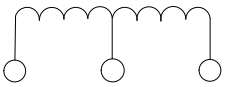	Indicates a winding having a mid-tap and suitable for 3-wire operation at 2E volts between extreme terminals and at E volts between the mid-tap and each of the extreme terminals (not reconnectable).

[1] $E_1 = \sqrt{3}E$

Designation of Voltage Ratings of Windings – Three-Phase Transformers

Table 47 Designation of Voltage Ratings of Windings – Three-Phase Transformers

Item	Designation	Typical Voltage Rating	Typical Winding Diagram	Description
7	E	12,000	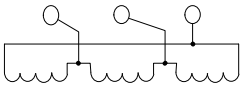	Indicates a winding that is permanently delta connected for operation on an E volt system.
8	E_1Grd.Y/E [1]	20,780 Grd.Y/12,000 or 34,500 Grd.Y/19,920	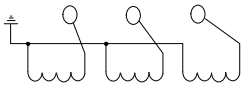	Indicates a winding that is permanently wye connected with neutral grounded to the tank for operation on an E_1 volt effectively grounded system with E volts available from line to neutral.
9	E/E_1Grd.Y/E [1]	12,000/20,780 Grd.Y/12,000	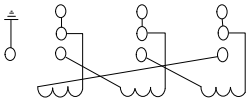	Indicates a winding which may be delta connected for operation on an E volt system or may be wye connected for operation on an E_1 volt grounded system with E volts available from line to neutral.
10	V x V_1	4,160 x 12,000	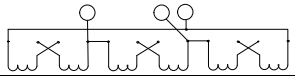	Indicates a permanently delta connected winding for multiple or series operation.
11		12,000 x 34,500 Grd. Y/19,920	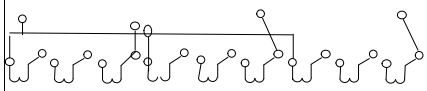	Indicates a winding which may be delta connected for operation on a 12 kV system or wye connected for operation on a 34.5 kV effectively grounded wye system.

[1] $E_1 = \sqrt{3}E$

Table 48 Transformer Insulating Fluid Material Codes

	FR3 High-Fire Point Natural Ester	BioTemp High-Fire Point Natural Ester	Mineral Oil	Silicone High-Fire Point
National Standard	ASTM D6871	ASTM D6871	ASTM D3487	ASTM D4652
5 Gallon Pail			M507033	
55 Gallon Drum	M500046		M507034	M500043
Bulk			M507017	

Primary Voltages

Table 49 System Primary Voltages [1]

Phase	Primary Voltages	System
Single-Phase	2,400/4,160Y	For 2.4 kV - L-L Connection
Single-Phase	2,400 x 4,800	For 2.4 kV - L-L Connection
Single-Phase	4,160/7,200Y	For 4 kV - L-L Connection
Single-Phase	4,160GrdY/2,400	For 4 kV - 4-Wire L-G Connection
Single-Phase	4,160 x 12,000	For 4 kV - L-L Connection
Single-Phase	4,160 x 7,200	For 4 kV - L-L Connection
Single-Phase	7,200/12,470Y	For 12 kV - 4-Wire L-G Connection
Single-Phase	12,000	For 12 kV L-L or 21 kV L-G Connection
Single-Phase	12,000/20,780 GrdY	For 12 kV L-L or 21 kV L-G Connection
Single-Phase	12,000/20,780Y	For 12 kV L-L or 21 kV L-G Connection
Single-Phase	12,000GrdY/6,930	For 12 kV - 4-Wire L-G Connection
Single-Phase	12,470GrdY/7,200	For Use in Chester
Single-Phase	17,200	For 17 kV L-L Connection
Single-Phase	20,780	For 21 kV L-L Connection
Single-Phase	20,780GrdY/12,000	For 21 kV - 4-Wire L-G Connection
Single-Phase	24,940GrdY/14,400	For Use in Chester
Single-Phase	44,000	For 44 kV - L-L Connection
Single-Phase	44,000/25,400	For 44 kV - L-L Connection
Three-Phase	4,160	For 4 kV - Delta Connection
Three-Phase	4,160GrdY/2,400	For 4 kV - 4-Wire L-G Connection
Three-Phase	4,160 x 12,000	For 4 kV - Delta Connection
Three-Phase	4,160 x 12,480	For 4 kV - Delta Connection
Three-Phase	12,000	For 12 kV - Delta Connection
Three-Phase	12,000/20,780GrdY/12,000	For 12 kV Delta or 21 kV GrdY Connection
Three-Phase	12,000 x 20,780	For 12 kV Delta or 21 kV Delta Connection
Three-Phase	12,000 x 34,500GrdY/19,920	For 12 kV or 34.5 kV Networks
Three-Phase	17,200	For 17 kV Delta Connection
Three-Phase	20,780	For 21 kV Delta Connection
Three-Phase	20,780GrdY/12,000	For 21 kV GrdY Connection
Three-Phase	20,780Y/12,000	For 21 kV Y Connection
Three-Phase	34,500GrdY/19,920	For 34.5 kV Networks

[1] Table 49 is intended to be a reference between the transformer's primary voltage and the type of primary system that it can be used on in the PG&E system.

Pictorial Index

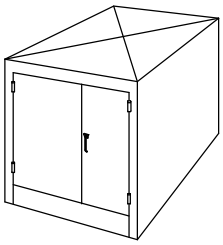

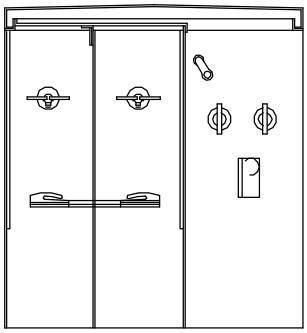

Front View
(doors removed)

Box Style

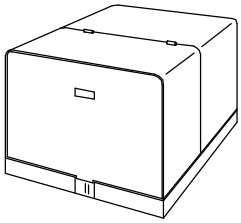

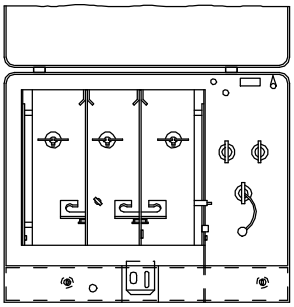

Front View
(hinged top open)

Clam Shell Three-Phase Cabinet

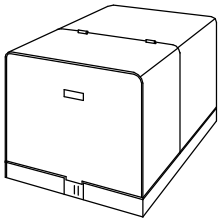

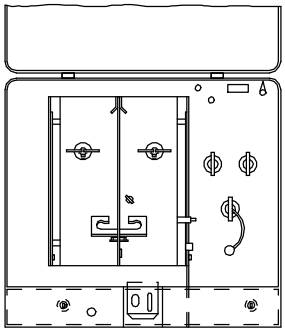

Front View
(hinged top open)

Clam Shell Single-Phase Cabinet

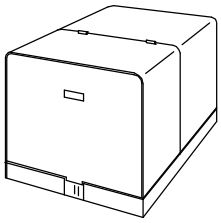

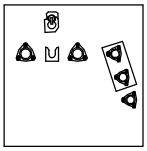

1-Wire Cabinet

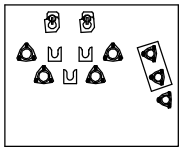

2-Wire Cabinet

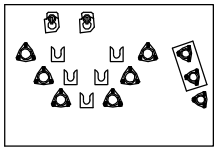

3-Wire Cabinet

Front Views (hinged tops open)

Single-Phase - Style Dead-Front

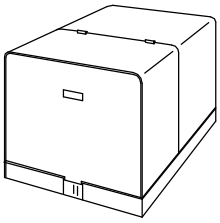

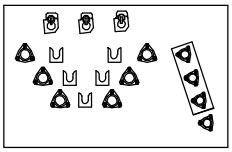

Style MTP and Duplex Style DF

Figure 1
Single-Phase, Pad-Mount Transformers for Loop or Radial Application

Pictorial Index (continued)

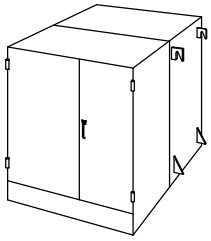

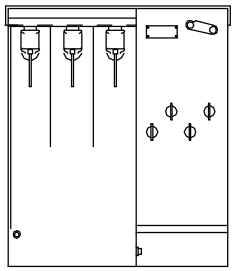

Front View
(doors removed)

Style IIA

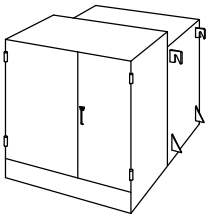

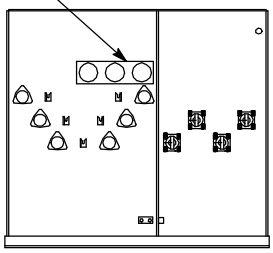

Front View
(doors removed)

Style IID 75 – 300 kVA

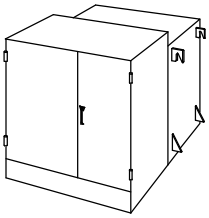

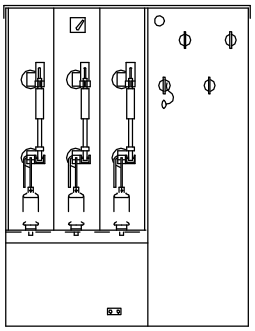

Front View
(doors removed)

Style IIB 225 – 1,000 kVA

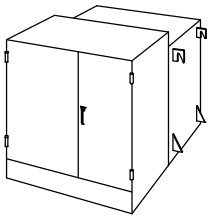

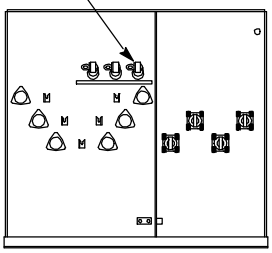

Front View
(doors removed)

Style IIE 75 – 2,500 kVA

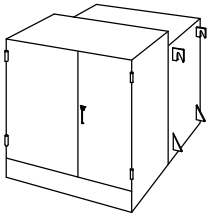

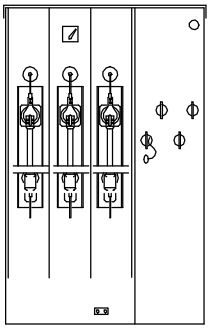

Front View
(doors removed)

Style IIC 1,500 – 2,500 kVA

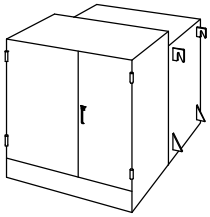

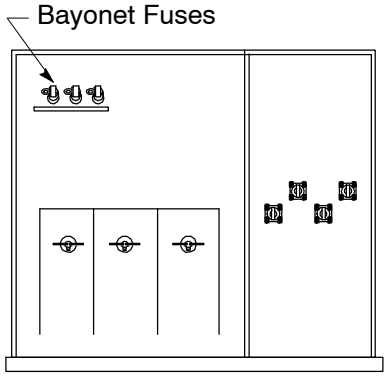

Style IIF 300 – 2,500 kVA

Figure 2
Three-Phase, Pad-Mount Transformers for Loop or Radial Application

Pictorial Index (continued)

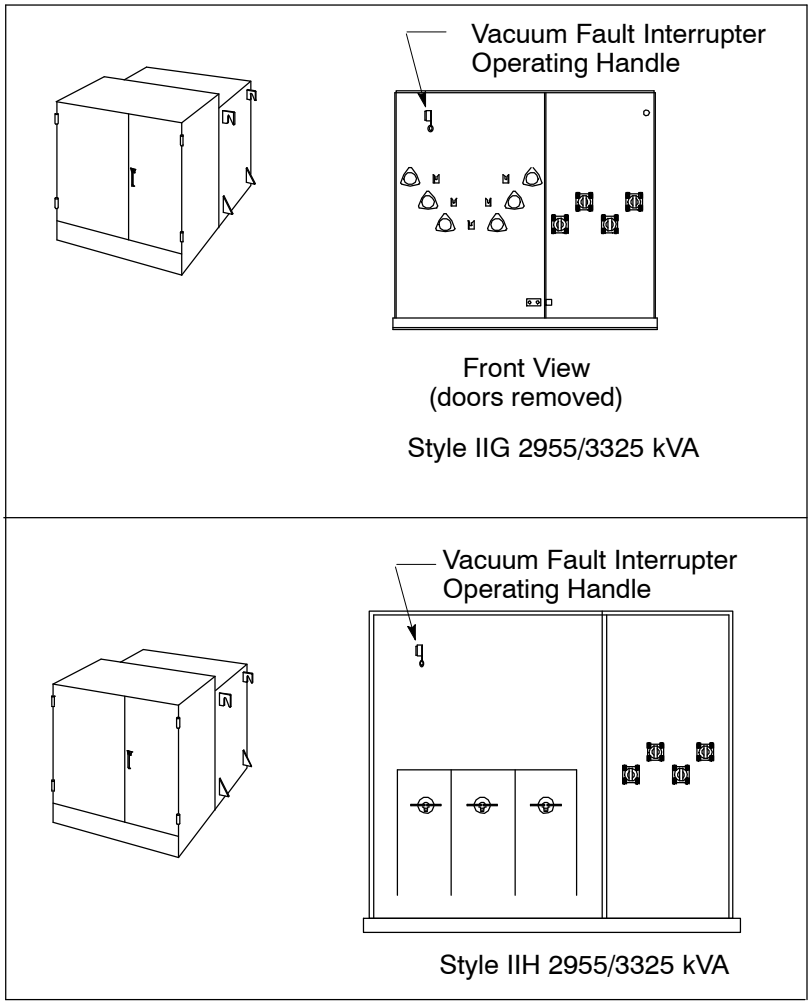

Figure 3
Three-Phase, Pad-Mount Transformers for Loop or Radial Application

Pictorial Index (continued)

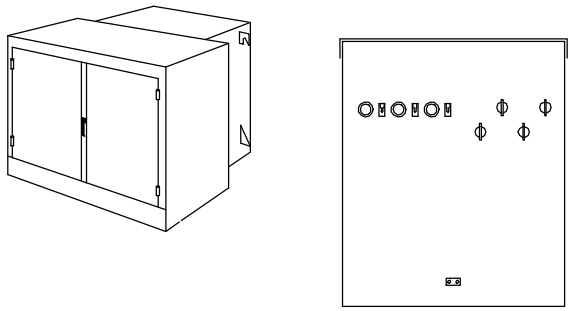

Front View
(doors removed)

Dead-Front Radial

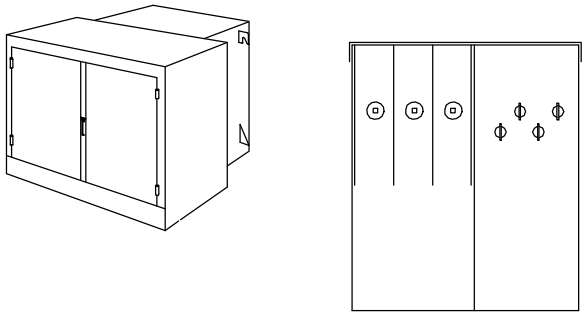

Front View
(doors removed)

Live-Front Radial

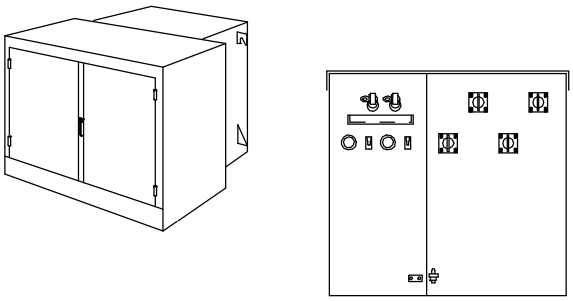

Front View
(doors removed)

Open Wye to Zigzag Wye

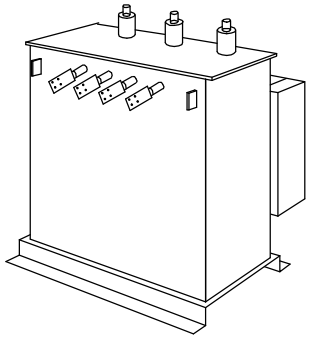

Fence Enclosed

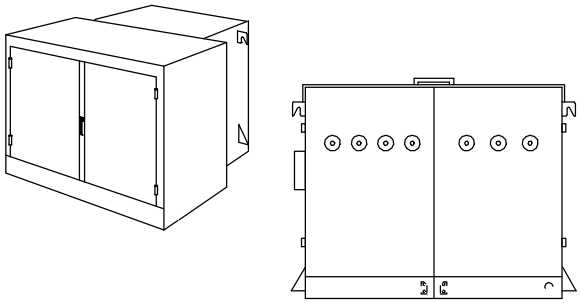

Front View
(doors removed)

12 – 21 kV Tie Autotransformer

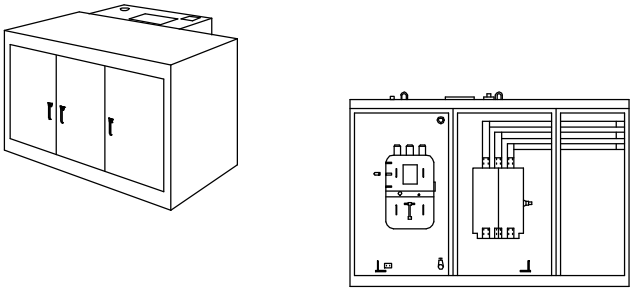

Front View
(doors removed)

Pad-Mounted Network Transformer

Figure 4
Three-Phase, Pad-Mount Transformers for Radial Application

Pictorial Index (continued)

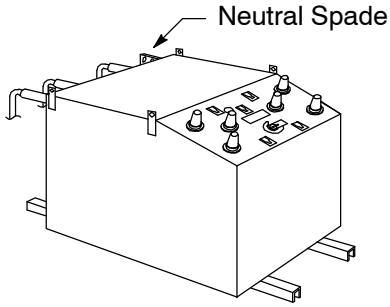

Front View

Three-Phase, Subsurface, Duplex Horizontal

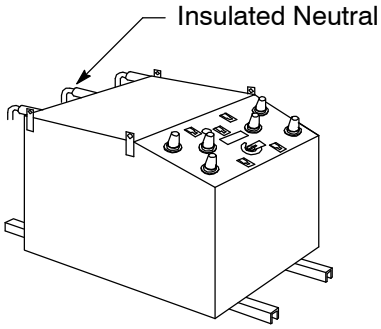

Single-Phase, Subsurface Horizontal - 6-Bushing

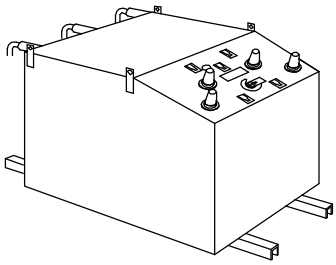

Single-Phase, Subsurface Horizontal - 4-Bushing

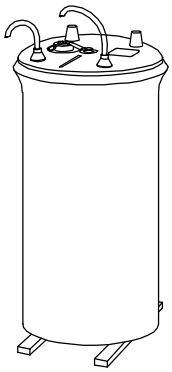

Single-Phase, Subsurface Round-Type

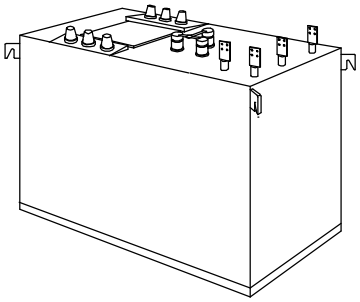

Three-Phase UCD Transformer

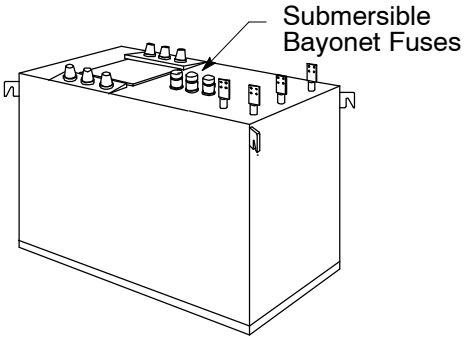

Three-Phase UCD–LB Transformer

Figure 5
Subsurface Transformers for Loop or Radial Application

Pictorial Index (continued)

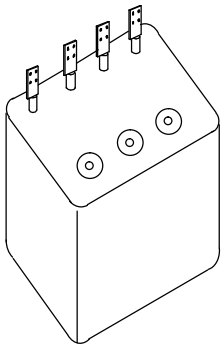

Subway–LB

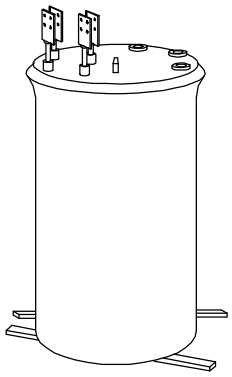

Single-Phase Subsurface Subway

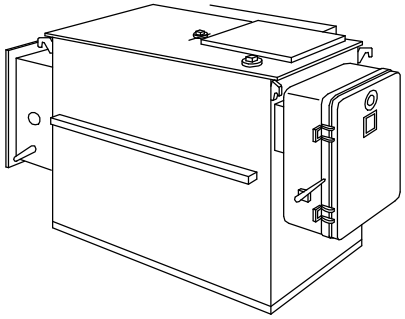

Three-Phase Network Transformer With Protector

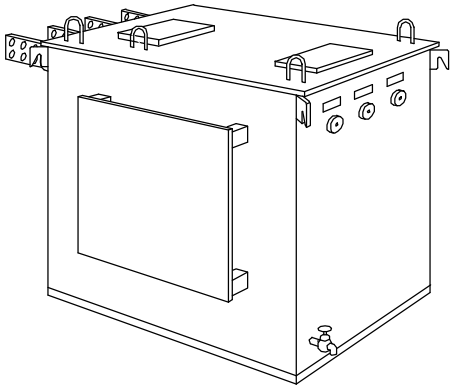

Three-Phase Subsurface Vault

Figure 6
Subsurface Transformers for Radial Application

Revision Notes

Revision 24 has the following changes:

1. Corrected Stainless Steel column in Table 1 on Page 5 from “261892 [1]” to “262892 [1]”.
2. Corrected column two header in Table 7 on page 6 from “2400/4160GrdY” to “4160/7200Y”.
3. Revised reference document correction for Table 44 on Page 17.
4. Added Table 48 on Page 19 “Transformer Insulating Fluid Material Codes”.

Prepared by: ABB1

PG&E	**UNDERGROUND CONDUITS**	**062288**

Asset Type:	Electric Distribution	**Function:**	Design and Construction
Issued by:	Lisseth Villareal (LDV2)	**Date:**	07-01-16

Rev. #16: This document replaces PG&E Document 062288, Rev. #15 For a description of the changes, see Page 25.

Purpose and Scope

This document covers steel and plastic conduit for electric underground installations, with or without concrete encasement.

General Information

1. Applications for underground conduit are as follows:
   A. Residential: All residential installations requiring conduit should be made without concrete encasement.
   B. Light Commercial, Industrial, and Underground Residential Distribution (URD) Feeder: Installation of circuits of this type, which are three-way or less, should normally be made without concrete encasement. In densely populated urban areas, conduit banks involving more than three primary conduits will normally require concrete encasement.
   C. Severe exposure to “dig-ins” and other hazards may require concrete encasement of conduit lines.
   D. For any rail road crossings, single wall or co-extended cellular core wall PVC Schedule 40, UL 651 conduit is required.
2. When conduit, including service conduit, is to be installed for PG&E by others, the following are acceptable alternatives to the American Society of Testing and Materials (ASTM) F512 (DB-120) conduits listed in this document:
   A. Single wall and co-extruded cellular core wall PVC Schedule 40 or 80 UL 651 conduit that is so marked.
   B. Hot-dip galvanized rigid steel conduit conforming to American National Standards Institute (ANSI) Specification C80.1.

   It is the installer’s responsibility to use the proper fitting to join conduits. This transition may involve changes in both conduit type and size. If equal diameter conduits of different wall thicknesses are joined, the inside edge of the spigot end must be chamfered.
3. The current carrying capacity of an insulated cable is reduced if it is surrounded by other loaded cables. For this reason, conduit banks should be arranged so that each conduit is in an outside position.
4. Every effort should be made to obtain a straight, watertight conduit line.
5. In commercial distribution systems, consideration should be given to providing one or more spare conduits in the original construction for future load growth requirements. The addition of such conduits at a later time is much more costly.
6. A mandrel shall be used to prove that all conduits are free and clear of dirt, rocks, and other debris. For further information refer to Greenbook 3.4.1.
7. A pulling tape with sequential footage markings (code 560154) shall be installed in all conduits and attached to an end cap. The tape shall be proven free and not glued or caught on joints.
8. All conduits shall be capped. All conduits not terminating in a subsurface enclosure, pedestal, or vault are to be capped with unglued rigid caps (see Table 12 on Page 8). Conduits terminating in a subsurface enclosure, pedestal, or vault shall be capped with temporary plugs (see Table 12 on Page 8).
9. When the intrusion of water into buildings can be reasonably expected through lateral service ducts, PG&E is responsible for sealing both ends of the conduit (refer to Document 063927 and Document 063928). The

Rayflate Duct Sealing System (RDSS) conduit sealing system can be ordered for this purpose. RDSS must be used when waterproofing a subsurface transformer enclosure is required. Refer to Document 072149.

10. For the design requirements of conduits installed on bridges see Document TD-2310P-10.

Material Specifications

11. Plastic conduits and fittings shall comply with the latest revision of ASTM Standard F512 for PVC, and shall also meet the following specific requirements:
    A. Single wall conduit cell classification of 12164-B or 12264-B, tensile modulus of 500,000 psi.
    B. Co-extruded cellular core wall conduit cell classification of 12254-B, minimum average tensile modulus of 445,000 psi.
    C. Fittings cell classification of 12234-B.
    D. Marking shall conform to ASTM Standard F512 requirements.
    E. The inside edge of conduit ends (spigot-end only in the case of belled-end conduit) shall be beveled to eliminate sharp edges and minimize the possibility of cable damage.
    F. PVC conduit and fittings will be gray in color.

Application

12. Plastic conduit may be cut with a hacksaw or a fine-toothed wood saw. Clean off burrs. Bevel the inside to eliminate sharp edges.
13. Apply a thin, uniform coat of cement to both surfaces to be glued. Avoid excessive use of cement to prevent the formation of a bead of cement on the interior shoulder of the joint since, when hardened, the bead can cause cable damage during installation. Immediately after applying the coat of cement to the conduit, insert the conduit into the fitting socket until it bottoms at the fitting shoulder. Turn the conduit 1/4 turn during insertion to distribute the cement evenly. Hold the conduit in place for about 1 minute to prevent backing out in case of tight interference fit joints. Wipe any excess cement away from the outside of the joint. Weather conditions may vary the curing time. When using cement in confined areas, adequate ventilation must be provided.

Table 1 Cement for Use With Plastic Conduits

Application	Quantity	Code	Manufacturer	Part Number
PVC to PVC	1 Quart	490157	Oatey	30886
	1 Pint	490151	Oatey	30885

14. Backfill containing large rock, paving material, cinders, large amounts of sharply angular substance, or corrosive material shall not be placed in excavations where such material may damage conduits, prevent adequate compaction of the fill, or contribute to corrosion of the conduits.
15. End bells are to be used to terminate all conduits, unless the conduit has been terminated in an enclosure equipped with duct terminators. Cable protectors are to be used on reconstruction projects only, when end bells cannot be installed.
16. In applications where a conduit dead-ends, cap the end of the conduit and place a marker ball (material code 374947) at the location. Refer to M-60 for more information.
17. Conduits shown in Table 10 (HDPE) and Table 11 (Bore-Gard) on Page 7 are for directional boring applications only.
18. **Caution:** When pulling conduits in boring applications, be certain to cut the conduits allowing sufficient extra length for the conduit to relax. It may take as long as 72 hours for an excessively stretched conduit to fully relax.
19. **Caution:** Snap-N-Stac Combo Spacers should be used in concrete encased application.
20. Conduit shown on Table 20 through Table 27 (flexible conduit) on Page 11 through Page 16 are for use in areas with minor soil settlement issues, and for large radius sweeps or re-routes.
21. Single wall conduit PVC DB-120 is not allowed for 2” conduit size.

Underground Conduits

References	Location	Document
Underground Duct Lines Concrete Encased	FRO: UG Conduit	031792A
Underground Conduit Without Concrete Encasement	FRO: UG Conduit	031793A
Methods and Requirements for Installing Residential Underground Electric Services 0–600 V to Customer-Owned Facilities	UG-1: Services/Greenbook	063927
Methods and Requirements for Installing Commercial Underground Electric Services 0-600 Volts to Customer-Owned Facilities	UG-1: Services/Greenbook	063928
Selection of the Type of Underground Equipment	UG–1: General/Greenbook	072149
Engineering Material Specification 64, “Polyvinyl Chloride (PVC), Conduits, and Fittings”	TIL	EMS64
Engineering Material Specification 99, “Underground Electric Duct System (installed by applicant)”	TIL	EMS99
Engineering Material Specification 4123, “Backfill Sand	TIL	EMS4123
Electric Distribution Conduits Installed on Bridges	TIL	TD-2310P-10
Approved “Mark and Locate” Instruments, Equipment, Accessories, and Products	TIL	M-60

Rigid Steel Conduit and Fittings

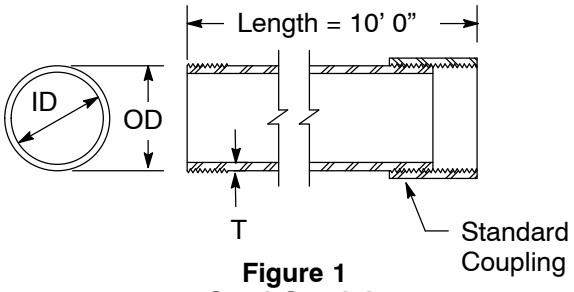

Figure 1
Steel Conduit

Table 2 Codes for Rigid Steel Conduit

Conduit Size (inches)	Dimensions (inches)			Weight (lbs.)[1]	Code
	OD	ID	T		
2	2.4	2.06	0.154	33	362103
3	3.5	3.06	0.216	69	362092
4	4.5	4.02	0.237	98	362093
5	5.6	5.04	0.258	134	362104
6	6.6	6.06	0.280	177	362141

[1] Weight for one 10-foot length, including one standard coupling furnished with each length.

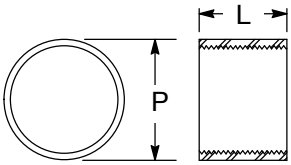

Figure 2
Steel Coupling

Table 3 Codes for Standard Steel Coupling

Conduit Size (inches)	Dimensions (inches)		Code
	P	L	
2	2.73	2.18	362105
3	4.00	3.25	362094
4	5.00	3.50	362095
5	6.29	3.75	362106
6	7.39	4.00	362142

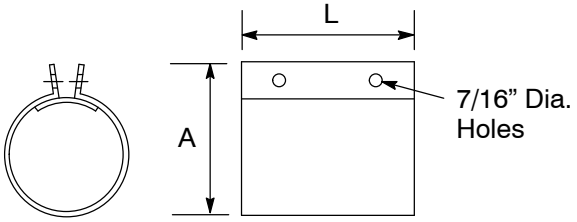

Figure 3
Split Coupling

Table 4 Codes for Galvanized Steel Split Coupling

Conduit Size (inches)	Dimensions (inches)		Code
	A	L	
2	2.5	9	362019
3	3.5	9	362021
4	4.5	9	362023
5 [1]	5.5	9	362107
6 [1]	6.5	9	362143

[1] These sizes are made of zinc-plated malleable iron. Can be installed on rigid steel conduits.

Rigid Steel Conduit and Fittings (continued)

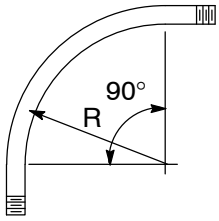

Figure 4
Conduit Sweep
Threaded Both Ends

Table 5 Codes for 90° Steel Conduit Sweeps, TBE

Conduit Size (inches)	Radius (inches)	Code
2	24	360081
3	36	362091
4	36	362090
	60	360812
5	36	362109
6	36	362144
	48	362145
	60	360813

Plastic Conduit and Fittings

Notes

1. The depth of all couplings, adapters, swedge reducers, and bell ends shall conform to the requirements listed in Table 2 of ASTM Standard F512.

Table 6 Data and Codes for Rigid Plastic Conduit DB-120 [1]

Conduit Size (inches)	Dimensions (inches)				Code
	Outside Diameter	Minimum ID	Wall Thickness		
			Minimum	Maximum	
2 [2]	2.375	2.189	0.083	0.113	360153
3	3.500	3.204	0.118	0.148	016471
4	4.500	4.132	0.154	0.184	016472
5	5.563	5.121	0.191	0.221	016473
6	6.625	6.111	0.227	0.257	016474

1 See Note 11 on Page 2 for material specifications.
2 Co-extruded cellular core DB-120.

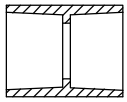

Figure 5
Standard Coupling

Table 7 Codes for Standard Couplings

Standard Coupling		
Conduit Size (inches)	Code	Minimum Socket Depth
2	360321	1.75
3	360322	2.875
4	360323	3.375
5	360401	4.0
6	360482	5.0

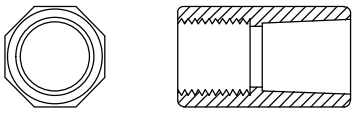

Figure 6
Plastic-to-Steel Adapter

Table 8 Codes for Plastic-to-Steel Adapters

Conduit Size (inches)	Code
2	360324
3	360325
4	360326
5	360402
6	360489

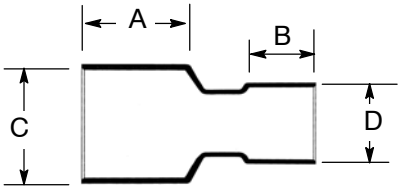

Figure 7
Swedge Reducer with Belled Ends

Table 9 Data and Codes for Swedge Reducers [1], [2]

Reducer Size (inches)	Dimensions (inches)				Code
	Minimum Length		Typical Belled End ID		
	A	B	C	D	
3 x 2	2.875	1.750	3.515	2.393	018585
4 x 3	3.375	2.875	4.515	3.515	018584
5 x 4	4.000	3.375	5.593	4.515	360777
6 x 5	5.000	4.000	6.658	5.593	360778

1 Both belled ends must be chamferred 0.3 inches (min) by 45°.
2 Reducers are made of PVC Schedule 40 .

Plastic Conduit and Fittings (continue)

Table 10 High Density Polyethlene (HDPE) Conduit Directional Boring Conduit [1]

Conduit				Mechanical Couplings [2, 3]	
Size	Length (feet)	Description	Code	Size (inches)	Code
2” Sch 80	500	Coil [4]	360511	2	360690
2” Sch 80	40	Stick	360017		
3” Sch 80	500	Coil [4]	360644	3	360691
3” Sch 80	40	Stick	360018		
4” Sch 80	625	Coil [4]	360687	4	360692
4” Sch 80	625	Coil [5]	360014		
4” Sch 80	40	Stick	360015		
5” SDR 13.5	450	Coil [4]	360688	5	360694
5” SDR 13.5	450	Coil [5]	360012		
5” SDR 13.5	40	Stick	360013		
6” SDR 13.5	450	Coil [4]	360689	6	360695
6” SDR 13.5	450	Coil [5]	360010		
6” SDR 13.5	40	Stick	360011		

1 Color shall be black with at least 3 red longitudinal strips.
2 May be used to connect PE conduit to PVC conduit (except in directional drilling apps.)
3 Mechanical couplings are not designed for directional drilling. Fusion joints are required.
4 No reel.
5 With reel.

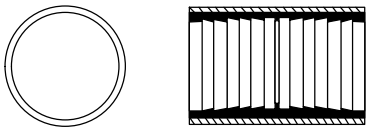

Figure 8
HDPE Coupling

Table 11 PVC (Bore-Gard) Directional Boring Conduit

Size (inches)	Description	Code
3	Conduit 10’, Schedule 40	360055
3	Conduit 20’, Schedule 40	360056
4	Conduit 10’, Schedule 40	360026
4	Conduit 20’, Schedule 40	360025
4	Replacement Locking Straps [1]	360031
4	Replacement Seal Gaskets [1]	360029
6	Conduit 10’, Schedule 40	360027
6	Conduit 20’, Schedule 40	360028
6	Replacement Locking Straps [1]	360032
6	Replacement Seal Gaskets [1]	360030

1 Package of 10.

Plastic Conduit and Fittings (continued)

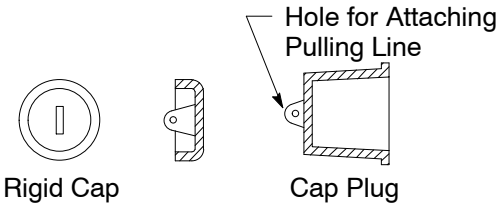

Figure 9
Plastic Conduit Caps

Table 12 Codes for Rigid Conduit Caps and Cap Plugs

Conduit Size (inches)	Codes	
	Rigid Cap	Cap Plug
2	360425	360440
3	360426	360441
4	360428	360443
5	360429	360444
6	360488	360494

Figure 10
End Bell

Table 13 Codes for End Bells

Conduit Size (inches)	Code
2	360420
3	360421
4	360423
5	360424
6	360487

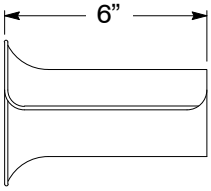

Figure 11
Cable Protector

Table 14 Codes for Cable Protectors [1]

Conduit Size (inches)	Code
2	382034
3	382045
4	
5	
6	

[1] Not for new installations; for replacement only.

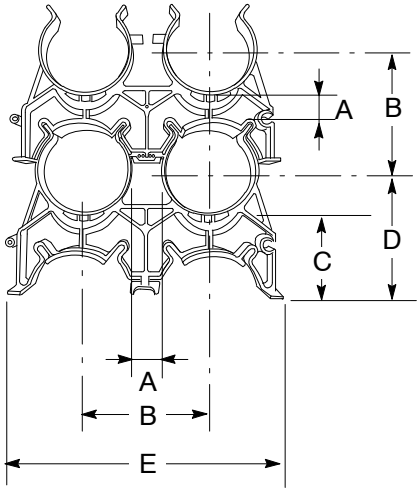

Figure 12
Snap-N-Stac Combo Spacers

Table 15 Codes for Snap-N-Stack Combo Spacers [1]

Conduit Size (inches)	Duct OD (inches)	Horizontal Duct Positions	Dimensions (inches)					Material Codes
			A	B	C	D	E	
3	3.5	2	2	5.5	3.63	5.38	11	360459
4	4.5	2	2	6.5	3.88	6.06	13	360460
5	5.5	2	2	7.56	4.38	7.25	15.12	360461
6	6.625	2	2	8.62	4.13	7.38	17.25	360491

[1] Cable spacers allow only for 2” separation between conduits. Cable spacers are used only where is required to route around existing obstructions. Thus, locations where cable spacers are needed are exempt from the requirement of maintaining 3” separation between 600 A distribution circuits.

Plastic Conduit and Fittings (continued)

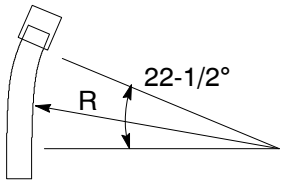

Figure 13
22-1/2° PVC Conduit Bend

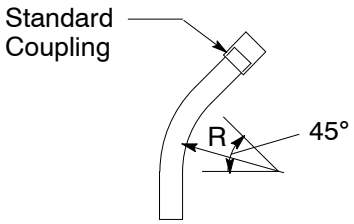

Figure 14
45° PVC Conduit Bend

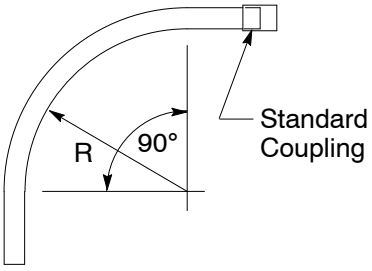

Figure 15
90° PVC Conduit Bend

Table 16 Codes for DB-120 PVC Conduit Bends (sweeps)

Conduit Size (inches)	Sweep		Code
	Degree	Radius [2] (inches)	
2 [1]	11-1/4	24	360155
		36	360156
	22-1/2	24	360157
		36	360158
	45	24	360159
		36	360160
	90	24	360161
		36	360162
3	11-1/4	36	360801
	22-1/2	36	360800
	45	36	360403
	90	24	360405
		36	360328
4	11-1/4	36	360804
		36	360805
	22-1/2	36	360760
		36	360761
	45	36	360412
		36	360413
	90	36	360414
		36	360415
5	11-1/4	36	360808
		60	360809
	22-1/2	36	360806
		60	360763
	45	36	360416
		60	360417
	90	36	360418
		60	360419
6	11-1/4	60	360811
	22-1/2	60	360765
	45	36	360485
		60	360486
	90	36	360483
		60	360484

1 Co-extruded cellular core wall DB-120.
2 For each conduit bend; first is row minimum vertical radius, second row is minimum horizontal radius.

Large Radius Sweeps

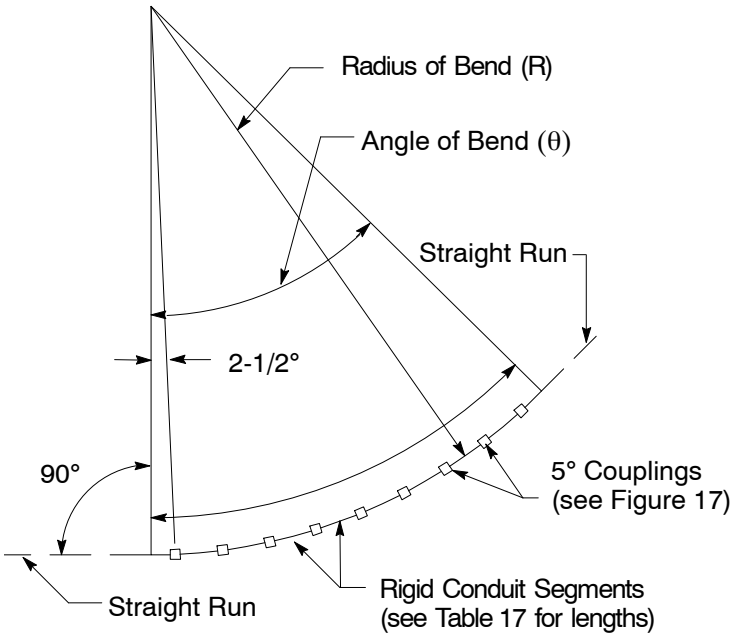

Figure 16
Typical Application of 5° Couplings

Example

Radius Bend (R) = 60 Feet
Angle of Bend (θ) = 45°

From Table 17 The nearest value to 60-foot radius is 57’ 6”.
The length of conduit segments = 5 feet.

From Table 18 For a 45° angle bend:
The number of 5° couplings required = 9.
The number of conduit segments required = 8.

Table 17 Length of Rigid PVC Conduit Segments

Approximate Radius of Bend (R)	Length of Rigid Conduit Segments (feet)
11’ 6”	1
17’ 3”	1.5
23’ 0”	2
28’ 9”	2.5
34’ 6”	3
40’ 3”	3.5
46’ 0”	4
51’ 9”	4.5
57’ 6”	5
69’ 0”	6
80’ 6”	7
92’ 0”	8

Table 18 Number of Couplings and Conduit Segments Required

Angle of Bend (θ)	Number of Couplings and Outside Diameter Conduit Segments Required	
	Coupling	Conduit
15°	3	2
30°	6	5
45°	9	8
60°	12	11
75°	15	14
90°	18	17

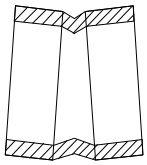

Figure 17
5° Coupling

Table 19 Codes for DB-120 PVC 5 Degree Coupling

Coupling Size (inches)	Code
2 [1]	360154
3	360399
4	360400
5	360407
6	360495

[1] Co-extended cellular core wall DB-120

Flexible (HDPE) Conduit and Fittings

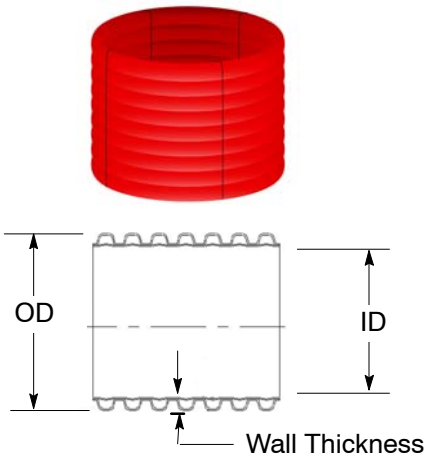

Figure 18
Corrugated Core Flex Conduit

Table 20 Data and Codes for Corrugated Core Flex Conduit With Couplers (250' coil) [1, 2, 3]

Conduit Size (inches)	Dimension (inches)			Code
	Outside Diameter	Inside Diameter	Wall Thickness	
2	2.375	2.050	.163	360095
3	3.500	2.950	.275	360096
4	4.750	3.975	.387	360097

1 Conduit can be used in areas minor soil settlement issues or for re-routes.
2 Inside wall is corrugated.
3 Minimum bending radius is 24 inches for all sizes.

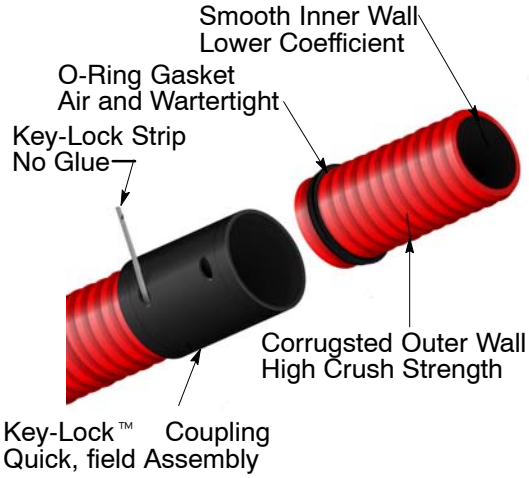

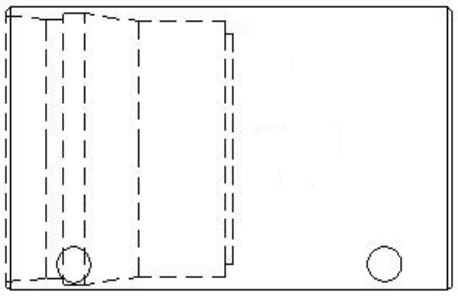

Figure 19
Key-Lock™ Couplers

Table 21 Data and Codes for Key-Lock™ Couplers [1]

Conduit Size (inches)	Insertion Lengths (inches)	Code
2	2.725	360102
3	3.125	360103
4 [2]	2.875	360105

1 Kit has coupler, two locks and two gaskets.
2 Coupler to connect corrugated core flex to corrugated core flex.

Flexible (HDPE) Conduit and Fittings (continued)

Install the Key-Lock Coupler Following the Procedure Below

1. Make certain the elastomeric gasket is seated in the second corrugation on 4” conduit and the first corrugation on 6” conduit. Be sure the gasket is positioned as shown on Figure 20.

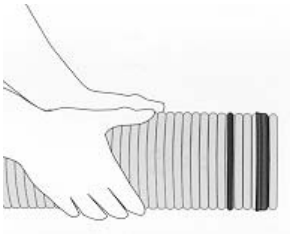

Figure 20
Key-Lock™ Couplers Gasket Position

2. Use only a water-based lubricant. Apply the lubricant to the outside surface of the gasket. A light coating of lubricant should also be applied to the chamfered leading edge of the coupler as shown on Figure 21.

Figure 21
Key-Lock™ Couplers Lubricant Application

3. Insert the gasketed end of the Smooth-Cor® conduit into the coupler. Note the black home-mark, which is used to identify proper coupling as shown on Figure 22.

Figure 22
Key-Lock™ Couplers Insertion

Flexible (HDPE) Conduit and Fittings (continued)

Install the Key-Lock Coupler Following the Procedure Below (continued)

4. Use a mallet and wood block to seat the coupler until the home-mark is covered. Note that the small lock ring on the inside surface of the coupler snaps into a matching corrugation as shown on Figure 23.

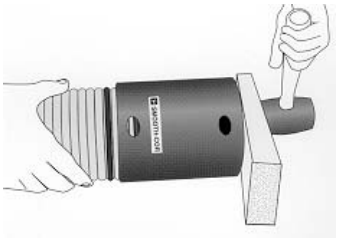

Figure 23
Key-Lock™ Couplers Locked in Place

5. Insert the Key-Lock™ strip following the directional arrow into the pre-drilled hole in the coupler. Apply a small amount of lubricant to aid in the insertion. Push the Key-Lock™ strip (in the direction of the arrow on the label) around the entire circumference, locking the grooves in the conduit and coupler securely together. Trim the excess Key-Lock™ strip material from the coupler (optional). See Figure 24 below.

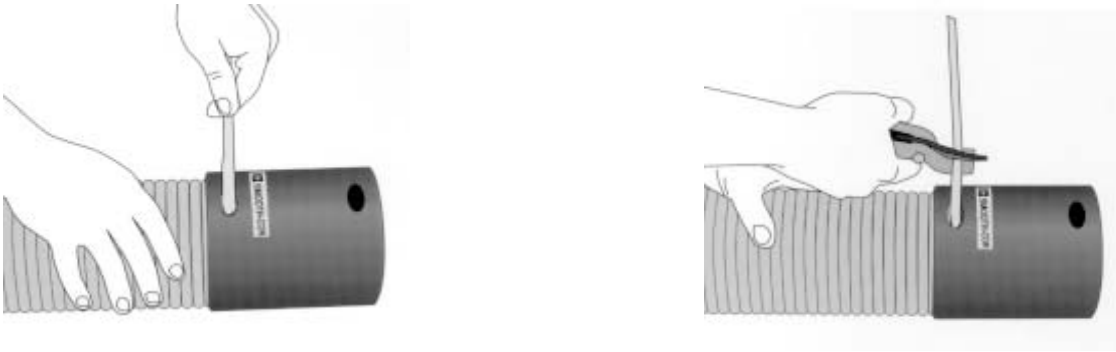

Figure 24
Key-Lock™ Couplers Strip Insertion

Flexible (HDPE) Conduit and Fittings (continued)

Install the Key-Lock Coupler Following the Procedure Below (continued)

Note: When cutting the Smooth-Cor® conduit in the field to a custom length, it necessary to follow the steps below:

1. Cut the conduit at the selected corrugation valley.
2. Place the gasket over the newly cut and cleaned end, making certain to seat the gasket on the second corrugation for 4” conduit and on the fourth corrugation for 6” conduit. The higher ridge of the elastomeric seal is positioned toward the body of the conduit and the lower ridge toward the end of the conduit. Using a felt marker, place a home-mark on the conduit to achieve proper coupling. When using 4” conduit, place the home-mark on the seventh corrugation; for the 6” conduit, place the home-mark on the fourth corrugation. Repeat steps 2-5 as shown on Page 12 and 13 to complete coupling. See Figure 25 below.

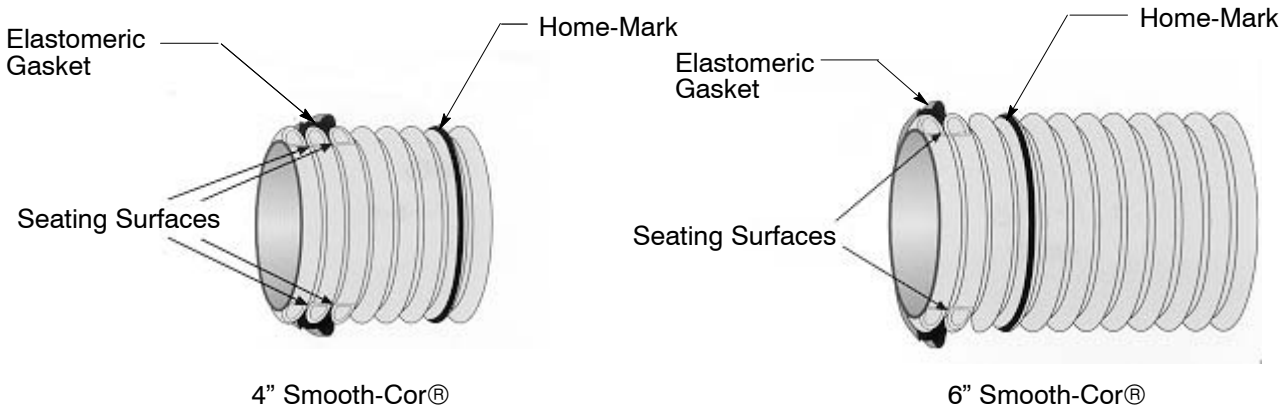

Figure 25
Key-Lock™ Couplers Cut at Customized Length

Flexible (HDPE) Conduit and Fittings (continued)

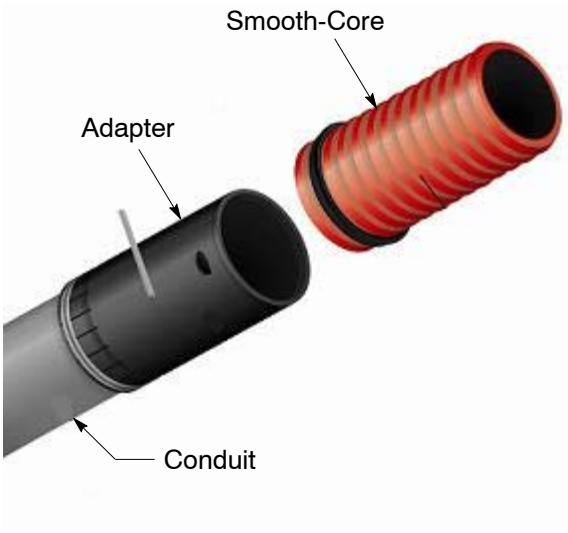

Table 22 Data and Codes for Shurlock/Key-Lock™ (Adapter Smooth-Core-Shur-Lock Kit™ 1)

Conduit Size (inches)	Dimension (inches)	Code
	Length	
2	6.7	360106
3	6.63	360107
4 [2]	8.0	360108

1 Kit has adapter, one lock, and one gasket.
2 Adapter works connecting SC conduit to PVC and SC conduit to threaded steel conduit.

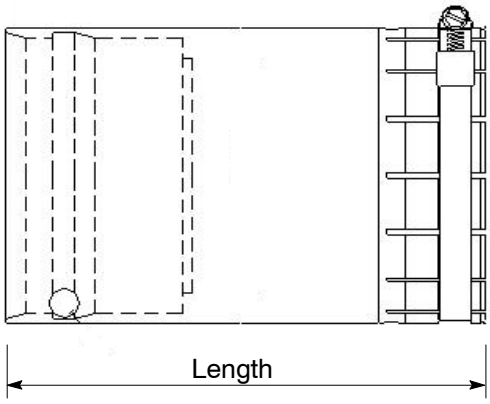

Figure 26
Key-Lock™ Adapter

Table 23 Required Rigid PVC stub out length

Conduit Size (inches)	PVC Stub Out (inches)
2	14.8
3	14.5
4	15
6	17.5

1 Stub out length needed to provide enough space for the adapter to connect rigid PVC to flexible conduit.

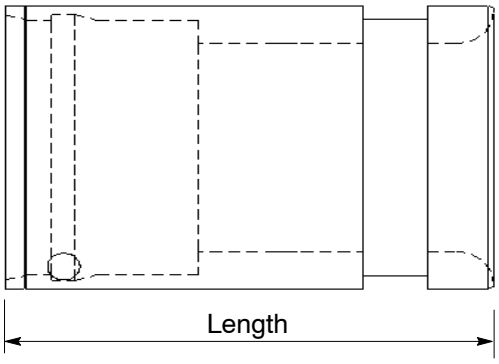

Figure 27
Key-Lock™ Bell End Adapter

Table 24 Data and Codes for Key-Lock™ Bell End Adapters Smooth-Core Bell 1

Conduit Size (inches)	Dimension (inches)	Code
	Length	
2	7.38	360109
3	7.25	360110
4 [1]	7.5	360111

1 Bell end adapter for smooth-core conduits.

Flexible (HDPE) Conduit and Fittings (continued)

Figure 28
Tapered Plugs

Table 25 Codes for Tapered Plugs

Tapered Plug (inches)	Code
2	360112
3	360113
4	360114

Table 26 Codes for Key-Lock™ Strip Replacement [1]

Key-Lock Strip (inches)	Color	Length (inches)	Bell Diameter (inches)	Code
2	Lime	12	2.75	360121
3	Lavender	16.5	4.37	360122
4	Gray	19.5	4.82	360123

[1] See Figure 19 on Page 11 for Key-Lock™ picture.

Table 27 Codes for O-Ring Gasket Seals [1]

Tapered Plug (inches)	Code
2	360125
3	360126
4	360135

[1] See Figure 19 on Page 11 O-Ring Gasket Picture.

Trench Requirements

Notes

1. Field conditions may require a minimum depth greater than shown.
2. Maintain minimum of 3-inch separation between:
   - Primary to primary conduits
   - Primary to secondary, service,and streetlight conduits.
3. Maintain minimum of 1.5-inch separation between:
   - Secondary to secondary, service, and streetlight conduits
   - Service to service, and streetlight conduits
4. Sharp turns, bends, or other irregularities in the conduit must be avoided.
5. If the bottom of a trench which will contain plastic conduit is rocky, use backfill material conforming to the requirements of Engineering Material Specification 4123. Before tamping in the area of plastic conduit, apply at least 6 inches of backfill over the top of the conduit to avoid breakage. Final backfill may then be placed in the trench and tamping employed to finish grade. In order to reduce costs, the soil originally removed from the trench should be used as backfill wherever possible (see Note 14 on Page 2).
6. Do not use salt-water sand backfill with steel conduit.
7. Other utility practices may require a greater minimum conduit separation.
8. Refer to state of California, Department of Industrial Relations; *Trench Construction Safety Orders* for trench construction requirements. These orders are issued by the Department of Occupational Safety and Health.
9. When crossing obstructions, such as shown in Figure 32 and Figure 33 on Page 18, maintain 6-inch minimum separation.

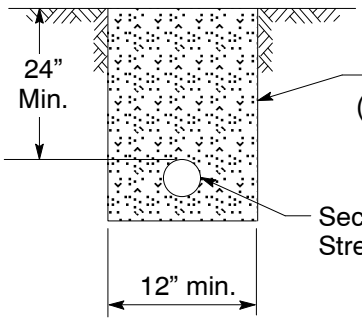

Figure 29
Secondary/Service or Streetlight Trench

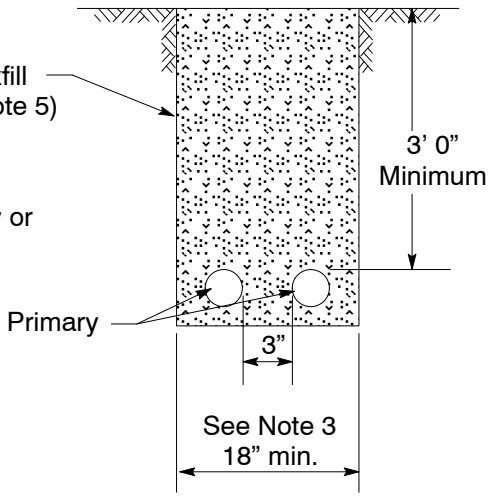

Figure 30
Primary Trench

Conduit Construction, Built-up Method

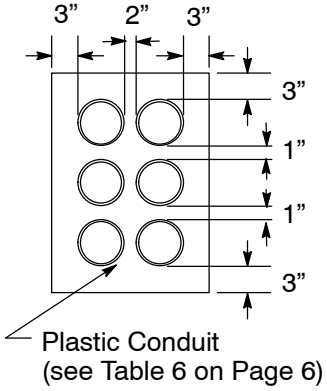

Section A-A

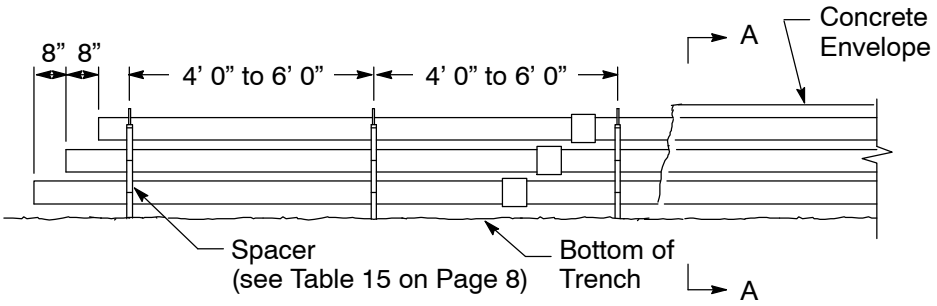

Figure 31
Typical Straight Run Installation
(5” conduit, 6-way shown)

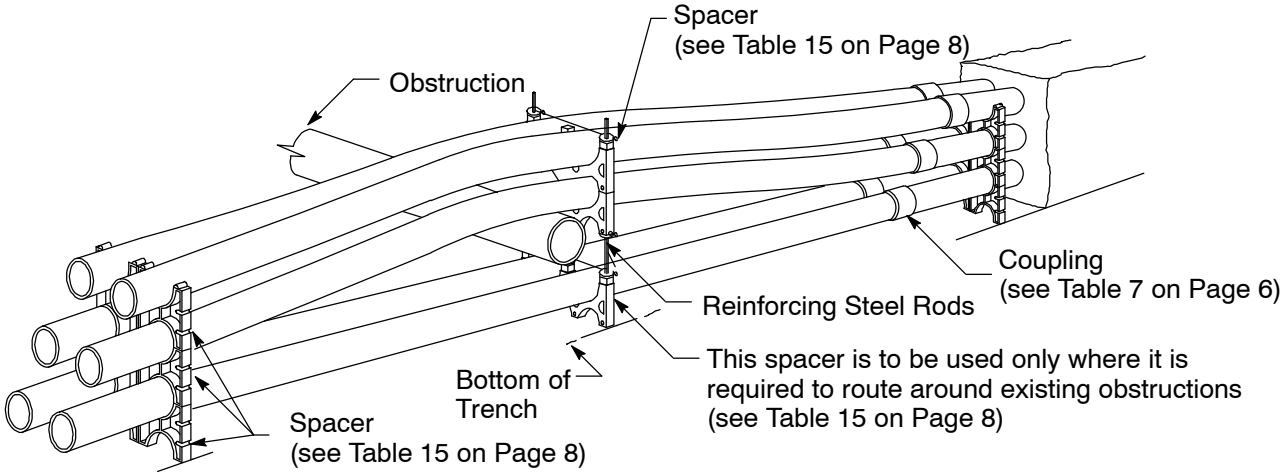

Figure 32
Typical Perspective View of
Installation Around Obstruction

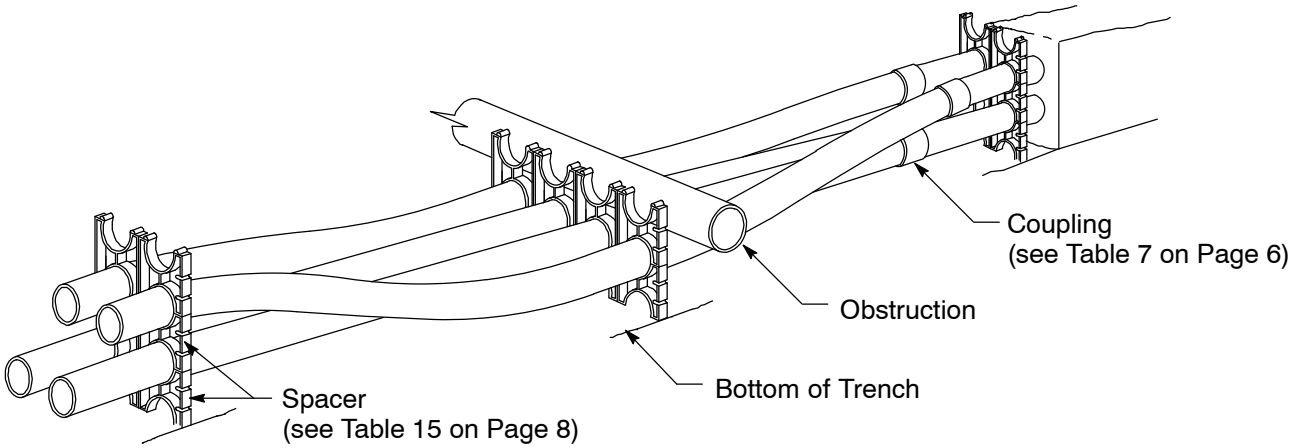

Figure 33
Typical Perspective View of
Installation Under Obstruction

Construction and Termination of Conduit Line

Notes

1. Slope the conduit sufficiently to provide adequate drainage. On level ground, slope the duct line from the center to each manhole.
2. Local city ordinances may require a minimum cover greater than PG&E's requirements of 24" for conduits containing circuits energized at 750 volts or less, and 36" for conduits containing circuits energized in excess of 750 volts. Depth may be reduced in either case if adequate mechanical protection – as defined in Section 33.6 of the Greenbook – is provided.
3. Where required, the depth of the conduit window may be increased. Where this is necessary, tie the conduit envelope concrete into the manhole reinforcing steel.
4. Vertical staggering of conduits at entrance shown in Detail A will assist in arranging for cable crossover if required.

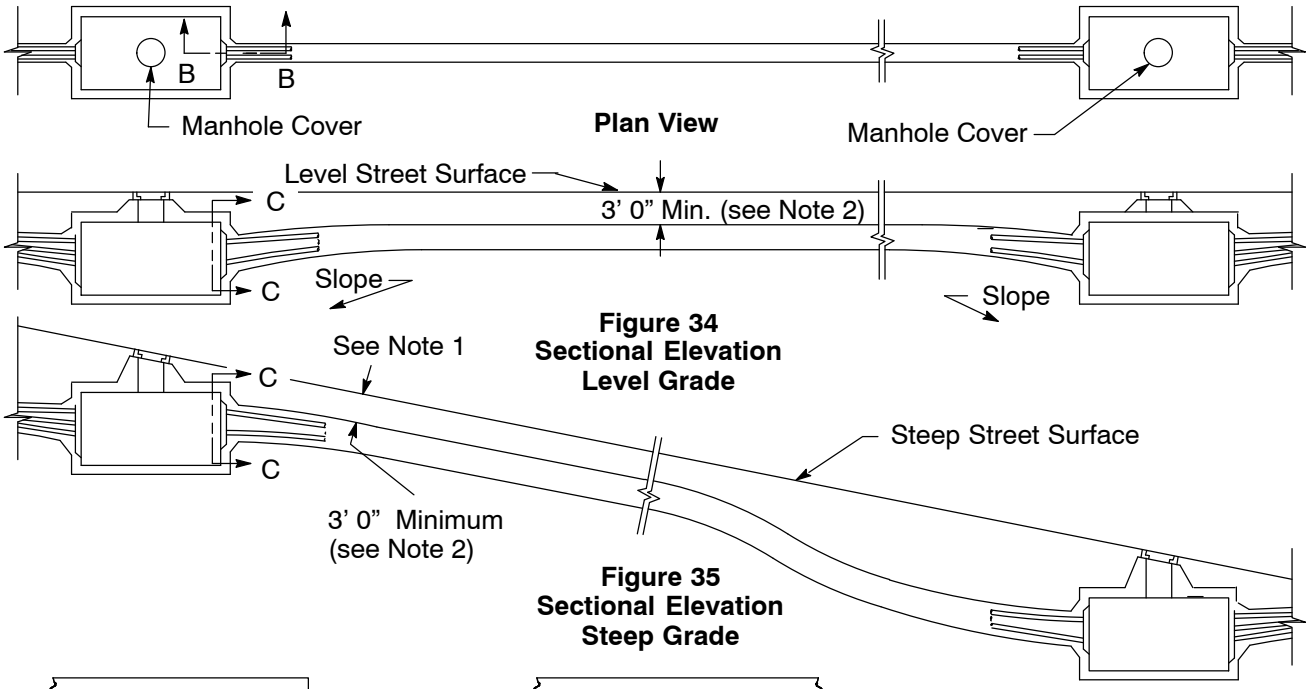

Figure 34
Sectional Elevation
Level Grade

Figure 35
Sectional Elevation
Steep Grade

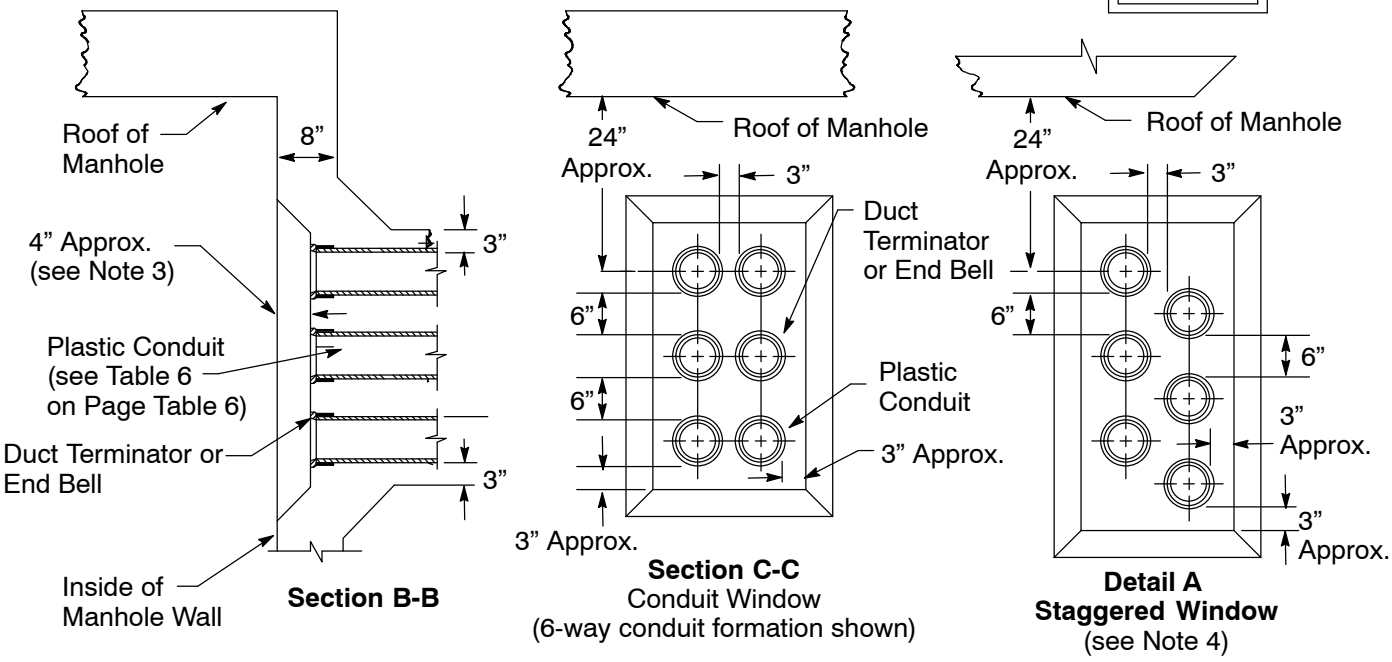

Section B-B

Section C-C
Conduit Window
(6-way conduit formation shown)

Detail A
Staggered Window
(see Note 4)

Conduit Configuration Tables

Notes

1. For conduit lines two-way and larger, install #4 reinforcing bars in all four corners of the conduit envelope. Overlap bars 15 inches and install a minimum of 3 inches from the top or bottom and 1 inch from the side of the envelope.
2. Where the width of the trench is greater than the required width of the envelope, the horizontal spacing between conduits may be increased as long as 3-inch spacing between the conduit and the outside edge of the envelope is maintained.
3. Concrete: Normal Weight
   Aggregate, ASM, C33 Uniformly Graded
   Maximum Aggregate Size: 3/4 Inch Typ
   Minimum Comprehensive Strength: f'c = 3000 pound-force per square inch (psi).

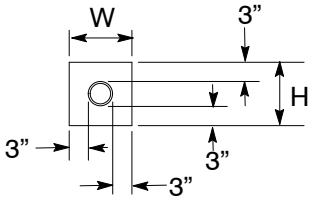

Figure 36
Single Conduit Configuration

Table 28 Dimensions for Single Conduit Configurations

Conduit		Envelope Dim.		Concrete Reqd. Cubic Yards per 100 ft. [1]
Description	Size	W	H	
Single	2”	8-1/2”	8-1/2”	1.9
	3”	9-1/2”	9-1/2”	2.3
	4”	10-1/2”	10-1/2”	2.8
	5”	11-1/2”	11-1/2”	3.4
	6”	12-1/2”	12-1/2”	4.0

[1] Quantities may vary due to variations encountered in construction.

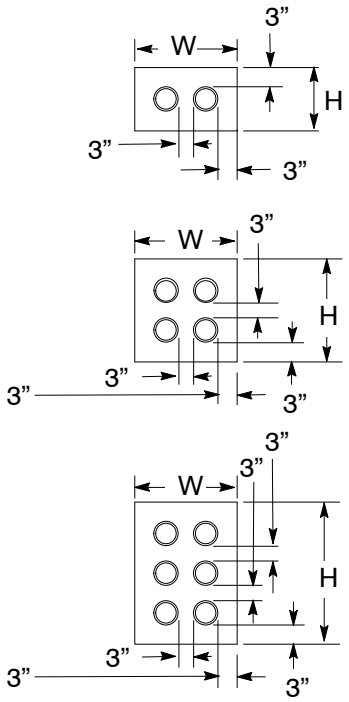

Figure 37
Two, Four, and Six-Way Conduit Configuration

Table 29 Dimensions for Multiple Conduit Configurations

Conduit		Envelope Dim.		Concrete Reqd. Cubic Yards per 100 ft. [1]
Description	Size	W	H	
2-way	3”	16”	9-1/2”	3.9
	4”	18”	10-1/2”	4.9
	5”	20”	11-1/2”	5.9
	6”	22-1/2”	12-1/2”	7.2
4-way	4”	18”	18”	8.3
	5”	20”	20”	10.3
	6”	22-1/2”	22-1/2”	13.0
6-way	4”	18”	25-1/2”	11.8
	5”	20”	29”	15.0
	6”	22-1/2”	32”	18.5
8-way	4”	18”	33”	15.3
	5”	20”	37-1/2”	19.0
	6”	22-1/2”	41-1/2”	24.0

[1] Quantities may vary due to variations encountered in construction.

Instructions for Sealing Conduit Using Foam

Notes

1. Within minutes, polyurethane foam expands to form a water and gas barrier that can be easily removed in the future.
2. Consult the manufacturer's instructions included in each kit.

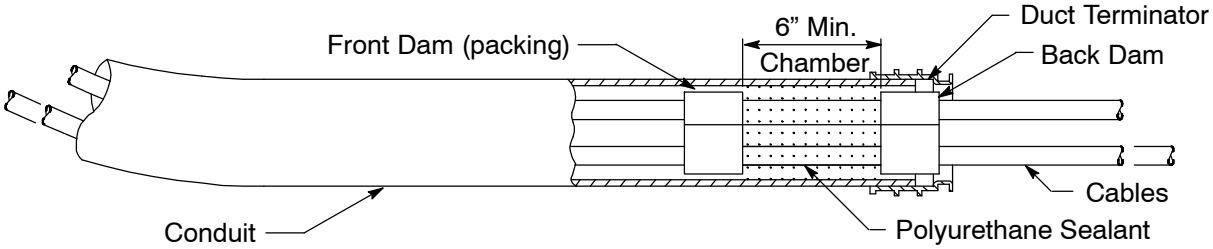

Figure 38
Details of a Polyurethane Seal

Step 1 Wipe off loose dirt and grime from cables.

Step 2 Install front dam (packing). Wind a strip of packing around each cable. Push the dam approximately 6 inches to 8 inches into the conduit. Install the back dam in the same manner as the front dam, and push it into the conduit until the dam is flush with the duct terminator.

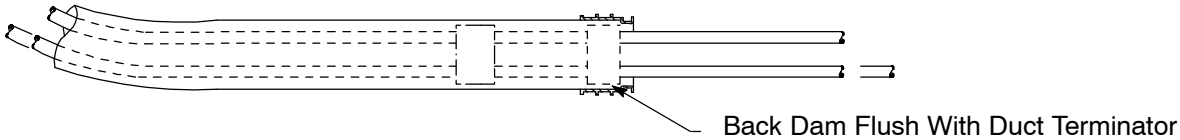

Figure 39
Front Dam Installation

Step 3 Insert the nozzle into the chamber between the dams and inject polyurethane.

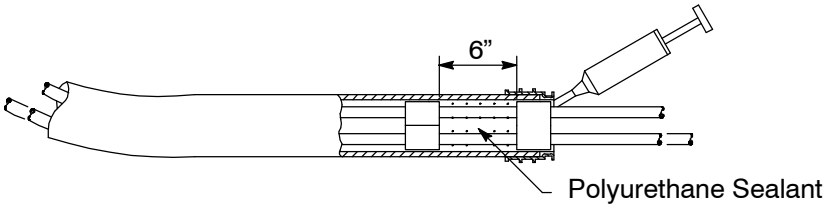

Figure 40
Nozzle Application

Table 30 Codes for Polyurethane Conduit Seal Kits [1]

Conduit Size	Code	Manufacturer	Catalog Number
2" Through 6"	019178	Dura-Line (Arnco) Hydro Seal	S-60-C6P
	490813	Polywater	FST-250KIT-PGE

[1] Kits have a 12 month shelf-life.

Instructions for Sealing Conduit Using Foam (continued)

Termination Enclosure Riser Seal Method

Step 1 Place the residential riser seal on the cable and slowly push it into the mouth of the riser conduit. Turn the Allen screw until the neoprene gasket expands to form a tight seal.

Step 2 This riser seal is to be used to seal the riser conduit at the customer's service termination enclosure only. The top of the service riser is the preferred location. Belowground use is approved if an alternative to foam is needed.

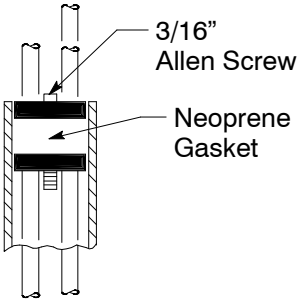

Figure 41
Termination Enclosure Riser Seal

Table 31 Codes for Termination Enclosure Riser Seals

Conduit Size	Cable Size	Code	Manufacturer and Catalog No. Environmental Solutions Cat.
2"	1/0 Triplex	019179	ESC – 103
	4/0 Triplex	019180	ESC – 403

Instructions for Sealing Conduit Using RDSS

Notes

1. Consult the manufacturer's instructions included in each kit.
2. Installation tool IT-16 is needed to install RDSS. This tool uses CO_2 cartridges. Both of these materials need to be ordered separately. See Figure 44 on Page 24 .
3. Select the appropriate RDSS size per Table 34.
4. When sealing three or more cables, the RDSS sealing clip listed on Table 34 must be used with the DRSS duct deal. One clip seals up to four cables.
5. Order RDSS as indicated on Table 35.
6. For additional reference, the attached link provides an installation video. This video was developed by the manufacturer and may not reflect the use of the company required PPE. When performing this work, please be sure to use the appropriate PPE (i.e. long sleeves, hard hat, etc.) as required by PG&E. https://www.knowledgekeeper.com/libraries/video/4c9bdcb11d19e4c5c4. After signing into Knowledge Keeper: a.) click on the library b.) Scroll down c.) Click on field : Equipment Underground d.) Scroll down until finding RDSS Video.

Normal Duct (Conduit) Size (Inches)	RDSS-45 Cable/Cable Bundle Diameter (Inches)	RDSS-60 Cable/Cable Bundle Diameter (Inches)	RDSS-75 Cable/Cable Bundle Diameter (Inches)	RDSS-100 Cable/Cable Bundle Diameter (Inches)	RDSS-125 Cable/Cable Bundle Diameter (Inches)	RDSS-150 Cable/Cable Bundle Diameter (Inches)
1-1/2	0-1.25					
2		0-1.50	0-1.00			
3				0-2.00		
4				0-3.25	0-2.75	
5 [2]					0-2.75-4.5	2.50-4.24
6 [2]						2.50-5.50
RDSS Clip Size	N/A	75	75	100	125	150

[1] One RDSS clip per RDSS seal is included in the kit.
[2] For 5" and 6" ducts with cable bundle diameters less than listed on this table or empty; an RDSS-AT/AP-150 device must be used along with RDSS. RDSS-AT/AP-150 must be ordered separately. See Figure 44.

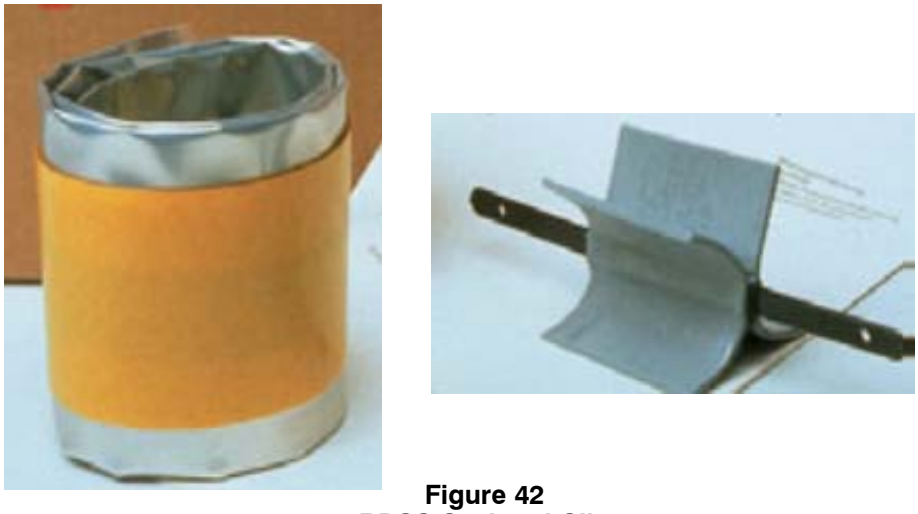

Figure 42
RDSS Seal and Clip

Instructions for Sealing Conduit Using RDSS (continued)

Figure 43
AT/AP-150 Device

Figure 44
IT-16 Installation Tool and CO_2 Cartridges

Figure 45
RDSS Installed

Instructions for Sealing Conduit Using RDSS (continued)

Table 32 Material Codes for RDSS Kits and Installation Tool

Item	Material Description	Code
1	RDSS-45-PG&E	360213
2	RDSS-60-PG&E	360214
3	RDSS-75-PG&E	360215
4	RDSS-100-PG&E	360216
5	RDSS-125-PG&E	360217
6	RDSS-150-PG&E	360218
7	RDSS-AT/AP-150 Device	360219
8	RDSS-IT-16 Tool	360220
9	Compressed CO_2 Gas Cylinders	360221

[1] Installation tool re-usable. Unless damaged, only need to order once.
[2] Only these types of cylinders are compatible with this tool.

Revision Notes

Revision 16 has the following changes:

1. Added Note 1D under General Information section on Page 1.
2. Added Note 21 under Application section on Page 2.
3. Changed swedge reducer design specification. See Figure 7 and Table 9 on Page 6.
4. Revised minimum horizontal radius for the 4” conduit. See Table 16 on Page 9.
5. Deleted obsolete materials shown on Figure 18, Page 20 on Page 11 and Figure 29 and Table 29 on Page 17.
6. Updated concrete duct dimension and material needed. See Tables 28 and 29 on Page 20.

Prepared by: ABB1

LANDSCAPE SCREEN FOR PAD-MOUNTED TRANSFORMERS

063422

Asset: Type:	Electric Distribution	**Function:**	Design and Construction
Issued By:	D. H. Mulkey (DHM3)	**Date:**	06-29-12

Rev. #03: This document replaces PG&E Document 063422, Rev. #02. For a description of the changes, see Page 12.

Purpose and Scope

This document provides a variety of landscape design ideas that may be used by the applicant to screen pad-mounted transformers.

Pad-mounted transformers are much less costly to install and maintain than subsurface transformers. While any landscaping, retaining walls, decorative walls, etc. may be installed or maintained by the applicant, landscape screening is encouraged as it helps improve the overall appearance and acceptance of pad-mounted transformers.

General Information

1. This document is intended to illustrate a variety of design concepts. They may be modified to fit a particular need or site condition.
2. The figures in this document are illustrative designs and are not intended to be construction or working drawings. Materials, quantities, and construction methods will have to be determined by the installer to meet the requirements of the particular site.
3. The addition of suitable plants to these basic designs will enhance the overall screening effect.
4. The designs illustrate screening single-phase transformers, but the same concepts may also be applied to screening three-phase, pad-mounted transformers.
5. The decorative walls, fences, etc., depicted in this document are not substitutes for any required barrier posts, fire walls, etc., that may be required by Document 051122.
6. The applicant may paint the exterior of the transformer a different color. Operating numbers and warning signs must not be obscured. If PG&E repaints or replaces the transformer, it will be green in color.

Plant Matrices

7. See Pages 7 through 12 for a plant matrix that identifies plant species suitable for screening transformers within the different climatic areas of each division.

Clearances

8. A clear, level working space of 8 feet is required in front of the transformer.
9. A clearance of 2 feet is required from the transformer pad to walls, fences, etc., as depicted in this document. The clearance may be reduced to 1 foot if the height of the wall does not exceed 2 feet and if the wall thickness does not exceed 1 foot (i.e., planter box). See Document 051122 for the clearances to building walls.
10. Gates and doors may be placed with minimal clearance in front of the transformers if the required 8-foot clearance is available with the doors or gates open.

Landscape Screen for Pad-Mounted Transformers

References	Location	Document
Location, Clearances, and Mechanical Protection Details for Pad-Mounted and Subsurface Equipment	UG-1: General/Greenbook	051122

Landscape Screen

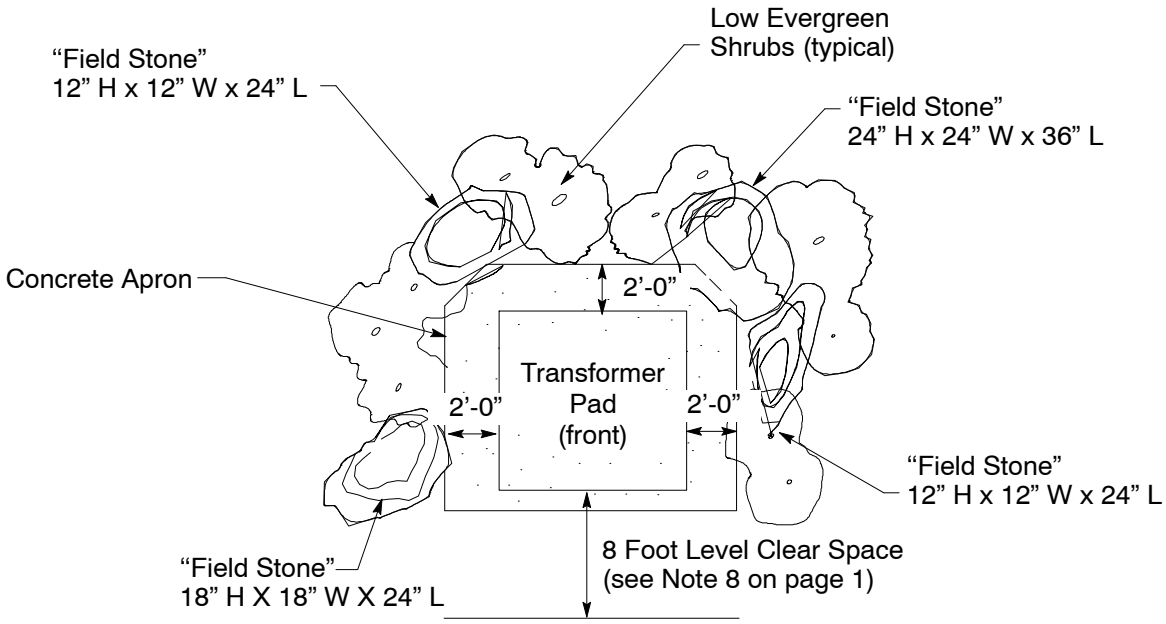

Typical Plan View

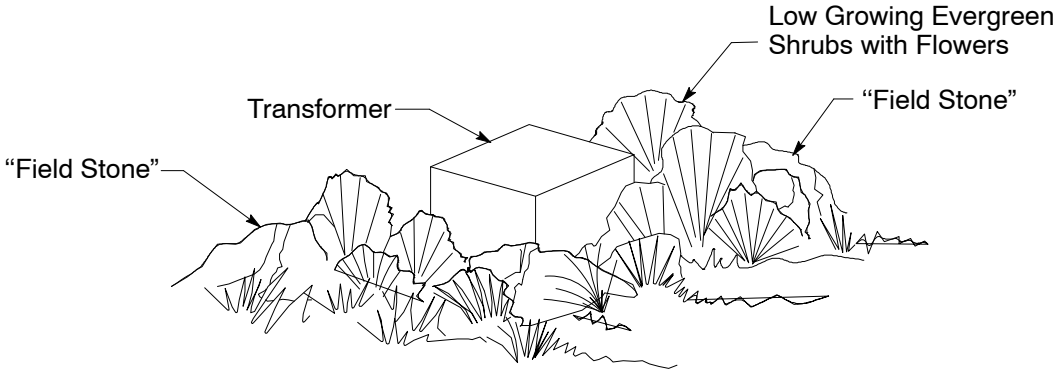

Perspective – Resident's View

Figure 1
Landscape Screen

Table 1 List of Material for Landscape Screen

Quantity	Description
4	"Sonoma Field Stones"
10-12	Low Evergreen Shrubs (5 gallon size)
1/2 Cubic Yard	Concrete (4" deep, broom finish) [1]
1/2 Cubic Yard	Gravel Sub Base (4" deep) [1]

[1] Excluding transformer pad.

Planter Wall Screen

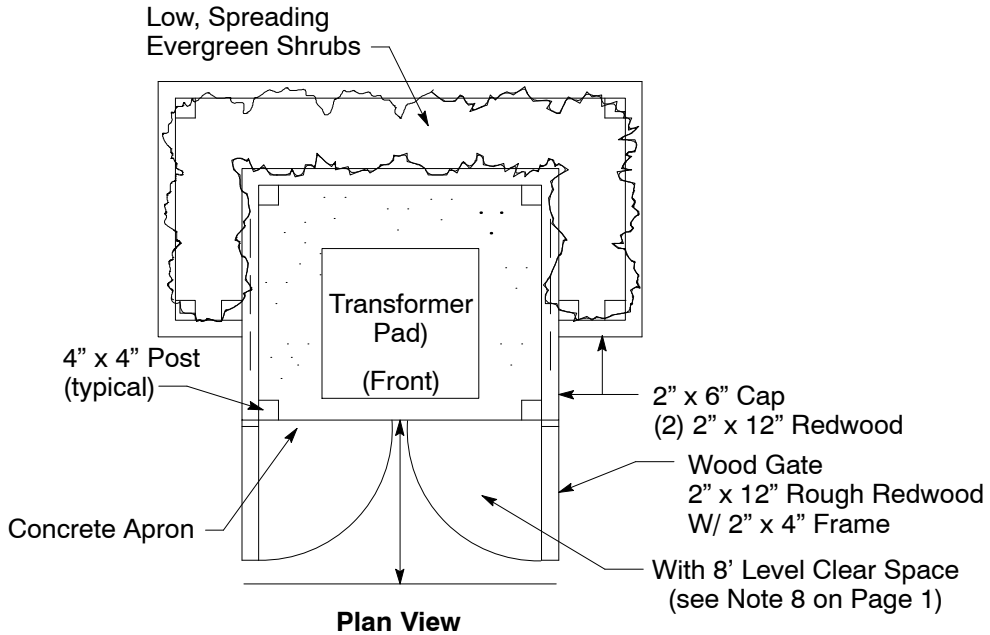

Plan View

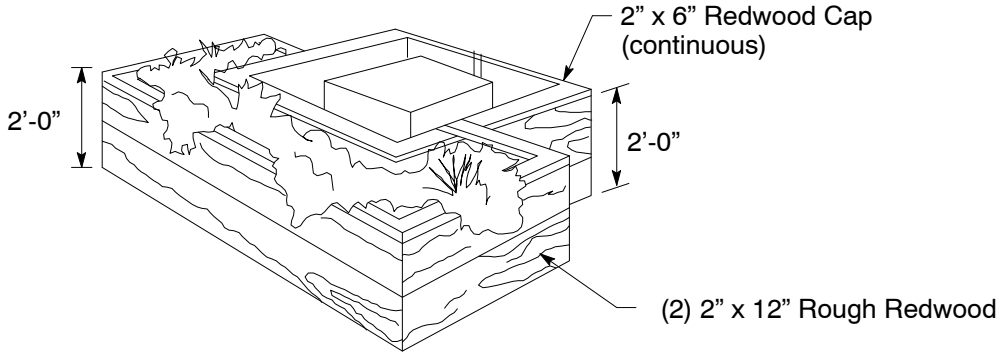

Perspective – Resident's View

Figure 2
Planter Wall Screen

Table 2 List of Materials for Planter Wall Screen

Quantity	Description
6	2" x 12" Rough Redwood (12 feet long)
4	2" x 12" Rough Redwood (8 feet long)
3	2" x 6" Rough Redwood (12 feet long)
5	4" x 4" Rough Redwood (8 feet long)
1/2 Cubic Yard	Concrete (broom finish) [1]
1/2 Cubic Yard	Gravel Sub Base (4" deep)[1]
10	Low Evergreen Shrubs (5 gallon size)
4	2" x 4" Rough Redwood (8 feet long)
1	2" x 6" Rough Redwood (8 feet long)

[1] Excluding transformer pad.

Wall for Screening

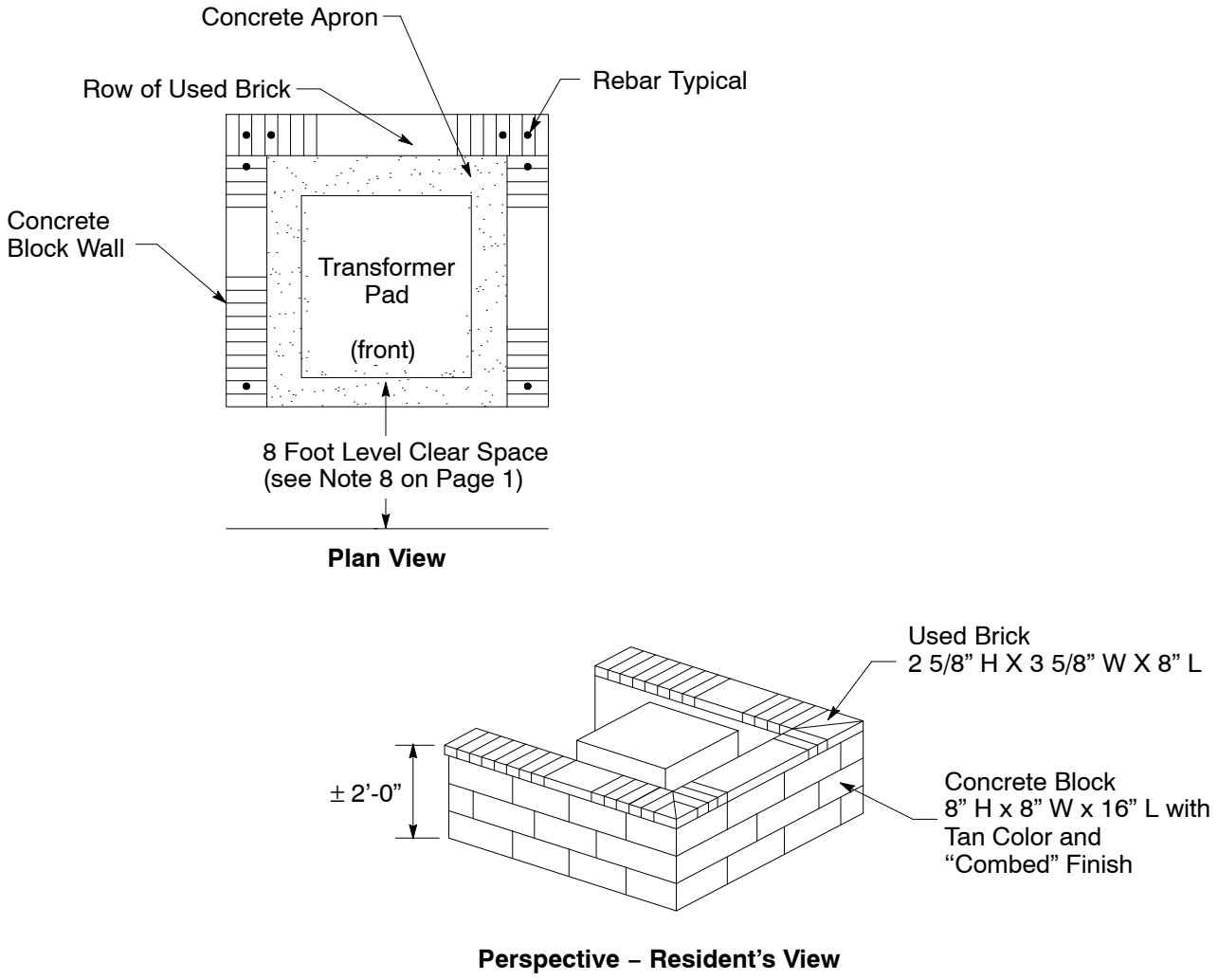

Figure 3
Wall for Screening

Table 3 List of Materials for Wall for Screening

Quantity	Description
80	Used Bricks
–	Mortar
52	Concrete Blocks (8" W x 8" H x 16" L)
1/2 Cubic Yard	Concrete (4" deep, broom finish) [1]
1/2 Cubic Yard	Gravel Sub Base (4" deep) [1]
–	1/2" x 2' Rebar for Cells at Block Corners and Edges (minimum of 8 pieces)
–	Grout Fill for Block Corners and Edges

[1] Excluding transformer pad.

Retaining Wall

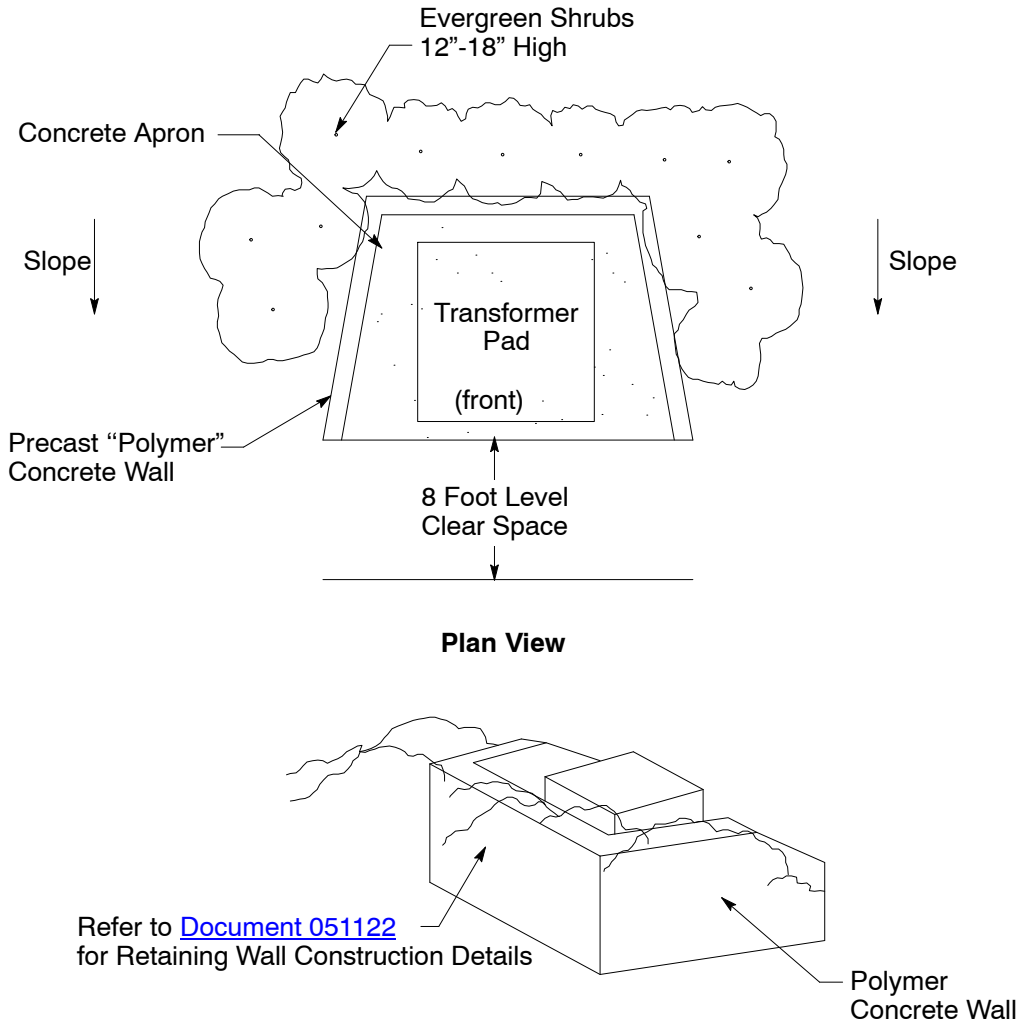

Figure 4
Retaining Wall

Table 4 List of Materials for Retaining Wall

Quantity	Description
12-14	Low, Evergreen Shrubs (5 gallon size)
19 LF	2’ Polymer Concrete Wall
1/2 Cubic Yard	Concrete (4” deep, broom finish) [1]
1/2 Cubic Yard	Gravel Sub Base (4” deep) [1]

[1] Excluding transformer pad.

Pole and Landscape Screen

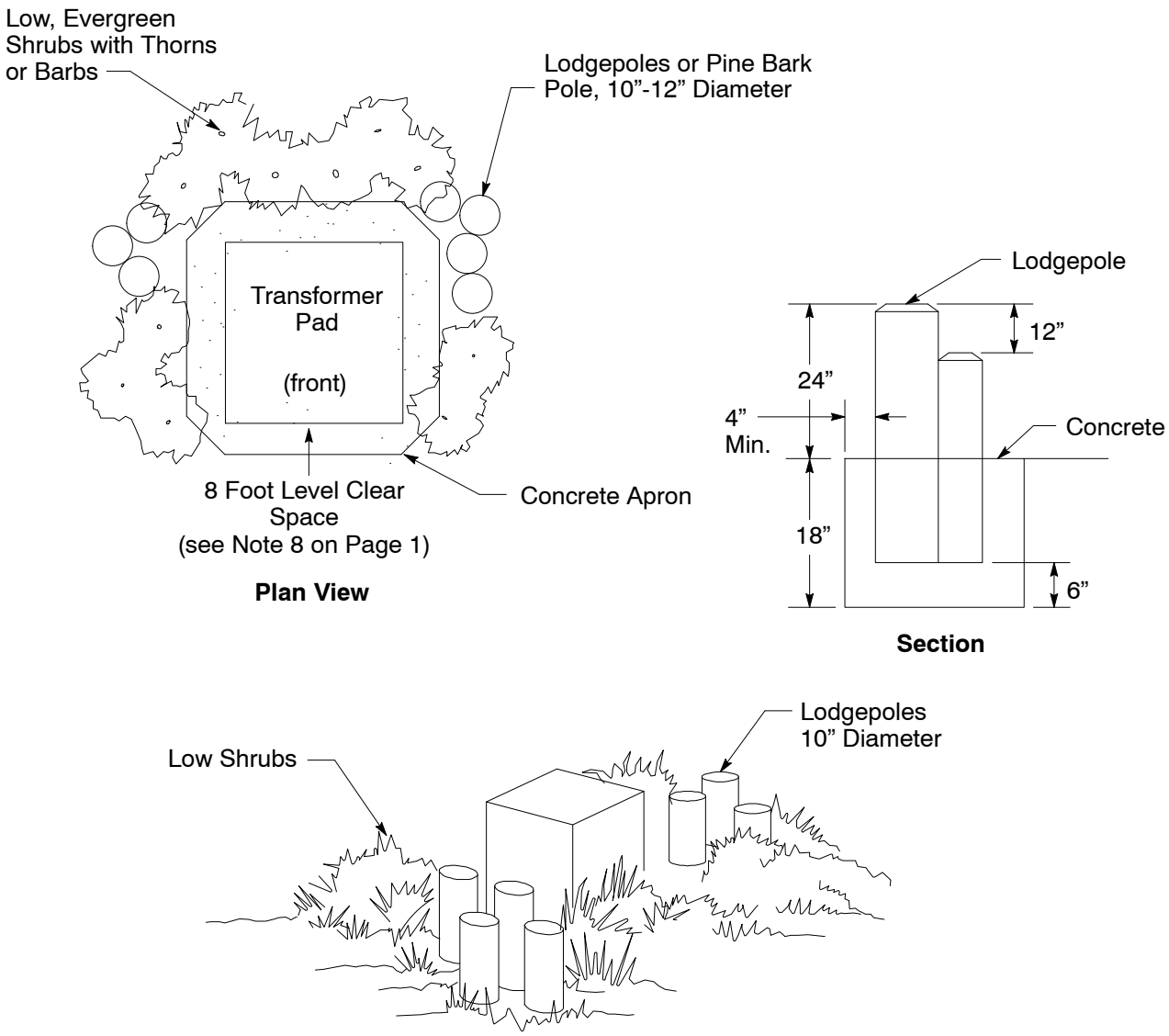

Figure 5
Pole and Landscape Screen

Table 5 List of Materials

Quantity	Description
7	10” Diameter Lodgepoles (3’-6” long)
3	10” Diameter Lodgepoles (3’-10” long)
12-14	Low Evergreen Shrubs (5 gallon size)
1/2 Cubic Yard	Concrete (4” deep, broom finish) [1]
1/2 Cubic Yard	Gravel Sub Base (4” deep) [1]

[1] Excluding transformer pad

Plant Matrix for Stockton, Yosemite, Fresno, and Kern Divisions

Notes

1. All shrubs are evergreen plants not over 5 feet at maturity.
2. All shrubs should be planted at a minimum 5 gallon size.
3. Refer to the climate zone map in the *Sunset New Western Garden Book* for the climate zone in your area.

Plants (shrubs)	Climatic Zones				
	Zone 1	Zone 7	Zone 8	Zone 9	Zone 14
	Cold Climate, High Elevation, Snow All Year, Frost All Year, High Mountain, Area	Warm Climate, Hot Summer, Mild Winters, Low Elevations, Foothill Area	Warm Climate, Cold-Air Basins In Winter, Low Elevations, Hot, Dry Summers, Cool Winter	Hot Climate, Within Thermal Belt, Warmer and Higher Elevations than Zone 8, Foothill Areas	Warm Climate, Low Elevation, Hot and Dry Summers, Mainly Inland Valley Areas
Arctostaphylos “Hookeri” (Monterey Manzanita)	–	X	–	–	X
Arctostaphylos “Emerald Carpet” (Manzanita)	–	X	–	–	X
Arctostaphylos “Uva Ursi” (Bearberry)	–	X	–	–	X
Caenothus G.H. “Yankee Point” (Yankee Point Ceanothus)	–	X	–	–	X
Nandina Domestica (Heavenly Bamboo)	–	X	X	X	X
Agapanthus Orientalis (Lily-of-the-Nile)	–	X	X	X	X
Santolina Chamaecyparissus (Lavender Cotton)	X	X	X	X	X
Cistus Hybridus (White Rockrose)	–	X	X	X	–
Cistus Purpureus (Purple Rockrose)	–	X	X	X	–
Raphiolepis I. “Coates Crimson” (Indian Hawthorn)	–	–	X	X	X
Raphiolepis I. “Enchantress” (Indian Hawthorn)	–	–	X	X	X
Eriophyllum Confertiflorum (Yellow Yarrow)	X	X	X	X	X
Juniperus Conferta (Shore Juniper)	X	X	X	X	X
Rosemarinus Officinalus (Creeping Rosemary)	–	–	X	X	X

Plant Matrix for San Francisco, Peninsula, and DeAnza Divisions

Notes

1. All shrubs are evergreen plants not over 5 feet at maturity.
2. All shrubs should be planted at a minimum 5 gallon size.
3. Refer to the climate zone map in the *Sunset New Western Garden Book* for the climate zone in your area.

Plants (shrubs)	Climatic Zones			
	Zone 14	Zone 15	Zone 16	Zone 17
	Warm Climate, Low Elevation, Hot and Dry Summers, Mainly Inland Valley Areas	Mild Climate, Coastal Influence, Cool-Air Basins in Coast Mountain Areas	Mild Climate, Coastal Influence, Within the Thermal Belt, Coastal Mountain Areas	Coastal Climate, Cool Winters and Hot Summers, Coastal Plain and Bay Shoreline
Senecio Cineraria (Dusty Miller)	X	X	X	X
Arctostaphylos “Hookeri” (Monterey Manzanita)	X	X	X	X
Caenothus G.H. “Yankee Point” (Yankee Point Ceanothus)	X	X	X	X
Cistus Hybridus (White Rockrose)	–	–	X	X
Cistus Purpureus (Purple Rockrose)	–	–	X	X
Santolina Chamaecyparissus (Lavender Cotton)	X	X	X	X
Raphiolepis I. “Coates Crimson” (Indian Hawthorn)	X	X	X	X
Raphiolepis I. “Enchantress” (Indian Hawthorn)	X	X	X	X
Pinus Mugo Mughos (Dwarf Forms)	X	X	X	X
Eriophyllum Confertiflorum (Yellow Yarrow)	X	X	X	X
Juniperus Conferta (Shore Juniper)	X	X	X	X
Rosemarinus Officinalus (Creeping Rosemary)	X	X	X	X
Cotoneaster Horizontalis (Rock Cotoneaster)	X	X	X	X
Nandina Domestica (Heavenly Bamboo)	X	X	X	X
Agapanthus Orientalis (Lily-of-the-Nile)	X	X	X	X

Plant Matrix for San Jose, Central Coast, and Los Padres Divisions

Notes

1. All shrubs are evergreen plants not over 5 feet at maturity.
2. All shrubs should be planted at a minimum 5 gallon size.
3. Refer to the climate zone map in the *Sunset New Western Garden Book* for the climate zone in your area.

Plants (shrubs)	Climatic Zones				
	Zone 7	Zone 14	Zone 15	Zone 16	Zone 17
	Warm Climate, Hot Summer, Mild Winters, Low Elevations, Foothill Area	Warm Climate, Low Elevation, Hot and Dry Summers, Mainly Inland Valley Areas	Mild Climate, Coastal Influence, Cool-Air Basins in Coastal Mountain Areas	Mild Climate, Coastal Influence Within the Thermal Belt, Coastal Mountain Areas	Coastal Climate, Cool Winters and Hot Summers, Coastal Plain and Bay Shoreline
Senecio Cineraria (Dusty Miller)	X	X	X	X	X
Arctostaphylos “Uva Ursi” (Bearberry)	X	X	X	X	X
Arctostaphylos “Hookeri” (Monterey Manzanita)	X	X	X	X	X
Arctostaphylos “Emerald Carpet” (Manzanita)	X	X	X	X	X
Cistus Hybridus (White Rockrose)	X	–	–	X	X
Cistus Purpureus (Purple Rockrose)	X	–	–	X	X
Santolina Chamaecyparissus (Lavender Cotton)	X	X	X	X	X
Raphiolepis I. “Coates Crimson” (Indian Hawthorn)	–	–	–	X	X
Pinus Mugo Mughos (Dwarf Forms)	X	X	X	X	X
Eriophyllum Confertiflorum (Yellow Yarrow)	X	X	X	X	X
Juniperus Conferta (Shore Juniper)	X	X	X	X	X
Rosemarinus Officinalus (Creeping Rosemary)	X	X	X	X	X
Cotoneaster Horizontalis (Rock Cotoneaster)	X	X	X	X	X
Nandina Domestica (Heavenly Bamboo)	X	X	X	X	X
Agapanthus Orientalis (Lily-of-the-Nile)	X	X	X	X	–

Plant Matrix for North Valley, Sierra, and Sacramento Divisions

Notes

1. All shrubs are evergreen plants not over 5 feet at maturity.
2. All shrubs should be planted at a minimum 5 gallon size.
3. Refer to the climate zone map in the *Sunset New Western Garden Book* for the climate zone in your area.

Plants (shrubs)	Climatic Zones					
	Zone 1	Zone 2	Zone 7	Zone 8	Zone 9	Zone 14
	Cold Climate, High Elevation, Snow All Year, Frost All Year, High Mountain Area	Cold Climate, Snow and Frost 50% of the Year, Mountain Areas	Warm Climate, Hot Summer, Mild Winters, Low Elevations, Foothill Area	Warm Climate, Cold Air Basins in Winter, Low Elevations, Hot, Dry Summers, Cool Winter	Hot Climate Within the Thermal Belt, Warmer and Higher Elevations than Zone 8, Foothill Areas	Warm Climate, Low Elevation, Hot and Dry Summers, Mainly Inland Valley Areas
Senecio Cineraria (Dusty Miller)	–	–	X	–	–	X
Arctostaphylos “Hookeri” (Monterey Manzanita)	–	–	X	–	–	X
Arctostaphylos “Emerald Carpet” (Manzanita)	–	–	X	–	–	X
Euryoes Pectinatus (Desert Daisy)	–	–	–	–	–	X
Juniperus Conferta (Shore Juniper)	X	X	X	X	X	X
Santolina Chamaecyparissus (Lavender Cotton)	X	X	X	X	X	X
Cistus Hybridus (White Rockrose)	–	–	X	–	X	X
Cistus Purpureus (Purple Rockrose)	–	–	X	–	X	X
Eriophyllum Confertiflorum (Yellow Yarrow)	X	X	X	X	X	X
Agapanthus Orientalia (Lily-of-the-Nile)	–	–	X	X	X	X

Landscape Screen for Pad-Mounted Transformers

Plant Matrix for Diablo, Mission, and East Bay Divisions

Notes

1. All shrubs are evergreen plants not over 5 feet at maturity.
2. All shrubs should be planted at a minimum 5 gallon size.
3. Refer to the climate zone map in the *Sunset New Western Garden Book* for the climate zone in your area.

Plants (shrubs)	Climatic Zones				
	Zone 7	Zone 14	Zone 15	Zone 16	Zone 17
	Warm Climate, Hot Summer, Mild Winters, Low Elevations, Foothill Area	Warm Climate, Low Elevation, Hot and Dry Summers, Mainly Inland Valley Areas	Mild Climate, Coastal Influence, Cool-Air Basins in Coastal Mountain Areas	Mild Climate, Coastal Influence Within the Thermal Belt, Coastal Mountain Areas	Coastal Climate, Cool Winters and Hot Summers, Coastal Plain and Bay Shoreline
Senecio Cineraria (Dusty Miller)	–	X	X	X	X
Arctostaphylos “Hookeri” (Monterey Manzanita)	X	X	X	X	X
Euryops Pectinatus (Desert Daisy)	–	X	X	X	X
Cistus Hybridus (White Rockrose)	X	–	–	X	X
Cistus Purpureus (Purple Rockrose)	X	–	–	X	X
Santolina Chamaecyparissus (Lavender Cotton)	X	X	X	X	X
Raphiolepis I. “Coates Crimson” (Indian Hawthorn)	–	X	X	X	X
Raphiolepis I. “Enchantress” (Indian Hawthorn)	–	X	X	X	X
Pinus Mugo Mughos (Dwarf Forms)	X	X	X	X	X
Ceanothus G.H. “Yankee Point” (Yankee Point Ceanothus)	X	X	X	X	X
Juniperus Conferta (Shore Juniper)	X	X	X	X	X
Cotoneaster Horizontalis (Rock Cotoneaster)	X	X	X	X	X
Nandina Domestica (Heavenly Bamboo)	X	X	X	X	X
Agapanthus Orientalis (Lily-of-the-Nile)	X	X	X	X	X

Landscape Screen for Pad-Mounted Transformers

Plant Matrix for North Coast, and North Bay Divisions

Notes

1. All shrubs are evergreen plants not over 5 feet at maturity.
2. All shrubs should be planted at a minimum 5 gallon size.
3. Refer to the climate zone map in the *Sunset New Western Garden Book* for the climate zone in your area.

Plants (shrubs)	Climatic Zones						
	Zone 1	Zone 2	Zone 7	Zone 14	Zone 15	Zone 16	Zone 17
	Cold Climate, High Elev. and Snow All Year, Frost All Year, High Mountain Areas	Cold Climate, Snow and Frost 50% of the Year, Mountain Areas	Warm Climate, Hot Summers, Mild Winters, Low Elevations, Foothill Areas	Warm Climate, Low Elevation, Hot and Dry Summers, Mainly Inland Valley Areas	Mild Climate, Coastal Influence, Cool-air Basins in Coast Mountain Areas	Mild Climate, Coastal Influence Within the Thermal Belt, Coastal Mountain Areas	Coastal Climate, Cool Winters and Hot Summers, Coastal Plain and Bay Shoreline
Senecio Cineraria (Dusty Miller)	–	–	X	X	X	X	X
Arctostaphylos “Hookeri” (Monterey Manzanita)	–	–	X	X	X	X	X
Arctostaphylos “Emerald Carpet” (Manzanita)	–	–	X	X	X	X	X
Ceanothus G.H. “Yankee Point” (Yankee Pt. Ceanothus)	–	–	X	X	X	X	X
Euryops Pectinatus (Desert Daisy)	–	–	–	X	X	X	X
Juniperus Conferta (Shore Juniper)	X	X	X	X	X	X	X
Santolina Chamaecyparissus (Lavender Cotton)	X	X	X	X	X	X	X
Cistus Hybridus (White Rockrose)	–	–	X	–	–	X	X
Cistus Purpureus (Purple Rockrose)	–	–	X	–	–	X	X
Mahona Aquifolium “Compacta” (Oregon Grape)	X	X	X	X	X	X	X
Raphiolepis I. “Coates Crimson” (Indian Hawthorn)	–	–	X	X	X	X	X
Pinus Mugo Mughos (Dwarf Forms)	X	X	X	X	X	X	X

Revision Notes

Revision 03 has the following changes:

1. Updated heading on Page 1 and reference on Page 2.

Prepared by: ABB1

METHODS AND REQUIREMENTS FOR INSTALLING RESIDENTIAL UNDERGROUND ELECTRIC SERVICES 0 – 600 V TO CUSTOMER-OWNED FACILITIES

063927

Asset Type:	Electric Distribution	**Function:**	Design
Issued by:	Lisseth Villareal (LDV2)	**Date:**	07-01-16

Rev. #20: This document replaces PG&E Document 063927, Rev. #19. For a description of the changes, see Page 4.

This document is also included in the following manual:

- *Electric and Gas Service Requirements (Greenbook)*
- *Electric Design Manual*

Purpose and Scope

This document shows the methods and requirements for installing PG&E-owned, underground service cables in customer-owned, residential, terminating facilities. See Document 058817 for terminating underground services.

General Information

1. Underground electric service laterals will normally be installed in a joint trench with natural gas and communication service facilities.
2. To determine the most satisfactory meter location, PG&E should be contacted for requirements while the building is in the planning stage.
3. When it is necessary to install a service 75 feet or longer, the applicant must contact PG&E before ordering the service riser, conduit, or termination enclosure. If the service riser and/or conduit specified in Table 2 on Page 3 of this document will not accept the cable required to meet flicker and/or voltage drop requirements, a larger conduit must be installed. This could require the installation of a larger termination enclosure.
4. The installation of a splice box may be required whenever cable pulling tensions may be exceeded or a change in cable size or conduit is required. The applicant must contact the local PG&E office to determine the requirements.

Residential Services Information

5. A “residential service” is a service supplying a single- or multi-metered residential building. This document addresses services through 800 amp, single-phase. For three-phase residential services or services larger than 800 amps, see Document 063928.
   A. Standard voltage for single metered residential building is 120/240 V.
   B. Single -phase, 120/208 V services for multi-metered residential building require full-sized neutral.
6. Residential includes mobile homes installed on California state-approved foundation systems in locations other than mobile home parks.
7. Conduit is required for residential services, including multi-metered residential buildings.
8. The applicant shall provide the trench, conduit, and backfill in accordance with Electric Rule 16 and PG&E requirements. PG&E will furnish and install the service cables and make the connection at the point of service delivery in the applicant’s service termination enclosure.

   Qualification of material for use as backfill is the responsibility of the job foreman or, in the case of contract work, the inspector or their designee. A visual inspection of the material is sufficient for evaluation of the material. The source of the backfill, native or import, is immaterial to the suitability of the backfill for use in the trench. In new construction areas, the developer may have a soils report available, which will assist in determining if import backfill is necessary.
9. Conduit type for PG&E service conductors, on or under the applicant’s building, shall be UL PVC Schedule 40 or better. Schedule 40 shall not be used in locations where it would be subject to physical damage. To avoid cable insulation damage, the ends of conduits shall be provided with a suitable fitting, such as a bushing, nipple, hub, cable protector, or end bell.

   Note: Conduits shall not pass under or through one building to supply adjacent buildings.

10. Potential water intrusion into service conduits and meter termination facilities.
    A. Water intrusion into service conduits and meter termination facilities may occur if the source side of the service facilities (e.g., secondary splice box) is at an elevation greater than the meter termination facilities.
    B. CPUC General Order 128, Rule 31.6 requires "Lateral ducts for services to buildings, through which water may enter buildings, shall be plugged or sealed."
    C. When the intrusion of water can reasonably be expected, as identified above, the following actions are required:
        (1) PG&E is responsible for sealing the conduit at the meter termination facilities as shown in Document 062288. If the meter termination facilities are significantly lower than the source side facilities, then the conduit should be sealed at both ends. The Rayflate Duct Sealing System (RDSS) conduit sealing system can be ordered for this purpose. Document 062288.
        (2) The applicant is responsible for providing a means to prevent the accumulation of excess water or water pressure in the service conduit system. This is accomplished by installing a splice box at the base of the riser to the meter panel, or at a maximum of 6 feet away from the meter panel along the service run.
11. Prior to cable installation, all conduits shall be proven free and clear by means of a mandrel or other methods acceptable to PG&E. A polyester flat pulling tape, white with sequential footage markings every foot, 2,500 minimum tensile strength, and approved by PG&E (Code 560154), shall be installed in all conduits and attached to an end cap (see Document 063928).

Upgraded Panel

12. For upgraded panels where the new specified size of service conductor will fit in the existing conduit, it is not necessary to upgrade the conduit to the currently specified size for the new panel if both of the following are met:
    A. The maximum fill ratio is not exceeded.
    B. The calculated cable pulling tensions along the conduit route is within limits of the new cable.
13. If the new panel is able to accommodate it, the existing service conductor may be reused provided it meets the load, voltage drop, and flicker requirements of the new load. If the service conductor size must be upgraded, the existing conduit must be proofed with a mandrel.
14. Notes 12 and 13 do not apply to the following conditions:
    A. Direct buried or Cable-In-Conduit (CIC) service cables. Direct buried and CIC service cables need to be replaced with approved service cable and installed in approved service conduit.
    B. Upgraded electric meter panels that are within 36 inches of the gas service riser. The clearance requirements in Greenbook Section 5.4.3., "Meter Set Clearance Requirements" must be met for upgraded and relocated meter panels.

Cover

15. A minimum of 24 inches of cover for secondary (0 - 750 V) electric service, or 36 inches minimum cover for primary (over 750 V) is required. Cover is the distance from the outer surface of an underground facility to the top of the final grade. The actual trench depth will be greater (approximately 30 inches or 42 inches minimum respectively) to accommodate the underground facility, bedding, enclosures, riser sweeps, and joint trench installations with other utilities.

Temporary Service

16. The policy of using permanent service panels to supply temporary power is expanding. Schedule 40 or 80 PVC riser conduit may be damaged by staples and nails, and this has resulted in damage to service cables. Therefore, for those locations where cable will be installed or that will be energized prior to completion of the wall, the conduit shall be Schedule 40, rigid steel conduit, to protect the service cables from damage caused by siding nails, etc. Refer to Greenbook Section 5.9.1., "Temporary Service Using Permanent Service Panels".

References	Location	Document
Terminating Underground Electric Services 0–600 Volts in Customer-Owned Facilities	UG-1: Services/Greenbook	058817
Underground Conduits	UG-1: Conduits/Greenbook	062288
Methods and Requirements for Installing Commercial Underground Electric Services 0–600 Volts to Customer-Owned Facilities	UG-1: Services/Greenbook	063928

Table 1 Service Conduit Types Approved for Underground Application

Type	Specification [1] (must be marked on conduit)
PVC, DB 120 [2]	ASTM F512, DB 120, Cell Class 12164B or 12264B
Co-extruded Cellular Core PVC, DB 120	ASTM F512, DB 120, Cell Class 12254B
Hot-Dip, Galvanized, Rigid Steel	ANSI Spec. C80.1
PVC, Co-extruded Cellular Core PVC, Schedule 40 or 80	UL 651

1 The entire "conduit system" shall meet the specifications listed above. The conduit system includes conduits, conduit bends, conduit fittings or couplings and all related components (e.g., end bells and cable protectors) that are needed to install PG&E cables and conductors.

2 This type of conduit is not approved for 2" conduit.

Table 2 Cable and Conduit Requirements for Residential Services

Service Equipment Rating (amps) [1]	Conduit Size and Number [2]	Minimum Vertical Radius	Minimum Horizontal Radius	Aluminum Cable Required to Serve Maximum Load AWG or kcmil	
				(Per Phase)	Neutral
0–125	1–2"	24"	36"	1–1/0	1–#2
126–225	1–3"	24"	36"	1–4/0	1–1/0
320 [3]	1–3"	24"	36"	1–350	1–4/0
400 [4]	1–4"	36"	36"	1–750	1–4/0
600 [4]	2–3"	24"	36"	2–350	2–4/0
800 [4]	2–4"	36"	36"	2–750	2–4/0

1 Service rating shall be the termination section, pullcan, service section, or main service switch continuous current rating, whichever is greater.
2 See Note 3 on Page 1 for size and distance limitations, Note 9 on Page 1 for conduit type allowed on or within buildings, and Table 1 above for conduit type allowed underground.
3 Require manual bypass facilities.
4 Require transformer rated meter.
5 Continuous current rating.

Service Installation

Note

1. A 90° manufactured sweep is required to be installed to meet trench grade. The conduit end must extend at least 12 inches beyond the foundation. Install the sweep in the direction of the service trench. If a deeper trench is required, the sweep must extend to the same depth as the conduit in the trench. A minimum of 24 inches of cover must be maintained.

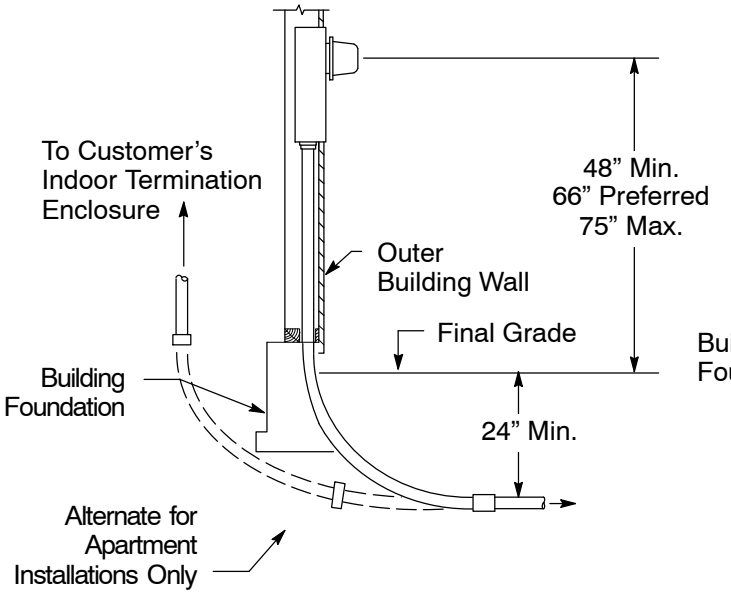

Figure 1
Recessed-Mounted Service Termination Enclosure

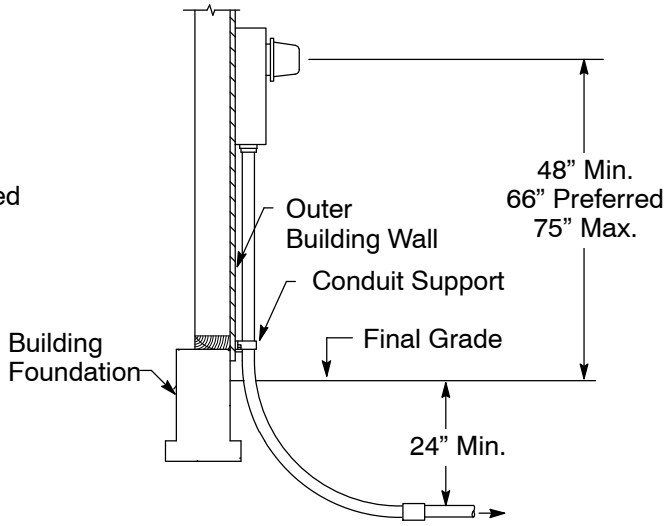

Figure 2
Surface-Mounted Service Termination Enclosure

Revision Notes

Revision 20 has the following changes:

1. Revised Note 10C(1) on Page 2.
2. Revised Notes 14 and 15 on Page 2.
3. Added Footnote 2 on Table 1 on Page 3.
4. Removed Footnote 1 and 6 and renumbered them for Table 2 on Page 3.

Prepared by: ABB1

METHODS AND REQUIREMENTS FOR INSTALLING COMMERCIAL UNDERGROUND ELECTRIC SERVICES 0 – 600 VOLTS TO CUSTOMER-OWNED FACILITIES

063928

Asset Type:	Electric Distribution	**Function:**	Design and Construction
Issued by:	Lisseth Villareal (LDV2)	**Date:**	07-01-16

Rev. #22: This document replaces PG&E Document 063928, Rev. #21. For a description of the changes, see Page 5.

This document is also included in the following manuals:

- *Electric and Gas Service Requirements (Greenbook)*
- *Electric Design Manual*

Purpose and Scope

This document shows the methods and requirements for installing PG&E-owned underground conductors in commercial buildings and multi-residential buildings.

General Information

1. This document is also included in the *Electric and Gas Service Requirements (Greenbook)* and in *Electric Design Manual*. See Document 058817 for terminating service conductors.
2. Single-phase main service switches shall not exceed 225 amps for 120/208 V services or 600 amps for 120/240 V services. Single-phase, 120/208 V multi-metered residential/commercial building services require full-sized neutrals.

Customer Requirements

3. The applicant shall provide trench and backfill as specified by PG&E, service conduit in accordance with Table 1, Table 2, and Table 4 on Pages 3 and 4 and a service termination enclosure.
4. The conduit type for PG&E's service conductors on, under, or within the applicant's building shall be as indicated below:

   A. Galvanized rigid steel or PVC coated rigid steel.

   B. UL approved Schedule 40 or 80 PVC. Schedule 40 PVC shall not be used if the conduit is located so that it is subject to physical damage. To avoid cable insulation damage, the end of the conduit shall be provided with a suitable termination fitting such as a bushing, nipple, end bell, or cable protector, etc.
   Note: Conduits shall not pass under or through one building to supply adjacent buildings.
5. State or local building codes require special conduit seals in certain locations, such as gasoline and hydrogen filling stations. If the underground service conduit runs within a 20' horizontal radius of a gas pump (from any edge of the dispenser enclosure), or within a 10' horizontal radius of an underground gas tank, the applicant shall be responsible for the requirements listed on A–C below. Similarly, if the underground service conduit runs within a 5' horizontal radius of a hydrogen cooling block, dispenser, or storage, or within 15' horizontal radius of a hydrogen compressor, the applicant shall be responsible for the requirements listed on A–C below:

   A. The type of conduit required from the meter termination point to the connection point with PG&E.

   B. The installation and maintenance of special fittings (explosion–proof) and sealing compounds at both ends.

   C. The type of cable required from the meter termination point to the connection point with PG&E.
6. Prior to cable installation, prove all conduits free and clear by means of a mandrel or other method acceptable to PG&E. A PG&E-approved polyester, flat pulling tape, white with sequential footage markings every foot, and 2,500-pound minimum tensile strength (Code 560154), shall be installed in all conduits and attached to an end cap.
7. The installation of a splice box may be required whenever cable pulling tensions may be exceeded, or a change in cable or conduit size is required. The applicant must contact the local PG&E office to determine these requirements.

8. Test bypass facilities are required for both single phase and three phase installations regardless of the panel ampacity.

PG&E Requirements

9. If PG&E service conductors are to be run in a multiple conduit system, all phases and the neutral shall be installed in each conduit that is used.
10. PG&E will furnish and install the underground service conductors and make connections in the applicant's service termination enclosure.
11. Potential water intrusion into service conduits and meter termination facilities
    A. Water intrusion into service conduits and meter termination facilities may occur if the source side of the service facilities (e.g., secondary splice box) is at an elevation greater than the meter termination facilities.
    B. CPUC General Order 128, Rule 31.6 requires "Lateral ducts for services to buildings, through which water may enter buildings, shall be plugged or sealed."
    C. When the intrusion of water can reasonably be expected, the following actions are required:
        (1) PG&E is responsible for sealing the conduit at the meter termination facilities as shown in Document 062288. If the meter termination facilities are significantly lower than the source side facilities, then the conduit should be sealed at both ends. The Rayflate Duct Sealing System (RDSS) conduit sealing system can be ordered for this purpose. See Document 062288.
        (2) The applicant is responsible for providing a means to prevent the accumulation of excess water or water pressure in the service conduit system. This is accomplished by installing a splice box at the base of the riser to the meter panel, or at a maximum of 6 feet away to the meter panel along the service run.
12. Minimum service requirements
    A. Install the number and size of conduits as shown in Table 2 and Table 3 on Pages 3 and 4, based on the main service panel rating. No more than seven 5-inch service conduits will be supplied from any one transformer.
    B. Install the number and size of conductors, as shown in Table 2 on Page 3, to meet the individual initial demand load. Take load characteristics and growth into consideration.
    C. It is permissible to install a smaller transformer and fewer conductors to serve a long term initial load with the intent of installing a larger transformer and additional conductors should future load increase occur.
    D. Always size the transformer pad to accommodate the largest transformer size necessary to serve the combined ampacity of all services. Never exceed more than seven sets of conductors per transformer.
    E. Vacant ducts, if any, will be used to serve future load increases.
13. Single main service panels fed by single transformer

    Example 1

    480 V, 4-wire, 1,600-amp rated main switch, initial demand load is 300 kVA. Install five 5-inch ducts, service size is 1,000 kcmil for phase and 350 kcmil for neutral. Only two sets of service conductors are required to meet initial loading. The remaining three ducts should be capped for future use.
14. Multiple main service panels fed by single transformer

    Example 2

    1,000-amp, 600-amp, and 400-amp mains to be served. The number of sets of conduits required are three, two, and one, respectively. A total of six conduits are needed to serve the three main switches. The three services can be served from one transformer.
15. Multiple main service panels fed by multiple transformers

    Example 3

    2,000-amp and 1,000-amp mains to be served. The number of sets of conduits required are seven and three respectively. A total of ten conduits are needed to serve the two main switches. The two services cannot be served from one transformer; they must be served from individual transformers.

Upgraded Panel

16. For upgraded panels where the new specified size of service conductor will fit in the existing conduit, it is not necessary to upgrade the conduit to the currently specified size for the new panel if both of the following are met:
    A. The maximum fill ratio is not exceeded.
    B. The calculated cable pulling tensions along the conduit route is within limits of the new cable.

17. If the new panel is able to accommodate it, the existing service conductor may be reused provided it meets the load, voltage drop, and flicker requirements of the new load. If the service conductor size must be upgraded, the existing conduit must be proofed with a mandrel.
18. Notes 16 and 17 on Page 2 do not apply to the following to the following conditions:
    A. Direct buried or Cable-In-Conduit (CIC) service cables. Direct buried and CIC service cables need to be replaced with approved service cable and installed in approved service conduit.
    B. This typeUpgraded electric meter panels that are within 36 inches of the gas service riser. The clearance requirements in Greenbook Section 5.4.3., “Meter Set Clearance Requirements” must be met for upgraded and relocated meter panels.

Temporary Service

19. The policy of using permanent service panels to supply temporary power is expanding. Schedule 40 or 80 PVC riser conduit may be damaged by staples and nails, and this has resulted in damage to service cables. Therefore, for those locations where cable will be installed or that will be energized prior to completion of the wall, the conduit shall be Schedule 40, rigid steel conduit, to protect the service cables from damage caused by siding nails, etc. Refer to Greenbook Section 5.9.1., “Temporary Service Using Permanent Service Panels”.

References	Location	Document
Terminating Underground Electric Services 0-600 Volts in Customer-Owned Facilities	UG-1: Services/Greenbook	058817
Underground Conduits	UG-1: Conduits/Greenbook	062288

Table 1 Service Conduit Types Approved for Underground Applications With Prior PG&E Approval

Type	Specification [1] (must be marked on conduit)
PVC, DB 120 [2]	ASTM F512, DB 120, Cell Class 12164B or 12264B
Co-extruded Cellular Core PVC, DB 120	ASTM F512, DB 120, Cell Class 12254B
Hot-Dip, Galvanized, Rigid Steel	ANSI C80.1
PVC, Co-extruded Cellular Core PVC Schedule 40 or 80	UL 651

1 The entire “conduit system” shall meet the specifications listed above. The conduit system includes conduits, conduit bends, conduit fittings or couplings and all related components (e.g., end bells and cable protectors) that are needed to install PG&E cables and conductors.
2 This type of conduit is not approved for 2” conduit.

Table 2 Cable and Conduit Requirements for Single-Phase Commercial Services

Main Service Panel Rating (amps) [1]	Conduit Size and Number	Cables Required to Serve Maximum Load			
		Aluminum		Copper	
		Per Phase	Neutral	Per Phase	Neutral
100–125	1–3”	1–1/0	1–#2	NA	NA
126–225	1–3”	1–4/0	1–1/0	NA	NA
400 [2]	1–4”	1–750	1–4/0	NA	NA
600 [2]	2–4”	2–750	2–4/0	NA	NA

1 Service rating shall be the termination section, pullcan, service section, or main service switch continuous current rating, whichever is greater. See Note 2 on Page 1 for 100-600 amp 1∅ services.
2 Require transformer rated meter.

Table 3 Cable and Conduit Requirements for Three-Phase Commercial Services [1]

Main Service Panel Rating (amps) [2]	Conduit Size and Number	Cables Required to Serve Maximum Load			
		Aluminum		Copper	
		Per Phase	Neutral	Per Phase	Neutral
100	1–3”	1–1/0	#2	NA	NA
200	1–3”	1–4/0	1–1/0	NA	NA
400	1–5”	1–750	1–4/0	NA	NA
600	2–5”	2–750	2–4/0	NA	NA
800	2–5”	2–750	2–4/0	NA	NA
1,000	3–5”	3–1,000	3–350	NA	NA
1,200 [3]	4–5”	4–1,000	4–350	NA	NA
1,600 [3]	5–5”	5–1,000	5–350	NA	NA
2,000 [3]	7–5”	7–1,000	7–350	NA	NA
2,500 [3, 4]	7–5”	NA	NA	7–1,000	7–250
3,000	Bus Duct	NA	NA	NA	NA
3,500	Bus Duct	NA	NA	NA	NA
4,000	Bus Duct	NA	NA	NA	NA

1 3,000–, 3,500–, and 4,000–amp service rated panels require using a bus duct.
2 Service rating shall be the termination section, pullcan, service section, or main service switch continuous current rating, whichever is greater.
3 Requires termination provisions (i.e., longer bolts) that allow connectors to be stacked when needed.
4 Limited to 50 feet between the transformer secondary spades and the customer’s gear connection point. For greater distances, a bus duct is to be used.

Table 4 Minimum Bend Radius for New Construction

Conduit Diameter	Vertical Radius	Horizontal Radius
2”	24”	36”
3”	24”	36”
4”	36”	36”
5”	36”	60”

Service Installation

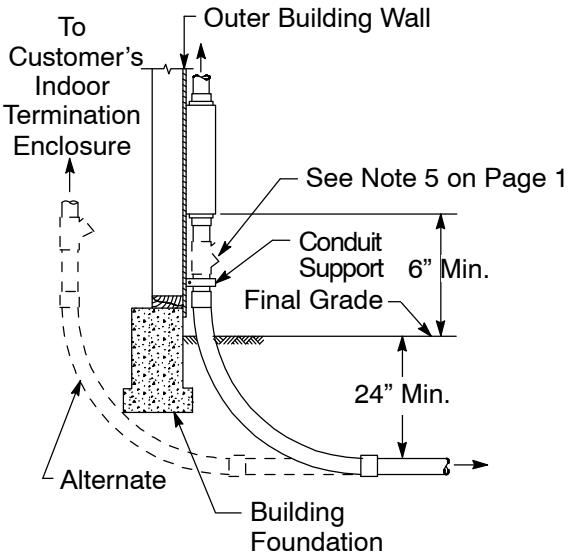

Figure 1
Surface-Mounted Service Termination Enclosure

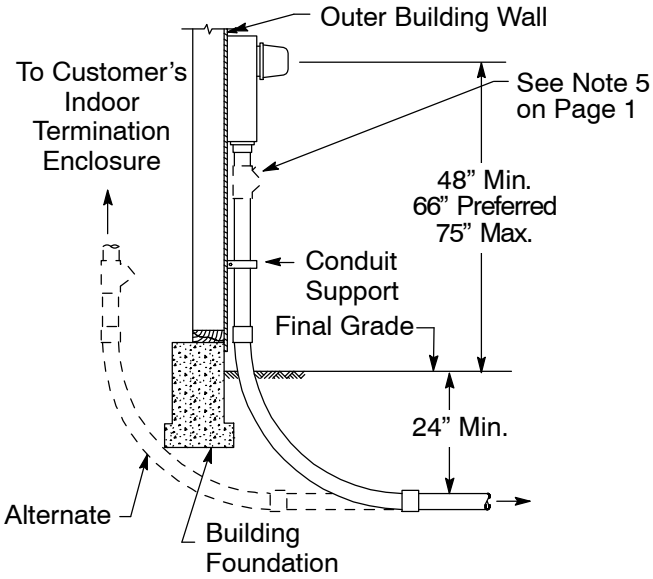

Figure 2
Surface-Mounted Combination Meter Socket Panel

Revision Notes

Revision 22 has the following changes:

1. Revised Note 5 on Page 1.
2. Revised Note 11C on Page 2.
3. Revised Notes 18 and 19 on Page 3.
4. Added Footnote 2 for Table 1 on Page 3.
5. Deleted Footnote 1 and re-numbered footnotes for Table 2 on Page 3.
6. Revised Footnotes 1 and 3 for Table 3 on Page 4.

Prepared by: ABB1

REQUIREMENTS FOR BUS DUCT ENTRANCE TERMINATION UNIT FOR USE WITH PAD-MOUNTED TRANSFORMERS

063929

Asset Type:	Electric Distribution	**Function:**	Design and Construction
Issued By:	Lisseth Villareal (LDV2)	**Date:**	07-01-14

Rev. #10: This document replaces PG&E Document 063929, Rev. #09. For a description of the changes, see Page 10.

This document is also included in the following manual:

- *Electric and Gas Service Requirements Manual* (Greenbook)

Purpose and Scope

This document provides the tools, ordering instructions, and the necessary manufacturing specifications and details for the fabrication and assembly of bus duct entrance terminations.

The function of the entrance box is to:

- Provide a means for connecting the customer's bus duct to a pad-mounted transformer.
- Permit a future, larger transformer to be installed without disturbing the existing bus duct installation.
- Reduce the shutdown time for transformer replacement. The entrance box is furnished with two removable sections to permit access to the bus duct extension connections. PG&E will supply and install the entrance box.

General Information

1. The "Bus Duct Entrance Termination Unit" is used to provide transition from a customer-provided service entrance bus duct to the low-voltage service compartment of a PG&E, pad-mounted transformer, for services of 3,000 to 4,000 amps.
2. Construction
   A. The unit's construction design shown in this document shall comply with the Western Underground Committee's Guide 2.13, latest revision, for tamper-resistant, pad-mounted, equipment enclosures.
   B. Each top and side cover shall latch and securely self-lock at a minimum of three points, when the unit is assembled. All sharp external corners, edges, and joints shall be smoothed to prevent injury or damage to clothing.
   C. The edges, seams, and joints shall be made and formed to provide a close-fitting mating surface. Exposed welding on the outside surface of the unit(s) shall be a continuous bead, machined and ground flush.
   D. All metal work shall be cleaned free of dirt, oils, and rust, and immediately painted, both inside and outside, with one coat of suitable, rust-inhibiting primer, approximately 1.5 mils thick when dry.
   E. The interior and exterior of the housing shall be finished with one or more coats of Green Munsel, No. 5.5gy, 2.76/2.1 (PG&E No. 610 Green) paint. The total dry film thickness shall not be less than 2 mils (the total paint thickness, including primer, not less than 3.5 mils when dry).
   F. Approximately a half pint of "touch-up" paint (preferably in an aerosol spray can) shall be included and shipped with each unit (attached inside the unit to the cable support block).
3. Methods of Serving Large Commercial Customers
   A. Main Service Rating 201 Through 2,500 Amps: The approved method is by underground cable in customer-installed conduit (refer to Document 063928 for details).
   B. Main Service Rating 3,000 Through 4,000 Amps: The approved method is a PG&E-owned and installed bus duct entrance box attaching to customer-owned and installed bus duct that is a minimum of 30" long.
4. Note: Bus ducts shall only be connected to pad-mounted transformers with a minimum 30-inch deep cabinet and a secondary terminal height of 46 inches from the bottom of the cabinet (Style IIE-LB and IIF, 300 kVA and larger).

5. It is recommended to install pad-mounted transformer, bus duct entrance termination box, and customer bus duct entrance box on the same monolithic pad to avoid soil settlement issues. See Document 043818 or Document 045292 for transformer pad dimensions.
6. Service Connection

   The customer shall provide a minimum of 30 inches of bus duct, including flanged ends, elbows, and straight sections from the bus duct entrance terminating end at the side of the pad-mounted transformer (top entry is not permitted). The customer shall also supply tie straps for collecting like phases, all necessary bus extensions, and bracing for bus extensions, as required. The bus duct shall enter the transformer entrance box in a “horizontal” configuration. PG&E will make the connections from the bus extensions to the transformer secondary terminals, using insulated, flexible, copper conductor provided by PG&E.
7. To provide a water tight transition between the components, the bus duct (flanged ends provided by the customer) must match the dimensions of the transition box assembly and flange plate (Detail A on Page 8).
8. Transformer Bus Duct Cover Plate

   A cover used to close off the bus duct entrance hole left in a transformer when it is removed or replaced. This plate bolts into the same bolt holes used for the bus duct entrance termination box and can be installed locally so that the transformer can be reused without sending it to Emeryville to have the opening covered (Code 180203).

References	Location	Document
Connectors for Insulated Cables Underground Distribution Systems	UG-1: Connectors/Greenbook	015251
Concrete Pads for Radial-Style, Three-Phase Pad-Mounted Transformers	UG-1: Transformers	043818
Installation of Loop-Style, Three-Phase, Pad-Mounted Transformers	UG-1: Transformers	045291
Concrete Pad for Three-Phase, Loop-Style, Pad-Mounted Transformers	UG-1: Transformers/Greenbook	045292
Terminating Underground Electric Services 0–600 Volts in Customer-Owned Facilities	UG-1: Services/Greenbook	058817
Methods and Requirements for Installing Commercial Undergroung Electric Services 0-600 Volts to Customer-Owned Facilities	UG–1: Sevices/Greenbook	063928

Installation

Notes

1. Method of installation (see Figure 1 on Page 4) - The location of the edge of the pad must first be established by consultation between PG&E and the building architect or contractor. The bus duct termination end flange and flange plate shall be located such as to permit its connection to the bus duct entrance termination box at a point 23 inches to 24 inches from the edge of the pad. The vertical centerline of the bus duct entrance termination box shall be located 23 inches from the front edge of the transformer pad (see Figure 1, Section A-A and Figure 2, Section B-B on Page 4). Additionally, there must be a minimum of 54 inches straight length between the edge of the pad and any obstruction (joint, bend, support, apparatus, wall or building, etc) in the bus duct to accommodate the 48” long bus duct entrance termination box provided by PG&E.

   These dimensions will accommodate all style IIB, IIC, IIE, IIF, IIG, and IIH transformers used in bus applications.
2. Bus duct flange plate (see Detail A on Page 8) - A removable bus duct end flange plate shall be provided by the customer at the transformer end of the bus duct. This plate shall not be drilled. PG&E will locate and drill 1/2-inch diameter holes in the flange plate to match the square holes in the adjustable end flange of the entrance box.
3. Transformer cabinet bus duct cutout - The horizontal centerline of the bus duct termination box in the side of the transformer shall be approximately 24 inches above the top of the pad. The cutout dimensions and drilling for bolt holes must match the dimensions and drilling of the entrance box, as determined in the field. A template is provided in the kit to help in positioning the flanged end and locating the mounting holes.
4. Bus duct connections in transformer (see Figure 3 on Page 5)

   A. For two and three bars per phase, the customer shall provide tie straps bolted across like phases where they enter the transformer entrance box.

Installation (continued)

B. PG&E will provide the flexible copper conductor and spade connectors necessary to make the connection between the secondary spades of the transformer and the customer's bus duct.

C. The customer shall furnish the tie bars (Section F-F on Page 8) and spacers (Detail D on Page 8) with the bus duct. The bus duct must be in a horizontal configuration when entering the entrance box.

D. PG&E will provide the necessary spade supports (see Document 045291) for the protection of the transformer (supports are not part of a kit).

5. Feeder bus duct and entrance box supports - Feeder bus duct supports (where necessary) are required to be installed by the customer. The entrance box shall not be used as a bus duct support. PG&E will provide and install a support (supports are not part of a kit) for the bus duct entrance termination box, as shown in Figure 1 and Figure 2 on Page 4, and Detail F on Page 9.

Requirements for Bus Duct Entrance Termination Unit for Use With Pad-Mounted Transformers

Installation (continued)

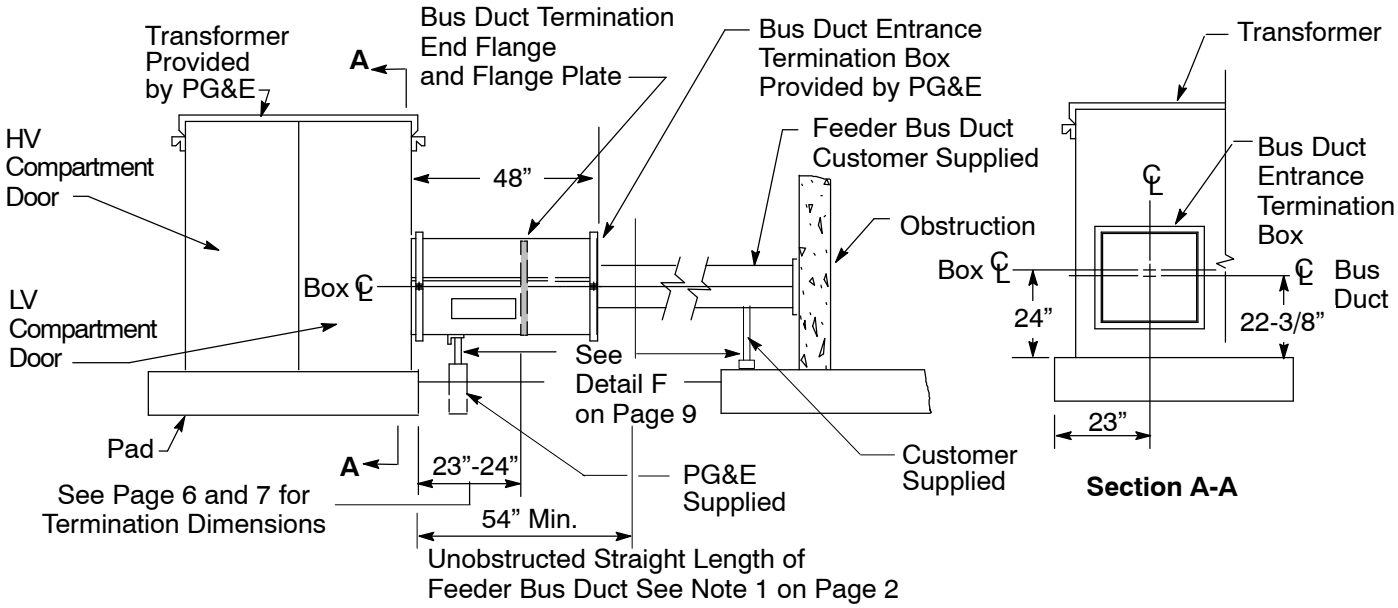

Figure 1
Typical Bus Duct Assembly for Largest Pad-Mounted Transformer

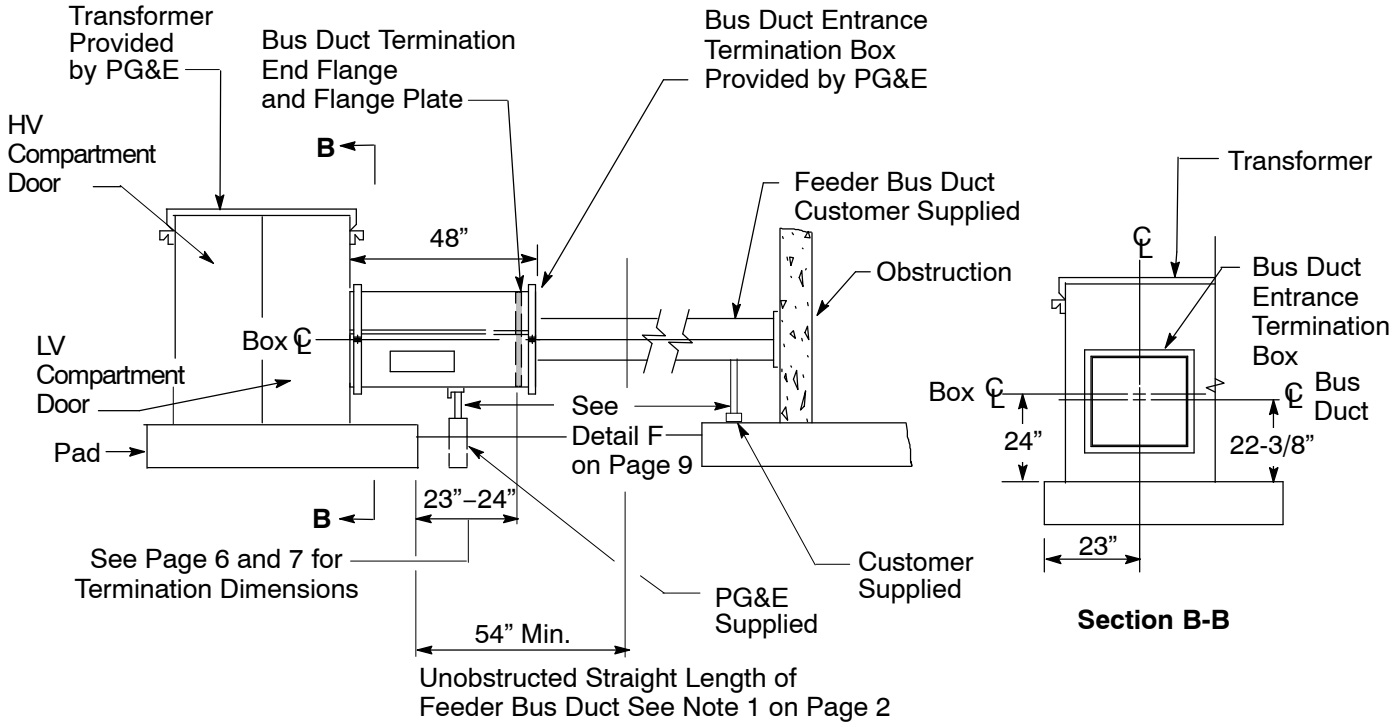

Figure 2
Typical Bus Assembly for Smallest Pad-Mounted Transformer

Note: Dimensions in all Figures are not to scale.

Requirements for Bus Duct Entrance Termination Unit for Use With Pad-Mounted Transformers

Bus Duct Entrance Termination Box Assembly

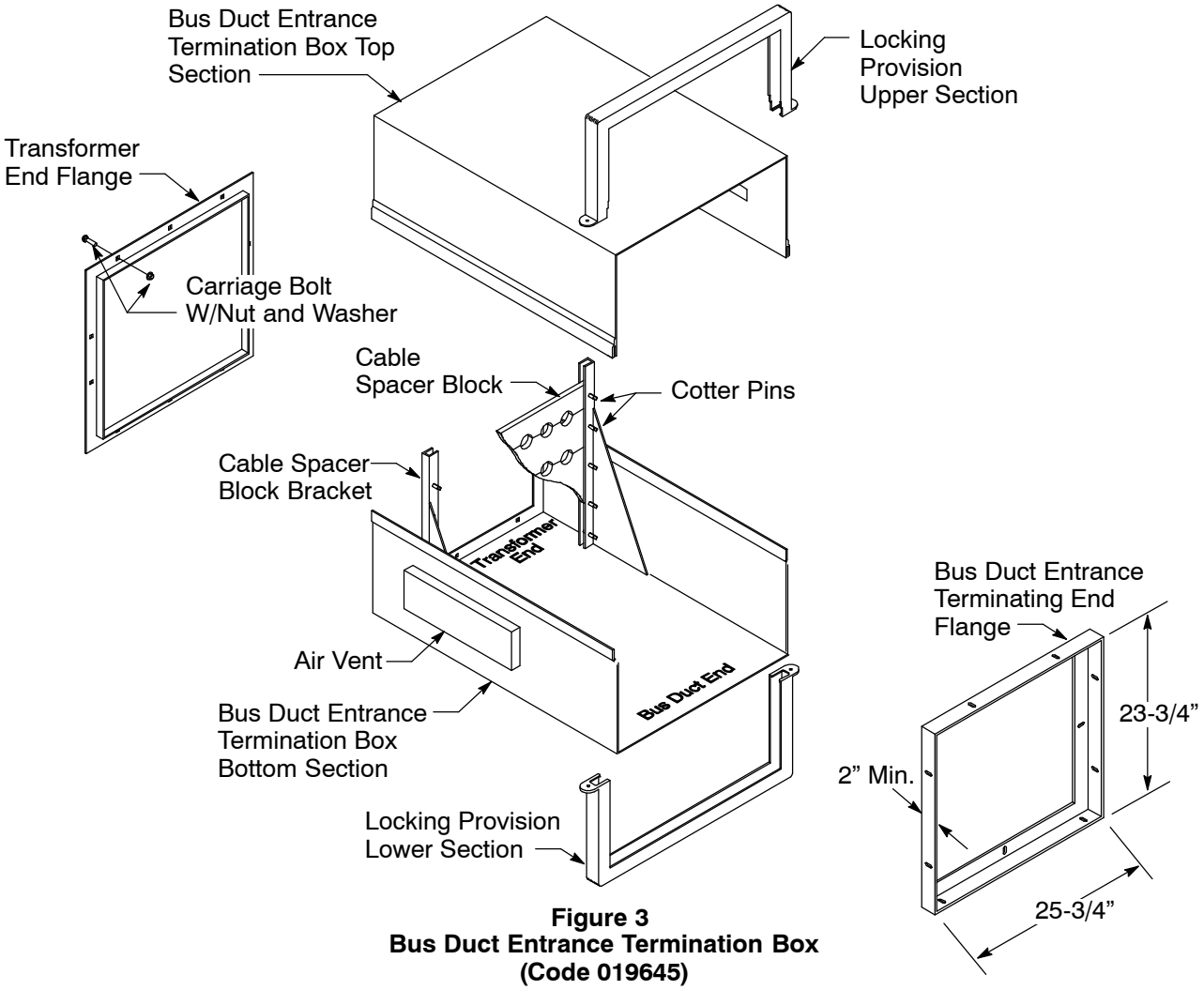

Figure 3
Bus Duct Entrance Termination Box
(Code 019645)

Table 1 List of Material for Bus Duct Entrance Termination Box Kit

Quantity	Description
1	Stainless Steel Bus Duct Entrance Termination Box
1	Spade Support Kit (Document 045291)
4	Copper Bus Bar Extensions (see Detail E on Page 9)
24	1” x 3/8” Carriage Bolts With Nuts and Washers
2	3/8” x 3-1/2” Bolt, With Nut and 3/16” Diameter Hole for Safety Lock
2	Safety Locks, Utilco Catalog Number PEL-1, Code 170115
10-Foot Length	Weather Stripping
1	Template

Table 2 Recommended Tools for Assembly and Installation of Bus Duct Entrance Termination Box

Description	Code
Sawzall, Heavy Duty, Milwaukee #6511-W/Case	210075
Blades, Sawzall, Milwaukee #48-00-1171 – Package of 10	207674
Drill, Skil #6550, 1/2” Variable Speed Reversible	210026
Drill Bit Set, 1/16” to 1/2”, W/Case	203026
Punch, Center, 3/8”	201305

Requirements for Bus Duct Entrance Termination Unit for Use With Pad-Mounted Transformers

Bus Duct Termination Assembly – Fully Extended

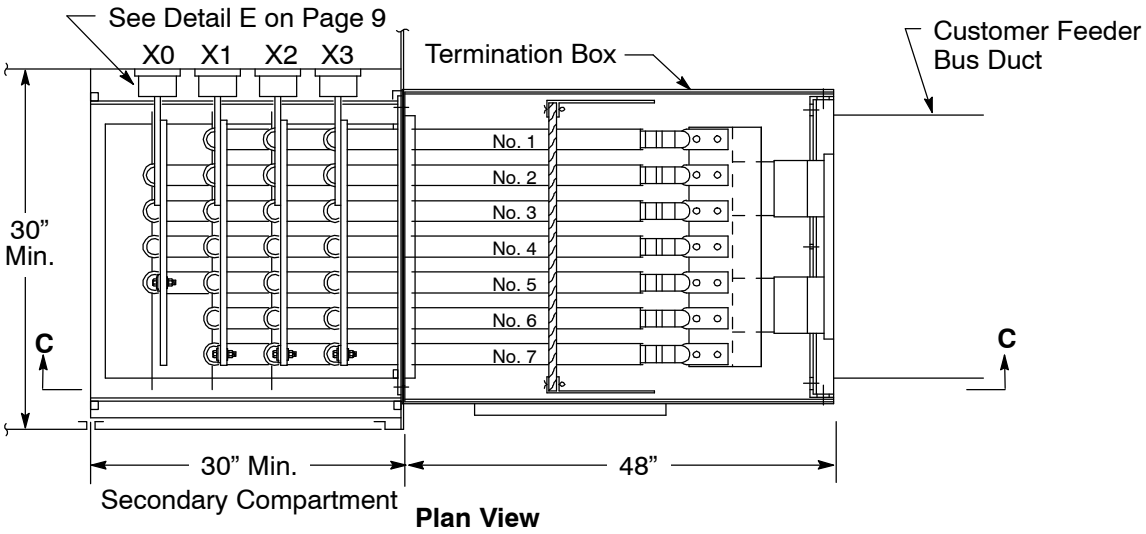

Figure 4
Typical Outdoor Bus Termination
Fully Extended

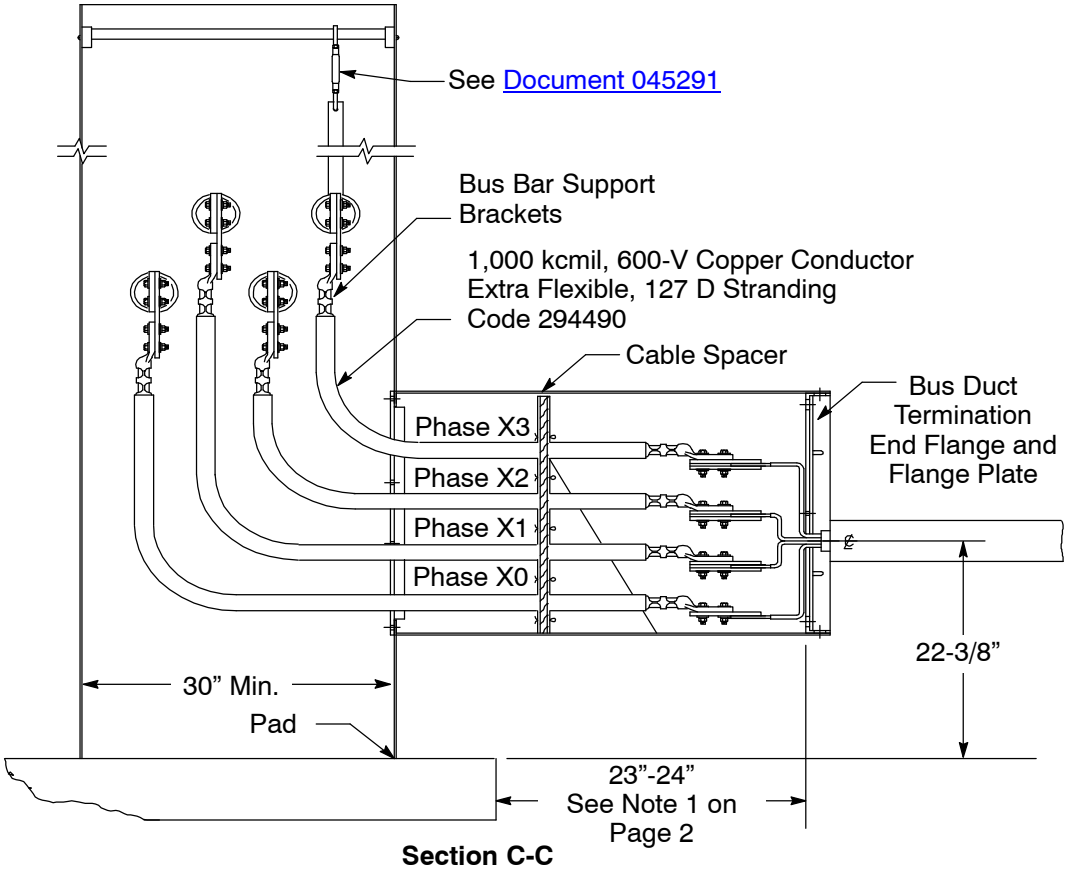

Section C-C
Fully Extended

Requirements for Bus Duct Entrance Termination Unit for Use With Pad-Mounted Transformers

Bus Duct Termination Assembly – Fully Compressed

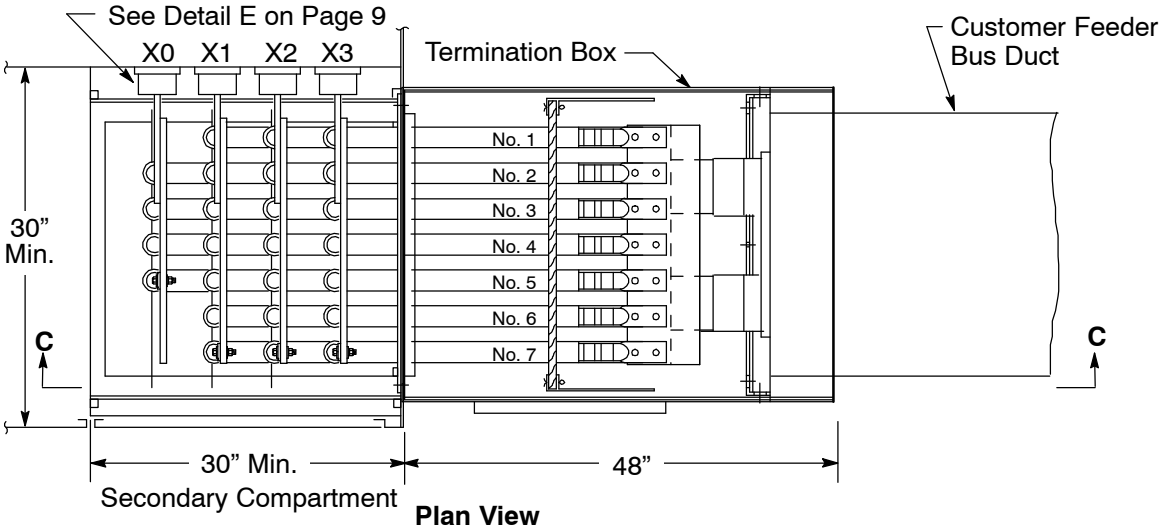

Figure 5
Typical Outdoor Bus Termination
Fully Compressed

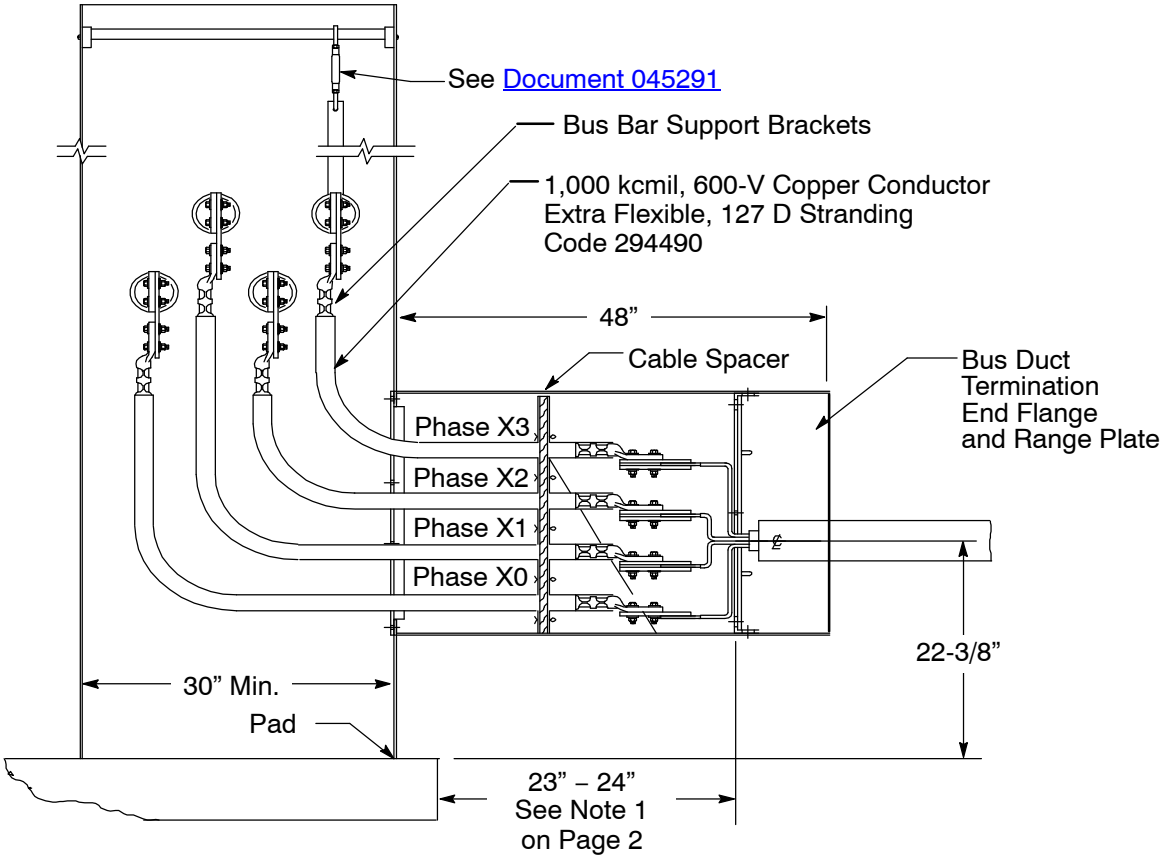

Section D-D
Fully Compressed

Requirements for Bus Duct Entrance Termination Unit for Use With Pad-Mounted Transformers

Bus Duct Termination Assembly – Details

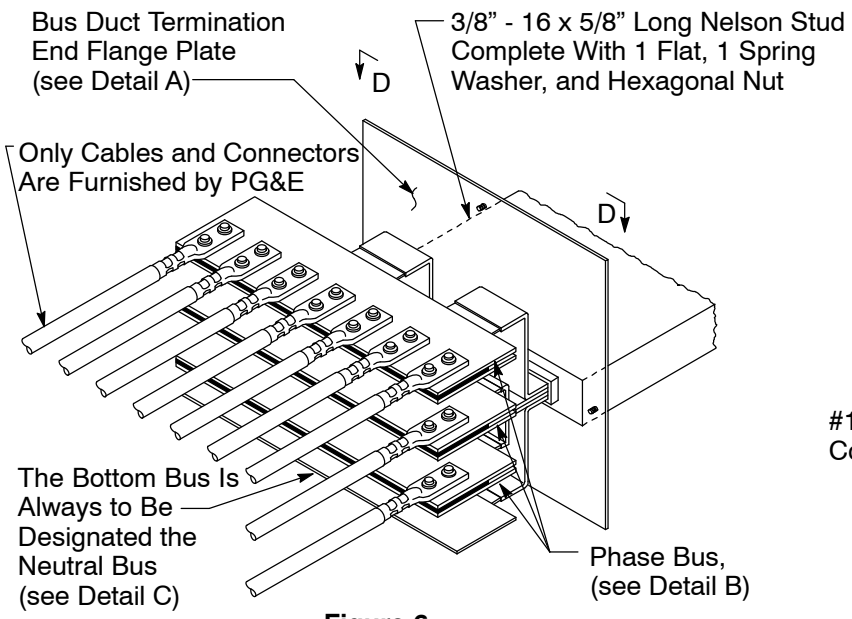

Figure 6
Termination Detail With
Bus Duct End and Tie Bars

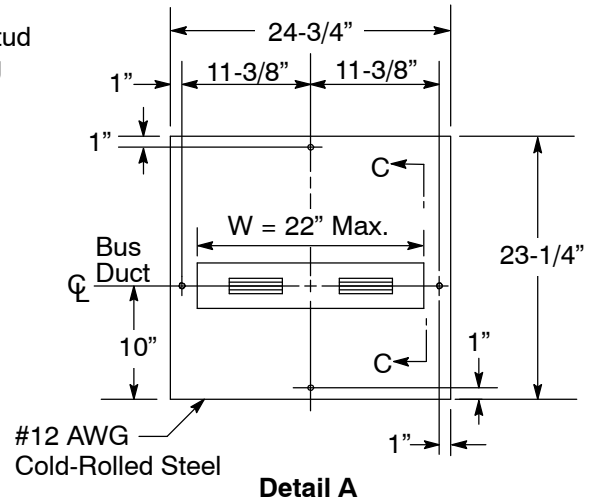

Detail A
End Flange Plate
(customer supplied)

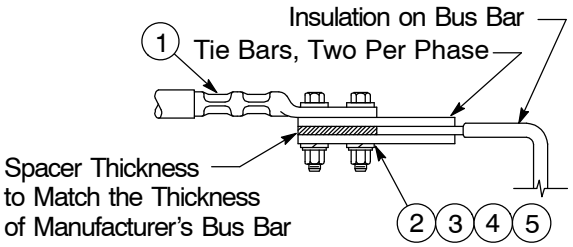

Detail B
Typical Phase Bus Termination Assembly

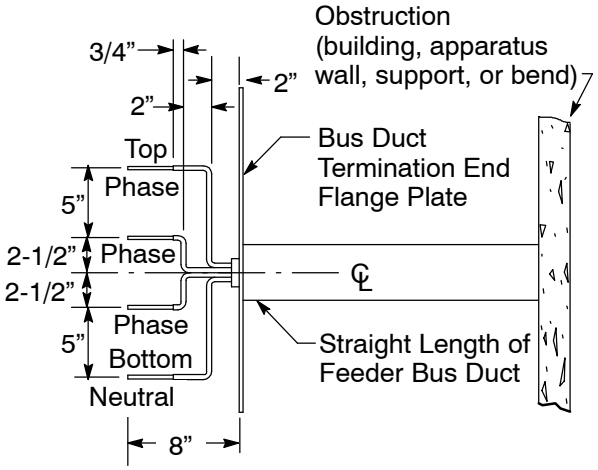

Section E-E
Bus Bar
(customer supplied)

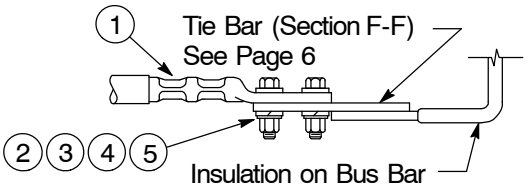

Detail C
Typical Neutral Bus Termination Assembly

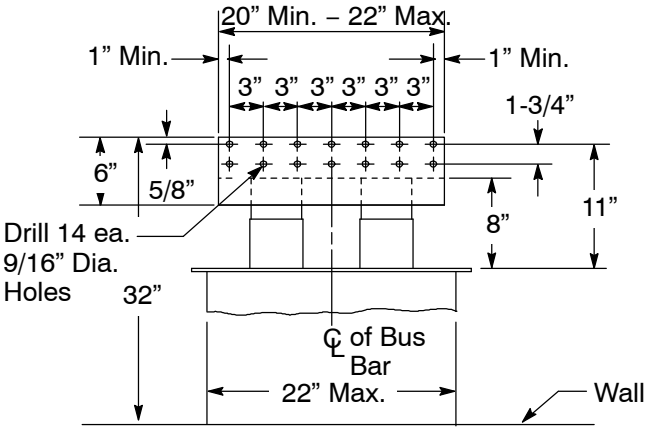

Section F-F
Tie Bar Connection 1/4" x 6" x 20" Long Copper
(two per phase and one per neutral required)
(customer supplied)

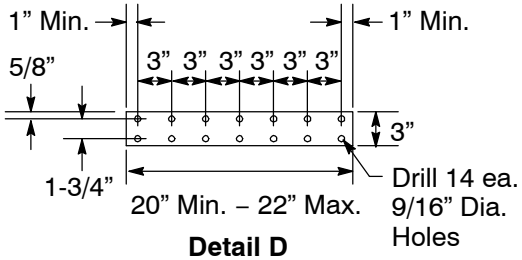

Detail D
Spacer 3" x 20" Long Copper
(thickness to suit)
(customer supplied)

Requirements for Bus Duct Entrance Termination Unit for Use With Pad-Mounted Transformers

Bus Duct Termination Assembly – Details (continued)

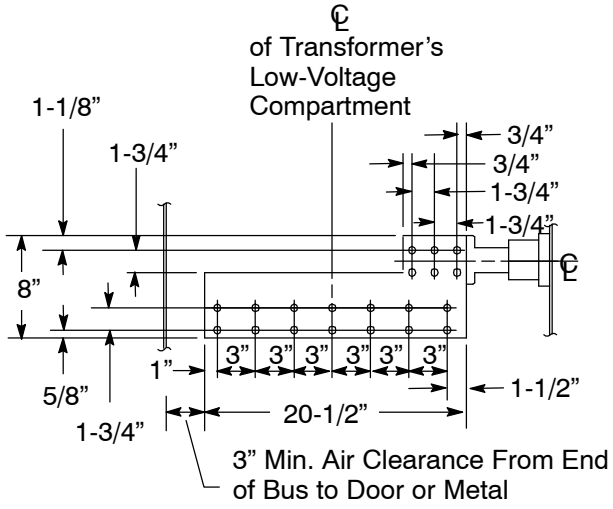

Detail E
Copper Bus Bar Extension
(see Table 1 on Page 5)

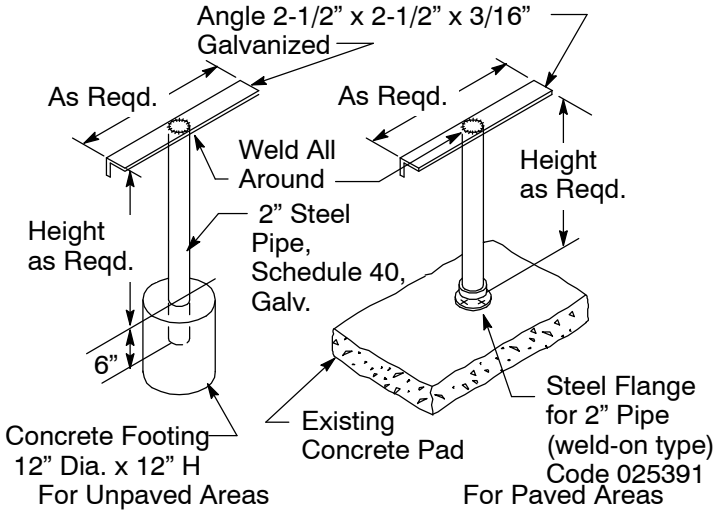

Detail F
Termination Unit Supports
(PG&E supplies one under the bus duct termination box. Customer supplies remainder as required.)

Table 3 Copper Conductor Requirements [1]

Main Switch Rating	Number of Conductors Per Phase	Number of Neutral Cables	Approximate Footage of Conductor
2,500	4	2	140
3,000	5	3	180
3,500	6	3	210
4,000	7	4	250

[1] Use only 1,000 kcmil copper cable (Code 294490).

Table 4 List of Materials for Bus Termination Assemblies (see Detail B and Detail C on Page 8)

Item	Description	Code	Document
1	Terminal Connector, Compression-Type, Cable-to-Flat, for 1,000 kcmil Cable	303461	015251
2	Screw, Cap (bolt), Hex. Head, 1/2" x 2-1/2", Everdur or Equivalent	193177	–
3	Nut, Bolt, Hex., 1/2", Everdur or Equivalent	195013	–
4	Washer, Round, 1/2", Everdur or Equivalent	195252	–
5	Washer, Lock, 1/2", Everdur or Equivalent	195193	–

Requirements for Bus Duct Entrance Termination Unit for Use With Pad-Mounted Transformers

Revision Notes

Revision 10 has the following changes:

1. Revised General Information Note 3B on Page 1.
2. Added Note 5 under General Information on Page 2. re-numbered Notes 6 - 8 on Page 2.
3. Added two new references on Page 2.
4. Revised Installation Section Note 1 on Page 2.
5. Revised Figure 1 and added Figure 2 on Page 3. Re–numbered Figures 3 – 6 on Pages 5 - 8.
6. Revised Item 1 description in Table 1 on Page 4.

Prepared by: EOB1

BOX-PAD FOR PAD-MOUNTED TRANSFORMERS

064309

Department: Electric T&D **Section:** T&D Engineering and Technical Support

Approved by: R. D. Kauzer (RDK6) Rich Kauzer **Date:** 10-28-05

Rev. #09: This document replaces PG&E Document 064309, Rev. #08. For a description of the changes, see Page 6.

This document is also included in the following manual:

- *Electric and Gas Service Requirements Manual* (Greenbook)

Purpose and Scope

This document shows the requirements for the box-pad used with single-phase Style DF (see Document 064307), duplex, and three-phase Style MTP (see Document 045290) transformers. This document applies to both radial and looped primary circuit arrangements.

Applicant Notes

1. Prior to setting a pad, the applicant will request an inspection by PG&E. PG&E shall determine the acceptability of each pad installation. The pad installation includes two ground rods and the interconnecting ground wire.
2. If required, the applicant shall provide suitable barriers for the protection of the transformer (refer to Document 051122).
3. The pads must be made by a PG&E-approved supplier. The approved suppliers are listed in Document 066211.

Fabrication Requirements

4. Box-pads are designed to fully encompass the transformer, including any radiators. Each pad shall hold the full kVA range of the indicated style. The pad dimensions are based on the allowed transformer dimensions shown in Document 064307.
5. The pads shall be permanently identified with manufacturer's name, month and year of fabrication, nominal weight, and PG&E code number in the area indicated in Figure 1 on Page 3.
6. The pads shall conform to Engineering Material Specification 21, "Box-Pad Style Transformer Pads".
7. The pads shall be designed to support transformers weighing 3,000 pounds.
8. Two 1/2"-13 UNC inserts for securing the transformer cabinet shall be provided as indicated. One 5/8"-11 UNC insert shall be provided at the center of gravity for lifting the pad.
9. The inserts shall be installed flush with the surface of the pad.
10. The edges shall be rounded. Refer to Engineering Material Specification 21, "Box-Pad Style Transformer Pads".
11. The corners may be rounded. Refer to Engineering Material Specification 21, "Box-Pad Style Transformer Pads".

Installation Requirements

12. The transformer pad shall be placed on a firm 10-inch rock base, on top of native or engineered fill material, which has been compacted to at least the requirements of Note 15 on Page 2.
13. The area under the pad shall be excavated to the required grade, or to a depth necessary to reach firm, undisturbed material, whichever is deeper. The material may be considered firm if it cannot be penetrated by thumb except with moderate effort.
14. If firm material has not been reached within a depth of 3 feet, excavate 3 feet beyond the perimeter of the pad, and backfill the entire excavated area to the required grade and to the requirements of Note 15 on Page 2.

15. In case it is necessary to excavate deeper than the required grade to reach firm material, backfill to the required grade in one of the following ways:
    A. Backfill with clean, non-expansive soil compacted to 90% of maximum density. The soil shall be placed in layers not more than 8 inches thick before compaction. Determine the maximum density and the in-place density by the California Test Method No. 216-6, Parts I and II respectively, or by ASTM D-1556 and D-1557 respectively. A copy of the test results may be required by PG&E.
    B. Backfill with soil or cement slurry consisting of one sack of Portland cement per cubic yard and clean native soil or sand.
16. In areas of known soft soil conditions, trenches within the pad excavation area for the installation of conduits shall be backfilled in one of the ways specified in Note 15.
17. In addition to the above requirements, the pads shall be placed on a 10-inch level rock base to provide uniform bearing.
18. A minimum distance of 6 feet shall be maintained between the ground rods.
19. In general, all equipment pads should be installed as level as practicable. Pads supporting oil-filled equipment must be leveled to within 1 inch in 8 feet in all directions.

Installation Procedure

Step 1. Excavate as required.

Step 2. Install the exterior ground rod and run the ground wire to the pad excavation.

Step 3. Place the primary conduit bends into the pad excavation.

Step 4. Place the secondary and the service conduit into the pad excavation.

Step 5. Compact and install the rock base. See “Installation Requirements”, Notes 15, 16, and 17.

Step 6. The exposed ends of the conduit bends should be about 1 inch above the gravel base.

Step 7. Install end bell fittings.

Step 8. Temporarily cap or plug all the conduits.

Step 9. Route the ground wire through the pad opening.

Step 10. Place the box-pad and backfill to the appropriate level for the pad.

Step 11. Install the interior ground rod.

Table 1 Bill of Materials

Item	Quantity	Description	Code
1	1	Box-Pad, (as required − see Table 2 on Page 3)	–
2	As Reqd.	Wire, #2 AWG, Solid Bare Copper	290074
3	2	Ground Rod, 5/8” x 8’-0”, Copperclad (see Document 013109)	187013
4	2	Clamp, Ground Rod, (see Document 013109)	187012
5	As Reqd.	Compacted Backfill	–
6	As Reqd.	Rock Base (compact 3/4” minus the rock base)	–

References **Document**

Corrosion Resistant Ground Rods and Ground Rod Clamps 013109
Engineering Material Specification No. 21, “Box-Pad Style Transformer Pads” EMS21
Engineering Material Specification No. 86, “Single-Phase and Three-Phase Pad-Mounted Distribution Transformers” EMS86
Location, Clearances, and Mechanical Protection Details for Pad-Mounted and Subsurface Equipment 051122
Loop-Style, Three-Phase, Pad-Mounted Transformers 045290
PG&E Approved Manufacturers 066211
Single-Phase, Dead-Front, and Duplex, Pad-Mounted Transformer 064307
Single-Phase, Dead-Front, and Duplex, Pad-Mounted Transformer Installations 064308

Box-pads

Table 2 Dimensions for Pad−Box

Transformer	Pad Code Number	Dimension in Inches						
		A	B	C	D	E	I	W
1-Wire, 2-Bushing Style DF-LB	360001	25	15	5.5	4	46	28	36
2-Wire, 4-Bushing Style DF-LB	360002	28	15	11	4	60	31	50
3-Wire, 6-Bushing Style DF-LB, Duplex and Style MTP	360003	37	15	6.5	4	60	40	50

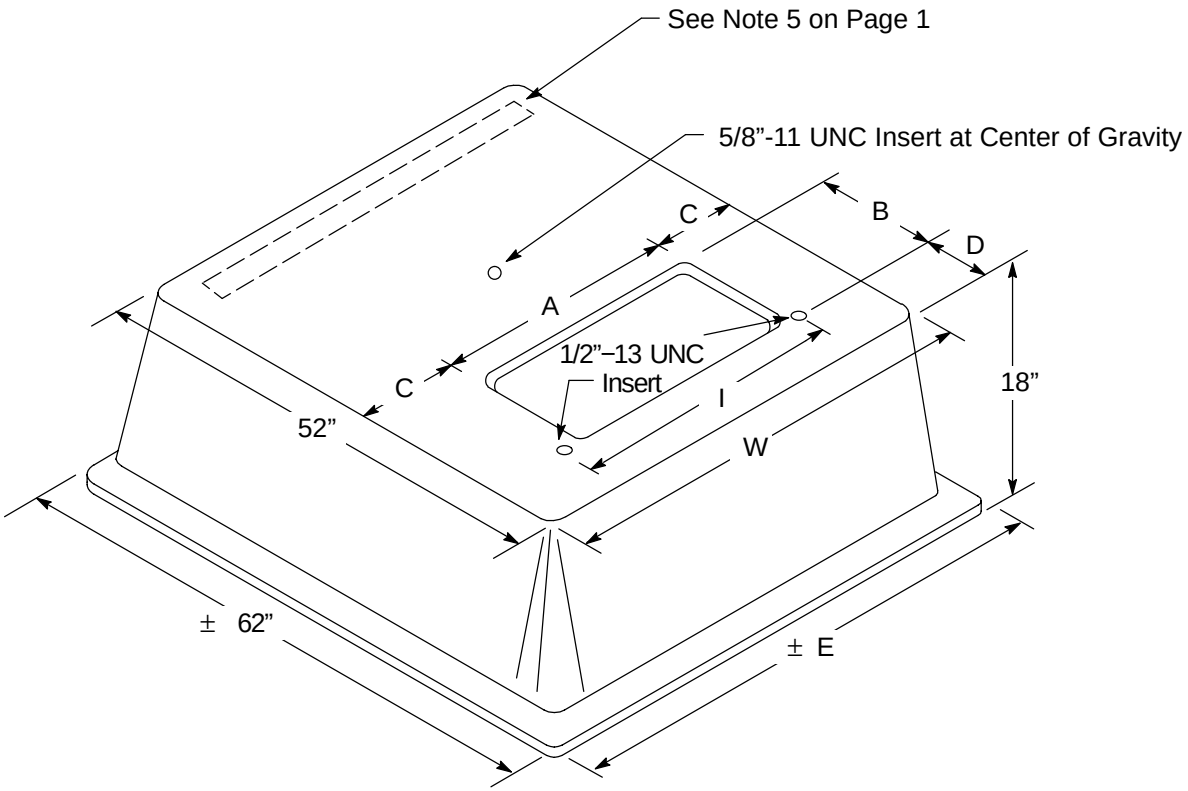

Figure 1
Box-Pad

Box-Pad For Pad-Mounted Transformers

Typical Box-Pad Installation

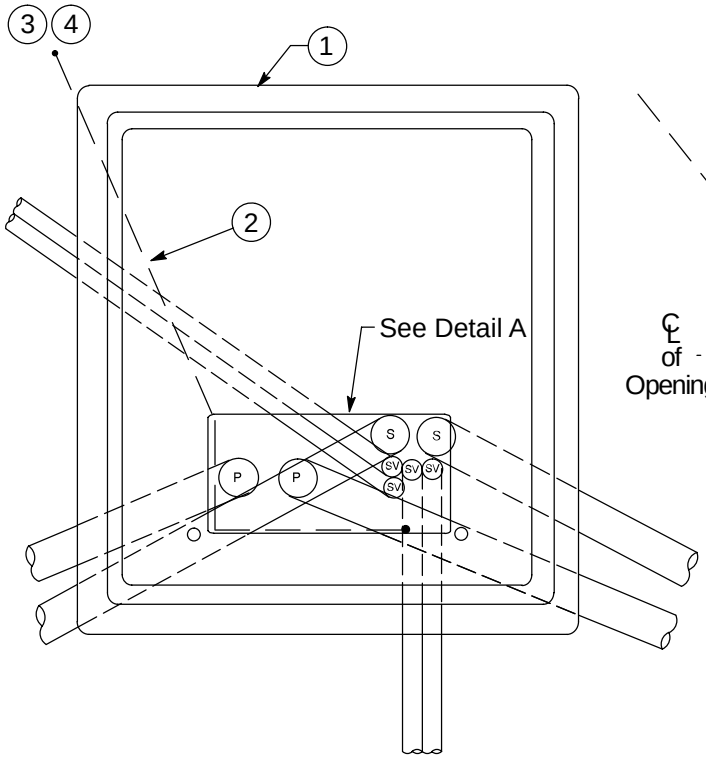

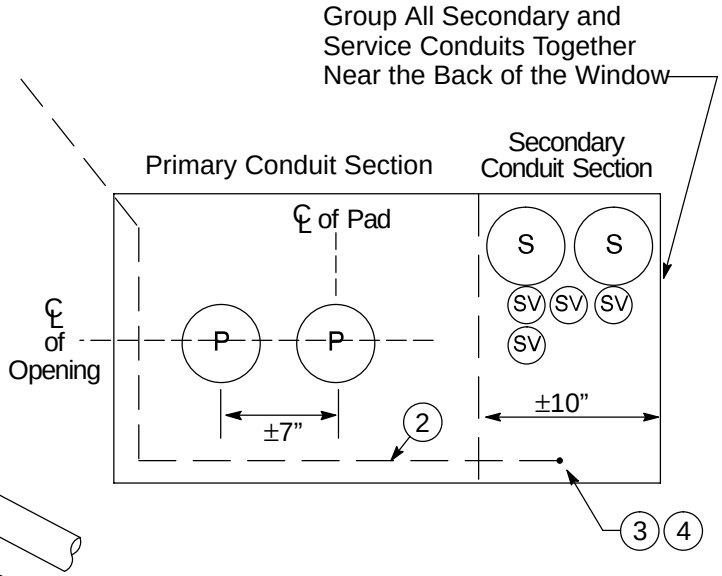

Detail A
Placement of Conduits

Figure 2
Pad Top View
(50” x 52” x 18” box-pad shown)

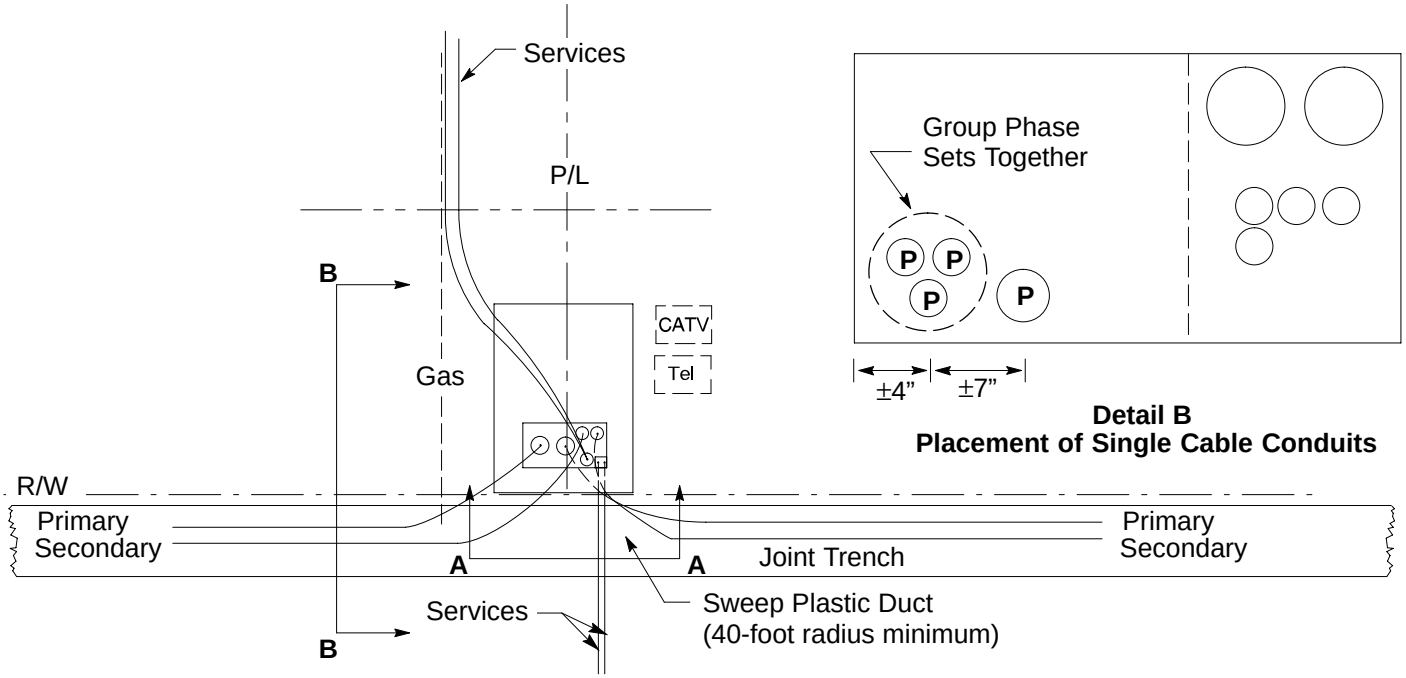

Detail B
Placement of Single Cable Conduits

Figure 3
Facilities Plan View

Box-Pad For Pad-Mounted Transformers

Typical Box-Pad Installation (continued)

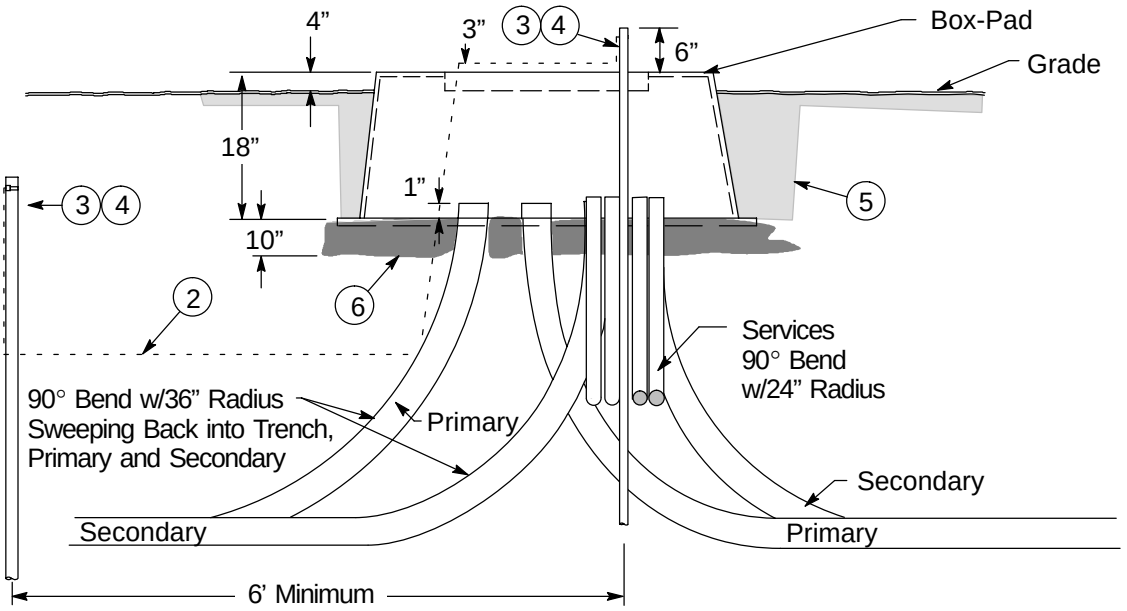

Section A-A
Pad Front View

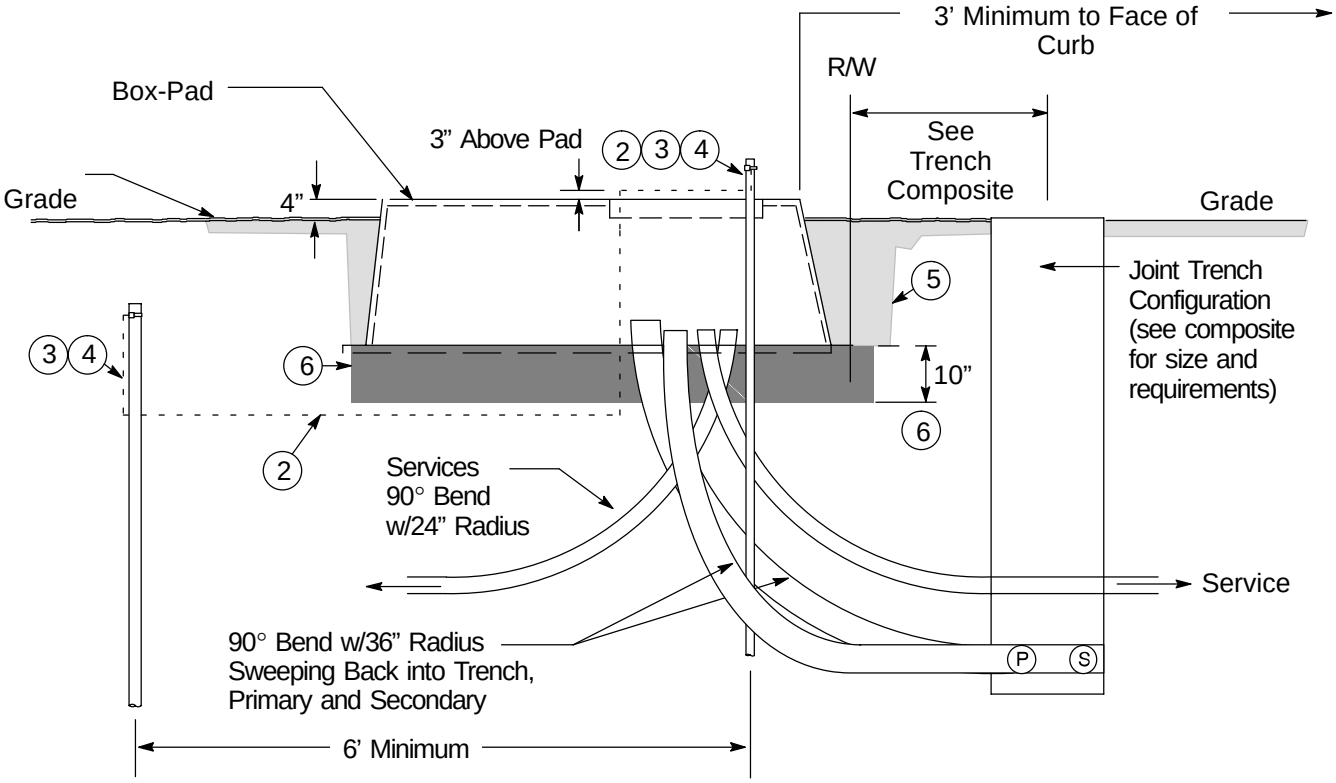

Section B-B
Pad Side View

This document is also found in the *Electric and Gas Service Requirements Manual* (Greenbook). This document has been split. See Document 064309A in the "Transformers" section of the *For Reference Only Manual (FRO)* for its remainder.

Revision Notes

Revision 09 has the following changes:

1. Revised Step 6 on Page 2 in the "Installation Procedure" section.

Prepared by: SXZO

OVERHEAD AND UNDERGROUND PANEL BOARD CONSTRUCTION 065374

Asset Type:	Electric Metering	**Function:**	Design
Issued by:	Dan Jantz (DWJ7)	**Date:**	07–01–16

Rev. #11: This document replaces PG&E Document 065374, Rev. #10. For a description of the changes, see Page 6.

This document also is included in the following manuals:

- *Electric and Gas Service Requirements Manual (Greenbook)*
- *Electric Meter Work Practices (EMWP)*

Purpose and Scope

This document illustrates the requirements applicable to residential, commercial, and agricultural overhead or underground service installations served from PG&E's lines. This document is applicable where panel-type structures are used to mount customer-owned and installed equipment.

General Information

1. Construction Materials and Requirements

   Ensure that all posts and panels on which the service and metering equipment are mounted meet the following minimum requirements. Equipment can be mounted to a panel, boards, or struts. See Note 5 on Page 2 for the maximum rating of service termination equipment.

   A. Material Treatment and Specifications

      (1) Ensure that the surface areas on all wood posts, boards, and solid panels are pressure treated, including the sides. Any other treating process that provides an equivalent penetration and retention must be approved by PG&E. Acceptable wood preservatives are water-borne salts and pentachlorophenol. Brush application of wood preservatives is ineffective and therefore unacceptable.

      (2) Pipe posts must be galvanized rigid steel.

      (3) All metal boards or solid metal panels must be rigid steel and have a rust inhibitor applied to all surface areas.

      (4) Strut channels, fittings, and associated hardware must be stainless steel or galvanized steel.

   B. Material Dimensions

      (1) Structure: All structures must be a minimum length of 48 inches. For structures up to 72 inches long, the minimum combined height of the boards, panel, or struts must be 36 inches. For structures up to 96 inches long, the minimum combined height of the boards, panel, or struts must be 42 inches. For structures with lengths greater than 96 inches, use additional posts. The top of the structure must not exceed 84 inches high from the ground. There must be a minimum of 6 inches of clearance between the ground and all equipment, panels, boards, or struts.

      (2) Boards: Place side by side.

         (a) Wood: Minimum 2 inches thick by 12 inches wide (nominal).

         (b) Metal: Minimum 1/2 inch thick by 12 inches wide.

      (3) Panel: One solid sheet.

         (a) Wood: 1 inch thick.

         (b) Metal: 1/4 inch thick.

      (4) Struts: At a minimum, two struts are needed to support each piece of service and metering equipment. It is recommended that one strut be attached towards the top and one strut be attached towards the bottom of the equipment. Add struts for additional equipment with different length dimensions. Use struts with or without boards or panels.

         (a) Strut channel dimensions must be a minimum 1-1/2 inch x 1-1/2 inch. See Figure 9 on Page 6.

(5) Posts: Use minimum of two posts to support panel-type construction. Add more posts if the construction exceeds the structural dimensions listed in Note 1B(1) on Page 1. If applicable, a PG&E-approved, customer-owned pole can be used as one of the posts. The customer-owned pole must be installed in accordance with Document 025055 and the panel board must be attached to the poles as shown in Figures 8 on Page 5 and Figure 9 on Page 6.

(a) Wood: A cross section 6 inches x 6 inches or 8 inches in diameter.

(b) Metal: 3 inches in diameter.

C. Footing and Support

(1) Place all posts in the center of a 12 inches minimum diameter concrete footing. Extend the footing a minimum of 36 inches into the ground (excluding gravel bedding), a minimum of 4 inches above ground level, and have a 1/2 inch slope away from the post to allow for drainage.

D. Fasteners

(1) For wood posts, use minimum 3/8 inch x 5 inches lag screws.

(2) For metal posts, use 3/8 inch minimum through bolts with nuts and washers.

(3) For unistrut, use approved fasteners and hardware made for the strut channels.

E. Screw Holes or Openings

(1) All unused or exposed screw holes and openings must be tightly secured by plugging or filling the entire hole with screws, bolts, or other type of metal fasteners. Sealants can be used along with the screws, bolts, and other metal fasteners.

F. Clearances and Barrier Posts (see Document 051122)

(1) A minimum 36 inches of clear and level working space must be maintained in front of the panel board structure at all times.

(2) If any part of the panel board structure is located within 36 inches of a thoroughfare or road, then install barrier posts. If the thoroughfare or road has high vehicular traffic and the panel board structure is less than 108 inches (9 feet) away, then install barrier posts.

(3) The panel board and customer owned pole (if installed) must not be located less than 10 feet from the surface of the PG&E pole or within 10 feet of the vertical plane of a PG&E line.

2. Grounding: The customer is responsible for bonding and grounding all exposed, non-current-carrying metal parts **including all metal strut channels and posts, when used**. Ground and bond in accordance with the National Electrical Code (NEC) and local ordinances. PG&E prefers, but does not require, the grounding electrode conductor wire to be protected against physical damage by rigid steel conduit or armored cladding.

3. A voltage stabilizer for 3-wire service will be furnished and installed by PG&E (see Document 052497).

4. Properly identify and mark meters as described in Section 5.5.1 on Page 5-10 of the *Electric and Gas Service Requirements Manual (Greenbook)*.

5. Termination or metering equipment with an ampacity rating greater than 400 amps, 3-phase or 600 amps, 1-phase must be pad-mounted (free standing). Refer to *Electric and Gas Service Requirements Manual (Greenbook)*, Section 9.10.

6. The minimum meter height for electric panels with current transformers (CT's) is 60 inches as measured from final grade to the center of the meter. The maximum meter height is 75 inches.

References	Location	Document
Requirements for Customer-Owned Poles	OH: Services/Greenbook	025055
Location, Clearances, and Mechanical Protection Details for Pad-Mounted and Subsurface Equipment	UG-1: General/Greenbook	051122
Voltage Stabilizer for 480 Volt, Three-Phase, 3-Wire Ungrounded Service	OH: Meters/EMWP	052497
Agricultural Underground Service, 500 hp or Less	UG-1: Services/Greenbook	054619
Agricultural Overhead Service, 300 hp or Less	OH: Services/Greenbook	058087

Overhead and Underground Panel Board Construction

Typical Panel Board Construction

Notes

1. See Table 1 on Page 6 for the material list.
2. Item 2 may be replaced by Items 1 and 3.

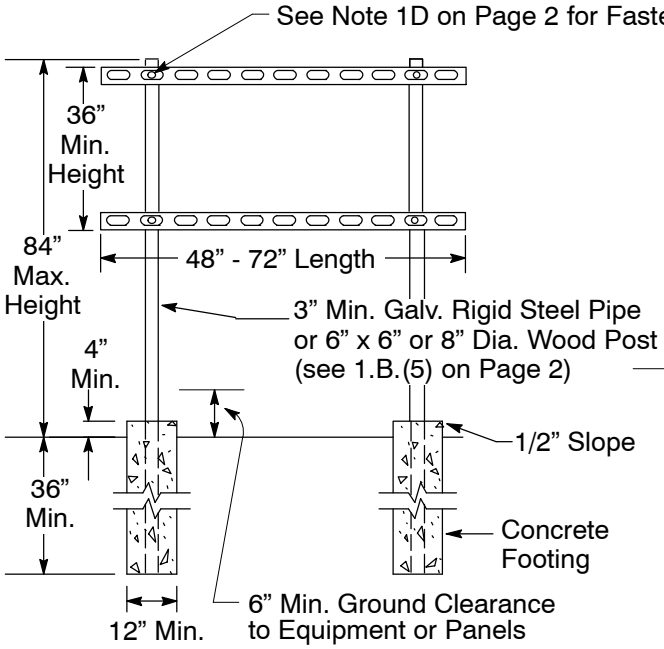

Figure 1
Panel Board Construction With Struts

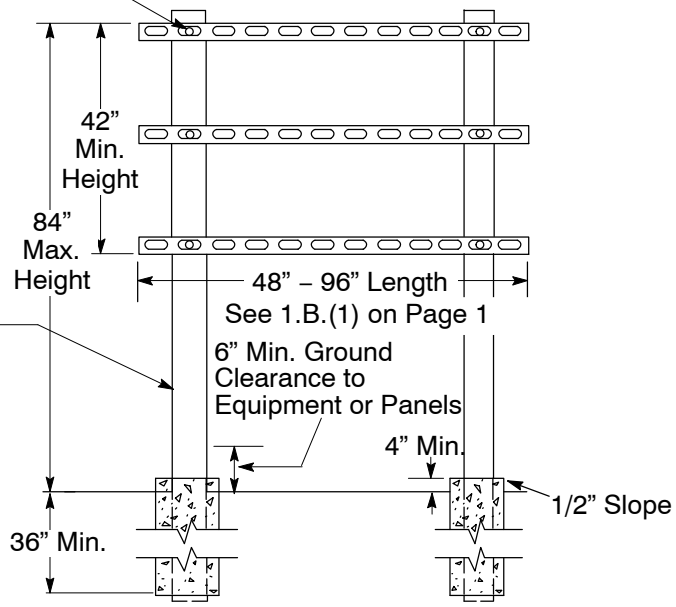

Figure 2
Large Panel Board Construction With Struts

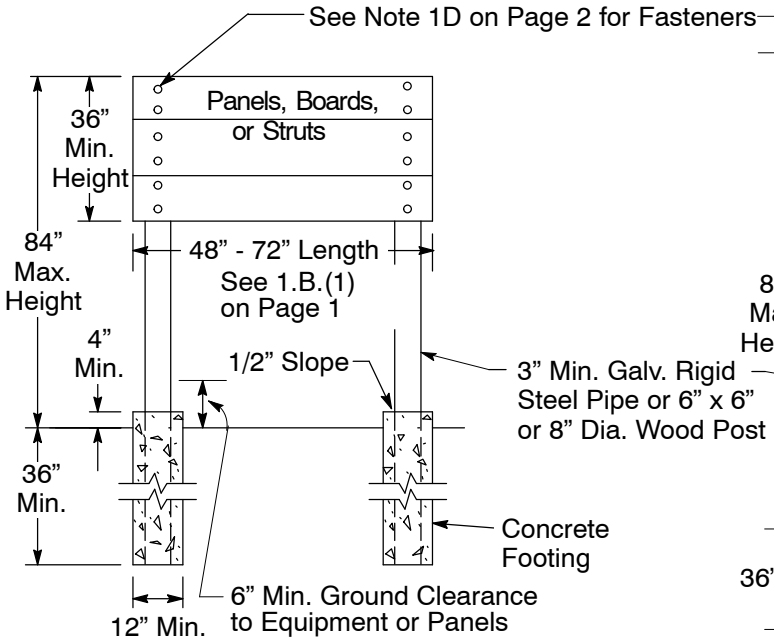

Figure 3
Panel Board Construction

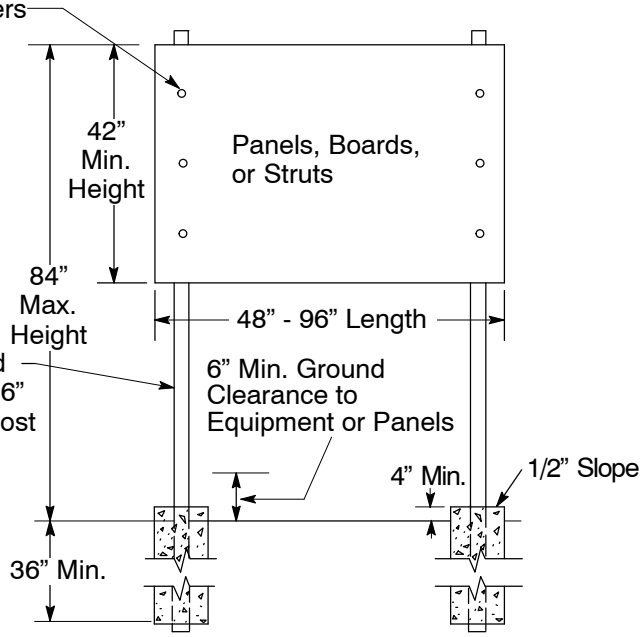

Figure 4
Large Panel Board Construction

Typical Underground Panel Board Construction

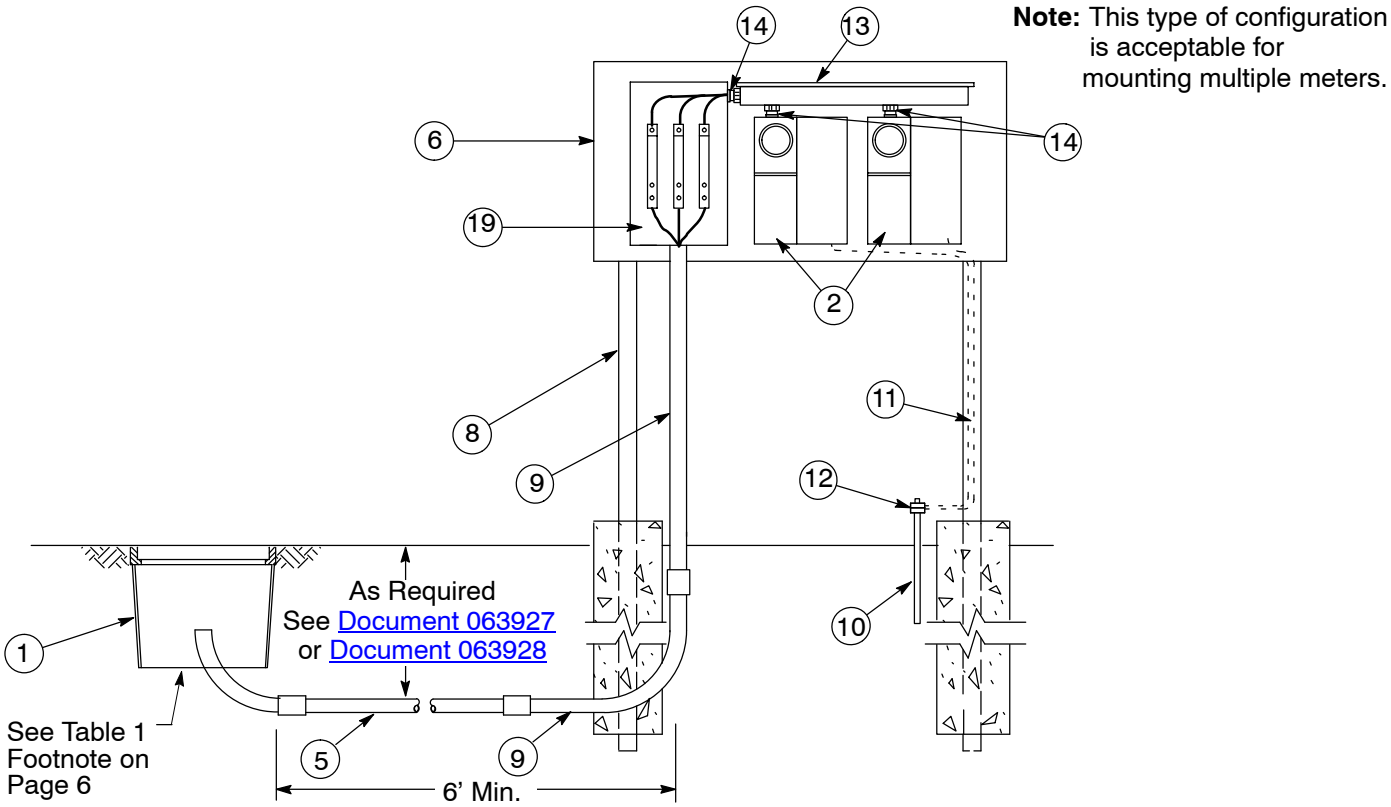

Figure 5
Underground Service With Second Meter Panel

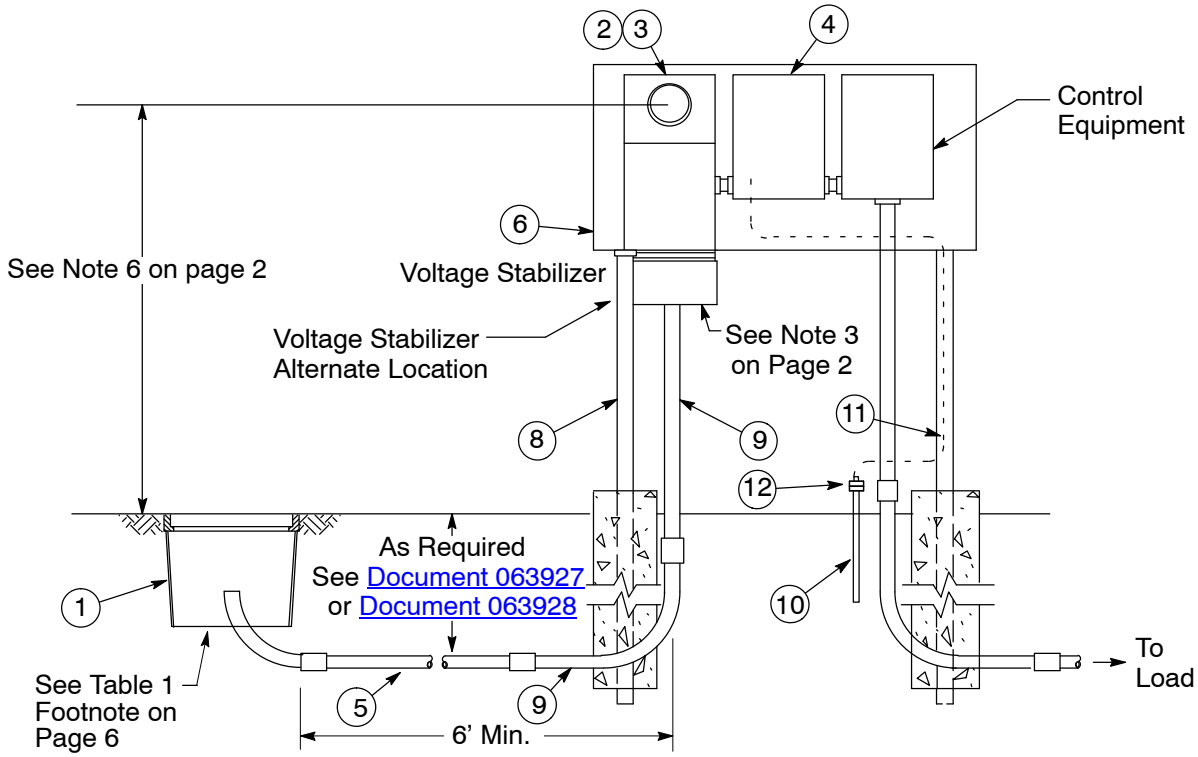

Figure 6
Underground Service Using Panel Board Construction

Typical Overhead Panel Board Construction

Note: This type of configuration is acceptable for mounting multiple meters.

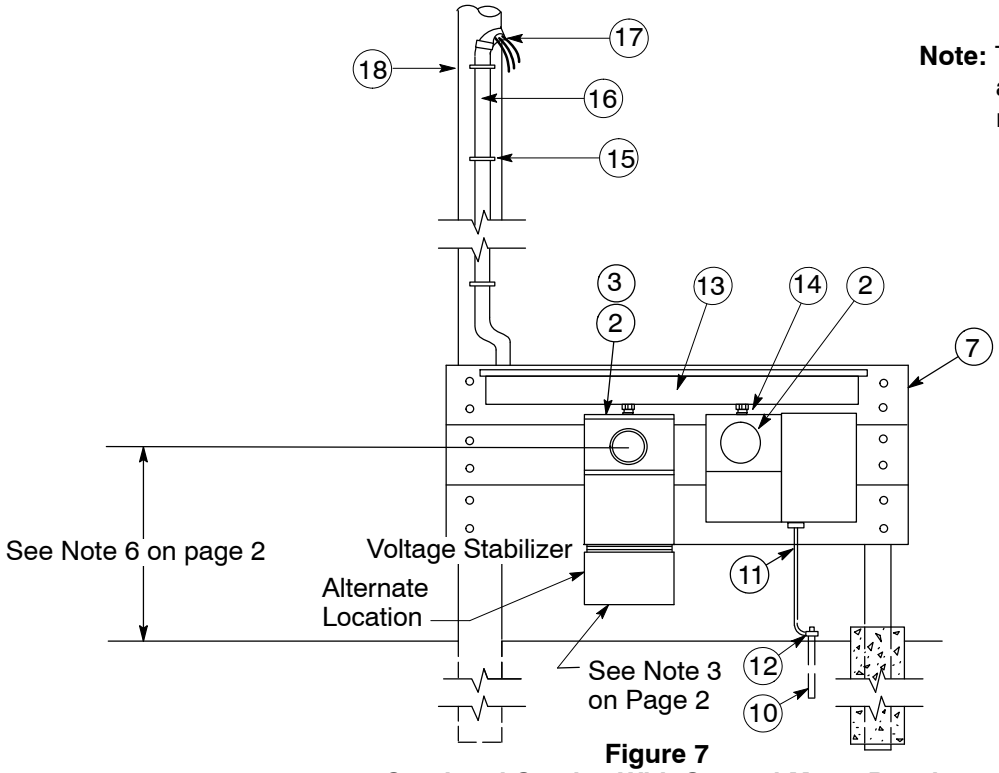

Figure 7
Overhead Service With Second Meter Panel

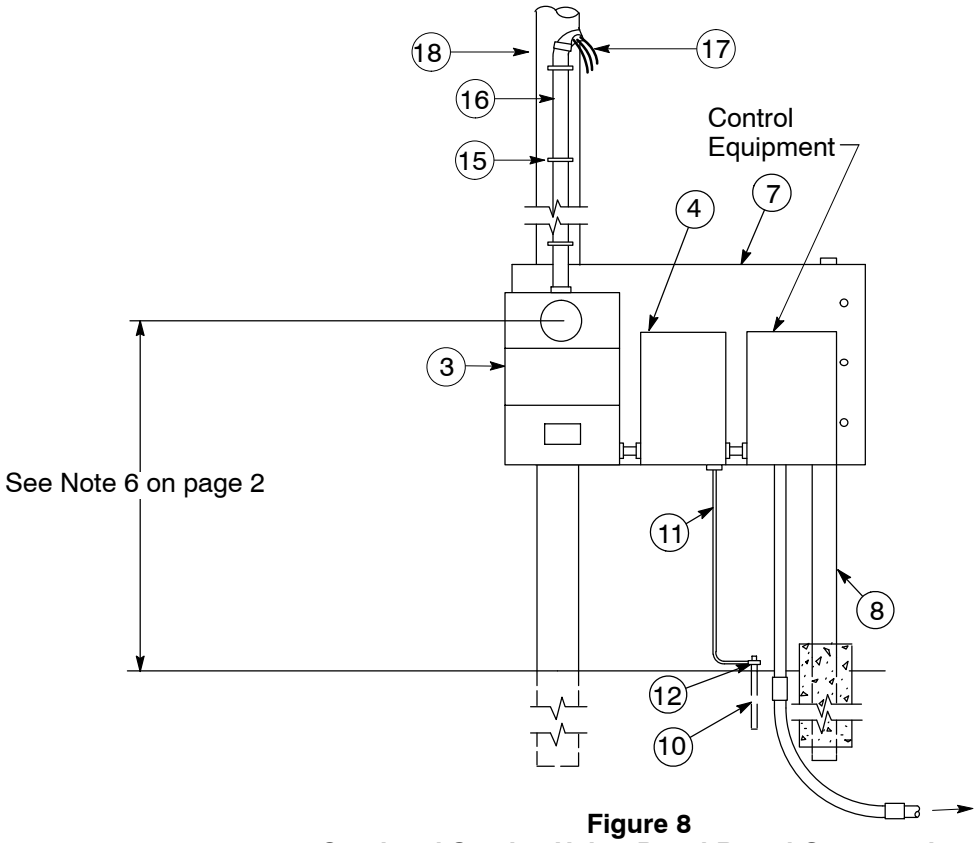

Figure 8
Overhead Service Using Panel Board Construction

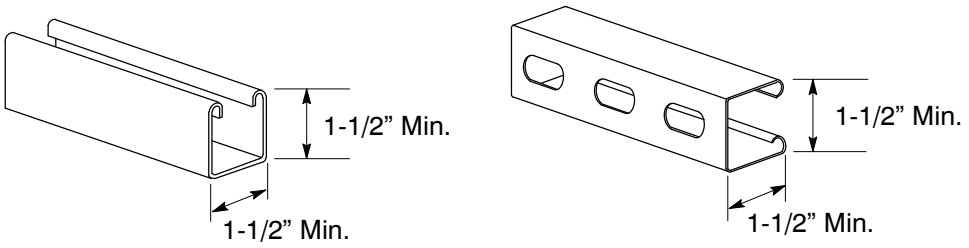

Figure 9
Typical Strut Channels Used for Panel Board Construction

Table 1 List of Material To Be Furnished and Installed by Customer

Item	Description
1	Underground Pull Box, Required [1]
2	Self-Contained, Bused Safety Socket Box
3	Combination Meter and Current Transformer Cabinet (See Note 6 on Page 2)
4	Main Switch of Service Equipment Enclosure
5	Service Conduit, As Required
6	UG Panel Board Construction (See Figures 5 – 6)
7	OH Panel Board Construction (See Figures 7 – 8)
8	Post (See Note 1 on Page 1)
9	Conduit, Riser, Galvanized Rigid Steel, Continuous without Couplings
10	Ground Rod (See Note 2 on Page 2)
11	Ground Wire, Copper, Bare
12	Ground Clamp (As Required) for Item 10
13	Sealable Gutter
14	Metal Myers Hub With Close Nipple
15	Heavy Duty 2-Hole Pipe Strap Every 36”
16	PVC Schedule 40, minimum
17	Weatherhead
18	PG&E-Approved, Customer-Owned Pole
19	Termination Enclosure

[1] The pull box is required to be installed but may be exempt at the discretion of the PG&E inspector.

Revision Notes

Revision 11 has the following changes:

1. Revised Table 1 on Page 6.
2. Revised Note 2 on Page 2.

Prepared by: ABB1

PG&E-APPROVED ELECTRIC DISTRIBUTION MATERIALS MANUFACTURERS

066211

Asset Type: Electric Distribution **Function:** Design

Issued by: M.L. Thibault (MLTC) **Date:** 07-01-16

Rev. #21: This document replaces PG&E Document 066211, Rev. #20 For a description of the changes, see Page 4.

Purpose and Scope

This document provides a list of PG&E-approved manufacturers of major materials for use in PG&E's Electric Distribution System.

Table 1 PG&E-Approved Electric Distribution Materials Manufacturers

Material	Responsible Engineer	Approved Manufacturer
Arresters	Sam Chang	Joslyn, Ohio Brass, Tyco
Barrier Posts	M.L. Thibault	Allwire
Brackets, Overhead	Eduardo Sanchez	Aluma-Form, Chance, Joslyn, Kortick, MacLean
Cable, Primary	Lisseth Villareal	Okonite, Prysmian
Cable, Secondary	Lisseth Villareal	General Cable (Alcan), Southwire
Capacitor Controls	Eduardo Sanchez	HD Electric, S&C (Energyline)
Capacitor, Overhead	Eduardo Sanchez	ABB, Cooper
Capacitor, Pad-Mounted	Eduardo Sanchez	Scott Engineering
Conductor, Overhead	Lisseth Villareal	General Cable (Alcan), Southwire
Conduit, HDPE for Boring	Lisseth Villareal	Dura-Line (AD Technologies)
Conduit, Smooth Core Flex	Lisseth Villareal	Dura-Line (AD Technologies)
Conduit, PVC for Boring	Lisseth Villareal	Prime Conduits (Carlon Bore-Gard), Certainteed CertaCom
Conduit, PVC, ASTM F512 DB120, Schedule 40 and 80, UL 90°C, DB120	Lisseth Villareal	Ridgeline Pipe Heritage, Prime (conduit), JM Eagle
Conduit,PVC, DB120 and Schedule 40, Cellular Core	Lisseth Villareal	Rocky Mountain
Conduit, Steel	Lisseth Villareal	Allied, Western Tube
Conduit Fittings, Steel	Lisseth Villareal	Picoma, Shamrock
Connectors, Overhead, Automatic Splice	Richard Kauzer	Blackburn, Fargo, MacLean
Connectors, Overhead, Compression	Richard Kauzer	Alcoa, Blackburn, Burndy, Homac, Hubbell, Nicopress
Connectors, Overhead, Dead-Ends	Eduardo Sanchez	EMC, Hubbell
Connectors, Overhead, Tap Clamp	Richard Kauzer	Hubbell, Maclean
Connectors, Overhead, Wedge Tap	Richard Kauzer	TE Connectivity (AMP)
Connectors, Underground, Compression	Lisseth Villareal	Blackburn, Burndy, Homac, Hubbell, Kearney, Penn Union
Connectors, Underground, Pin Terminal	Lisseth Villareal	Homac
Connectors, Underground, Secondary Multi-Tap Bars	Lisseth Villareal	Blackburn, Homac
Connectors, Underground, Slip-Fit Transformer Secondary Bars	Lisseth Villareal	Homac, Utilco

Table 1 PG&E-Approved Electric Distribution Materials Manufacturers (continued)

Material	Responsible Engineer	Approved Manufacturer
Connectors, Underground, Spade Terminals	Lisseth Villareal	Burndy, Dossert, Homac
Connectors, Underground, Split-Bolt	Lisseth Villareal	Blackburn, Burndy, Penn Union
Cutouts	Sam Chang	MacLean, Cooper, Hubbell
Disconnect	Sam Chang	Cooper, S&C
Elbows, 200 Amp	Lisseth Villareal	Cooper, Elastimold
Elbows, 600 Amp, Epoxy CP, and RTP	Lisseth Villareal	Elastimold, Richards, Cooper
EPDM CP and RTP	Lisseth Villareal	Elastimold
Enclosure, Frames and Covers	Lisseth Villareal	Madruga Iron Works, Jensen Precast, Oldcastle Precast (Utility Vault)
Enclosure, Primary – Box, Concrete	Lisseth Villareal	Jensen Precast, Oldcastle Precast (Utility Vault), Mid-State Concrete
Enclosure, Primary – Sectional Box, Concrete	Lisseth Villareal	Oldcastle Precast (Utility Vault)
Enclosure, Primary – Sectional Box, Non-Concrete	Lisseth Villareal	Hubbell (Strongwell/Quazite)
Enclosure, Secondary – Box, Concrete	Lisseth Villareal	Jensen Precast, Oldcastle Precast (Utility Vault)
Enclosure, Secondary – Box, Polymer-Concrete	Lisseth Villareal	Hubbell (Strongwell/Quazite), Armorcast, New Basis
Enclosure, Secondary – Pedestal	Lisseth Villareal	Armorcast, New Basis
Fault Indicator – Overhead	Sam Chang	Horstman/Power Delivery Products, SEL (Schwertzer)
Fault Indicator – Underground	Sam Chang	Horstman/Power Delivery Products
Fuses	Sam Chang	Chance, Combined-Tech, Cooper, Hi-Tech, Kearny, S&C
Ground Rods	M.L. Thibault	Calpico, Eritech, Galvan, Nehring
Insulators, Dead-End, Silicon	Eduardo Sanchez	K–Line, MacLean, Salisbury, Advanced Rubber
Insulators, Line	Eduardo Sanchez	Lapp, NGK, Porcelain Products, Victor, Hendrix, Preformed
Insulators, Standoff	Sam Chang	S&C
Interrupter – Pad-Mounted	Ryan Kowdley	Madruga, Thomas & Betts
Interrupter – Subsurface, 200 Amp	Ryan Kowdley	Trayer, Thomas & Betts
Interrupter – Subsurface, 600 Amp	Ryan Kowdley	Trayer
Interrupter – Vault-Mounted	Ryan Kowdley	Thomas & Betts, G&W
Junctions, Primary – Pad-Mounted	Lisseth Villareal	Madruga, Maysteel, Patton & Cooke, Scott
Junctions, Primary – Subsurface	Lisseth Villareal	Elastimold, Inertia
Pad, Capacitor	Eduardo Sanchez	Jensen Precast, Teichart Brooks, Oldcastle Precast (Utility Vault)
Pad, Junction, Primary – Pad-Mounted	Lisseth Villareal	Hubbell
Pad, Switch, Box	Ryan Kowdley	New Basis, Hubbell/ Quazite
Pad, Switch, Concrete	Ryan Kowdley	Jensen Precast, Mid-State Concrete, StructureCast, Teichart Brooks, Oldcastle Precast (Utility Vault)
Pad, Transformer, Box	M.L. Thibault	Armorcast, CDR, New Basis, Strongwell/Quazite

Table 1 PG&E-Approved Electric Distribution Materials Manufacturers (continued)

Material	Responsible Engineer	Approved Manufacturer
Pad, Transformer, Concrete	M.L. Thibault	Jensen Precast, Mid-State Concrete, Structure Cast, Teichart Brooks, Oldcastle Precast (Utility Vault)
Photocontrol, Streetlight [1]	Richard Kauzer	ALR, DTL, Fisher Pierce, Sun-Tech
Poles, Wood, Distribution (taller than 35 feet)	Richard Kauzer	McFarland Cascade
Poles, Wood, Service	Richard Kauzer	Koppers, McFarland Cascade, Nevada Wood Preserving, Pacific Wood Preserving of Oregon, Stella-Jones, Thunderbolt Wood Treating
Pulling Lubricant	Lisseth Villareal	Dura-Line (Arnco), Polywater
Pulling Tape	Lisseth Villareal	Dura-Line (Arnco), Herculine, Nepco, Wellington
Recloser	Sam Chang	Cooper
Recloser Controller	Sam Chang	Cooper
Regulator, Voltage	Eduardo Sanchez	Cooper, Howard Industries
Retaining Wall	Lisseth Villareal	Jensen Precast, Oldcastle Precast (Utility Vault)
Sectionalizer	Sam Chang	Cooper
Splices, UG Insulated, Primary	Lisseth Villareal	Elastimold, 3M, TE Connectivity (Raychem)
Splices, UG Insulated, Secondary	Lisseth Villareal	3M
Switches, Controllers, Overhead, SCADA	Marlon Viduya	S&C
Switches, Controllers, Subsurface, SCADA	Marlon Viduya	S&C, Trayer
Switches, Fused – Pad-Mounted	Ryan Kowdley	S&C
Switches, Fused – Subsurface	Ryan Kowdley	ABB, Trayer
Switches, Overhead, Manual	Sam Chang	Cooper, Inertia, S&C
Switches, Pad-Mounted	Ryan Kowdley	S&C, Thomas & Betts
Switches, Subsurface 200 Amp, Manual	Ryan Kowdley	ABB, Trayer, ISSI
Switches, Subsurface 600 Amp, Manual	Ryan Kowdley	Trayer
Termination, Silicone Cold Shrink	Lisseth Villareal	3M, TE Connectivity (Raychem)
Transformer, Potential, Dry-Type, Outdoor Overhead	M.L. Thibault	ABB,GE
Transformer, Potential, Dry-Type, Submersible	M.L. Thibault	ABB
Transformer, Potential, Liquid-Filled, Outdoor Overhead	M.L. Thibault	ABB, Mid Central
Transformers, Single-Phase Overhead	M.L. Thibault	Howard Industries, Power Partners, Cooper
Transformers, Single-Phase Pad-Mounted	M.L. Thibault	ABB, Cooper, Howard Industries
Transformers, Single-Phase Subsurface	M.L. Thibault	ABB, Howard Industries, Power Partners
Transformers, Single-Phase Subway	M.L. Thibault	ABB, Howard Industries
Transformers, Three-Phase Network, Dry-Type	M.L. Thibault	ABB
Transformers, Three-Phase Network, Liquid Filled	M.L. Thibault	ABB, GE
Transformers, Three-Phase Overhead	M.L. Thibault	Howard Industries, Power Partners
Transformers, Three-Phase Pad-Mounted	M.L. Thibault	ABB, Cooper, Howard Industries,
Transformers, Three-Phase Subsurface	M.L. Thibault	ABB, Howard Industries

[1] Fully electronic, utility grade, meeting ANSI C136.10 requirements, turn on at 1.0 ± 0.2 foot candle (fc), turn off at 1.5 ± 0.3 fc.

Notes

1. This document may be updated between book publishings. Contact your local PG&E representative to obtain the latest version.
2. Each approved manufacturer does not necessarily supply all of the approved variations in each commodity.
3. New Basis is the parent company of Associated Plastic Products and Associated Concrete International.

Revision Notes

Revision 21 has the following changes:

1. Updated Table 1 Pages 1 through 3 to current status.

Prepared by: SXZO

SERVICE TO CELLULAR ON TRANSMISSION TOWER 068179

Asset Type:	Electric Distribution	**Function:**	Design
Issued by:	D. H. Mulkey (DHM3)	**Date:**	07–01–14

Rev. #08: This document replaces PG&E Document 068179, Rev. #07. For a description of the changes, see Page 2.

Purpose and Scope

This document establishes safety policy, tariff interpretation, and electric service installation guidelines when providing service to wireless carriers with antennas located on high-voltage transmission towers and poles (60 kV and above).

General Information

1. When cellular antennas are located on high-voltage transmission towers and poles, take special safety precautions when providing normal 120 V/240 V service to their base-station equipment. The base-station equipment normally is located on a pad (typically a concrete pad) directly under the tower (see Figure 1) or adjacent to the transmission-line tower (see Figure 2). There is a direct metallic path from the antenna to the base-station equipment ground bus, which also is connected to the service neutral and ground from the incoming power service. Should a fault occur on the transmission tower, fault current and voltage could transfer into the service neutral and meter. Normal construction practices for meter installations **do not** always provide adequate protection for personnel touching the meter and standing on the ground from experiencing “touch voltages” in excess of the allowable limits.

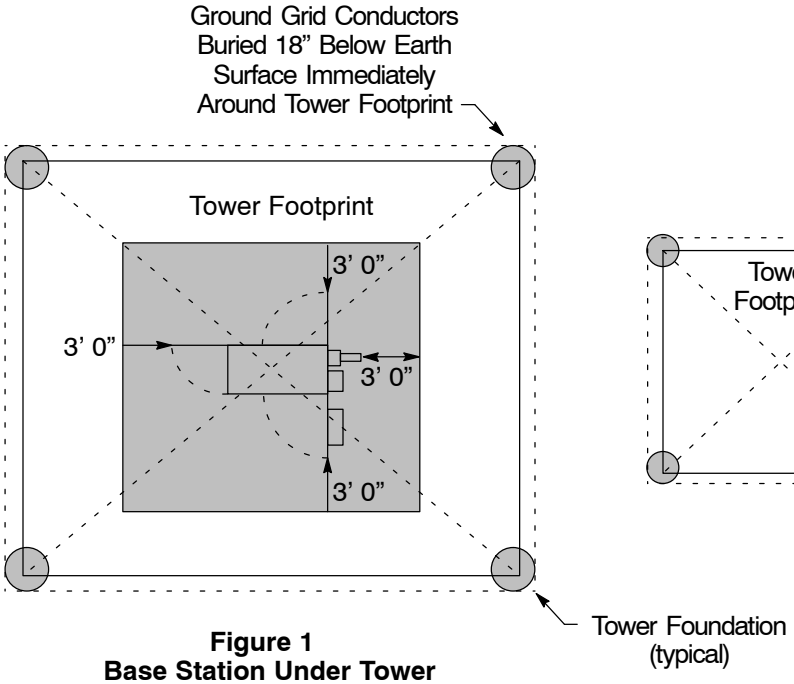

Figure 1
Base Station Under Tower

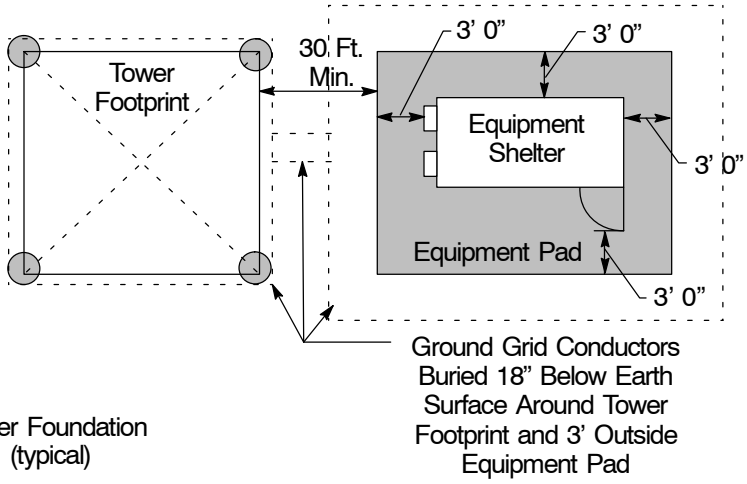

Figure 2
Base Station Not Under Tower

Guidelines

2. The applicant must determine the predicted RMS ground potential rise, GPR_{RMS}. . The GPR_{RMS} may be shown at http://gowx01/Grounding/.
3. If the primary distribution system from which the cell site will be served is a uni-ground system (i.e.,12 kV, 17 kV, 3-wire 21 kV, or a primary neutral), and the predicted GPR is above 12,470 V symmetrical, then a dedicated transformer is required. On 3-wire primary systems, a transmission-line ground fault at the cell-site tower may create a very high ground-potential rise and become a safety concern. The PG&E transformer must be a dedicated transformer, serving only the cell site (now and forever), and the meter pedestal must be installed within the cell-site ground grid with a switch platform in front (see Note 8 below) to ensure that personnel will be standing on the equipment pad when they touch the meter. To ensure that no other customers share the 120 V/240 V neutral connection with these cell sites, these customers must have a dedicated service transformer that feeds only the cell sites.
4. If the GPR is 12,470 V symmetrical or less, **or** if the primary distribution system from which the cell site will be served is a multi-grounded system (i.e., 4-wire, 21 kV common neutral), the site is treated as a normal Rule 16 service **except** the meter pedestal must be installed within the cell-site ground grid with a switch platform in front (see Note 8 below) to ensure that personnel will be standing on the equipment pad when they touch the meter. PG&E is responsible for planning, designing, and engineering its service extension using PG&E's standards for design, materials, and construction (Rule 16 A.1).

Requirements

5. Electric Rule 2 special facility charges apply to any additional costs if the application requires a dedicated transformer.
6. If cell sites are on the same tower, they can share the ground grid and transformer. If the cell sites are on two adjacent towers and the towers are on the same transmission circuit, they can share the ground grid and transformer.
7. Cell sites on towers of different transmission circuits may **not** share the same transformer.
8. The applicant must install a 3' x 3' operating switch platform, Material Code M155036 (Document 034851), centered 6" in front of the meter pedestal **and** interconnect the platform with the cell-site ground grid using a 250 Cu conductor.
9. Any deviation from these guidelines requires a specific engineering analysis and design to develop sufficient compensatory design to provide touch and step protection to personnel working on the meter or cell-site equipment. Please contact applied technology services engineering personnel for assistance.
10. Installations with meters that are not within the cell-site ground grid require an isolation transformer for protection. When performing work is at such a location without an isolation transformer, correct the meter installation by either installing an isolation transformer or by extending the cell-site ground grid to encompass the meter.

Inspections

11. Distribution employees are responsible for inspecting work on the PG&E side of the meter.

Revision Notes

Revision 08 has the following changes:

1. Revised Note 2 above to indicate that the GPR to be used is the symmetrical value.
2. Revised Note 3 above to "uni-ground" instead of "not solidly grounded."
3. Revised Notes 6 and 7 above to refer to "transformer" rather than "service."

Prepared by: ABB1

REQUIREMENTS FOR ALLOWING INSTALLATION OF SUBSURFACE TRANSFORMERS 072149

Asset Type: Electric Distribution **Function:** Design and Construction

Issued by: Lisseth Villareal (LDV2) **Date:** 07-31-15

Rev. #05: This document replaces Document 072149, Rev. #04. For a description of the changes, see Page 3.

Purpose and Scope

This document provides special requirements for allowing the installation of a subsurface transformer. Refer to Engineering Standard Document 076255, Underground Transformer Selection, for determination of the preferred transformer locations.

General Information

Requirements for Allowing Installation of Subsurface Transformer:

Where PG&E has suitable equivalent standard subsurface transformers and the applicant pays the special facilities charges, subsurface transformers may be installed in lieu of pad-mount, however:

1. Subsurface transformers may not be installed:
   - A. Where heavy erosion occurs which may fill the enclosure with soil.
   - B. Where heavy snowfall occurs (generally above 3,000 foot elevation).
   - C. In areas not graded to prevent surface water from readily flowing into enclosure.
   - D. In areas routinely sprayed for mosquitoes.
   - E. Within a flood hazard area (any zone as delineated Flood Insurance Rate Map for the site).
   - F. In areas where design ground water level is within 3 feet below grade.
   - G. In a drainage, a swale, or percolated area, etc.
2. The subsurface enclosure must be designed in accordance with the requirements of Document 062000, and Engineering Material Specification 53 as modified by the provisions herein.
   - A. Low Design Groundwater Level is the condition where the design groundwater level is at or below the excavation depth of the enclosure as noted in Document 062000 (examples: 6’ 6” below grade for the incidental 4’ x 6’ 6” transformer enclosure and 9’ below grade for the incidental 4’ 6” x 8’ 6” UCD transformer enclosure).
   - B. High Design Groundwater Level is the condition where the design groundwater level is above the excavation depth of the enclosure as noted in Document 062000.
3. All requests to use subsurface transformers require soil chloride testing, and determination of design ground water level to determine the suitability of soil conditions if not already disallowed for the reasons in 1.
   - A. Soil chloride testing and design groundwater level determination is the responsibility of the applicant. PG&E does not reimburse the applicant for the cost.
4. Soil chloride testing may be omitted if the applicant elects to provide exterior waterproofing of the subsurface enclosure, or where waterproofing (see Note 8 on Page 2) of the exterior surface is otherwise required such as in high design groundwater table.
   - A. Soil chloride testing must be performed under the supervision of a state licensed professional corrosion or geotechnical engineer.

B. Soil chloride tests shall be taken in the vicinity of the proposed subsurface transformer in a location chosen to be adequately representative of all soil strata that could impact the structure of the enclosure or the equipment in the enclosure, as determined and stated on the report submitted by the state licensed professional engineer in responsible charge.

C. The soil must be tested for chloride by one of the following applicable standards:

Chloride content per ASTM D4327, ASTM D512, CTM 422, or AASHTO T−291

If Chloride content is greater than 5,000 parts per million (ppm), enclosure requires waterproofing.

5. Groundwater level determination shall be performed by a state licensed professional geotechnical engineer and shall be based on site−specific borings and other information as deemed suitable by the state licensed geotechnical engineer in responsible charge.

6. Enclosures in low design groundwater level areas and where chloride content is greater than 5,000 ppm require waterproofing. If chloride content is less than 5,000 ppm, install the enclosure per Document 062000.

7. Enclosures in high design groundwater level areas require waterproofing.

8. Waterproofing includes the following:

A. Sealing of all conduits (terminators) entering the enclosure.

B. Application of waterproofing membrane on all exterior surfaces including the bottom of the bottom slab. Waterproofing may be applied by the supplier or it may be applied in the field. Where extensions are added in the field, seal the joint with the required sealant prior to installation of the extension, then apply the waterproofing over the joint. Note: ground rods shall be installed before backfilling and while temporary control of groundwater is in place. Seal ground rod holes with wet-use epoxy.

C. Application of protection boards on all exterior surfaces including the bottom of the bottom slab to prevent membrane damage during backfill operations.

D. Sealing of joints between enclosure sections or extensions.

E. Sealing of ground rod holes.

F. Do no break out the four knockouts located on the bottom slab of the enclosure.

Materials used for Waterproofing the Enclodosure

1. Waterproofing Membrane: Tremco's TREMproof 250 GC fluid applied elastomeric waterproofing Membrane, minimum 215 mils wet thickness; Carlisle's CCW Miradri 860/861 self−adhering sheet membrane, with manufacturer' recommended adhesive primer; or approved equal

2. Protection Board: Tremco's HPDP−60 protection sheet: Carlisle's CCW 200V Protection Fabric, or approved equal.

3. Rayflate Duct Sealing System (RDSS) conduit seal. Refer to Document 062288.

References	Location	Document
Single-Phase, Subsurface, Round Transformers	UG-1: Transformers	035313
Underground Commercial Distribution, Three-Phase, Subsurface Transformer	UG-1: Transformers	039830
Live-Front, Low-Profile, Single-Phase, Pad-Mounted Transformers	UG-1: Transformers	042761
Radial, Three-Phase, Pad-Mounted Transformers	UG-1: Transformers	043816
Loop-Style, Three-Phase, Pad Mounted Transformers	UG-1: Transformers	045290
Duplex-Type, Three-Phase, Subsurface Transformer	UG-1: Transformers	051776
Horizontal, Single-Phase, Subsurface Transformers	UG-1: Transformers	060578
Primary Electric Underground Equipment Enclosures	UG-1: Enclosures	062000
Application of Underground Distribution Transformers	UG-1: Transformers/Greenbook	062111
Underground Conduits	UG-1: Conduits	062288
Single-Phase, Dead-Front, and Duplex, Pad-Mounted Transformer	UG-1: Transformers	064307
Pad-Mount Transformers, Style IIG and IIH	UG-1: Transformers	072146
Underground Transformer Selection	Greenbook	076255
Design Requirements for Primary Electric Distribution Concrete Enclosures	TIL	EMS 53

Revision Notes

Revision 05 has the following changes:

1. Revised entire document. Portions were moved to new Document 076255 Underground Transformer Selection.

811®

Know what's below.
Call before you dig.

USA Color Coding	
Excavation Site & Underground Facilities	**Marking Color**
Proposed Excavation	White
Temporary Survey Markings	Pink
Electric	Red
Gas – Oil – Steam Chemical	Yellow
Communication CATV	Orange
Water	Blue
Reclaimed Water Irrigation Slurry	Purple
Sewer	Green
Call **811** Two (2) Working Days Before You Dig!	

www.call811.com

USA Identificadores del Código de Color	
Sitio de Excavación y de Instalaciones Subterráneas	**Colored de Identificación**
Excavación Propuesta	Blanco
Marcas Temporarias de Inspección	Rosa
Líneas de Energía Eléctrica, Cables, Conductos y Cables deliluminación	Rojo
Gas, Aceite, Vapor, Petróleo o Materiales Gaseosos	Amarillo
Líneas, Cables o Conductos de Comunicaciones, Alarma o Señales	Naranja
Agua Potable	Azul
Líneas de Lodos, Irrigación y Agua Recuperada	Purpura
Líneas de Alcantarillado y de Drenaje	Verde
Llame **811** a dos (2) días hábiles antes de excavar!	

811®

Determina lo que está bajo tierra.
Llama antes de excavar.

PG&E *Pacific Gas and Electric Company*™

WE DELIVER ENERGY.℠