BAY AREA TOLL AUTHORITY
BAY AREA METRO CENTER
375 BEALE STREET
SAN FRANCISCO, CA 94105

TEL 415.778.6700
WEB www.mtc.ca.gov

DAVE CORTESE, CHAIR
Santa Clara County

JAKE MACKENZIE, VICE CHAIR
Sonoma County and Cities

ALICIA C. AGUIRRE
Cities of San Mateo County

TOM AZUMBRADO
U.S. Department of Housing and Urban Development

JASON BAKER
Cities of Santa Clara County

TOM BATES
Cities of Alameda County

DAVID CAMPOS
City and County of San Francisco

DORENE M. GIACOPINI
U.S. Department of Transportation

FEDERAL D. GLOVER
Contra Costa County

SCOTT HAGGERTY
Alameda County

ANNE W. HALSTED
San Francisco Bay Conservation and Development Commission

STEVE KINSEY
Marin County and Cities

SAM LICCARDO
San Jose Mayor's Appointee

MARK LUCE
Napa County and Cities

JULIE PIERCE
Association of Bay Area Governments

BIJAN SARTIPI
California State Transportation Agency

LIBBY SCHAAF
Oakland Mayor's Appointee

JAMES P. SPERING
Solano County and Cities

ADRIENNE J. TISSIER
San Mateo County

SCOTT WIENER
San Francisco Mayor's Appointee

AMY R. WORTH
Cities of Contra Costa County

STEVE HEMINGER
Executive Director

ANDREW B. FREMIER
Deputy Executive Director

September 23, 2016

Addendum No. 1
to
INVITATION FOR BID
FOR THE RICHMOND-SAN RAFAEL BRIDGE ACCESS IMPROVEMENT PROJECT
Dated August 23, 2016

Dear Bidder:

This letter is Addendum No. 1 to the Invitation for Bid for the Richmond-San Rafael Bridge Access Improvement Project dated August 23, 2016. Where text is revised, deleted text is shown in strike-through format; added text is ***italicized***. The IFB is revised as follows:

Addendum Item	Reference	Change(s)	
1.	IFB, Letter of Invitation, Bid Submission & Bid Opening, Page 2	Interested bidders must submit their bids in sealed envelopes no later than 2:00 p.m. on ~~October 4~~ ***October 25***, 2016. Bids received after that date and time will not be considered. All bids must be completed and submitted on the enclosed Bid Forms, in Part 5 of this IFB, in order to be considered. Bid opening is open to the public and will be held on the due date and time listed above at BATA's offices located at Bay Area Metro Center, 375 Beale Street, Suite 800, San Francisco, CA 94105 in the ~~Yerba Buena Conference Room~~ *Tamalpais Conference Room*.	
2.	IFB, Letter of Invitation, Bidder Selection Timetable, Page 4	Wednesday, August 31, 2016, 1:30 p.m.	Mandatory Pre-Bid Conference
		Friday, September 9, 2016, 4:00 p.m.	Deadline for requests for clarification or exception
		Monday, October 3, 2016, 4:00 p.m.	*Deadline for questions and/or clarification*

<table>
<tr><th>Addendum Item</th><th>Reference</th><th>Change(s)</th></tr>
<tr><td>2.</td><td>Continued</td><td>
<table>
<tr><td>Tuesday, ~~October 4~~ October 25, 2016, 2:00 p.m.</td><td>Closing date & time for receipt of bids & bid opening</td></tr>
<tr><td>Wednesday, ~~October 12,~~ November 9, 2016</td><td>BATA Oversight Committee consideration of recommendation for award</td></tr>
<tr><td>Wednesday, ~~October 12, 2016~~ November 16, 2016 (approx.)</td><td>Issuance of Notice of Award</td></tr>
</table>
</td></tr>
<tr><td>3.</td><td>IFB, Part 3, Instructions to Bidders, 3.1 Definitions, Page 14</td><td>SBE Directory: The list of firms certified by the State of California which is used by BATA and its Contractors to identify SBE potential contractors, subcontractors and suppliers. The SBE directory can be accessed at the website link at ~~http://www.bidsync.com/DPXBisCASB~~. https://caleprocure.ca.gov/pages/PublicSearch/supplier-search.aspx</td></tr>
<tr><td>4.</td><td>IFB, Part 3, Instructions to Bidders, 17. Small Business Enterprise (SBE) Bid Preference, Page 20</td><td>17. Small Business Enterprise (SBE) Bid Preference

SBE Bid Preference will be granted on this IFB. To apply for a SBE Bid Preference, you must complete Bid Form #~~9~~ 8, Designation of Subcontractors in Compliance with BATA Construction Project SBE Program, in Part 5, Bid Forms, of this IFB. Refer to Part 7, General Conditions, for details.</td></tr>
<tr><td>5.</td><td>IFB, Part 4, Contract Forms, Page 21</td><td>The List of Contract Forms is revised as follows:

1. Construction Agreement *
2. Performance Bond *
2A. Performance Bond Dual Obligee Rider*
3. Payment Bond *
3A. Payment Bond Dual Obligee Rider*
4. Warranty Bond*
4A. Warranty Bond Dual Obligee Rider*
5. Alternate IRS Form W-9</td></tr>
</table>

6.	IFB, Part 4, Contract Forms, Performance, Payment Bonds, Warranty Bond, Page 30, Add new Dual Obligee Riders	Contract Form #2A, Performance Bond Dual Obligee Rider, Contract Form #3A, Payment Bond Dual Obligee Rider, Contract Form #4A, Warranty Bond Dual Obligee Rider, are added as attached.
7.	IFB, Part 5, Bid Forms, Bid Form #1	Bid Form #1 is replaced in its entirety with the attached Bid Form #1, Revised.
8.	IFB, Part 6, Special Conditions, 3.1 Payment Bond, Page 71	The Payment Bond must be in an amount of 100% of the Total Contract Price and must inure to the benefit of persons performing labor or furnishing materials in connection with the work of the proposed Contract. This bond must be maintained in full force and effect until all work under the Contract is completed and accepted by BATA, and until all claims for materials and labor have been paid. *The furnished Payment Bond must be accompanied by a Dual Obligee Rider naming BATA as obligee and Caltrans as an additional obligee.*
9.	IFB, Part 6, Special Conditions, 3.2 Performance Bond, Page 71	The Performance Bond must be in an amount of 100% of the Total Contract Price and must insure the faithful performance by you for all work under the Contract. It must also insure the replacing of, or making acceptable, any defective materials or faulty workmanship. *The furnished Performance Bond must be accompanied by a Dual Obligee Rider naming BATA as obligee and Caltrans as an additional obligee.*
10.	IFB, Part 6, Special Conditions, 3.3 Warranty Bond, Page 71	The Warranty Bond must be in an amount of 10% of the Total Contract Price and must insure the faithful performance by you to insure the replacing of, or making acceptable, any defective materials or faulty workmanship for a period of two years. *The furnished Warranty Bond must be accompanied by a Dual Obligee Rider naming BATA as obligee and Marin Municipal Water District as an additional obligee.*
11.	IFB, Part 7, General Conditions, GC-11. Small Business Enterprise (SBE) Bid Preference 11.1 SBE Bid Preference, Page 94	The State of California SBE Directory can be accessed at ~~http://www.bidsync.com/DPXBisCASB~~. *https://caleprocure.ca.gov/pages/PublicSearch/supplier-search.aspx*
12.	IFB, Part 7, General Conditions, GC-11. Small Business Enterprise (SBE) Bid	Following commencement of work under this Contract, you are responsible for achieving and maintaining the participation that allowed the SBE Bid Preference. You must maintain the SBE percentages as indicated in Bid Form #~~9~~ *8*, Designation of

<table>
<tr><td></td><td>Preference, 11.2, Maintaining Participation, Page 94</td><td>Subcontractors in Compliance with BATA Construction Project SBE Program, in Part 5, Bid Forms, of this IFB at the time of bid submittal throughout the term of the Contract.</td></tr>
<tr><td>13.</td><td>Part 10, Construction Details</td><td>The following sections are added as follows:
<table>
<tr><td>2-1.29</td><td>14-11.11</td><td>86-1.01A</td></tr>
<tr><td>9-1.07</td><td>77-1</td><td>86-2.32</td></tr>
</table>
The following sections are replaced with the attached sections:
<table>
<tr><td>2</td><td>6-2.03</td><td>14-11.03</td><td>51-1</td></tr>
<tr><td>5-1.20B(4)</td><td>12-4.04</td><td>14-11.06</td><td></td></tr>
<tr><td>5-1.36D</td><td>12-4.05</td><td>46-3</td><td></td></tr>
</table></td></tr>
<tr><td>14.</td><td>Information Handout</td><td>The following documents are added as part of the Information Handout

Soil Characterization for Sir Francis Drake Blvd EB-580 On-Ramp Area
PG&E Electric & Gas Service Requirements 2016 (Greenbook)
Design Cross Sections
</td></tr>
<tr><td>15.</td><td>Contract Drawings</td><td>The following sections are added as follows:
<table>
<tr><td>147A - U-25</td><td>147C - U-27</td><td>177B - SC-21</td></tr>
<tr><td>147B - U-26</td><td>177A - SC-20</td><td></td></tr>
</table>
The following sections are replaced with the attached sections:
<table>
<tr><td>1 - Title sheet</td><td>94 - WPQC-1</td><td>258 - Q-2</td><td>520 - RW 5</td></tr>
<tr><td>2 - X-1</td><td>105 - DP-1</td><td>259 - Q-3</td><td>526 - RW 6</td></tr>
<tr><td>10 - X-9</td><td>108 - DP-4</td><td>260 - Q-4</td><td>530 - RW 7</td></tr>
<tr><td>12 - X-11</td><td>114 - DD-5</td><td>287 - E-1</td><td>531 - RW 7</td></tr>
<tr><td>14 - X-13</td><td>121 - DQ-4</td><td>289 - E-3</td><td>535 - RW 7</td></tr>
<tr><td>18 - L-1</td><td>123 - DQ-6</td><td>330 - E-44</td><td>540 - Scofield UC</td></tr>
<tr><td>19 - L-2</td><td>127 - U-4</td><td>331 - E-45</td><td>543 - Scofield UC</td></tr>
</table></td></tr>
</table>

		20 - L-3	143 - U-20	348 - E-62	547 - Scofield UC
		33 - L-16	144 - U-21	507 - RW Key	556 - Util. Culvert
		35 - L-18	145 - U-22	509 - RW 1	562 – Sign Mounting
		37 - L-20	146 - U-23	510 - RW 2	563 – Sign Mounting
		38 - L-21	149 - MI-1	511 - RW 3	577 - R-7
		40 - L-23	179 - SCQ-2	512 - RW 4	578 - R-8
		64 – C-19	182 - SCQ-5	514 - RW 4	
		68 - C-23	183 - SCQ-6	518 - RW 4	
		92 - WPC-8	257 - Q-1	519 - RW 4	

The remaining provisions of the IFB, dated August 23, 2016 remain unchanged. In the event of a conflict between this Addendum and the previous version(s), this Addendum shall take precedence. Questions and Answers regarding this IFB are enclosed with this Addendum.

Any questions concerning this Addendum to the IFB should be directed to Chris Lillie, Project Manager, at (415) 778-6737 or clillie@mtc.ca.gov

Sincerely,

Andrew B. Fremier
Deputy Executive Director

ABF:at
J:\CONTRACT\Procurements\Engineer&Architect\BATA\RSRB Access Improvement\Addendum 1\RSR Addendum 1_final.doc

September 23, 2016
Invitation For Bid
Richmond-San Rafael Access Improvement Project
Dated August 23, 2016 as amended by Addendum #1 on September 23, 2016

Questions & Answers #1

Q1	Can you tell me when the contracts for the Richmond-San Rafael Bridge Access Improvement project are due to be awarded. Specifically I was interested in the bike/pedestrian lane project, and what company may be awarded the moveable barrier contract?
A1	See Addendum #1 for tentative award date for Package A. Information for the moveable barrier contract is not available at this time.
Q2	Can you please release the X-Sections for the project so we can perform our dirt work takeoff?
A2	See documents posted at http://bids.mtc.ca.gov/procurements/260.
Q3	Referencing Section 11.1 of the General Conditions and Bid Form 8, Designation of Subcontractors on Page 65 of the Special Provisions. A portion of SBE participation on projects is typically obtained by the usage of SBE trucking firms. SBE trucking firms are not subcontractors, and usually do not have a CSLB license Please confirm that eligible SBE trucking firms can be used as SBE participation and the value of same be counted on Bid Form #8.
A3	In order for work to be counted toward SBE participation, an SBE must perform a commercially useful function. The entire amount of the transportation services will be counted for SBE participation if the services are provided by an SBE trucking company that is responsible for the overall management and supervision of services and that it performs the work using trucks it owns, insures and operates with its own employees. In completing Bid Form #8, Designation of Subcontractors in Compliance with the BATA Construction SBE Program, if a license number is not applicable for the portion of work/bid item, please indicate N/A.
Q4	Can you tell me the current status and bidding schedule for this project?
A4	See Addendum #1, Item #2.
Q5	On page E-1 of the plans you specify Telegra Lane Use Signs. Are you willing to consider an equal? If so, we assume these are 30 x 30 green arrow / red X signs, correct? We also assume they must be NTCIP compatible. Is the pitch 22 or 24? Anything else? On page S-7 of the plans you show a MERGE sign with arrow. Can you tell me the sign dimensions and pitch?

A5	Yes, an equal will be considered. See Addendum #1, Item #13 for Construction Details.
Q6	Do we list SBE suppliers and truckers on Bid Form #8?
A6	SBE suppliers and truckers may be listed on Bid Form #8, however, in order for work to be counted toward SBE participation, an SBE must perform a commercially useful function. Credit for a SBE vendor of materials or supplies is limited to sixty percent (60%) of the amount to be paid to the vendor for the materials or supplies unless the vendor manufactures or substantially alters the goods. Credit for SBE brokers is limited to only the fees and commissions portion of the amount paid. See answer to Question #3 for truckers.
Q7	I've been looking at the specs for the Richmond project going out to bid on Oct 4, 2016, but I can't seem to find the DBE goal. Would you be able to provide me with that information?
A7	This project is not federally funded, so there are no DBE requirements for this IFB or the resultant contract. Bidders may be eligible for a Small Business Enterprise (SBE) Bid Preference. See GC-11, SBE Bid Preference.
Q8	Is LongshoreMan insurance required on this project?
A8	There is no BATA specific contractual requirement for this insurance. However this does not relieve Contractor of compliance with all local, state and federal regulations with respect to your operations in the completion of this contract.
Q9	Referring to sheet 562/579, TYPICAL SECTION-289' TRUSS AND MAIN SPANS, is the traveling maintenance scaffold envelope available at each span, and can it be used by the contractor for structural steel sign mounting work?
A9	This can be requested of Caltrans Maintenance. Prior approval from Caltrans will be required to use the maintenance travelers beneath the upper deck. Your bid should assume that they will not be available.
Q10	Does the architectural texture get painted?
A10	No. The architectural treatment for retaining walls do not require painting.
Q11	What project work requires a marine radio for contact with passing ships under the R-SF bridge?
A11	The marine radio is discussed in Section 5-1.20F Relations with US Coast Guard. The marine radio is required if the contractor uses a boat to access the substation. Otherwise, we do not currently have any other requirements in the documents requiring the contractor to have a marine radio.
Q12	Will the contractor receive free toll when using the bridge for his equipment and his employees?
A12	The marine radio is discussed in Section 5-1.20F Relations with US Coast Guard. The marine radio is required if the contractor uses a boat to access the substation. Otherwise, we do not currently have any other requirements in the documents requiring the contractor to have a marine radio.
Q13	Will the contractor receive free toll when using the bridge for his equipment and his employees?
A13	No. The Contractor and subcontractors must include toll costs in the various bid items required to complete the contract.

Q14	Is any lf the project concrete in a corrosive environment?
A14	On-site soils are classified as non-corrosive per Caltrans guidelines. However, the project limits are within a corrosive marine environment.
Q15	Referring to sheet 551/579, where do the (5) light pedestals on the Scofield Ave. UC get paid for?
A15	The concrete pedestals are paid for in the STRUCTURAL CONCRETE BRIDGE pay item.
Q16	Referring to sheet 538/579, where does this metal drain get paid for?
A16	Shown in Drainage Quantities, Sheet 123/579, 12” Welded Steel Pipe.

J:\CONTRACT\Procurements\Engineer&Architect\BATA\RSRB Access Improvement\Q&A\RSR Q&A 1_final.docx

BID FORM #1 - Revised
September 23, 2016

BID FORM

CONTRACT NO. BATA-013

RICHMOND-SAN RAFAEL BRIDGE ACCESS IMPROVEMENT PROJECT

FROM: BIDDER'S NAME_____

TO: THE BAY AREA TOLL AUTHORITY,

In compliance with the **Invitation to Bid** for this project, the undersigned Bidder, being thoroughly familiar with the terms and conditions of the Contract Documents, hereby proposes and agrees fully to perform the work within the time stated and in strict accordance with the Contract Documents.

The Bidder hereby acknowledges receipt of the following Addenda to the Contract Documents:

Addendum No. _____ Dated _____
Addendum No. _____ Dated _____
Addendum No. _____ Dated _____
Addendum No. _____ Dated _____
Addendum No. _____ Dated _____
Addendum No. _____ Dated _____

Bidder hereby incorporates by reference all provisions of the Contract Documents that follow this Bid Form.

CONTRACT FORM #2A

DUAL OBLIGEE RIDER
PERFORMANCE BOND

This Rider is executed concurrently with and shall be attached to and form a part of Performance Bond No. _____.

WHEREAS, on or about the _____ day of _____, 2016, _____, (hereinafter called the "Principal"), entered into a written agreement bearing the date of _____, 2016 (hereinafter called the "Contract") with BAY AREA TOLL AUTHORITY ("BATA"), (hereinafter called the "Primary Obligee") for the performance of

CONTRACT NO. BATA-013
RICHMOND-SAN RAFAEL BRIDGE ACCESS IMPROVEMENT PROJECT

and all of the Contract Documents attached to or forming a part of said Agreement are hereby referred to and made a part hereof; and

WHEREAS, the Primary Obligee requires that Principal provide a Performance Bond that the California Department of Transportation be named as additional obligee under the Performance Bond; and

WHEREAS, Principal and the Surety have agreed to execute and deliver this Rider concurrently with the execution of Performance Bond No. _____ (hereinafter referred to as "Performance Bond") upon the conditions herein stated.

NOW, THEREFORE, the undersigned herby agree and stipulate as follows:

The California Department of Transportation is hereby added to the Performance Bond as named additional obligee (hereinafter referred to as "Additional Obligees").

The Surety shall not be liable under the Performance Bond to the Primary Obligee, the Additional Obligee, or any of them, unless the Primary Obligee, the Additional Obligee, or any of them, shall make payments to the Principal (or in the case the Surety arranges for completion of the Contract, to the Surety) in accordance with the terms of the Contract as to payments and shall perform all other obligations to be performed under the Contract in all material respects at the time and in the manner therein set forth such that no material default by the Primary Obligee shall have occurred and be continuing under the Contract.

The aggregate liability of the Surety under this Performance Bond, to any or all of the obligees, as their interests may appear, is limited to the penal sum of the Performance Bond. The Additional Obligee's rights hereunder are subject to the same defenses Principal and/or Surety have against the Primary Obligee, provided that the Additional Obligee has received notice and 30 days prior opportunity to cure breach or default by the Primary Obligee under the Contract. The total liability of the Surety shall in no event exceed the amount recoverable from the Principal by the Primary Obligee under the Contract.

The Surety may, at its option, make any payments under the Performance Bond by check issued jointly to all of the obligees.

In the event of a conflict between the Performance Bond and this Rider, this Rider shall govern and control. All references to the Performance Bond, either in the Performance Bond or in this Rider, shall include and refer to the Performance Bond as supplemented and amended by this Rider. Except as herein modified, the Performance Bond shall be and remains in full force and effect.

IN WITNESS WHEREOF this instrument has been duly executed by Principal and Surety on this _____ day of _____, 2016.

PRINCIPAL:	**SURETY:**
_____	_____
(Company)	(Company)
_____	_____
(Signature)	(Signature)
_____	_____
(Name – Please Print)	(Name – Please print)
_____	_____
(Title)	(Title)

NOTE TO SURETY COMPANY:
The following form of acknowledgement should be used. If any other form of acknowledgement is used, there must be submitted a certified copy of un-revoked resolution of authority for the attorney-in-fact.

SURETY COMPANY ATTORNEY-IN-FACT

State of California)
County of _____)

On _____, before me, the undersigned, a Notary Public in and for the State, personally appeared_____, known to me to be the duly authorized Attorney-in-Fact of the corporate Surety named in the within instrument, known to me to be authorized to execute that instrument on behalf of said corporation, known to me to be the person whose name is subscribed to such instrument as the Attorney-in-Fact of said corporation, and acknowledged to me that he (she) subscribed the name of said corporation thereto as Surety, and his (her) own name as Attorney-in-Fact and that said corporation executed the same.

CONTRACT FORM # 3A

DUAL OBLIGEE RIDER
PAYMENT BOND

This Rider is executed concurrently with and shall be attached to and form a part of Payment Bond No. _____.

WHEREAS, on or about the _____ day of _____, 2016, _____, (hereinafter called the "Principal"), entered into a written agreement bearing the date of _____, 2016 (hereinafter called the "Contract") with BAY AREA TOLL AUTHORITY ("BATA"), (hereinafter called the "Primary Obligee") for the performance of

CONTRACT NO. BATA-013
RICHMOND-SAN RAFAEL BRIDGE ACCESS IMPROVEMENT PROJECT

and all of the Contract Documents attached to or forming a part of said Agreement are hereby referred to and made a part hereof; and

WHEREAS, the Primary Obligee requires that Principal provide a payment bond that that the California Department of Transportation be named as additional obligee under the Payment Bond; and

WHEREAS, Principal and the Surety have agreed to execute and deliver this Rider concurrently with the execution of Payment Bond No. _____ (hereinafter referred to as "Payment Bond") upon the conditions herein stated.

NOW, THEREFORE, the undersigned herby agree and stipulate as follows:

The California Department of Transportation is hereby added to the Payment Bond as named additional obligee (hereinafter referred to as "Additional Obligees").

The Surety shall not be liable under the Payment Bond to the Primary Obligee, the Additional Obligee, the claimants under the Payment Bond, or any of them, unless the Primary Obligee, the Additional Obligee, or any of them, shall make payments to the Principal (or in the case the Surety arranges for completion of the Contract, to the Surety) in accordance with the terms of the Contract as to payments and shall perform all other obligations to be performed under the Contract in all material respects at the time and in the manner therein set forth such that no material default by the Primary Obligee shall have occurred and be continuing under the Contract.

The aggregate liability of the Surety under this Payment Bond, to any or all of the obligees, as their interests may appear, is limited to the penal sum of the Payment Bond. The Additional Obligee's rights hereunder are subject to the same defenses Principal and/or Surety have against the Primary Obligee and/or the claimants under the Payment Bond, provided that the Additional Obligee has received notice and 30 days prior opportunity to cure breach or default by the Primary Obligee under the Contract.

The Surety may, at its option, make any payments under the Payment Bond by check issued jointly to all of the obligees.

In the event of a conflict between the Payment Bond and this Rider, this Rider shall govern and control. All references to the Payment Bond, either in the Payment Bond or in this Rider, shall include and refer to the Payment Bond as supplemented and amended by this Rider. Except as herein modified, the Payment Bond shall be and remains in full force and effect.

IN WITNESS WHEREOF this instrument has been duly executed by Principal and Surety on this _____ day of _____, 2016.

PRINCIPAL:	**SURETY:**
_____	_____
(Company)	(Company)
_____	_____
(Signature)	(Signature)
_____	_____
(Name – Please Print)	(Name – Please print)
_____	_____
(Title)	(Title)

NOTE TO SURETY COMPANY:
The following form of acknowledgement should be used. If any other form of acknowledgement is used, there must be submitted a certified copy of un-revoked resolution of authority for the attorney-in-fact.

SURETY COMPANY ATTORNEY-IN-FACT

State of California)
County of _____)

On _____, before me, the undersigned, a Notary Public in and for the State, personally appeared_____, known to me to be the duly authorized Attorney-in-Fact of the corporate Surety named in the within instrument, known to me to be authorized to execute that instrument on behalf of said corporation, known to me to be the person whose name is subscribed to such instrument as the Attorney-in-Fact of said corporation, and acknowledged to me that he (she) subscribed the name of said corporation thereto as Surety, and his (her) own name as Attorney-in-Fact and that said corporation executed the same.

SCHEDULE OF QUANTITIES AND PRICES

CONTRACT NO. BATA-013

RICHMOND-SAN RAFAEL BRIDGE ACCESS IMPROVEMENT PROJECT

The prices quoted below include all applicable taxes, fees, permits, delivery, the cost of Bonds, insurance, and other charges and expenses, direct or indirect, as required.

Item No.	Partial or Final Pay Item (P/F)	Item Code	Item Description	Unit of Measure	Estimated Quantity	Unit Price	Item Total
1		070030	LEAD COMPLIANCE PLAN	LS	1		
2		080050	PROGRESS SCHEDULE (CRITICAL PATH METHOD)	LS	1		
3		100000A	SHUTTLE SERVICE	CDAY	500		
4		120090	CONSTRUCTION AREA SIGNS	LS	1		
5		120100	TRAFFIC CONTROL SYSTEM	LS	1		
6		120120	TYPE III BARRICADE	EA	23		
7		120149	TEMPORARY PAVEMENT MARKING (PAINT)	SQFT	800		
8		120159	TEMPORARY TRAFFIC STRIPE (PAINT)	LF	43000		
9		120165	CHANNELIZER (SURFACE MOUNTED)	EA	300		
10		120200	FLASHING BEACON (PORTABLE)	EA	2		
11		128651	PORTABLE CHANGEABLE MESSAGE SIGN	EA	8		
12		128660	TEMPORARY FLASHING BEACON	EA	2		
13		129000	TEMPORARY RAILING (TYPE K)	LF	24500		
14		129100	TEMPORARY CRASH CUSHION MODULE	EA	110		
15		129110A	TEMPORARY CRASH CUSHION (TYPE ABSORB 350)	EA	30		
16		129150A	TEMPORARY CURB RAMP	EA	1		
17		130100	JOB SITE MANAGEMENT	LS	1		

Item No.	Partial or Final Pay Item (P/F)	Item Code	Item Description	Unit of Measure	Estimated Quantity	Unit Price	Item Total
18		130300	PREPARE STORM WATER POLLUTION PREVENTION PLAN	LS	1		
19		130310	RAIN EVENT ACTION PLAN	EA	45		
20		130320	STORM WATER SAMPLING AND ANALYSIS DAY	EA	24		
21		130330	STORM WATER ANNUAL REPORT	EA	2		
21A		130530	TEMPORARY HYDRAULIC MULCH (BONDED FIBER MATRIX)	SQYD	11000		
21B		130570	TEMPORARY COVER	SQYD	17000		
22		130610	TEMPORARY CHECK DAM	LF	250		
23		130620	TEMPORARY DRAINAGE INLET PROTECTION	EA	134		
24		130640	TEMPORARY FIBER ROLL	LF	4600		
25			NOT USED				
26		130670	TEMPORARY REINFORCED SILT FENCE	LF	1700		
27		130710	TEMPORARY CONSTRUCTION ENTRANCE	EA	5		
28		130730	STREET SWEEPING	LS	1		
29		130900	TEMPORARY CONCRETE WASHOUT	LS	1		
30		141000	TEMPORARY FENCE (TYPE ESA)	LF	2150		
31		141120	TREATED WOOD WASTE	LB	33500		
32		150100	PUBLIC SAFETY PLAN	LS	1		
33		150105A	PROTECTION SYSTEM (CHEVRON FACILITIES)	LS	1		
34		150204	ABANDON CULVERT	LF	310		
35		150221	ABANDON INLET	EA	2		
36		150224	ABANDON MANHOLE	EA	1		
37		150608	REMOVE CHAIN LINK FENCE	LF	1700		

Item No.	Partial or Final Pay Item (P/F)	Item Code	Item Description	Unit of Measure	Estimated Quantity	Unit Price	Item Total
38		150646	REMOVE PEDESTRIAN BARRICADE	EA	1		
39		150661	REMOVE GUARDRAIL	LF	1850		
40		150685	REMOVE IRRIGATION FACILITY	LS	1		
41		150714	REMOVE THERMOPLASTIC TRAFFIC STRIPE	LF	44000		
42		150715	REMOVE THERMOPLASTIC PAVEMENT MARKING	SQFT	2000		
43		150722	REMOVE PAVEMENT MARKER	EA	2300		
44		150744	REMOVE ROADSIDE SIGN (WOOD POST)	EA	38		
45		150747	REMOVE ROADSIDE SIGN (STRAP AND SADDLE BRACKET METHOD)	EA	20		
46		150748	REMOVE ROADSIDE SIGN PANEL	EA	13		
47		150749A	REMOVE BOLLARD	EA	2		
48		150766A	REMOVE BARRIER MOUNTED SIGN	EA	9		
49		150771	REMOVE ASPHALT CONCRETE DIKE	LF	760		
50		150809	REMOVE CULVERT	LF	910		
51		150820	REMOVE INLET	EA	20		
52		150826	REMOVE MANHOLE	EA	1		
53		150832	REMOVE RETAINING WALL	CY	735		
54		150834	REMOVE RETAINING WALL (WOOD)	LF	45		
55		150839A	REMOVE H-PILE	LF	135		
56		150857	REMOVE ASPHALT CONCRETE SURFACING	SQFT	180		
57		150860	REMOVE BASE AND SURFACING	CY	120		
58		152392	RELOCATE ROADSIDE SIGN (WOOD POST)	EA	20		

Item No.	Partial or Final Pay Item (P/F)	Item Code	Item Description	Unit of Measure	Estimated Quantity	Unit Price	Item Total
59		152393	RELOCATE ROADSIDE SIGN (STRAP AND SADDLE BRACKET METHOD)	EA	4		
60		152396	RELOCATE SIGN PANEL	EA	19		
61		152430	ADJUST INLET	EA	4		
62		152432	ADJUST MANHOLE	EA	1		
63		152438	ADJUST FRAME AND COVER TO GRADE	EA	5		
64		152441	ADJUST VALVE BOX TO GRADE	EA	1		
65		152609	MODIFY INLET TO MANHOLE	EA	2		
66		153103	COLD PLANE ASPHALT CONCRETE PAVEMENT	SQYD	75000		
67		153120A	REMOVE CONCRETE (V-DITCH)	LF	500		
68		153130	REMOVE CONCRETE CURB	LF	360		
69		153140	REMOVE CONCRETE SIDEWALK	SQYD	50		
70		153141	REMOVE CONCRETE ISLAND (PORTIONS)	SQYD	900		
71		153213	REMOVE CONCRETE (STRUCTURE)	CY	2		
72		153215	REMOVE CONCRETE (CURB AND GUTTER)	LF	510		
73		153221	REMOVE CONCRETE BARRIER	LF	770		
74		153225	PREPARE CONCRETE BRIDGE DECK SURFACE	SQFT	5100		
75		153226	REFINISH BRIDGE DECK	SQFT	470		
76		153227	FURNISH POLYESTER CONCRETE OVERLAY	CF	410		
77	F	153228	PLACE POLYESTER CONCRETE OVERLAY	SQFT	5100		
78		153230A	REMOVE CONCRETE BARRIER (TYPE 50SC)	LF	1820		
79		153232A	REMOVE CONCRETE BARRIER (TYPE 60C)	LF	60		

Item No.	Partial or Final Pay Item (P/F)	Item Code	Item Description	Unit of Measure	Estimated Quantity	Unit Price	Item Total
80		155003	CAP INLET	EA	3		
81		155232	SAND BACKFILL	CY	10		
82		156585	REMOVE CRASH CUSHION	EA	2		
83		160102	CLEARING AND GRUBBING	LS	1		
84		170101	DEVELOP WATER SUPPLY	LS	1		
85		190101	ROADWAY EXCAVATION	CY	12200		
86		190105	ROADWAY EXCAVATION (TYPE Z-2) (AERIALLY DEPOSITED LEAD)	CY	1350		
87	F	192025	STRUCTURE EXCAVATION (CULVERT)	CY	70		
88	F	192037	STRUCTURE EXCAVATION (RETAINING WALL)	CY	874		
89		192053	STRUCTURE EXCAVATION (TYPE Z-2) (AERIALLY DEPOSITED LEAD)	CY	700		
90	F	192055	STRUCTURE EXCAVATION (SOIL NAIL WALL)	CY	1740		
91	F	193004	STRUCTURE BACKFILL (CULVERT)	CY	37		
92	F	193013	STRUCTURE BACKFILL (RETAINING WALL)	CY	1317		
93	F	193028	STRUCTURE BACKFILL (SOIL NAIL WALL)	CY	75		
94			NOT USED				
95		200002	ROADSIDE CLEARING	LS	1		
96		200114	ROCK BLANKET	SQFT	2100		
97		202006	SOIL AMENDMENT	CY	1		
98		202038	PACKET FERTILIZER	EA	24		
99		202039	SLOW-RELEASE FERTILIZER	LB	3		
100		204035	PLANT (GROUP A)	EA	24		
101		204096	MAINTAIN EXISTING PLANTED AREAS	LS	1		

Item No.	Partial or Final Pay Item (P/F)	Item Code	Item Description	Unit of Measure	Estimated Quantity	Unit Price	Item Total
102		204099	PLANT ESTABLISHMENT WORK	LS	1		
103		205035	WOOD MULCH	CY	11		
104		205050A	FILTER FABRIC	SQYD	96		
105		205051	FOLIAGE PROTECTOR	EA	24		
106		205061	ROOT PROTECTOR	EA	24		
107		206400	CHECK AND TEST EXISTING IRRIGATION FACILITIES	LS	1		
108	P	206559	CONTROL AND NEUTRAL CONDUCTORS (ARMOR-CLAD)	LS	1		
109		206562	1" REMOTE CONTROL VALVE	EA	2		
110	P	206564	1 1/2" REMOTE CONTROL VALVE	EA	1		
111		206631	1" WYE STRAINER ASSEMBLY	EA	2		
112	P	206761	24-32 STATION IRRIGATION CONTROLLER (PEDESTAL MOUNTED)	EA	1		
113		208416	CERTIFY EXISTING BACKFLOW PREVENTERS	LS	1		
114		208442	FLOW SENSOR	EA	1		
115		208448	RISER SPRINKLER ASSEMBLY	EA	24		
116	P	208575	2" GATE VALVE	EA	5		
117	P	208588	3" GATE VALVE	EA	4		
118	P-F	208594	3/4" PLASTIC PIPE (SCHEDULE 40) (SUPPLY LINE)	LF	490		
119	P-F	208595	1" PLASTIC PIPE (SCHEDULE 40) (SUPPLY LINE)	LF	180		
120	P-F	208598	2" PLASTIC PIPE (SCHEDULE 40) (SUPPLY LINE)	LF	630		
121	P	208649	QUICK COUPLING VALVE	EA	2		

Item No.	Partial or Final Pay Item (P/F)	Item Code	Item Description	Unit of Measure	Estimated Quantity	Unit Price	Item Total
122	P	208683	BALL VALVE	EA	2		
123	P	208738	8" CORRUGATED HIGH DENSITY POLYETHYLENE PIPE CONDUIT	LF	300		
124		209988A	PRECAST CONCRETE BENCH	EA	2		
125		210270	ROLLED EROSION CONTROL PRODUCT (NETTING)	SQFT	25200		
126		210300	HYDROMULCH	SQFT	74000		
127		210350	FIBER ROLLS	LF	4600		
128		210420	STRAW	SQFT	74000		
129		210430	HYDROSEED	SQFT	74000		
130		210600	COMPOST	SQFT	74000		
131		210630	INCORPORATE MATERIALS	SQFT	74000		
132		250201	CLASS 2 AGGREGATE SUBBASE	CY	3100		
133		260203	CLASS 2 AGGREGATE BASE	CY	1250		
134		280000	LEAN CONCRETE BASE	CY	750		
135		290201	ASPHALT TREATED PERMEABLE BASE	CY	200		
136		390132	HOT MIX ASPHALT (TYPE A)	TON	4630		
137		390134A	HOT MIX ASPHALT (CROSS SLOPE CORRECTION)	TON	500		
138		390134C	HOT MIX ASPHALT (ADA COMPLIANCE)	TON	240		
139		390137	RUBBERIZED HOT MIX ASPHALT (GAP GRADED)	TON	7300		
140		394053A	SHOULDER RUMBLE STRIP (HMA,GROUND-IN INDENTATIONS)	STA	31		
141		394055A	6" SHOULDER RUMBLE STRIP (HMA,GROUND-IN INDENTATIONS)	STA	8		
142		394074	PLACE HOT MIX ASPHALT DIKE (TYPE C)	LF	110		

Item No.	Partial or Final Pay Item (P/F)	Item Code	Item Description	Unit of Measure	Estimated Quantity	Unit Price	Item Total
143		394075	PLACE HOT MIX ASPHALT DIKE (TYPE D)	LF	30		
144		394076	PLACE HOT MIX ASPHALT DIKE (TYPE E)	LF	100		
145		394090	PLACE HOT MIX ASPHALT (MISCELLANEOUS AREA)	SQYD	4000		
146		397005	TACK COAT	TON	35		
147		410096	DRILL AND BOND (DOWEL BAR)	EA	1610		
148	P	460300	SOIL NAIL	LF	28300		
149			NOT USED				
149A		480605A	TEMPORARY SHORING (RETAINING WALL 4)	LS	1		
149B		480606A	TEMPORARY SHORING (RETAINING WALL 7)	LS	1		
150	P	490782	FURNISH PILING (CLASS 200) (ALTERNATIVE W)	LF	5130		
151		490783	DRIVE PILE (CLASS 200) (ALTERNATIVE W)	EA	150		
152		498052	60" CAST-IN-DRILLED-HOLE CONCRETE PILE (SIGN FOUNDATION)	LF	23		
153	F	510053	STRUCTURAL CONCRETE, BRIDGE	CY	22		
154	F	510060	STRUCTURAL CONCRETE, RETAINING WALL	CY	1430		
155	F	510090	STRUCTURAL CONCRETE, BOX CULVERT	CY	47		
156	F	510502	MINOR CONCRETE (MINOR STRUCTURE)	CY	83		
156A		510528A	MINOR CONCRETE (ANCHOR BLOCK)	CY	5		
157	F	511035	ARCHITECTURAL TREATMENT	SQFT	31700		
158		511110	DRILL AND BOND DOWEL (CHEMICAL ADHESIVE)	EA	36		
159	P-F	520101	BAR REINFORCING STEEL	LB	11530		
160	P-F	520103	BAR REINFORCING STEEL (RETAINING WALL)	LB	193000		

Item No.	Partial or Final Pay Item (P/F)	Item Code	Item Description	Unit of Measure	Estimated Quantity	Unit Price	Item Total
161	F	530200	STRUCTURAL SHOTCRETE	CY	240		
162	P-F	550203	FURNISH STRUCTURAL STEEL (BRIDGE)	LB	17000		
163	P-F	550204	ERECT STRUCTURAL STEEL (BRIDGE)	LB	17000		
164	F	560218	FURNISH SIGN STRUCTURE (TRUSS)	LB	15020		
165	F	560219	INSTALL SIGN STRUCTURE (TRUSS)	LB	15020		
166		560244	FURNISH LAMINATED PANEL SIGN (1"-TYPE A)	SQFT	200		
167		560248	FURNISH SINGLE SHEET ALUMINUM SIGN (0.063"-UNFRAMED)	SQFT	750		
168		562002	METAL (BARRIER MOUNTED SIGN)	LB	625		
169		562005A	METAL (WALL MOUNTED SIGN)	LB	360		
170		566011	ROADSIDE SIGN - ONE POST	EA	47		
171		566012	ROADSIDE SIGN - TWO POST	EA	4		
172		568001	INSTALL SIGN (STRAP AND SADDLE BRACKET METHOD)	EA	11		
173		568017	INSTALL ROADSIDE SIGN PANEL ON EXISTING POST	EA	12		
174	P-F	575005	TIMBER RETAINING WALL	SQFT	35		
175		597500A	PREPARE AND PAINT POSTMILE MARKINGS ON BRIDGE BARRIER	SQFT	64		
176	P	620100	18" ALTERNATIVE PIPE CULVERT	LF	1800		
177	P	620140	24" ALTERNATIVE PIPE CULVERT	LF	86		
178	P	665017	18" CORRUGATED STEEL PIPE (.079" THICK)	LF	37		
179	P	665717	18" SLOTTED CORRUGATED STEEL PIPE (.079" THICK)	LF	150		

Item No.	Partial or Final Pay Item (P/F)	Item Code	Item Description	Unit of Measure	Estimated Quantity	Unit Price	Item Total
180	P	681103	3" PLASTIC PIPE (EDGE DRAIN)	LF	400		
181	P	681107	3" PLASTIC PIPE (EDGE DRAIN OUTLET)	LF	110		
182			NOT USED				
183		700617	DRAINAGE INLET MARKER	EA	26		
184	P	703533	12" WELDED STEEL PIPE (.250" THICK)	LF	86		
185		705311	18" ALTERNATIVE FLARED END SECTION	EA	1		
186	F	721015	ROCK SLOPE PROTECTION (LIGHT, METHOD B)	CY	3		
187	F	722020	GABION	CY	72		
188	P	729011	ROCK SLOPE PROTECTION FABRIC (CLASS 8)	SQYD	12		
189		730040	MINOR CONCRETE (GUTTER)	LF	1530		
190		731502	MINOR CONCRETE (MISCELLANEOUS CONSTRUCTION)	CY	113		
191		731627	MINOR CONCRETE (CURB, SIDEWALK AND CURB RAMP)	CY	190		
192	P-F	750001	MISCELLANEOUS IRON AND STEEL	LB	17600		
193		750500A	REMOVABLE STEEL BOLLARD	EA	2		
194	P-F	750501	MISCELLANEOUS METAL (BRIDGE)	LB	2300		
194A		770006A	6" WATERLINE RELOCATION (MMWD)	LF	450		
195	P	800360	CHAIN LINK FENCE (TYPE CL-6)	LF	10		
196	P	800400A	CHAIN LINK FENCE (TYPE CL-8, WITH BARBED WIRE)	LF	80		
197	P	800400A	CHAIN LINK RAILING (TYPE CL-8 MOD 1)	LF	465		
198	P	800400B	CHAIN LINK RAILING (TYPE CL-8 MOD 2)	LF	680		

Item No.	Partial or Final Pay Item (P/F)	Item Code	Item Description	Unit of Measure	Estimated Quantity	Unit Price	Item Total
199	P	802601	14' CHAIN LINK GATE (TYPE CL-6)	EA	1		
200		820104A	FG 300 TURNPIKE GRADE CURB SYSTEM	EA	40		
201		820105	DELINEATOR (SPECIAL)	EA	8		
202		820107	DELINEATOR (CLASS 1)	EA	25		
203		820116A	CONCRETE BARRIER DELINEATOR	EA	170		
204		820118	GUARD RAILING DELINEATOR	EA	35		
205		820134	OBJECT MARKER (TYPE P)	EA	8		
206		820151	OBJECT MARKER (TYPE L-1)	EA	5		
207	P	832007	MIDWEST GUARDRAIL SYSTEM (WOOD POST)	LF	1110		
208		832015	MIDWEST GUARDRAIL SYSTEM (7' WOOD POST)	LF	260		
209		832070	VEGETATION CONTROL (MINOR CONCRETE)	SQYD	660		
210	P-F	833032	CHAIN LINK RAILING (TYPE 7)	LF	340		
211	P-F	833033A	BICYCLE RAILING	LF	4400		
212		833077	PEDESTRIAN BARRICADE	EA	3		
213	P-F	833085	PIPE HANDRAILING	LF	40		
214	P-F	839521	CABLE RAILING	LF	1420		
215	P	839543	TRANSITION RAILING (TYPE WB-31)	EA	6		
216		839555	END CAP	EA	11		
217		839581	END ANCHOR ASSEMBLY (TYPE SFT)	EA	7		
218		839584	ALTERNATIVE IN-LINE TERMINAL SYSTEM	EA	1		
219		839585	ALTERNATIVE FLARED TERMINAL SYSTEM	EA	8		
220		839607A	ALTERNATIVE CRASH CUSHION SYSTEM	EA	5		

Item No.	Partial or Final Pay Item (P/F)	Item Code	Item Description	Unit of Measure	Estimated Quantity	Unit Price	Item Total
221	P	839650A	CONCRETE BARRIER GATE (ARMORGUARD GATE SYSTEM)	EA	1		
222		839699A	CONCRETE BARRIER (TYPE 60P Mod)	LF	105		
223		839703	CONCRETE BARRIER (TYPE 60C)	LF	640		
224		839703A	CONCRETE BARRIER (TYPE 60C MOD)	LF	54		
225		839704	CONCRETE BARRIER (TYPE 60D)	LF	780		
226		839710	CONCRETE BARRIER (TYPE 60S)	LF	1160		
227		839711	CONCRETE BARRIER (TYPE 60SA)	LF	85		
228		839712	CONCRETE BARRIER (TYPE 60SC)	LF	1120		
229		839714A	CONCRETE BARRIER (TYPE 60SC Mod)	LF	2650		
230	F	839717	CONCRETE BARRIER (TYPE 732 MODIFIED)	LF	710		
231	F	839721	CONCRETE BARRIER (TYPE 732A)	LF	340		
232	P-F	839740	CALIFORNIA ST-10 BRIDGE RAIL	LF	34		
233		840504	4" THERMOPLASTIC TRAFFIC STRIPE	LF	6800		
234		840505	6" THERMOPLASTIC TRAFFIC STRIPE	LF	310		
235		840506	8" THERMOPLASTIC TRAFFIC STRIPE	LF	750		
236		840507	6" THERMOPLASTIC TRAFFIC STRIPE (BROKEN 8-4)	LF	50		
237		840508	8" THERMOPLASTIC TRAFFIC STRIPE (BROKEN 12-3)	LF	620		
238		840515	THERMOPLASTIC PAVEMENT MARKING	SQFT	580		

Item No.	Partial or Final Pay Item (P/F)	Item Code	Item Description	Unit of Measure	Estimated Quantity	Unit Price	Item Total
239		840516	THERMOPLASTIC PAVEMENT MARKING (ENHANCED WET NIGHT VISIBILITY)	SQFT	4400		
240		840526	4" THERMOPLASTIC TRAFFIC STRIPE (BROKEN 17-7)	LF	1900		
241		840526A	4" THERMOPLASTIC TRAFFIC STRIPE (BROKEN 34-14)	LF	14500		
242		840655	PAINT TRAFFIC STRIPE (1-COAT)	LF	14800		
243		840656	PAINT TRAFFIC STRIPE (2-COAT)	LF	51000		
244		840665	PAINT PAVEMENT MARKING (1-COAT)	SQFT	1300		
245		846001	4" THERMOPLASTIC TRAFFIC STRIPE (ENHANCED WET NIGHT VISIBILITY)	LF	75000		
246		846004	4" THERMOPLASTIC TRAFFIC STRIPE (ENHANCED WET NIGHT VISIBILITY) (BROKEN 17-7)	LF	1750		
247		846004A	4" THERMOPLASTIC TRAFFIC STRIPE (ENHANCED WET NIGHT VISIBILITY) (BROKEN 34-14)	LF	30000		
248		846007	6" THERMOPLASTIC TRAFFIC STRIPE (ENHANCED WET NIGHT VISIBILITY)	LF	150		
249		846008A	6" THERMOPLASTIC TRAFFIC STRIPE (ENHANCED WET NIGHT VISIBILITY) (BROKEN 6-2)	LF	200		
250		846009	8" THERMOPLASTIC TRAFFIC STRIPE (ENHANCED WET NIGHT VISIBILITY)	LF	6000		
251		846010	8" THERMOPLASTIC TRAFFIC STRIPE (ENHANCED WET NIGHT VISIBILITY) (BROKEN 12-3)	LF	1000		

Item No.	Partial or Final Pay Item (P/F)	Item Code	Item Description	Unit of Measure	Estimated Quantity	Unit Price	Item Total
252	P	850101	PAVEMENT MARKER (NON-REFLECTIVE)	EA	3650		
253	P	850111	PAVEMENT MARKER (RETROREFLECTIVE)	EA	2800		
254		860090	MAINTAINING EXISTING TRAFFIC MANAGEMENT SYSTEM ELEMENTS DURING CONSTRUCTION	LS	1		
255		860297A	SIGNAL AND LIGHTING (STAGE CONSTRUCTION)	LS	1		
256		860468A	LIGHTING (STAGE CONSTRUCTION)	LS	1		
257		861547A	TRAFFIC OPERATIONS SYSTEM (STAGE CONSTRUCTION)	LS	1		
257A		868900A	ELECTRICAL UNDERGROUNDING (PG&E)	LF	500		
258		872131A	MODIFYING EXISTING ELECTRICAL SYSTEM (SIGNAL AND LIGHTING) (LOCATION 1)	LS	1		
259		872132A	MODIFYING EXISTING ELECTRICAL SYSTEM (SIGNAL AND LIGHTING) (LOCATION 2)	LS	1		
260		872133A	MODIFYING EXISTING ELECTRICAL SYSTEM (SIGNAL AND LIGHTING) (LOCATION 3)	LS	1		
261		872134A	MODIFYING EXISTING ELECTRICAL SYSTEM (LIGHTING)	LS	1		
262		872135A	MODIFYING EXISTING ELECTRICAL SYSTEM (TRAFFIC OPERATIONS SYSTEM)	LS	1		
263		872136A	MODIFYING EXISTING ELECTRICAL SYSTEM (ELECTRIC SERVICE FOR IRRIGATION)	LS	1		
264		999990	MOBILIZATION	LS	1		

The Total Contract Price shall be the total of the Bid Item above.

	In Words	Numbers ($):
TOTAL CONTRACT PRICE:		

SUBMITTED BY:

Full and Correct Name of Bidder:

_____

_____

Business Address:

_____

_____

Phone: _____

Fax: _____

California Contractor's License:

Number: _____

Class: _____

Expires: _____

CONTRACTOR INFORMATION

The names of all persons as principals interested in the foregoing bid are as follows:

(IMPORTANT NOTICE: If Bidder or other interested person is a corporation, give legal name of corporation, and names of the President and Secretary thereof; if a partnership, give name of the firm, also names of all individual partners composing firm; if Bidder or other interested person is an individual, give first and last names in full. If a Bidder is a joint venture, supply the above information for each joint venture partner.)

_____

_____

_____

_____

_____

The person signing this Bid Form for the Bidder certifies that he or she is authorized by the Bidder to do so and that the Bidder is bound contractually by that signature.

Signature _____

Name _____
(Print)

Title _____

Date _____

2 BIDDING

Add to Part 5 – Bid Forms:

The Department makes the following supplemental project information available:

Supplemental Project Information

Means	Description
Included in the *Information Handout*	Geotechnical Design & Materials Report. Richmond-San Rafael Bridge Access Improvement Project. EA No. 04-2J6800, April 29, 2016
	Foundation Report – Retaining Walls. Richmond-San Rafael Bridge Access Improvement Project. EA No. 04-2J6800, June 22, 2016
	Soil Characterization Report. Richmond-San Rafael Bridge Access Improvement Project. Second Revision: May 19, 2016
	Addendum - Soil Characterization Report. Richmond-San Rafael Bridge Access Improvement Project. May 19, 2016
	Additional Soil Characterization Sir Francis Drake Blvd. EB-580 On-Ramp Area
	Caltrans Temporary Pedestrian Facilities Handbook, June 2014
	Electric & Gas Service Requirements 2016 (PG&E Greenbook)
	Chevron Utility Tunnel Staging Plan, June 28, 2016
	Design Cross Sections
Available as specified in the *Standard Specifications*	As-built drawings: Richmond-San Rafael Bridge, Bridge 28-100, Contract 04-0438U4, July 19, 1999
	As-built drawings: Richmond-San Rafael Bridge, Bridge 28-100, Contract 04-003214, February 6, 1989
	As-built drawings: Richmond-San Rafael Bridge, Bridge 28-100, Contract 1004, Original as-built, October 1956
	As-built drawings: Scofield Avenue Undercrossing, Bridge 28-0140, Bridge Deck Replacement, Contract 04-1A3201, June 4, 2012
	As-built drawings: Richmond San Rafael Bridge Richmond Approach, Utility Culvert “B”, Unknown Contract No., October 25, 1954
	As-built drawings: San Quentin Street Undercrossing (Modification)), Bridge 27-70, Contract 04-399214, January 2, 1979
	As-built drawings: Retaining Wall 4, East of Scofield Tie Back Retaining Wall, Contract 04-118774, June 2, 1986
	As-built drawings: Retaining Wall 7, Marine Street UC to Scofield Avenue General Highway, Contract 04-118994, September 8, 1989

Replace RSS section 2-1.29 with:

2-1.29 RESERVED

Add to the 1st paragraph of section 5-1.20B(4):

Arsenic is present in earth material on the job site.

The soil characterization investigation detected concentrations of arsenic on the job site generally between 2.7 (mg/kg) and 9.3 (mg/kg) with one sample location with levels of 19 (mg/kg) and 26 (mg/kg).

Refer to the site investigation report, dated May 19, 2016, included in the Information Handout for the locations and the analytical test results for the soil samples Submit a detailed health and safety plan (HSP), signed by a CIH, that identifies potential health and safety hazards associated with work involving soil containing arsenic levels over the Environmental Screening Levels (ESLs) and specifies work practices that will be used to protect workers from those hazards under 22 CA Code of Regs and 8 CA Code of Regs. Refer to section 14-11.11 for the Health and Safety Plan requirements.

Disclose the arsenic concentration of the material to the receiving property owner. You are responsible for any additional sampling and analysis required by the receiving property owner.

Add to section 5-1.36D:

Installation of the utilities shown in the following table requires coordination with your activities. You are to provide exclusive, unfettered access to all third parties while their work is being performed. Make the necessary arrangements with the utility company through the Engineer and submit a schedule:

1. Verified by a representative of the utility company
2. Allowing at least the time shown for the utility owner to complete its work
3. Provide written notices to the Engineer one month and again one week before the utilities are to start work.

Utility Relocation and Contractor-Arranged Time for the Relocation

Utility	Utility address	Location	Days
PG&E 12KV overhead electrical and utility pole	1850 Gateway Blvd, 7th Floor, Concord, CA 94520 (925) 270-2771	EB Route 580 Stenmark Dr Off Ramp and Stenmark Dr	15 working days
EBMUD 16” water	375 11th St, MS 504, Oakland, CA 94607 (866) 403-2683	EB Route 580 Stenmark Dr Off Ramp	40 working days

Working days duration in table above are not concurrent durations.

Utility information shown is incomplete. Utility location activities must be concurrent with construction activities for the utilities shown in the following table. Make arrangements with the utility owners to coordinate utility location activities.

Utilities to be Located Concurrently with Construction Activities

Utility	Location
Caltrans 4-inch sewer force main	“BP1” line Sta. 1015+00 +/- to 1039+50 +/-

6 CONTROL OF MATERIALS

Add to section 6-2.03:

The Department furnishes you with:

- Model 2070 controller assemblies, including controller units, completely wired controller cabinets, and detector sensor units
- Model 2070 controller units

The Department furnishes you with completely wired controller cabinets with auxiliary equipment but without controller unit at Caltrans Maintenance Station, 30 Rickard Street, San Francisco, CA. At least 48 hours before you pick up the materials, inform the Engineer of what you will pick up and when you will pick it up.

The Department furnishes you with a Model 500 changeable message sign, wiring harness, and controller assembly, including the controller unit and completely wired cabinet, at Caltrans Maintenance Station, 30 Rickard Street, San Francisco, CA. At least 48 hours before you pick up the materials, inform the Engineer of what you will pick up and when you will pick it up.

Refer to section 77-1 for materials furnished by the Marin Municipal Water District.

Replace section 9-1.07 with:

9-1.07 RESERVED

Replace "Reserved" in section 12-4.04 with:

Lane Closure Restriction for Designated Holidays and Special Days

Thu	Fri	Sat	Sun	Mon	Tues	Wed	Thu	Fri	Sat	Sun
x	**H** xx	xx	xx							
	SD xx									
x	xx	**H** xx	xx							
		SD xx								
	x	xx	**H** xx	xx						
			SD xx							
	x	xx	xx	**H** xx	xxx					
	x	xx	xx	**SD** xx	xxx					
				x	**H** xx					
				x	**SD** xx					
					x	**H** xx				
						SD xx				
						x	**H** xx	xx	xx	xx
							SD xx			

Legend:

	Refer to lane requirement charts
x	The full width of the traveled way must be open for use by traffic after 5:00am.
xx	The full width of the traveled way must be open for use by traffic.
xxx	The full width of the traveled way must be open for use by traffic until 12:00am.
H	Designated holiday
SD	Special day

Replace "Reserved" in section 12-4.05B with:

Chart no. 1
Freeway/Expressway Lane Requirements

County: Contra Costa / Marin | Route/Direction: Westbound 580 | PM: CC R5.0/7.8, Mrn 0.0/3.3

Closure limits: From East of Marine Street Interchange to Sir Francis Drake Blvd Off-Ramp

Hour	24	1	2	3	4	5	6	7	8	9	10	11	12	13	14	15	16	17	18	19	20	21	22	23	24
Mon-Thu	1	1	1	1	1	1																		1	
Fri	1	1	1	1	1	1																1	1	1	
Sat	1	1	1	1	1	1	1																	1	
Sun	1	1	1	1	1	1	1	1															1	1	

Legend:

1	Provide at least 1 through freeway lane open in direction of travel
	Work allowed within the highway where shoulder or lane closure is not required

REMARKS:

Chart no. 2
Freeway/Expressway Lane Requirements

County: Contra Costa / Marin | Route/Direction: Eastbound 580 | PM: CC R5.0/7.8, Mrn 0.0/3.3

Closure limits: From Sir Francis Drake Blvd On-Ramp to Castro Street Interchange

Hour	24	1	2	3	4	5	6	7	8	9	10	11	12	13	14	15	16	17	18	19	20	21	22	23	24
Mon-Thu	1	1	1	1	1																	1	1	1	
Fri	1	1	1	1	1	1																1	1	1	
Sat	1	1	1	1	1	1	1	1																1	
Sun	1	1	1	1	1	1	1	1															1	1	

Legend:

1	Provide at least 1 through freeway lane open in direction of travel
	Work allowed within the highway where shoulder or lane closure is not required

REMARKS: Must provide two lanes from I-580 eastbound/Stenmark Drive on-ramp (approximately CC-M Sta. 1025+00) to at least CC-M Sta. 1030+00.

Replace "Reserved" in section 12-4.05E with:

Chart no. 3
Complete Ramp Closure Hours/Ramp Lane Requirements

County: Marin	Route/Direction: Eastbound 580	PM: Mrn 2.54

Closure limits: On-Ramp from Main Street

Hour	24	1	2	3	4	5	6	7	8	9	10	11	12	13	14	15	16	17	18	19	20	21	22	23	24
Mon-Thu	C	C	C	C	C	C					C	C	C	C								C	C	C	
Fri	C	C	C	C	C	C					C	C	C	C								C	C	C	
Sat	C	C	C	C	C	C														C	C	C	C	C	
Sun	C	C	C	C	C	C														C	C	C	C	C	

Legend:

C	Ramp may be closed completely
	Work allowed within the highway where shoulder or lane closure is not required

REMARKS:

1. Detour traffic per Detour Plan No. 3 on MI sheets.
2. Outside of the requirements specified in the above chart, you may request and submit for approval, a full weekend closure between 9:00 p.m. Friday to 6:00 a.m. Monday for a total of four (4) weekends. A full weekend closure will not be granted for any weekend that has a lane closure restriction for a designated holiday or a special day in accordance with section 12-4.04.

Chart no. 4
Complete Ramp Closure Hours/Ramp Lane Requirements

County: Marin | Route/Direction: Eastbound 580 | PM: Mrn 2.82

Closure limits: Off-Ramp to Main Street

Hour	24	1	2	3	4	5	6	7	8	9	10	11	12	13	14	15	16	17	18	19	20	21	22	23	24
Mon-Thu	C	C	C	C	C	C														C	C	C	C	C	
Fri	C	C	C	C	C	C														C	C	C	C	C	
Sat	C	C	C	C	C	C														C	C	C	C	C	
Sun	C	C	C	C	C	C														C	C	C	C	C	

Legend:

C Ramp may be closed completely

Work allowed within the highway where shoulder or lane closure is not required

REMARKS:

1. Detour traffic per Detour Plan No. 2 on MI sheets.
2. Outside of the requirements specified in above chart, you may request and submit for approval, a full weekend closure between 7:00 p.m. Friday to 6:00 a.m. Monday for a maximum of four (4) weekends. A full weekend closure will not be granted for any weekend that has a lane closure restriction for a designated holiday or a special day in accordance with section 12-4.04.
3. Maintain bicycle access.

Chart no. 5
Complete Ramp Closure Hours/Ramp Lane Requirements

County: Contra Costa | Route/Direction: Westbound 580 | PM: CC 6.0

Closure limits: Off-Ramp to Stenmark Drive

Hour	24	1	2	3	4	5	6	7	8	9	10	11	12	13	14	15	16	17	18	19	20	21	22	23	24
Mon-Thu	C	C	C	C	C	C																C	C	C	
Fri	C	C	C	C	C	C																C	C	C	
Sat	C	C	C	C	C	C																C	C	C	
Sun	C	C	C	C	C	C																C	C	C	

Legend:

C Ramp may be closed completely

Work allowed within the highway where shoulder or lane closure is not required

REMARKS: Detour traffic per Detour Plan No. 7 on MI sheets.

Chart no. 6
Complete Ramp Closure Hours/Ramp Lane Requirements

County: Contra Costa | Route/Direction: Westbound 580 | PM: CC 6.1

Closure limits: On-Ramp from Stenmark Drive

Hour	24	1	2	3	4	5	6	7	8	9	10	11	12	13	14	15	16	17	18	19	20	21	22	23	24
Mon-Thu	C	C	C	C	C	C														C	C	C	C	C	
Fri	C	C	C	C	C	C														C	C	C	C	C	
Sat	C	C	C	C	C	C														C	C	C	C	C	
Sun	C	C	C	C	C	C	C	C	C	C	C	C								C	C	C	C	C	

Legend:

C	Ramp may be closed completely
	Work allowed within the highway where shoulder or lane closure is not required

REMARKS:

1. Detour traffic per Detour Plan No. 6 on MI sheets.
2. Outside of the requirements specified in above chart, you may request and submit for approval, a full Saturday closure between 7:00 p.m. Friday to 12:00 p.m. Sunday for a maximum of four (4) Saturdays. A full Saturday closure will not be granted for any Saturday that has a lane closure restriction for a designated holiday or a special day in accordance with section 12-4.04.

Chart no. 7
Complete Ramp Closure Hours/Ramp Lane Requirements

County: Contra Costa | Route/Direction: Eastbound 580 | PM: CC R5.6

Closure limits: Off-Ramp to Marine Street

Hour	24	1	2	3	4	5	6	7	8	9	10	11	12	13	14	15	16	17	18	19	20	21	22	23	24
Mon-Thu	C	C	C	C	C	C																	C	C	
Fri	C	C	C	C	C	C																C	C	C	
Sat	C	C	C	C	C	C	C	C	C	C	C												C	C	
Sun	C	C	C	C	C	C	C	C	C	C	C												C	C	

Legend:

C	Ramp may be closed completely
	Work allowed within the highway where shoulder or lane closure is not required

REMARKS: Detour traffic per Detour Plan No. 5A on MI sheets.

Chart no. 8
Complete Ramp Closure Hours/Ramp Lane Requirements

County: Contra Costa	Route/Direction: Eastbound 580	PM: CC R5.4

Closure limits: On-Ramp from Marine Street and Castro Street

Hour	24	1	2	3	4	5	6	7	8	9	10	11	12	13	14	15	16	17	18	19	20	21	22	23	24
Mon-Thu	C	C	C	C	C	C														C	C	C	C	C	
Fri	C	C	C	C	C	C														C	C	C	C	C	
Sat	C	C	C	C	C	C														C	C	C	C	C	
Sun	C	C	C	C	C	C	C	C	C	C	C	C								C	C	C	C	C	

Legend:

C	Ramp may be closed completely
	Work allowed within the highway where shoulder or lane closure is not required

REMARKS:

1. Detour traffic per Detour Plan No. 5B and 5C on MI sheets.
2. Outside of the requirements specified in above chart, you may request and submit for approval, a full Saturday closure between 7:00 p.m. Friday to 12:00 p.m. Sunday for a maximum of four (4) Saturdays. A full Saturday closure will not be granted for any Saturday that has a lane closure restriction for a designated holiday or a special day in accordance with section 12-4.04.

Chart no. 9
Complete Ramp Closure Hours/Ramp Lane Requirements

County: Contra Costa	Route/Direction: Eastbound 580	PM: CC 5.9

Closure limits: On-Ramp from Stenmark Drive

Hour	24	1	2	3	4	5	6	7	8	9	10	11	12	13	14	15	16	17	18	19	20	21	22	23	24
Mon-Thu	C	C	C	C	C	C														C	C	C	C	C	
Fri	C	C	C	C	C	C														C	C	C	C	C	
Sat	C	C	C	C	C	C														C	C	C	C	C	
Sun	C	C	C	C	C	C	C	C	C	C	C	C								C	C	C	C	C	

Legend:

C	Ramp may be closed completely
	Work allowed within the highway where shoulder or lane closure is not required

REMARKS:

1. Detour traffic per Detour Plan No. 4 on MI sheets.
2. Provide toll reimbursement for motorists needing to use this detour.
3. Outside of the requirements specified in above chart, you may request and submit for approval, a full Saturday closure between 7:00 p.m. Friday to 12:00 p.m. Sunday for a maximum of four (4) Saturdays. A full Saturday closure will not be granted for any Saturday that has a lane closure restriction for a designated holiday or a special day in accordance with section 12-4.04.

Chart no. 10
Complete Ramp Closure Hours/Ramp Lane Requirements

County: Marin | Route/Direction: Eastbound 580 | PM: Mrn 3.18

Closure limits: On-Ramp from Sir Francis Drake Boulevard

Hour	24	1	2	3	4	5	6	7	8	9	10	11	12	13	14	15	16	17	18	19	20	21	22	23	24
Mon-Thu		C	C	C	C	C																			C
Fri		C	C	C	C	C																			C
Sat		C	C	C	C	C	C	C																	
Sun		C	C	C	C	C	C	C																	C

Legend:

C	Ramp may be closed completely
	Work allowed within the highway where shoulder or lane closure is not required

REMARKS:

1. Detour traffic per Detour Plan No. 1 on MI sheets.
2. Maintain bicycle access.

Replace "Reserved" in section 12-4.05F with:

Chart no. 11
Conventional Highway Lane Requirements

County: Marin | Route/Direction: Main St/ NB&SB | PM: Mrn 2.82

Closure limits: Main St between WB 580 and EB 580 ramps

Hour	24	1	2	3	4	5	6	7	8	9	10	11	12	13	14	15	16	17	18	19	20	21	22	23	24
Mon-Thu	R	R	R	R	R																		R	R	
Fri	R	R	R	R	R																		R	R	
Sat	R	R	R	R	R																		R	R	
Sun	R	R	R	R	R																		R	R	

Legend:

R	Provide at least 1 through traffic lane, not less than 12 feet in width, for use in both directions of travel (Reversing Control), with no physical barriers (K-rail or curbs on either side). Main Street traffic may be stopped in one direction for periods not to exceed 5 minutes.

REMARKS: The maximum length of a single stationary lane closure is 0.2 mile.

Replace section 14-11.03 with:

14-11.03 MATERIAL CONTAINING HAZARDOUS WASTE CONCENTRATIONS OF AERIALLY DEPOSITED LEAD

14-11.03A General

14-11.03A(1) Summary

Section 14-11.03 includes specifications for hazardous waste management while excavating, stockpiling, transporting, placing, and disposing of material containing hazardous waste concentrations of aerially deposited lead (ADL).

ADL is present within the project limits.

14-11.03A(2) Definitions

Type Y-1: Material that contains ADL in average concentrations (using the 90 percent Upper Confidence Limit) of 1.5 mg/L or less extractable lead (based on a modified waste extraction test using deionized water as the extractant) and 1,411 mg/kg or less total lead. This material is a California hazardous waste that may be reused as permitted under the variance of the DTSC provided that the lead contaminated soil is placed a minimum of 5 feet above the maximum historic water table elevation and covered with at least 1 foot of non-hazardous soil.

Type Y-2: Material that contains ADL in average concentrations (using the 90 percent Upper Confidence Limit) that exceed either 1.5 mg/L extractable lead (based on a modified waste extraction test using deionized water as the extractant) or 1,411 mg/kg total lead but are less than 150 mg/L extractable lead (based on a modified waste extraction test using deionized water as the extractant) and less than 3,397 mg/kg of total lead. This material is a California hazardous waste that may be reused as permitted under the variance of DTSC provided that the lead contaminated soil is placed a minimum of 5 feet above the maximum historic water table elevation and protected from infiltration by a pavement structure which will be maintained by the Department.

Type Z-2: Material that contains ADL in average concentrations (using the 95 percent Upper Confidence Limit) greater than or equal to 1,000 mg/kg total lead, greater than or equal to 5.0 mg/L soluble lead (as tested using the California Waste Extraction Test), and the material is surplus; or material that contains ADL in average concentrations greater than 150 mg/L extractable lead (based on a modified waste extraction test using deionized water as the extractant) or greater than 3,397 mg/kg total lead. This material is a Department-generated California hazardous waste and must be transported to and disposed of at a California Class I disposal site.

Type Z-3: Material that contains ADL in average concentrations (using the 95 percent Upper Confidence Limit) greater than 5.0 mg/L soluble lead, (as tested using the Toxicity Characteristic Leaching Procedure). This material is a Department-generated federal hazardous waste and must be transported to and disposed of at a California Class I disposal site.

14-11.03A(3) Site Conditions

ADL concentration data and sample locations maps are included in the *Information Handout*.

Type Z-2 is shown on the plans and in the Soils Characterization Report and Soils Characterizations Report Addendum included in the Information Handout. Additionally the Soils Characterization Report identified five locations with hazardous waste characterization that exceed ESL thresholds; requiring special health and safety measures and site practices to mitigate the risk or exposure to lead or diesel. Refer to the Soils Characterization Report and Soils Characterizations Report Addendum provided in the Information Handout for details on the locations and the test results.

.

14-11.03A(4) Submittals

14-11.03A(4)(a) Health and Safety Plan

Refer to section 14-11.11 for the Health and Safety Plan requirements.

14-11.03A(4)(b) Excavation and Transportation Plan

Within 15 days after approval of the Contract, submit 3 copies of an excavation and transportation plan. Allow 15 days for review. If revisions are required, as determined by the Engineer, submit the revised plan within 7 days of receipt of the Engineer's comments. For the revision, allow 7 days for the review. Minor changes to or clarifications of the initial submittal may be made and attached as amendments to the excavation and transportation plan. In order to allow construction to proceed, the Engineer may conditionally approve the plan while minor revisions or amendments are being completed.

Prepare the written, project specific excavation and transportation plan establishing the procedures you will use to comply with requirements for excavating, stockpiling, transporting, and placing or disposing of material containing ADL. The plan must comply with the regulations of the DTSC and Cal/OSHA and the requirements of the variance. The sampling and analysis portions of the excavation and transportation plan must meet the requirements for the design and development of the sampling plan, statistical analysis, and reporting of test results contained in US EPA, SW 846, "Test Methods for Evaluating Solid Waste," Volume II: Field Manual Physical/Chemical, Chapter Nine, Section 9.1. The plan must include the following elements:

1. Excavation schedule by location and date
2. Temporary locations of stockpiled material
3. Dust control measures
4. Air monitoring. Include the following information:
   - 4.1. Location and type of equipment
   - 4.2. Sampling frequency
   - 4.3. Name and address of the accredited laboratory where the analysis was performed
5. Transportation equipment and routes
6. Method for preventing spills and tracking material onto public roads
7. Truck waiting and staging areas
8. Site for disposal of hazardous waste
9. Spill Contingency Plan for material containing ADL

14-11.03A(4)(c) Burial Location Report

Not Used

14-11.03A(5) Quality Control and Assurance

Excavation, reuse, and disposal of material with ADL must comply with rules and regulations of the following agencies:

1. US DOT
2. US EPA
3. California Environmental Protection Agency
4. CDPH
5. DTSC
6. Cal/OSHA
7. California Department of Resources Recycling and Recovery
8. RWQCB, Region 2, San Francisco Bay
9. California Air Resources Board
10. Bay Area Air Quality Management District

Transport and dispose of material containing hazardous levels of lead under federal and state laws and regulations and county and municipal ordinances and regulations. Laws and regulations that govern this work include:

1. Health & Safety Code, Division 20, Chp 6.5 (California Hazardous Waste Control Act)
2. 22 CA Code of Regs, Div. 4.5 (Environmental Health Standards for the Management of Hazardous Waste)
3. 8 CA Code of Regs

14-11.03B Materials

Not Used

14-11.03C Construction

14-11.03C(1) General

Not Used

14-11.03C(2) Material Management

Transport excavated Type Z-2 material using:

1. Hazardous waste manifest
2. Hazardous waste transporter with a current DTSC registration certificate and CA Highway Patrol (CHP) Biennial Inspection of Terminals (BIT) Program compliance documentation.

14-11.03C(3) Dust Control

Excavation, transportation, placement, and handling of material containing ADL must result in no visible dust migration. A water truck or tank must be on the job site at all times while clearing and grubbing or performing earthwork operations in work areas containing ADL. Apply water to prevent visible dust.

14-11.03C(4) Surveying Type Y-1 or Y-2 Material Burial Locations

Not Used

14-11.03C(5) Material Transportation

Before traveling on public roads, remove loose and extraneous material from surfaces outside the cargo areas of the transporting vehicles and cover the cargo with tarpaulins or other cover, as outlined in the approved excavation and transportation plan. You are responsible for costs due to spillage of material containing lead during transport.

14-11.03C(6) Disposal

The Engineer will obtain the State of California Board of Equalization identification no, for hazardous waste disposal. The Engineer will sign all hazardous waste manifests. Notify the Engineer 5 business days before the manifests are to be signed.

14-11.03D Payment

Type Z-2 excavation is measured as specified for roadway excavation in section 19-2.04 or structure excavation in section 19-3.04.

The Department does not pay for stockpiling of material containing ADL, unless the stockpiling is ordered. The Department does not pay for sampling and analysis unless it is ordered. The Department does not pay for additional sampling and analysis required by the receiving landfill.

Replace section 14-11.06 with:

14-11.06 DEPARTMENT-GENERATED CONTAMINATED SOIL

14-11.06A General

14-11.06A(1) Summary

Section 14-11.06 includes specifications for handling of petroleum-impacted soil. The petroleum-impacted soil is Department-generated contaminated soil.

14-11.06A(2) Definitions

Petroleum-impacted soil: Soil having concentrations of diesel and motor oil above published environmental screening levels established by the San Francisco Bay Regional Water Quality Control Board.

14-11.06A(3) Site Conditions

A site investigation report, dated May 19, 2016, containing the analytical test results for soil samples and the recommendation for handling the petroleum-impacted soil is included in the *Information Handout*. Petroleum-impacted soil exists as shown.

14-11.06A(4) Submittals

14-11.06A(4)(a) Health and Safety Plan

Submit a detailed health and safety plan (HSP), signed by a CIH, that identifies potential health and safety hazards associated with work involving petroleum-impacted soil and specifies work practices that will be used to protect workers from those hazards under 22 CA Code of Regs and 8 CA Code of Regs.

Refer to section 14-11.11 for the Health and Safety Plan requirements.

14-11.06A(4)(b) Safety Training Certification

Not Used

14-11.06B Payment

Payment for the excavation and disposal of the petroleum impacted soil will be made under either Roadway Excavation (Type Z-2) (Aerially Deposited Lead) or Structure Excavation (Type Z-2) (Aerially Deposited Lead).

Replace section 14-11.11 Reserved with:

14-11.11 HEALTH AND SAFETY PLAN

14-11.11A General

14-11.11A(1) Summary

Section 14-11.11 includes specifications related to health and safety of workers due to contaminated material on the job site.

Refer to the Soils Characterization Report in the Information Handout for locations where the sampling identified soils with levels of petroleum, lead or arsenic above the published environmental screening levels.

14-11.11A(2) Submittals

Submit a plan that identifies potential health and safety hazards associated with existing hazardous substances and specifies work practices to protect workers from those hazards. Comply with Cal/OSHA regulations. The plan must:

1. Identify key site safety personnel
2. Describe risks associated with the work
3. Describe training requirements
4. Describe appropriate personal protective equipment
5. Describe any site-specific medical surveillance requirements
6. Describe any periodic air monitoring requirements
7. Define appropriate site work zones
8. Describe any decontamination requirements

Submit the plan at least 15 days before starting work that may expose workers to hazardous substances for review and acceptance by the Engineer. Before submittal, you must have the plan approved by an industrial hygienist certified by the American Board of Industrial Hygiene.

14-11.11B Materials

Not Used

14-11.11C Construction

Before performing work that may expose workers to hazardous substances, complete a safety training program that communicates the potential health and safety hazards associated with work on the job site and instructs workers in procedures for performing the work safely. The level of training provided must be consistent with the personnel's job function.

Do not start safety training until the health and safety plan is accepted by the Engineer.

Provide subsequent refresher training required until completion of the project. Furnish a certification of completion of the safety training program to all personnel who successfully complete the training.

Provide personal protective equipment required by State personnel to inspect the work.

14-11.11D Payment

Not Used

46 GROUND ANCHORS AND SOIL NAILS

Add to section 46-3.01A:

Your attention is directed to the Log of Test Borings. Anticipate material consisting of fractured to highly fractured and weathered rock. Anticipate difficult drilling conditions and anticipate the utilization of drill casings for soil and rock stability during soil nail drilling and installation. Anticipate overbreakage of 100% during excavation due to the fractured nature of the material. Anticipate utilization of percussive excavation equipment during excavation.

Anticipate grout concentrations and difficult excavation and drilling behind existing tie back retaining wall between Station CC E 1021 and 1024+50 +/-. Anticipate these areas of high grout concentrations at soil nail rows R3 through R9 at walls zones 1-4 of Retaining Wall 4.

Due to the length of required soil nails, lane closures will be required for installation of some soil nails. Do not hoist soil nails or any other material/equipment over live traffic lanes.

Add to the 2nd paragraph of section 46-3.01D(2)(b)(iii):

In addition to the proof test soil nails shown, install and test 20 proof test soil nails at locations determined by the Engineer.

Add to section 46-3.04:

Full compensation for compliance with these provisions are covered under various items of work and no additional compensation will be allowed.

Add to section 51-1.01A:

The concrete gray color for structural aesthetics of all retaining walls with geese, birds and waves must be a uniform gray color that matches in gray color between each poured sections.

All patterns and textures must match exactly throughout each entire numbered retaining wall.

Add to Section 51-1.01D(3):

51-1.01D(3) Test Panels

Scale Models:

- Make three dimensional 1/4 scale models in foam or clay of test panels Geese “G11”, Bird “BL11” that fully show geese and birds articulated bodies, fractured rib and fin with wave patterns.
- Revise and resubmit scale models in accordance with Engineer’s comments. The Engineer shall have 10 working days to review and comment on scale models once both scale models are complete.

Test Panels:

- Full-size Bird “BL11”, approximately 6’ x 9’ (see plans) Full-size Geese “G11”, approximately 8’ x 15’ (see plans) 4’ x 4’ fractured rib texture and wave with smooth finish
- 4’ x 4’ fractured fin texture and wave with smooth finish
- 4’ x 4’ medium sandblast texture finish

Test panels must be:

1. Constructed at an authorized location
2. Sizes as noted above
3. Constructed and finished using the personnel, materials, equipment, and methods to be used in the work
4. Constructed vertically
5. Contain full size design elements described above
6. Have uniform even surfaces with required texture finish without worm holes, gaps, etc.
7. Accepted before starting work on mock-up panel. The Engineer shall have 10 working days to review and comment on test panels after completion of all test panels.

The Engineer may request that additional test panels be constructed until the specified finish, texture and detail are attained. Full compensation for additional test panels are paid under Bid item “architectural Treatment” and no additional compensation will be allowed.

The Engineer uses the authorized scale models and test panels to determine acceptability of the work.

Add to section 51-1.01D:

51-1.01D(7) Mock-up Panels

Construct mock-up panels for Geese "G1" & “G11” and Bird "BL1" & “BL11” as shown on the drawings. Mock up panels must be cast vertically and be curved to match the roadway horizontal curve at retaining wall 4. Panels must accurately show all required design elements at full size with required surface finishes.

Mock-up panels must be:

1. Constructed at an authorized location that is not within the job site
2. Geese "G1" and Bird "BL1" at least 12 feet wide by 12 feet high by 6 inches deep
3. Geese "G11" and Bird "BL11" at least 16 feet wide by 16 feet high by 6 inches deep
4. Constructed and finished using the personnel, materials, equipment, and methods to be used in the work
5. Constructed vertically and curved to match roadway horizontal curve at retaining wall 4
6. Constructed with no horizontal seams
7. Have uniform even surfaces with required texture finish without worm holes, gaps, etc.
8. Accessible for viewing
9. Displayed in an upright position near the work
10. Authorized before starting work. The Engineer will have 10 working days after the last Mock up panel to review and provide comment.

The Engineer may request that additional mock-up panels be constructed until the specified finish, texture and detail are attained. Full compensation for additional test panels are paid under Bid item “architectural Treatment” and no additional compensation will be allowed.

The Engineer uses the authorized mock-up panels to determine acceptability of the work.

Dispose of the mock-up panels after the concrete surface texture work is complete and authorized. Notify the Engineer before disposing of the panels.

Add to section 51-1.03G(1):

Formed relief textures must consist of geese, birds, waves and bands with smooth finish and fractured rib and fin textures and medium sandblast texture on field, as shown. Apply class 1 surface finish to raised geese, birds and waves and bands.

Add to the 5th paragraph of section 51-1.03G(1):

For the geese, birds, waves, fractured ribs and fins and medium sandblast test panels and a mock-up panels are required as indicated under test panels and mock-up panels.

Add to section 51-1.03G(2):

Forms with form liner patterns must be uniformly and smoothly curved to conform to retaining walls horizontal curves. Angular bends and horizontal joints in form liner patterns will not be accepted.

Add after the 12th paragraph in section 51-1.03G(2):

Do not abrasive blast the retaining walls surface textures. Pressure wash the textured surface with medium water pressure and using a fan pattern. Do not damage the texture or remove concrete surface on texture which will expose aggregate and worm holes below.

Add to section 51-1.04:

Measurement for Architectural Treatment includes all patterns and textures including geese, birds, waves, fractured rib, fractured fin and bands at the ends and top of the architectural treatment.

The Contract price paid per square foot for Architectural Treatment includes full compensation for furnishing all labor, materials, tools, equipment, and incidentals, and for doing all the work involved in architectural treatment, complete in place, including forming and constructing test panels and mock-up panels, as shown on the Contract Drawings and as specified in these Specifications, and as directed by the Engineer.

77 LOCAL INFRASTRUCTURE

77-1 WATERLINE RELOCATION (MARIN MUNICIPAL WATER DISTRICT)

77-1.01 GENERAL

77-1.01A Summary

Section 77-1 includes specifications for relocating the Marin Municipal Water District waterline.

The relocation shown on the plans is a preliminary layout. The final layout and profile of the waterline is to be finalized by the Contractor and submitted for approval prior to construction.

The Marin Municipal Water District (MMWD) will furnish some of the materials. The contractor is to provide all materials needed for the relocation except those materials that have been specifically identified as provided by MMWD on the plans or in the specifications.

77-1.01B Abbreviations

MMWD: The Marin Municipal Water District, acting directly or through properly authorized agents, limited by the particular duties entrusted to them.

NACE: National Association of Corrosion Engineers

NSF: National Science Foundation

77-1.01C Submittals

Prior to the start of field work, submit for approval or acceptance:

1. Layout plan and profile drawings for the waterline relocation. The drawings must include the information on the potholes performed to locate existing utilities and conflicts in accordance with section 8-1.03 and the potholes for field verifying the waterline tie-ins.
2. Detailed CPM schedule with the proposed dates of beginning and completion of the work, interim points and system shutdowns. If the actual progress of the work varies materially from the proposed schedule or if the Contractor proposes to change it for any reason, he must submit the revised construction schedule to the Engineer for review and approval.
3. Submit prior to excavation of any trench five (5) feet or more in depth, a detailed plan showing the design of shoring, bracing, or other provisions to be made for work protection from the hazard of caving ground. If the plan varies from the standard shoring systems indicated in the State Division of Industrial Safety, CAL/OSHA Construction Safety Orders, the plan must be prepared by a registered civil or structural engineer.
4. Welder's certification in accordance with Section 4.4 of the AWWA specification.

Unless otherwise noted herein, submittals will be returned within 30 days.

77-1.01D Quality Control and Assurance

77-1.01D(1) General

All work and material (including the manufacture and preparation of such material) from the beginning of the construction until final completion and acceptance of the proposed work, shall be subject to the inspection and approval of the Engineer.

Unless otherwise authorized, all work shall be performed only in the presence of the Engineer. Any work done without proper inspection will be subject to rejection. The Engineer shall at all times have access to the work during its construction or fabrication at shops and yards as well as the project site. The Contractor shall provide every reasonable facility for ascertaining that all material and

workmanship conform to the contract documents.

Any work or material found to be in any way unsatisfactory or defective before the acceptance of the proposed work shall be corrected or replaced immediately by the Contractor at his own expense, regardless of the fact that it may have been previously overlooked or passed by the Engineer. Inspection of the work shall not relieve the Contractor of the obligation to fulfill all conditions of the contract.

Whenever required by the Engineer, the Contractor shall furnish all labor, material, tools and equipment necessary to make an examination of any work under the contract that may be completed or in progress, even to the extent of uncovering or taking down portions of the previously inspected, finished work. Where such uncovering or taking down is necessitated by the Contractor's violation of law or breach of contract, or where such work is found unsatisfactory, the cost of making such examination and of reconstruction shall be borne by the Contractor. If work is found to be satisfactory, the examination and reconstruction costs will be borne by the MMWD in the manner prescribed for payment for extra work.

77-1.01D(2) Samples and Tests of Material and Work

Upon request of the Engineer, the Contractor, at his own expense, shall prepare and furnish samples and test specimens of any material not obtained by the MMWD and identify the source of such material.

All samples shall be submitted with ample lead time to enable the Engineer to make any tests, analyses or examinations the Engineer deems necessary prior to incorporation of such material into the work.

All tests of the completed work required by the specifications shall be made by the Contractor under the direction of the Engineer. In addition to bearing the costs of testing, the Contractor, at his own expense, shall repair all damages to the work resulting from test failure.

In order that the MMWD may determine the Contractor's compliance with contract requirements that are not readily enforceable through inspection or tests of the work and material, the Contractor shall, upon request, submit to the Engineer properly authenticated documents or other satisfactory proofs of compliance with such requirements.

77-1.01E Scheduling of the Work and Shutdowns

Minimum fourteen (14) calendar days prior to the start of any field work, the Contractor shall provide to the Engineer a schedule for intended progress on this project. The schedule shall include a firm starting date for the work, intermittent progress points and the time and duration for any system shutdowns. The Contractor shall not start any work until the Contractor has received approval of the submitted schedule. This schedule shall be updated as the work progresses

The schedule shall be adequate, in the opinion of the MMWD, to meet the requirements for completion of the work as herein set forth. If, in the opinion of the MMWD, the Contractor's proposed schedule or the actual progress of the work is insufficient to meet the specified requirements, the Contractor shall take such steps as are necessary to accomplish the required progress and completion. When in the judgment of the MMWD, it is necessary to accelerate any part of the work ahead of schedule, the Contractor shall, when directed, concentrate his efforts on such part of the work.

Shutdowns of the water distribution system for connection shall be for periods of less than one work day. The contractor shall set his work force accordingly. All system service must be restored by the end of that given work day.

77-1.01F Illumination of Work

When any work is performed at night, in a tunnel or in a place where there is little or no daylight, the

Contractor shall provide artificial light sufficient to prosecute the work properly and safely and to permit thorough inspection.

77-1.01G MMWD Furnished Materials

Prior to commencement of work under the contract, material to be furnished by the MMWD will be issued only upon written request by the Contractor if submitted to and countersigned by the Engineer at least 4 working days prior to furnishing of such material. No material will be issued until the Notice to Proceed is issued by the MMWD. After work has commenced the Contractor shall give the MMWD at least a 24-hour notice prior to drawing of material. Receipts for material which are signed by the bearer of the request shall be conclusive evidence of the delivery of the specified material to the Contractor. It is the Contractor's responsibility to verify that the material obtained from the MMWD is of proper quantity to complete the intended portion of work prior to starting that portion of work. All excess material shall be returned undamaged to the point from which they were obtained within 5 working days after written request by the Engineer. All damaged material will be charged to the Contractor.

The Contractor's responsibility for material furnished by the MMWD shall begin at the point of delivery to the Contractor. Material already on the site shall become the Contractor's responsibility at the time the Notice to Proceed is issued for the contract. The Contractor shall examine all material furnished by the MMWD at the time and place of delivery to him and shall reject all defective material. Any material furnished by the MMWD and installed by the Contractor without discovery of such defects will, if found defective prior to final acceptance, be replaced with sound material by the MMWD. However, the Contractor, at his own expense, shall furnish all labor and equipment necessary to remove said defective material and install the sound material in a manner satisfactory to the Engineer.

The Contractor shall provide all labor, tools, material (i.e. dunnage, tie downs, etc.) and equipment necessary for loading, hauling and unloading material from the storage points to the job sites. By signing the requisition paperwork, the Contractor verifies that the material received from the MMWD is of satisfactory quality for installation. The Contractor shall be responsible for proper and careful handling of all material from the time it is obtained until it is properly and completely installed and accepted by the MMWD. Any damage to material the handling of the material shall be the Contractor's responsibility and he will bear all costs of repairing or replacing such material.

77-1.01H Use of Improvements during Construction

The MMWD reserves the right to take over and utilize all or part of any completed facility or appurtenance. When possible, the Contractor will be notified in advance of such action. Such action by the MMWD will relieve the Contractor of responsibility for injury or damage to said completed portions of the improvement resulting from use or from the action of the elements or from any other cause, except injury or damage resulting from the Contractor's operations or negligence. The use by the MMWD of the work or part thereof as contemplated in this section shall in no case be construed as constituting acceptance of the work or any part thereof. Nothing in this section shall be construed as relieving the Contractor from full responsibility for correcting defective work or materials.

77-1.01I Acceptance of Work

When the Contractor is satisfied that all work is complete and ready for use, he shall notify the Engineer in writing to that effect. Upon receipt of such notice, the Engineer will make a verification inspection. If the work is found to be satisfactory, the Contractor will be notified in writing of acceptance of the waterline relocation work.

77-1.02 MATERIALS

77-1.02A General

Materials are to be supplied by the Contractor unless otherwise identified in the specifications or on drawings as material furnished by the MMWD.

77-1.02B MMWD Furnished Materials

All MMWD furnished materials are stored at either the MMWD's warehouse, located at 220 Tamal Vista Boulevard in Corte Madera, or the MMWD's pipe yard, located on Pelican Way in San Rafael. The pipe yard is only open on Monday, Wednesday and Friday from 8 am to 11 am.

The MMWD will furnish the materials listed below:

1. Distribution System Piping and Fittings
   - 1.1 Piping is stocked and issued in 20 foot lengths with bell & spigot joints
   - 1.2 Welded steel pipe is mortar lined and tape or extrusion coated
   - 1.3 Weld Ells (Elbows) are stocked and issued in 45 and 90 degree sections
2. Copper Service Piping and Fittings
3. Gate Valves
4. Ball Valve
5. Field Applied Tape Coating System
   - 2.1 Multipolymer 30 mil Tape System
6. Cathodic Protection:
   - 3.1 Type TW No. 8 wire
   - 3.2 Magnesium anodes
   - 3.3 Type "C" test stations
   - 3.4 Utility box

77-1.02C Earthwork

77-1.02C(1) Class 2 Aggregate Base

Material shall conform to section 26 for the ¾" maximum size Class 2 aggregate base. Aggregate grading and quality requirements shall conform to the moving average criteria unless otherwise specified by the Engineer, and shall apply to material both before and after compaction.

77-1.02C(2) Select Sand

Material shall be a clean material free of organic or other deleterious substances and of such gradation that a minimum of 90% will pass a No. 4 sieve and not more than 5% will pass a No. 200 sieve. If low chloride sand is required, the chloride content shall not exceed 30 parts per million by weight.

77-1.02C(3) Native Backfill

Where use of native soil is directed, prepare native soil as necessary to be free from clods or rocks larger than 3 inches in greatest dimension, and free from organic material and as approved by the Engineer.

77-1.02C(4) Drain Rock or Gravel

If drain rock or gravel is required, river run or crushed rock with a maximum dimension of ¾ inch, with no more than 10 percent passing the No. 200 sieve, and with a durability index of 40 or higher shall be used.

77-1.02D Redwood Blocking

The Contractor shall provide all redwood blocking necessary on the project for the fabrication of concrete thrust blocks and for setting valves and meter boxes and other applications as required.

77-1.02E Minor Concrete

Cement shall conform to ASTM C150, Type II. The maximum percent alkalies shall not exceed 0.6%.

Aggregates shall comply with ASTM C33 and shall be free from any substances that will react with the cement alkalies.

Water to be used in concrete shall be clean and free from objectionable quantities of organic matter, alkali, salts, and other impurities which might reduce the strength, durability, or otherwise adversely affect the quality of the concrete.

Concrete Mix Design:

1. The design shall conform to ASTM C94, except as modified by these specifications.
2. Fly ash shall not be used in the mix.
3. The maximum water-cement ratio for Class A concrete shall be 0.44 by weight or less.
4. The classes of concrete used shall be as described in the following table:

Class	Type of Work	28-Day Compressive Strength (psi)	Minimum Cement Content (lbs per cy)
A	Concrete for anchors and miscellaneous	3,000	472

The slump shall be measured in accordance with ASTM C143. The slump shall be 3 to 6-inches.

Concrete of lower than usual slump may be used provided it is properly placed and consolidated and only with prior approval by the Engineer.

Aggregate size shall be 3/4-inch maximum.

The combined aggregate grading shall be as shown in the following table:

Maximum Aggregate Size	
Sieve Sizes	Percent passing
2”	-----
1-1/2”	-----
1”	100
3/4”	90 - 100
3/8”	60 - 80
No. 4	40 - 60
No. 8	30 - 45
No. 16	20 - 35
No. 30	13 - 23
No. 50	5 - 15
No. 100	0 - 5
No. 200	0 - 2

77-1.02F Minor Hot Mix Asphalt
Comply with section 39.

77-1.03 CONSTRUCTION

77-1.03A General

The Contractor shall protect all pipes, facilities and roads near the work. Any damage to facilities by the Contractor shall be repaired to an equal or better condition than what exists at the time of damage.

Do not pave over pipe lines or appurtenances until authorized.

77-1.03B Pavement Removal

77-1.03B(1) General

Excavation for the pipe installation shall be open cut and shall include the removal of all paving, concrete, soils, abandoned utilities, water, or other objects of any nature that would interfere with the performance of the work.

77-1.03B(2) Sawcutting

In locations where the pipe is to be installed by open cut method under asphaltic concrete or concrete pavement sections, the outline of all pavement areas to be removed shall be cut prior to removal as required by the local jurisdiction in which the work is being performed. Any cutting that requires water shall be done with a vacuum system that collects all the water and does not allow any water or cutting products to flow into the storm drain. Cuts shall be neat and true, shall be cut completely through the existing pavement section to subgrade and shall be done without damaging adjacent pavement that is not to be removed. No jack-hammer, “drop hammer,” or similar equipment will be allowed to cut the pavement. Grinding that results in cuts wider than 0.5 inch shall not be considered as sawcuts. The Contractor shall anticipate that variations in the thickness of paving exist.

77-1.03B(3) Disposal

Pavement removed from the pipeline trench shall be hauled from the job and disposed at a County approved disposal site.

77-1.03C Trench Excavation

77-1.03C(1) General

Trench excavation for pipelines shall be open cut, except that service piping may be installed using either open cut or trenchless methods defined later in this section.

The trench shall be excavated to the lines and grades shown on the drawings and in accordance with trench details. If the trench is excavated below the required grade, the Contractor shall refill the trench excavated below the grade with compacted Class II Aggregate Base at no additional cost to the MMWD.

The Contractor shall perform all excavation regardless of the type, nature, or condition of the material encountered to accomplish the construction. No blasting shall be permitted.

77-1.03C(2) Alignment

The Contractor shall conform, as nearly as possible, to the pipeline alignment indicated on the plans unless modified by the Engineer. Whenever vertical or horizontal deflection of the pipe is required to avoid obstructions or where long radius curves are permitted, the degree of deflection at joints shall be approved by the Engineer.

77-1.03C(3) Excavation at Bell Holes

When bell holes are required they shall be excavated at each point where pipe ends are to be joined. Bell holes shall be adequately sized to permit ease in making the joint. When necessary, bell holes shall be shored and protected in conformance with CAL/OSHA requirements.

77-1.03C(4) Shoring

The Contractor shall at all times comply with Safety Regulations set forth in the State of California, Construction Safety Orders and Trench Construction Safety Orders, issued by CAL/OSHA's Division of Industrial Safety. No excavation shall start until the Engineer has received 1) a copy of the Contractor's permit for the project from the State Division of Industrial Safety and 2) a copy of all project notification forms and/or letters that he has forwarded to the CAL/OSHA District office.

Shoring shall follow an accepted shoring plan submitted by the Contractor. In order to prevent cave-ins and protect adjacent areas, excavation in unstable material shall be adequately shored and braced. Shoring shall remain in place until the pipeline has been installed, inspected and the earth compacted around and over the top of the pipe. Upon completion of the work the Contractor shall remove all shoring unless otherwise specified by the Engineer.

77-1.03C(5) Rock Excavation

Wherever the word "Rock" appears in these Specifications, it shall be interpreted to mean any of the following: (1) material in ledges, bedding deposits of unstratified masses which cannot be removed without the use of hydraulic or pneumatic hammers or continuous drilling and blasting, (2) boulders larger than one cubic yard which, when first exposed, cannot be broken down from their original state with a modern ¾ cubic yard backhoe power excavator or a Caterpillar D8 with a single tooth ripper, in good condition, and cannot be safely transported in a vehicle for disposal, (3) concrete, asphalt or masonry structures which have been abandoned and cannot be broken down from their original state with a modern ¾ cubic yard backhoe power excavator and (4) conglomerate deposits which are so firmly cemented that they possess the characteristics of solid rock and cannot be removed without systematic drilling.

77-1.03C(6) Trenchless Installation of Pipelines

Trenchless installation of pipelines shall be defined as installation of pipe using a technique that does not require open cut excavation along the length of the pipe installed. Examples of typical equipment include a pneumatic "mole," directional bore, or cable-drawn splitting head equipment. Specific techniques may be required in certain areas as indicated on the Drawings.

77-1.03D Dewatering and Drainage

The Contractor shall provide all equipment and labor adequate to keep all trenches and excavations free of water. The Contractor shall keep excavated areas free of standing or flowing water during pipe installation, concrete placement, and backfilling operations by draining or pumping from a point that is outside the structural limits of work and below that of the excavation. The Contractor shall also provide a positive means to assure that no water will enter previously installed pipe. The Contractor is responsible for obtaining and complying with any discharge permits required by any appropriate regulatory authority and shall not direct drainage effluent in such a manner that damage to adjacent property or natural watercourses occurs.

77-1.03E Refilling Trenches

77-1.03E(1) General

The Contractor shall place backfill material around structures and in other areas, including overexcavation areas, as shown on the plans and as specified by the Engineer. Backfill shall be placed immediately subsequent to installation of the pipeline and appurtenances, and shall be installed in loose lifts not exceeding eight inches in depth. Compaction requirements shall be 95% relative compaction for Class II Aggregate Base Rock and 90% for native backfill to a depth of 18 inches

below the bottom of the required paving and 90% relative compaction below that level. Material shall be moistened as required to aid compaction. No foreign materials (blocking) shall be left in the trench.

77-1.03E(2) Geotechnical Testing by MMWD

Soils compaction tests will be taken on a random basis, approximately one test per 100 feet (location determined by the Engineer). Where testing is done, one test shall be taken on the lower lift and one on the upper lift of the base rock.

Testing shall be accomplished in accordance with ASTM D2922 or California Test Method No. 216.

The MMWD will bear costs of testing except that of a failed retest. The cost of $100 per each retest shall be deducted from any payment due to the Contractor.

77-1.03E(3) Temporary Pavement

Temporary pavement as shown on drawing SCD-4 shall be placed daily over the work accomplished that day. Temporary pavement shall be maintained daily.

77-1.03E(4) Steel Plates

Steel traffic plates shall not be used without the expressed written approval of the Engineer and the local jurisdiction in control of street openings and encroachments. It is the Contractor's responsibility to contact and secure permission for steel plate use prior to construction within each specific jurisdiction. Steel traffic plates, where approved, shall have a non-skid surface. The determination for use shall be made by the Engineer and shall be final.

77-1.03F Compaction Equipment, Methods, and Requirements

77-1.03F(1) General

Care shall be exercised in any method of backfilling to avoid damage to the protective coating or mortar lining of the pipe. It is important that proper precautions be taken to prevent floating of the pipe. The Contractor shall be wholly responsible for any damage resulting from failure to take necessary precautions when placing and compacting backfill. Compaction equipment or methods that produce horizontal or vertical earth pressures, which may cause excessive displacement or which may damage nearby structures, shall not be used. Use of a hydraulic hammer for compaction will not be allowed.

Backfilling shall conform to the requirements of the applicable local jurisdiction or those included in these specifications, whichever is more stringent. In the case of conflict between the requirements, the Engineer shall determine which shall prevail.

77-1.03F(2) Paved Areas

Backfill materials shall be moistened to near optimum moisture content and shall be placed in the trench on both sides of the pipe for the full width of the trench. Sand shall be brought up evenly on both sides of the pipe. Said materials shall be placed into the trench by hand or by approved mechanical methods, and be compacted to provide solid backing against the external surface of the pipe. The Contractor shall not place or compact backfill above springline until the Engineer has inspected and approved the lower portion of backfill. Flooding of this lower portion of backfill will not be permitted.

The remaining backfill shall be placed in uniform horizontal layers not to exceed eight inches in loose thickness before compaction. Each layer shall be dampened sufficiently and uniformly tamped, rolled with a vibratory compactor or otherwise compacted throughout until the relative compaction is satisfactory. Non-uniform compacted surfaces may be rejected. Inundation of this upper portion of backfill will not be permitted. The material between the bottom of pavement and a plane 18 inches below that, shall be worked until a minimum relative compaction of 95% throughout is reached. Material below that plane shall be compacted to a minimum of 90% relative compaction throughout.

Backfill within 10 feet of any mainline valve shall be placed and compacted in 6-inch lift thicknesses. Backfill shall be compacted to within one inch of finished grade prior to placement of temporary pavement. The Contractor shall compact temporary pavement as required in Section 02500 daily on all surfaces where paving has been removed.

Impact compaction machines, such as a “Hydra Hammer”, and backhoe mounted compaction machines, such as a HedShaker, shall not be used. The Contractor shall compact all backfill to the specified relative compaction as it is being installed. Wheel-rolling will not be allowed.

All excavations shall be restored to the elevation of surrounding pavement prior to completion of each day’s work. If any sections of restored trench settles below the surrounding pavement, the Contractor shall re-work the trench to the same elevation as the surrounding pavement each day.

Any backfill material which cannot be compacted to the specified degree will be rejected. Any backfill material which pumps or is not firm will be rejected even if compaction requirements are satisfied.

The Contractor, at his expense, shall remove the rejected material and replace it with suitable material.

Particular care shall be taken in the backfilling and compaction of the area around the taps to the main. Hand tamping will be required rather than equipment tamping or rolling.

77-1.03G Pipe Installation

All of the pipe shall be thoroughly cleaned of all dirt, rock and other debris that may be found in the interior of the pipe. If considered necessary by the Engineer, he may direct the Contractor to swab the pipe to clean it. Prior to placement of the pipe, the Contractor shall repair any damage to the exterior coating.

Nothing herein shall preclude the method of assembling and welding the pipe in suitable sections above ground to reduce the number of below ground joints. If this method is adopted, the Contractor shall temporarily support the line on adequately sized and spaced timbers across the trench. The timbers shall have a minimum of one foot of bearing length on each side of the trench. Each support shall be padded to prevent any damage to the exterior coating of the pipe. When lifting and lowering multiple-pipe sections, the Contractor shall utilize the number of support locations and pieces of lifting equipment required by the Engineer.

Each joint of steel or steel cylinder pipe shall be lifted by means of belt-type slings approved by the Engineer. The slings are to provide support in order to prevent damage to the coating or undue, injurious deflection of the pipe while lowering it into the trench. When lifting and lowering other pipe types, the Contractor may utilize other means approved by the Engineer. In no case shall wire rope or chain be used for such purposes.

When lowering single lengths of pipe into the trench, each shall be lifted and held in two properly spaced locations and lowered in such manner as to prevent undue deflection. Such procedures shall be approved by the Engineer prior to assembly and installation.

The pipe shall be bedded and installed evenly so that the pipe barrel will be in full bearing for its entire length. After the trench has been excavated and prepared in accordance with these specifications, the pipe shall be carefully lowered into place and adjusted accurately to the required line and grade. Any blocking used to support the pipe during laying shall be removed after sufficient backfill has been placed to hold the pipe on the required line and grade and before laying the next section. Each pipe shall have a firm bearing for its full length in the trench.

Pipe shall be installed upgrade (low elevation to high elevation) and the socket or collar ends of the pipe shall be installed on the upgrade side unless otherwise authorized by the Engineer.

Change in the pipeline grade, slope or horizontal direction, which are in excess of that allowed within the

pipe joint, shall be constructed from the fittings furnished. Weld ells shall be trimmed by the contractor to the angle necessary to accomplish the required change.

77-1.03H Separation and Clearance

A minimum vertical clearance of six (6) inches shall be maintained between a water facility and any obstructions.

A minimum vertical clearance of twelve (12) inches shall be maintained between high pressure or transmission gas, electrical/ communication ducts and conduits.

The minimum vertical clearance and horizontal separation between water and sewer, recycled or storm drain facilities shall be in accordance with standards established by the State Department of Health Services and Title 22, Section 64572 of the California Administrative Code. The design guidelines of the Engineer are the following:

The horizontal separation between water and sewer mains shall attempt to maintain a distance of not less than ten (10) feet.

The horizontal separation between water mains and storm drain, recycled or raw water piping shall attempt to maintain a distance of not less than four (4) feet.

Where the water main must cross a sewer, storm drain, recycled water or raw water pipe, the crossing shall be made as close to a 45 degree angle as possible and the bottom of the water facility shall be as close to 12- inches above the top of the sewer pipe as possible. When the water main installation crosses any sewer, a minimum of eight (8) feet shall be maintained between the sewer and any pipe joint on the new water pipeline.

If these conditions cannot be met, variations will be allowed as determined by the Engineer.

77-1.03I Pipe Jointing

The type of joint to be used normally will be indicated on the plans or in the specifications for this contract. If not designated, the type of joint may be any of those listed in the paragraphs below. The Contractor shall use care in making all joints, and shall strictly follow appropriate installation procedures as indicated by the manufacturer or as directed by the Engineer. In general, installation requirements for several, but not all joint types are as follows:

1. Welded Joints

    1.1 For bell and spigot joints, the spigot must stab at least one half of the bell depth. MMWD standard piping has a 2-inch bell. This “pull” dimension limits the deflection allowable in a welded joint.

    1.2 All welding shall be done in accordance with American Welding Society Standards and “Field Welding of Steel Water Pipe”, A.W.W.A. C206.

    1.3 All welds shall be made with the electric arc process. All welding rods shall be furnished by the Contractor and shall be Lincoln Fleetwood 5P or equivalent as determined by the Engineer. All welding machines shall be equipped with a voltmeter and ammeter in good working condition. Continuous feed wire welding shall not be allowed for any field welding.

    1.4 Tack welds shall have 100% penetration, and in the event that any tacks break, they shall be completely chipped out before circumferential welding is started.

    1.5 Welds shall be made in two or more passes. The number of filler and finish beads shall be such that the completed weld shall have a substantially uniform cross section around the entire circumference of the pipe. The entire root bead shall be made with the pipe in a stationary position and successive beads shall not be started at the same location. The crown of the

finished weld shall not be raised above the parent metal by more than 1/16 of an inch. A maximum undercut of 1/32 of an inch may be permitted. Weld penetration shall be 100% and the thickness of weld shall be equal to or greater than the wall thickness of the pipe. Each bead shall be completely cleaned of all slag and extraneous materials with a pointed chipping hammer and a stiff wire brush after each pass. Welding shall not be performed when surfaces are wet or during periods of high winds unless the operator and work are properly protected.

1.6 Slag inclusion is permissible where it occurs between layers of the weld and is equal to not more than one-half the width of the weld metal measured in a direction parallel to the face of the weld and when its greatest dimension measured in a direction perpendicular to the face of the weld does not exceed 10% of the throat.

1.7 Gas pockets are permissible that do not exceed 1/16 of an inch in the greatest dimension and when there are no more than six gas pockets of this maximum size per square inch of the weld metal or where the combined areas of a greater number of pockets do not exceed 0.02 square inch per square inch (2% of weld metal).

1.8 Joints between plain ends shall be made using butt straps as specified by the Engineer. Butt welding between plain ends of pipe shall not be allowed.

1.9 The MMWD may require weld radiographs of joints where necessary. Such radiographs will be interpreted by persons who are qualified through training and experience to perform this service. Should any welds not conform in quality to the minimum requirements, they shall be replaced by the Contractor at no cost to the MMWD, and the Contractor will be charged the costs of obtaining and evaluating the radiographs. No charge will be made to the Contractor for radiographs of satisfactory welds.

2. The slip-on type joint installation applies for several different types of pipe including ductile iron, cast iron (Tyton), polyvinylchloride (PVC), and asbestos cement (AC) pipe. In all cases, the Contractor shall follow the manufacturer's installation procedures. In general, the procedure for slip-on joints will be as follows:

2.1 All foreign matter shall be removed from the gasket, groove, and bell (or coupling). In addition, the spigot of the entering pipe must be clean for a minimum of 8-inches from the stab end.

2.2 The gasket shall be installed so that it is evenly seated in the groove within the bell (or coupling) and in accordance with the manufacturer's recommendations.

2.3 Approved lubricant shall be applied to the installed gasket, the bell (or coupling) interior, and the pipe spigot (from the taper end to a point outside the full insertion length). Lubricant shall not be applied to the groove. Any lubricants which are used to facilitate jointing shall conform to the American Water Works Association and National Science Foundation standards for use in potable water systems

2.4 With the pipe sections in alignment and the pipe ends in contact, sufficient force shall be applied to the entering pipe so that the spigot is pushed through the gasket and against the back of the bell (or coupling). If an insertion mark is provided, it should be flush with the end of the coupling (or bell) upon completion of the joint.

2.5 If field cuts are required, all cuts will be squared to the Engineer's satisfaction and the spigot end beveled in accordance to the manufacturer's recommendations.

2.6 Maximum deflection at or between joints of full sticks (20 feet) of pipe shall be as allowed by the Engineer or manufacturer's specifications. For example, ductile iron pipe joint deflections may vary from five degrees for 4-inch pipe to three degrees for 12-inch pipe. However, the maximum deflection joint to joint shall be 1.0 foot. PVC is known to fail at service taps at the manufacturer's maximum allowable deflection.

3. The mechanical type joint installation applies for several different types of pipe including ductile iron, cast iron (Tyton), polyvinylchloride (PVC), and asbestos cement (AC) pipe. In all cases, the Contractor shall follow the manufacturer's installation procedures. In general, the procedure for mechanical joints will be as follows:

   3.1 All foreign material other than the standard coating shall be removed from the outside of the spigot and the inside of the bell in the area within 8 inches of the joint end. The follower gland shall then be slipped on the spigot end of the pipe with the lip extension of the gland toward the socket or bell end. The rubber gasket shall be placed on the spigot end with the thick edge toward the gland.

   3.2 The entire section of the pipe shall be pushed forward to seat the spigot end into the bell. The gasket shall then be pressed into place within the bell, being careful to insure that the gasket is evenly seated around the entire joint. Then the follower gland shall be moved along the pipe into position for bolting. After bolt insertion and hand tightening, all nuts shall be tightened with a suitable (preferably torque-limiting) wrench. The torque for various sizes of bolts shall be as follows:

Range of Torque

Bolt Size (Inches)	(Ft.-lbs)
5/8	40 - 60
3/4	60 - 90
1	70 - 100
1-1/4	90 - 120

   Care shall be taken in final tightening of nuts in order to produce an equal pressure on all parts of the gland.

   3.3 Maximum joint deflections shall be those allowed by the Engineer or manufacturer's specifications. For example, deflections may vary from five degrees for 4-inch pipe to three degrees for 12-inch pipe.

4. The threaded type joint installation applies for several different types of pipe including galvanized threaded pipe and brass pipe. In all cases, the Contractor shall follow the manufacturer's installation procedures. In general, the procedure for threaded joints will be as follows:

   4.1 All foreign material other than the standard coating shall be removed from the outside and the inside within 8 inches of the joint end. The pipe .shall be jointed at threaded ends with a threaded coupling.

   4.2 Where the pipe is cut and no threaded end exists, the contractor shall clean, prepare and thread the end of pipe to make the connection with the threaded coupling.

5. Installation of HDPE Fireline Spools:

   5.1 Install flat washers between the nuts and the back up ring.

   5.2 The back up ring shall be moved along the pipe into position for bolting. After bolt insertion and hand tightening, all nuts shall be tightened with a suitable (preferably torque-limiting) wrench. The torque for various sizes of bolts shall be as follows:

Range of Torque

Bolt Size (Inches)	(Ft.-lbs)
5/8	60
3/4	100

5.3 Bolts shall be tightened in a cross pattern, first top, then bottom, then right, etc. Care shall be taken in final tightening of nuts in order to produce an equal pressure on all parts of the back up ring.

5.4 One hour after originally tightened to proper torque, all bolts shall be checked for proper torque value. Tighten all bolts to proper torque value.

5.5 The spool shall be backfilled with well consolidated sand and Class 2 road base to provide support to the spool piece.

6. Installation of Flexible Couplings, Flanged Coupling Adapters and Joint Harnesses:

6.1 Prior to installation, thoroughly clean oil, scale, rust, and dirt from the pipe to provide a clean seat for the gasket. Take care that the gaskets are wiped clean before they are installed. If necessary, gaskets may be lubricated with soapy water before installation on the pipe ends.

6.2 Connections to be made by the use of flexible couplings, or flanged coupling adapters shall have the follower ring, gasket and coupling barrel (middle ring) placed over the end of the pipe section already in place (in the trench, etc.). The other follower ring and gasket shall be placed on the next pipe to be joined. The pipe shall then be lowered as close as possible to the coupling barrel and shoved into position until there is approximately one-half inch space between the pipe ends and the coupling is centered over the space.

6.3 Tighten bolts progressively, drawing up bolt on opposite sides a little at a time until all bolts have a uniform tightness. Workmen tightening bolts shall be equipped with torque-limiting wrenches or other favorably reviewed type.

7. Provide joint harnesses (tie rod lug or attachment plate assemblies) across all flexible couplings and flanged coupling adapters, except where specifically indicated otherwise on the Drawings. Harnesses welded to pipe sections shall be done prior to applying protective coatings. For flanged coupling adapters, anchor studs may be substituted for the harnesses on pipe up to 12-inch. Design restraint for 1 ½ times the test pressure of the applicable service or 225 psi, whichever is greater. As a minimum, conform to Tie Rod Table in AWWA.

77-1.03J Coating and Lining

77-1.03J(1) General

As with all construction, the Contractor shall strictly conform to all safety regulations issued by CAL/OSHA's Division of Industrial Safety and take all precautions indicated by the material manufacturers whose products are used on the job. In particular, whenever his men or the inspector(s) are inside the pipe, the Contractor shall use caution and shall do the following:

1. Provide adequate ventilation, lighting and communication.
2. Prevent waterflow in the pipe.
3. Insure that all valves are in the open position and are not operated until the pipe is vacated.
4. Remove all extraneous material that may cause future damage or contamination to the pipe interior.

77-1.03J(2) Coating

All metallic surfaces on pipe, fittings, services or appurtenances (including existing pipes that are

uncovered under this contract) which will be buried and which do not have a protective coating shall be cleaned and wrapped with tape.

The Contractor shall follow the manufacturer's recommendations when coating the exterior joints of concrete cylinder pipe or other similar pipe.
Prior to application of any specified tape, all bare metal and adjacent sound coating shall be thoroughly dried and cleaned by wire brushing, solvent cleaning, sandblasting, or other means as will be determined by the Engineer, to insure adequate bond of the field applied coating. Primer shall be applied by brush to all bare metal and adjacent surfaces and allowed to set according to the manufacturer's instructions.

All service tubing shall be cleaned to bright metal, free of contamination and moisture. The service pipe will be primed and PVC tape shall be spirally applied using two-inch wide tape with a minimum of one-half inch overlap. Sufficient tension shall be used so that there are no wrinkles. The tape will be a 10-mil PVC tape carrying UPC approval.

Steel pipe surfaces including pipe joints, damaged shop applied pipe coating, hydrant buries, valves and other fittings with less than 20 mils thickness shall be cleaned of all dirt, moisture, oil or other contamination and primed and tape wrapped. The pipe shall be circumferentially wrapped with enough tension to stretch the tape. The tape shall be overlapped at least 25%. No wrinkles or other voids will be permitted.

All exposed metal piping shall be primed and coated with the same system as adjacent pipe. Application shall be the same as for steel pipe. Surface preparation and application of prime and tape coatings shall be done by workers trained in this procedure. Demonstration of this training may be required. All field-applied coating shall be inspected and tested before backfilling.

77-1.03J(3) Lining

Small Diameter Pipe: For pipe having an inside diameter of less than 22 inches, a dry mixed cement mortar with sufficient moisture for workability shall be placed as a fillet at the face of the cement lining and around the entire circumference of the bell prior to inserting the spigot into the bell. Immediately thereafter, an inflated ball of a diameter slightly larger than the inside diameter of the pipe shall be pulled past the mortared joint to remove any fins or mortar extruding into the pipe barrel. After the inflated ball has been disturbed past the joint recess, the adjoining pipe sections shall not be disturbed. Once the inflated ball has been pulled through the pipe, the joints can be welded together.

77-1.03K Installation of Appurtenances

77-1.03K(1) General

Appurtenances shall be installed on the pipeline by the Contractor at the locations shown on the Drawings, or as directed by the Engineer. The details of the installations as shown on the Drawings, or described in the Specifications are typical only, and final installations may have to be varied to meet field conditions at the time of installation.

77-1.03K(2) Fittings

Joints between pipe and fittings shall be made in a manner similar to the method followed in joining the main sections of pipe. The trench bottom shall be graded uniformly so that no torsional strain will be placed upon fittings or connecting devices when backfill is placed. Proper thrust restraint shall be installed.

77-1.03K(3) Valves

Valves are to be installed by the Contractor in the locations shown on the drawings and as directed by the Engineer. All valves shall be set with valve stems in a vertical plane (+ 1%) parallel to the line of the pipe. Unless otherwise directed by the Engineer, all valves shall be fully supported on 2" x 12" redwood blocking which rests firmly on undisturbed ground. Butterfly valves shall be installed such that offset underground operators are northerly or easterly of the line of pipe. The Contractor will be required to

install operating nut extensions for all butterfly valves and for any valve where the operating nut will be four feet or more below finished grade. The installation shall be made after final grade is established and such that the top of the extension is a maximum of 12-inches below final grade.

77-1.03K(4) Electrical Continuity at Valves and Hydrant Buries

Electrical continuity shall be preserved across valves, hydrant buries, and any other epoxy-coated flanges where no flange insulating kits are indicated. The Contractor shall grind each epoxy-coated flange at one bolt hole to remove sufficient epoxy coating to assure that the bolt head and nut seat on bare metal.

77-1.03K(5) Valve Tubing, CTS Tubing, and Gate Caps

In general, valve and corrosion test station (CTS) tubing shall be installed to existing grade and raised continuously until final pavement is complete or as directed by the Engineer. The tubing shall be installed perpendicular to the main such that the operating nut, extension or terminal block is centered in the tubing. The tubing shall be primed and wrapped. A gate cap shall cover the tubing at all times after installation. The Contractor shall, at his own expense, clean or replace any valve caps which are not in the same condition as when issued. In addition, an asphalt ring shall be placed around the top of the valve tubing to the Engineer's satisfaction. Normally the asphalt ring shall extend 12 inches outside the tubing and be placed with a thickness of four inches.

77-1.03L Hydrant Installation

Hydrants of the type indicated on the plan shall be installed by the Contractor in the number and the locations indicated on the drawings or as directed by the controlling Fire Chief, or Engineer. All hydrants shall be accurately set (+ 1% vertical) and leveled at the proper elevation as indicated by the local fire jurisdiction above the finished grade. Hydrants shall be suitably blocked with concrete thrust blocks. Hydrant details and their relationship to the curb and/or sidewalk are shown on the Standard Drawings.

Hydrants shall be covered with a burlap bag until it is activated following permanent connection of mainline piping to the existing system. The Contractor shall protect fire hydrants whenever the Engineer determines that the situation warrants such protection.

77-1.03M Service Laterals

Service laterals may be installed using either open cut or trenchless techniques.

All new mainline taps for service transfer installations shall be located within one-foot of where the existing service line crosses the new mainline or the shortest distance to intercept the existing service line.

All new mainline taps for service renewal installations shall be located on the new mainline perpendicular to the meter or the shortest distance to intercept the existing meter.

All services are to be copper runs completely. Typical service transfer shall be used when existing service piping is copper. If service piping is any material other than copper, replace the service piping complete to the meter box. Service piping shall be installed, as shown on Drawings, as required by the Specification or directed by the Engineer.

Service piping shall be installed in a single piece of pipe from meter to main whenever possible. Joints on the service piping shall be minimized.

All existing copper services shall be insulated at the meter, as shown on the plans, unless already insulated.

Service connections shown as "connect service by hot tap" on the Drawings shall be made by Contractor. Contractor shall provide approved tapping machine, demonstrate that the machine is disinfected with all necessary equipment to complete the "hot tap" connection. The machine shall be an internal tooth shell

cutter or other designed cutter, which will retain the coupon.

Particular care shall be taken in the backfilling and compaction of the area around the taps to the main. Hand tamping will be required rather than equipment tamping or rolling.

Where the water service must cross the sewer line, the bottom of the water service, within 10 feet of the point of crossing, shall be at least 12 inches above the top of the sewer.

Prior to installing a service lateral using a punch tool trenchless technique, the Contractor shall locate and ascertain the depth of all conflicting utilities. The Contractor shall clearly mark the depth and location of conflicting utilities. For sanitary sewer and storm drain facilities, the Contractor may utilize existing evidence of depth, such as manholes. For all other utilities, the Contractor shall use a pipe locator with a depth indicator. The Contractor shall be responsible for installing the service without damaging any other utilities.

The Contractor shall use care to not damage any concrete curb, gutter and sidewalk in the installation of service piping and meter connections. Any damage shall be repaired or replaced, to the local jurisdiction's satisfaction at the contractor's cost.

77-1.03N Plugging of Ends of Pipe

At the end of each day's work or when pipe is not being installed, the end or ends of the pipe shall be securely sealed in such a manner as to prevent the entrance of any foreign material including water into the interior of the pipe.

77-1.03O Fabrication of Field Miters

Steel Pipe:

1. Unless otherwise specified, welded fittings shall be used at points of change of direction on steel pipe. Welding of fittings shall conform to the requirements of AWS B36.10.
2. When fabricated fittings are permitted for alignment changes, the Contractor will be required to cut, fit and reweld the pipe to form the required bend. Bends shall be made with one miter for each 22-1/2 degrees or fraction thereof. In general, miters are to be formed by cutting a straight length of pipe at an angle equal to one-half the total angle required and then rotating one section 180o and rewelding so that the total desired miter is obtained. Trimming and fitting that may be required to prepare the two pieces of pipe for rewelding is to be done at the expense of the Contractor. Miters may be cut by hand or machine at the option of the Contractor. All wrap, welding, repair to interior coating and exterior coating, shall be done in accordance with the requirements previously set forth for pipe jointing, coating and lining.

77-1.03P Installation of Insulating Joints, Test Stations, and Bonding Jumpers for Joints

As indicated on the Drawings, insulating joints shall be installed to electrically isolate sections of the pipeline. Insulating joints shall consist of plastic sleeves, washers and gaskets in flanged joints or sections of non- metallic pipe.

Care shall be exercised to correctly install all parts in flange insulating kits, to prevent reducing the dielectric properties by bridging across the interior of the pipeline with cement mortar lining, and to properly coat the exterior metal after fabrication and testing.

The Contractor shall give notification at least one day in advance so that the Engineer can be on hand to test insulating joints during and after fabrication and check test lead connections before protective coatings are applied.

The Contractor shall be responsible for the electrical continuity of all pipe and fittings, and the discontinuity of insulating joints. In the event that insulating joints become shorted or test lead wires or

bonding jumpers become disconnected during work or within the maintenance bond period, it will be the responsibility of the Contractor to make all repairs at his expense. Loss of the insulating qualities or broken wires from any cause (other than defective materials furnished by the MMWD) shall be repaired at the Contractor's expense, regardless of any prior approval given by the Engineer. Electrical shorts or discontinuities shall be determined by voltage and current measurements in conjunction with audio frequency signals or other means, and shall be considered detrimental when of a magnitude to jeopardize the application of cathodic protection as established by the Standards.

77-1.03Q Installation of Thrust Blocks

All pipe fittings which are not otherwise adequately restrained shall be blocked against the undisturbed soil on the sides of the trench by means of concrete thrust blocks or by gravity anchor blocks in the case of vertical bends, in accordance with the typical details shown on the drawings. It shall be the Contractor's responsibility to adequately restrain all permanent and temporary fittings at all times.

77-1.03R Cathodic Protection

77-1.03R(1) Installation

77-1.03R(1)(a) Corrosion Test Stations and Cable Connections

Corrosion test stations shall consist of conduit outlets, aluminum tubing and cover outlets or meter box outlets where test leads connected to the pipeline are terminated. The type of outlet and location shall be as indicated on the Drawings or located by the Engineer at the time of installation.

The test lead cables shall be Type TW No. 8 and no splicing will be allowed. The Contractor shall provide enough slack in the cable near the main so that backfill will not break the connection. Cables may be run in the same trench with pipe, and 30 inches of cover must be maintained in horizontal runs. Twelve (12) inches of slack shall be provided at outlets to permit withdrawing ends for test purposes.

Cable connections shall be made to steel pipe by gas brazing or by Cadweld Type TB-3 connections. Connections to cast iron pipe shall be made by means of Cadweld Type HB connections. In all cases, wires and the surface to which they connect shall be cleaned and prepared in accordance with the manufacturer's recommendations, and only 100% welds, free of defects, will be accepted. After connection and approval by the Engineer, bare wire and pipe shall be primed and coated with tape.

77-1.03R(1)(b) Protection along Steel Pipe Sections

Near the termination of steel pipe sections, jumper wire shall be cadwelded to the steel pipe on one end, with the other end to be pulled into a test station that is to be set as indicated on the Drawings.

Where steel pipe sections surround an insulated piece of equipment or insulated section of pipe less than 3 ft. in length, a continuity wire shall be cadweld to each steel pipe section for continuity of cathodic protection across the insulated area.

77-1.03R(1)(c) Protection of Couplings

Where flexible couplings and transition couplings are installed, a jumper wire shall be cadweld to the body of the coupling on one end and tied into another bonding jumper wire that is already part of the cathodic protection system at the other end as indicated on the Drawings.

77-1.03R(1)(d) Protection of Metallic Fittings on Plastic Pipelines

Near the termination of all PVC and plastic pipe sections greater than 3 ft. in length, tracer wire shall be pulled into a test station that is to be set as indicated on the Drawings. Tracer wire shall be laid parallel to all PVC and plastic pipelines. Split-bolt connections shall be installed along the tracer wire where another tracer wire shall be run from the split-bolt connection and cadweld to any metallic fittings (saddles, mech. joint fittings) installed along the PVC/plastic pipeline.

77-1.03R(1)(e) Anode Placement

Anode shall be buried approximately 2 ft. away from the pipeline. Anode may be installed vertically in an augured hole with native backfill tamped carefully to afford good soil contact. Copper lead wire shall be pulled into a test station location set as indicated on the Drawings.

Provide slack in all wires used in cathodic protection so that wires are not broken during backfill.

77-1.03R(2) Testing and Inspection

Set utility box(es) and/or aluminum tubing as indicated on the Contract drawings.

Upon installation of anodes, continuity, bonding and jumper wires, pull leads into test station location and notify the Engineer for testing.

77-1.03S Hydrostatic Pressure and Leakage Testing

77-1.03S(1) General

Hydrostatic tests shall be performed on all pipe installed in this project. Contractor shall furnish all equipment, material, personnel, and supplies to perform the tests and shall make all taps and other necessary temporary connections. The Contractor must use an approved, properly functioning, double-check valve backflow prevention assembly when loading the line for testing. Test pressure shall be measured at the lowest point on the line unless specifically noted otherwise. Hydrostatic tests shall be performed on all piping at a time agreed upon and in the presence of the Engineer.

The hydrostatic test for buried piping shall be made after all pipe is installed and backfilled. However, the Contractor may conduct preliminary tests prior to backfill. If the Contractor elects to conduct preliminary tests, he shall provide any necessary temporary thrust restraint. In no case will final testing be done prior to acceptance of backfill compaction.

The hydrostatic test for encased piping shall be made after all pipe is installed and encased. However, the Contractor may conduct preliminary tests prior to encasement. If the Contractor elects to conduct preliminary tests, he shall provide any necessary temporary thrust restraint.

Whenever curb cocks are to be installed, they shall be installed to final grade and included in the facilities tested.

All supports, anchors, and blocks shall be installed prior to the hydrostatic test. No temporary supports or blocking shall be installed for final test.

It shall be the responsibility of the Contractor to block off or remove equipment (valves, gauges, etc.) which are not designed to withstand the full test pressure.

The Contractor shall provide pipe taps, nozzles and connections as necessary in piping to permit testing including valves to isolate the new system, filling the lines, purging air, draining the lines and disposal of water, as is necessary. These openings shall be plugged in a manner favorably reviewed by the Engineer after use. The Contractor shall provide all required temporary bulkheads and thrust restraints.

If leakage exceeds the allowable for gasketed joint pipe, the installation shall be repaired or replaced and leakage tests shall be repeated as necessary until conformance to the hydrostatic test requirements specified herein have been fulfilled. All visible leaks shall be repaired even if the pipeline does not exceed the allowable leakage rate.

The Contractor shall submit all test reports to the Engineer and keep records of each piping test, including:

1. Description and identification of piping tested.

2. Test Pressure
3. Date of Test
4. Witnessing by Contractor and Engineer
5. Test Evaluation
6. Remarks, including such items as leaks (type, location) and repairs made on leaks

When not shown on the Drawings, the Contractor shall install valved outlets at high points on piping to permit venting of air. Valves shall be capped after testing is completed.

77-1.03S(2) Test Procedure

Schedule: As soon as is practicable after any section of pipeline has been completed, including acceptance of backfill compaction results, and when directed by the Engineer, that section of pipeline shall be subjected to a hydrostatic pressure and leakage test.

Initial Filling: After the pipeline or section thereof has been filled, it shall be allowed to stand under a slight pressure for at least 24 hours to allow the mortar lining to absorb what water it will and to allow the escape of air from any air pockets.

Test Section: The Contractor shall not test a section of pipeline greater than 1000 feet in length nor an elevation difference of greater than 100 feet, without the Engineer's approval.

Test Pressure: Unless otherwise specified, the test pressure shall be 200 pounds per square inch or fifty (50) percent above static line pressure at the lowest point of the test section, whichever is greater.

Duration and Conditions of Test: After the initial hydrostatic pressure is applied to the section to be tested, it must remain unaided within 10 P.S.I. of the initial pressure for a duration of two hours for distribution pipelines and four hours for transmission pipelines 24- inches in diameter and larger. If the pressure drops below this limit, the section being tested will be considered defective. The Contractor shall determine the cause of failure and make necessary repairs. The test shall be repeated until the Engineer is satisfied that leakage requirements have been met and the line is actually ready for use. The Engineer may require that valves be closed to isolate sections of piping for testing as individual mains. The Contractor shall not be entitled to additional payment for any work associated with additional testing required by the Engineer as a result of failed tests, or work required to isolate failure locations.

Leakage Measurement: After the pressure test and if any pressure drop has occurred, the Contractor shall determine the leakage volume. This shall be achieved by injecting water from a calibrated container into the pipeline via a pressure pump until the pressure again reaches the initial applied pressure. The amount of water injected is the leakage volume.

Welded Steel Pipe Leakage: There shall be no leakage allowed for welded steel pipe installations.

Rubber-Gasket Joint Pipe Leakage: If the Contractor cannot determine the point(s) of leakage by thorough physical examination performed to the satisfaction of the Engineer, the pipeline will be considered acceptable if the amount of leakage is less than that determined by the following formula:

$$L = \frac{ND\,(T)1/2}{14800}$$

where L = leakage in gallons per hour
N = total number of gaskets
D = nominal pipe diameter in inches
T = test pressure in psi

77-1.03T Flushing

After successful pressure and leakage testing, the Contractor shall thoroughly flush the pipeline and appurtenances prior to chlorine application. The flushing velocity shall be a minimum of 2.5 feet per second unless the Engineer determines that field conditions will not permit the required flow to be discharged to waste. The flow rates required to produce the minimum acceptable velocity are shown below.

REQUIRED OPENINGS TO FLUSH PIPELINES*
(40-psi Drop in System Pressure)

Pipe Size (Inches)	Flow Required to produce 2.5 fps Velocity (gpm)	Temporary Plug/Tap Size (Inches)	Hydrant Outlet Number	Nozzle Size (Inches)
4	100	2	1	2-1/2
6	220	2	1	2-1/2
8	400	2	1	2-1/2

*With 40 psi drop in system pressure, a 2-1/2 inch hydrant outlet nozzle will discharge approximately 1,000 gpm, and a 4-1/2 inch hydrant nozzle will discharge approximately 2,500 gpm.

Flushing shall be accomplished through an opening furthest from the point of entry of the flushing flow. The entire system however, shall be flushed including hydrants, laterals and blowoffs. The Contractor may be required to assist in dechlorinated of discharge water as it is being flushed.

Flushing shall be continued as long as the discharged water appears turbid to the Engineer. Flushing shall allow at least two exchanges of the volume of the water in the pipeline unless otherwise determined by the Engineer.

If necessary, the Contractor shall provide temporary piping to divert flushing water to natural drainage in order to prevent erosion or nuisance.

77-1.03U Disinfection

After flushing, the Contractor shall request the MMWD disinfect the newly constructed facilities.

The MMWD will schedule disinfection within two working days of the Contractor's request. The Contractor shall furnish labor and material to assist in the disinfection operation.

The facility is loaded with chlorine at a controllable level.

All hydrants, service piping or other appurtenances, are subject to controlled flow insuring introduction of chlorine solution into all sections of the new facility.

Following the chlorine contact period the disinfection solution shall be completely dechlorinated and flushed from all facilities, including appurtenances such as hydrants, service piping, etc.

Bacteriological sampling and testing (see paragraph below) is performed to determine acceptability based upon the presence of coliform organisms.

Two consecutive passing tests, with sampling separated by 24 hours, are required.

The time necessary for passing the bacterial testing process is a minimum seven (7) business days;

that is, 48 hour notice, 24 hour chlorination, 24 hour chlorine contact time, 24 hour flushing and sampling, 24 hour second sampling, 24 hour results. The Contractor shall schedule his work with this consideration.

The chlorinating and flushing shall be done through an approved, properly functioning, double check valve backflow prevention assembly to prevent backflow.

The chlorinated water shall remain in the pipe for at least 24 hours unless otherwise directed by the Engineer. At no time shall the chlorinated water be allowed to flow into an existing water system.

Following the required contact period, the pipeline, including hydrants, service laterals and blowoffs, shall be flowed until the chlorine concentration in the water leaving the main is less than 1.0 mg/l. The Contractor shall dispose of chlorinated discharge in such a way that it will not flow back into the pipe and will not cause harm to surrounding property. If necessary, chlorinated discharge shall be contained and removed to a proper disposal site, or some dechlorinating agent such as sodium thiosulfate or sodium bisulfate applied. The Engineer will assist in determining if dechlorination is necessary and what methods shall be employed.

Bacteriological samples shall be collected and analyzed by the Engineer. Samples shall only be collected Monday-Thursday. Analysis of the samples requires between 26 and 32 hours.

While analysis of the samples is being conducted, the pipeline should remain isolated and a positive pressure must be maintained in the new line until the time of actual connection to the existing system. In order to insure this, the Contractor shall, at his expense, provide and install a temporary pressure gauge and/or temporary piping with an approved, properly functioning, double check valve backflow prevention assembly or approved backflow prevention device as directed by the Engineer. This gauge shall be periodically checked, and if positive pressure is not maintained, additional bacteriological testing may be required.

The contractor shall flush, chlorinate and repeat until achieving two consecutive passing samples.

After it is determined that the pipeline is free from bacteriological contamination, all temporary piping shall be dismantled and the connections to the existing pipeline shall be made.

If through any fault or act of the Contractor, the facility must be disinfected more than once or compliance with the above requirements has not been fulfilled, the Contractor shall be held responsible and shall pay for the expense of any additional chlorination work or related work as herein required.

77-1.03V Making Connections to Existing System

Connections to the existing system are to be made by the Contractor at the points indicated on the Drawings or as directed by the Engineer. It shall be the Contractor's responsibility to adequately restrain all fittings at all times.

The Contractor shall be responsible for maintaining service in the existing piping system until that piping is abandoned. Temporary fittings and thrust blocks shall be installed on the existing piping wherever the pipe is cut and remains in temporary service but is not connected to the new system.

The Contractor shall be responsible for dewatering the tie-in area of all waters released from the piping as a result of the cutting of the main for making the connection.

The Contractor is warned that the existing piping may be other than standard size. Prior to scheduling a connection, he shall expose the existing pipelines at the point of connection to verify the actual pipe size and required couplings and fittings for connections.

When connecting to the rough barrel of an Asbestos Cement (AC) Pipe, the Contractor shall measure the outside diameter of the rough barrel on the existing AC. The Contractor shall report the dimension to the Engineer prior to pressure testing new mains or scheduling a shutdown for connection to the existing piping. The Contractor shall conform to all regulatory requirements, including applicable requirements of Federal OSHA Title 29 and California State OSHA, for the handling of AC pipe.

Connections shown as "hot taps" on the Drawings shall be made with the assistance of MMWD forces. Upon contractor completion of the tapping valve installation, the contractor shall prepare the site for the MMWD installation of the "hot tap." The MMWD shall provide the tapping machine and one technician. The contractor shall provide the necessary air compressor, lift equipment and all other assistance required.

Since connections will result in temporary interruption of service in the area, it will be essential for the MMWD to give at least two working days of advance notice to the affected consumers. Therefore, the Contractor shall notify the Engineer a minimum of four working days prior to making any connection that will necessitate shutdown of any water main currently in operation. The Contractor shall coordinate his scheduling of connections with MMWD activities. In addition, the Contractor may be required to supply by-pass connections to maintain service to consumers as directed by the Engineer. The Contractor shall receive no additional compensation for such bypasses.

Connections shall only be made on Tuesday through Thursday and only if weather permits as determined by the Engineer. For customer service considerations, the MMWD elects not to notify consumers on Friday for a shutdown of water service on the following Monday. Therefore, Monday notifications mean that the first opportunity for connection or shutdown in a week is Tuesday.

The contractor shall plan his work in consideration of the time constraints inherent in the testing and notification process described above.

77-1.03W Abandoning Existing Pipelines

All piping to be abandoned, as shown on the plans, is abandoned only when the pipe has been taken out of service, physically disconnected from the active water system, and has been sealed by the Contractor.

Seal all cut ends of the existing piping that are not connected to the new system by either installing temporary fittings on the existing piping or by plugging the cut end with concrete extending two pipe diameters into the pipe. After the concrete placement, the pipe end shall be blocked with a 2-inch thick redwood block.

77-1.03X Salvage of Materials

During the work all salvageable material, equipment or appurtenances which are removed from existing facilities shall remain the property of the MMWD and shall be returned to the MMWD yard. The determination of which material is salvageable shall be made by the Engineer whose decision shall be final. Material which is not designated salvageable shall become the property of the Contractor and be removed from the site of the work.

77-1.04 PAYMENT

The costs for the waterline relocation work will be covered under the following bid items.

The 4" HMA pavement plug will be measured and paid for under Hot Mix Asphalt (Type A), Ton and Place Hot Mix Asphalt (Miscellaneous Area), SQYD.

The Class 2 aggregate base will be measured and paid for under Class 2 Aggregate Base, CY.

The remainder of the work performed to relocate the waterline will be measured and paid for under

Waterline Relocation, LF. Measurement will be the linear foot measurement of the relocated 6 inch waterline at the surface level. The cost will include all work, materials and equipment provided to perform the 6 inch waterline relocation including but not limited to the sand bedding, service relocation, hydrant relocation, cathodic protection, waterline tie-ins, testing, disinfection, temporary connections, thrust blocks, permanent and temporary supports, shoring, temporary illumination.

Add to section 86-1.01A:

PG&E electrical undergrounding work must comply with PG&E's greenbook entitles "Electric & Gas Service Requirements 2016". A copy of the "Electric & Gas Service Requirements 2016" is included in the Information Handout.

Add to section 86-2.32

86-2.32 LANE USE SIGN

86-2.32A General

TELEGRA NextGen Lane Use Signs (LUS) are considered as pre-qualified signs. All other proposed LUS other than TELEGRA NextGen Lane Use Signs (LUS) must be approved equal by the BATA Engineer.

86-2.32A(1) Summary

Section 86-2.32 includes specifications for installing lane use sign (LUS). The work consists, in general, of furnishing, testing, delivery, warranty, and installation/testing assistance for sign control cable, sign assembles, sign controller assemblies, and controller cabinet assemblies for Lane Use Signs (LUS) as described in this section.

86-2.32A(2) Submittals

Complete shop drawings for the sign assemblies must be submitted to the Engineer for evaluation and approval. The Engineer will be allowed 30 working days to review each submittal. All testing reports as required by this section shall be submitted to the Engineer. .

Complete shop drawings must include mechanical, electrical, and physical drawings.

The following operating characteristics must be identified: rated voltage, power consumption, amperes and volt-ampere. Sign assemblies must have the manufacturer's name and trademark permanently marked on the inside of sign. Individual sign assemblies must be identified with a model, serial number and shipping date stamped on a tag attached to the sign for warranty purposes. The information may be either depressed or raised, and must be legible and durable.

86-2.32A(3) Quality Control and Assurance

86-2.32A(3)(a) Warranty

The Contractor must provide a Warranty and a Certificate of Compliance and must maintain, replace or repair any sign furnished by the Contractor that exhibits a failure due to workmanship or material defects for 60 months from the date of acceptance of the Contract. The Contractor must maintain all Contractor-furnished equipment a minimum of twice per year on-site at the field installation. The Contractor must replace or repair any sign which exhibits a reduction in light intensity greater than 50 percent within the first 36 months of operation, or if more than 20 percent of the LED's fail during that period. The warranty must include all parts, shipping, labor, and expenses for repairing or replacing equipment.

86-2.32B Materials

86-2.32B(1) General

Each sign assembly must consist of one sign panel and necessary converter boxes for communication between sign controller and the sign controller assembly. Each sign panel must include an LED matrix panel, environmental housing, and internal equipment mounting supports.

Each sign controller assembly consists of one controller and necessary converter boxes for communication between sign controller to the sign assembly.

Each sign assembly and sign controller assembly must meet the following general requirements:

All equipment must perform to the minimum environmental temperature requirements of -35°F to 165°F and a humidity range of 0 percent to 95 percent relative non-condensing.

Sign assemblies and related equipment must be capable of operating in all weather conditions and withstand a wind load of 90 mph without permanent damage to sign, sign structure, mechanical equipment, or electrical equipment.

Sign Controller Cabinet (SCC) or equipment cabinet accommodates electronics needed to manage sign functionality, power supplies that provide power to the LUS and communication equipment that is used to connect the LUS to its parent device (Traffic Control Center). It also manages standalone operation when there is no communication to TCC. SCC can be made as a standalone cabinet or as 19" rack mount components.

Company or Contractor logos must not appear anywhere on the exterior of the sign housing.

The sign must be compliant with all applicable federal and state standards along with appropriate NTCIP standards.

All sign system components must use interfaces using connectors. Connectors must be provided for connections between sign assemblies, converter boxes, and controller assemblies.

86-2.32B(2) Display

86-2.32B(2)(a) General

This section describes the display requirements for each sign assembly to be furnished as part of this contract. Overall requirements of all sign assemblies must meet the following requirements:

1. Capable of displaying full color customized graphics or text.
2. Each sign must be able to display or remove a message received remotely, or locally.
3. Each sign must be able to display a message stored in its library upon request both remotely and/or locally.
4. Each sign must allow the user to be able to select a default message that will be displayed after a communication loss event has occurred.
5. Each sign must be able to display messages using the following types of effects:
6. Static Message – The selected message is displayed continuously on the sign face until the sign controller blanks the sign or causes the display of another message
7. Flashing Message – All or part of a message is displayed and blanked alternately at rates between 1.0 seconds and 9.9 seconds. The flash rate is user programmable in increments of 0.1 seconds
8. Scrolling Message – The message moves across the display face from one side to the other. The direction of travel is user selectable as left-to-right, right-to-left, top-to-bottom, or bottom-to-top
9. Multiple-Page Message – A message contains up to two different pages of information, with each page filling the entire pixel matrix. Each page's display time is user programmable from 1.0 seconds to 25.5 seconds, and adjustable in increments of 0.1 seconds
10. Each pixel module must be able to display a minimum of 16 million colors.
11. Each sign's resident font must be the Standards Font as defined in NEMA TS 4, Section 5.6.1. The sign must have the ability to display downloaded fonts.
12. Each sign must be able to use any combination of its pixels to display a message, including characters of any user-specified size and user-specified graphics elements.

86-2.32B(2)(b) Display Message and Color

LUS (small) assembly and controller must, at a minimum, meet the following display requirements:

Small LUS display lane use status using a red X and green down arrow as illustrated in the sample conceptual displays below:

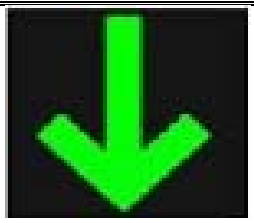

LUS (large) display lane use status using a yellow diagonal left arrow with “MERGE” and green down arrow in the sample conceptual displays below:

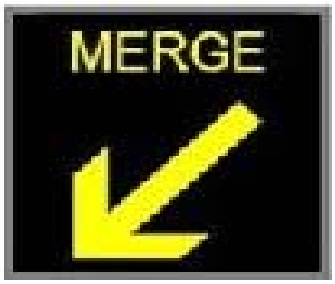

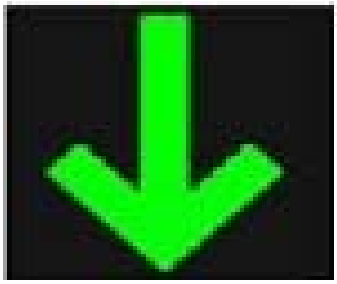

86-2.32B(2)(c) LED Modules

LUS is built of multiple LED modules which form active display area part of front face. Modules are fixed to frame using tool-free mounting gear and connected to communication & power supply bus.

Dimension of each LED module is based on the size of LUS. IP protection of each module is IP67. LED modules are fixed to vertical columns of the frame. Each module is replaceable individually without the use of tools. Modules are interconnected by means of internal power & communication cables using IP67 protected connectors, placed in vertical columns of the frame.

Cable transfers both DC power supply and CAN bus communication between junction boxes and LED modules. Number of cables between junction boxes and LED modules used in a sign depends on the size of the sign and number of LED modules used.

Each module contains pixels arranged in a matrix and each pixel consists of a red, green and blue LED.

Average current through each LED is always kept at very low levels, well below recommended operating conditions, thus ensuring minimal power dissipation, long life of LEDs, low degradation of light output throughout the years and eliminates need for forced cooling. A large heat sink is embedded in each module’s housing to ensure efficient heat removal.

LED drivers constantly check condition of LEDs no matter if they are currently turned on or off. That feature is known as cold-state LED testing. It enables the user to have information about condition of LEDs even when the sign isn’t displaying anything.

Light level adjustment is managed through LUS controller which uses illumination meter modules and continuously measures ambient illumination level. Based on these measurements it adjusts LED intensity.

Every LED module has temperature sensor for monitoring temperature inside LED module. If in some extreme unregularly conditions, if temperature approaches the defined threshold, the sign controller will reduce the brightness of the LEDs and sign controller will trigger a warning notification. As the temperature drops, the controller will gradually increase the brightness of the display face, eventually returning to full brightness.

Front panel heating system controlled by sign controller. Front panel heating system is disabled when one or more power supply in power supply unit is faulty.

A spare LED module will be available inside the sign controller cabinet.

86-2.32B(2)(d) Housing

LUS housing consists of frame made of aluminum alloy, anodized to natural aluminum finish, and LED modules made of die casted aluminum alloy, powder coated in RAL 9006.

LUS front plate consists of active panel area built by matrix of individual LED modules and contrast frame build around active area.

Front plate of LED modules is made of UV stabilized polycarbonate. Contrast frame and front plate are painted with special black matte paint ensuring very low sun reflection.

The sign housing maximum dimensions and weight for each sign type are shown in the table below. This includes the housing, border, LED matrix, and equipment within the sign housing.

Sign Type	Width (inches)	Height (inches)	Depth (inches)	Weight (lbs.)
LUS (Small)	29-9/16	29-9/16	5-15/16	150
LUS (Large)	42-11/16	42-11/16	5-15/16	240

The sign housing must provide quick service access for all LED display modules, electronics, power supplies, environmental control equipment, air filters, wiring, and other internal components.

The border around the outside of the sign must be between 6”-8” on each side, top, and bottom for LUS.

The front face of each overhead sign must be built at an angle of 3 degrees vertically toward the viewing motorists. Display modules must be parallel to the front sign face, so that use of the LED viewing cone is optimized.

Exterior sheet material must be aluminum alloy number 5052-H34, and must have a minimum thickness of 0.125 inches. Exterior sheet seams must be continuously welded and waterproof. Structural frame members (I-beams, C-channels, Zee-extrusions, and bar stock) must be aluminum alloy number 6061-T6.

Housing must be welded and inspected in accordance with the requirement of latest revision of ANSI/AWS D1.2 Structural Welding Code-Aluminum. Housing must be constructed to present a clean, neat appearance, and the internal equipment must be protected from rain, snow, dirt, and corrosion.

All exposed metal on the front face must be coated with black Kynar 500 resin or an equivalent oven-fired fluoropolymer-based coating having a minimum outdoor service life of 20 years. This must include the aluminum border outside the LED display matrix, and all the mounting and assembly hardware.

All equipment, components, modular assemblies and other materials must be removable, transportable, and capable of being installed as a single unit by a single technician utilizing a one-person aerial lift truck. Structural members are not included in this requirement.

Ribbon cable must be protected at all points of physical contact where it touches metallic frameworks. Either the ribbon cable or the frame, or both, must be wrapped with a protective covering where the cable touches the framework, to prevent cable insulation rub-through from road induced vibration in the sign framework.

Sign housings must be constructed so that an anti-glare polycarbonate or hardened acrylic font panel with anti-glare film is contained within the extruded aluminum frame.

The extruded aluminum frame must be hinged to allow access to the interior of the sign and have fully welded seams. The frame must have a powder coat painted with high gloss textured black finish meeting the color standards of Federal Specifications 595b, 17038. A 9.5mm nominal black anodizes aluminum hex cell louver having 95 percent open area and providing 60 degree shielding must be installed between the lamp clusters and the front face panel to enhance resistance to sun exposure. The louvers must be secured in front of the LED pixels with captive type retainers.

LUS must be gasketed with a closed cell neoprene gasket making the inside of the sign air-tight and water-tight. Stainless steel latches must provide for quick access to the interior of the sign. The sign must be provided with devices to retain the face panel in a fully open mode assisting the servicing of the sign. All exterior hardware must be of stainless steel or cadmium plated materials. No internal fans or conditioning must be required to maintain acceptable temperature levels inside the housing.

Housing must include at least 4 fixed lifting eyes.

Housing must be secured and impervious to tampering by a padlock and hasp.

86-2.32B(3) Pixel

The LED pixels must conform to the following specifications:

1. Each LED must be ultra-bright type and have a minimum rating of 100,000 hours MTBF. The maximum luminosity degradation must be less than 15% and must maintain a brightness of 34 candelas after 48 months of operation.
2. Each LED pixel must be ultraviolet stabilized.
3. Each LED pixel must be through-hole lamp style LEDs or RGB Surface Mount (SMD) LED technology.
4. Each sign must be able to light pixels a 255 brightness levels. Pixel brightness must be 0 candelas at display level 0; 43 candelas (+/- 3 candelas) at a display level of 255; and linearly between 0 and 43 candelas for intermediate display levels. Photocell controlled brightness levels must be verifiable via software control through the Ethernet connection.
5. All pixels on a single sign must display at the same brightness level; all signs on a single sign structure must display the same brightness level.
6. The shape of an individual pixel must be circular and the LED must be evenly distributed in the pixel.
7. Each pixel must have a viewing angle of 30 degrees or more; each LED on a given sign must have the same viewing angle.
8. Each Red LED must utilize AlInGaP semiconductor technology and must emit light that has a peak wavelength of 650 nm (+/- 5 nm). Each Green LED must utilize InGaN semiconductor technology and must emit light that has a peak wavelength of 525 nm (+/- 5 nm). Each Blue LED must utilize InGaN semiconductor technology and must emit light that has a peak wavelength of 470 nm (+/- 5nm).
9. Each pixel must display full color.
10. The LED light output must be automatically dimmable by means of one or more photo sensors installed in the housing. The light output must be proportional to the ambient light (more light / more output and less light / less output).
11. The circular base of the discrete LEDs must be soldered so that they are flush and parallel to the surface of the printed circuit board. The longitudinal axis of the LEDs must be perpendicular to the circuit board.
12. Each LED must be from the same manufacturer and have the same color.
13. Each pixel must contain an equal quantity of discrete LEDs and LED strings.
14. The failure of an LED string or pixel must not cause the failure of any other LED string or pixel within the sign.

15. Each pixel must be driven using Pulse Width Modulation (PWM) of the drive current to control the display intensity. This LED driver circuitry must vary the current pulse width to achieve the proper display intensity levels for all light conditions. The drive current pulse must be modulated at a frequency high enough to provide flicker-free operation and a minimum of 255 brightness levels. Voltage fluctuations must cause no visible flicker or change in pixel luminous intensity. The messages must be displayed continuous and uniform when viewed by drivers.

86-2.32B(3)(a) Pixel Module

The front face must be constructed of a matrix of pixel modules, with each module supporting and protecting an array of LED pixels. Each pixel module must be constructed as follows:

1. Each pixel module must consist of display pixel LEDs, printed circuit board (PCB), connectors, Ethernet Adapter and diagnostic circuity that provides the ability to store and select messages to be displayed as well as providing feedback to the sign's controller on the modules health and pixel status.
2. Each pixel module for LUS must have an identical maximum horizontal and vertical pitch between pixels of 35 mm or less. Separation between the last column of one module and the first column of the next must be equal to the horizontal distance between the columns of a single display module.
3. Pixel modules of LUS must be manufactures confused the same such that replacement modules can be used in any of the signs.
4. The signs must use Red-Green-Blue (RGB) Light Emitting Diodes (LED) in pixels to form a matrix of modules to display full-color graphics and text (8"-18" character height).
5. Each pixel module must consist of an integrated LED printed circuit board.
6. If multiple boards are used, they must be mounted physically to each other using durable non-corrosive hardware. They must be electrically connected via one or more header-type connectors. The header connectors must be keyed such that the boards cannot be connected incorrectly. Each LED pixel module must be manufactured using laminated fiberglass printed circuit boards.
7. Each LED display module must be mounted to the rear of the display's front face panels using durable non-corrosive hardware. No tools must be required for module removal and replacement. The modules must be mounted such that the LEDs emit light through the face panel's pixel holes and such that the face panel does not block any part of the viewing cone of any of the LEDs in any pixel. The use of light enhancing lenses to achieve defined viewing cone must be cause for rejection.
8. LED display module power and signal connections must be a quick-disconnect locking connector type. Removal of a display module, pixel board, or driver circuit board form its display module must not require a soldering operation.
9. All exposed metal on both sides of each printed circuit board, except connector contacts, must be protected from water and humidity exposure by a thorough application of conformal coating. Bench level repair of individual components, including discrete LED replacement and conformal coating repair, must be possible.
10. Individual addressing of each LED display module must be configured via the communication wiring harness and connector. No on-board addressing jumpers or switches must be allowed or required.
11. Removal or failure of LED modules or pixels must not affect the operation of any other LED module, pixel, or sign component. Removal of one or more LED pixels or modules must not affect the structural integrity of any part of the sign.
12. It must not be possible to mount an LED display module upside-down or in an otherwise incorrect position within the display matrix.
13. All LED display modules, as well as the LED pixel boards and driver circuit boards, must be identical and interchangeable throughout the sign.
14. The maximum weight of each pixel module must not exceed 7 lbs.
15. Each pixel module must accept 18 VAC to 28 VAC (22 VAC nominal) as input voltage.

16. The supply input circuit must be fused.
17. Each pixel module must have an automatic shut down and restart for such conditions as overheating, overcurrent or a ground fault.

86-2.32B(3)(b) Pixel Module Communication

Each sign must be configured such that each pixel can be controlled via Ethernet communications according to the following specification:

1. Each pixel module must be microprocessor-controlled and must communicate with the sign controller over an Ethernet communication network using a TCP/IP addressable protocol.
2. The microprocessor must process commands from the sign controller to display data, perform diagnostic tests, and report pixel and diagnostic status.
3. The microprocessor must be capable of 10BASE-T Ethernet Communications and TCP/IP addressable protocols.
4. Each pixel module must be Ethernet Addressable (m.n.x.y.), where x is the number of modules in the vertical direction starting at 1 and y is the number of modules in the horizontal direction starting at the signs lower left corner. The pixel module in the upper left corner of the sign must use an Ethernet Address of m.n.1.1.
5. The Network Mask must be 255.255.0.0.
6. The pixel module must communicate with the sign controller using TCP port 80.
7. The pixel module must have a minimum of 10 internal memory buffers to hold transmitted messages.
8. The pixel module must have one Active Message buffer which will hold the bitmap for the currently displayed message.
9. When transmitting the current LED status the pixel module must respond with the value attained by measuring the actual LED output.

86-2.32B(4) Sign Controller Assembly

86-2.32B(4)(a) General

The sign controller must be programmed to receive NTCIP-compliant sign control commands from the central controller or laptop computer, transmit NTCIP-compliant responses as requested to the central controller or laptop computer, monitor sign and message status and control sign operation and message displays.

The sign controller must be a 19-inch rack-mountable traffic controller provided with resident firmware stored in non-volatile memory.

The controller protocol must not have proprietary extensions that limit functionality or accessibility, unless these extensions are made fully available to Caltrans without restriction.

The controller must perform all communication, control and feedback functions and must be the only sign controller. No intermediate sign controller must be used.

The controller must include a minimum of three ports: one (1) Ethernet port for communications to Caltrans' central system, one (1) port for communication to the sign assembly, and one (1) port for diagnostics.

The controller must have power-up and auto-restart capabilities with a programmable default message (including a blank message) when recovering from a power off condition. A hardware watchdog circuit must be utilized to provide automatic reset to the controller and the modem. The central computer must be capable of remotely commanding a controller and modem reset.

The sign controller must be capable of being controlled from the central controller or the laptop computer.

Communication and control lines between the sign controller and the system interface must be opto-coupled.

86-2.32B(4)(b) Sign Controller Firmware

The sign controller firmware must meet the following requirements:

1. NTCIP (National Transportation Communication for ITS Protocol) compliant including, but not limited to, the following standards:
    - Device Data Dictionary: NTCIP 1203 – Object Definitions for Dynamic Message Signs;
    - Application Profile Level: NTCIP 2301, AP – Simple Network Management Protocol (SNMP);
    - Application Profile Level: NTCIP 2303, AP – File Transfer Protocol (FTP);
    - Sub-network Profile Level: NTCIP 2104, SP – Ethernet; and
    - Transport Profile Level: NTCIP 2202, TP – Internet (TCP/IP and UDP/IP).
2. Interact with the sign panel through a menu-driven interface and be accessible via either the keyboard or through the RS-232 port.
3. Access protected by multi-level password control.
4. At a minimum, support the following Tags as defined in NTCIP 1203, v02.32a:
    - Flash;
    - Font;
    - Graphic;
    - Justification –Line;
    - Justification –Page;
    - New Line;
    - New Page;
    - Page Time; and
    - Spacing Character.
5. Receive a command message from the RTMC and command the signs within two seconds of the operator making the command from the RTMC.
6. Transmit a confirmation to the central system of the message(s) being displayed on the signs.
7. Transmit operational status of each sign to central system every 30 seconds.
8. Monitor and record fault or failure information for signs and controller, and transmit message to RTMC within 2 seconds of identification.
9. Allow for the central system to generate reports documenting usage and failure statistics for each sign, controller, power, and communications.
10. If communication is lost to the controllers for longer than a user-defined period of time, the controller must display its neutral message, per NTCIP 1203. When communications are restored for a user-defined length of time, the sign must be reactivated with user command.
11. Store a minimum of 20 messages within local sign controller for selection by user.
12. Display messages stored at local controller, messages transmitted by user from central system, or messages from a remote application.
13. Equipped with a password verification system to confirm access by authorized users.

14. Log each message and message change. The log must include beginning and ending time stamp, location ID, and user ID that requested change. Display log must be stored locally at the controller and must be accessible by a central system for generating reports or downloaded to an archive.

86-2.32B(5) Sign Control Cable

The sign control cable must connect the sign panel to sign controller enclosure and must be continuous without splicing. Communications between the sign and the controller must be provided in a signle cable. IN the case of LUS, a maximum of one control cable must be allowed between each sign and between the sign controller and the nearest LUS. The cables must be provided by the sign manufacturer. The cable manufacturer's identification must be printed in white ink every foot along Ethernet CAT6 outdoor type and the surface of the cables. The cables must be rated for outdoor use.

Cables and connectors are protected from direct sunlight and rainfall by horizontal and vertical coverings. Quarter turn locks are provided for securing the coverings in closed position

86-2.32B(6) Sign Power Requirement

Maximum AC power must not exceed the following loads for each of the sign types assuming LED display pixel matrix with 100% of the pixels operating at their maximum possible drive current.

<u>Maximum AC power (per sign type):</u>

1. Small Lane Use Sign – 100 W
2. Large Lane Use Sign – 200 W

Typical AC power must not exceed the following loads for each of the sign types assuming a LED display pixel matrix, with 25% of the pixels operating at their maximum possible drive current.

Each sign must operate from 120/240 VAC, 60 Hz, single-phase power source, including neutral and earth ground.

The LED display matrix must be powered by regulated switching DC power supplies that operate from 120 VAC input power and have an output of 24 VDC or less. Power supplies must be wired in a redundant parallel configuration that uses multiple supplies per display. The supplies must have a "current sharing" capability that allows them to provide equal amounts of current to their portion of the LED display. Power supplies must be rated such that if one supply fails, the remaining supplies will be able to operate their portion of the display under fully load conditions (all pixels on at maximum drive current) while at an ambient temperature of +140°F.

Power supplies must operate within a minimum input voltage range of +90 VAC to +135 VAC. Power supply output at an ambient temperature of +140°F must be no less than 65% of its room temperature output. Power supply efficiency must be a minimum of 74%. Power supplies must have a minimum power factor rating of 0.95. Power supplies must be short-circuit protected. Under short-circuit conditions, the DC side of the power supply must be powered down. The power supplies must reset automatically after 5 sections of AC power off. Power supplies must be protected by a minimum overload allowance of 105%. Inputs to power supplies must be fused or circuit breaker protected. A failed power supply must not interfere with the other operating power supplies.

Each sign must be equipped with a power supply. Power supplies for all signs must be the identical such that the same power supply can be used for any signs provided by this project. Fans or other equipment must not be required to provide acceptable temperature levels inside the sign.

The sign controller must be capable of monitoring the operational status ("normal" or "failed") of each individual power supply.

Sign and sign controller signal and power inputs must be protected from electrical spike and transients.

Digital input and output lines from the sign to the control equipment must be protected by optically isolated input and output modules.

The LED circuitry must prevent perceptible flicker over the voltage range specified. The line voltage fluctuations must show no visible effect on the luminous intensity of the indications. Rated voltage for all measurements must be 120 VAC.

If power is lost to a sign, the display must go dark.

The sign must be equipped with an LED intensity control system. The control must support both manual and automatic control. The sign controller must contain a read-write NTCIP object that adjusts the maximum usable intensity threshold.

86-2.32B(7) Controller Cabinet Assembly

86-2.32B(7)(a) General

The Contractor must furnish a fully-equipped controller cabinet assembly as described in this section. The cabinet assembly must include cabinet, cabinet accessories, cabling, and fiber Ethernet switch.

86-2.32B(7)(b) Prequalification Testing Procedures

The Contractor must furnish equipment and products that are on Caltrans' Qualified Products List for applicable products.

86-2.32B(7)(c) Model 330 Controller Cabinets

Each Model 330 controller cabinet must conform to the provisions in Section 86-3.01, "Controller Assemblies," of the Standard Specifications and these special provisions.

Each cabinet must consist of a Housing 1B, a Mounting Cage 1, and the following listed equipment. The equipment must conform to Chapter 6 of the Transportation Electrical Equipment Specifications (TEES).

1. Service panel
2. Power Distribution Assembly
3. Fan assembly with thermostatic control
4. Rack for network switch and fiber optic distribution unit
5. Shelves for LUS and CCTV control units

One pushbutton power switch must be installed in the upper inside corner of the housing for a door. The switch must be open when its corresponding door is open. The switch must be furnished with 2 conductors, each a minimum of 3 feet, coiled for future termination.

Three equipment shelves must be furnished. Each shelf must be constructed of 0.125 inch cold rolled steel or aluminum sheet with a depth of 21 inches and a minimum width of 17 inches. Each shelf must have equally distributed holes or slots throughout the shelf that must provide 40% open area for vertical flow-through ventilation. Each hole or slot must not exceed 0.75 square inches in area. The shelf must be cadmium- or zinc-plated after cutting and drilling.

Each shelf must be attached to the tops of 2 supporting angles with 4 screws. Each angle must extend from the front to the back rails. The front of the shelf must abut the front member of the mounting cage. Each angle must be designed to support a minimum of 50 pounds each. The horizontal side of each angle must be a minimum of 3 inches. Each angle must be vertically adjustable.

One EIA-310-B rack-mount power strip must be installed facing forward on the rear rail of the cabinet rack. Each power strip must have a 3-foot (min.) long power cord, connected to the rear of the strip, and must be plugged into the "Controller Unit" receptacle on the rear of PDA3. Each power strip must have a rating of 15 A (max.), 120 VAC at 60 Hz. Each power strip must be 2" (max.) high by 3" (max.) deep. Each power strip must have 6 (min.) outlets, mounted on the front of the strip, with 1.5-inch (min.) center-

to-center spacing between adjacent outlets. Each power strip must have a front-mounted 15 A circuit breaker and one front-mounted internally-illuminated switch to cut power to all outlets.

86-2.32C Construction

86-2.32C(1) General

Junction boxes, mounted on back side of LUS, are used for power supply and communication wiring between LUS and SCC. Each LED module is connected to the power and communication bus using internal power & communication cable. One side of this cable is connected to the junction box and the other side is appropriately terminated. Exact junction box positions are shown on the mechanical drawing in the document appendix.

All bolts and screws on the LUS are made of stainless steel, A2 quality (SS304). Sign is equipped with pre-mounted aluminum Z profile for mounting on gantry.

Servicing of LUS is possible from front side and each LED module is replaceable individually.

Lane use sign must be installed and tested to conform to these special provisions.

86-2.32C(2) Testing

86-2.32C(2)(a) General

The Contractor must conduct tests required herein that demonstrate that the equipment and the system furnished and installed under this contract function in full compliance with the requirements of the contract documents. Submit test procedures for all tests to the Engineer for approval. Conduct all tests in the presence of the Engineer using approved test procedures. Submit test results to the Engineer using approved test data forms. The Engineer will review the test results for conformance with the requirements of these contract documents. If the equipment or systems fail any part of the test, the Contractor must make all necessary corrections and repeat the test.

Before conducting any testing, the Vendor must submit to the Engineer the testing plans documenting the test procedures. The testing plans must also document the operation and functional requirements to be verified by the tests.

Contractor must furnish and maintain all test equipment for use during testing. The equipment used for testing must be correctly calibrated before use. Upon request by the Engineer, the Contractor must provide documentation to substantiate the calibration status of test equipment.

The Engineer must have the prerogative to witness factory demonstration tests and environmental tests if so desired. The Contractor must notify the Engineer of the time, date and place of the test(s) at least 14 days before the date on which the test is planned. When the Engineer has requested to witness testing, then such tests must be conducted Monday through Friday between 8:00 a.m. and 5:00 p.m., unless otherwise approved by the Engineer. If, in the opinion of the Engineer, any equipment or system fails any part of a test, at the option of the Engineer, the entire test must be repeated. The Contractor must reimburse Engineer for airfare and lodging associated with travel to tests conducted greater than 300 miles from Oakland, CA.

The Contractor must ensure that all equipment to be tested is reader for testing before the arrival of Engineer witnessing the test. Costs for transportation, meals, and lodging for the Engineer and his representatives that are associated with delays in the testing will be deducted from monies due, or to become due, or owed to the Contractor.

Neither the witnessing of tests by the Engineer or his representatives, nor the waiving of the right to do so, will relieve the Contractor of the responsibility to furnish and install the work in accordance with the contract documents. Such actions by the Engineer or his representatives or approval of any test results by them will not be deemed as acceptance of the equipment or systems tested until successful completion of the SAT.

Any Contractor-furnished equipment that fails during testing must be replaced immediately at no additional cost.

86-2.32C(2)(b) Test Procedures and test data Forms

The Contractor must complete and submit approved test data forms containing all of the data to be collected as well as quantitative results for each test, to the Engineer for review and approval. The test data forms will be the basis for rejection or acceptance of the required test. The Contractor must sign all completed test forms. When tests are witnessed by the Engineer, obtain the witnessing Engineer's signature on the test data form.

The test procedures must include the following minimum requirements:

1. A step-by-step outline of the test sequence to be followed, showing a test of every function of the equipment or system to be tested.
2. A description of the expected operation, output and test results.
3. A data form to be used to record all data and quantitative results obtained during the test.
4. A description of any special equipment, setup, manpower, or conditions required for the test.

86-2.32C(2)(c) Factory Acceptance Test (FAT)

The Contractor must perform Factory Acceptance Tests (FATs) on all equipment to verify proper operation of all required functions before shipping to approved storage facility. Contractor must submit all FAT results to the Engineer for review and approval, and must not deliver any equipment until FAT results have been received and approved by the Engineer.

The Contractor must certify to the Engineer that each component system has been thoroughly bench and operationally tested, and that as a controller and sign system, all components are operating in conformance with these Specifications.

86-2.32C(2)(d) Post-Delivery Stand-Alone Testing

Following acceptance and approval of FAT results, Contractor must deliver equipment to approved storage facility within 200 miles of Oakland, CA. Storage facility must be a bonded, secured warehouse approved by BATA. Storage must be at the Contractor's risk and subject to Contractor's insurance coverage.

Contractor must assemble all components as it will be installed per project site and conduct stand-alone testing. Stand-alone test must demonstrate that each sign and controller assembly (including sign panel, power conductors, sign control cable, necessary converter boxes for communication between sign and sign controller, and the sign controller assembly) are operating properly, in compliance with these Specifications. Sign Control Cable must be simulated by use of a 1,000 meter cable.

86-2.32C(2)(e) Installation Testing Support

The Contractor must provide on-site support during stand-alone and subsystem testing by other of all Contractor-furnished equipment. The Contractor must provide the stand-alone and subsystem testing procedures to be conducted by the Installation Contractor and System Integrator. The testing procedure must confirm proper operations of all required sign assembly functions. The Contractor must be on-site during these tests to oversee testing procedures, troubleshoot and diagnose hardware and software failures, implement solutions and corrections, and confirm operational functionality. These tests include the following:

1. Upon notification by MTC, Installation Contractor must conduct a stand-alone test of sign equipment in compliance with previous testing procedures. Following successful test, Installation Contractor must deliver equipment to job site and install equipment.
2. After installation of sign equipment, ATM Installation Contractor must conduct stand-alone system test in compliance with previous testing procedures.

After successful post-installation stand-alone test, System Integrator must conduct subsystem test.

86-2.32C(2)(f) System Acceptance Test (SAT)

The Contractor must provide support as directed by MTC during the System Acceptance Test (to be conducted by the System Integrator). The SAT must be conducted following a 30-day period of operations without major failure of Contractor-furnished equipment following a successful subsystem test. The SAT must demonstrate that the total system (hardware, materials, installation, communications, system operations) is properly operational, free from identified problems, exhibits stable and reliable performance, and complies with the contract documents and functional requirements.

During the SAT, Contractor must:

1. Troubleshoot, diagnose, identify, isolate, and resolve all hardware and firmware problems and inconsistencies. Formulate possible solutions and implement all corrections needed for Contractor-installed equipment.
2. Correct all system documentation errors, omissions, and changes discovered and resulting from the SAT and previous testing.

System acceptance will not be complete until corrected documentation is submitted.

In the event of a failure of a single piece of equipment during the SAT, replace or repair the equipment and restart the 30-day test only for that piece of equipment. If the failure of the single piece of equipment prevents the proper operation of other equipment, all devices affected by the failure will have the test extended by however many days they were out of service.

The following conditions constitute a minor system failure and will result in suspension of the 30-day test:

1. Interference with project operations due to vandalism, traffic accident, power failure, or lightning for which lightning protection devices as specified are no sufficient protection.
2. Failure to complete the objective of any test scenario due to lack of adequate documentation for equipment supplied by the Contractor. Re-test using revised documentation.
3. Intermittent hardware, communication, or operation control malfunctions.
4. After satisfactory remedial action, the 30-day test will be resumed and extended one day for each restart.

The following constitutes a major system failure. Any one of the following condition will result in reinitialization of the SAT from day zero:

1. Failure of any hardware or performance item to meet the operational requirements of these Special Provisions for 72 consecutive hours.
2. Failure of 5% of all field devices or communication equipment within a 14-day period.
3. Failure to correct any problem that adversely impacts the safety of the traveling public, the Engineer, or his representatives within four hours of notification.

Upon successful completion and acceptance of the SAT, the project will advance to the warranty period.

All costs involved in complying with testing sections must be considered included in the contract prices paid for various items and no additional compensation will be allowed therefor.

86-2.32C(3) Converter Boxes

Converter boxes must only be installed at sign assemblies or sign controller assemblies. No intermediate boxes must be allowed outside of the sign assembly and the controller cabinet.

86-2.32D Payment

Full compensation, including all labor, equipment, materials, submittals, testing and warranty for the Lane Use Signs and the associated hardware and software is included in the applicable bid items.

Dist	COUNTY	ROUTE	POST MILES TOTAL PROJECT	SHEET No.	TOTAL SHEETS
04	CC, Mrn	580	5.0/7.8, 0.0/3.3	1	579

STATE OF CALIFORNIA

DEPARTMENT OF TRANSPORTATION

PROJECT PLANS FOR CONSTRUCTION ON

STATE HIGHWAY

IN CONTRA COSTA AND MARIN COUNTIES IN AND NEAR RICHMOND AND SAN RAFAEL FROM CASTRO STREET IN RICHMOND TO SIR FRANCIS DRAKE BOULEVARD IN SAN RAFAEL

TO BE SUPPLEMENTED BY STANDARD PLANS DATED 2010

INDEX OF PLANS

SHEET No.	DESCRIPTION
1	TITLE AND LOCATION MAP
2-15	TYPICAL CROSS SECTIONS
16	KEY MAP AND LINE INDEX
17	PROJECT CONTROL
18-41	LAYOUTS
42	PROFILES
43-45	PROFILES AND SUPERELEVATION DIAGRAMS
46-84	CONSTRUCTION DETAILS
85-95	TEMPORARY WATER POLLUTION CONTROL PLANS AND QUANTITIES
96-123	DRAINAGE PLANS, PROFILES, DETAILS AND QUANTITIES
124-147	UTILITY PLANS 147A, 147B, 147C 1
148	CONSTRUCTION AREA SIGNS
149-158	MOTORIST INFORMATION PLAN AND QUANTITIES
159-188	STAGE CONSTRUCTION\TRAFFIC HANDLING\DETOURS PLANS, QUANTITIES AND DETAILS
189-220	PAVEMENT DELINEATION PLANS, DETAILS AND QUANTITIES
221-256	SIGN PLAN, DETAILS AND QUANTITIES
257-260	SUMMARY OF QUANTITIES
261	RETAINING WALL No. 8
262-269	IRRIGATION SCHEDULE, PLAN, DETAILS AND QUANTITIES
270-273	PLANTING LIST, PLANS AND QUANTITIES
274-286	EROSION CONTROL LEGEND, PLANS, DETAILS AND QUANTITIES
287-377	ELECTRICAL PLANS
378-386	SPECIAL ELECTRICAL STRUCTURES
387-506	REVISED STANDARD PLANS
	STRUCTURE PLANS
507-508	RETAINING WALL KEY MAP, LINE INDEX AND GENERAL NOTES
509	RETAINING WALL No. 1, Br No. 27E0068
510	RETAINING WALL No. 2, Br No. 27E0069
511	RETAINING WALL No. 3, Br No. 27E0070
512-519	RETAINING WALL No. 4, Br No. 28E0215
520-525	RETAINING WALL No. 5, Br No. 28E0216
526-529	RETAINING WALL No. 6, Br No. 27E0071
530-535	RETAINING WALL No. 7, Br No. 28E0217
536-539	RETAINING WALL DETAILS
540-551	SCOFIELD AVENUE UNDERCROSSING (MODIFY), Br No. 28-140R
552-555	SAN QUENTIN STREET UNDERCROSSING (MODIFY), Br No. 27-0070
556-559	UTILITY CULVERT EXTENSION
560-567	RICHMOND-SAN RAFAEL BRIDGE (MODIFY), Br No. 28-0100
568-571	LOG OF TEST BORINGS
572-579	RETAINING WALL DETAILS

THE STANDARD PLANS LIST APPLICABLE TO THIS CONTRACT IS INCLUDED IN THE NOTICE TO BIDDERS AND SPECIAL PROVISIONS BOOK.

LOCATION MAP

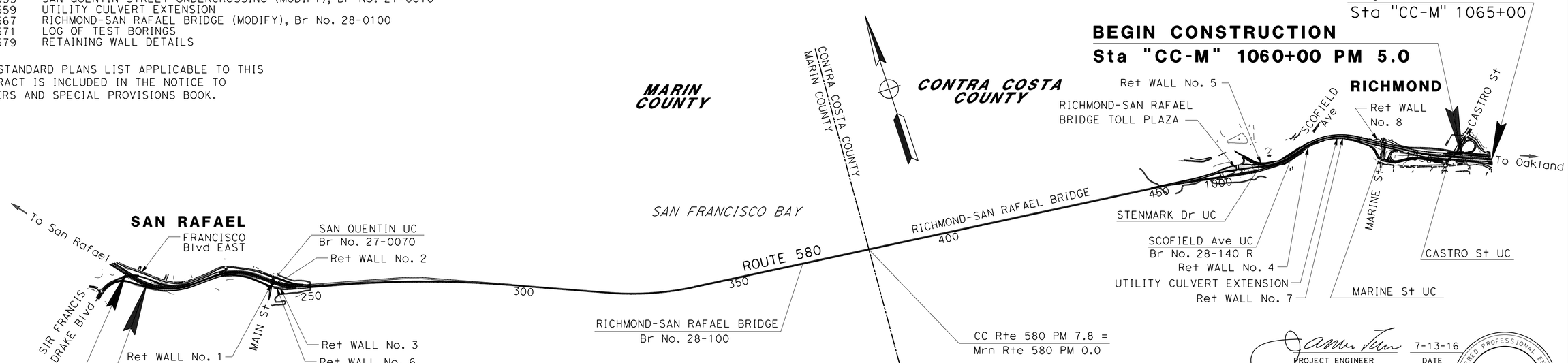

1 REPLACED PER ADDENDUM No. 1 DATED SEPTEMBER 23, 2016

NO SCALE

THE CONTRACTOR SHALL POSSESS THE CLASS (OR CLASSES) OF LICENSE AS SPECIFIED IN THE "NOTICE TO BIDDERS."

BATA-013

7-13-16
PROJECT ENGINEER REGISTERED CIVIL ENGINEER — DATE

REGISTERED PROFESSIONAL ENGINEER — JAMES T. PUN No. C35305 Exp. 9-30-17 CIVIL — STATE OF CALIFORNIA

July 26, 2016
PLANS APPROVAL DATE

THE STATE OF CALIFORNIA OR ITS OFFICERS OR AGENTS SHALL NOT BE RESPONSIBLE FOR THE ACCURACY OR COMPLETENESS OF SCANNED COPIES OF THIS PLAN SHEET.

HNTB CORPORATION
1111 BROADWAY, 9TH FL
OAKLAND, CA 94607

BAY AREA TOLL AUTHORITY
375 BEALE STREET, SUITE 800
SAN FRANCISCO, CA 94105

CONTRACT No.	04-2J6804
PROJECT ID	0414000552

APPROVED AS TO IMPACT ON STATE FACILITIES AND CONFORMANCE WITH APPLICABLE STATE STANDARDS AND PRACTICES AND THAT TECHNICAL OVERSIGHT WAS PERFORMED.

CONSULTANT DESIGN MANAGER	CALTRANS DESIGN OVERSIGHT APPROVAL	REGISTRATION No.	LICENSE Exp DATE	DATE SIGNED
CHADI CHAZBEK	VINCE BONNER	C48833	9-30-16	8-17-16

LAST REVISION 07-13-16 DATE PLOTTED => 9/23/2016 TIME PLOTTED => 9:58:31 AM

Dist	COUNTY	ROUTE	POST MILES TOTAL PROJECT	SHEET No.	TOTAL SHEETS
04	CC, Mrn	580	5.0/7.8, 0.0/3.3	2	579

REGISTERED CIVIL ENGINEER 7-13-16 DATE

7-29-16
PLANS APPROVAL DATE

REGISTERED PROFESSIONAL ENGINEER ANTHONY E. SILVA No. C75053 Exp. 12-31-17 CIVIL STATE OF CALIFORNIA

THE STATE OF CALIFORNIA OR ITS OFFICERS OR AGENTS SHALL NOT BE RESPONSIBLE FOR THE ACCURACY OR COMPLETENESS OF SCANNED COPIES OF THIS PLAN SHEET.

HNTB CORPORATION
1111 BROADWAY
9TH FLOOR
OAKLAND, CA 94607

BAY AREA TOLL AUTHORITY
375 BEALE STREET
SUITE 800
SAN FRANCISCO, CA 94105

NOTES:

1. DIMENSIONS OF THE PAVEMENT STRUCTURES (STRUCTURAL SECTION) ARE SUBJECT TO TOLERANCES SPECIFIED IN THE STANDARD SPECIFICATIONS.
2. SUPERELEVATIONS ARE SHOWN ON THE SUPERELEVATION DIAGRAMS.
3. PLACE 0.33′(Min) HMA (TYPE A) UNDER DIKES & CONCRETE BARRIERS, UNLESS OTHERWISE NOTED ON PLANS.
4. FOR LOCATIONS & LIMITS OF HMA DIKES & CURBS, SEE LAYOUT, CONSTRUCTION DETAIL & SUMMARY OF QUANTITIES SHEETS.
5. FOR HMA OVERLAY CONFORM DETAILS, SEE CONSTRUCTION DETAILS.
6. FOR LOCATIONS, LIMITS, & DETAILS OF RETAINING WALLS No. 1 THROUGH 7, SEE RETAINING WALL PLANS.
7. FOR LOCATIONS OF DITCH, GUTTER, & EDGE DRAINS, SEE DRAINAGE PLANS.
8. FOR CONCRETE BARRIER TYPE 60C (Mod), SEE BRIDGE PLANS. FOR CONCRETE BARRIER TYPE 60SC (Mod), SEE CONSTRUCTION DETAILS.
9. SEE BRIDGE PLAN "SCOFIELD AVENUE UC - BARRIER DETAIL No 2" FOR BICYCLE RAILING MOUNTED ON CONCRETE BARRIER (TYPE 732 Mod)
10. TEXTURED PAVING TO BE BROOM FINISHED ON PLAIN CONCRETE SURFACE. BROOM FINISH TO BE 90 DEGREES TO THE MAINLINE.
11. SEE CONSTRUCTION DETAIL FOR 6" SHOULDER RUMBLE STRIP
12. FOR HANDLING OF SOILS CONTAINING ADL, SEE SPECIFICATIONS.
13. VERTICAL ESA - NO PROJECT ACTIVITIES 3′ BELOW OG. FOR VERTICAL ESA LOCATION AND LIMITS, SEE SHEET C-1.

ABBREVIATIONS:

SW	SIDEWALK
ADL	AERIALLY DEPOSITED LEAD

LEGEND:

ROADWAY AREA CONTAINING ADL

PAVEMENT CLIMATE REGION:

NORTH COAST

PROPOSED PAVEMENT STRUCTURAL SECTIONS:

1. 0.25′ HMA (TYPE A)
   0.35′ AB (CLASS 2)
   0.45′ AS (CLASS 2)
2. 0.60′ HMA (TYPE A)
3. 0.15′ RHMA-G
   1.40′ HMA (TYPE A)
   0.35′ AB (CLASS 2)
4. 0.20′ RHMA-G
   1.40′ HMA (TYPE A)
5. 0.15′ RHMA-G
   0.65′ HMA (TYPE A)
   0.35′ LCB
   1.30′ AS (CLASS 2)
6. 0.15′ RHMA-G
   0.40′ HMA (TYPE A)
   0.75′ AB (CLASS 2)
   1.10′ AS (CLASS 2)
7. 0.15′ RHMA-G
   0.40′ HMA (TYPE A)
   0.85′ AB (CLASS 2)
   1.15′ AS (CLASS 2)
8. 0.15′ RHMA-G
   0.35′ HMA (TYPE A)
   0.75′ AB (CLASS 2)
   1.00′ AS (CLASS 2)
9. 0.10′ COLD PLANE
   0.10′ RHMA-G
10. 0.15′ COLD PLANE
    0.15′ RHMA-G
11. 0.35′ PCC (TEXTURED PAVING)
    0.50′ AB (CLASS 2)
    (SEE NOTE 10)
12. 0.15′ RHMA-G
    0.30′ HMA (TYPE A)
    0.25′ ATPB
    0.10′ HMA (TYPE A)
    0.35′ LCB
    0.65′ AS (CLASS 2)
13. 0.15′ RHMA-G
    0.30′ HMA (TYPE A)
    0.25′ ATPB
    0.35′ LCB
    0.65′ AS (CLASS 2)
14. 0.15′ RHMA-G
    0.20′ HMA (TYPE A)
    0.50′ AB (CLASS 2)
15. 0.35′ PCC
    0.50′ AB (CLASS 2)
16. 0.10′ COLD PLANE
    Var HMA (TYPE A) (CROSS SLOPE CORRECTION), OR (ADA COMPLIANCE)
17. 0.20′ RHMA-G
    1.00′ HMA (TYPE A)
18. 0.15′ RHMA-G
    0.30′ HMA (TYPE A)
    0.75′ AB (CLASS 2)
    0.95′ AS (CLASS 2)
19. 0.35′ PCC
    0.15′ AB (CLASS 2)
20. 0.20′ RHMA-G
    0.95′ HMA (TYPE A)
21. 0.10′ COLD PLANE
    Var RHMA-G

DESIGN DESIGNATION

ADT (2020)	77,000	D	61%
ADT (2040)	91,000	T	7%
DHV	7,700	V	60 mph
ESAL	17,000,000	TI_{20}	12.5

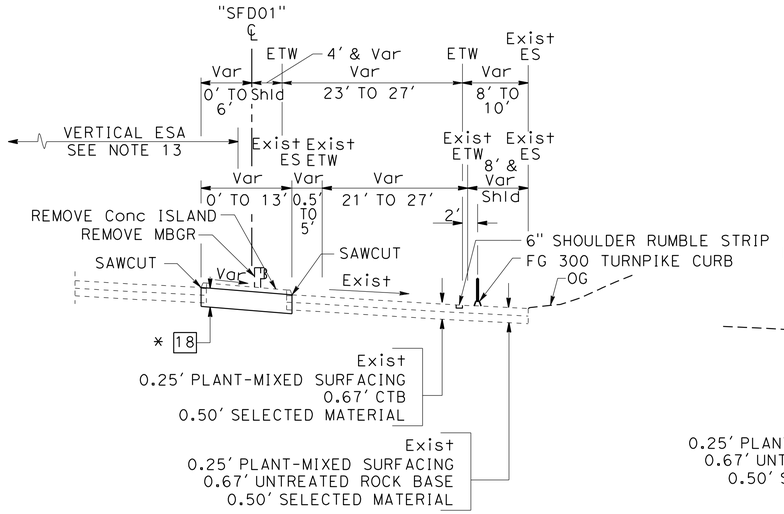

SIR FRANCIS DRAKE Blvd ON-RAMP

"SFD01" 200+06 TO "SFD01" 202+70

* PAVEMENT Beg AT "SFD01" 200+29

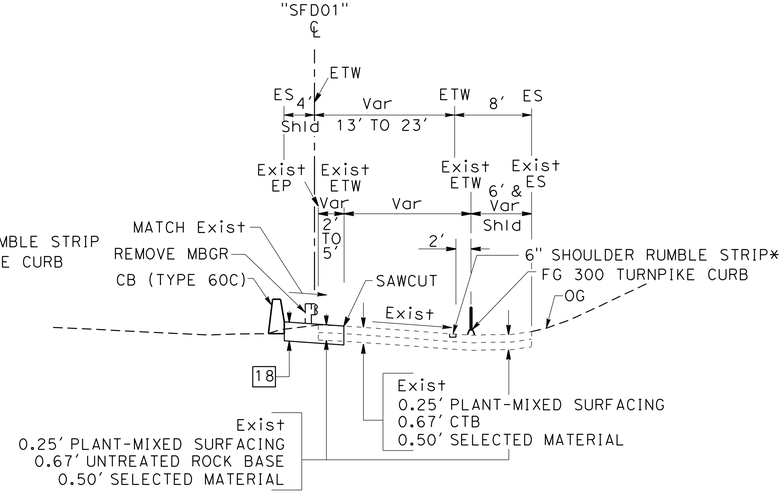

SIR FRANCIS DRAKE Blvd ON-RAMP

"SFD01" 202+70 TO "SFD01" 208+17

* END 6" SHOULDER RUMBLE STRIP AND Beg SHOULDER RUMBLE STRIP AT "SFD01" 207+81

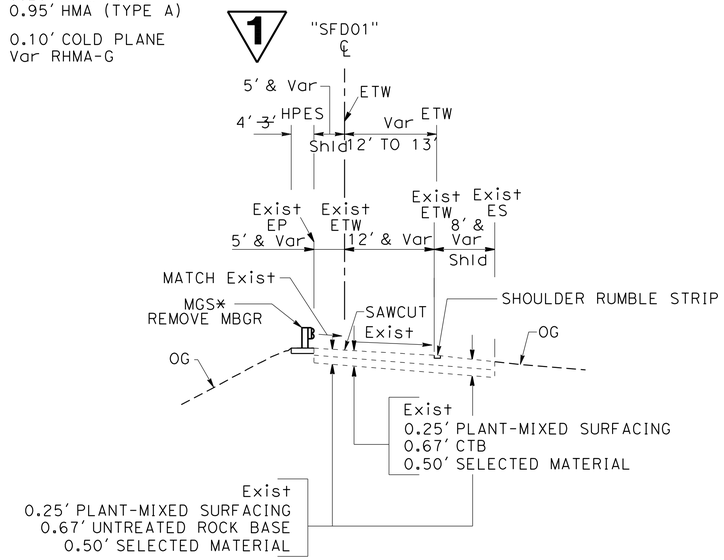

SIR FRANCIS DRAKE Blvd ON-RAMP

"SFD01" 208+17 TO "SFD01" 212+18

* MGS ENDS AT "SFD01" 210+24

1 **REPLACED PER ADDENDUM No. 1 DATED SEPTEMBER 23, 2016**

TYPICAL CROSS SECTIONS

NO SCALE

X-1

STATE OF CALIFORNIA - DEPARTMENT OF TRANSPORTATION
Caltrans®

CONSULTANT FUNCTIONAL SUPERVISOR: JAMES PUN
CALCULATED-DESIGNED BY: RYAN LITTELL
CHECKED BY: JAMES PUN
REVISED BY: RdL
DATE REVISED: 7-13-16

LAST REVISION: 00-00-00
DATE PLOTTED => 9/23/2016
TIME PLOTTED => 10:19:34 AM

Dist	COUNTY	ROUTE	POST MILES TOTAL PROJECT	SHEET No.	TOTAL SHEETS
04	CC, Mrn	580	5.0/7.8, 0.0/3.3	10	579

REGISTERED CIVIL ENGINEER 7-13-16 DATE

7-29-16
PLANS APPROVAL DATE

REGISTERED PROFESSIONAL ENGINEER ANTHONY E. SILVA No. C75053 Exp. 12-31-17 CIVIL STATE OF CALIFORNIA

THE STATE OF CALIFORNIA OR ITS OFFICERS OR AGENTS SHALL NOT BE RESPONSIBLE FOR THE ACCURACY OR COMPLETENESS OF SCANNED COPIES OF THIS PLAN SHEET.

HNTB CORPORATION
1111 BROADWAY
9TH FLOOR
OAKLAND, CA 94607

BAY AREA TOLL AUTHORITY
375 BEALE STREET
SUITE 800
SAN FRANCISCO, CA 94105

NOTE:

DIMENSIONS OF THE PAVEMENT STRUCTURES (STRUCTURAL SECTION) ARE SUBJECT TO TOLERANCES SPECIFIED IN THE STANDARD SPECIFICATIONS.

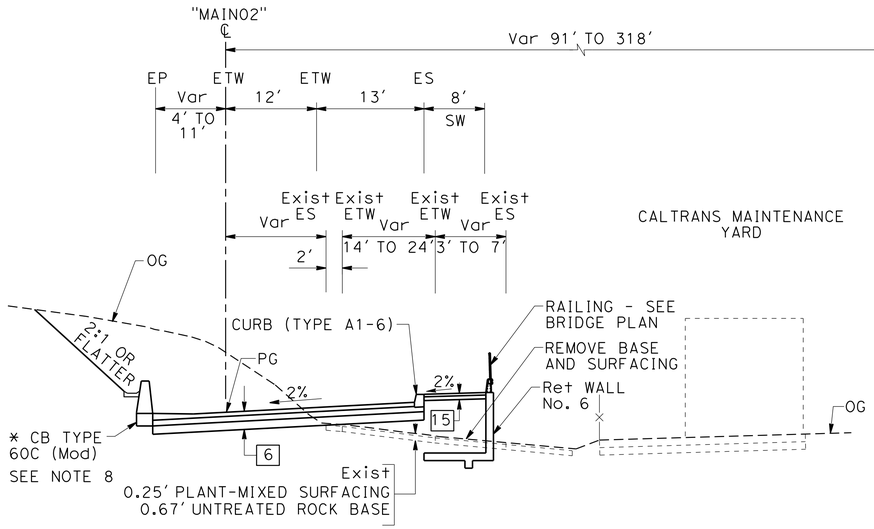

MAIN St ON-RAMP
"MAIN02" 242+02 TO "MAIN02" 242+64
* CB TYPE 60C (Mod) Begs AT "MAIN02" 242+10

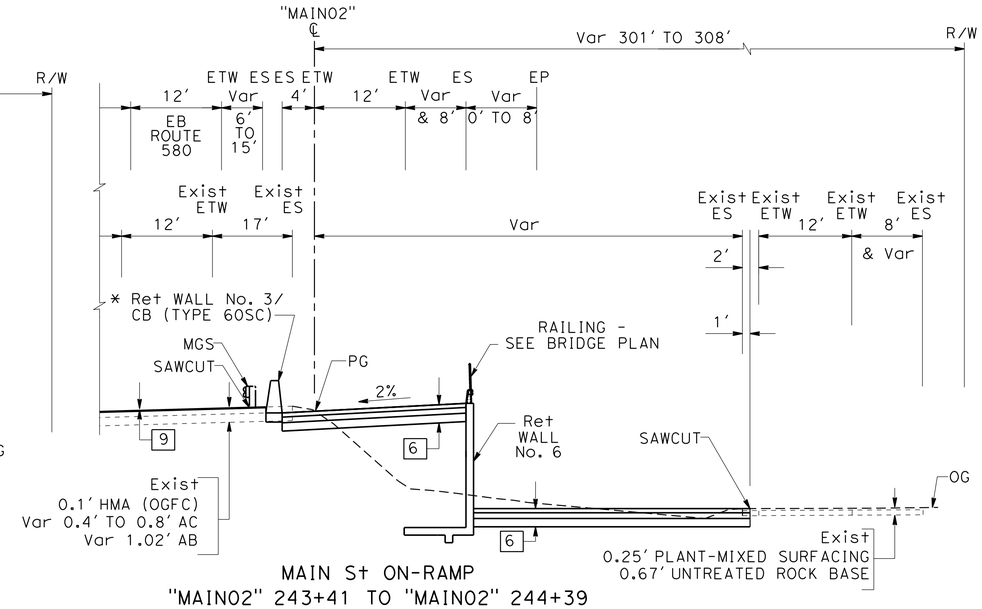

MAIN St ON-RAMP
"MAIN02" 243+41 TO "MAIN02" 244+39
* Ret WALL No. 3 ENDS AT "MAIN02" 243+96.91
SEE SHEET X-4 FOR CONTINUATION

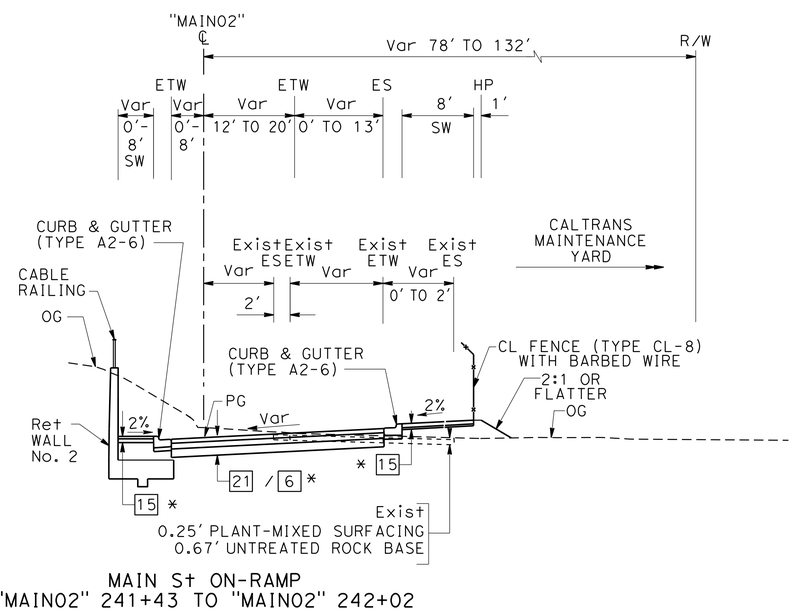

MAIN St ON-RAMP
"MAIN02" 241+43 TO "MAIN02" 242+02
* SEE CONSTRUCTION DETAILS FOR LIMITS

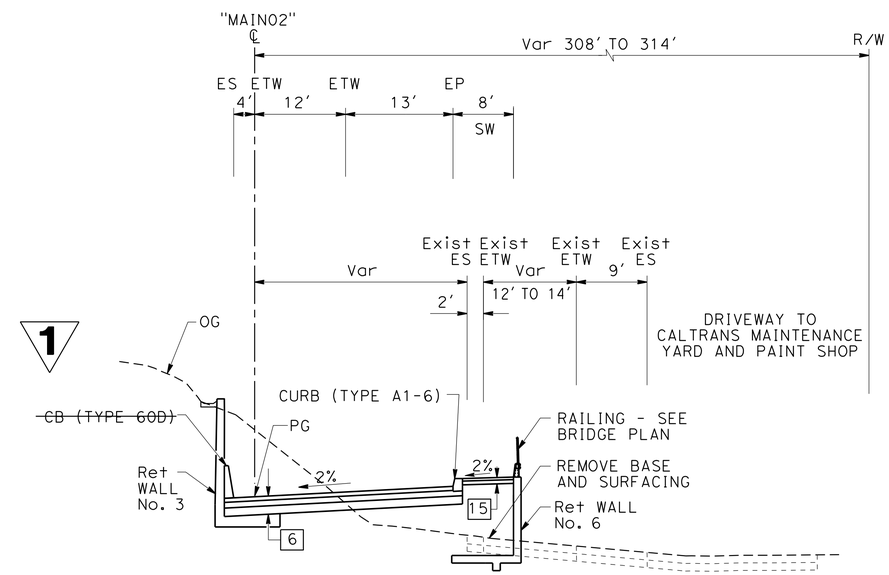

MAIN St ON-RAMP
"MAIN02" 242+64 TO "MAIN02" 243+41

1 REPLACED PER ADDENDUM No. 1 DATED SEPTEMBER 23, 2016

TYPICAL CROSS SECTIONS

NO SCALE

X-9

REVISED BY	DATE REVISED
RdL	7-13-16

CALCULATED-DESIGNED BY: RYAN LITTELL
CHECKED BY: JAMES PUN
CONSULTANT FUNCTIONAL SUPERVISOR: JAMES PUN

STATE OF CALIFORNIA - DEPARTMENT OF TRANSPORTATION
Caltrans

LAST REVISION 00-00-00
DATE PLOTTED => 9/23/2016
TIME PLOTTED => 10:19:34 AM

Dist	COUNTY	ROUTE	POST MILES TOTAL PROJECT	SHEET No.	TOTAL SHEETS
04	CC, Mrn	580	5.0/7.8, 0.0/3.3	12	579

REGISTERED CIVIL ENGINEER 7-13-16 DATE

7-29-16
PLANS APPROVAL DATE

REGISTERED PROFESSIONAL ENGINEER ANTHONY E. SILVA No. C75053 Exp. 12-31-17 CIVIL STATE OF CALIFORNIA

THE STATE OF CALIFORNIA OR ITS OFFICERS OR AGENTS SHALL NOT BE RESPONSIBLE FOR THE ACCURACY OR COMPLETENESS OF SCANNED COPIES OF THIS PLAN SHEET.

HNTB CORPORATION
1111 BROADWAY
9TH FLOOR
OAKLAND, CA 94607

BAY AREA TOLL AUTHORITY
375 BEALE STREET
SUITE 800
SAN FRANCISCO, CA 94105

NOTE:

1. DIMENSIONS OF THE PAVEMENT STRUCTURES (STRUCTURAL SECTION) ARE SUBJECT TO TOLERANCES SPECIFIED IN THE STANDARD SPECIFICATIONS.
2. SEE DETAIL A, SHEET E-38 FOR ELECTRICAL EQUIPMENT TO BE RELOCATED IN THIS AREA.

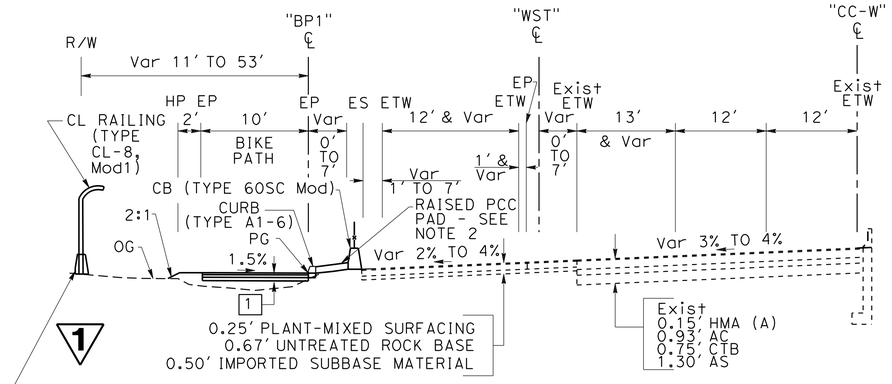

STENMARK Dr OFF-RAMP
"WST" 1012+94 TO "WST" 1014+45
"BP1" 1013+53 TO "BP1" 1014+91
"CC-W" 1012+05 TO "CC-W" 1014+05

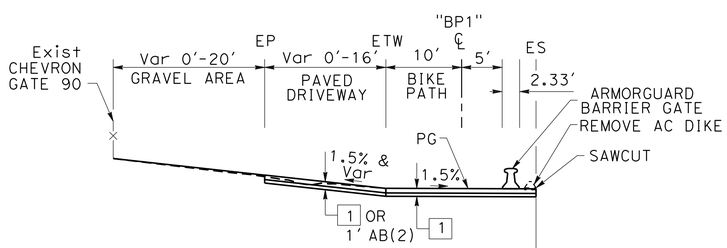

"BP1" 1011+46 TO "BP1" 1013+53

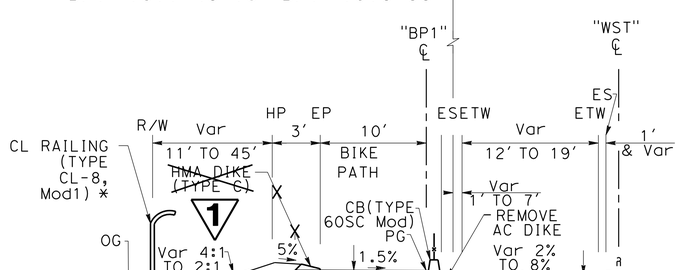

STENMARK Dr OFF-RAMP
"WST" 1010+76 TO "WST" 1012+94
"BP1" 1011+32 TO "BP1" 1013+39
* Begs AT "BP1" 1011+79

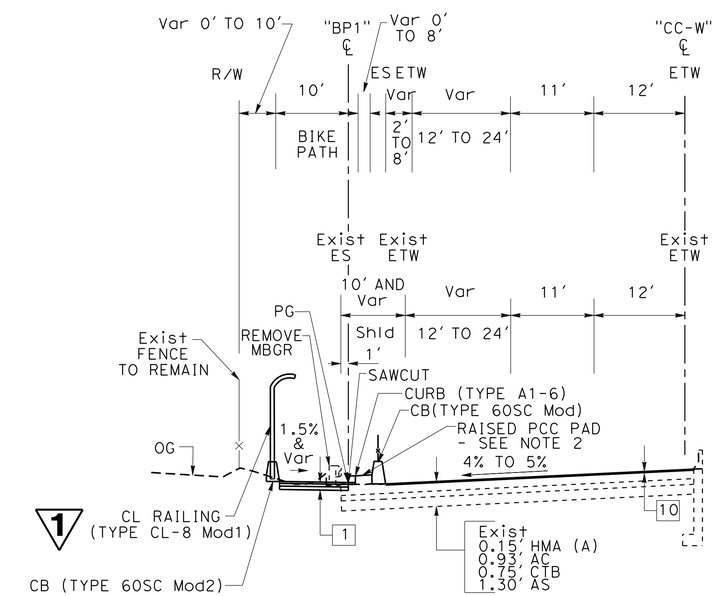

ROUTE I-580

WESTBOUND

"CC-W" 1014+05 TO "CC-W" 1015+83
"BP1" 1014+91 TO "BP1" 1016+53
* CURB ENDS AT "BP1" 1015+43

1 **REPLACED PER ADDENDUM No. 1 DATED SEPTEMBER 23, 2016**

TYPICAL CROSS SECTIONS

NO SCALE

X-11

CALCULATED-DESIGNED BY	RYAN LITTELL
CHECKED BY	JAMES PUN
CONSULTANT FUNCTIONAL SUPERVISOR	JAMES PUN
REVISED BY	RdL
DATE REVISED	7-13-16

STATE OF CALIFORNIA - DEPARTMENT OF TRANSPORTATION

Caltrans

LAST REVISION 00-00-00 | DATE PLOTTED => 9/23/2016 | TIME PLOTTED => 10:19:35 AM

Dist	COUNTY	ROUTE	POST MILES TOTAL PROJECT	SHEET No.	TOTAL SHEETS
04	CC, Mrn	580	5.0/7.8, 0.0/3.3	14	579

REGISTERED CIVIL ENGINEER 7-13-16 DATE

7-29-16
PLANS APPROVAL DATE

REGISTERED PROFESSIONAL ENGINEER ANTHONY E. SILVA No. C75053 Exp. 12-31-17 CIVIL STATE OF CALIFORNIA

THE STATE OF CALIFORNIA OR ITS OFFICERS OR AGENTS SHALL NOT BE RESPONSIBLE FOR THE ACCURACY OR COMPLETENESS OF SCANNED COPIES OF THIS PLAN SHEET.

HNTB CORPORATION
1111 BROADWAY
9TH FLOOR
OAKLAND, CA 94607

BAY AREA TOLL AUTHORITY
375 BEALE STREET
SUITE 800
SAN FRANCISCO, CA 94105

1

NOTE:

DIMENSIONS OF THE PAVEMENT STRUCTURES (STRUCTURAL SECTION) ARE SUBJECT TO TOLERANCES SPECIFIED IN THE STANDARD SPECIFICATIONS.

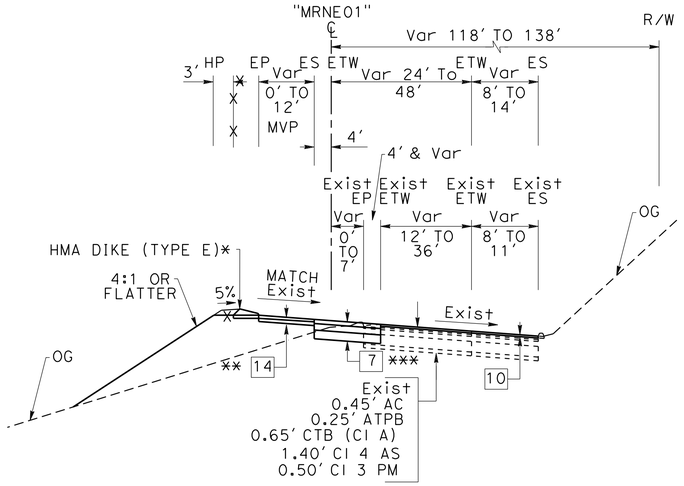

MARINE St OFF-RAMP
"MRNE01" 1040+26 TO "MRNE01" 1042+42
* HMA DIKE Beg AT "MRNE01" 1040+72
** END AT "MRNE01" 1041+11
*** END AT "MRNE01" 1041+59

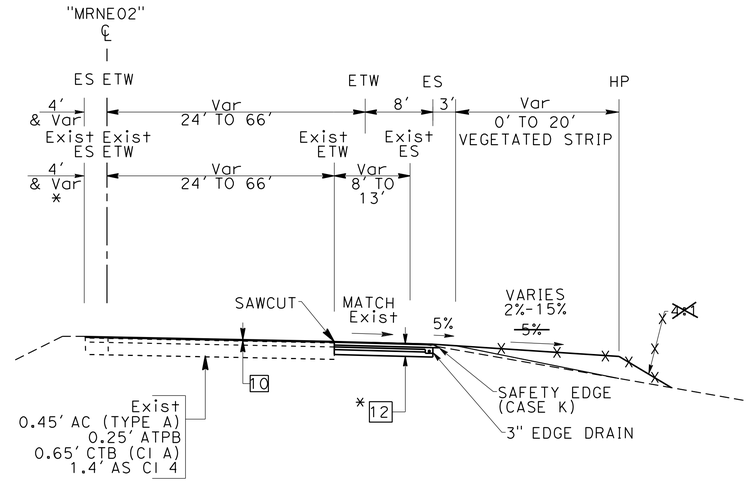

MARINE St ON-RAMP
"MRNE02" 1043+58 TO "MRNE02" 1045+92
* END AT "MRNE02" 1044+91

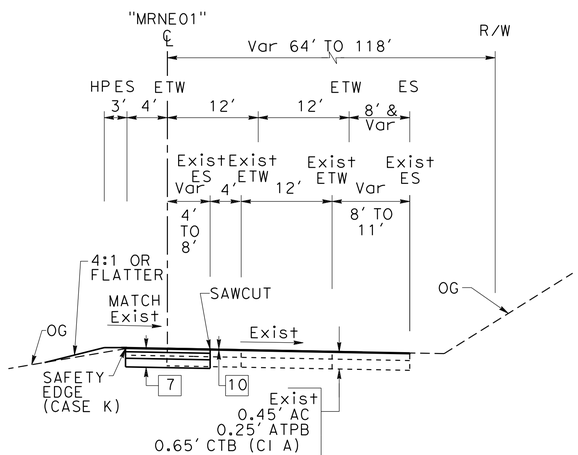

MARINE St OFF-RAMP
"MRNE01" 1038+02 TO "MRNE01" 1040+26

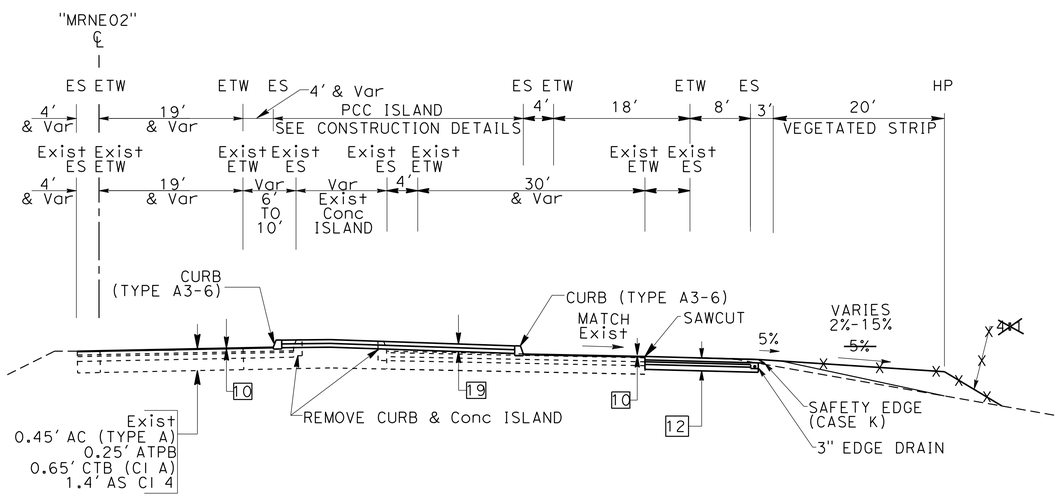

MARINE St ON-RAMP
"MRNE02" 1042+85 TO "MRNE02" 1043+58

TYPICAL CROSS SECTIONS

NO SCALE

1 **REPLACED PER ADDENDUM No. 1 DATED SEPTEMBER 23, 2016**

X-13

REVISED BY	DATE REVISED
RdL	7-13-16

RYAN LITTELL — CALCULATED-DESIGNED BY
JAMES PUN — CHECKED BY
JAMES PUN — CONSULTANT FUNCTIONAL SUPERVISOR

STATE OF CALIFORNIA - DEPARTMENT OF TRANSPORTATION
Caltrans

LAST REVISION 00-00-00 | DATE PLOTTED => 9/23/2016 | TIME PLOTTED => 10:19:36 AM

Dist	COUNTY	ROUTE	POST MILES TOTAL PROJECT	SHEET No.	TOTAL SHEETS
04	CC, Mrn	580	5.0/7.8, 0.0/3.3	18	579

REGISTERED CIVIL ENGINEER 7-13-16 DATE

7-29-16
PLANS APPROVAL DATE

REGISTERED PROFESSIONAL ENGINEER ANTHONY E. SILVA No. C75053 Exp. 12-31-17 CIVIL STATE OF CALIFORNIA

THE STATE OF CALIFORNIA OR ITS OFFICERS OR AGENTS SHALL NOT BE RESPONSIBLE FOR THE ACCURACY OR COMPLETENESS OF SCANNED COPIES OF THIS PLAN SHEET.

HNTB CORPORATION
1111 BROADWAY
9TH FLOOR
OAKLAND, CA 94607

BAY AREA TOLL AUTHORITY
375 BEALE STREET
SUITE 800
SAN FRANCISCO, CA 94105

NOTES:

1. FOR ACCURATE RIGHT OF WAY DATA, CONTACT RIGHT OF WAY ENGINEERING AT THE DISTRICT OFFICE.
2. FOR RETAINING WALL No. 1 THROUGH No. 7 DETAILS, SEE RETAINING WALL PLANS.
3. FOR HORIZONTAL DATUM INFORMATION, SEE SHEET PC-1.
4. PROTECT EXISTING IRRIGATION SYSTEMS; REPAIR IF DAMAGED, SEE SHEET IR-1.
5. FOR SAFETY EDGE LIMITS, SEE TYPICAL SECTIONS.
6. FOR 6" SHOULDER RUMBLE STRIP, SEE SHEET C-37.
7. FOR TYPE 60P CONCRETE BARRIER, SEE SHEET C-28.
8. FOR HANDLING OF SOIL CONTAINING ADL, SEE SPECIFICATIONS.

LEGEND AND ABBREVIATIONS:

- COLD PLANE & OVERLAY
- REMOVE SIDEWALK/ RAISED ISLAND
- REMOVE BASE AND SURFACING
- SOILS CONTAINING ADL
- REMOVE Conc ISLAND
- ROCK BLANKET
- HMA OVERLAY (CROSS-SLOPE CORRECTION) OR (ADA COMPLIANCE)
- TEXTURED PAVING
- POLYESTER OVERLAY (SEE BRIDGE PLANS)
- 1' CLASS 2 AB
- IRRIGATION CONDUIT
- ESA — LIMITS OF ESA
- TFESA — TEMPORARY FENCE (TYPE ESA)
- (1) CURVE DATA NUMBER
- [1] PAVEMENT STRUCTURAL SECTION NUMBER (SEE SHEET X-1)
- FG 300 TURNPIKE GRADE CURB SYSTEM
- PEDESTRIAN BARRICADE (TYPE I)
- ADL AERIALLY DEPOSITED LEAD
- Veg VEGETATION
- Ctrl CONTROL
- REMOVE TREE (4" OR GREATER)
- AVAILABLE CONTRACTOR LAY-DOWN AREA

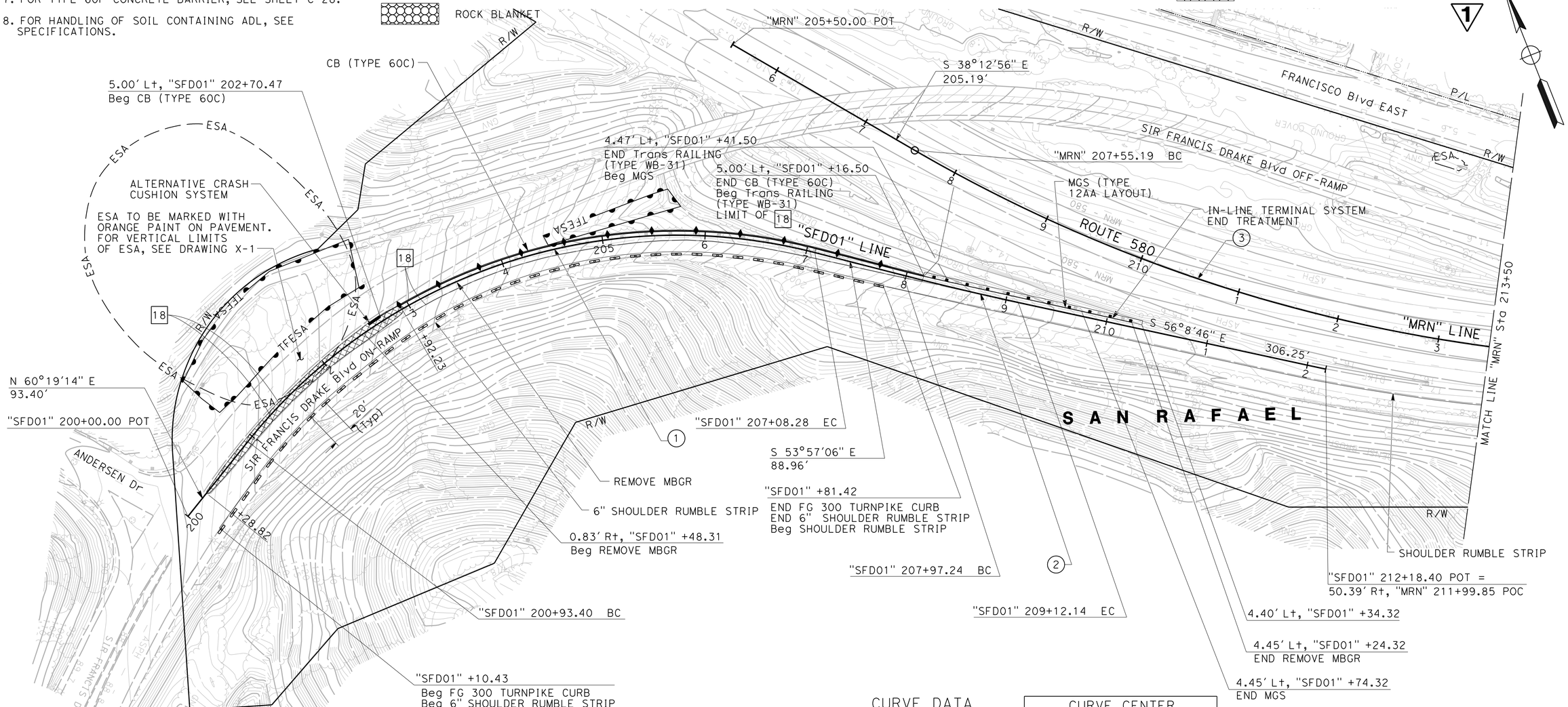

CURVE DATA

No.	R	Δ	T	L	CURVE CENTER N	CURVE CENTER E
1	536'	65°43'40"	346.28'	614.88'	2172659.776	5987147.501
2	3000'	2°11'40"	57.46'	114.91'	2175466.353	5989300.250
3	1510'	54°28'57"	777.41'	1435.86'	2174083.936	5988776.395

1 **REPLACED PER ADDENDUM No. 1 DATED SEPTEMBER 23, 2016**

LAYOUT

SCALE: 1" = 50'

L-1

REVISED BY	DATE REVISED
RdL	7-13-16

CALCULATED-DESIGNED BY: QIANWEN DENG
CHECKED BY: ANTHONY SILVA
CONSULTANT FUNCTIONAL SUPERVISOR: JAMES PUN

STATE OF CALIFORNIA - DEPARTMENT OF TRANSPORTATION
Caltrans

LAST REVISION 00-00-00 | DATE PLOTTED => 9/23/2016 | TIME PLOTTED => 10:19:37 AM

Dist	COUNTY	ROUTE	POST MILES TOTAL PROJECT	SHEET No.	TOTAL SHEETS
04	CC, Mrn	580	5.0/7.8, 0.0/3.3	19	579

REGISTERED CIVIL ENGINEER 7-13-16 DATE

7-29-16
PLANS APPROVAL DATE

REGISTERED PROFESSIONAL ENGINEER ANTHONY E. SILVA No. C75053 Exp. 12-31-17 CIVIL STATE OF CALIFORNIA

THE STATE OF CALIFORNIA OR ITS OFFICERS OR AGENTS SHALL NOT BE RESPONSIBLE FOR THE ACCURACY OR COMPLETENESS OF SCANNED COPIES OF THIS PLAN SHEET.

HNTB CORPORATION
1111 BROADWAY
9TH FLOOR
OAKLAND, CA 94607

BAY AREA TOLL AUTHORITY
375 BEALE STREET
SUITE 800
SAN FRANCISCO, CA 94105

NOTE:

FOR ACCURATE RIGHT OF WAY DATA, CONTACT RIGHT OF WAY ENGINEERING AT THE DISTRICT OFFICE.

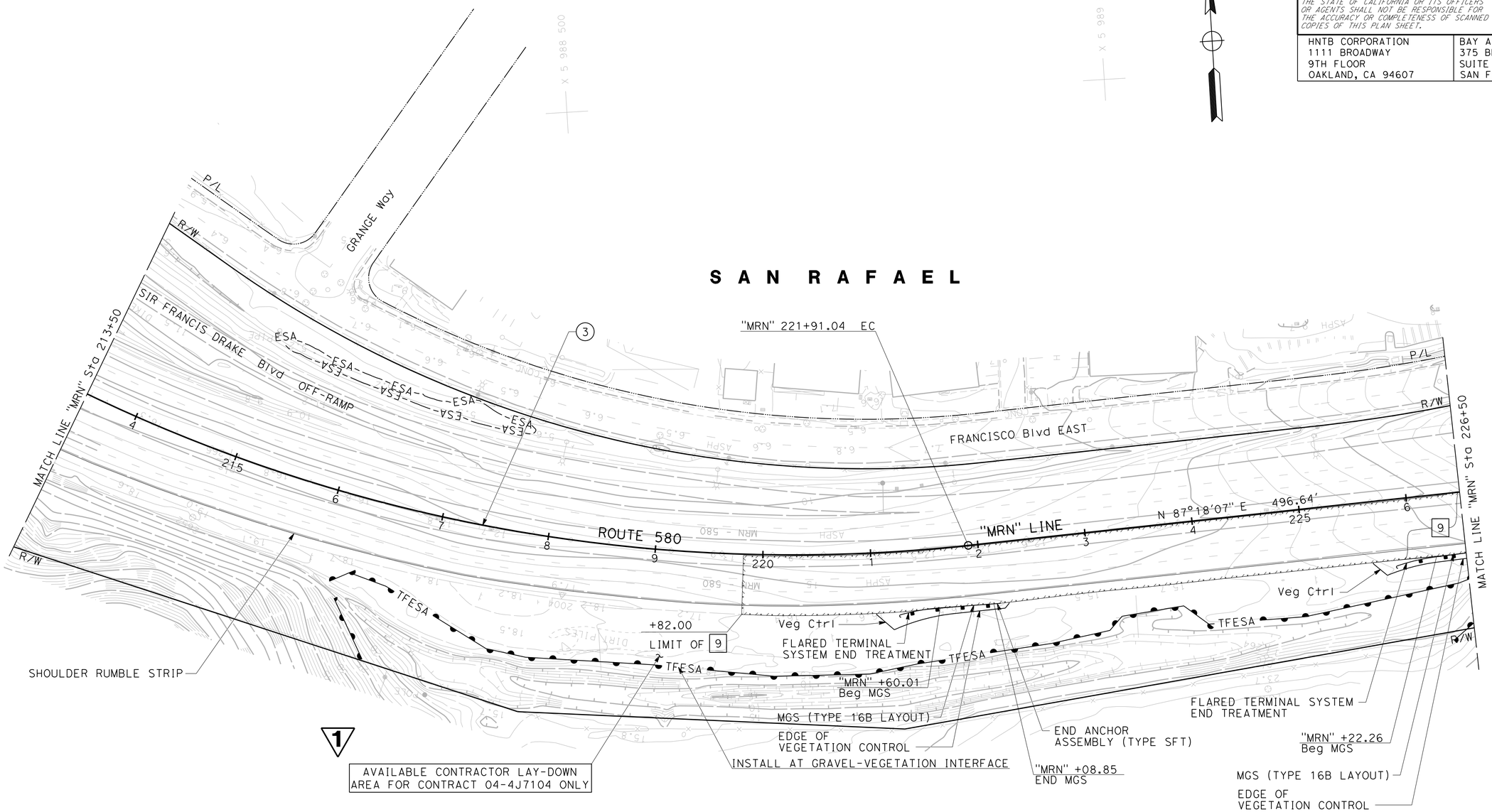

CURVE DATA

No.	R	Δ	T	L	CURVE CENTER N	CURVE CENTER E
3	1510′	54°28′57"	777.41′	777.41′	2174083.936	5988776.395

FOR NOTES, ABBREVIATIONS AND LEGEND, SEE SHEET L-1

1 REPLACED PER ADDENDUM No. 1 DATED SEPTEMBER 23, 2016

LAYOUT

SCALE: 1" = 50′

L-2

STATE OF CALIFORNIA - DEPARTMENT OF TRANSPORTATION
Caltrans
CONSULTANT FUNCTIONAL SUPERVISOR: JAMES PUN
CALCULATED-DESIGNED BY: QIANWEN DENG
CHECKED BY: ANTHONY SILVA
REVISED BY: RdL
DATE REVISED: 7-13-16

LAST REVISION 00-00-00
DATE PLOTTED => 9/23/2016
TIME PLOTTED => 10:19:39 AM

Dist	COUNTY	ROUTE	POST MILES TOTAL PROJECT	SHEET No.	TOTAL SHEETS
04	CC, Mrn	580	5.0/7.8, 0.0/3.3	20	579

REGISTERED CIVIL ENGINEER 7-13-16 DATE

7-29-16
PLANS APPROVAL DATE

REGISTERED PROFESSIONAL ENGINEER ANTHONY E. SILVA No. C75053 Exp. 12-31-17 CIVIL STATE OF CALIFORNIA

THE STATE OF CALIFORNIA OR ITS OFFICERS OR AGENTS SHALL NOT BE RESPONSIBLE FOR THE ACCURACY OR COMPLETENESS OF SCANNED COPIES OF THIS PLAN SHEET.

HNTB CORPORATION
1111 BROADWAY
9TH FLOOR
OAKLAND, CA 94607

BAY AREA TOLL AUTHORITY
375 BEALE STREET
SUITE 800
SAN FRANCISCO, CA 94105

NOTE:

FOR ACCURATE RIGHT OF WAY DATA, CONTACT RIGHT OF WAY ENGINEERING AT THE DISTRICT OFFICE.

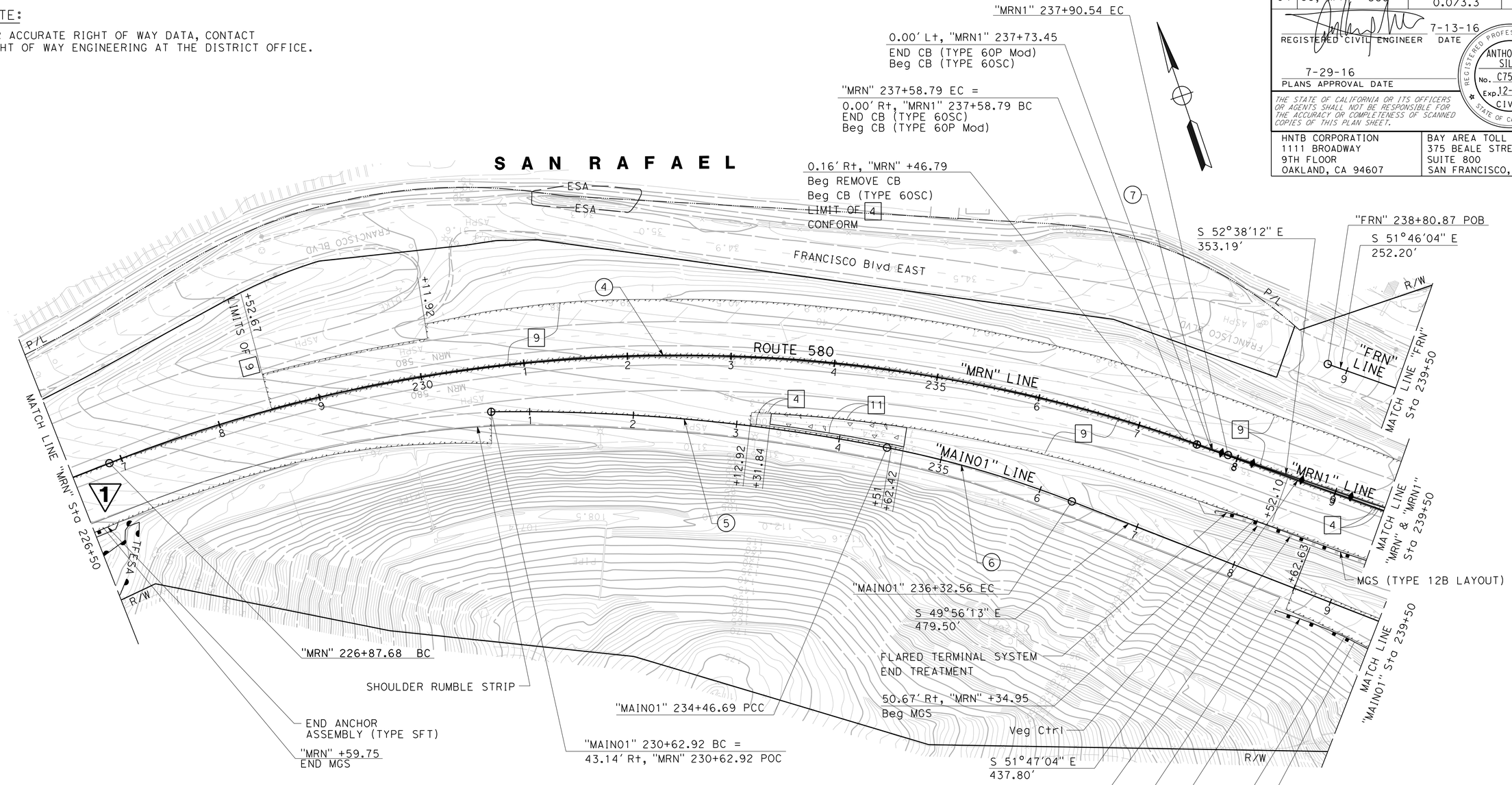

CURVE DATA

No.	R	Δ	T	L	CURVE CENTER N	CURVE CENTER E
4	1500'	40°54'49"	559.54'	1071.11'	2171100.650	5989414.165
5	1852'	11°52'26"	192.58'	383.77'	2170766.121	5989136.494
6	1042'	10°12'50"	93.18'	185.87'	2171467.951	5989539.235
7	12745'	0°8'34"	15.88'	31.75'	2182389.519	5998101.731

FOR NOTES, ABBREVIATIONS AND LEGEND, SEE SHEET L-1

1 **REPLACED PER ADDENDUM No. 1 DATED SEPTEMBER 23, 2016**

LAYOUT

SCALE: 1" = 50'

L-3

STATE OF CALIFORNIA - DEPARTMENT OF TRANSPORTATION
Caltrans

CONSULTANT FUNCTIONAL SUPERVISOR: JAMES PUN
CALCULATED-DESIGNED BY: QIANWEN DENG
CHECKED BY: ANTHONY SILVA
REVISED BY: RdL
DATE REVISED: 7-13-16

LAST REVISION 00-00-00
DATE PLOTTED => 9/23/2016
TIME PLOTTED => 10:19:40 AM

Dist	COUNTY	ROUTE	POST MILES TOTAL PROJECT	SHEET No.	TOTAL SHEETS
04	CC, Mrn	580	5.0/7.8, 0.0/3.3	33	579

REGISTERED CIVIL ENGINEER 7-13-16 DATE

7-29-16
PLANS APPROVAL DATE

REGISTERED PROFESSIONAL ENGINEER ANTHONY E. SILVA No. C75053 Exp. 12-31-17 CIVIL STATE OF CALIFORNIA

THE STATE OF CALIFORNIA OR ITS OFFICERS OR AGENTS SHALL NOT BE RESPONSIBLE FOR THE ACCURACY OR COMPLETENESS OF SCANNED COPIES OF THIS PLAN SHEET.

HNTB CORPORATION
1111 BROADWAY
9TH FLOOR
OAKLAND, CA 94607

BAY AREA TOLL AUTHORITY
375 BEALE STREET
SUITE 800
SAN FRANCISCO, CA 94105

NOTE:

FOR ACCURATE RIGHT OF WAY DATA, CONTACT RIGHT OF WAY ENGINEERING AT THE DISTRICT OFFICE.

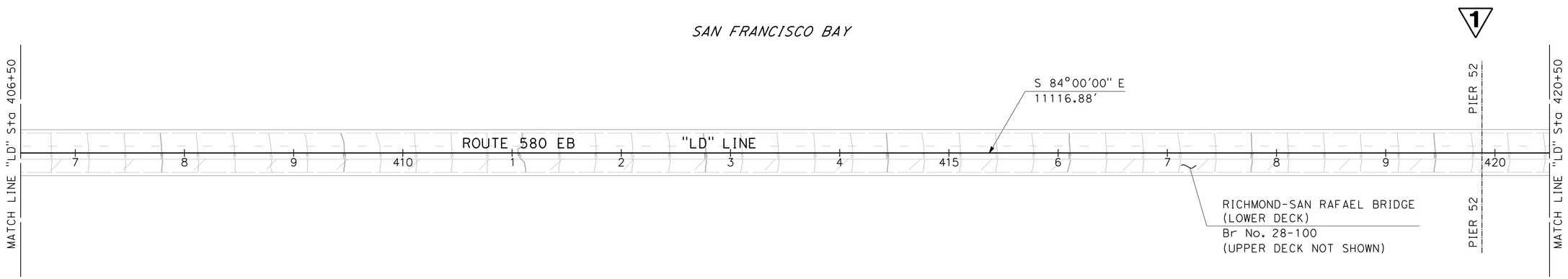

FOR NOTES, ABBREVIATIONS AND LEGEND, SEE SHEET L-1

1 **REPLACED PER ADDENDUM No. 1 DATED SEPTEMBER 23, 2016**

LAYOUT

SCALE: 1" = 50'

L-16

REVISED BY	DATE REVISED
RdL	7-13-16

CALCULATED-DESIGNED BY: QIANWEN DENG
CHECKED BY: ANTHONY SILVA
CONSULTANT FUNCTIONAL SUPERVISOR: JAMES PUN

STATE OF CALIFORNIA - DEPARTMENT OF TRANSPORTATION
Caltrans

LAST REVISION 00-00-00
DATE PLOTTED => 9/23/2016
TIME PLOTTED => 10:19:41 AM

Dist	COUNTY	ROUTE	POST MILES TOTAL PROJECT	SHEET No.	TOTAL SHEETS
04	CC, Mrn	580	5.0/7.8, 0.0/3.3	35	579

REGISTERED CIVIL ENGINEER 7-13-16 DATE

7-29-16
PLANS APPROVAL DATE

REGISTERED PROFESSIONAL ENGINEER ANTHONY E. SILVA No. C75053 Exp. 12-31-17 CIVIL STATE OF CALIFORNIA

THE STATE OF CALIFORNIA OR ITS OFFICERS OR AGENTS SHALL NOT BE RESPONSIBLE FOR THE ACCURACY OR COMPLETENESS OF SCANNED COPIES OF THIS PLAN SHEET.

HNTB CORPORATION
1111 BROADWAY
9TH FLOOR
OAKLAND, CA 94607

BAY AREA TOLL AUTHORITY
375 BEALE STREET
SUITE 800
SAN FRANCISCO, CA 94105

NOTE:

FOR ACCURATE RIGHT OF WAY DATA, CONTACT RIGHT OF WAY ENGINEERING AT THE DISTRICT OFFICE.

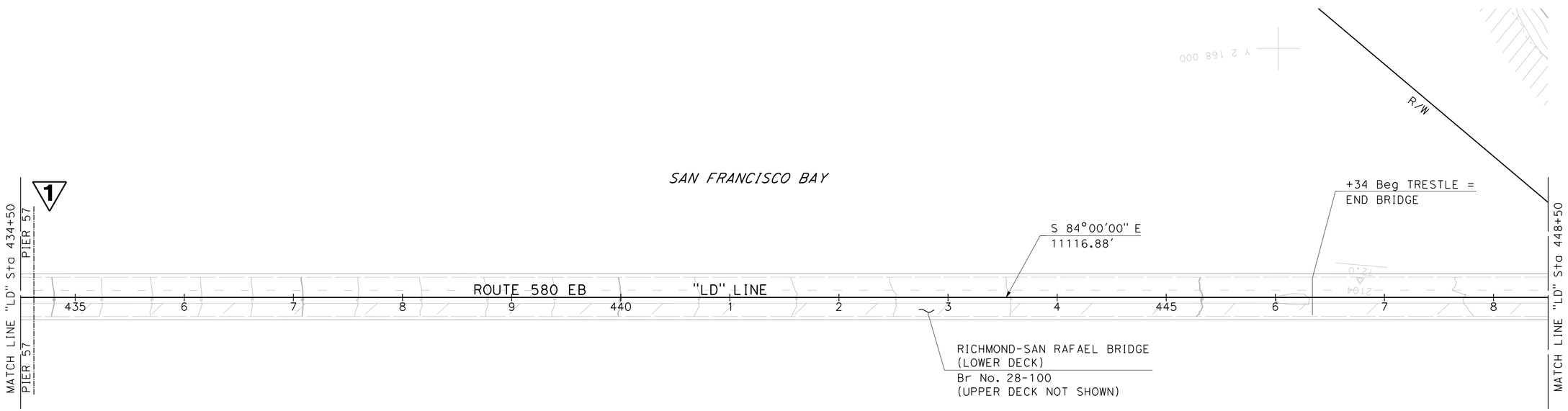

FOR NOTES, ABBREVIATIONS AND LEGEND, SEE SHEET L-1

1 **REPLACED PER ADDENDUM No. 1 DATED SEPTEMBER 23, 2016**

LAYOUT

SCALE: 1" = 50'

L-18

STATE OF CALIFORNIA - DEPARTMENT OF TRANSPORTATION

Caltrans

CONSULTANT FUNCTIONAL SUPERVISOR: JAMES PUN

CALCULATED-DESIGNED BY: QIANWEN DENG

CHECKED BY: ANTHONY SILVA

REVISED BY: RdL

DATE REVISED: 7-13-16

LAST REVISION 00-00-00

DATE PLOTTED => 9/23/2016
TIME PLOTTED => 10:19:42 AM

Dist	COUNTY	ROUTE	POST MILES TOTAL PROJECT	SHEET No.	TOTAL SHEETS
04	CC, Mrn	580	5.0/7.8, 0.0/3.3	37	579

REGISTERED CIVIL ENGINEER 7-13-16 DATE

7-29-16
PLANS APPROVAL DATE

REGISTERED PROFESSIONAL ENGINEER ANTHONY E. SILVA No. C75053 Exp. 12-31-17 CIVIL STATE OF CALIFORNIA

THE STATE OF CALIFORNIA OR ITS OFFICERS OR AGENTS SHALL NOT BE RESPONSIBLE FOR THE ACCURACY OR COMPLETENESS OF SCANNED COPIES OF THIS PLAN SHEET.

HNTB CORPORATION
1111 BROADWAY
9TH FLOOR
OAKLAND, CA 94607

BAY AREA TOLL AUTHORITY
375 BEALE STREET
SUITE 800
SAN FRANCISCO, CA 94105

NOTE:

FOR ACCURATE RIGHT OF WAY DATA, CONTACT RIGHT OF WAY ENGINEERING AT THE DISTRICT OFFICE.

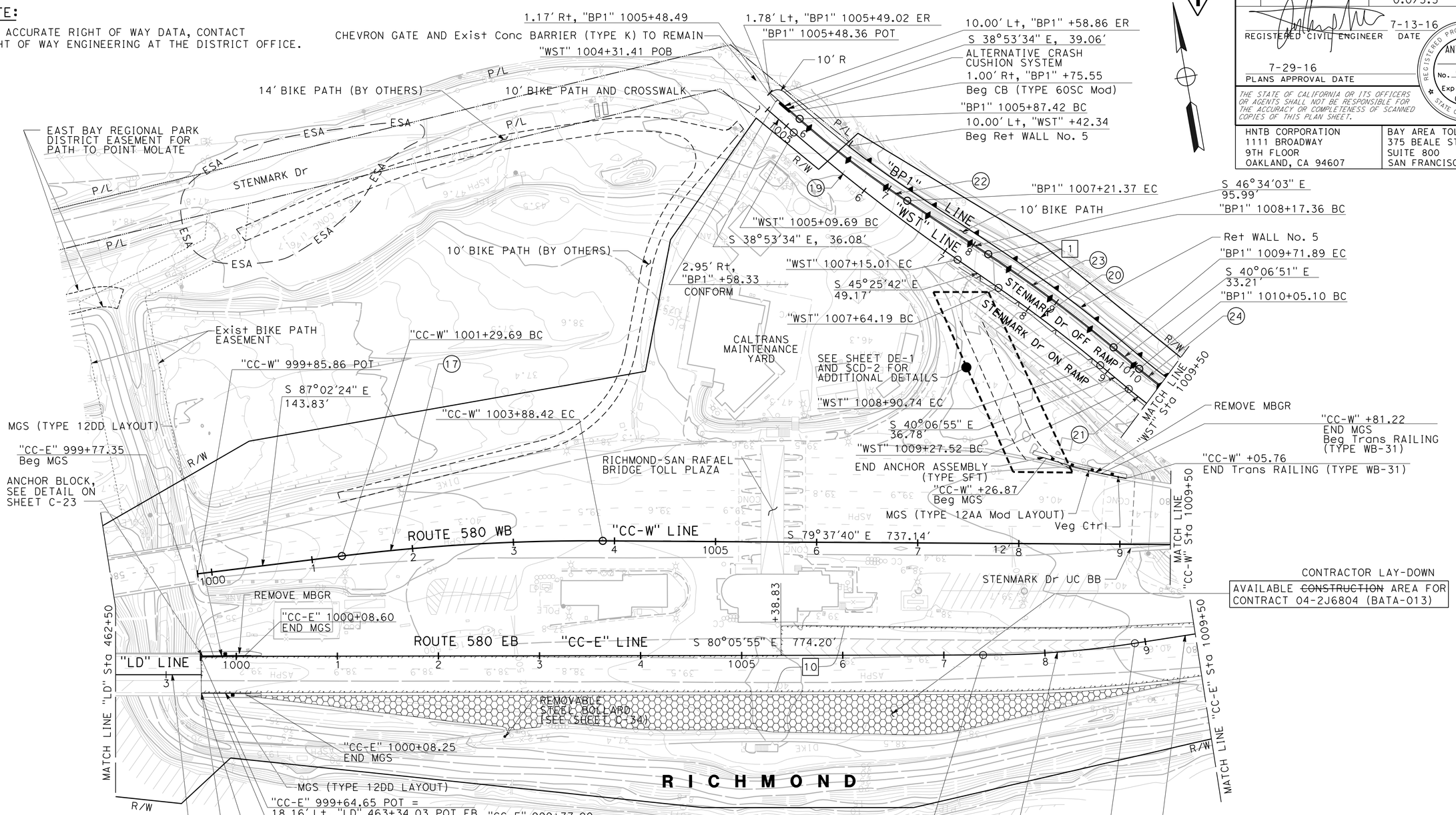

CURVE DATA

No.	R	Δ	T	L	CURVE CENTER N	CURVE CENTER E
17	2000'	07°24'44"	129.55'	258.73'	2165609.562	6012242.080
18	996'	08°40'20"	75.52'	150.75'	2168381.441	6013124.355
19	1800'	06°32'08"	102.77'	205.32'	2169072.243	6014259.401
20	1350'	5°22'16"	63.32'	126.55'	2166793.761	6012083.754
21	490'	41°52'59"	187.52'	358.19'	2167950.150	6013515.473
22	1000'	7°40'29"	67.08'	133.95'	2168582.263	6013644.799
23	1372'	6°27'12"	77.35'	154.53'	2166793.761	6012083.754
24	468'	17°15'44"	71.04'	141.00'	2167953.903	6013512.310

FOR NOTES, ABBREVIATIONS AND LEGEND, SEE SHEET L-1

1 **REPLACED PER ADDENDUM No. 1 DATED SEPTEMBER 23, 2016**

LAYOUT

SCALE: 1" = 50'

L-20

STATE OF CALIFORNIA - DEPARTMENT OF TRANSPORTATION
Caltrans
CONSULTANT FUNCTIONAL SUPERVISOR: JAMES PUN
CALCULATED-DESIGNED BY: QIANWEN DENG
CHECKED BY: ANTHONY SILVA
REVISED BY: RdL
DATE REVISED: 7-13-16

LAST REVISION 00-00-00
DATE PLOTTED => 9/23/2016
TIME PLOTTED => 10:19:43 AM

Dist	COUNTY	ROUTE	POST MILES TOTAL PROJECT	SHEET No.	TOTAL SHEETS
04	CC, Mrn	580	5.0/7.8, 0.0/3.3	38	579

REGISTERED CIVIL ENGINEER 7-13-16 DATE

7-29-16
PLANS APPROVAL DATE

REGISTERED PROFESSIONAL ENGINEER ANTHONY E. SILVA No. C75053 Exp. 12-31-17 CIVIL STATE OF CALIFORNIA

THE STATE OF CALIFORNIA OR ITS OFFICERS OR AGENTS SHALL NOT BE RESPONSIBLE FOR THE ACCURACY OR COMPLETENESS OF SCANNED COPIES OF THIS PLAN SHEET.

HNTB CORPORATION
1111 BROADWAY
9TH FLOOR
OAKLAND, CA 94607

BAY AREA TOLL AUTHORITY
375 BEALE STREET
SUITE 800
SAN FRANCISCO, CA 94105

NOTE:

FOR ACCURATE RIGHT OF WAY DATA, CONTACT RIGHT OF WAY ENGINEERING AT THE DISTRICT OFFICE.

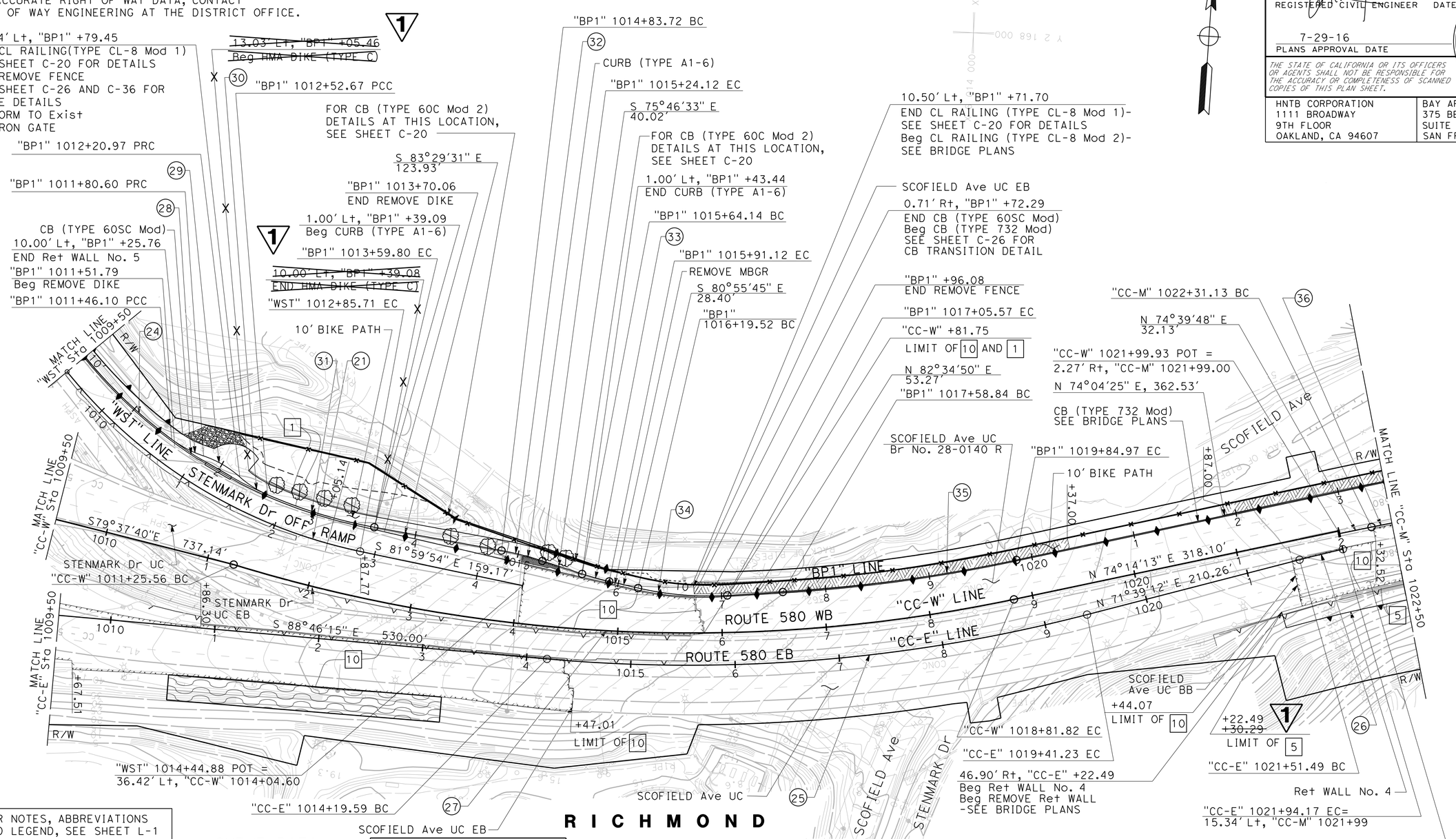

FOR NOTES, ABBREVIATIONS AND LEGEND, SEE SHEET L-1

CURVE DATA

No.	R	Δ	T	L	CURVE CENTER N	CURVE CENTER E
21	490'	41°52'59"	187.52'	358.19'	2167950.150	6013515.473
24	468'	17°15'44"	71.04'	141.00'	2167953.903	6013512.310
25	1527'	19°34'33"	263.38'	521.63'	2168900.700	6013665.616
26	1472'	1°39'40"	21.34'	42.68'	2166120.559	6014809.091
27	1500'	28°53'13"	386.35'	756.26'	2168904.989	6013667.838
28	110'	17°58'07"	17.39'	34.50'	2167652.384	6013319.307
29	100'	23°07'52"	20.46'	40.37'	2167449.216	6013266.178
30	100'	18°09'43"	15.98'	31.70'	2167607.277	6013388.720

CURVE DATA

No.	R	Δ	T	L	CURVE CENTER N	CURVE CENTER E
31	468'	13°06'56"	53.80'	107.13'	2167953.903	6013512.310
32	300'	7°42'57"	20.23'	40.40'	2167176.806	6013548.390
33	300'	5°09'12"	13.50'	26.98'	2167748.580	6013734.604
34	299'	16°29'25"	43.33'	86.06'	2167743.115	6013762.490
35	1523'	8°30'25"	113.27'	226.13'	2168963.746	6013657.253
36	1615'	39°59'35"	587.70'	1127.29'	2167745.819	6014932.861

1 REPLACED PER ADDENDUM No. 1 DATED SEPTEMBER 23, 2016

LAYOUT

SCALE: 1" = 50'

L-21

REVISED BY	DATE REVISED
RdL	7-13-16

CALCULATED-DESIGNED BY: QIANWEN DENG
CHECKED BY: ANTHONY SILVA
CONSULTANT FUNCTIONAL SUPERVISOR: JAMES PUN

STATE OF CALIFORNIA - DEPARTMENT OF TRANSPORTATION
Caltrans

LAST REVISION 00-00-00
DATE PLOTTED => 9/23/2016
TIME PLOTTED => 10:19:44 AM

Dist	COUNTY	ROUTE	POST MILES TOTAL PROJECT	SHEET No.	TOTAL SHEETS
04	CC, Mrn	580	5.0/7.8, 0.0/3.3	40	579

REGISTERED CIVIL ENGINEER 7-13-16 DATE

7-29-16
PLANS APPROVAL DATE

REGISTERED PROFESSIONAL ENGINEER ANTHONY E. SILVA No. C75053 Exp. 12-31-17 CIVIL STATE OF CALIFORNIA

THE STATE OF CALIFORNIA OR ITS OFFICERS OR AGENTS SHALL NOT BE RESPONSIBLE FOR THE ACCURACY OR COMPLETENESS OF SCANNED COPIES OF THIS PLAN SHEET.

HNTB CORPORATION
1111 BROADWAY
9TH FLOOR
OAKLAND, CA 94607

BAY AREA TOLL AUTHORITY
375 BEALE STREET
SUITE 800
SAN FRANCISCO, CA 94105

NOTES:

1. FOR ACCURATE RIGHT OF WAY DATA, CONTACT RIGHT OF WAY ENGINEERING AT THE DISTRICT OFFICE.
2. FOR CB (TYPE 60S/ 60SC) SCUPPER LOCATION, SEE SHEET C-29.

CURVE DATA

No.	R	Δ	T	L	CURVE CENTER N	CURVE CENTER E
42	260′	37°51′49"	89.18′	171.82′	2166911.819	6015699.583
43	317′	6°08′10"	16.99′	33.95′	2166896.733	6015644.616
44	42′	52°13′02"	20.58′	38.28′	2166811.662	6016022.101
45	49′	87°57′59"	47.29′	75.23′	2166739.056	6016132.301
46	150′	79°41′30"	125.18′	208.63′	2166689.859	6016348.712
47	10′	26°50′54"	2.39′	4.69′	2167214.579	6015977.091
48	300′	2°18′30"	6.04′	12.09′	2167211.925	6016012.716
49	65′	75°22′33"	50.22′	85.51′	2167208.492	6016113.456
50	300′	5°11′21"	13.59′	27.17′	2167146.236	6016127.454
51	143′	31°13′05"	39.95′	77.92′	2167067.653	6016137.776
52	290′	0°56′11"	2.37′	4.74′	2166855.216	6016044.368
53	6500′	3°53′04"	220.42′	440.67′	2172286.679	6020044.388
54	209′	24°15′08"	44.91′	88.47′	2166790.514	6016348.329
55	1062′	22°40′05"	212.82′	420.07′	2165499.490	6016486.893
56	642′	1°42′22"	9.56′	19.13′	2166068.313	6015820.508
57	215′	25°57′45"	49.60′	97.50′	2166762.812	6016330.352
58	1010′	24°47′43"	222.02	437.09′	2165519.386	6016497.945

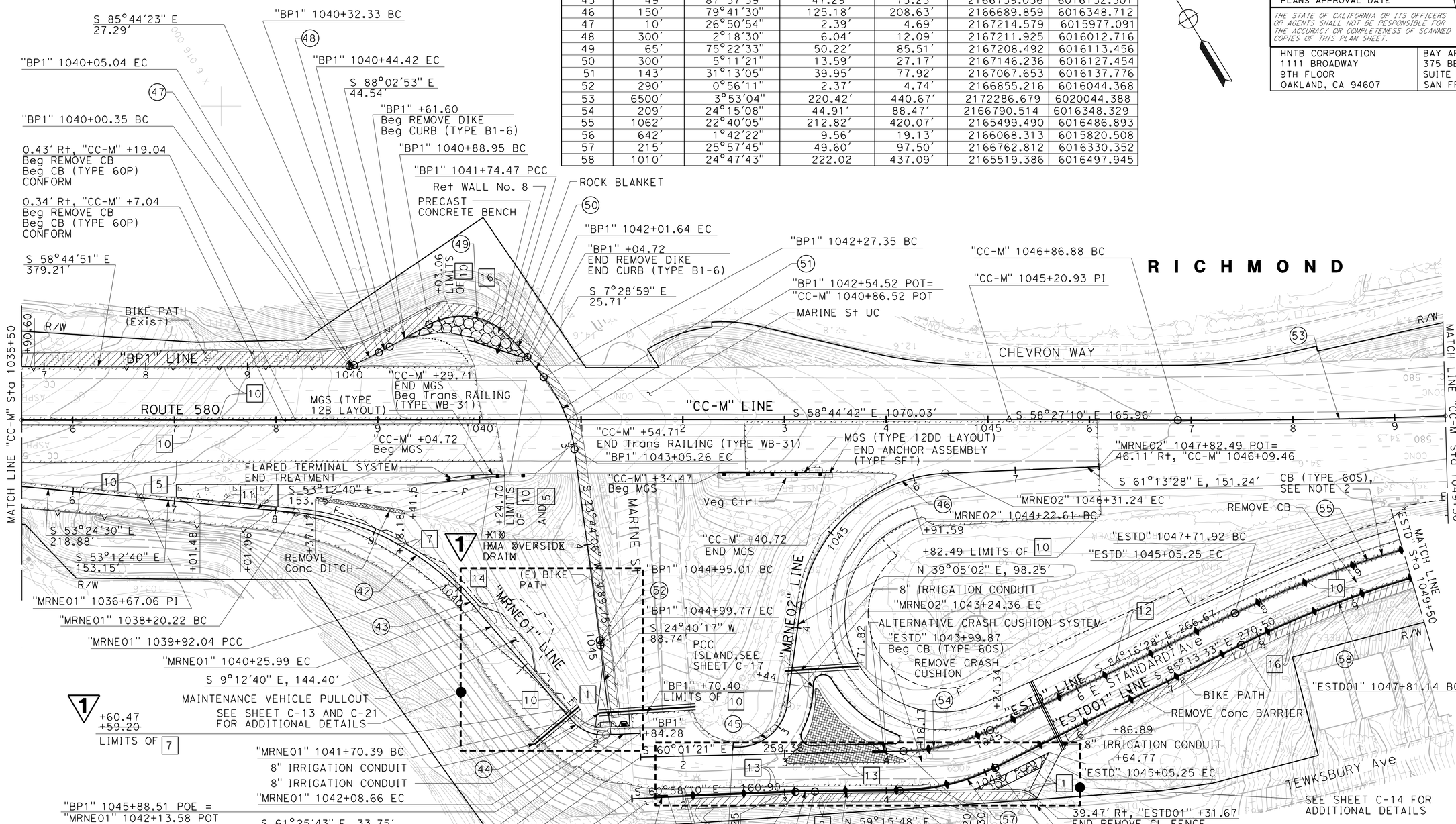

FOR NOTES, ABBREVIATIONS AND LEGEND, SEE SHEET L-1

LAYOUT

SCALE: 1" = 50′

REPLACED PER ADDENDUM No. 2 DATED SEPTEMBER 23, 2016

L-23

REVISED BY	DATE REVISED
RdL	7-13-16

CALCULATED-DESIGNED BY: QIANWEN DENG
CHECKED BY: ANTHONY SILVA
CONSULTANT FUNCTIONAL SUPERVISOR: JAMES PUN

STATE OF CALIFORNIA - DEPARTMENT OF TRANSPORTATION
Caltrans

LAST REVISION 00-00-00 | DATE PLOTTED => 9/23/2016 | TIME PLOTTED => 10:19:45 AM

Dist	COUNTY	ROUTE	POST MILES TOTAL PROJECT	SHEET No.	TOTAL SHEETS
04	CC, Mrn	580	5.0/7.8, 0.0/3.3	64	579

REGISTERED CIVIL ENGINEER 7-13-16 DATE

7-29-16
PLANS APPROVAL DATE

REGISTERED PROFESSIONAL ENGINEER ANTHONY E. SILVA No. C75053 Exp. 12-31-17 CIVIL STATE OF CALIFORNIA

THE STATE OF CALIFORNIA OR ITS OFFICERS OR AGENTS SHALL NOT BE RESPONSIBLE FOR THE ACCURACY OR COMPLETENESS OF SCANNED COPIES OF THIS PLAN SHEET.

HNTB CORPORATION
1111 BROADWAY
9TH FLOOR
OAKLAND, CA 94607

BAY AREA TOLL AUTHORITY
375 BEALE STREET
SUITE 800
SAN FRANCISCO, CA 94105

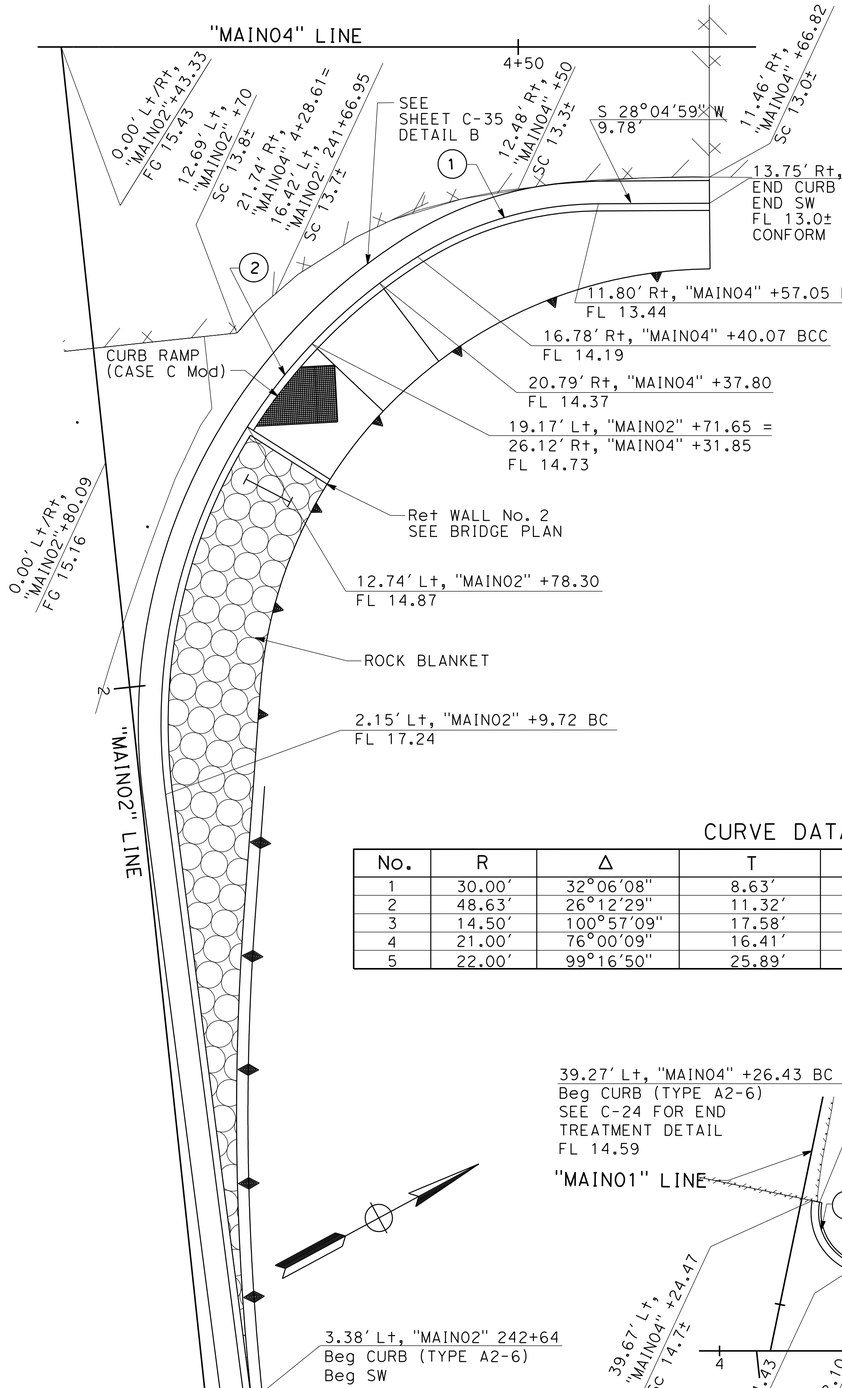

DETAIL 2

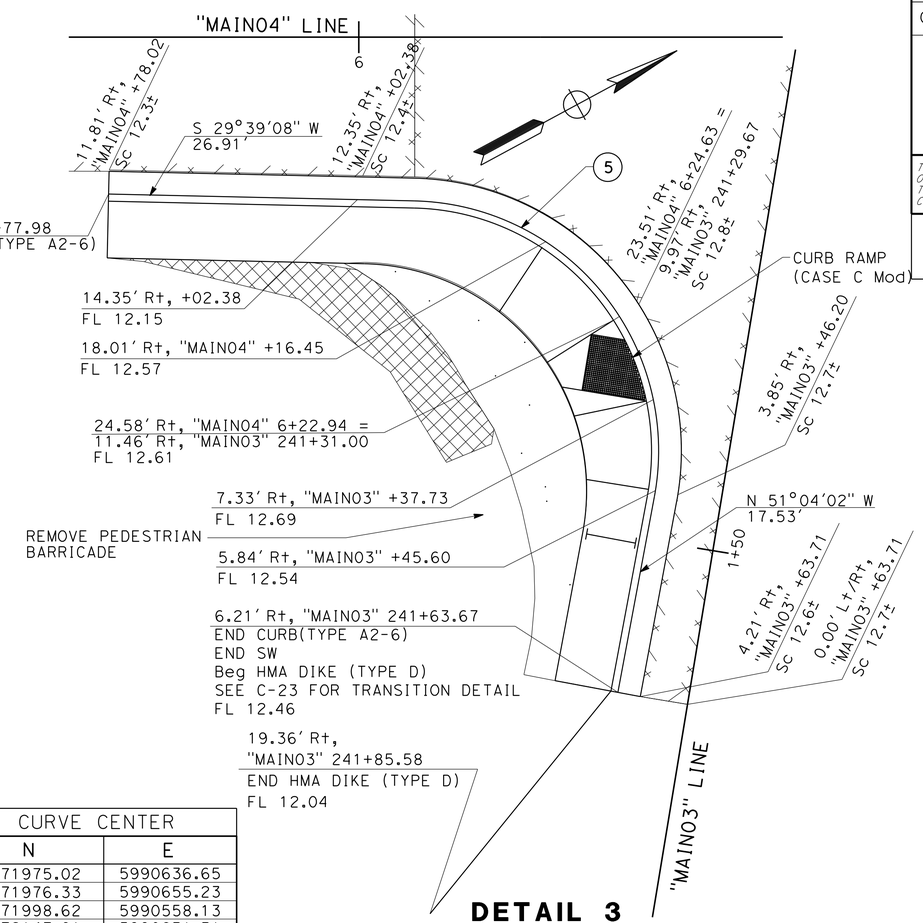

DETAIL 3

NOTE:
FOR PAVEMENT ELEVATION AND CURB RAMP (CASE C Mod) DETAILS, SEE SHEET C-35.

FOR NOTES, ABBREVIATIONS AND LEGEND, SEE SHEET C-1

CURVE DATA

No.	R	Δ	T	L	CURVE CENTER N	CURVE CENTER E
1	30.00'	32°06'08"	8.63'	16.81'	2171975.02	5990636.65
2	48.63'	26°12'29"	11.32'	22.24'	2171976.33	5990655.23
3	14.50'	100°57'09"	17.58'	25.55'	2171998.62	5990558.13
4	21.00'	76°00'09"	16.41'	27.86	2172147.81	5990631.31
5	22.00'	99°16'50"	25.89'	38.12	2172108.04	5990700.08

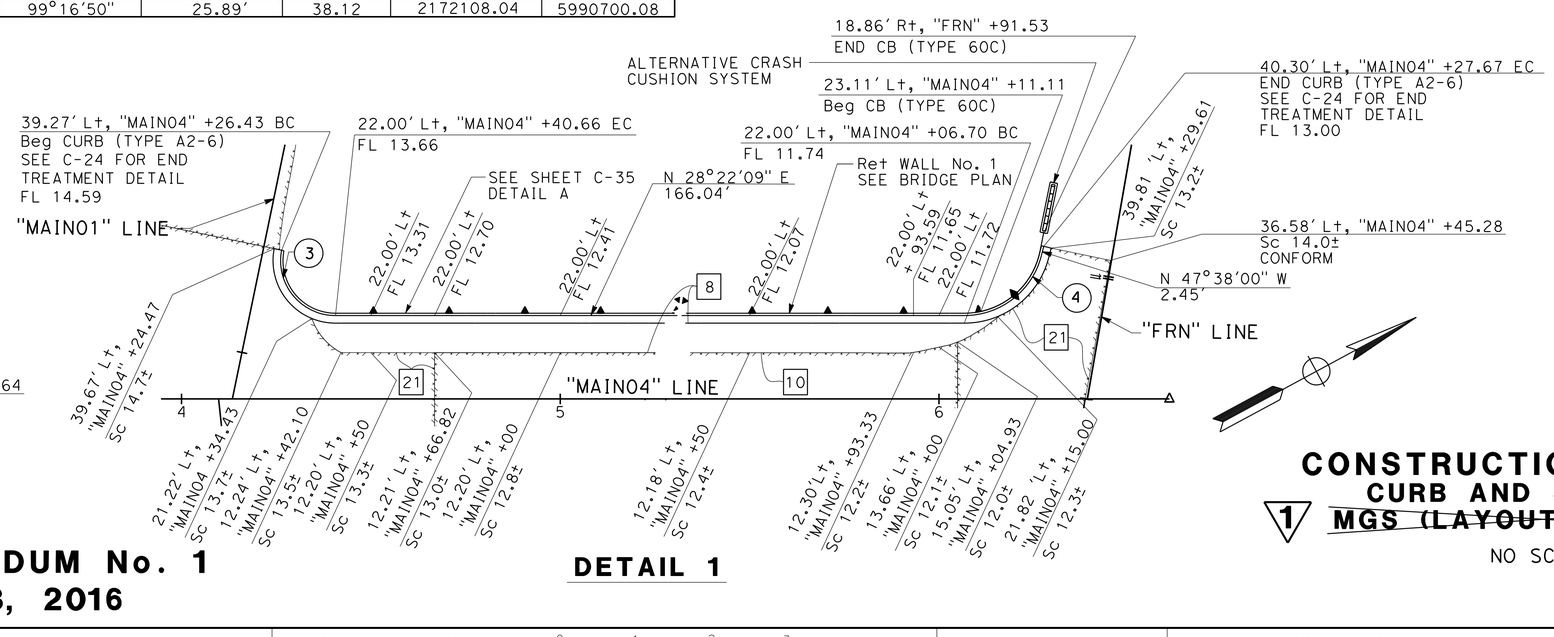

DETAIL 1

1 REPLACED PER ADDENDUM No. 1 DATED SEPTEMBER 23, 2016

CONSTRUCTION DETAILS
CURB AND SIDEWALK
1 ~~MGS (LAYOUT 12DD Mod)~~

NO SCALE

C-19

STATE OF CALIFORNIA - DEPARTMENT OF TRANSPORTATION
Caltrans
CONSULTANT FUNCTIONAL SUPERVISOR: JAMES PUN
CALCULATED-DESIGNED BY: STEPHANIE SCHUSTER
CHECKED BY: ANTHONY SILVA
REVISED BY: RdL
DATE REVISED: 7-13-16

LAST REVISION 00-00-00
DATE PLOTTED => 9/23/2016
TIME PLOTTED => 10:19:47 AM

Dist	COUNTY	ROUTE	POST MILES TOTAL PROJECT	SHEET No.	TOTAL SHEETS
04	CC, Mrn	580	5.0/7.8, 0.0/3.3	68	579

REGISTERED CIVIL ENGINEER 7-13-16 DATE

7-29-16
PLANS APPROVAL DATE

REGISTERED PROFESSIONAL ENGINEER ANTHONY E. SILVA No. C75053 Exp. 12-31-17 CIVIL STATE OF CALIFORNIA

THE STATE OF CALIFORNIA OR ITS OFFICERS OR AGENTS SHALL NOT BE RESPONSIBLE FOR THE ACCURACY OR COMPLETENESS OF SCANNED COPIES OF THIS PLAN SHEET.

HNTB CORPORATION
1111 BROADWAY
9TH FLOOR
OAKLAND, CA 94607

BAY AREA TOLL AUTHORITY
375 BEALE STREET
SUITE 800
SAN FRANCISCO, CA 94105

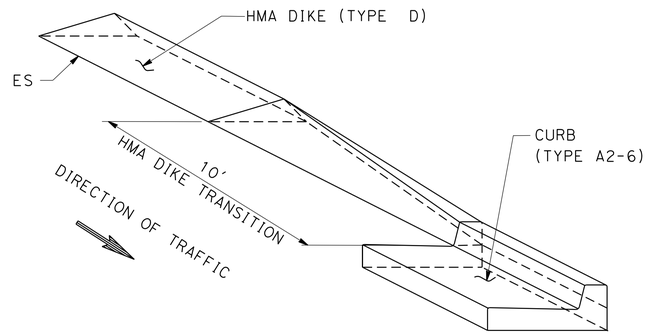

TRANSITION FROM "MAIN03" 241+64 TO 241+74

TRANSITION FROM HMA DIKE (TYPE D) TO CURB (TYPE A2-6)

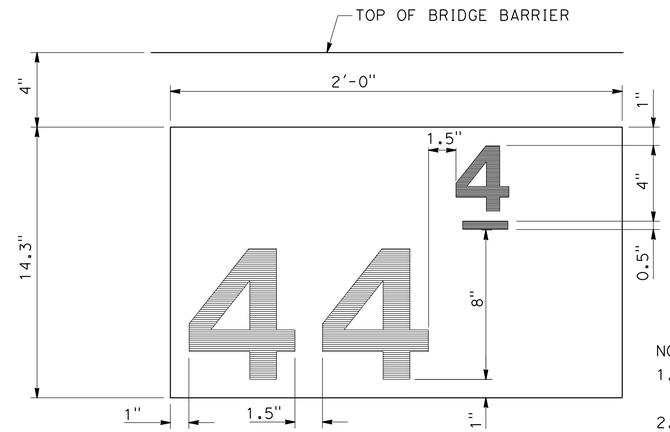

NOTES:
1. POST MILE MARKING SHALL BE PAINTED ON SIDE OF BRIDGE BARRIER.
2. WHOLE NUMBERS SHALL BE PAINTED USING A STENCIL SIZE DESIGNATION OF "8D". TENTHS SHALL BE PAINTED USING A STENCIL SIZE DESIGNATION OF "4D".

PAINT CONCRETE SURFACE POST MILE NUMBER TEMPLATE PAINT POST MILE MARKINGS ON BRIDGE BARRIER

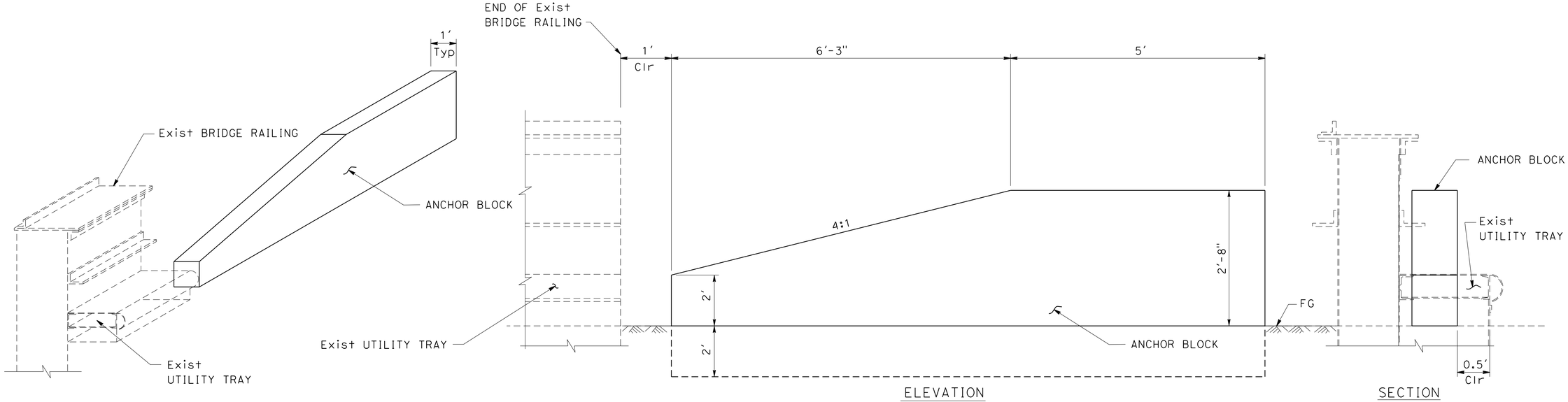

ANCHOR BLOCK DETAIL 1

NO SCALE

NOTES:
1. FOR DETAILS NOT SHOWN ON CONCRETE BLOCK, SEE RSP A77U3.
2. LEFT SIDE SHOWN, RIGHT SIDE SIMILAR.

1 REPLACED PER ADDENDUM No. 1 DATED SEPTEMBER 23, 2016

FOR NOTES, ABBREVIATIONS AND LEGEND, SEE SHEET C-1

CONSTRUCTION DETAILS

NO SCALE

C-23

STATE OF CALIFORNIA - DEPARTMENT OF TRANSPORTATION

REVISED BY RdL
DATE REVISED 7-13-16
DESIGNED BY QIANWEN DENG
CHECKED BY JAMES PUN
CONSULTANT FUNCTIONAL SUPERVISOR JAMES PUN

LAST REVISION 00-00-00
DATE PLOTTED => 9/23/2016
TIME PLOTTED => 10:19:48 AM

Dist	COUNTY	ROUTE	POST MILES TOTAL PROJECT	SHEET No.	TOTAL SHEETS
04	CC, Mrn	580	5.0/7.8, 0.0/3.3	92	579

REGISTERED CIVIL ENGINEER 7-13-16 DATE

7-29-16
PLANS APPROVAL DATE

REGISTERED PROFESSIONAL ENGINEER ANTHONY E. SILVA No. C75053 Exp. 12-31-17 CIVIL STATE OF CALIFORNIA

THE STATE OF CALIFORNIA OR ITS OFFICERS OR AGENTS SHALL NOT BE RESPONSIBLE FOR THE ACCURACY OR COMPLETENESS OF SCANNED COPIES OF THIS PLAN SHEET.

HNTB CORPORATION
1111 BROADWAY
9TH FLOOR
OAKLAND, CA 94607

BAY AREA TOLL AUTHORITY
375 BEALE STREET
SUITE 800
SAN FRANCISCO, CA 94105

1 REPLACED PER ADDENDUM No. 1 DATED SEPTEMBER 23, 2016

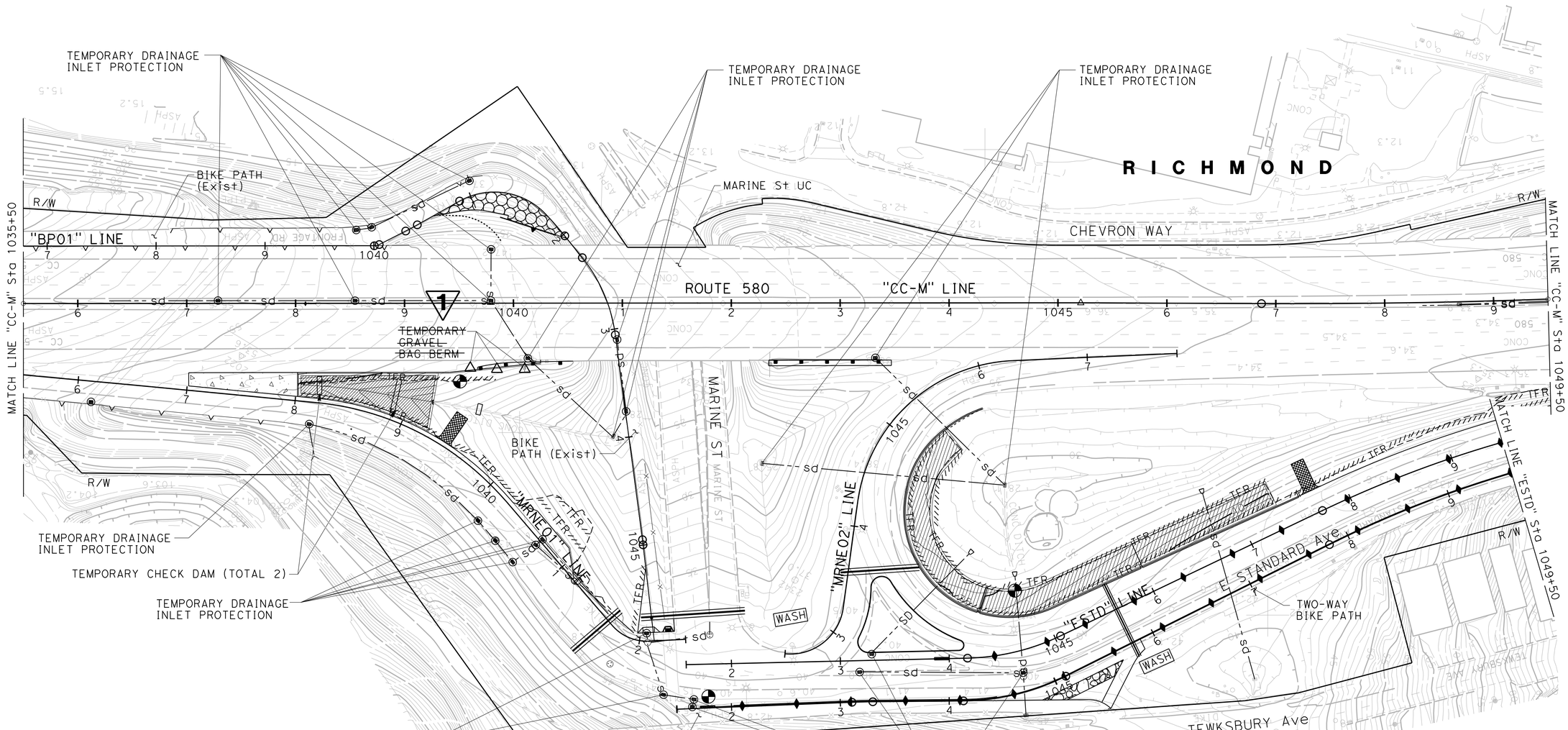

FOR NOTES, ABBREVIATIONS AND LEGEND, SEE SHEET WPC-1

APPROVED FOR TEMPORARY WATER POLLUTION CONTROL WORK ONLY

TEMPORARY WATER POLLUTION CONTROL PLAN

SCALE: 1" = 50'

WPC-8

REVISED BY	DATE REVISED
RdL	7-13-16

CALCULATED-DESIGNED BY: RYAN LITTELL
CHECKED BY: ANTHONY SILVA
CONSULTANT FUNCTIONAL SUPERVISOR: JAMES PUN

STATE OF CALIFORNIA - DEPARTMENT OF TRANSPORTATION
Caltrans

LAST REVISION 00-00-00 | DATE PLOTTED => 9/23/2016 | TIME PLOTTED => 10:19:50 AM

Dist	COUNTY	ROUTE	POST MILES TOTAL PROJECT	SHEET No.	TOTAL SHEETS
04	CC, Mrn	580	5.0/7.8, 0.0/3.3	94	579

REGISTERED CIVIL ENGINEER 7-13-16 DATE

7-29-16
PLANS APPROVAL DATE

REGISTERED PROFESSIONAL ENGINEER ANTHONY E. SILVA No. C75053 Exp. 12-31-17 CIVIL STATE OF CALIFORNIA

THE STATE OF CALIFORNIA OR ITS OFFICERS OR AGENTS SHALL NOT BE RESPONSIBLE FOR THE ACCURACY OR COMPLETENESS OF SCANNED COPIES OF THIS PLAN SHEET.

HNTB CORPORATION
1111 BROADWAY
9TH FLOOR
OAKLAND, CA 94607

BAY AREA TOLL AUTHORITY
375 BEALE STREET
SUITE 800
SAN FRANCISCO, CA 94105

TEMPORARY WATER POLLUTION CONTROL

STATION LIMITS	SIDE	TEMPORARY DRAINAGE INLET PROTECTION	TEMPORARY CHECK DAM	TEMPORARY CONSTRUCTION ENTRANCE	TEMPORARY CONCRETE WASHOUT [*]	POTENTIAL DISCHARGE SAMPLING POINT [N]	~~TEMPORARY GRAVEL BAG BERM~~ 1
		EA	LF	EA	EA	EA	~~LF~~
"SFD01" 202+85	L†	1					
"SFD01" 209+50 TO 211+50	R†		45				
"MRN" 212+96 TO 213+00	R†	2					
"MRN" 216+50 TO 226+50	L†/R†	5					
"MRN" 226+50 TO 239+50	R†						
"MRN" 235+00	R†				1		
"MRN" 226+50 TO 239+50	L†/R†	4					
"MAIN02" 241+93	L†					1	
"MAIN04" 3+35	L†				1		
"MAIN03" 241+21 TO 248+00	R†	5					
"MAIN04" 1+00 TO 6+50	L†/R†	14					
"MRN" 239+50 TO 249+50	L†/R†	10					
"LD" 463+16 TO "CC-E" 1000+44	R†	2				1	
"CC-W" 1004+07 TO 1007+33	L†	5					
"CC-W" 1008+75	L†				1		
"WST" 1005+50 TO 1010+50	L†	11					
"WST" 1005+63	L†				1	1	
"WST" 1007+80	R†			1			
"WST" 1010+68	L†					1	
"WST" 1012+09	L†	1		1	1		
"BP1" 1011+00 TO 1012+00	L†/R†	2					
"CC-E" 1009+30 TO 1014+00	L†/R†	4					
"CC-E" 1021+26 TO 1022+00	R†	4					
"CC-E" 1022+00 TO "CC-M" 1026+68	R†	3			1		
"CC-M" 1032+80 TO 1035+00	R†	13					
"CC-M" 1026+27	R†					1	
"CC-M" 1026+95 TO 1028+28	R†	5					
"CC-M" 1028+50	R†			1	1		
"CC-M" 1029+40 TO 1033+32	R†	4	154				
"CC-M" 1035+10	L†				1		
"CC-M" 1036+29 TO 1043+32	L†/R†	6					
"CC-M" 1038+05 TO 1040+29	R†		48				~~18~~
"CC-M" 1039+48	R†					1	
"BP1" 1039+00 TO 1045+00	L†/R†	5					
"MRNE01" 1039+42	L†			1			
"MRNE01" 1035+50 TO 1042+20	L†/R†	9					
"MRNE02" 1045+37 TO "ESTD" 1047+32	L†/R†						
"ESTD" 1041+63 TO 1044+99	L†/R†	6					
"ESTD" 1041+78 TO 1047+00	L†/R†				2	2	
"ESTD" 1047+50 TO 1050+17	L†			1			
"ESTD" 1055+50 TO 1057+00	R†				1	1	
"ESTD" 1052+25 TO 1057+11	L†/R†	11					
"CSTR" 1062+91 TO 1063+23	R†	2					
TOTAL		134	247	5	11	9	~~18~~

[N] = NOT A PAY ITEM, FOR INFORMATION ONLY
[*] = LOCATIONS SHOWN FOR INFORMATION ONLY

FENCE

STATION LIMITS	SIDE	TEMPORARY REINFORCED SILT FENCE
		LF
"SFD01" 204+50 TO 205+50	L†	302
"MRN" 216+00 TO 227+00	R†	1352
TOTAL		1654

1

TEMPORARY COVER

STATION LIMITS	SIDE	TEMPORARY STOCKPILE COVER
		SQYD
"MRN" 210+00 TO "MRN" 249+00	L†	1,186
"CC-E" 1000+00 TO "CC-M" 1060+00	R†/L†	15,480
TOTAL		16,666

1

TEMPORARY HYDRAULIC MULCH

STATION LIMITS	SIDE	TEMPORARY HYDRAULIC MULCH (BFM)
		SQYD
"MRN" 210+00 TO "MRN" 249+00	R†/L†	1,159
"CC-E" 1000+00 TO "CC-M" 1060+00	R†/L†	9,800
TOTAL		10,959

1 **REPLACED PER ADDENDUM No. 1 DATED SEPTEMBER 23, 2016**

TEMPORARY WATER POLLUTION CONTROL QUANTITIES

WPCQ-1

STATE OF CALIFORNIA - DEPARTMENT OF TRANSPORTATION
Caltrans®

CONSULTANT FUNCTIONAL SUPERVISOR: JAMES PUN
CALCULATED-DESIGNED BY: RYAN LITTELL
CHECKED BY: ANTHONY SILVA
REVISED BY: RdL
DATE REVISED: 7-13-16

LAST REVISION 00-00-00
DATE PLOTTED => 9/23/2016
TIME PLOTTED => 10:19:51 AM

Dist	COUNTY	ROUTE	POST MILES TOTAL PROJECT	SHEET No.	TOTAL SHEETS
04	CC, Mrn	580	5.0/7.8, 0.0/3.3	105	579

REGISTERED CIVIL ENGINEER 7-13-16 DATE

7-29-16
PLANS APPROVAL DATE

REGISTERED PROFESSIONAL ENGINEER STEPHANIE SCHUSTER No. C81246 Exp. 9-30-17 CIVIL STATE OF CALIFORNIA

THE STATE OF CALIFORNIA OR ITS OFFICERS OR AGENTS SHALL NOT BE RESPONSIBLE FOR THE ACCURACY OR COMPLETENESS OF SCANNED COPIES OF THIS PLAN SHEET.

HNTB CORPORATION
1111 BROADWAY
9TH FLOOR
OAKLAND, CA 94607

BAY AREA TOLL AUTHORITY
375 BEALE STREET
SUITE 800
SAN FRANCISCO, CA 94105

NOTE:
FOR ACCURATE RIGHT OF WAY DATA, CONTACT RIGHT OF WAY ENGINEERING AT THE DISTRICT OFFICE.

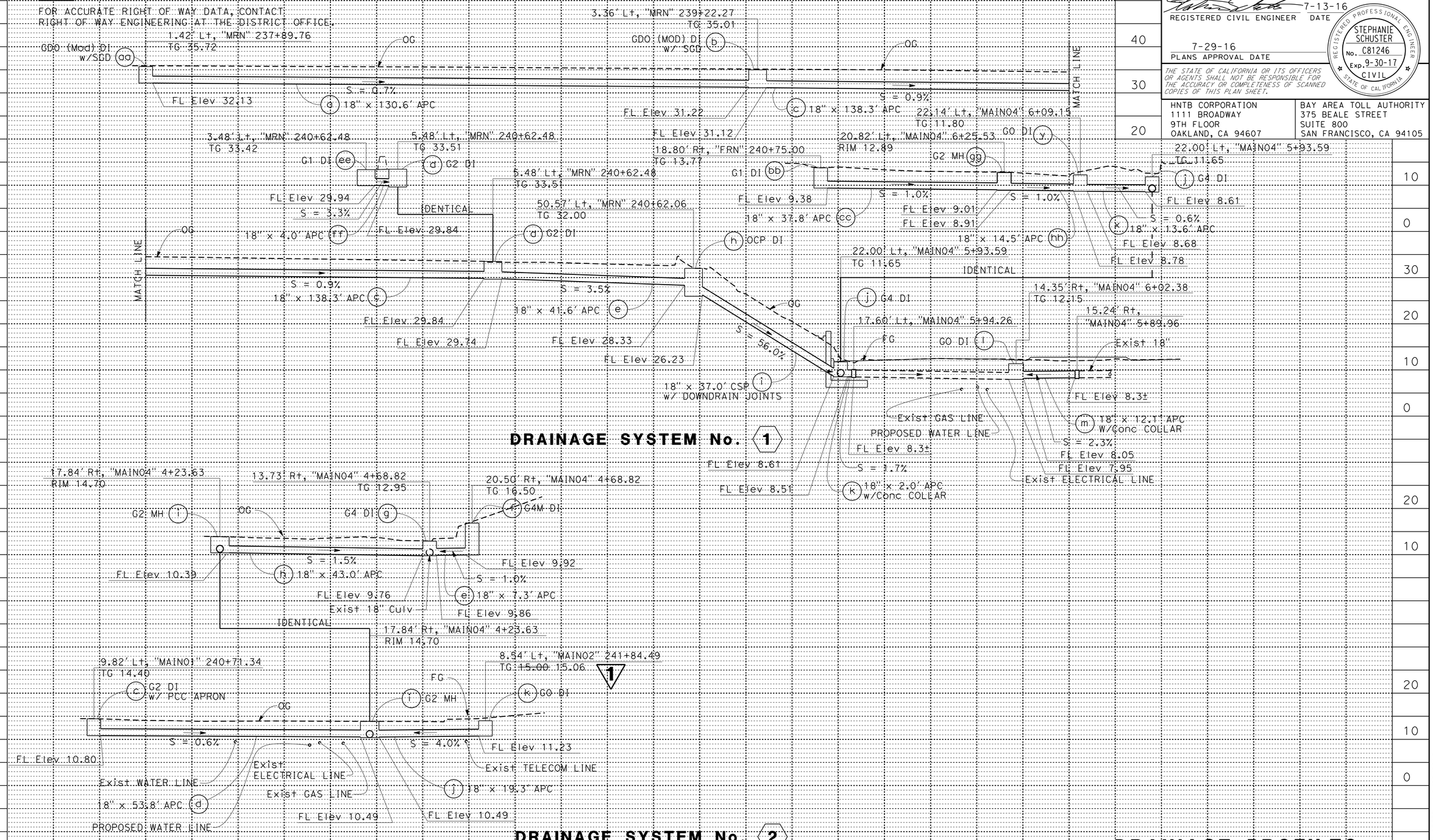

1 REPLACED PER ADDENDUM No. 1 DATED SEPTEMBER 23, 2016

DRAINAGE PROFILES

SCALE: Horiz 1" = 10'
Vert 1" = 10'

DP-1

STATE OF CALIFORNIA - DEPARTMENT OF TRANSPORTATION
Caltrans

CONSULTANT FUNCTIONAL SUPERVISOR: JAMES PUN
CALCULATED-DESIGNED BY: STEPHANIE SCHUSTER
CHECKED BY: JOHN MOUNTIN
REVISED BY: RdL
DATE REVISED: 7-13-16

LAST REVISION 00-00-00
DATE PLOTTED => 9/23/2016
TIME PLOTTED => 10:19:52 AM

Dist	COUNTY	ROUTE	POST MILES TOTAL PROJECT	SHEET No.	TOTAL SHEETS
04	CC, Mrn	580	5.0/7.8, 0.0/3.3	108	579

REGISTERED CIVIL ENGINEER 7-13-16 DATE

7-29-16
PLANS APPROVAL DATE

REGISTERED PROFESSIONAL ENGINEER STEPHANIE SCHUSTER No. C81246 Exp. 9-30-17 CIVIL STATE OF CALIFORNIA

THE STATE OF CALIFORNIA OR ITS OFFICERS OR AGENTS SHALL NOT BE RESPONSIBLE FOR THE ACCURACY OR COMPLETENESS OF SCANNED COPIES OF THIS PLAN SHEET.

HNTB CORPORATION
1111 BROADWAY
9TH FLOOR
OAKLAND, CA 94607

BAY AREA TOLL AUTHORITY
375 BEALE STREET
SUIT 800
SAN FRANCISCO, CA 94105

NOTE:

FOR ACCURATE RIGHT OF WAY DATA, CONTACT RIGHT OF WAY ENGINEERING AT THE DISTRICT OFFICE.

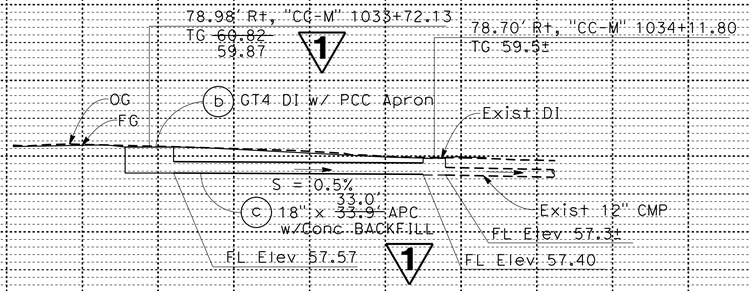

DRAINAGE SYSTEM No. 11

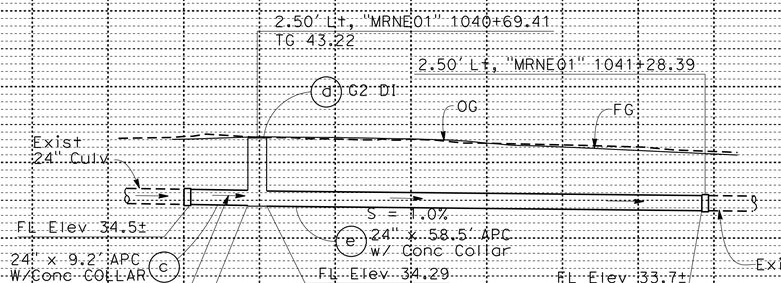

DRAINAGE SYSTEM No. 13

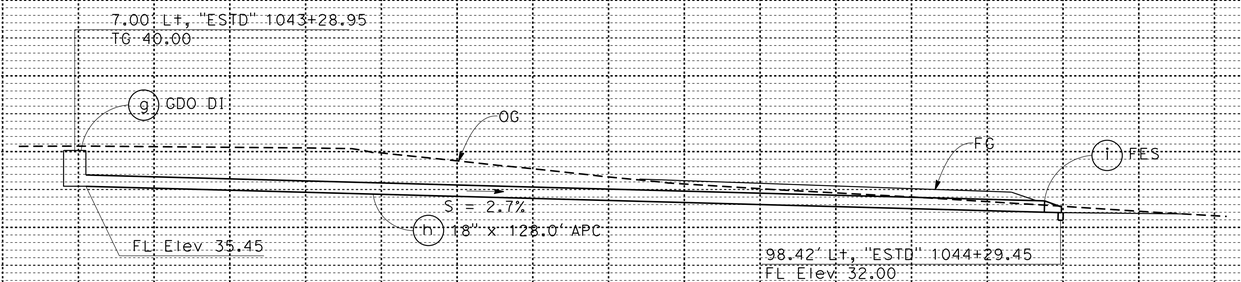

DRAINAGE SYSTEM No. 14

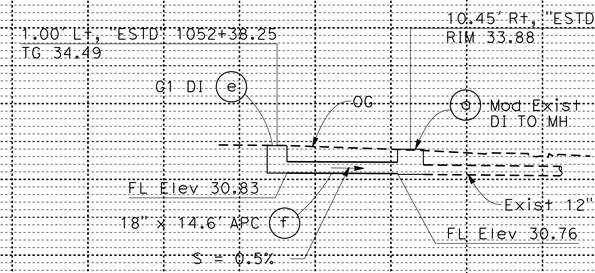

DRAINAGE SYSTEM No. 15

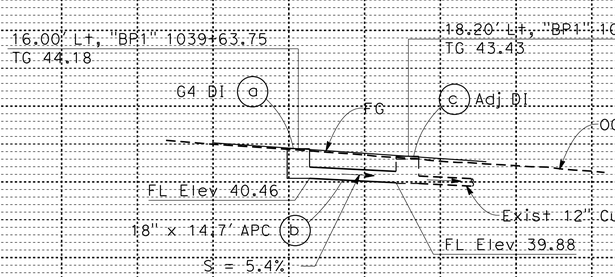

DRAINAGE SYSTEM No. 16

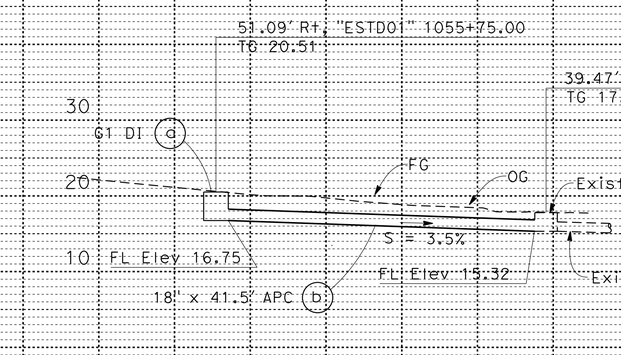

DRAINAGE SYSTEM No. 17

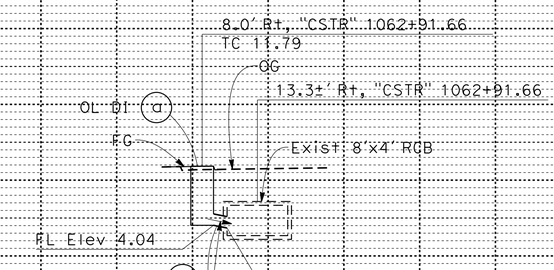

DRAINAGE SYSTEM No. 18

1 REPLACED PER ADDENDUM No. 1 DATED SEPTEMBER 23, 2016

DRAINAGE PROFILES

SCALE: Horiz 1" = 10'
Vert 1" = 10'

DP-4

STATE OF CALIFORNIA - DEPARTMENT OF TRANSPORTATION
Caltrans

CONSULTANT FUNCTIONAL SUPERVISOR: JAMES PUN
CALCULATED-DESIGNED BY: STEPHANIE SCHUSTER
CHECKED BY: JOHN MOUNTIN
REVISED BY: RdL
DATE REVISED: 7-13-16

LAST REVISION 00-00-00
DATE PLOTTED => 9/23/2016
TIME PLOTTED => 10:19:53 AM

Dist	COUNTY	ROUTE	POST MILES TOTAL PROJECT	SHEET No.	TOTAL SHEETS
04	CC, Mrn	580	5.0/7.8, 0.0/3.3	114	579

REGISTERED CIVIL ENGINEER 7-13-16 DATE

7-29-16
PLANS APPROVAL DATE

REGISTERED PROFESSIONAL ENGINEER STEPHANIE SCHUSTER No. C81246 Exp. 9-30-17 CIVIL STATE OF CALIFORNIA

THE STATE OF CALIFORNIA OR ITS OFFICERS OR AGENTS SHALL NOT BE RESPONSIBLE FOR THE ACCURACY OR COMPLETENESS OF SCANNED COPIES OF THIS PLAN SHEET.

HNTB CORPORATION
1111 BROADWAY
9TH FLOOR
OAKLAND, CA 94607

BAY AREA TOLL AUTHORITY
375 BEALE STREET
SUITE 800
SAN FRANCISCO, CA 94105

1

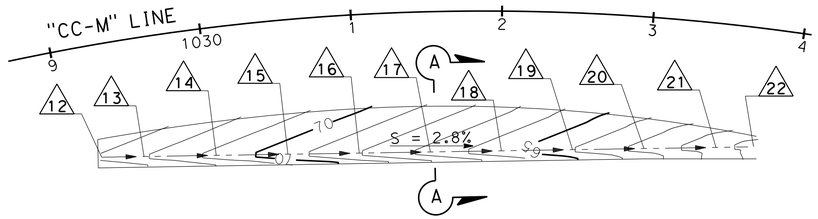

PLAN

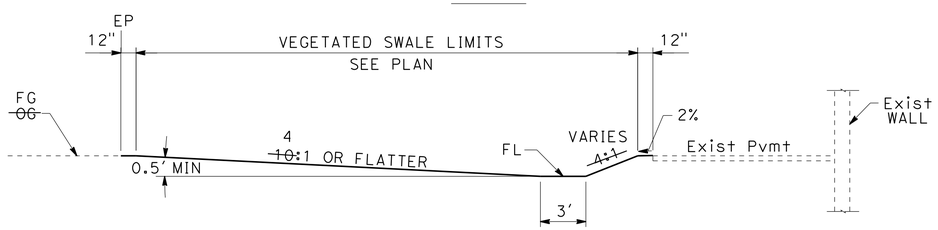

SECTION A-A

"CC-M" 1029+21.00 TO "CC-M" 1033+72.00

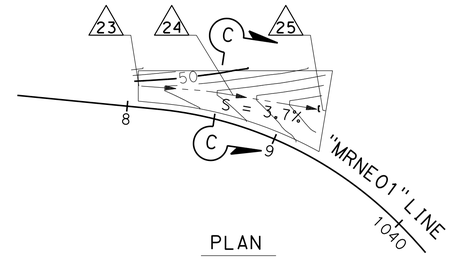

PLAN

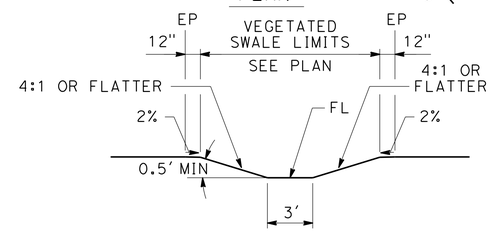

SECTION C-C

"MRNE01" 1038+04.00 TO "MRNE01" 1039+17.50

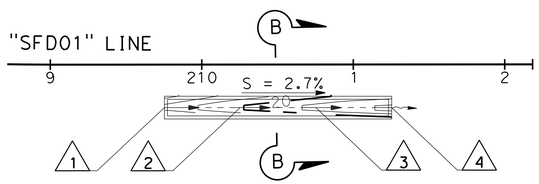

PLAN

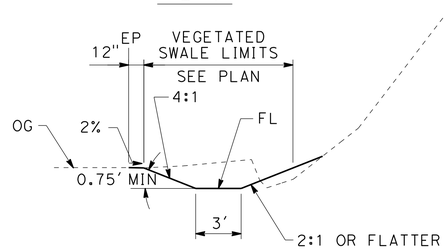

SECTION B-B

"SFD01" 209+50 TO "SFD01" 211+25

NO SCALE

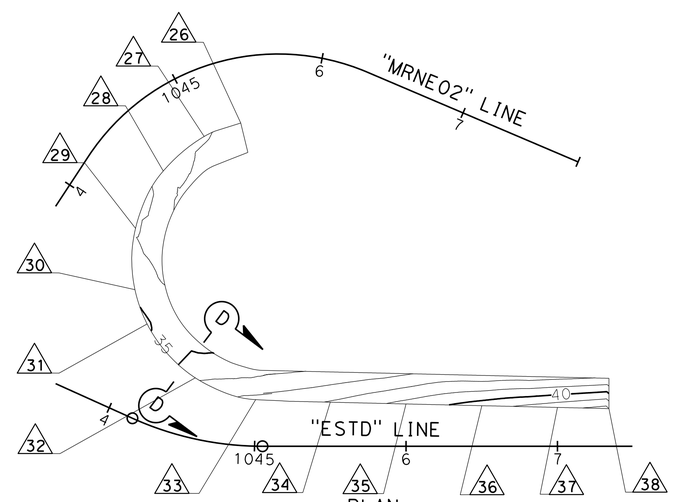

PLAN

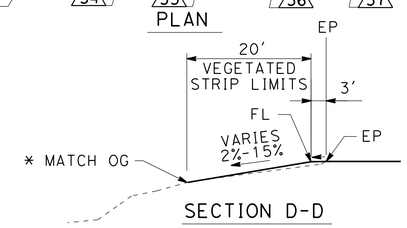

SECTION D-D

"MRNE02" 1045+36.00 TO "ESTD" 1047+36.00

NO SCALE

* GRADE BEYOND VEGETATED STRIP LIMITS 2:1 TO OG WHERE VEGETATED STRIP WOULD EXCEED 15%.

NOTES:

1. SEE SHEET DD-6 FOR FLOWLINE ELVATIONS.
2. FOR ADDITIONAL DETAILS SEE WATER POLLUTION CONTROL PLANS.

No. #	LOCATION	FL ELEV
1	28.50' Rt "SFD01" 209+50.00	21.8± *
2	28.50' Rt "SFD01" 210+00.00	20.5±
3	28.50' Rt "SFD01" 210+50.00	19.1±
4	28.50' Rt "SFD01" 211+25.00	17.8± *
12	73.96' Rt "CC-M" 1029+21.00	72.~~91~~ 75
13	78.20' Rt "CC-M" 1029+50.00	72.11
14	84.19' Rt "CC-M" 1030+00.00	70.75
15	88.57' Rt "CC-M" 1030+50.00	69.41
16	91.36' Rt "CC-M" 1031+00.00	68.07
17	92.58' Rt "CC-M" 1031+50.00	66.73
18	92.24' Rt "CC-M" 1032+00.00	65.40
19	90.33' Rt "CC-M" 1032+50.00	64.06
20	86.84' Rt "CC-M" 1033+00.00	62.71
21	81.75' Rt "CC-M" 1033+50.00	~~61.36~~ 61.00
22	78.98' Rt "CC-M" 1033+78.10	~~60.92~~ 59.97
23	13.13' Lt "MRNE01" 1038+04.00	49.40
24	18.06' Lt "MRNE01" 1038+62.00	47.77
25	30.90' Lt "MRNE01" 1039+17.50	44.95
26	42.60' Rt "MRNE02" 1045+36.00	EP-0.20
27	42.64' Rt "MRNE02" 1045+00.00	EP-0.20
28	44.71' Rt "MRNE02" 1044+50.00	EP-0.20
29	51.96' Rt "MRNE02" 1044+00.00	EP-0.20
30	73.95' Rt "MRNE02" 1043+66.00	EP-0.20
31	60.79' Lt "ESTD" 1044+00.00	EP-0.20
32	39.37' Lt "ESTD" 1044+50.00	EP-0.20
33	30.60' Lt "ESTD" 1045+00.00	EP-0.20
34	29.10' Lt "ESTD" 1045+50.00	EP-0.20
35	27.95' Lt "ESTD" 1046+00.00	EP-0.20
36	26.80' Lt "ESTD" 1046+50.00	EP-0.20
37	25.66' Lt "ESTD" 1047+00.00	EP-0.20
38	24.83' Lt "ESTD" 1047+36.00	EP-0.20

* - MATCH Exist

DRAINAGE DETAILS
VEGETATED SWALE
NO SCALE

DD-5

1 **REPLACED PER ADDENDUM No. 1 DATED SEPTEMBER 23, 2016**

STATE OF CALIFORNIA - DEPARTMENT OF TRANSPORTATION
Caltrans

CONSULTANT FUNCTIONAL SUPERVISOR: JAMES PUN
CALCULATED-DESIGNED BY: STEPHANIE SCHUSTER
CHECKED BY: JOHN MOUNTIN
REVISED BY: RdL
DATE REVISED: 7-13-16

LAST REVISION 00-00-00
DATE PLOTTED => 9/23/2016
TIME PLOTTED => 10:19:54 AM

Dist	COUNTY	ROUTE	POST MILES TOTAL PROJECT	SHEET No.	TOTAL SHEETS
04	CC, Mrn	580	5.0/7.8, 0.0/3.3	121	579

REGISTERED CIVIL ENGINEER 7-13-16 DATE

PLANS APPROVAL DATE 7-29-16

REGISTERED PROFESSIONAL ENGINEER STEPHANIE SCHUSTER No. C81246 Exp. 9-30-17 CIVIL STATE OF CALIFORNIA

THE STATE OF CALIFORNIA OR ITS OFFICERS OR AGENTS SHALL NOT BE RESPONSIBLE FOR THE ACCURACY OR COMPLETENESS OF SCANNED COPIES OF THIS PLAN SHEET.

HNTB CORPORATION
1111 BROADWAY
9TH FLOOR
OAKLAND, CA 94607

BAY AREA TOLL AUTHORITY
375 BEALE STREET
SUITE 800
SAN FRANCISCO, CA 94105

1

DRAINAGE QUANTITIES

DRAINAGE SHEET No.	DRAINAGE SYSTEM No. ⬡	DRAINAGE UNIT ○	ABANDON CULVERT	SAND BACKFILL	REMOVE CULVERT	REMOVE INLET	ABANDON MH	REMOVE MH	ADJUST INLET	ADJUST MH	MODIFY INLET TO MH	CAP INLET	ABANDON INLET	ALTERNATIVE PIPE CULVERT 18"	ALTERNATIVE PIPE CULVERT 24"	18" SLOTTED CORRUGATED STEEL PIPE (0.079" THICK)	18" CORRUGATED STEEL PIPE (0.079" THICK)	12" WELDED STEEL PIPE 0.250" THICK)	18" ALTERNATIVE FES	ROCK SLOPE PROTECTION (LIGHT, METHOD B)	ROCK SLOPE PROTECTION FABRIC (CLASS 8)	DRIANAGE INLET MARKER	(N) HMA (DITCH LINING)	MISCELLANEOUS IRON AND STEEL	MINOR CONCRETE (MINOR STRUCTURE)	MINOR CONCRETE (MISC CONSTRUCTION)	(N) HEIGHT OF INLET	(N) HEIGHT OF COVER	DESCRIPTION	STATION	DRAINAGE SYSTEM No. ⬡	DRAINAGE UNIT ○
			LF	CY	LF	EA	EA	EA	EA	EA	EA	EA	EA	LF		LF	LF	LF	EA	CY	SQYD	EA	LF	LB	CY	CY	Ft	Ft				
D-6	10	i																22.3											12" WSP		10	i
		j																						652	1.73		3.0		GT3M DI, GRATE TYPE 24-12			j
		k												5.9															18" APC			k
		l																						652	1.73		3.0		GT3M DI, GRATE TYPE 24-12			l
		m																						326	0.95		2.7		G1 DI, GRATE TYPE 24-12			m
		n												179.2												45.60			18" APC w/CONCRETE BACKFILL			n
		o			52.0																								REMOVE 18" CULVERT			o
		p				1																							REMOVE DI			p
		q			90.0																								REMOVE 18" CULVERT			q
		r				1																							REMOVE DI			r
D-7	19	a																						652	1.73		3.0		GT3M DI, GRATE TYPE 24-12	"CC-M" 1027+51.17	19	a
		b																33.8											12" WSP			b
		c																						326	1.85		5.1		G2 MH			c
		d			7.2																							6.6	REMOVE 24" CULVERT			d
		e				1																							REMOVE DI			e
		f			7.4																							6.6	REMOVE 24" CULVERT			f
		g				1																							REMOVE DI			g
		h			8.9																							6.6	REMOVE 24" CULVERT			h
		i													13.7											0.20			24" ACP w/CONCRETE COLLAR			i
		j				1																							REMOVE DI			j
		k			5.2																							8.5	REMOVE 24" CULVERT			k
		l												7.8															18" APC			l
		m																											GT3M DI, GRATE TYPE 24-12			m
D-7	11	b																						652	1.91 ~~2.35~~	0.78	2.3 ~~3.4~~		GT4 DI, GRATE TYPE 24-12 w/APRON	"CC-M" 1033+72.13	11	a
		c												33.~~9~~0												4.15			18" APC w/Conc BACKFILL			c
		f											1																ABANDON DI			f
		g	120.8	3.5																									ABANDON 12" CULVERT			g
D-8	12	a																							0.30				CUTOFF WALL		12	a
		b				1																							REMOVE DI	"MRNE01" 1040+11.90		b
		c												6.0												0.20			18" APC w/ CONCRETE COLLAR			c
		d																						326	1.17		4.0		G1 DI, GRATE TYPE 24-12			d
		e							1																				ADJUST DI, GRATE TYPE 24-12X			e
		f							1																				ADJUST DI, GRATE TYPE 24-12X			f
D-8	13	a			58.1																							6.6	REMOVE 24" CULVERT (PORTION)	"MRNE01" 1040+69.41	13	a
			120.8	3.5	228.8	6			2				1	~~232.8~~ 231.9	13.7			56.1						3586	~~11.81~~ 11.37	~~46.78~~ 50.93			SHEET TOTAL			

(N) - NOT A SEPARATE PAY ITEM, FOR INFORMATION ONLY.

1 **REPLACED PER ADDENDUM No. 1 DATED SEPTEMBER 23, 2016**

DRAINAGE QUANTITIES
DQ-4

STATE OF CALIFORNIA - DEPARTMENT OF TRANSPORTATION
Caltrans

CONSULTANT FUNCTIONAL SUPERVISOR: JAMES PUN
CALCULATED-DESIGNED BY: STEPHANIE SCHUSTER
CHECKED BY: JOHN MOUNTIN
REVISED BY: RdL
DATE REVISED: 7-13-16

LAST REVISION 00-00-00
DATE PLOTTED => 9/23/2016
TIME PLOTTED => 10:19:55 AM

Dist	COUNTY	ROUTE	POST MILES TOTAL PROJECT	SHEET No.	TOTAL SHEETS
04	CC, Mrn	580	5.0/7.8, 0.0/3.3	123	579

REGISTERED CIVIL ENGINEER 7-13-16 DATE

7-29-16
PLANS APPROVAL DATE

REGISTERED PROFESSIONAL ENGINEER STEPHANIE SCHUSTER No. C81246 Exp. 9-30-17 CIVIL STATE OF CALIFORNIA

THE STATE OF CALIFORNIA OR ITS OFFICERS OR AGENTS SHALL NOT BE RESPONSIBLE FOR THE ACCURACY OR COMPLETENESS OF SCANNED COPIES OF THIS PLAN SHEET.

HNTB CORPORATION
1111 BROADWAY
9TH FLOOR
OAKLAND, CA 94607

BAY AREA TOLL AUTHORITY
375 BEALE STREET
SUITE 800
SAN FRANCISCO, CA 94105

1

DRAINAGE QUANTITIES SUMMARY

SHEET No.	ABANDON CULVERT	SAND BACKFILL	REMOVE CULVERT	REMOVE INLET	ABANDON MH	REMOVE MH	ADJUST INLET	ADJUST MH	MODIFY INLET TO MH	CAP INLET	ABANDON INLET	ALTERNATIVE PIPE CULVERT 18"	ALTERNATIVE PIPE CULVERT 24"	18" SLOTTED CORRUGATED STEEL PIPE (0.079" THICK)	18" CORRUGATED STEEL PIPE (0.079" THICK)	12" WELDED STEEL PIPE 0.250" THICK	18" ALTERNATIVE FES	ROCK SLOPE PROTECTION (LIGHT, METHOD B)	ROCK SLOPE PROTECTION FABRIC (CLASS 8)	DRAINAGE INLET MARKER	MISCELLANEOUS IRON AND STEEL	MINOR CONCRETE (MINOR STRUCTURE)	MINOR CONCRETE (MISC CONSTRUCTION)	DESCRIPTION
	LF	CY	LF	EA	EA	EA	EA	EA	EA	EA	EA	LF		LF	LF	LF	EA	CY	SQYD	EA	LB	CY	CY	
DQ-1	28.8	0.8	389.6	5	1	1				1		376.0			37.0					5	3075	11.56	3.19	
DQ-2			282.7	5			1					237.4		143.3						5	3977	15.47	18.85	
DQ-3			5.4	2						1		746.9	3.8			29.7				10	5002	30.97	39.11	
DQ-4	120.8	3.5	228.8	6			2				1	~~232.8~~	13.7			56.1					3586	~~11.81~~	~~46.78~~	
DQ-5	155.2	4.9		2			1	1	2	1	1	201.1	67.7				1	3.0	11.2	6	1934	13.04	0.40	
TOTAL	304.8	9.2	906.5	20	1	1	4	1	2	3	2	~~1,794.2~~ 1,793.3	85.2 231.9	143.3	37.0	85.8	1	3.0	11.2	26	17,574	~~82.85~~ 82.41 11.37	~~108.33~~ 112.48 50.93	

(N) - NOT A SEPARATE PAY ITEM, FOR INFORMATION ONLY.

1 **REPLACED PER ADDENDUM No. 1 DATED SEPTEMBER 23, 2016**

DRAINAGE QUANTITIES
DQ-6

STATE OF CALIFORNIA - DEPARTMENT OF TRANSPORTATION
Caltrans

CONSULTANT FUNCTIONAL SUPERVISOR: JAMES PUN
CALCULATED-DESIGNED BY: STEPHANIE SCHUSTER
CHECKED BY: JOHN MOUNTIN
REVISED BY: RdL
DATE REVISED: 7-13-16

LAST REVISION 00-00-00
DATE PLOTTED => 9/23/2016
TIME PLOTTED => 10:19:56 AM

Dist	COUNTY	ROUTE	POST MILES TOTAL PROJECT	SHEET No.	TOTAL SHEETS
04	CC, Mrn	580	5.0/7.8, 0.0/3.3	127	579

REGISTERED CIVIL ENGINEER 7-27-16 DATE

7-29-16
PLANS APPROVAL DATE

REGISTERED PROFESSIONAL ENGINEER JULIA H. CHUANG No. 72139 Exp. 6-30-18 CIVIL STATE OF CALIFORNIA

THE STATE OF CALIFORNIA OR ITS OFFICERS OR AGENTS SHALL NOT BE RESPONSIBLE FOR THE ACCURACY OR COMPLETENESS OF SCANNED COPIES OF THIS PLAN SHEET.

MARK THOMAS & COMPANY, INC.
3000 OAK ROAD, SUITE 650
WALNUT CREEK, CA 94597

BAY AREA TOLL AUTHORITY
375 BEALE STREET, SUITE 800
SAN FRANCISCO, CA 94105

NOTES:

1. FOR NOTES, ABBREVIATIONS AND LEGEND, SEE SHEET U-1.
2. FOR ACCURATE RIGHT OF WAY DATA, CONTACT RIGHT OF WAY ENGINEERING AT THE DISTRICT OFFICE.
3. CONTRACTOR TO INSTALL PIPE (FURNISH BY ~~DATA~~ MMWD). SEE SPECIAL PROVISIONS AND SHEETS U-26 AND U-27.
4. CONTRACTOR SHALL COORDINATE WITH PG&E TO PROTECT Exist GAS PIPE AND CASING DURING CONSTRUCTION OF RETAINING ~~WLL~~ WALL No. 2 (SEE STRUCTURE PLANS).

1

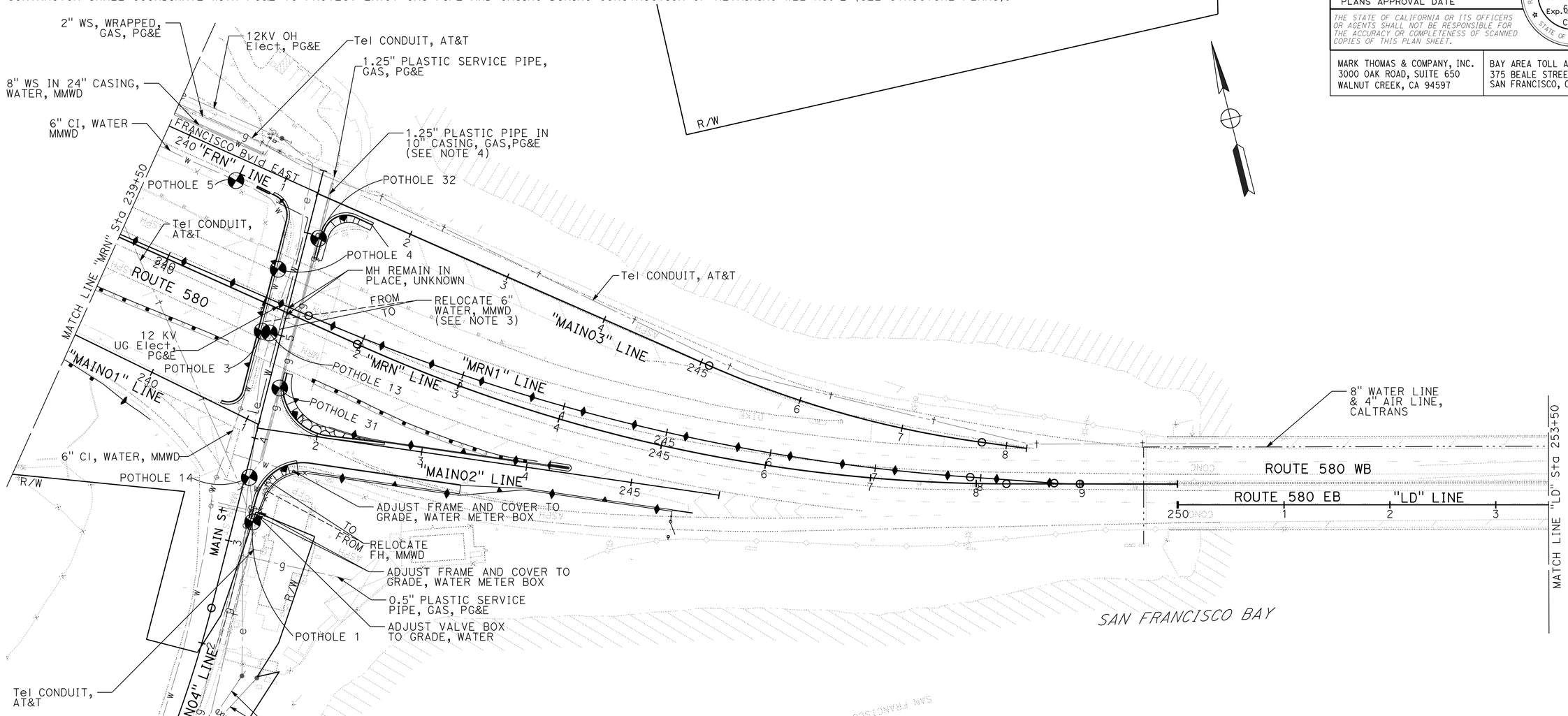

POTHOLE DATA

POTHOLE No.	OWNER	FACILITY	NORTHING	EASTING	GROUND Elev	TOP OF FACILITY Elev
1	AT&T	TELEPHONE	2171869.203	5990549.627	16.04	13.29
3	MMWD	6" WATER	2172041.910	5990601.924	13.84	10.43
4	MMWD	6" WATER	2172095.009	5990630.734	13.82	10.32
5	MMWD	6" WATER	2172185.985	5990612.389	14.81	11.48
13	PG&E	ELECTRIC	2172038.711	5990608.286	12.81	10.98
14	PG&E	2" GAS	2171910.865	5990556.712	15.26	12.10
	PG&E	ELECTRIC	2171910.865	5990556.712	15.26	13.10
31	PG&E	1.25" GAS IN 10" CASING	2171985.821	5990605.070	13.46	11.46
32	PG&E	1.25" GAS IN 10" CASING	2172114.067	5990675.217	12.40	10.65

1 **REPLACED PER ADDENDUM No. 1 DATED SEPTEMBER 23, 2016**

APPROVED FOR UTILITY WORK ONLY

UTILITY PLAN

SCALE: 1" = 50'

U-4

JHC	9-14-16	
JHC	7-27-16	
REVISED BY	DATE REVISED	
JULIA H. CHUANG	QUYNH NGUYEN	
CALCULATED-DESIGNED BY	CHECKED BY	
CONSULTANT FUNCTIONAL SUPERVISOR	SASHA DANSKY	

STATE OF CALIFORNIA - DEPARTMENT OF TRANSPORTATION
Caltrans

LAST REVISION XX-XX-XX | DATE PLOTTED => 23-SEP-2016 | TIME PLOTTED => 08:53

Dist	COUNTY	ROUTE	POST MILES TOTAL PROJECT	SHEET No.	TOTAL SHEETS
04	CC, Mrn	580	5.0/7.8, 0.0/3.3	143	579

REGISTERED CIVIL ENGINEER 7-27-16 DATE

7-29-16
PLANS APPROVAL DATE

REGISTERED PROFESSIONAL ENGINEER JULIA H. CHUANG No. 72139 Exp. 6-30-18 CIVIL STATE OF CALIFORNIA

THE STATE OF CALIFORNIA OR ITS OFFICERS OR AGENTS SHALL NOT BE RESPONSIBLE FOR THE ACCURACY OR COMPLETENESS OF SCANNED COPIES OF THIS PLAN SHEET.

MARK THOMAS & COMPANY, INC.
3000 OAK ROAD, SUITE 650
WALNUT CREEK, CA 94597

BAY AREA TOLL AUTHORITY
375 BEALE STREET, SUITE 800
SAN FRANCISCO, CA 94105

NOTES:

1. FOR NOTES, ABBREVIATIONS AND LEGEND, SEE SHEET U-1.
2. FOR ACCURATE RIGHT OF WAY DATA, CONTACT RIGHT OF WAY ENGINEERING AT THE DISTRICT OFFICE.
3. CONTRACTOR SHALL COORDINATE WITH PG&E TO PROTECT OR SUPPORT Exist UTILITY POLE DURING RETAINING WALL No. 5 CONSTRUCTION.
4. CONTRACTOR TO COORDINATE SOIL NAIL WALL CONSTRUCTION WITH EBMUD WATER PIPE RELOCATION. SEE SPECIAL PROVISIONS.
5. UTILITY INFORMATION IS INCOMPLETE. POSITIVE LOCATION OF THE 4-INCH SEWER MAIN HAS NOT BEEN DETERMINED. PLACEMENT OF Conc BARRIER TYPE 60SC Mod IN THE VICINITY OF SEWER MAIN REQUIRES GRINDING OF Exist PAVEMENT ONLY.

1

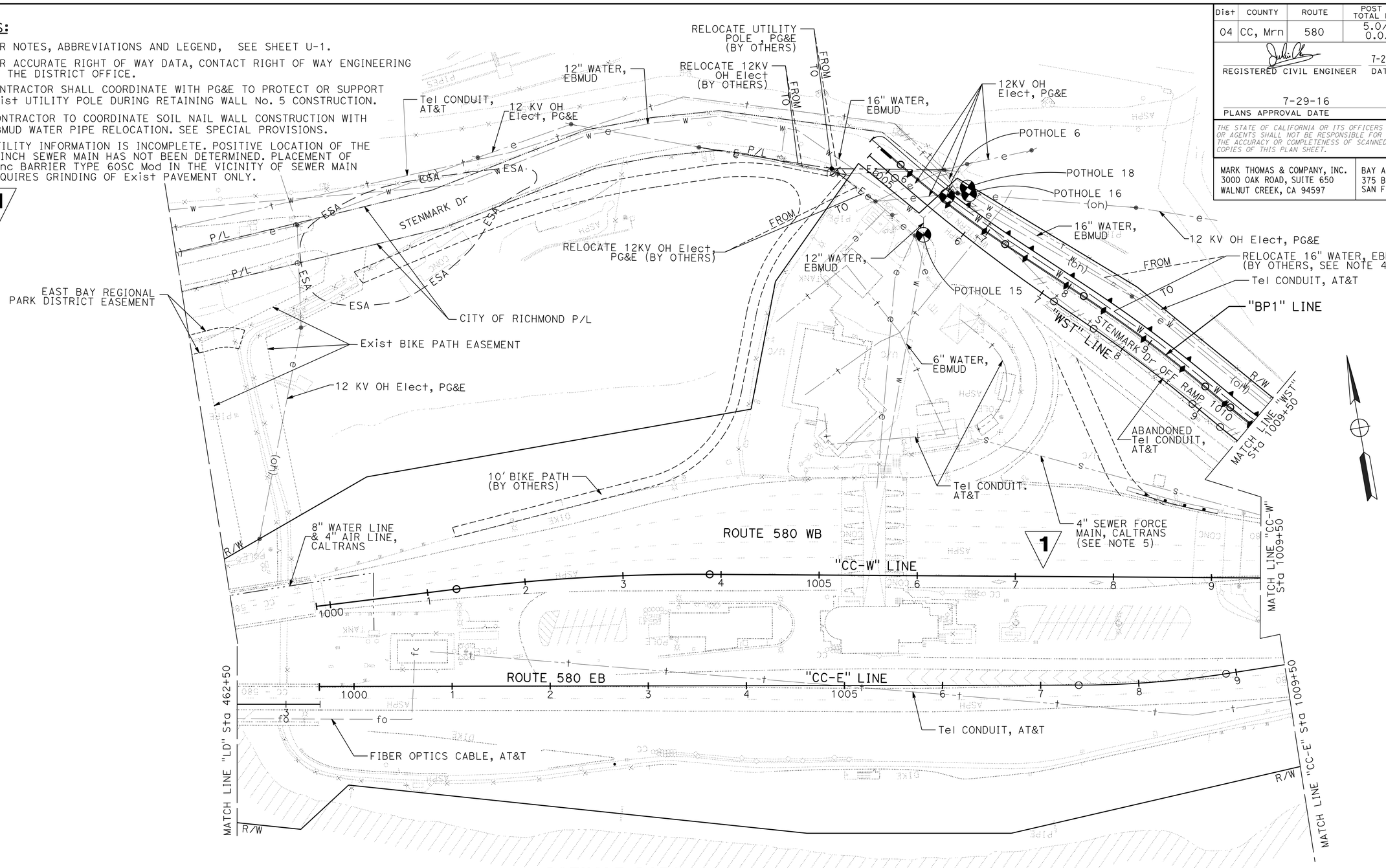

POTHOLE DATA

POTHOLE No.	OWNER	FACILITY	NORTHING	EASTING	GROUND Elev	TOP OF FACILITY Elev
6	EBMUD	12" WATER	2167914.509	6012907.494	50.12	45.95
15	EBMUD	12" WATER	2167879.918	6012876.907	50.33	48.50
16	EBMUD	16" WATER	2167912.462	6012929.992	58.98	55.65
18	AT&T	TELEPHONE	2167919.655	6012929.452	58.42	55.42

1 **REPLACED PER ADDENDUM No. 1 DATED SEPTEMBER 23, 2016**

APPROVED FOR UTILITY WORK ONLY

UTILITY PLAN

SCALE: 1" = 50'

U-20

REVISED BY	DATE REVISED
JHC	9-23-16
JHC	7-27-16

JULIA H. CHUANG — QUYNH NGUYEN — CALCULATED-DESIGNED BY — CHECKED BY

CONSULTANT FUNCTIONAL SUPERVISOR: SASHA DANSKY

STATE OF CALIFORNIA - DEPARTMENT OF TRANSPORTATION — Caltrans

LAST REVISION XX-XX-XX — DATE PLOTTED => 23-SEP-2016 — TIME PLOTTED => 11:20

Dist	COUNTY	ROUTE	POST MILES TOTAL PROJECT	SHEET No.	TOTAL SHEETS
04	CC, Mrn	580	5.0/7.8, 0.0/3.3	144	579

REGISTERED CIVIL ENGINEER 7-27-16 DATE

7-29-16
PLANS APPROVAL DATE

REGISTERED PROFESSIONAL ENGINEER JULIA H. CHUANG No. 72139 Exp. 6-30-18 CIVIL STATE OF CALIFORNIA

THE STATE OF CALIFORNIA OR ITS OFFICERS OR AGENTS SHALL NOT BE RESPONSIBLE FOR THE ACCURACY OR COMPLETENESS OF SCANNED COPIES OF THIS PLAN SHEET.

MARK THOMAS & COMPANY, INC.
3000 OAK ROAD, SUITE 650
WALNUT CREEK, CA 94597

BAY AREA TOLL AUTHORITY
375 BEALE STREET, SUITE 800
SAN FRANCISCO, CA 94105

NOTES:

1. FOR NOTES, ABBREVIATIONS AND LEGEND, SEE SHEET U-1.
2. FOR ACCURATE RIGHT OF WAY DATA, CONTACT RIGHT OF WAY ENGINEERING AT THE DISTRICT OFFICE.
3. CONTRACTOR SHALL COORDINATE WITH PG&E TO PROTECT OR SUPPORT Exist UTILITY POLE DURING RETAINING WALL No. 5 CONSTRUCTION.
4. CONTRACTOR TO COORDINATE SOIL NAIL WALL CONSTRUCTION WITH EBMUD WATER PIPE RELOCATION. SEE SPECIAL PROVISIONS.
5. CONTRACTOR TO INSTALL CONDUITS. PG&E CUT SERVICE AND PULL CONDUCTORS TO NEW LINE. SEE SPECIAL PROVISIONS AND SHEET U-25.
6. UTILITY INFORMATION IS INCOMPLETE. POSITIVE LOCATION OF THE 4-INCH SEWER MAIN HAS NOT BEEN DETERMINED. PLACEMENT OF Conc BARRIER TYPE 60SC Mod IN THE VICINITY OF SEWER MAIN REQUIRES GRINDING OF Exist PAVEMENT ONLY.

1

1

POTHOLE DATA

POTHOLE No.	OWNER	FACILITY	NORTHING	EASTING	GROUND Elev	TOP OF FACILITY Elev
7	EBMUD	16" WATER	2167551.661	6013334.888	37.72	33.55
17	EBMUD	16" WATER	2167613.871	6013224.283	51.89	49.30
19	AT&T	TELEPHONE	2167617.281	6013227.319	51.80	48.97
20	EBMUD	16" WATER	2167576.008	6013255.879	45.56	41.98
21	EBMUD	16" WATER	2167571.616	6013260.363	44.28	40.78

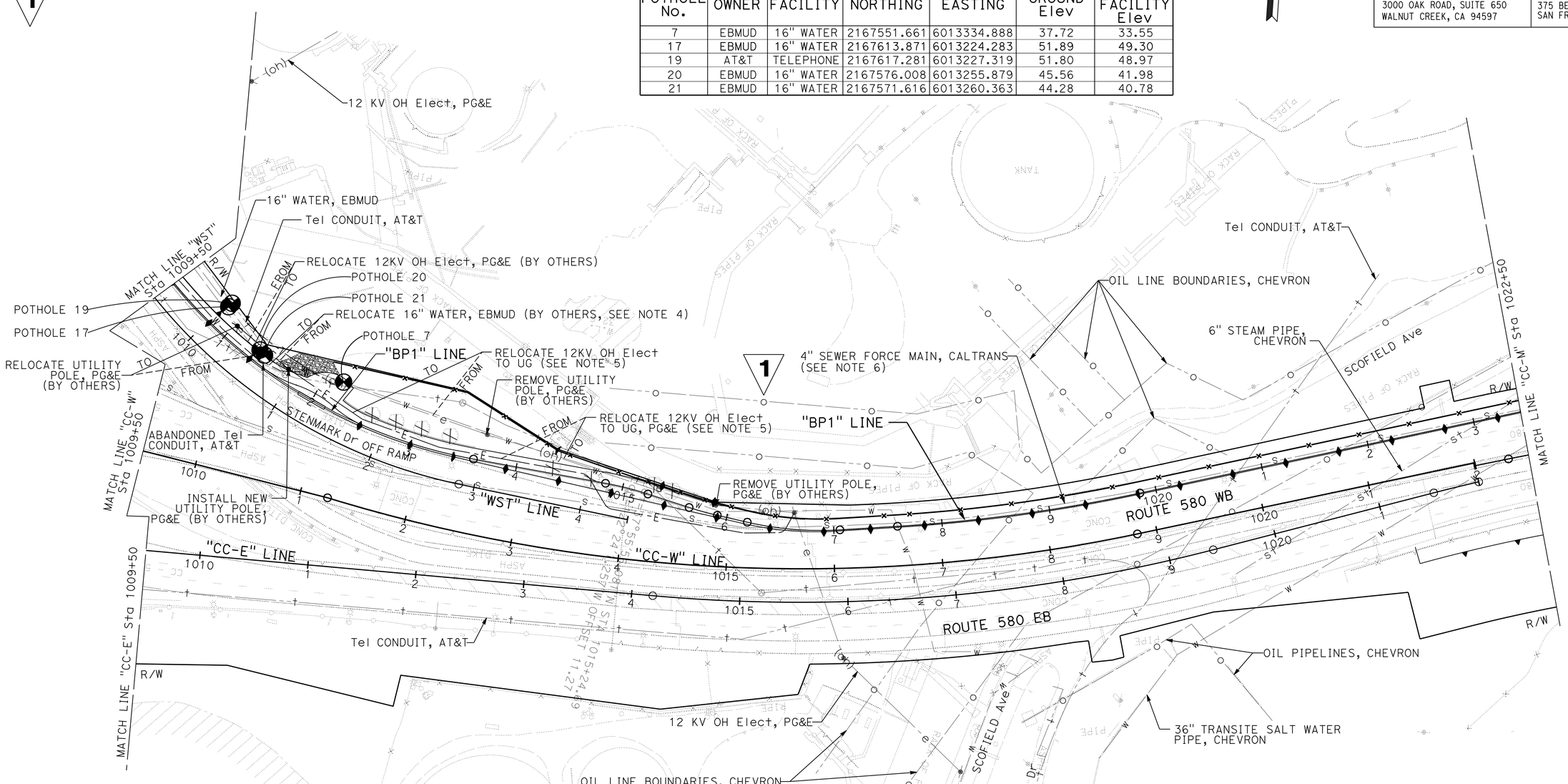

1 **REPLACED PER ADDENDUM No. 1 DATED SEPTEMBER 23, 2016**

APPROVED FOR UTILITY WORK ONLY

UTILITY PLAN

SCALE: 1" = 50'

U-21

REVISED BY	DATE REVISED
JHC	9-23-16
JHC	7-27-16

CALCULATED-DESIGNED BY: JULIA H. CHUANG
CHECKED BY: QUYNH NGUYEN
CONSULTANT FUNCTIONAL SUPERVISOR: SASHA DANSKY

STATE OF CALIFORNIA - DEPARTMENT OF TRANSPORTATION

Caltrans

LAST REVISION XX-XX-XX
DATE PLOTTED => 23-SEP-2016
TIME PLOTTED => 08:54

Dist	COUNTY	ROUTE	POST MILES TOTAL PROJECT	SHEET No.	TOTAL SHEETS
04	CC, Mrn	580	5.0/7.8, 0.0/3.3	145	579

REGISTERED CIVIL ENGINEER — DATE 7-27-16

PLANS APPROVAL DATE 7-29-16

REGISTERED PROFESSIONAL ENGINEER — JULIA H. CHUANG — No. 72139 — Exp. 6-30-18 — CIVIL — STATE OF CALIFORNIA

THE STATE OF CALIFORNIA OR ITS OFFICERS OR AGENTS SHALL NOT BE RESPONSIBLE FOR THE ACCURACY OR COMPLETENESS OF SCANNED COPIES OF THIS PLAN SHEET.

MARK THOMAS & COMPANY, INC.
3000 OAK ROAD, SUITE 650
WALNUT CREEK, CA 94597

BAY AREA TOLL AUTHORITY
375 BEALE STREET, SUITE 800
SAN FRANCISCO, CA 94105

NOTES:

1. FOR NOTES, ABBREVIATIONS AND LEGEND, SEE SHEET U-1.
2. FOR ACCURATE RIGHT OF WAY DATA, CONTACT RIGHT OF WAY ENGINEERING AT THE DISTRICT OFFICE.
3. ~~CONTRACTOR TO REMOVE AND DISPOSE OF STOCKPILE REFINERY PIPING.~~ CHEVRON TO RELOCATE EXISTING SECURITY CONDUITS. CONTRACTOR TO COORDINATE CONSTRUCTION OF TUNNEL EXTENSION, U-WALL STRUCTURE, AND RETAINING WALL No. 4 AND 7 WITH CHEVRON. SEE SPECIAL PROVISIONS. 1
4. UTILITY INFORMATION IS INCOMPLETE. POSITIVE LOCATION OF THE 4-INCH SEWER MAIN HAS NOT BEEN DETERMINED. PLACEMENT OF Conc BARRIER TYPE 60SC Mod IN THE VICINITY OF SEWER MAIN REQUIRES GRINDING OF Exist PAVEMENT ONLY. 1

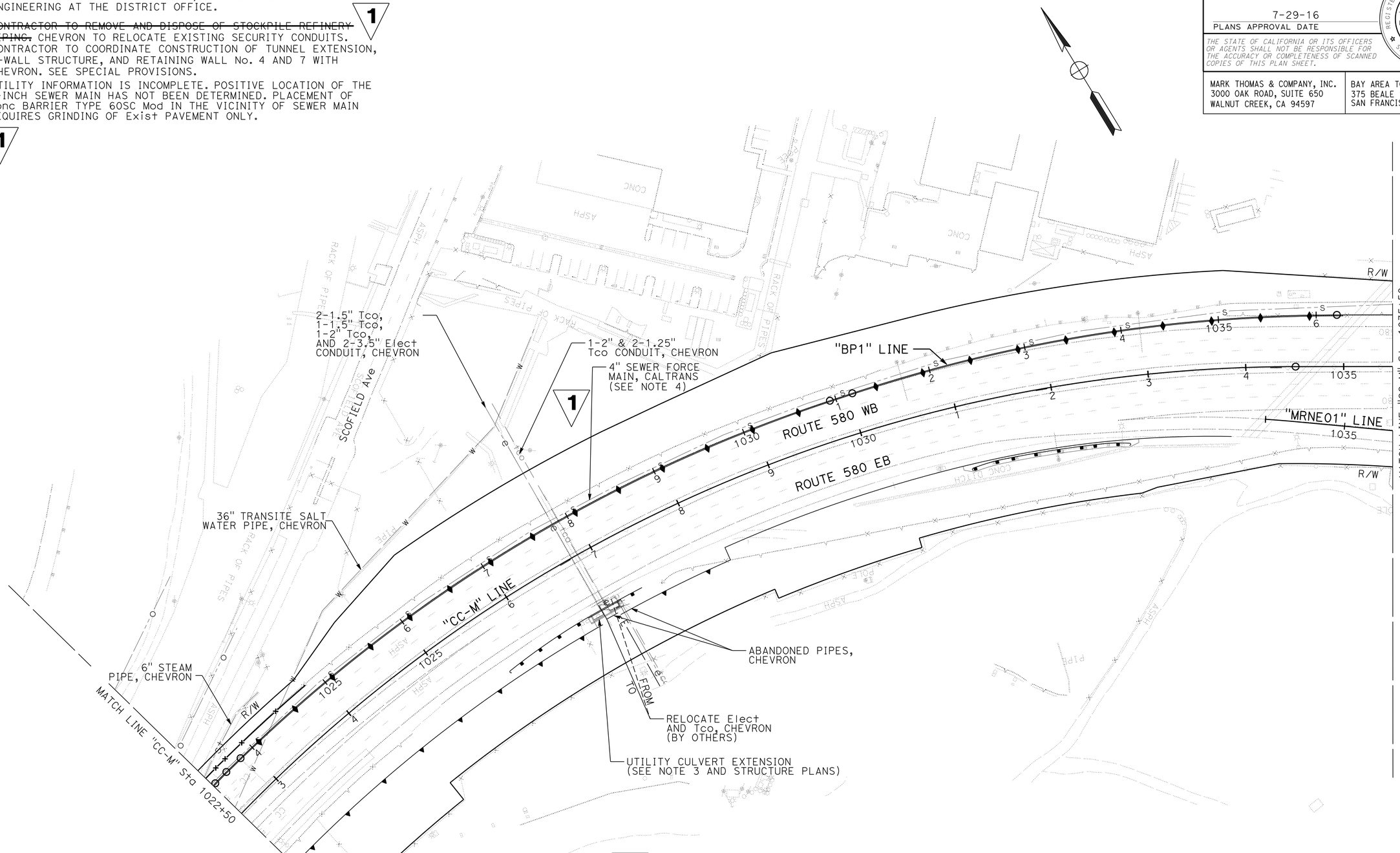

1 **REPLACED PER ADDENDUM No. 1 DATED SEPTEMBER 23, 2016**

UTILITY PLAN

SCALE: 1" = 50'

U-22

APPROVED FOR UTILITY WORK ONLY

STATE OF CALIFORNIA - DEPARTMENT OF TRANSPORTATION — Caltrans

CONSULTANT FUNCTIONAL SUPERVISOR: SASHA DANSKY

CALCULATED-DESIGNED BY: JULIA H. CHUANG — REVISED BY: JHC — DATE REVISED: 9-23-16

CHECKED BY: QUYNH NGUYEN — JHC — 7-27-16

LAST REVISION XX-XX-XX — DATE PLOTTED => 23-SEP-2016 — TIME PLOTTED => 08:54

Dist	COUNTY	ROUTE	POST MILES TOTAL PROJECT	SHEET No.	TOTAL SHEETS
04	CC, Mrn	580	5.0/7.8, 0.0/3.3	146	579

REGISTERED CIVIL ENGINEER 7-27-16 DATE

7-29-16
PLANS APPROVAL DATE

REGISTERED PROFESSIONAL ENGINEER JULIA H. CHUANG No. 72139 Exp. 6-30-18 CIVIL STATE OF CALIFORNIA

THE STATE OF CALIFORNIA OR ITS OFFICERS OR AGENTS SHALL NOT BE RESPONSIBLE FOR THE ACCURACY OR COMPLETENESS OF SCANNED COPIES OF THIS PLAN SHEET.

MARK THOMAS & COMPANY, INC.
3000 OAK ROAD, SUITE 650
WALNUT CREEK, CA 94597

BAY AREA TOLL AUTHORITY
375 BEALE STREET, SUITE 800
SAN FRANCISCO, CA 94105

NOTES:

1. FOR NOTES, ABBREVIATIONS AND LEGEND, SEE SHEET U-1.
2. FOR ACCURATE RIGHT OF WAY DATA, CONTACT RIGHT OF WAY ENGINEERING AT THE DISTRICT OFFICE.
3. UTILITY INFORMATION IS INCOMPLETE. POSITIVE LOCATION OF THE 4-INCH SEWER MAIN HAS NOT BEEN DETERMINED. PLACEMENT OF Conc BARRIER TYPE 60SC Mod IN THE VICINITY OF SEWER MAIN REQUIRES GRINDING OF Exist PAVEMENT ONLY.

1

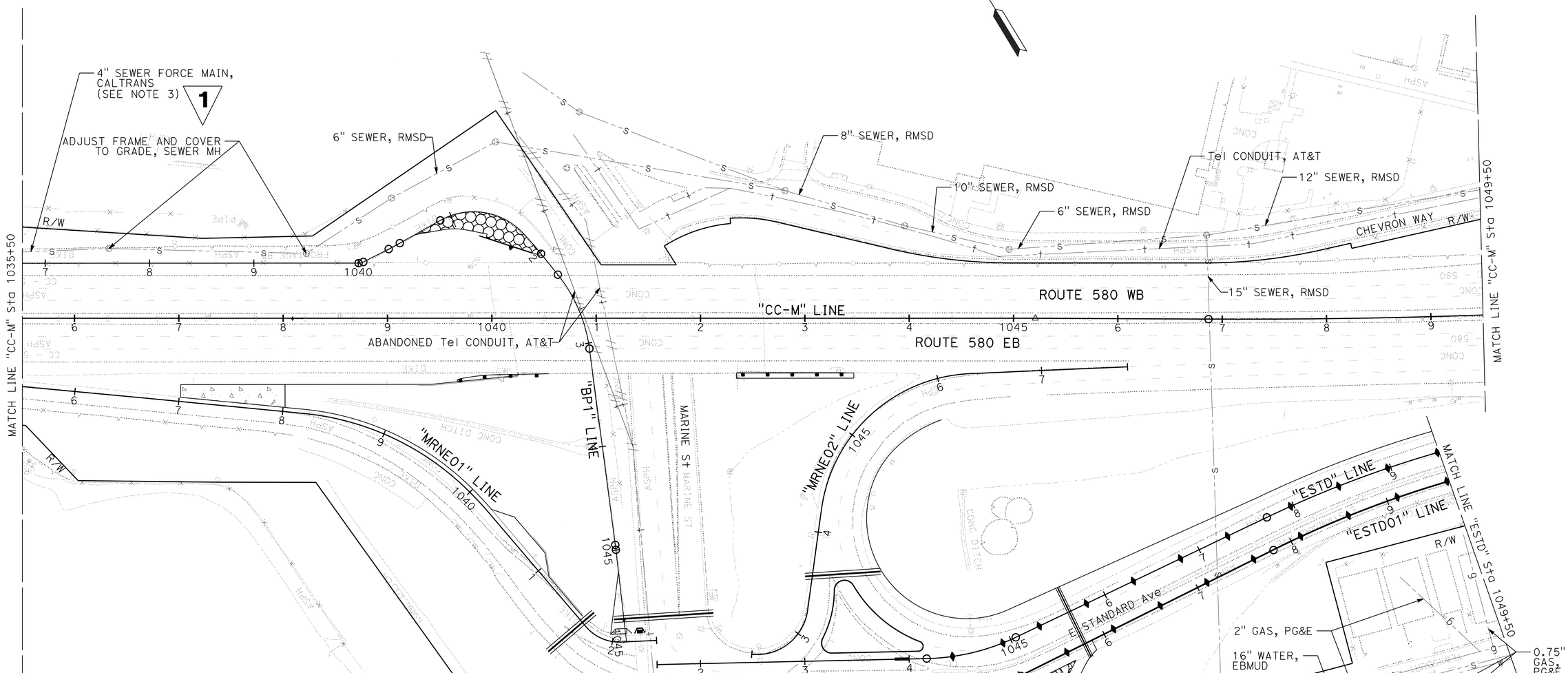

1 **REPLACED PER ADDENDUM No. 1 DATED SETPEMBER 23, 2016**

UTILITY PLAN

SCALE: 1" = 50'

APPROVED FOR UTILITY WORK ONLY

U-23

JHC	9-23-16		
JHC	7-27-16		
REVISED BY	DATE REVISED		
JULIA H. CHUANG	QUYNH NGUYEN		
CALCULATED-DESIGNED BY	CHECKED BY		
CONSULTANT FUNCTIONAL SUPERVISOR	SASHA DANSKY		
STATE OF CALIFORNIA - DEPARTMENT OF TRANSPORTATION	Caltrans		

LAST REVISION XX-XX-XX | DATE PLOTTED => 23-SEP-2016 | TIME PLOTTED => 08:54

Dist	COUNTY	ROUTE	POST MILES TOTAL PROJECT	SHEET No.	TOTAL SHEETS
04	CC, Mrn	580	5.0/7.8, 0.0/3.3	147A	579

REGISTERED CIVIL ENGINEER 8-24-16 DATE

9-14-16
PLANS APPROVAL DATE

REGISTERED PROFESSIONAL ENGINEER PETER T. ANASTOS No. C 36062 Exp. 6-30-18 CIVIL STATE OF CALIFORNIA

THE STATE OF CALIFORNIA OR ITS OFFICERS OR AGENTS SHALL NOT BE RESPONSIBLE FOR THE ACCURACY OR COMPLETENESS OF SCANNED COPIES OF THIS PLAN SHEET.

HNTB CORPORATION
1111 BROADWAY
9TH FLOOR
OAKLAND, CA 94607

BAY AREA TOLL AUTHORITY
375 BEALE STREET
SUITE 800
SAN FRANCISCO, CA 94105

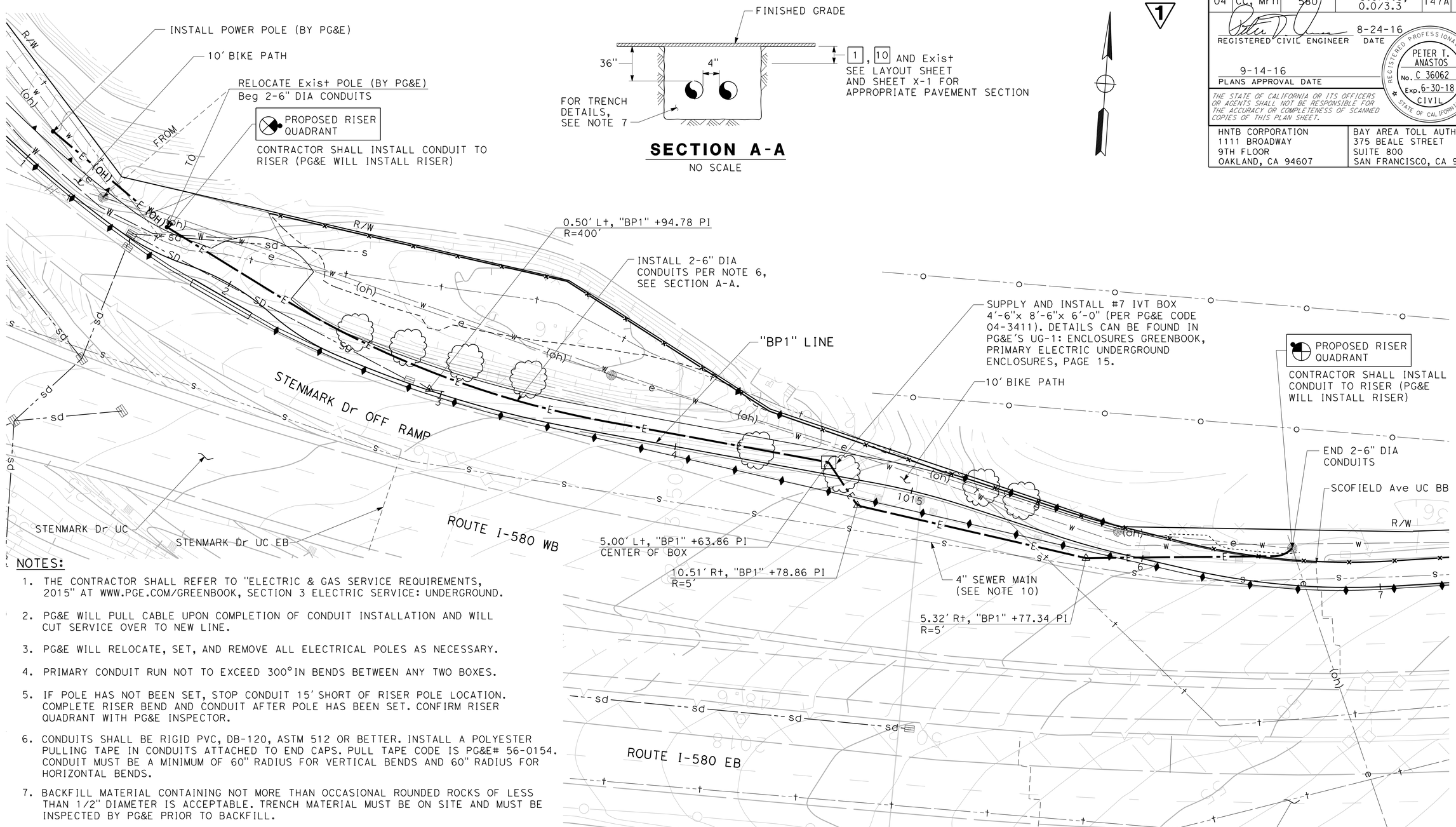

SECTION A-A
NO SCALE

PLAN
SCALE: 1" = 20'

NOTES:

1. THE CONTRACTOR SHALL REFER TO "ELECTRIC & GAS SERVICE REQUIREMENTS, 2015" AT WWW.PGE.COM/GREENBOOK, SECTION 3 ELECTRIC SERVICE: UNDERGROUND.
2. PG&E WILL PULL CABLE UPON COMPLETION OF CONDUIT INSTALLATION AND WILL CUT SERVICE OVER TO NEW LINE.
3. PG&E WILL RELOCATE, SET, AND REMOVE ALL ELECTRICAL POLES AS NECESSARY.
4. PRIMARY CONDUIT RUN NOT TO EXCEED 300°IN BENDS BETWEEN ANY TWO BOXES.
5. IF POLE HAS NOT BEEN SET, STOP CONDUIT 15' SHORT OF RISER POLE LOCATION. COMPLETE RISER BEND AND CONDUIT AFTER POLE HAS BEEN SET. CONFIRM RISER QUADRANT WITH PG&E INSPECTOR.
6. CONDUITS SHALL BE RIGID PVC, DB-120, ASTM 512 OR BETTER. INSTALL A POLYESTER PULLING TAPE IN CONDUITS ATTACHED TO END CAPS. PULL TAPE CODE IS PG&E# 56-0154. CONDUIT MUST BE A MINIMUM OF 60" RADIUS FOR VERTICAL BENDS AND 60" RADIUS FOR HORIZONTAL BENDS.
7. BACKFILL MATERIAL CONTAINING NOT MORE THAN OCCASIONAL ROUNDED ROCKS OF LESS THAN 1/2" DIAMETER IS ACCEPTABLE. TRENCH MATERIAL MUST BE ON SITE AND MUST BE INSPECTED BY PG&E PRIOR TO BACKFILL.
8. CONTRACTOR SHALL CONTACT PG&E UNDERGROUND INSPECTOR AT 510-231-2939, REFERENCE PM# 31207976 PRIOR TO STARTING CONDUIT WORK AND INSTALLATION OF UNDERGROUND STRUCTURES (BOXES) IF THERE ARE CONFLICTS WITH EXISTING LANDSCAPING (MOUNDS, TREES, BUSHES, ETC.).
9. SEE SHEET U-21 FOR ADDITIONAL INFORMATION.
10. POSITIVE LOCATION OF THE 4" SEWER MAIN HAS NOT BEEN DETERMINED.

1 REPLACED PER ADDENDUM No. 1 DATED SEPTEMBER 23, 2016

APPROVED FOR UTILITY WORK ONLY

UTILITY PLAN
PG&E ELECTRICAL UNDERGROUNDING
SCALE: AS SHOWN

U-25

REVISED BY	DATE REVISED
RdL	8-26-16

CALCULATED-DESIGNED BY: PETER ANASTOS
CHECKED BY: ANTHONY SILVA
CONSULTANT FUNCTIONAL SUPERVISOR: JAMES PUN

STATE OF CALIFORNIA - DEPARTMENT OF TRANSPORTATION
Caltrans

LAST REVISION 00-00-00
DATE PLOTTED => 9/23/2016
TIME PLOTTED => 10:19:57 AM

Dist	COUNTY	ROUTE	POST MILES TOTAL PROJECT	SHEET No.	TOTAL SHEETS
04	CC, Mrn	580	5.0/7.8, 0.0/3.3	147B	579

REGISTERED CIVIL ENGINEER 8-24-16 DATE

PETER T. ANASTOS No. C 36062 Exp. 6-30-18 CIVIL — REGISTERED PROFESSIONAL ENGINEER — STATE OF CALIFORNIA

9-14-16
PLANS APPROVAL DATE

THE STATE OF CALIFORNIA OR ITS OFFICERS OR AGENTS SHALL NOT BE RESPONSIBLE FOR THE ACCURACY OR COMPLETENESS OF SCANNED COPIES OF THIS PLAN SHEET.

HNTB CORPORATION
1111 BROADWAY
9TH FLOOR
OAKLAND, CA 94607

BAY AREA TOLL AUTHORITY
375 BEALE STREET
SUITE 800
SAN FRANCISCO, CA 94105

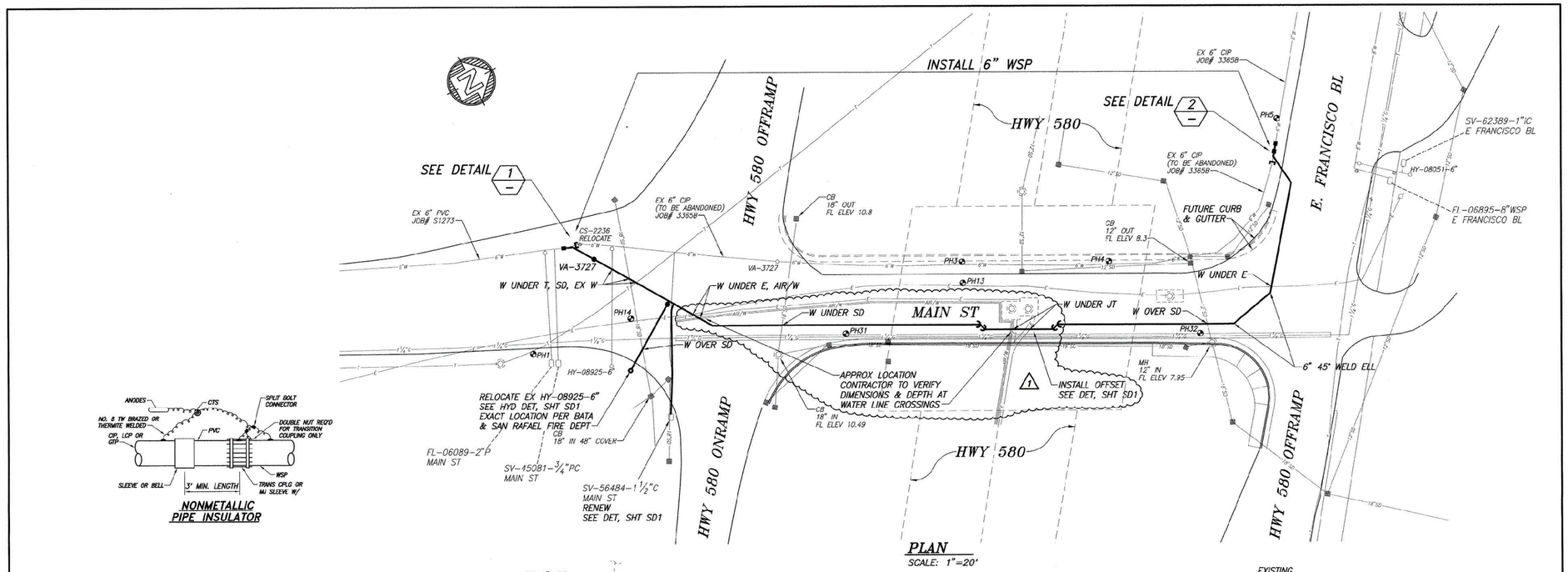

PLAN
SCALE: 1"=20'

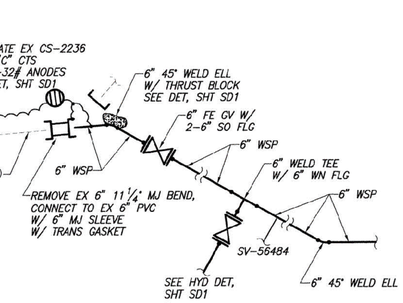

DETAIL 1
SCALE: N.T.S.

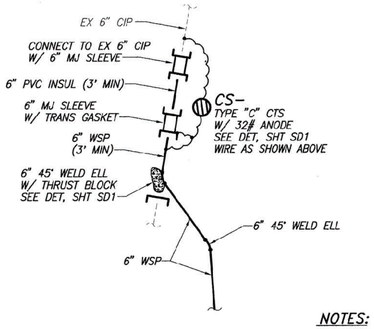

DETAIL 2
SCALE: N.T.S.

NONMETALLIC PIPE INSULATOR

POTHOLE DATA (PER BATA)

POTHOLE NO.	OWNER	FACILITY	NORTHING	EASTING	GROUND ELEV	TOP OF FACILITY ELEV
1	AT&T	TELEPHONE	2171869.203	5990549.627	16.04	13.29
3	MMWD	6" WATER	2172041.910	5990601.924	13.84	10.43
4	MMWD	6" WATER	2172095.009	5990630.734	13.82	10.32
5	MMWD	6" WATER	2172185.985	5990612.389	14.81	11.48
13	PG&E	ELECTRIC	2172038.711	5990608.286	12.81	10.98
14	PG&E	2" GAS	2171910.865	5990556.712	15.26	12.10
	PG&E	ELECTRIC	2171910.865	5990556.712	15.26	13.10
31	PG&E	1.25" GAS IN 10" CASING	2171985.821	5990605.070	13.46	11.46
32	PG&E	1.25" GAS IN 10" CASING	2172114.067	5990675.217	12.40	10.65

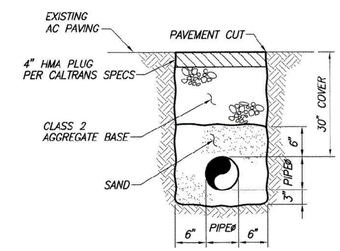

TYP TRENCH DETAIL
SCALE: N.T.S.

NOTES:
1. SOME MATERIALS WILL BE FURNISHED BY MARIN MUNICIPAL WATER DISTRICT. SEE SPECIAL PROVISIONS FOR THE LIST OF MATERIAL PROVIDED AND THE LOCATION FOR PICK-UP.
2. WATERLINE RELOCATION SHOWN IS A PRELIMINARY LAYOUT. SEE SPECIAL PROVISIONS FOR CONTRACTOR RESPONSIBILITIES TO FINALIZE ALIGNMENT AND PROFILE.
3. TYPICAL TRENCH DETAIL SHOWS THE MINIMUM SECTION. INCREASES IN DEPTH WILL BE MADE UP BY THE CLASS 2 AGGREGATE BASE.
4. SEE SHEET U-4 FOR ADDITIONAL INFORMATION.

NOTES:
1. STORM DRAIN ELEVATIONS PER DRAINAGE PROFILES DP-1
2. UNDERGROUND UTILITIES PER UTILITY PLAN U-4
3. BATA – BAY AREA TOLL AUTHORITY

20' 0 20' 40'
SCALE: 1"= 20'

NO	REVISION	DRAWN	CHKD	APPRVD	DATE
	/S INDICATES SIGNATURE				
1	ADDED UTILITIES	DAW		SO	8/17/16

ENGINEERING SEAL — REGISTERED PROFESSIONAL ENGINEER MOHSIN ZABIHOLLAH No. C 68062 EXPIRES 6-30-18 CIVIL STATE OF CALIFORNIA

SCALE	AS SHOWN	DESIGN: DRAWN BY	DAW
CADD FILE	R17004C01	DESIGN: DESIGN BY	WZ
CONTRACT NO.	1819	DESIGN: CHECKED BY	
DWG DATE	JULY 2016	RECOM'D: PROJ. MGR.	
SIGN DATE	8.17.16	RECOM'D: PRINCIPAL ENGR.	
CONST COM DATE			
APPROVED CHIEF ENGR.	MB		

REVIEW	
PLANNING	CG/S
CIVIL DESIGN	EA/S
OPERATIONS	EW/S
CORROSION	GA/S
M&E/CNTRLS	
FAC/WTR MGT	RM/S
ENGR SERV	PM/S
INSPECTION	DP/S
WTR QUALITY	PS/S
RECORDS/SUBD.	CL/S

MARIN MUNICIPAL WATER DISTRICT
220 NELLEN AVE., CORTE MADERA, CA 94925 (415) 945-1455

SAN RAFAEL
MAIN ST
PIPELINE RELOCATION PROJECT

C1 — 1 2 — SHEET NO.
JOB NO. R17004

R17004C01.dwg 8/17/16 12:33 PM

1 **REPLACED PER ADDENDUM No. 1 DATED SEPTEMBER 23, 2016**

UTILITY PLAN
MMWD WATERLINE RELOCATION
NO SCALE

APPROVED FOR UTILITY WORK ONLY

U-26

STATE OF CALIFORNIA - DEPARTMENT OF TRANSPORTATION — Caltrans

CONSULTANT FUNCTIONAL SUPERVISOR: JAMES PUN
CALCULATED-DESIGNED BY: PETER ANASTOS
CHECKED BY: ANTHONY SILVA
REVISED BY: RdL
DATE REVISED: 8-26-16

LAST REVISION 00-00-00 | DATE PLOTTED => 9/23/2016 | TIME PLOTTED => 10:19:58 AM

Dist	COUNTY	ROUTE	POST MILES TOTAL PROJECT	SHEET No.	TOTAL SHEETS
04	CC, Mrn	580	5.0/7.8, 0.0/3.3	147C	579

REGISTERED CIVIL ENGINEER 8-24-16 DATE

9-14-16
PLANS APPROVAL DATE

REGISTERED PROFESSIONAL ENGINEER PETER T. ANASTOS No. C 36062 Exp. 6-30-18 CIVIL STATE OF CALIFORNIA

THE STATE OF CALIFORNIA OR ITS OFFICERS OR AGENTS SHALL NOT BE RESPONSIBLE FOR THE ACCURACY OR COMPLETENESS OF SCANNED COPIES OF THIS PLAN SHEET.

HNTB CORPORATION
1111 BROADWAY
9TH FLOOR
OAKLAND, CA 94607

BAY AREA TOLL AUTHORITY
375 BEALE STREET
SUITE 800
SAN FRANCISCO, CA 94105

1

NOTES:
1. AN OFFSET IS REQUIRED WHEN CROSSING A UTILITY WILL RESULT IN THE WATER LINE HAVING A COVER GREATER THAN 5'-0".
2. PRIME AND WRAP ALL BARE METAL.

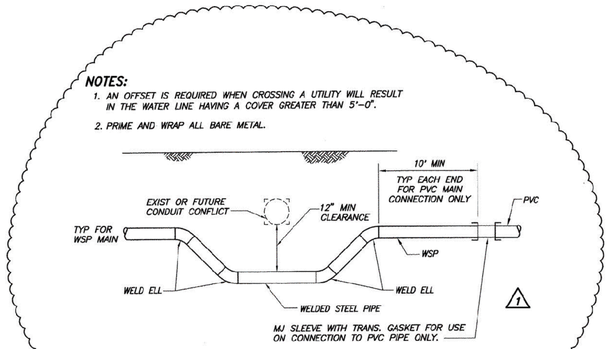

OFFSET

NO SCALE	FILE NO. SD0002	APPROV. BY: JM	REV. DATE: MAY '08

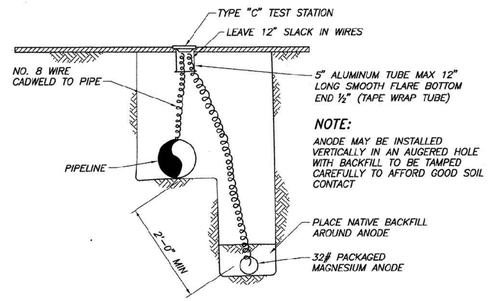

NOTE:
ANODE MAY BE INSTALLED VERTICALLY IN AN AUGERED HOLE WITH BACKFILL TO BE TAMPED CAREFULLY TO AFFORD GOOD SOIL CONTACT

TEST STATION WITH MAGNESIUM ANODE

NO SCALE	FILE NO. SD0009	APPROV. BY: RKT	REV. DATE: 5-12-95

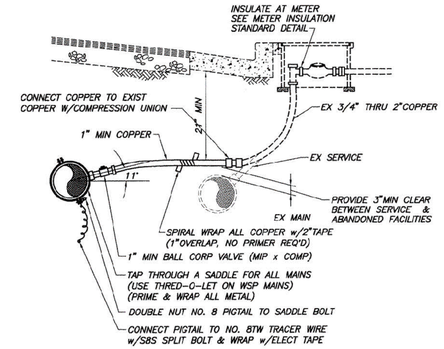

TRANSFERRING A 1" THRU 2" "LONG" COPPER SERVICE

NO SCALE	FILE NO. SD0022	APPROV. BY: RKT	REV. DATE: 6/15/99

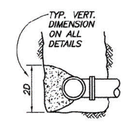

ELEVATION TEE

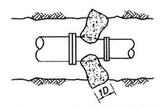

PLAN OF REDUCER

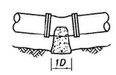

PLAN OF 11 1/4° BEND

PLAN OF TEE

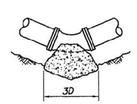

PLAN OF 45° BEND

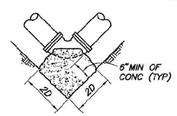

PLAN OF 90° BEND

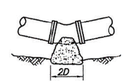

PLAN OF 22 1/2° BEND

NOTES:
1. ALL CONCRETE BLOCKING TO BE SET AGAINST UNDISTURBED GROUND. "D" INDICATES NOMINAL PIPE DIA. BLOCK SIZE BASED ON 3000 LBS/SQ FT SOIL. IF BEARING VALUE OF SOIL IS LESS, THE "D" VALUE SHALL BE INCREASED ACCORDINGLY. MINIMUM BLOCK DIMENSION SHALL BE 1 FOOT SQUARE.
2. THIS DETAIL WILL APPLY TO ALL PUSH-ON, FLEXIBLE OR OTHERWISE UNRESTRAINED JOINTS. ALSO APPLIES TO WELDED STEEL WHEN USED IN CONNECTION WITH FLEXIBLE JOINTS.
3. FITTINGS SHALL BE PRIMED AND WRAPPED PRIOR TO INSTALLATION OF CONCRETE BLOCKS.
4. CONCRETE SHALL NOT BE PLACED ON, OR AROUND BELLS OR BOLTS.

JOINT BLOCKING

NO SCALE	FILE NO. SD0017	APPROV. BY: RKT	REV. DATE: 5-12-95

NOTES:
1. HYDRANT LOCATION IN RELATION TO THE CURB AND SIDEWALK MUST BE DETERMINED BY THE CONTROLLING FIRE MARSHAL.
2. PRIME AND WRAP HYDRANT BURY, RISER(S), FLANGES & ALL BARE METAL UP TO BOTTOM OF HYDRANT FLANGE.

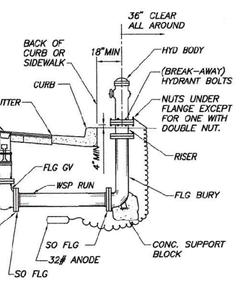

HYDRANT

NO SCALE	FILE NO. SD0003	APPROV. BY: KMcD	REV. DATE: 10-5-12

NO	REVISION	DRAWN	CHKD	APPRVD	DATE
	/S INDICATES SIGNATURE				
1	ADDED OFFSET DETAIL SD0002	DAW			9/23/16

ENGINEERING SEAL: REGISTERED PROFESSIONAL ENGINEER DOUGLAS ZABOROSKI No. C 66062 6-30-18 EXPIRES CIVIL STATE OF CALIFORNIA

SCALE	AS SHOWN	DRAWN BY	DAW
CADD FILE	R17004SD1	DESIGN BY	WZ
CONTRACT NO.	1819	CHECKED BY	
DWG DATE	JULY 2016	PROJ. MGR.	
SIGN DATE	8-17-16	PRINCIPAL ENGR.	
CONST COM DATE			
APPROVED CHIEF ENGR.	MB		

REVIEW	
PLANNING	CG/S
CIVIL DESIGN	FA/S
OPERATIONS	EW/S
CORROSION	GA/S
M&E/CNTRLS	
FAC/WTR MGT	RM/S
ENGR SERV	PM/S
INSPECTION	DP/S
WTR QUALITY	PS/S
RECORDS/SUBD.	CL/S

MARIN MUNICIPAL WATER DISTRICT
220 NELLEN AVE., CORTE MADERA, CA 94925 (415) 945-1455

SAN RAFAEL
MAIN ST
PIPELINE RELOCATION PROJECT

STANDARD DETAILS

SD1 2 2
SHEET NO.
JOB NO. R17004

R17004001.dwg 8/17/16 12:34 PM

1 **REPLACED PER ADDENDUM No. 1 DATED SEPTEMBER 23, 2016**

APPROVED FOR UTILITY WORK ONLY

UTILITY PLAN
MMWD WATERLINE RELOCATION
NO SCALE

U-27

STATE OF CALIFORNIA - DEPARTMENT OF TRANSPORTATION
Caltrans®
CONSULTANT FUNCTIONAL SUPERVISOR: JAMES PUN
CALCULATED-DESIGNED BY: PETER ANASTOS
CHECKED BY: ANTHONY SILVA
REVISED BY: RdL
DATE REVISED: 8-26-16

LAST REVISION 00-00-00
DATE PLOTTED => 9/23/2016
TIME PLOTTED => 10:20:01 AM

Dist	COUNTY	ROUTE	POST MILES TOTAL PROJECT	SHEET No.	TOTAL SHEETS
04	CC, Mrn	580	5.0/7.8, 0.0/3.3	149	579

REGISTERED CIVIL ENGINEER — DATE 7-27-16

PLANS APPROVAL DATE 7-29-16

REGISTERED PROFESSIONAL ENGINEER JULIA H. CHUANG No. 72139 Exp. 6-30-18 CIVIL STATE OF CALIFORNIA

THE STATE OF CALIFORNIA OR ITS OFFICERS OR AGENTS SHALL NOT BE RESPONSIBLE FOR THE ACCURACY OR COMPLETENESS OF SCANNED COPIES OF THIS PLAN SHEET.

MARK THOMAS & COMPANY, INC.
3000 OAK ROAD, SUITE 650
WALNUT CREEK, CA 94597

BAY AREA TOLL AUTHORITY
375 BEALE STREET, SUITE 800
SAN FRANCISCO, CA 94105

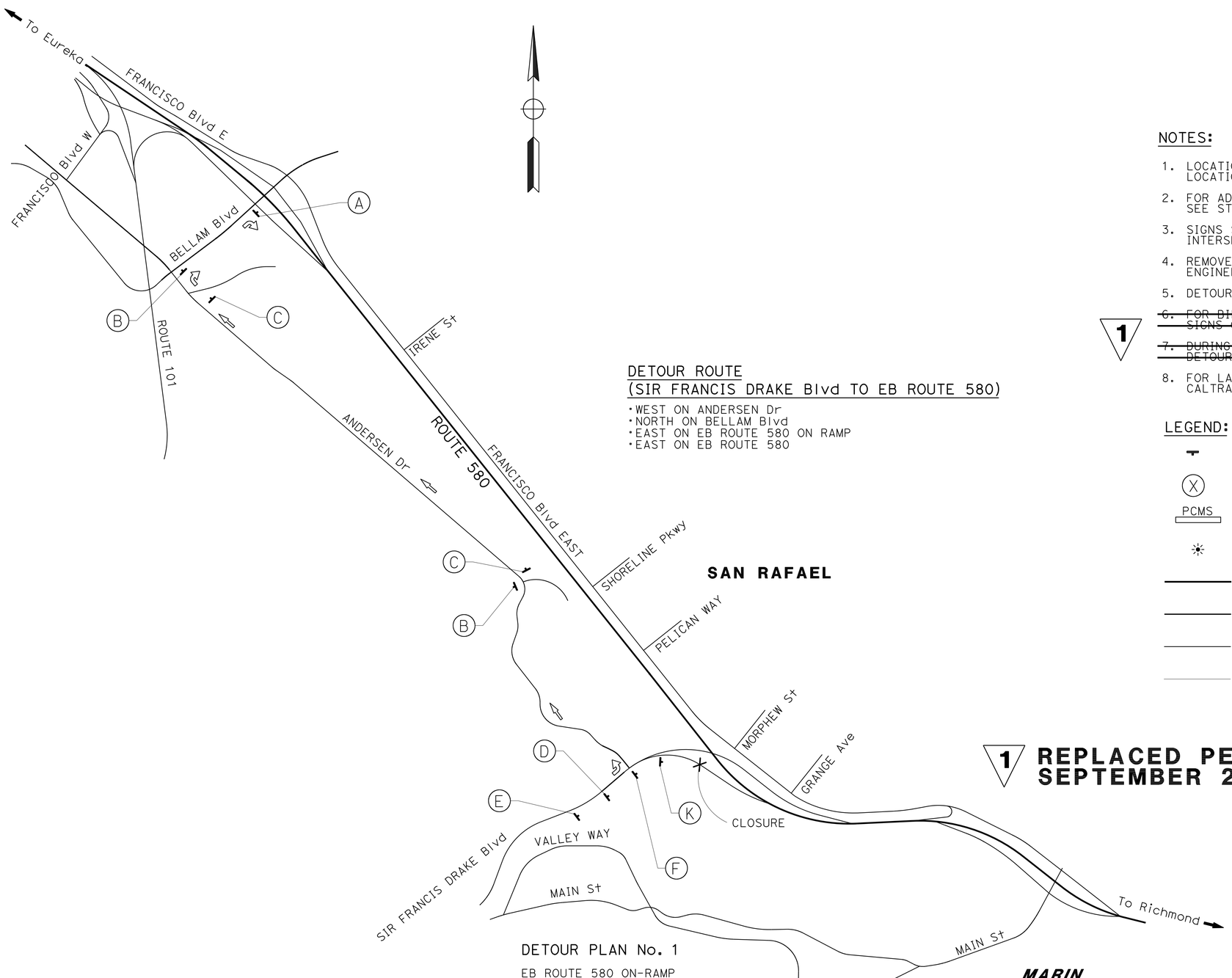

DETOUR PLAN No. 1
EB ROUTE 580 ON-RAMP
FROM SIR FRANCIS DRAKE Blvd CLOSURE

DETOUR ROUTE
(SIR FRANCIS DRAKE Blvd TO EB ROUTE 580)

- WEST ON ANDERSEN Dr
- NORTH ON BELLAM Blvd
- EAST ON EB ROUTE 580 ON RAMP
- EAST ON EB ROUTE 580

NOTES:

1. LOCATION OF CONSTRUCTION AREA SIGNS ARE APPROXIMATE. EXACT LOCATION TO BE DETERMINED BY THE ENGINEER.
2. FOR ADDITIONAL STATIONARY MOUNTED CONSTRUCTION AREA SIGNS, SEE STAGE CONSTRUCTION AND TRAFFIC HANDLING PLANS.
3. SIGNS SHALL BE APPROXIMATELY 50 FEET AWAY FROM THE INTERSECTION.
4. REMOVE OR COVER ALL CONFLICTING SIGNING AS DIRECTED BY THE ENGINEER.
5. DETOUR SIGNS SHALL BE COVERED WHEN NOT IN USE.
6. ~~FOR BIKE SHUTTLE PICK UP AND DROP OFF, SEE Temp BIKE SHUTTLE SIGNS ON SHEET CS-1.~~ 1
7. ~~DURING BICYCLE ROUTE CLOSURE, CONTRACTOR SHALL PROVIDE BICYCLE DETOUR ROUTE APPROVED BY THE ENGINEER OR BIKE SHUTTLE.~~
8. FOR LANE CLOSURE AND RAMP CLOSURE DETAILS NOT SHOWN, SEE CALTRANS Std PLAN RSP T9, RSP T10, RSP T10A AND RSP T14.

LEGEND:

- CONSTRUCTION AREA SIGN
- (X) CONSTRUCTION AREA SIGN NUMBER (SEE SHEET MIQ-1)
- PCMS PORTABLE CHANGEABLE MESSAGE SIGN
- FLASHING BEACON (PORTABLE)
- INTERSTATE/STATE ROUTE
- FOUR LANE STREET
- TWO LANE STREET
- BIKE PATH

1 **REPLACED PER ADDENDUM No. 1 DATED SEPTEMBER 23, 2016**

APPROVED FOR MOTORIST INFORMATION WORK ONLY

MOTORIST INFORMATION PLAN
NO SCALE

MI-1

JHC	9-23-16		
JHC	7-27-16	REVISED BY	DATE REVISED
JULIA H. CHUANG		CALCULATED-DESIGNED BY	
QUYNH NGUYEN		CHECKED BY	
SASHA DANSKY		CONSULTANT FUNCTIONAL SUPERVISOR	

STATE OF CALIFORNIA - DEPARTMENT OF TRANSPORTATION
Caltrans

LAST REVISION XX-XX-XX | DATE PLOTTED => 23-SEP-2016 | TIME PLOTTED => 08:55

Dist	COUNTY	ROUTE	POST MILES TOTAL PROJECT	SHEET No.	TOTAL SHEETS
04	CC, Mrn	580	5.0/7.8, 0.0/3.3	177A	579

REGISTERED CIVIL ENGINEER — DATE 9-2-16

PLANS APPROVAL DATE 9-14-16

REGISTERED PROFESSIONAL ENGINEER JULIA H. CHUANG No. 72139 Exp. 6-30-18 CIVIL STATE OF CALIFORNIA

THE STATE OF CALIFORNIA OR ITS OFFICERS OR AGENTS SHALL NOT BE RESPONSIBLE FOR THE ACCURACY OR COMPLETENESS OF SCANNED COPIES OF THIS PLAN SHEET.

MARK THOMAS & COMPANY, INC.
3000 OAK ROAD, SUITE 650
WALNUT CREEK, CA 94597

BAY AREA TOLL AUTHORITY
375 BEALE STREET, SUITE 800
SAN FRANCISCO, CA 94105

1

STAGE 4 CONSTRUCTION:

(1) CONSTRUCT ARCHITECTURAL TREAMENT FOR RW No. 4 AND 7

STAGE 4 TRAFFIC:

1. SHIFT WB ROUTE 580 TRAFFIC WITH FINAL STRIPING
2. SHIFT EB ROUTE 580 TRAFFIC WITH FINAL STRIPING
3. SHIFT EB ROUTE 580 MARINE St OFF RAMP TRAFFIC WITH FINAL STRIPING

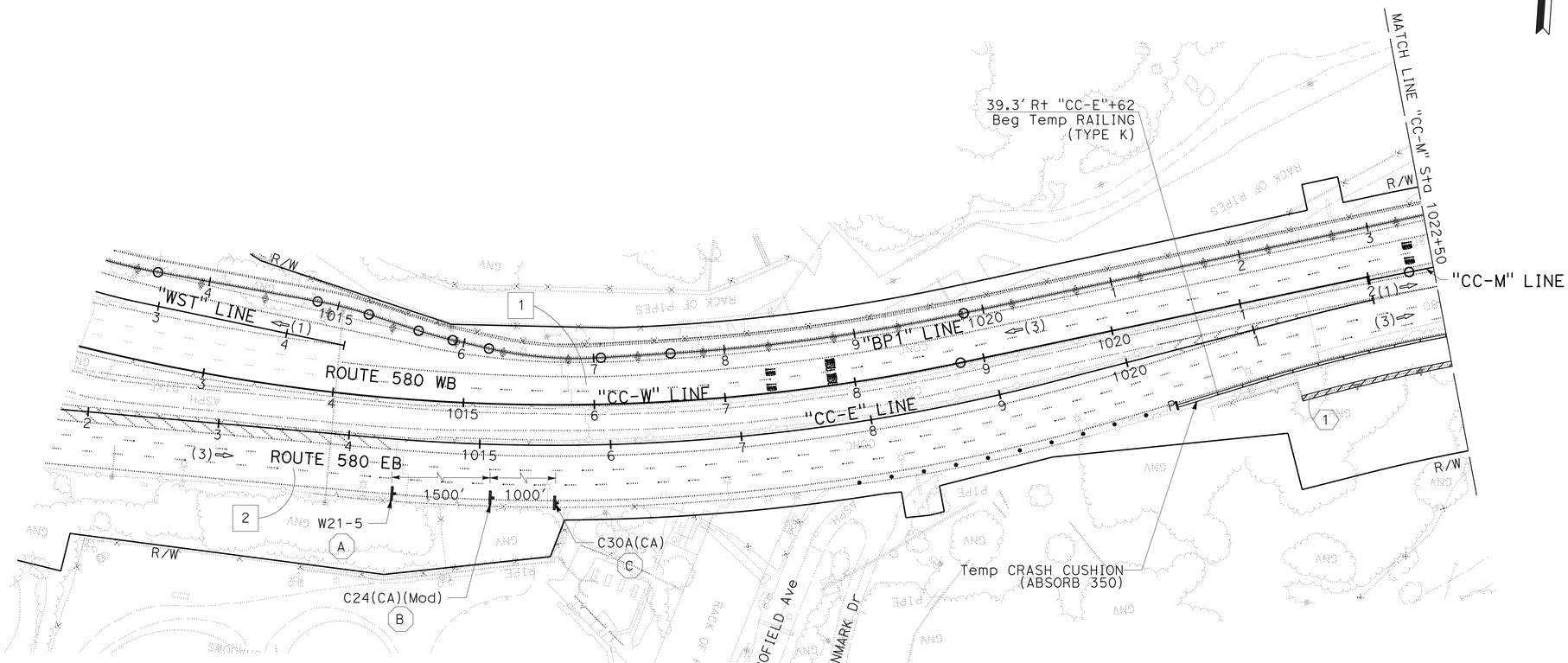

1 **NEW SHEET PER ADDENDUM No. 1 DATED SEPTEMBER 23, 2016**

STAGE CONSTRUCTION AND TRAFFIC HANDLING PLAN

STAGE 4

SCALE: 1" = 50'

SC-20

APPROVED FOR STAGE CONSTRUCTION AND TRAFFIC HANDLING WORK ONLY

STATE OF CALIFORNIA - DEPARTMENT OF TRANSPORTATION

Caltrans

CONSULTANT FUNCTIONAL SUPERVISOR: SASHA DANSKY

CALCULATED-DESIGNED BY: JULIA H. CHUANG — REVISED BY: JHC

CHECKED BY: QUYNH NGUYEN — DATE REVISED: 9-23-16

LAST REVISION: XX-XX-XX — DATE PLOTTED => 23-SEP-2016 — TIME PLOTTED => 08:55

Dist	COUNTY	ROUTE	POST MILES TOTAL PROJECT	SHEET No.	TOTAL SHEETS
04	CC, Mrn	580	5.0/7.8, 0.0/3.3	177B	579

REGISTERED CIVIL ENGINEER — DATE 9-2-16

PLANS APPROVAL DATE 9-14-16

REGISTERED PROFESSIONAL ENGINEER JULIA H. CHUANG No. 72139 Exp. 6-30-18 CIVIL STATE OF CALIFORNIA

THE STATE OF CALIFORNIA OR ITS OFFICERS OR AGENTS SHALL NOT BE RESPONSIBLE FOR THE ACCURACY OR COMPLETENESS OF SCANNED COPIES OF THIS PLAN SHEET.

MARK THOMAS & COMPANY, INC.
3000 OAK ROAD, SUITE 650
WALNUT CREEK, CA 94597

BAY AREA TOLL AUTHORITY
375 BEALE STREET, SUITE 800
SAN FRANCISCO, CA 94105

1

NOTES:

1. FOR CONSTRUCTION AND TRAFFIC ITEMS RELATED TO THIS STAGE, SEE SHEET SC-20.
2. FOR ACCURATE RIGHT OF WAY DATA, CONTACT RIGHT OF WAY ENGINEERING AT THE DISTRICT OFFICE.

SECTION A-A
NO SCALE

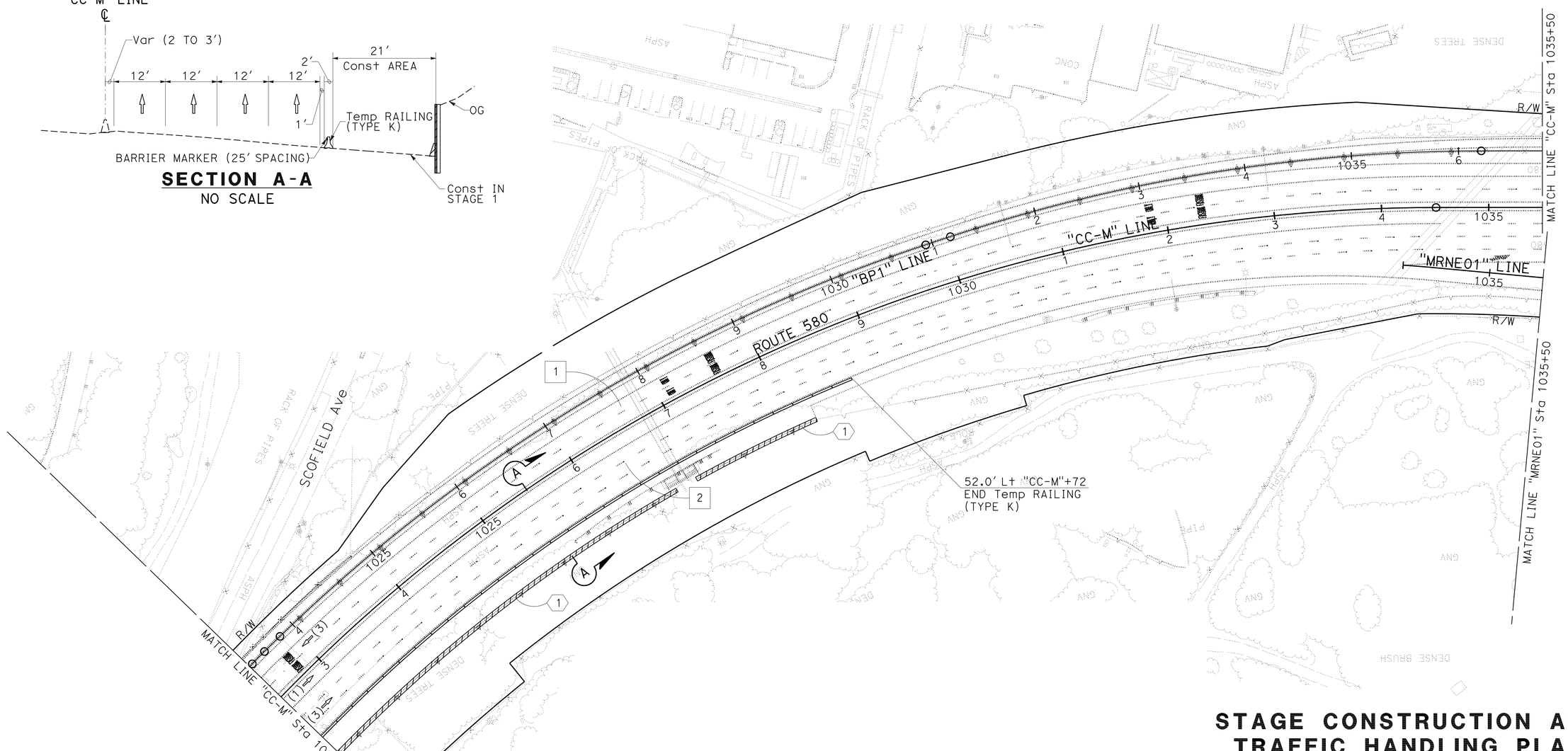

1 NEW SHEET PER ADDENDUM No. 1 DATED SEPTEMBER 23, 2016

STAGE CONSTRUCTION AND TRAFFIC HANDLING PLAN

STAGE 4

SCALE: 1" = 50'

SC-21

STATE OF CALIFORNIA - DEPARTMENT OF TRANSPORTATION
Caltrans

CONSULTANT FUNCTIONAL SUPERVISOR: SASHA DANSKY
CALCULATED-DESIGNED BY: JULIA H. CHUANG — REVISED BY: JHC
CHECKED BY: QUYNH NGUYEN — DATE REVISED: 9-23-16

LAST REVISION XX-XX-XX — DATE PLOTTED => 23-SEP-2016 — TIME PLOTTED => 08:55

Dist	COUNTY	ROUTE	POST MILES TOTAL PROJECT	SHEET No.	TOTAL SHEETS
04	CC, Mrn	580	5.0/7.8, 0.0/3.3	179	579

REGISTERED CIVIL ENGINEER 7-27-16 DATE

7-29-16
PLANS APPROVAL DATE

REGISTERED PROFESSIONAL ENGINEER JULIA H. CHUANG No. 72139 Exp. 6-30-18 CIVIL STATE OF CALIFORNIA

THE STATE OF CALIFORNIA OR ITS OFFICERS OR AGENTS SHALL NOT BE RESPONSIBLE FOR THE ACCURACY OR COMPLETENESS OF SCANNED COPIES OF THIS PLAN SHEET.

MARK THOMAS & COMPANY, INC.
3000 OAK ROAD, SUITE 650
WALNUT CREEK, CA 94597

BAY AREA TOLL AUTHORITY
375 BEALE STREET, SUITE 800
SAN FRANCISCO, CA 94105

CONSTRUCTION AREA SIGNS (STATIONARY MOUNTED)

STAGE No.	SIGN LETTER (A)	SIGN CODE FEDERAL	SIGN CODE CALIFORNIA	SIGN MESSAGE	PANEL SIZE L x D in x in	NUMBER OF POST AND POST SIZE EA - in x in	No. OF SIGN (N) EA
2	A	R9-11(R†)		SIDEWALK CLOSED AHEAD, CROSS HERE (RIGHT)	24 x 18	N/A	1
	B	M4-9b(L†)		PEDESTRIAN DETOUR (LEFT)	30 x 24	N/A	1
	C	R9-11(L†)		SIDEWALK CLOSED AHEAD, CROSS HERE (LEFT)	24 x 18	N/A	1
	D	R1-1		STOP	36 x 36	1 - 4" x 6"	1
	E	M4-9a(L†)		BIKE/PEDESTRIAN DETOUR (LEFT)	30 x 24	N/A	1
	F	R1-5		YIELD HERE TO PEDESTRIANS	36 x 36	1 - 4" x 6"	1
	G	W11-2		PEDESTRIAN	36 x 36	1 - 4" x 6"	1
		W16-9P		AHEAD	24 x 12		
	H	SPECIAL		SHORT MERGE AHEAD		N/A	
		W4-1(R†)		MERGE (RIGHT)			
	I		C30A(CA)	SHOULDER CLOSED	30 x 30	1 - 4" x 6"	1
	J	W21-5b(R†)		RIGHT SHOULDER CLOSED AHEAD	36 x 36	1 - 4" x 6"	1
	K		C31A(CA)	NO SHOULDER	36 x 36	1 - 6" x 6"	1
		W1-4(R†)		REVERSE CURVE (RIGHT)	36 x 36		
	L	W21-5b(R†)		RIGHT SHOULDER CLOSED AHEAD	36 x 36	1 - 4" x 6"	1
3	A	R1-2		YIELD	36 x 36	1 - 6" x 6"	2
		R1-5		YIELD HERE TO PEDESTRIANS	36 x 36		
	B	M4-9b(L†)		PEDESTRIAN DETOUR (LEFT)	24 x 18	N/A	1
	C	R9-11(L†)		SIDEWALK CLOSED AHEAD, CROSS HERE (LEFT)	24 x 18	N/A	2
	D	W3-2		YIELD AHEAD	30 x 30	1 - 4" x 4"	1
	F	R9-9		SIDEWALK CLOSED	24 x 12	N/A	3
4	A	W21-5		SHOULDER WORK	48 x 48	1 - 6" x 6"	1
	B		C24(CA)(Mod)	SHOULDER CLOSED AHEAD	48 x 48	1 - 6" x 6"	1
	C		C30A(CA)	SHOULDER CLOSED	48 x 48	1 - 6" x 6"	1

1

TEMPORARY ROADWAY QUANTITIES

STAGE No.	STATION LIMITS	Temp PAVEMENT (N) SQFT	HMA (TYPE A) * TON	TACK COAT * TON	ROADWAY EXCAVATION * CY	EMBANKMENT (N) CY	REMOVE HMA DIKE* LF	HMA DIKE (TYPE A)* LF	HMA DIKE (TYPE F)* LF	REMOVE CURB * LF	CURB (TYPE A1-6) * CY
1A	"CC-E" 1021+50.03 TO "CC-M" 1026+70.88	7655			265	265					
1	"WST" 1007+31.26 TO "CC-W" 1008+51.53	3525	305	0.33	105	60					
1	"MAIN02" 241+64.53 TO "MAIN02" 242+90.88	740	64	0.03	32						
1	"FRN" 239+62.00 TO "FRN" 240+95.69	920	35		18	2		125			
1	"D1" 1+00.00 TO "D1" 3+27.21	3575	310		105	60	210		148	62	1.5
2	"MAIN04" 2+26.55 TO "MAIN04" 3+51.96	755	19		10						
	TOTAL	17170	733	0.36	535	387	210	125	148	62	1.5

* SEE Q SHEETS FOR GRAND TOTAL
(N) = NOT A SEPARATE PAY ITEM, FOR INFORMATION ONLY

1 **REPLACED PER ADDENDUM No. 1 DATED SEPTEMBER 23, 2016**

TRAFFIC HANDLING QUANTITIES

SCQ-2

REVISED BY	DATE REVISED
JHC	9-23-16
JHC	7-27-16

JULIA H. CHUANG — QUYNH NGUYEN — CALCULATED-DESIGNED BY — CHECKED BY

CONSULTANT FUNCTIONAL SUPERVISOR: SASHA DANSKY

STATE OF CALIFORNIA - DEPARTMENT OF TRANSPORTATION — Caltrans

LAST REVISION XX-XX-XX — DATE PLOTTED => 23-SEP-2016 — TIME PLOTTED => 08:55

Dist	COUNTY	ROUTE	POST MILES TOTAL PROJECT	SHEET No.	TOTAL SHEETS
04	CC, Mrn	580	5.0/7.8, 0.0/3.3	182	579

REGISTERED CIVIL ENGINEER 7-27-16 DATE

7-29-16
PLANS APPROVAL DATE

REGISTERED PROFESSIONAL ENGINEER JULIA H. CHUANG No. 72139 Exp. 6-30-18 CIVIL STATE OF CALIFORNIA

THE STATE OF CALIFORNIA OR ITS OFFICERS OR AGENTS SHALL NOT BE RESPONSIBLE FOR THE ACCURACY OR COMPLETENESS OF SCANNED COPIES OF THIS PLAN SHEET.

MARK THOMAS & COMPANY, INC.
3000 OAK ROAD, SUITE 650
WALNUT CREEK, CA 94597

BAY AREA TOLL AUTHORITY
375 BEALE STREET, SUITE 800
SAN FRANCISCO, CA 94105

TEMPORARY CRASH CUSHION

SHEET No.	LOCATION	STATION	ARRAY TYPE	Temp CRASH CUSHION MODULE	ABSORB 350
				EA	EA
SC-1	EB ROUTE 580 - R†	"CC-E" 1020+62	ABSORB 350		1
SC-2	EB ROUTE 580 - L†	"CC-M" 1026+04	ABSORB 350		1
SC-3	WB ROUTE 580 - L†	"CC-M" 1039+08	ABSORB 350		1
SC-4	EB ROUTE 580 SIR FRANCIS DRAKE Blvd ON RAMP - L†	"SFD01" 200+24	ABSORB 350		1
SC-4	WB ROUTE 580 SIR FRANCIS DRAKE Blvd OFF RAMP - L†	"SFD01" 204+90	TU14	14	
SC-4	EB ROUTE 580 SIR FRANCIS DRAKE Blvd ON RAMP - L†	"SFD01" 200+48	ABSORB 350		1
SC-6	EB ROUTE 580 GORE AREA	"MRN" 232+42	TU21	21	
SC-6	EB ROUTE 580 - L†	"MRN" 237+03	ABSORB 350		1
SC-7	EB ROUTE 580 MAIN S† OFF RAMP - R†	"MAIN01" 240+65	ABSORB 350		1
SC-7	EB ROUTE 580 MAIN S† OFF RAMP - L†	"MAIN01" 240+65	ABSORB 350		1
SC-7	EB FRANCISCO Blvd EAST - R†	"MRN" 239+18	ABSORB 350		1
SC-7	NB MAIN S† - R†	"MAIN04" 3+41	ABSORB 350		1
SC-7	EB ROUTE 580 MAIN S† ON RAMP - R†	"MAIN02" 242+06	ABSORB 350		1
SC-7	WB ROUTE 580 - L†	"MRN" 249+26	ABSORB 350		1
SC-8	WB ROUTE 580 - R†	"CC-W" 1009+35	ABSORB 350		1
SC-8	STENMARK Dr	"WST03" 1006+26	TU11	11	
SC-8	WB ROUTE 580 STENMARK Dr ON RAMP - L†	"WST" 1007+35	ABSORB 350		1
SC-8	EB ROUTE 580 STENMARK Dr ON RAMP - R†	"WST" 1007+49	ABSORB 350		1
SC-9	EB ROUTE 580 - R†	"CC-E" 1020+63	ABSORB 350		1
SC-10	EB ROUTE 580 GORE AREA	"CC-M" 1035+03	TU21	21	
SC-11	WB ROUTE 580 - R†	"CC-M" 1035+74	ABSORB 350		1
SC-12	NB CASTRO S† - R†	"CSTR" 1062+15	ABSORB 350		1
SC-12	NB CASTRO S† - R†	"CSTR" 1063+15	ABSORB 350		1
SC-13	EB ROUTE 580 - R†	"MRN" 240+91	TU14	14	
SC-13	EB ROUTE 580 MAIN S† OFF RAMP	"MAIN01" 240+45	TU11	11	
SC-13	SB MAIN S† - R†	"MAIN04" 4+54	ABSORB 350		1
SC-13	SB MAIN S† - R†	"MAIN04" 5+94	ABSORB 350		1
SC-14	WB ROUTE 580 - R†	"CC-W" 1009+35	ABSORB 350		1
SC-15	EB ROUTE 580 P† RICHMOND ON RAMP - R†	"MRNE02" 1042+96	ABSORB 350		1
SC-15	EB E STANDARD Ave - L†	"ESTD" 1043+17	ABSORB 350		1
SC-16	WB E STANDARD Ave - R†	"ESTD" 10565+92	ABSORB 350		1
SC-16	NB CASTRO S† - L†	"CSTR" 1061+88	ABSORB 350		1
SC-16	SB CASTRO S† - L†	"CSTR" 1063+15	ABSORB 350		1
SC-17	NB MAIN S† - R†	"MAIN04" 3+23	ABSORB 350		1
SC-17	SB MAIN S† - R†	"MAIN04" 3+24	ABSORB 350		1
SC-18	EB E STANDARD Ave - L†	"ESTD01" 1041+71	ABSORB 350		1
SC-20	EB ROUTE 580 - R†	"CC-E" 1020+62	ABSORB 350		1
			TOTAL	106	~~29~~ 30

1

1

REMOVE PAVEMENT STRIPES AND MARKINGS

STAGE No.	REMOVE THERMOPLASTIC TRAFFIC STRIPE *	REMOVE PAVEMENT MARKER *	REMOVE PAVEMENT MARKINGS *
	LF	EA	SF
1A	9,096	738	0
1	15,585	688	260
2	3,351	117	124
3	889	117	164
TOTAL	28,894	1,659	548

* NOTE: SEE PDQ SHEETS FOR GRAND TOTAL

TEMPORARY CURB RAMP

STAGE No.	SHEET No.	TEMPORARY CURB RAMP
		EA
1	SC-7	1
	TOTAL	1

1 REPLACED PER ADDENDUM No. 1 DATED SEPTEMBER 23, 2016

TRAFFIC HANDLING QUANTITIES

SCQ-5

REVISED BY	DATE REVISED
JHC	9-23-16
JHC	7-27-16

CALCULATED-DESIGNED BY: JULIA H. CHUANG
CHECKED BY: QUYNH NGUYEN
CONSULTANT FUNCTIONAL SUPERVISOR: SASHA DANSKY

STATE OF CALIFORNIA - DEPARTMENT OF TRANSPORTATION
Caltrans

LAST REVISION XX-XX-XX
DATE PLOTTED => 23-SEP-2016
TIME PLOTTED => 08:56

Dist	COUNTY	ROUTE	POST MILES TOTAL PROJECT	SHEET No.	TOTAL SHEETS
04	CC, Mrn	580	5.0/7.8, 0.0/3.3	183	579

REGISTERED CIVIL ENGINEER 7-27-16 DATE

7-29-16
PLANS APPROVAL DATE

REGISTERED PROFESSIONAL ENGINEER JULIA H. CHUANG No. 72139 Exp. 6-30-18 CIVIL STATE OF CALIFORNIA

THE STATE OF CALIFORNIA OR ITS OFFICERS OR AGENTS SHALL NOT BE RESPONSIBLE FOR THE ACCURACY OR COMPLETENESS OF SCANNED COPIES OF THIS PLAN SHEET.

MARK THOMAS & COMPANY, INC.
3000 OAK ROAD, SUITE 650
WALNUT CREEK, CA 94597

BAY AREA TOLL AUTHORITY
375 BEALE STREET, SUITE 800
SAN FRANCISCO, CA 94105

TEMPORARY RAILING (TYPE K)

STAGE No.	SHEET No.	LOCATION	STATION	Temp RAILING (TYPE K) (NO DOWELS)	Temp RAILING (TYPE K) (DOWELS)
				LF	LF
1A	SC-1 TO SC-2	EB ROUTE 580 - R†	"CC-E" 1020+62 TO "CC-M" 1029+33	840	
	SC-2 TO SC-3	EB ROUTE 580 - L†	"CC-M" 1026+04 TO "CC-M" 1038+28	1,220	
	SC-2 TO SC-3	WB ROUTE 580 - L†	"CC-M" 1026+54 TO "CC-M" 1038+88	1,240	
1	SC-4	EB ROUTE 580 SIR FRANCIS DRAKE Blvd ON RAMP - L†	"SFD01" 200+26 TO "SFD01" 210+15	600	380
	SC-4	WB ROUTE 580 SIR FRANCIS DRAKE Blvd OFF RAMP - L†	"SFD01" 200+48 TO "SFD01" 204+90	200	280
	SC-5 TO SC-6	EB ROUTE 580 - R†	"MRN" 219+86 TO "MRN" 226+77	560	140
	SC-6 TO SC-7	EB ROUTE 580 - R†	"MRN" 232+42 TO "MRN" 241+57	900	
	SC-6	EB ROUTE 580 MAIN S† OFF RAMP - L†	"MAIN01" 232+36 TO "MAIN01" 234+76	60	180
	SC-6 TO SC-7	EB ROUTE 580 - L†	"MRN" 237+03 TO "MRN" 249+61	1,260	
	SC-6 TO SC-7	WB ROUTE 580 - L†	"MRN" 237+00 TO "MRN" 249+26	1,200	
	SC-7	EB FRANCISCO Blvd EAST - R† TO SB MAIN S† - R†	"FRN" 239+47 TO "MAIN01" 240+65	80	320
	SC-7	NB MAIN S† - R†	"MAIN04" 3+41 TO "MAIN04" 3+93	60	
	SC-7	EB ROUTE 580 MAIN S† ON RAMP - R†	"MAIN02" 242+06 TO "MAIN02" 243+04	100	
	SC-7	EB ROUTE 580 MAIN S† ON RAMP - R†	"MAIN04" 3+72 TO "MAIN02" 242+95	140	
	SC-7	EB ROUTE 580 MAIN S† OFF RAMP - R†	"MAIN01" 238+26 TO "MAIN01" 240+43	220	
	SC-8	WB ROUTE 580 - L†	"CC-W" 1007+58 TO "CC-W" 1009+35		180
	SC-8	WB ROUTE 580 STENMARK Dr ON RAMP - L†	"WST" 1007+35 TO "WST" 1007+71		60
	SC-8	EB ROUTE 580 STENMARK Dr ON RAMP - R†	"WST" 1007+49 TO "WST" 1008+10	60	
	SC-8 TO SC-9	WB ROUTE 580 STENMARK Dr OFF RAMP - R†	"WST03" 1006+26 TO "CC-W" 1014+97	1,060	
	SC-9 TO SC-11	WB ROUTE 580 - R†	"CC-W" 1014+97 TO "CC-M" 1035+74	260	1,840
	SC-9 TO SC-10	EB ROUTE 580 - R†	"CC-E" 1020+63 TO "CC-M" 1033+82	1,280	
	SC-10 TO SC-11	EB ROUTE 580 - R†	"CC-M" 1035+03 TO "CC-M" 1043+63	380	480
	SC-10 TO SC-11	EB ROUTE 580 P† RICHMOND OFF RAMP - L†	"MRNE01" 1035+02 TO "MRNE01" 1041+89	40	640
	SC-11 TO SC-12	WB E STANDARD Ave - R† TO EB ROUTE 580 P† RICHMOND ON RAMP - R†	"MRNE02" 1046+66 TO "ESTD" 1053+68	1,320	
	SC-12	NB CASTRO S† - R†	"CSTR" 1062+15 TO "CSTR" 1063+15	100	
2	SC-13	EB ROUTE 580 - R†	"MRN" 240+91 TO "MRN" 245+82	500	
	SC-13	EB ROUTE 580 MAIN S† OFF RAMP	"MAIN01" 240+45 TO "MAIN01" 240+82	40	
	SC-13	EB ROUTE 580 MAIN S† OFF RAMP	"MAIN01" 240+46 TO "MAIN01" 240+86	40	
	SC-13	EB ROUTE 580 MAIN S† ON RAMP - L†	"MAIN04" 4+54 TO "MRN" 245+84	520	
	SC-14	WB ROUTE 580 - R†	"CC-W" 1007+58 TO "CC-W" 1009+35		180
	SC-15	EB ROUTE 580 P† RICHMOND ON RAMP - R†	"MRNE02" 1042+96 TO "MRNE02" 1043+66	80	
	SC-15 TO SC-16	EB E STANDARD Ave - L†	"ESTD" 1043+17 TO "ESTD" 1056+14	500	800
	SC-15 TO SC-16	WB E STANDARD Ave - L† TO EB ROUTE 580 P† RICHMOND ON RAMP - L†	"MRNE02" 1043+77 TO "ESTD" 1055+92	1,280	
	SC-16	NB CASTRO S† - L†	"CSTR" 1061+88 TO "CSTR" 1063+40	140	
	SC-16	SB CASTRO S† - L†	"CSTR" 1062+75 TO "CSTR" 1063+15	40	
3	SC-17	NB MAIN S† - R† TO EB ROUTE 580 MAIN S† ON RAMP - R†	"MAIN04" 3+23 TO "MAIN02" 243+50	260	
	SC-17	SB MAIN S† - R†	"MAIN04" 2+45 TO "MAIN04" 3+24	80	
	SC-18 TO SC-19	EB E STANDARD Ave - R†	"ESTD01" 1041+71 TO "ESTD01" 1056+05	900	540
4	SC-20 TO SC-21	EB ROUTE 580 - R†	"CC-E" 1020+62 TO "CC-M" 1038+72	840	
			SUBTOTAL	~~17,560~~	6,020
			TOTAL	18,400 ~~23,580~~	24,420

1

TEMPORARY FLASHING BEACON

STAGE No.	SHEET No.	TEMPORARY FLASHING BEACON
		EA
2	SC-13	2
	TOTAL	2

1

TEMPORARY TRAFFIC CONTROL DEVICES

STAGE No.	SHEET No.	CHANNELIZER (SURFACE MOUNTED)	TYPE III BARRICADE	TYPE P MARKER (N)	TYPE R MARKER (N)
		EA	EA	EA	EA
1A	SC-1	11		1	
	SC-2	6		1	
	SC-3	13		1	
1	SC-4	10	1	5	
	SC-5	5		1	
	SC-6	17		3	1
	SC-7	15	2	6	
	SC-8	6		5	
	SC-9	12		2	
	SC-10	16		2	1
	SC-11	15	3	4	
	SC-12	17	3	3	
	SCD-2		2		
	SCD-4		1		
2	SC-13	71	3	4	1
	SC-14	13		2	
	SC-15			2	
	SC-16	9		3	
3	SC-17	27	2	2	
	SC-18		3	1	
	SC-19	17	1		
	TOTAL	280	21	48	3

1 **REPLACED PER ADDENDUM No. 1 DATED SEPTERMBER 23, 2016**

TRAFFIC HANDLING QUANTITIES

SCQ-6

JHC	9-23-16	JULIA H. CHUANG	QUYNH NGUYEN
JHC	7-27-16	REVISED BY	DATE REVISED

CALCULATED-DESIGNED BY / CHECKED BY

CONSULTANT FUNCTIONAL SUPERVISOR: SASHA DANSKY

STATE OF CALIFORNIA - DEPARTMENT OF TRANSPORTATION

Caltrans

LAST REVISION XX-XX-XX | DATE PLOTTED => 23-SEP-2016 | TIME PLOTTED => 08:56

Dist	COUNTY	ROUTE	POST MILES TOTAL PROJECT	SHEET No.	TOTAL SHEETS
04	CC, Mrn	580	5.0/7.8, 0.0/3.3	257	579

REGISTERED CIVIL ENGINEER 7-13-16 DATE

7-29-16
PLANS APPROVAL DATE

REGISTERED PROFESSIONAL ENGINEER ANTHONY E. SILVA No. C75053 Exp. 12-31-17 CIVIL STATE OF CALIFORNIA

THE STATE OF CALIFORNIA OR ITS OFFICERS OR AGENTS SHALL NOT BE RESPONSIBLE FOR THE ACCURACY OR COMPLETENESS OF SCANNED COPIES OF THIS PLAN SHEET.

HNTB CORPORATION
1111 BROADWAY
9TH FLOOR
OAKLAND, CA 94607

BAY AREA TOLL AUTHORITY
375 BEALE STREET
SUITE 800
SAN FRANCISCO, CA 94105

1

ROADWAY QUANTITIES

STATION LIMITS	SIDE	CLASS 2 AGGREGATE BASE	CLASS 2 AGGREGATE SUBBASE	ATPB	HMA (TYPE A)	RHMA-G	LEAN CONCRETE BASE
		CY	CY	CY	TON	TON	CY
"SFD" 200+30.25 TO "SFD" 208+16.71	Lt/Rt	206	260		167	84	
"SFD" 208+16.71 TO "SFD" 208+68.74	Lt				14	3	
"MRN" 238+52.10 TO "MRN" 240+80.88	Lt/Rt				126	18	
"MRN" 248+41.11 TO "MRN" 248+50.76	Lt/Rt				3	1	
"MAIN04" 4+34.34 TO "MAIN04" 6+16.14	Lt	37	49		35	15	
"MAIN04" 4+25.23 TO "MAIN04" 4+66.82	Rt				7	2	
"MAIN02" 241+70.00 TO "MAIN02" 245+62.04	Lt/Rt	278	407		300	113	
"MAIN02" 243+44.44 TO "MAIN02" 245+61.58	Rt	61	90		66	25	
"MRN" 241+66.25 TO "MRN" 248+28.54	Lt	89			713	77	
"BP1" 1005+28.14 TO "CC-W" 1015+82.75	Lt	147	189		212		
"CC-E" 1021+22.90 TO "CC-M" 1033+82.33	Rt		828		838	194	223
"MRNE01" 1035+41.50 TO "CC-M" 1040+24.70	Lt/Rt		532		538	125	144
"MRNE01" 1038+01.71 TO "MRNE01" 1041+61.12	Lt/Rt	124	168		118	45	
"MRNE01" 1040+25.99 TO "MRNE01" 1041+10.99	Lt	15			12	9	
"BP1" 1045+20.85 TO "BP1" 1045+80.70	Rt	8	10		11		
"ESTD" 1043+01.25 TO "ESTD" 1044+18.17	Lt/Rt		40	16	37	19	22
"MRNE02" 1045+91.59 TO "ESTD" 1052+51.70	Lt/Rt		340	131	424	159	184
"ESTD01" 1045+29.49 TO "ESTD01" 1046+86.89	Rt	7	9		10		
"ESTD" 1052+11.85 TO "ESTD" 1056+03.53	Lt/Rt		73	28	68	34	39
"ESTD01" 1055+18.64 TO "ESTD01" 1056+50.24	Rt	13	17		19		
"ESTD" 1056+68.21 TO "ESTD" 1057+39.05	Rt		14	6	13	7	8
"CSTR" 1061+48.10 TO "CSTR" 1063+31.71	Rt	3					
"CSTR" 1062+69.42 TO "CSTR" 1063+38.84	Rt				10	2	
"ESTD01" 1042+01.84 TO "ESTD01" 1044+44.30	Lt		23	9	21	11	12
"ESTD01" 1042+01.84 TO "ESTD01" 1045+34.39	Rt	10	12		14		
"CSTR" 1063+15.85 TO "CSTR" 1063+33.76	Lt/Rt				5	2	
	SUBTOTAL	998	3061	190	3781	945	632
~~FROM OVERSIDE DRAIN TABLE~~					~~X~~		
FROM MINOR CONCRETE TABLE		193					
FROM COLD PLANE AND OVERLAY TABLE						6294	
FROM PLACE HMA DIKE TABLE					~~6~~ 4		
FROM TEMPORARY ROADWAY QUANTITIES TABLE (SEE SCQ-2)					733		
FROM DRAINAGE QUANTITIES TABLE (SEE DQ-1)					84		
FROM UTILITY WORK TABLE		42			25		
	TOTAL	~~1191~~ 1233	3061	190	~~4605~~ 4627	7294	632

PLACE HOT MIX ASPHALT (MISCELLANEOUS AREA)

STATION LIMITS	SIDE	CROSS SLOPE CORRECTION	ADA COMPLIANCE	~~HMA OVERSIDE DRAIN~~	4" HMA (MMWD)
		SQYD	SQYD	~~SQYD~~	SQYD
"BP1" 1023+83.54 TO "BP1" 1036+90.60	Lt	1695			
"BP1" 1036+90.60 TO "BP1" 1041+84.68	Lt		793		
"BP1" 1041+84.68 TO "BP1" 1043+60.45	Lt	200			
"BP1" 1043+60.45 TO "BP1" 1045+72.03	Lt		209		
~~"CC-M" 1040+10~~	~~Rt~~			~~4~~	
"ESTD01" 1042+01.84 TO "ESTD01" 1045+31.88	Rt	324			
"ESTD01" 1045+86.89 TO "ESTD01" 1051+54.79	Rt	630			
"ESTD01" 1055+07.83 TO "ESTD01" 1055+74.72	Rt	44			
"MAIN04" 3+30.00 TO "MAIN04" 6+50.00	Rt/Lt				75
	SUBTOTAL	2893	1002	~~4~~	75
	TOTAL		~~3948~~ 3970		

EARTHWORK SUMMARY

STATION LIMITS	ROADWAY EXCAVATION	ROADWAY EXCAVATION (TYPE Z-2 ADL)	EMBANKMENT [N]
	CY	CY	CY
"MAIN04" 4+00 TO 6+50		295	33
"MAIN02" 241+96.21 TO 245+82.25	~~723~~ 760		~~805~~ 902
"BP1" 1005+00 TO 1016+50	1219		660
"CC-E" 1021+65 TO "CC-M" 1033+00	7,700	~~1560~~ 1,022	119
"MRNE01" 1034+19.04 TO 1042+52.25	459		55
"ESTD" 1041+70 TO 1056+00	515		200
"CC-M" 1035+50 TO 1040+50	595		105
"SFD01" 200+00 TO 212+18	408		40
SUBTOTAL	~~3919~~ 1,656	~~1855~~ 1,317	~~2017~~ 2,114
FROM TEMPORARY ROADWAY QUANTITIES	535		387
TOTAL	~~4454~~ 2,191	~~1855~~ 1,317	~~2404~~ 2,501

[N] - NOT A SEPARATE PAY ITEM, FOR INFORMATION ONLY

COLD PLANE AND OVERLAY QUANTITIES

STATION LIMITS	SIDE	DEPTH	COLD PLANE AC PAVEMENT	RHMA-G [N]	HMA (TYPE A) (CROSS SLOPE CORRECTION)	HMA (TYPE A) (ADA COMPLIANCE)	TACK COAT
		ft	SQYD	TON	TON	TON	TON
"MRN" 223+23.28 TO "MRN" 240+81.10	Rt	0.10	12459	841			5.7
"MRN" 228+52.67 TO "MRN" 240+79.88	Lt	0.10	6693	452			3.1
"MRN" 241+66.25 TO "MRN" 248+52.70	Lt	0.10	2780	188			1.3
"MRN" 241+66.25 TO "MRN" 249+60.55	Rt	0.10	4688	317			2.2
"MAIN04" 3+25.74 TO "MAIN04" 4+42.10	Lt/Rt	0.10	820	56			0.4
"MAIN04" 6+16.14 TO "MAIN04" 6+45.28	Lt/Rt	0.10	203	14			0.1
"CC-E" 999+64.65 TO "CC-E" 1014+47.01	Lt/Rt	0.15	7853	796			3.6
"CC-W" 1012+05.14 TO "CC-E" 1015+82.75	Lt/Rt	0.15	2159	219			1.0
"CC-E" 1021+50.29 TO "CC-M" 1040+24.70	Rt	0.15	9872	1000			4.5
"CC-M" 1022+90 TO "CC-M" 1040+03.06	Lt	0.15	8386	850			3.8
"MRNE01" 1034+19.04 TO "ESTD" 1056+03.43	Lt/Rt	0.15	12902	1307			5.9
"CSTR" 1061+72.83 TO "CSTR" 1063+34.04	Rt	0.15	699	71			0.3
"BP1" 1023+83.54 TO "BP1" 1036+90.60	Lt	0.10	1695		286		0.8
"BP1" 1036+90.60 TO "BP1" 1041+84.68	Lt	0.10	793			134	0.4
"BP1" 1041+84.68 TO "BP1" 1043+60.45	Lt	0.10	200		34		0.1
"BP1" 1043+60.45 TO "BP1" 1045+72.03	Lt	0.10	209			95	0.1
"ESTD01" 1042+01.84 TO "ESTD01" 1045+31.88	Rt	0.10	324		55		0.2
"ESTD01" 1045+86.89 TO "ESTD01" 1051+54.79	Rt	0.10	630		107		0.3
"MAIN04" 3+25.75 TO "MAIN04" 4+66.82	Lt/Rt	Var	859	145			0.4
"MAIN04" 4+66.82 TO "MAIN04" 6+05.22	Lt/Rt	0.10	370	38			0.2
"ESTD01" 1055+07.83 TO "ESTD01" 1055+74.72	Rt	0.10	44		8		0.1
SUBTOTAL (TO ROADWAY QUANTITIES)				6294			
FROM TEMPORARY ROADWAY QUANTITIES TABLE							0.4
TOTAL			74638		490	229	34.9

~~HMA OVERSIDE DRAIN~~

~~STATION LIMITS~~	~~HMA (TYPE A) [N]~~	~~SQYD [N]~~
	~~TON~~	
~~"CC-M" 1040+10~~	~~1~~	~~4~~
~~SUBTOTAL (TO ROADWAY QUANTITIES)~~	~~1~~	~~4~~

~~[N] - NOT A SEPARATE PAY ITEM, FOR INFORMATION ONLY~~

1 **REPLACED PER ADDENDUM No. 1 DATED SEPTEMBER 23, 2016**

SUMMARY OF QUANTITIES

Q-1

REVISED BY	RdL	DATE REVISED	7-13-16
CALCULATED-DESIGNED BY	RYAN LITTELL	CHECKED BY	ANTHONY SILVA
CONSULTANT FUNCTIONAL SUPERVISOR	JAMES PUN		

STATE OF CALIFORNIA - DEPARTMENT OF TRANSPORTATION Caltrans

LAST REVISION 00-00-00 | DATE PLOTTED => 9/23/2016 | TIME PLOTTED => 10:20:04 AM

Dist	COUNTY	ROUTE	POST MILES TOTAL PROJECT	SHEET No.	TOTAL SHEETS
04	CC, Mrn	580	5.0/7.8, 0.0/3.3	258	579

REGISTERED CIVIL ENGINEER 7-13-16 DATE

7-29-16
PLANS APPROVAL DATE

REGISTERED PROFESSIONAL ENGINEER ANTHONY E. SILVA No. C75053 Exp. 12-31-17 CIVIL STATE OF CALIFORNIA

THE STATE OF CALIFORNIA OR ITS OFFICERS OR AGENTS SHALL NOT BE RESPONSIBLE FOR THE ACCURACY OR COMPLETENESS OF SCANNED COPIES OF THIS PLAN SHEET.

HNTB CORPORATION
1111 BROADWAY
9TH FLOOR
OAKLAND, CA 94607

BAY AREA TOLL AUTHORITY
375 BEALE STREET
SUITE 800
SAN FRANCISCO, CA 94105

REMOVE CONCRETE

STATION LIMITS	SIDE	CB (TYPE 50SC)	CB (TYPE 60C)	Conc SIDEWALK	Conc ISLAND	CURB AND GUTTER	CURB	Conc DITCH
		LF	LF	SQYD	SQYD	LF	LF	LF
"SFD01" 200+29 TO "SFD01" 202+94	Med				272			
"MRN" 237+46.79 TO "MRN" 240+80.02	Med	351						
"MRN" 241+65.22 TO "MRN" 248+98.00	Med	743						
"MAIN02" 242+02 TO "MAIN04" 4+67	Lt/Rt			35		63		
"MAIN04" 4+27 TO "MAIN04" 6+28	Lt					222		
"MAIN04" 5+78 TO "MAIN03" 241+64	Rt			15		69		
"CC-M" 1029+69 TO "CC-M" 1033+90	Rt							397
"MRNE01"1038+37 TO "MRNE01"1039+18	Lt							90
"ESTD" 1043+02 TO "ESTD" 1044+20	Lt/Rt				182			
"ESTD" 1044+54 TO "ESTD" 1051+76	Rt	726						
"ESTD" 1052+13 TO "ESTD" 1056+03	Lt/Rt				333			
"ESTD" 1056+68 TO "ESTD" 1057+39	Rt				63			
"CSTR" 1061+84 TO "CSTR" 1063+34	Rt					150		
"CSTR" 1062+33 TO "CSTR" 1063+39	Rt				42			
"CSTR" 1062+45 TO "CSTR" 1063+38	Rt						120	
"CSTR" 1061+84 TO "CSTR" 1063+28	Lt/Rt						170	
"CC-M" 1026+63.93 TO "CC-M" 1023+75.93	Rt		12					
"CC-M" 1028+63.86 TO "CC-M" 1028+76.00	Rt/Lt		12					
"CC-M" 1031+83.94 TO "CC-M" 1031+95.95	Rt		12					
"CC-M" 1034+24.92 TO "CC-M" 1034+36.92	Rt		12					
"CC-M" 1038+07.04 TO "CC-M" 1038+19.04	Rt		12					
FROM TEMPORARY ROADWAY QUANTITIES							62	
TOTAL		1820	60	50	892	504	352	487

REMOVE CRASH CUSHION

LOCATION	SIDE	EA
"ESTD" 1044+54	Rt	1
"ESTD" 1051+76	Rt	1
TOTAL		2

REMOVE BOLLARD

LOCATION	SIDE	EA
"MAIN02" 242+17	Rt	2
TOTAL		2

REMOVE GUARDRAIL

STATION LIMITS	SIDE	MBGR	TREATED WOOD WASTE [N]
		LF	lb
"SFD01" 202+48 TO 210+24	Lt	776	11100
"MRN" 238+00 TO 240+92	Rt	292	4240
"MRN" 241+87 TO 243+67	Rt	202	2960
"CC-W" 1008+22 TO 1009+06	Lt	86	1310
"WST" 1013+98 TO "BP1" 1016+52	Lt	209	3060
"CC-M" 1039+92 TO 1040+55	Rt	65	1020
"CC-M" 1031+03 TO 1032+74	Rt	164	2415
"CC-E" 999+65 TO 1000+16	Lt	52	826
SUBTOTAL (TO TREATED WOOD WASTE)			~~26070~~ 26896
TOTAL		~~1794~~ 1846	

1

[N] NOT A SEPARATE PAY ITEM, FOR INFORMATION ONLY.

REMOVE ASPHALT CONCRETE DIKE

STATION LIMITS	SIDE	LF
"CC-W" 1007+78 TO "CC-W" 1009+06	Lt	133
"BP1" 1011+52 TO "BP1" 1013+70	Rt	218
"BP1" 1040+61 TO "BP1" 1042+05	Rt	144
"ESTD01" 1041+49 TO "ESTD01" 1042+02	Rt	53
FROM TEMPORARY ROADWAY QUANTITIES		210
TOTAL		758

REMOVE FENCE

STATION LIMITS	SIDE	CHAIN LINK FENCE
		LF
"ESTD01" 1041+50 TO "ESTD01" 1045+32	Rt	403
"BP1" 1012+00 TO 1016+96	Lt	492
"MAIN04" 3+26 TO "MAIN02" 1041+27	Rt	80
TOTAL		975

REMOVE BASE AND SURFACING

STATION LIMITS	SIDE	AREA [N]	DEPTH [N]	VOLUME
		SQFT	Ft	CY
"MAIN02" 241+70 TO "MAIN02" 243+41	Rt/Lt	3275	0.92	112
"MAIN04" 5+99 TO "MAIN03" 241+63	Rt/Lt	218	0.92	8
			TOTAL	120

[N] NOT A SEPARATE PAY ITEM, FOR INFORMATION ONLY.

MINOR CONCRETE

STATION LIMITS	SIDE	TEXTURED PAVING	ISLAND PAVING	SIDEWALK	CURB (TYPE A2-6)	CURB (TYPE A1-6)	CURB (TYPE A3-6)	CURB (TYPE B1-6)	CURB (TYPE B4)	CURB RAMP (CASE A)	CURB RAMP* (CASE C Mod)	CURB RAMP* (CASE F Mod)	CI 2 AB [N]
		CY	CY	CY	CY	CY	CY	CY	CY	CY	CY	CY	CY
"MAIN01" 233+15.70 TO "MAIN01" 234+51.62	Lt	24.4											37.1
"MAIN02" 241+74	Rt										0.8		1.2
"MAIN02" 241+77	Lt										1.2		1.8
"MAIN03" 241+35	Rt										0.7		1.1
"MAIN04" 3+25.74 TO "MAIN02" 241+84.83	Rt			20.8	4.7								35.3
"MAIN02" 241+84.83 TO "MAIN02" 243+41	Rt					4.4							2.0
"MAIN02" 242+02.11 TO "MAIN04" 4+66.84	Lt/Rt			5.4	4.5								11.9
"MAIN02" 244+22.00 TO "MAIN02" 244+39.00	Lt								2.1				
"MAIN04" 4+26.43 TO "MAIN04" 6+27.67	Lt				13.4								11.0
"MAIN04" 5+77.98 TO "MAIN03" 241+63.67	Rt			5.3	5.1								12.1
"MRNE01" 1042+27	Lt									0.6			0.8
"MRNE01" 1037+01.48 TO "MRNE01" 1038+01.96	Lt	20.9											31.7
"ESTD" 1043+16.20 TO "ESTD" 1044+13.90	Lt		24.8				2.9						13.6
"ESTD" 1054+95.56 TO "ESTD" 1056+03.53	Lt		4.2				1.2						5.5
"ESTD" 1056+65.17 TO "ESTD" 1056+80.56	Rt		3.7				0.6						4.0
"CSTR" 1062+45.05 TO "CSTR" 1063+37.98	Rt		3.3					3.6					5.0
"CSTR" 1061+84.13 TO "CSTR" 1063+32	Rt		7.7		9.0	0.6							15.2
"CSTR" 1063+10	Lt/Rt									0.5		1.4	2.8
"BP1" 1040+61 TO "BP1" 1042+05	Rt							4.2					
FROM TEMPORARY ROADWAY QUANTITIES						1.5							
SUBTOTAL		45.3	44	31.5	36.7	6.5	4.7	7.8	2.1	1.1	2.7	1.4	193
MINOR CONCRETE (CURB, SIDEWALK, AND CURB RAMP)						187							
TOTAL TO ROADWAY QUANTITIES													193

[N] NOT A SEPARATE PAY ITEM, FOR INFORMATION ONLY.
* CURB RAMP REQUIRES PRE AND POST CONSTRUCTION SURVEY.

1 **REPLACED PER ADDENDUM No. 1 DATED SEPTEMBER 23, 2016**

SUMMARY OF QUANTITIES
Q-2

STATE OF CALIFORNIA - DEPARTMENT OF TRANSPORTATION
Caltrans®
CONSULTANT FUNCTIONAL SUPERVISOR: JAMES PUN
CALCULATED-DESIGNED BY: QIANWEN DENG
CHECKED BY: JAMES PUN
REVISED BY: RdL
DATE REVISED: 7-13-16

LAST REVISION 00-00-00
DATE PLOTTED => 9/23/2016
TIME PLOTTED => 10:20:04 AM

Dist	COUNTY	ROUTE	POST MILES TOTAL PROJECT	SHEET No.	TOTAL SHEETS
04	CC, Mrn	580	5.0/7.8, 0.0/3.3	259	579

REGISTERED CIVIL ENGINEER 7-13-16 DATE

7-29-16
PLANS APPROVAL DATE

REGISTERED PROFESSIONAL ENGINEER ANTHONY E. SILVA No. C75053 Exp. 12-31-17 CIVIL STATE OF CALIFORNIA

THE STATE OF CALIFORNIA OR ITS OFFICERS OR AGENTS SHALL NOT BE RESPONSIBLE FOR THE ACCURACY OR COMPLETENESS OF SCANNED COPIES OF THIS PLAN SHEET.

HNTB CORPORATION
1111 BROADWAY
9TH FLOOR
OAKLAND, CA 94607

BAY AREA TOLL AUTHORITY
375 BEALE STREET
SUITE 800
SAN FRANCISCO, CA 94105

1

CONCRETE BARRIER

STATION LIMITS	SIDE	TYPE 60SC Mod	TYPE 60SC Mod2	TYPE 60SC	TYPE 60S	TYPE 60P Mod	TYPE 60PR	TYPE 60C	~~TYPE 60D~~
		LF	LF	LF	LF	LF	LF	LF	~~LF~~
"SFD01" 202+70.47 TO "SFD01" 208+16.50	L+							551	
"MRN" 237+46.79 TO "MRN" 237+58.79	R+			12					
"MRN" 237+58.79 TO "MRN1" 237+73.45	L+					15			
"MRN" 237+58.80 TO "MRN1" 240+54.81	L+			299					
"MRN1" 240+54.81 TO "MRN1" 240+69.47	Med					15			
"MRN1" 240+69.47 TO "MRN1" 240+80.02	Med			11					
"MRN1" 241+61.44 TO "MRN1" 248+67.30	Med			720					
"MRN1" 248+67.30 TO "MRN1" 248+81.96	Med					15			
"MRN1" 248+81.96 TO "MRN1" 248+93.96	Med			12					
"MAIN01" 239+63.50 TO "MAIN01" 240+18.36	R+		56						
"MAIN04" 6+09.63 TO "FRN" 240+91.53	L+/R+							28.5	
"MAIN02" 245+42.00 TO "MAIN02" 245+61.71	R+			20					
"MAIN02" 243+96.91 TO "MAIN02" 244+22.00	L+			26					
"BP1" 1005+75.55 TO "BP1" 1011+74.18	R+	602							
"BP1" 1011+74.18 TO "BP1" 1011+82.32	R+			8.5					
"BP1" 1011+82.32 TO "BP1" 1012+17.62	R+								
"BP1" 1012+17.67 TO "BP1" 1012+25.89	R+			8.5					
"BP1" 1012+25.89 TO "BP1" 1016+52.87	R+	428							
"CC-M" 1026+63.93 TO "CC-M" 1023+75.93	R+						12		
"CC-M" 1028+63.86 TO "CC-M" 1028+76.00	R+/L+						12		
"CC-M" 1031+83.94 TO "CC-M" 1031+95.95	R+						12		
"CC-M" 1034+24.92 TO "CC-M" 1034+36.92	R+						12		
"CC-M" 1038+07.04 TO "CC-M" 1038+19.04	R+						12		
"ESTD" 1043+99.87 TO "ESTD" 1054+96.63	Med				1153				
"ESTD01" 1041+84.91 TO "ESTD1" 1056+09	L+	1430							
"BP1" 1014+12.47 TO "BP1" 1014+55.12	L+		45						
"BP1" 1015+10.05 TO "BP1" 1016+00.00	L+		89						
~~"MAIN02" 242+64.00 TO "MAIN02" 243+96.91~~	~~L+~~								~~133~~
~~"CC-E" 1021+22.49 TO "CC-M" 1028+25.08~~	~~R+~~								~~681~~
TOTAL		2650		1117	1153	105		635.5	~~814~~

REMOVABLE STEEL BOLLARD

LOCATION	EA
"CC-E" 1002+65.55 (R+)	1
"BP1" 1045+67.46	1
TOTAL	2

PRECAST CONCRETE BENCH

LOCATION	SIDE	EA
"BP1" 1041+65.00	R+	1
"ESTD01" 1056+47.00	L+	1
TOTAL		2

REMOVE PEDESTRIAN BARRICADE

LOCATION	SIDE	EA
"MAIN03" 241+42.96	R+	1
TOTAL		1

CRASH CUSHION

LOCATION	SIDE	ALTERNATIVE CRASH CUSHION SYSTEM
		EA
"FRN" 240+91.53	R+	1
"SFD01" 202+70.47	L+	1
"BP1" 1005+75.55	L+	1
"ESTD" 1043+99.87	R+	1
"ESTD01" 1041+75.55	R+	1
TOTAL		5

MIDWEST GUARDRAIL SYSTEM

STATION LIMITS	SIDE	LAYOUT TYPE	MIDWEST GUARDRAIL SYSTEM (WOOD POST)	MIDWEST GUARDRAIL SYSTEM (7' WOOD POST)	ALTERNATIVE FLARED TERMINAL SYSTEM	ALTERNATIVE IN-LINE TERMINAL SYSTEM	END ANCHOR ASSEMBLY (TYPE SFT)	TRANSITION RAILING (TYPE WB-31)	END CAP	MINOR CONCRETE (ANCHOR BLOCK)
			LF	LF	EA	EA	EA	EA	EA	CY
"SFD01" 208+16.50 TO 210+24.32	L+	12AA	131.25			1		1	1	
"MRN" 221+24.07 TO 222+08.85	R+	16B	50.00		1		1			
"MRN" 225+85.05 TO 226+59.75	R+	16B	37.50		1		1			
"MRN" 237+97.68 TO 240+84.90	R+	12B	225.00		1			1	1	
"MRN" 241+70.96 TO 243+92.28	R+	12DD	225.00				1		1	
"MAIN01" 239+26.16 TO 239+38.66	R+	-	12.50		1			1	1	
"CC-W" 1008+20.88 TO 1009+05.76	L+	12AA Mod	56.25				1	1	1	
"CC-M" 1025+61.16 TO 1026+65.07	R+	12A	62.50		1					
"CC-M" 1027+01.23 TO 1027+27.29	R+	12DD	25.00							
"CC-M" 1031+42.46 TO 1032+33.83	R+	16E	87.50		1				1	
"CC-M" 1039+67.54 TO 1040+54.71	R+	12B	25.00		1			1	1	
"CC-M" 1042+34.47 TO 1043+46.97	R+	12DD	106.25		1			1	1	
"ESTD" 1049+86.26 TO 1052+41.71	L+	12DD		260.00			1		1	
"CC-E" 999+77.00 TO 1000+08.25	R+	12DD	31.25				1		1	2.1
"CC-E" 999+77.35 TO 1000+08.60	L+	12DD	31.25				1		1	2.1
TOTAL			~~1043.75~~ 1106.25	260	8	1	~~5~~ 7	6	~~9~~ 11	4.2

FENCE/RAILING

STATION LIMITS	SIDE	FENCE (TYPE CL-8 WITH BW)	FENCE (TYPE CL-6)	14' GATE (TYPE CL-6)	RAILING (TYPE CL-8 Mod 1)	BICYCLE RAILING
		LF	LF	EA	LF	LF
"MAIN04" 3+25.71 TO "MAIN02" 212+04.22	R+	80				
"MAIN02" 245+29.81	R+		10	1		
"BP1" 1012+00.09 TO "BP1" 1016+73.95	L+				461	
"BP1" 1005+75.55 TO "BP1" 1011+74.18	R+					602
"BP1" 1012+25.89 TO "BP1" 1016+52.87	R+					428
"BP1" 1023+83.48 TO "BP1" 1036+27.67	R+					1245
"ESTD01" 1041+84.91 TO "ESTD01" 1055+75	R+					1390
TOTAL		80	10	1	461	3665

TEMPORARY FENCE

STATION LIMITS	SIDE	TYPE ESA
		LF
"SFD01" 200+96 TO 202+82	L+	500
"SFD01" 204+44 TO 205+76	L+	296
"MRN" 216+15 TO 227+00	R+	1312
TOTAL		2108

1 **REPLACED PER ADDENDUM No. 1 DATED SEPTEMBER 23, 2016**

SUMMARY OF QUANTITIES
Q-3

REVISED BY: RdL — DATE REVISED: 7-13-16
CALCULATED-DESIGNED BY: EDWIN XIE — CHECKED BY: JAMES PUN
CONSULTANT FUNCTIONAL SUPERVISOR: JAMES PUN
STATE OF CALIFORNIA - DEPARTMENT OF TRANSPORTATION
Caltrans

LAST REVISION 00-00-00 | DATE PLOTTED => 9/23/2016 | TIME PLOTTED => 10:20:05 AM

Dist	COUNTY	ROUTE	POST MILES TOTAL PROJECT	SHEET No.	TOTAL SHEETS
04	CC, Mrn	580	5.0/7.8, 0.0/3.3	260	579

REGISTERED CIVIL ENGINEER 7-13-16 DATE

7-29-16
PLANS APPROVAL DATE

REGISTERED PROFESSIONAL ENGINEER ANTHONY E. SILVA No. C75053 Exp. 12-31-17 CIVIL STATE OF CALIFORNIA

THE STATE OF CALIFORNIA OR ITS OFFICERS OR AGENTS SHALL NOT BE RESPONSIBLE FOR THE ACCURACY OR COMPLETENESS OF SCANNED COPIES OF THIS PLAN SHEET.

HNTB CORPORATION
1111 BROADWAY
9TH FLOOR
OAKLAND, CA 94607

BAY AREA TOLL AUTHORITY
375 BEALE STREET
SUITE 800
SAN FRANCISCO, CA 94105

1

IRRIGATION CONDUITS

LOCATION		SIDE		CONDUIT TYPE (3)		(N) WATER LINE CROSSOVER	(N) SPRINKLER CONTROL CROSSOVER
				SIZE (INCH)			
LINE	STATION	L†	R†	8			
				LENGTH (LF)		SIZE (INCH)	SIZE (INCH)
"MRNE01"	1041+65	X	X	57		3	3
"BP01"	1045+45	X	X	96		3	3
"MRNE02"	1043+56	X	X	72		3	3
"ESTD"	1045+62	X	X	74		3	3
TOTAL				299			

(N) - NOT A SEPARATE PAY ITEM FOR INFORMATION ONLY
X - DENOTES REQUIREMENT

CONDUIT TYPE:

(APPLICABLE WHEN CIRCLED BELOW AND SHOWN UNDER THE 'CONDUIT TYPE' COLUMN HEADING)

1 BITUMINOUS COATED CORRUGATED STEEL PIPE (0.064 INCH THICK)
2 CORRUGATED STEEL PIPE (0.064 INCH THICK)
(3) CORRUGATED HIGH DENSITY POLYETHYLENE PIPE
4 ALTERNATIVE CONDUIT
5 WELDED STEEL PIPE

BARRICADE

LOCATION	SIDE	PEDESTRIAN BARRICADE (TYPE I)
		EA
"CSTR" 1058+92.19	L†	1
"MAIN03" 241+50.46	L†	1
"MAIN02" 241+85.00	L†	1
TOTAL		3

SUBSURFACE DRAINAGE

SHEET	STATION LIMITS	3" SPP (EDGE DRAIN)	3" PLASTIC PIPE (EDGE DRAIN OUTLET)	
			OUTLET	VENT
		LF	LF	LF
D-7	"ESTD" 1043+74 TO "ESTD" 1047+59	388	100	9
	SUBTOTAL	388	100	9
	TOTAL	388	109	

PLACE HOT MIX ASPHALT DIKE

STATION LIMITS	SIDE	TYPE C		TYPE D		TYPE E		TYPE A		TYPE F	
		LF	TON	LF	TON	LF	TON	LF	TON	LF	TON
"MAIN03" 241+63.67 TO "MAIN03" 241+85.58	R†			26	1.54						
~~"BP1" 1012+23.67 TO "BP1" 1012+52.67~~	~~L†~~	~~29~~	~~0.17~~								
~~"BP1" 1012+52.67 TO "BP1" 1013+59.80~~	~~L†~~	~~107~~	~~0.82~~								
"MRNE01" 1040+72.20 TO "MRNE01" 1041+59.20	L†					92	2.43				
SUBTOTAL		~~107~~	~~1.59~~	26	1.54	92	2.43				
FROM TEMPORARY ROADWAY QUANTITIES								125	0.12	148	0.07
TOTAL (TO ROADWAY QUANTITIES)		4.2 ~~5.8~~ TON HMA									

VEGETATION CONTROL (MINOR CONCRETE)

SHEET	VEGETATION CONTROL
	SQYD
L-2	81
L-2/L-3	80
L-3/L-4	138
L-4	78
L-20	~~42~~ 93
L-22	125
L-23	63
TOTAL	~~607~~ 658

CONCRETE BARRIER GATE (ARMORGUARD GATE SYSTEM)

STATION LIMITS	SIDE	EA
"BP1" 1011+82 TO 1012+34	R†	1
TOTAL		1

UTILITY WORK

SHEET	LOCATION	STATION LIMITS	SIDE	ADJUST MANHOLE FRAME AND COVER TO GRADE	ADJUST VALVE BOX TO GRADE	MMWD 6" WATER LINE RELOCATION	PG&E ELECTRICAL UNDER-GROUNDING
				EA	EA	LF	LF
U-4	NB MAIN St	"MAIN04" 3+30 TO "MAIN04" 3+33	L†	3	1		
U-21	BIKE PATH FROM MARINE St	"BP1" 1037+40 TO "BP1" 1039+30	L†	2			
U-25	STENMARK Dr OFF-RAMP	"BP1" 1011+50 TO "BP1" 1016+80	R†/L†				500
U-26	MAIN St	"MAIN04" 3+30 TO "MAIN04" 6+50	R†/L†			450	
			TOTAL	5	1	450	500

RUMBLE STRIP

STATION LIMITS	SIDE	6" SHOULDER RUMBLE STRIP (HMA, GROUND-IN INDENTATION)	SHOULDER RUMBLE STRIP (HMA, GROUND-IN INDENTATION)
		STA	STA
"SFD01" 200+10 TO "SFD01" 207+81	R†	7.7	
"SFD01" 207+81 TO "MAIN01" 238+53	R†		31
TOTAL		7.7	31

TREATED WOOD WASTE

	LB
FROM REMOVE GUARDRAIL	~~26070~~ 26896
FROM REMOVE ROADSIDE SIGN	5360
FROM TIMBER RETAINING WALL	1000
TOTAL	~~32430~~ 33256

PAINT QUANTITIES

STATION LIMITS	SIDE	PREPARE AND PAINT POSTMILE MARKINGS ON BRIDGE BARRIER
		SQFT
"LD" 250+00.00 TO 463+34.00	L†	64
	TOTAL	64

ROCK BLANKET

SHEET	SQFT
L-4	384
L-23	1,666
TOTAL	2,050

FG 300 TURNPIKE GRADE CURB SYSTEM

STATION LIMITS	SIDE	EA
"SFD01" 200+10 TO 207+81	R†	38
SUBTOTAL		38
TOTAL		40

1 **REPLACED PER ADDENDUM No. 1 DATED SEPTEMBER 23, 2016**

SUMMARY OF QUANTITIES

Q-4

REVISED BY	RdL	EDWIN XIE	JAMES PUN
DATE REVISED	7-13-16	JAMES PUN	

CALCULATED-DESIGNED BY
CHECKED BY
CONSULTANT FUNCTIONAL SUPERVISOR
STATE OF CALIFORNIA - DEPARTMENT OF TRANSPORTATION
Caltrans

LAST REVISION 00-00-00
DATE PLOTTED => 9/23/2016
TIME PLOTTED => 10:20:06 AM

Dist	COUNTY	ROUTE	POST MILES TOTAL PROJECT	SHEET No.	TOTAL SHEETS
04	CC, Mrn	580	5.0/7.8, 0.0/3.3	287	579

REGISTERED CIVIL ENGINEER — DATE 7-29-16

PLANS APPROVAL DATE 7-29-16

REGISTERED PROFESSIONAL ENGINEER — KIN Y. CHAN No. 55391 Exp. 12-31-16 CIVIL — STATE OF CALIFORNIA

THE STATE OF CALIFORNIA OR ITS OFFICERS OR AGENTS SHALL NOT BE RESPONSIBLE FOR THE ACCURACY OR COMPLETENESS OF SCANNED COPIES OF THIS PLAN SHEET.

Y&C TRANSPORTATION CONSULTANTS, INC.
3250 RAMOS CIRCLE
SACRAMENTO, CA 95827

BAY AREA TOLL AUTHORITY
375 BEALE STREET
SUITE 800
SAN FRANCISCO, CA 94105

ELECTRICAL INDEX:

E-1	ELECTRICAL INDEX, NOTES, ABBREVIATIONS AND SYMBOLS
E-2 TO E-3	LEGEND
E-4 TO E-49	MODIFY EXISTING ELECTRICAL SYSTEM
E-50 TO E-68	ELECTRICAL DETAILS
E-69 TO E-70	ELECTRICAL QUANTITIES
E-71	NOTES, SYMBOLS AND LEGEND (STAGE CONSTRUCTION)
E-72 TO E-75	LIGHTING (STAGE CONSTRUCTION)
E-76 TO E-77	TRAFFIC OPERATIONS SYSTEM (STAGE CONSTRUCTION)
E-78 TO E-91	SIGNAL AND LIGHTING (STAGE CONSTRUCTION)
SES-1 TO SES-9	TEMPORARY WOOD POLES

GENERAL NOTES:

1. NO ABOVE GROUND ELECTRICAL WORK SHALL BE PERFORMED ON ANY SYSTEM WITHIN THE PROJECT SITE UNTIL ALL CONTRACTOR-FURNISHED ELECTRICAL MATERIALS FOR THAT INDIVIDUAL SYSTEM HAVE BEEN TESTED AND DELIVERED TO CONTRACTOR.
2. THE NEUTRAL CONDUCTOR SHALL RUN FROM THE SERVICE EQUIPMENT ENCLOSURE TO THE CONTROLLER CABINET WITHOUT SPLICING TO ANY OTHER NEUTRAL CONDUCTOR.
3. THE CLEARANCE BETWEEN THE BOTTOM OF THE LOWEST CIRCUIT BREAKER AND THE BOTTOM OF THE SERVICE EQUIPMENT ENCLOSURE FOR A TYPE III-A SERIES SHALL BE 24 INCHES MINIMUM.
4. WHERE ONE OR MORE TRAFFIC SIGNAL DETECTOR(S) CONSIST OF A SEQUENCE OF 4 LOOPS IN A SINGLE LANE, THE FRONT LOOP CLOSEST TO THE LIMIT LINE OR CROSSWALK SHALL BE LOCATED 1 FOOT FROM THE LINE. THE SET OF 3 LOOPS OR 4 LOOPS ASSIGNED TO THE SAME LOOP DETECTOR LEAD-IN CABLE (DLC) SHALL BE CONNECTED IN SERIES FOR TRAFFIC SIGNAL SYSTEM ONLY AND NOT FOR RAMP METERING SYSTEM.
5. PULL BOXES FOR CIRCUITS LABELED "(CITY/COUNTY) CIRCUIT" ON THE PLANS SHALL NOT HAVE THE "CALTRANS" COVER MARKING. THE COVERS SHALL BE MARKED "LIGHTING" FOR CITY'S STREET LIGHTING.
6. POWER CONDUCTORS AND COMMUNICATION CABLES BETWEEN LUS AND CONTROLLER CABINET MUST BE FURNISHED BY THE SAME MANUFACTURER. SEE SHEET E-68 FOR DETAILS.
7. NETWORK EQUIPMENT SHALL INCLUDE NETWORK SWITCH, FIBER DISTRIBUTION UNIT, FIBER OPTIC PIGTAILS, CONNECTORS AND OTHER NECESSARY EQUIPENT TO COMPLETE NETWORK COMMUNICATION SYSTEM.
8. LOCATIONS OF CONTROLLERS, STANDARDS, CONDUITS AND PULL BOXES ARE APPROXIMATE AND MAY BE CHANGED TO SUIT FIELD CONDITIONS OR AS DIRECTED BY THE ENGINEER.
9. ALL NEW LUMINAIRES SHALL BE LED.

ABBREVIATIONS:

ADA	AMERICANS WITH DISABILITIES ACT
AT&T	AMERICAN TELEPHONE AND TELEGRAPH COMPANY
GPRS	GENERAL PACKET RADIO SYSTEM
HCC	HYBRID CAMERA CABLE
LLLD	LONG LEAD-IN-CABLE LOOP DETECTOR SENSOR UNIT
LUS	LANE USE SIGN
MCC	MOTOR CONTROL CENTER
PG&E	PACIFIC GAS AND ELECTRIC COMPANY
PTZ	PAN-TILT-ZOOM
RRFB	RECTANGULAR RAPID FLASHING BEACON
TC	TELEPHONE CABLE (6 PAIR #22)
TOU	"TIME OF USE" METER SOCKET
VCC	VMS CONTROL CABLE
VMS	VARIABLE MESSAGE SIGN

SYMBOLS:

TYPE 1-B POLE WITH RAMP METER SIGNALS. SEE DETAIL "SIG" ON SHEET E-56.

PGE — PG&E PULL BOX PER SERVICE UTILITY REQUIREMENT

LUS (SMALL): TELEGRA RED X/GREEN ARROW LED LANE USE SIGN (MODEL No. TG-NextGen 6206-22-30-30-RGB-S-24-Cu) OR APPROVED EQUAL

LUS (LARGE): TELEGRA YELLOW MERGE ARROW/GREEN ARROW LED LANE USE SIGN (MODEL No. TG-NextGen 6207-22-45-45-RGB-S-24-Cu) OR APPROVED EQUAL

SV — FIBER OPTIC SPLICE VAULT

B — BUCK BOOSTER TRANSFORMER

VMS: TELEGRA (MODEL No. TG-NextGen 6205-27-96-48-Y-S-24-Cu) OR APPROVED EQUAL MOUNTED ON WOOD POSTS. SEE DETAIL ON SHEET E-62.

1 REPLACED PER ADDENDUM No. 1 DATED SEPTEMBER 23, 2016

ELECTRICAL INDEX, NOTES, ABBREVIATIONS AND SYMBOLS

E-1

REVISED BY	DATE REVISED
MY	7-29-16

CALCULATED-DESIGNED BY: MENG YANG
CHECKED BY: DAN YAU
FUNCTIONAL SUPERVISOR: CHADI CHAZBEK

STATE OF CALIFORNIA - DEPARTMENT OF TRANSPORTATION — Caltrans

LAST REVISION 07-29-16 — DATE PLOTTED => 9/22/2016 TIME PLOTTED => 5:14:57 PM

Dist	COUNTY	ROUTE	POST MILES TOTAL PROJECT	SHEET No.	TOTAL SHEETS
04	CC, Mrn	580	5.0/7.8, 0.0/3.3	289	579

REGISTERED CIVIL ENGINEER 7-29-16 DATE

7-29-16
PLANS APPROVAL DATE

REGISTERED PROFESSIONAL ENGINEER KIN Y. CHAN No. 55391 Exp. 12-31-16 CIVIL STATE OF CALIFORNIA

THE STATE OF CALIFORNIA OR ITS OFFICERS OR AGENTS SHALL NOT BE RESPONSIBLE FOR THE ACCURACY OR COMPLETENESS OF SCANNED COPIES OF THIS PLAN SHEET.

Y&C TRANSPORTATION CONSULTANTS, INC.
3250 RAMOS CIRCLE
SACRAMENTO, CA 95827

BAY AREA TOLL AUTHORITY
375 BEALE STREET
SUITE 800
SAN FRANCISCO, CA 94105

LEGEND:

100 EXISTING 2"C, 2#10 (120 V CMS CONTROLLER).

101 3"C, 2#6 (120 V RM/CCTV CONTROLLER), 2#8 (120 V FB), 9#14, 1#8. 3"C, 1 HCC, 19 DLC.

102 3"C, 9#14, 1#8, 10 DLC.

103 2"C, 2#8 (120 V FB), 1 DLC.

104 3"C, 2#6 (120 V RM/CCTV CONTROLLER), 2#8 (120 V FB), 2#10 (120 V TDC), 8 DLC.

105 3"C, 2#6 (120 V RM/CCTV CONTROLLER), 2#10 (120 V TDC), 7 DLC.

106 2"C, 2#4 (240 V LIGHTING), 2#6 (120 V RM/CCTV CONTROLLER), 2#10 (120 V TDC), 3#14 (PEU).

107 EXISTING 1½"C, 2#6 (240 V LIGHTING), 2#12 (SPARE FOR FUTURE IRRIGATION CONTROLLER).

108 EXISTING 1½"C, 2#12 (SPARE FOR FUTURE IRRIGATION CONTROLLER).

109 2"C, 2#6 (240 V LIGHTING), 2#8 (240 V SIGN ILLUMINATION), 2#12 (120 V SIGN TEST SWITCH), 2 DLC.

110 2"C, 2#6 (240 V LIGHTING), 2#8 (240 V SIGN LIGHTING), 2#12 (SIGN TEST SWITCH), 4 DLC.

111 RS EXISTING PBA. INSTALL APS AS SHOWN.

112 EXISTING 2"C, 2#6 (120 V SIGNAL), 2#6 (240 V LIGHTING), 2#8 (240 V SIGN LIGHTING), 2#12 (120 V SIGN TEST SWITCH), 2#12 (120 V IRRIGATION), 5#14 (PEU).

113 EXISTING 2½"C, 2#6 (240 V LIGHTING), 2#12 (SPARE FOR FUTURE IRRIGATION CONTROLLER), 4 DLC. REMOVE 4 DLC. ADD 4 DLC.

114 EXISTING 2"C, 2#6 (240 V LIGHTING), 2#12 (SPARE FOR FUTURE IRRIGATION CONTROLLER), 2 DLC. REMOVE 2 DLC. ADD 2 DLC.

115 EXISTING 1½"C, 2#6 (240 V LIGHTING), 2#8 (240 V SIGN ILLUMINATION), 2#12 (120 V SIGN TEST SWITCH).

116 EXISTING 2½"C, 2#6 (240 V LIGHTING), 2#8 (240 V SIGN LIGHTING), 2#12 (120 V SIGN TEST SWITCH), 2#12 (SPARE FOR FUTURE IRRIGATION CONTROLLER), 1 SIC.

117 EXISTING 2½"C, 2#6 (240 V LIGHTING), 2#12 (SPARE FOR FUTURE IRRIGATION CONTROLLER), 1 SIC.

118 EXISTING 1½"C, 2#6 (240 V LIGHTING).

119 EXISTING 2"C, 2#6 (240 V LIGHTING), 2#12 (SPARE FOR FUTURE IRRIGATION CONTROLLER), 1 SIC.

120 EXISTING 2"C, 2#6 (240 V LIGHTING), 1 SIC.

121 EXISTING 1½"C, 2#8 (240 V LIGHTING), 2 DLC.

122 EXISTING 1½"C, 2#8 (240 V LIGHTING), 4 DLC.

123 2"C, 1 HCC.

124 INSTALL TYPE 1 SURFACE-MOUNTED CONDUIT UNDER UPPER DECK.

125 EXISTING 2"C, 2#1 (480 V CMS), 2#8 (480 V SIGN LIGHTING). REMOVE 2#1, 2#8. ADD 2#1, 2#8.

126 2"C, 2#6 (120 V LUS CONTROLLER), 2#6 (120 V TMS/CCTV CONTROLLER).

127 2"C, ONE 12-STRAND FO CABLE.

128 2"C, 2#6 (120 V CCTV CONTROLLER).

129 INSTALL 480 V, 80A, 3P BUCKET CB IN EXISTING ELECTRICAL MCC CABINET FOR TOS SERVICE.

130 2"C, 2#6 (120 V TMS/CCTV CONTROLLER).

131 2"C, 2#6 (120 V LUS CONTROLLER).

132 RS EXISTING METERED/UNMETERED TYPE III-AF SERVICE EQUIPMENT ENCLOSURE. INSTALL NEW METERED TYPE III-AF ON EXISTING FOUNDATION.

133 1½"C, 12#14 (LUS POWER), 3 CAT6 CABLES (LUS COMMUNICATION).

134 2"C, 12#14 (LUS POWER), 3 CAT6 CABLES (LUS COMMUNICATION), 2 HCC.

135 2"C, 2#6 (120 V LUS/CCTV CONTROLLER).

136 INSTALL EQUIPMENT ON EXISTING BRIDGE BARRIER. SEE "MISCELLANEOUS ELECTRICAL CONNECTION DETAILS 1" FOR MOUNTING DETAILS.

137 2"C, ONE 12-STRAND FO CABLE, 1 HCC.

138 INSTALL MODEL 330(T) CABINET WITH FIBER OPTIC NETWORK EQUIPMENT ON EXISTING BRIDGE STRUCTURE.

139 2"C, 2 HCC.

140 2"C, 2 HCC, 4 DLC.

141 3"C, 3 HCC, 10 DLC.

142 INSTALL TYPE II SERVICE DISTRIBUTION EQUIPMENT ENCLOSURE WITH 5.0 kVA 480V-120/240V STEP-DOWN TRANSFORMER ON EXISTING BRIDGE STRUCTURE. SEE WIRING DIAGRAM ON SHEET E-53. SEE "MISCELLANEOUS ELECTRICAL CONNECTION DETAILS 1" FOR MOUNTING DETAILS.

143 2"C, 12#14 (LUS POWER), 3 CAT6 CABLES (LUS COMMMUNICATION), 1 HCC.

144 3"C, 8#1 (480 V TOS SERVICE).

145 RS EXISTING SUBMERSIBLE STEP-DOWN TRANSFORMER.

146 2"C, 7#6 (480 V LIGHTING).

147 EXISTING 2"C, 7#6 (480 V LIGHTING).

148 2"C, 4#1 (480 V TOS SERVICE).

149 1"C, 2#6 (480 V LIGHTING). SURFACE-MOUNTED ON STRUCTURE.

150 INSTALL NEMA 4 JUNCTION BOX TO THE WALL.

151 2"C, 2#6 (120 V TMS/CCTV CONTROLLER).

152 EXISTING 1½"C, 2#8 (240 V LIGHTING).

153 EXISTING 1 LIGHTING CABLE (2#6) (480 V LIGHTING).

154 INSTALL LED VMS ON WOOD POSTS. SEE SHEET E-62 FOR DETAILS.

155 2"C, 2#6 (480 V LIGHTING).

156 EXISTING 3½"C, 4 LIGHTING CABLES (4#6) (480 V LIGHTING). ADD 4#6 (480 V TOS).

157 CONTRACTOR SHALL VERIFY LOCATION OF EXISTING RETAINING WALL TIE BACKS PRIOR TO CONSTRUCTING FOUNDATION. INSTALL FOUNDATION TO AVOID DAMAGE TO EXISTING WALL TIE BACKS. CUT POLE HEIGHT AS NEEDED SUCH THAT LED LUMINAIRE IS 40' ABOVE ROADWAY GRADE.

158 EXISTING 2"C, ONE 12-STRAND FO CABLE.

159 EXISTING 2"C, ONE 36-STRAND FO CABLE.

160 EXISTING 2"C, 6#6 (120 V CMS), 2#14 (120 V CMS CONTROLLER).

161 EXISTING 2"C, 6#6 (120 V CMS).

162 EXISTING 2"C, 2#14 (120 V CMS CONTROLLER).

163 2-3"C, 1 HCC, 14 DLC.

164 2"C, 2#4 (120 V CCTV/TMS CONTROLLER)

165 EXISTING 2"C, 2#1 (480 V CMS).

166 3"C, 1 HCC, 10 DLC.

167 TERMINATE ONE 72-STRAND FO CABLE INSIDE THE CABINET FOR FUTURE FO CABLE TO SUBSTATION 2 OR 3 AS SHOWN.

168 SURFACE MOUNT TYPE 1 CONDUIT ON Exist BRIDGE BARRIER.

169 2"C, 4 DLC.

170 INSTALL 120 V, 30A, 1P CB FOR FIBER OPTIC CABINET IN EXISING 120/208 V ELECTRICAL PANEL.

171 EXISTING 2-3"C, 1 LIGHTING CABLE (4#6) (480 V LIGHTING).

172 2-3"C, 2#6 (120 V TMS/CCTV CONTROLLER), 1 HCC, 10 DLC.

173 EXISTING 2"C, 1 LIGHTING CABLE (4#6) (480 V LIGHTING).

174 EXISTING 4"C, 1 CALL BOX SUPERVISORY CABLE (50 PR #20), 2 CALL BOX CABLES (4#18). ADD TWO 72-STRAND FO CABLES.

175 RS EXISTING PEDESTRIAN SIGNAL. INSTALL NEW COUNT-DOWN TYPE PEDESTRIAN SIGNAL.

176 EXISTING 11#2"C, 2#6 (480 V LIGHTING).

177 2"C TYPE 1, TWO 72-STRAND FO CABLES.

178 SEE SHEETS E-55 AND E-63 FOR TRAFFIC MONITORING LOOP INSTALLATION DETAILS.

179 SEE STRUCTURAL PLANS "LIGHT POLE PEDESTAL DETAILS" FOR FOUNDATION DETAILS.

180 RC EXISTING HPS LUMINAIRE. INSTALL ROADWAY 1 LED LUMINAIRE.

181 INSTALL 480 V, 50A, 3P BUCKET CB IN EXISTING ELECTRICAL MCC CABINET FOR TOS SERVICE.

182 INSTALL FIBER OPTIC PULL BOX. SEE DETAIL ON SHEET E-64.

183 INSTALL FIBER OPTIC SPICE ENCLOSURE INSIDE THIS PULL BOX.

184 2"C, ONE 12-STRAND FO CABLE.

185 RC EXISTING PULL BOX. INSTALL A NEW PULL BOX AS SHOWN ON THE PLAN.

1 186 ~~RS~~ RC EXISTING HPS LUMINAIRE. INSTALL ROADWAY 2 LED LUMINAIRE.

187 2"C, 2#12 (FOR FUTURE IRRIGATION CONTROLLER), 4 DLC.

188 2"C, 2#12 (FOR FUTURE IRRIGATION CONTROLLER).

189 INSTALL CONDUIT TO FOLLOW EXISTING CONDUIT RUNS UP TO LOWER DECK.

190 INSTALL FOUNDATION BEHIND RETAINING WALL. AVOID DAMAGE TO THE RETAINING WALL SOIL NAILS, GUTTER AND DRAINAGE ELEMENTS.

191 EXISTING 2"C, 2#12 (SPARE FOR FUTURE IRRIGATION CONTROLLER), 2 DLC, 1 SIC.

192 EXISTING 2"C, 2#8 (240 LIGHTING), 2#12 (SPARE FOR FUTURE IRRIGATION CONTROLLER), 2 DLC, 1 SIC.

193 EXISTING 2"C, 2#8 (240 V LIGHTING), 2#12 (SPARE FOR FUTURE IRRIGATION CONTROLLER), 4 DLC, 1 SIC.

194 EXISTING 1½"C, 2#6 (120 V SIGNAL), 2#6 (240 V LIGHTING), 3#14 (PEU), 2#12 (SPARE FOR FUTURE IRRIGATION CONTROLLER).

195 2"C, 2#12 (120 V IRRIGATION).

196 2"C, 2#6 (240 V LIGHTING), 2#12 (120 V IRRIGATION).

197 3"C, 2#6 (120 V VMS CONTROLLER), 2#8 (120 V FB), 6#14, 1#8. 3"C, 1 HCC, 21 DLC.

198 EXISTING 3½"C, 1 LIGHTING CABLE (4#6) (480 V LIGHTING).

199 INSTALL TYPE 15-SB LIGHTING STANDARD WITH ROADWAY 1 LED LUMINAIRE.

200 EXISTING 3"C, 2 LIGHTING CABLES (4#6) (480 V LIGHTING).

201 EXISTING 2-3"C, 2 LIGHTING CABLES (4#6) (480 V LIGHTING).

202 SEE CONSTRUCTION DETAILS SHEET FOR LIGHT POLE PEDESTAL DETAILS.

203 INSTALL CCTV ROUTER IN CONTROLLER CABINET.

204 2½"C, 4#2/0 (480 V TOS SERVICE).

1 **REPLACED PER ADDENDUM No. 1 DATED SEPTEMBER 23, 2016**

LEGEND

E-3

REVISED BY	DATE REVISED
MY	7-29-16

MENG YANG — DAN YAU
CALCULATED-DESIGNED BY — CHECKED BY
FUNCTIONAL SUPERVISOR — CHADI CHAZBEK

STATE OF CALIFORNIA - DEPARTMENT OF TRANSPORTATION
Caltrans

LAST REVISION 07-29-16 | DATE PLOTTED => 9/22/2016 TIME PLOTTED => 5:19:26 PM

Dist	COUNTY	ROUTE	POST MILES TOTAL PROJECT	SHEET No.	TOTAL SHEETS
04	CC, Mrn	580	5.0/7.8, 0.0/3.3	330	579

REGISTERED CIVIL ENGINEER 7-29-16 DATE

7-29-16
PLANS APPROVAL DATE

REGISTERED PROFESSIONAL ENGINEER KIN Y. CHAN No. 55391 Exp. 12-31-16 CIVIL STATE OF CALIFORNIA

THE STATE OF CALIFORNIA OR ITS OFFICERS OR AGENTS SHALL NOT BE RESPONSIBLE FOR THE ACCURACY OR COMPLETENESS OF SCANNED COPIES OF THIS PLAN SHEET.

Y&C TRANSPORTATION CONSULTANTS, INC.
3250 RAMOS CIRCLE
SACRAMENTO, CA 95827

BAY AREA TOLL AUTHORITY
375 BEALE STREET
SUITE 800
SAN FRANCISCO, CA 94105

NOTE:

FOR ACCURATE RIGHT OF WAY DATA, CONTACT RIGHT OF WAY ENGINEERING AT THE DISTRICT OFFICE.

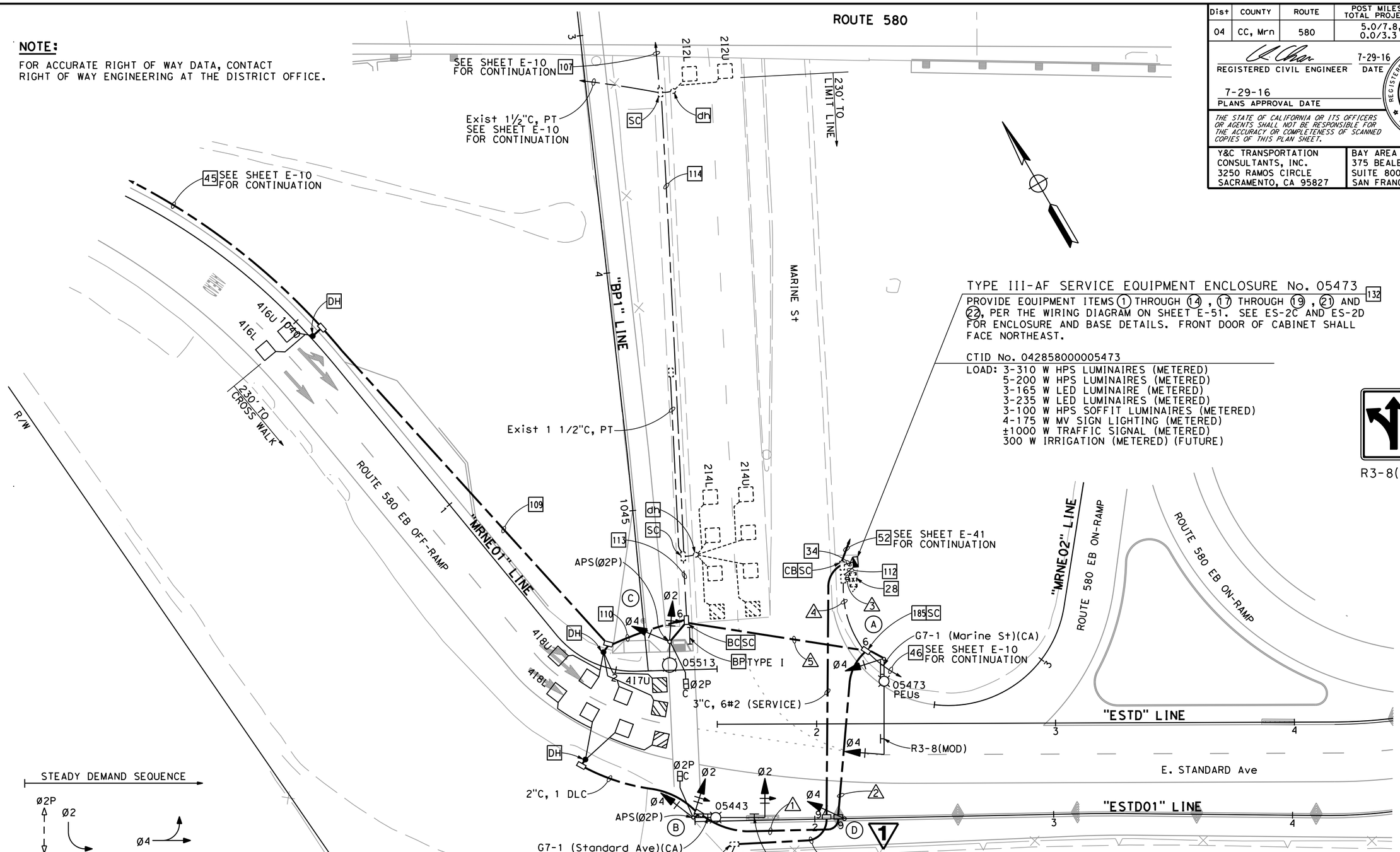

TYPE III-AF SERVICE EQUIPMENT ENCLOSURE No. 05473 132

PROVIDE EQUIPMENT ITEMS 1 THROUGH 14, 17 THROUGH 19, 21 AND 22, PER THE WIRING DIAGRAM ON SHEET E-51. SEE ES-2C AND ES-2D FOR ENCLOSURE AND BASE DETAILS. FRONT DOOR OF CABINET SHALL FACE NORTHEAST.

CTID No. 042858000005473

LOAD: 3-310 W HPS LUMINAIRES (METERED)
5-200 W HPS LUMINAIRES (METERED)
3-165 W LED LUMINAIRE (METERED)
3-235 W LED LUMINAIRES (METERED)
3-100 W HPS SOFFIT LUMINAIRES (METERED)
4-175 W MV SIGN LIGHTING (METERED)
±1000 W TRAFFIC SIGNAL (METERED)
300 W IRRIGATION (METERED) (FUTURE)

R3-8(MOD)

EXISTING SYSTEM No. 28-580-05473
PG&E SERVICE (120/240 V)
SEE SHEET E-41 FOR ADDITIONAL LOADS

1 **REPLACED PER ADDENDUM No. 1 DATED SEPTEMBER 23, 2016**

FOR NOTES, ABBREVIATIONS, SYMBOLS AND LEGEND, SEE SHEETS E-1 TO E-3

SIGNAL AND LIGHTING (LOCATION 1)

APPROVED FOR ELECTRICAL WORK ONLY

MODIFY EXISTING ELECTRICAL SYSTEM

SCALE: 1" = 20'

E-44

MY	7-29-16
REVISED BY	DATE REVISED
MENG YANG	DAN YAU
CALCULATED-DESIGNED BY	CHECKED BY
FUNCTIONAL SUPERVISOR	CHADI CHAZBEK

STATE OF CALIFORNIA - DEPARTMENT OF TRANSPORTATION

Caltrans

LAST REVISION 07-29-16 | DATE PLOTTED => 9/22/2016 | TIME PLOTTED => 5:18:13 PM

BORDER LAST REVISED 7/2/2010 | USERNAME => myang | DGN FILE => ...\0414000552ua044 Addendum 1 (2016-09-23).dgn | RELATIVE BORDER SCALE IS IN INCHES 0 1 2 3 | UNIT 0746 | PROJECT NUMBER & PHASE 04140005521

Dist	COUNTY	ROUTE	POST MILES TOTAL PROJECT	SHEET No.	TOTAL SHEETS
04	CC, Mrn	580	5.0/7.8, 0.0/3.3	331	579

REGISTERED CIVIL ENGINEER — DATE 7-29-16

7-29-16
PLANS APPROVAL DATE

REGISTERED PROFESSIONAL ENGINEER — KIN Y. CHAN — No. 55391 — Exp. 12-31-16 — CIVIL — STATE OF CALIFORNIA

THE STATE OF CALIFORNIA OR ITS OFFICERS OR AGENTS SHALL NOT BE RESPONSIBLE FOR THE ACCURACY OR COMPLETENESS OF SCANNED COPIES OF THIS PLAN SHEET.

Y&C TRANSPORTATION CONSULTANTS, INC.
3250 RAMOS CIRCLE
SACRAMENTO, CA 95827

BAY AREA TOLL AUTHORITY
375 BEALE STREET
SUITE 800
SAN FRANCISCO, CA 94105

CONDUCTOR AND CONDUIT SCHEDULE

CONDUCTOR SCHEDULE	No. OF CONDUCTORS — CONDUIT RUN NUMBER 1	2	3	4	5	6	7	8
No. 14 CONDUCTORS								
Ø2	3	3	6	6	3			
Ø4	3	3	6	6	3			
Ø2P	2	2	4	4	2			
APS(Ø2P)	2	2	2	2	2			
PHOTOELECTRIC UNIT				5				
SPARES	3	3	3	3	3			
TOTAL No. 14	13	13	21	26	13			
No. 12 CONDUCTORS								
IRRIGATION (120 V)				2	2			
SIGN TEST SWITCH (120 V)				2	2			
TOTAL No. 12				4	4			
No. 8 CONDUCTORS								
SIGN ILLUMINATION (240 V)				2	2			
SIGNAL NEUTRAL	1	1	1	1	1			
TOTAL No. 8	1	1	1	3	3			
No. 6 CONDUCTORS								
SERVICE TO CONTROLLER (120 V)			2					
LIGHTING (240 V)	2	2		2	2			
TOTAL No. 6	2	2	2	2	2			
DETECTOR CABLES (DLC)								
2I2U			1	1	1			
2I1L			1	1	1			
2I4U			1	1	1			
2I4L			1	1	1			
4I6U			1	1	1			
4I6L	1	1	1	1				
4I7U			1	1	1			
4I8U			1	1	1			
4I8L			1	1	1			
TOTAL DETECTOR CABLES	1	1	9	9	8			
CONDUIT SIZE (INCHES)	3	3	2½	2-3	3			
NEW/EXISTING CONDUIT (N/E)	N	N	E	E	N			
% FILL	8	8	27	11	18			

NOTE: ALL CONDUCTORS/CABLES MUST BE NEW.

POLE AND EQUIPMENT SCHEDULE

No.	STANDARD TYPE	SMA (FEET)	LMA (FEET)	VEHICLE SIGNAL MOUNTING MAST ARM	POLE	PEDESTRIAN SIGNAL MOUNTING	APS Ø	APS ARROW	LED (WATTS Max.)	REMARKS
A	26-4-100	40	15	MAS	SV-1-T				165	INSTALL R3-8(MOD) AND G7-1(CA) SIGNS ON SMA.
B	19-4-100	30	15	MAT	SV-2-TB	SP-1-T	2P	→	165	
C	15TS		15		SV-2-TB	SP-1-T	2P	←	165	INSTALL R73-6(CA) AND G7-1(CA) SIGNS ON SMA.
D	1-B				TV-1-T					

1

SIGNAL AND LIGHTING (LOCATION 1)
(CONDUCTOR AND CONDUIT, POLE AND EQUIPMENT SCHEDULES)

MODIFY EXISTING ELECTRICAL SYSTEM
NO SCALE

1 **REPLACED PER ADDENDUM No. 1 DATED SEPTEMBER 23, 2016**

E-45

MY	7-29-16
REVISED BY	DATE REVISED
MENG YANG	DAN YAU
CALCULATED-DESIGNED BY	CHECKED BY
FUNCTIONAL SUPERVISOR	CHADI CHAZBEK

STATE OF CALIFORNIA - DEPARTMENT OF TRANSPORTATION
Caltrans

LAST REVISION 07-29-16 | DATE PLOTTED => 9/22/2016 | TIME PLOTTED => 5:20:20 PM

Dist	COUNTY	ROUTE	POST MILES TOTAL PROJECT	SHEET No.	TOTAL SHEETS
04	CC, Mrn	580	5.0/7.8, 0.0/3.3	348	579

REGISTERED CIVIL ENGINEER 7-29-16 DATE

7-29-16
PLANS APPROVAL DATE

REGISTERED PROFESSIONAL ENGINEER KIN Y. CHAN No. 55391 Exp. 12-31-16 CIVIL STATE OF CALIFORNIA

THE STATE OF CALIFORNIA OR ITS OFFICERS OR AGENTS SHALL NOT BE RESPONSIBLE FOR THE ACCURACY OR COMPLETENESS OF SCANNED COPIES OF THIS PLAN SHEET.

Y&C TRANSPORTATION CONSULTANTS, INC.
3250 RAMOS CIRCLE
SACRAMENTO, CA 95827

BAY AREA TOLL AUTHORITY
375 BEALE STREET
SUITE 800
SAN FRANCISCO, CA 94105

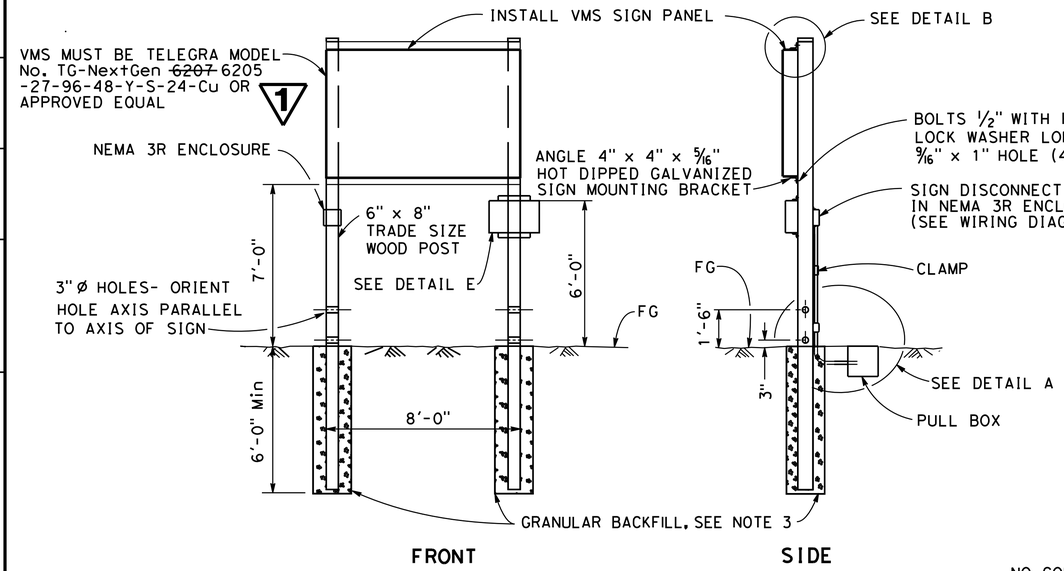

ELEVATION

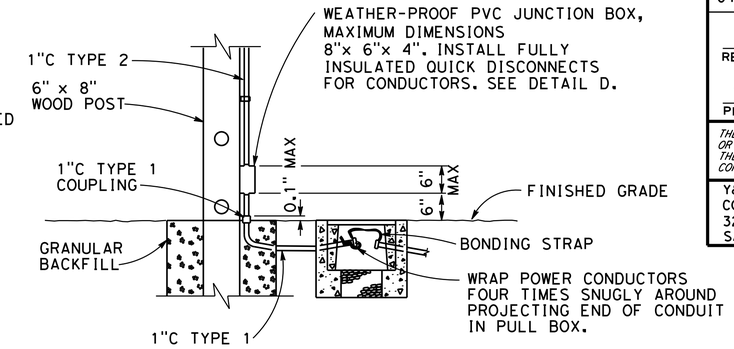

DETAIL A
CONDUIT BREAKAWAY

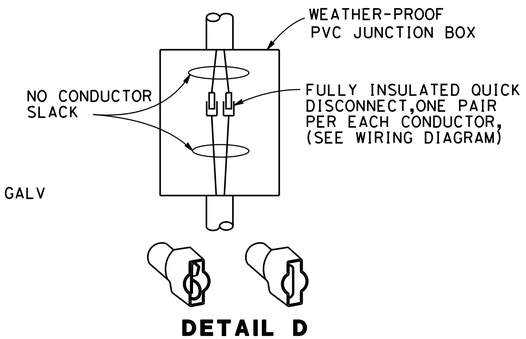

DETAIL D
DISCONNECTS FOR POWER CONDUCTORS

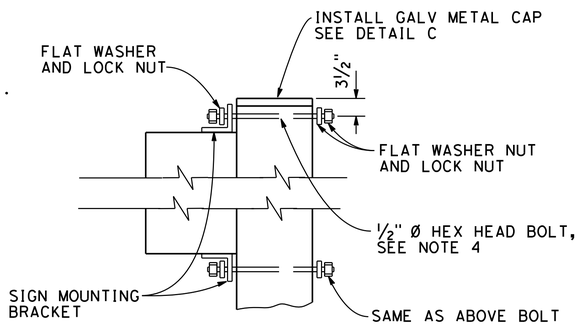

DETAIL B

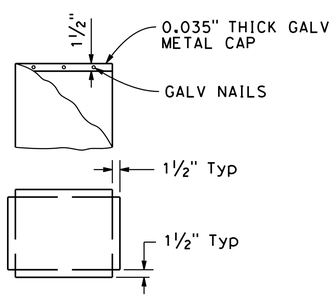

DETAIL C
GALV METAL CAP
(MATCH THE DIMENSIONS OF POST TOP)

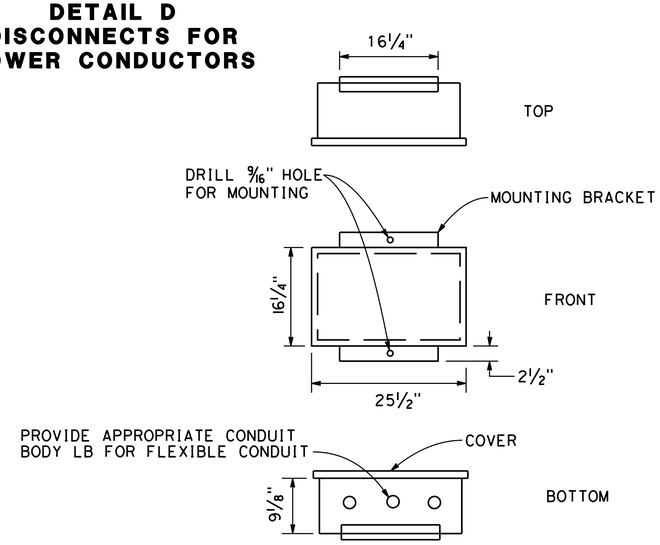

DETAIL E
SIGN CONTROLLER ASSEMBLY

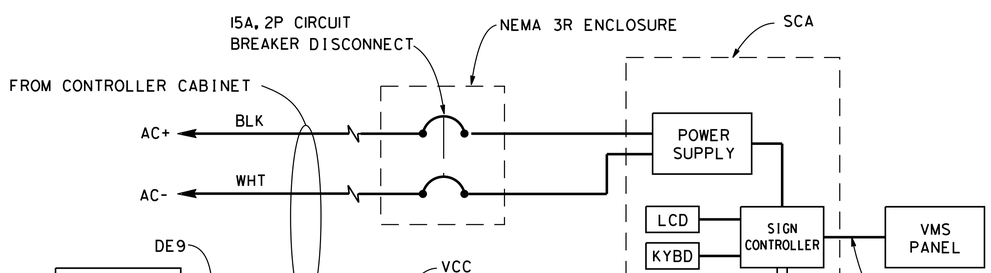

WIRING DIAGRAM

FOR NOTES, ABBREVIATIONS, SYMBOLS AND LEGEND, SEE SHEETS E-1 TO E-3

LEGEND

SIC	SIGN INTERFACE CABLE
VMS	VARIABLE MESSAGE SIGN
VCC	VMS CONTROL CABLE
SCA	SIGN CONTROLLER ASSEMBLY
KYBD	KEYBOARD
LCD	LIQUID CRYSTAL DISPLAY

GENERAL NOTES

DESIGN:
AASHTO SPECIFICATIONS FOR STRUCTURAL SUPPORTS FOR HIGHWAY SIGNS, LUMINARIES AND TRAFFIC SIGNALS, DATED 2004

CONSTRUCTION:
2010 STANDARD SPECIFICATIONS AND THE SPECIAL PROVISIONS STATE OF CALIFORMIA DEPARTMENT OF TRANSPORTATION
2010 STANDARD PLANS
STATE OF CALIFORNIA DEPARTMENT OF TRANSPORTATION AND CURRENT REVISED PLANS

LOADING:
WIND LOADING:
40 PSF APPLIED LOAD COMBINATIONS PER 3.9 AASHTO SPECIFICATIONS FOR STRUCTURAL SUPPORTS FOR HIGHWAY SIGNS, LUMINARIES AND TRAFFIC SIGNALS, DATED 2004

2010 STANDARD PLANS

A10A	ACRONYMS AND ABBREVIATIONS (A-L)
A10B	ACRONYMS AND ABBREVIATIONS (M-Z)
RS1	ROADSIDE SIGNS TYPICAL INSTALLATIONS DETAIL No. 1
RS2	ROADSIDE SIGNS TYPICAL INSTALLATION DETAIL No. 2

NOTES:

1. FOR DETAILS NOT SHOWN, SEE "2010 STANDARD PLANS" AND "2010 REVISED STANDARD PLANS".
2. FOR SIGN LOCAITON SEE "PROJECT PLANS".
3. DIAMETER FOR POST HOLES SHALL BE AT LEAST 2'-6".
4. REFER TO SIGN MANUFACTURER TO VERIFY BOLT HOLE LAYOUT AND LENGTH.

ELECTRICAL DETAILS
(VMS WITH SIGN CONTROL ASSEMBLY)

NO SCALE

1 REPLACED PER ADDENDUM No. 1 DATED SEPTEMBER 23, 2016

E-62

CALCULATED-DESIGNED BY	MY	REVISED BY	MENG YANG	FUNCTIONAL SUPERVISOR	STATE OF CALIFORNIA - DEPARTMENT OF TRANSPORTATION
CHECKED BY	7-29-16	DATE REVISED	DAN YAU	CHADI CHAZBEK	Caltrans

LAST REVISION 07-29-16 | DATE PLOTTED => 9/22/2016 | TIME PLOTTED => 5:21:38 PM

DIST	COUNTY	ROUTE	POST MILES TOTAL PROJECT	SHEET No	TOTAL SHEETS
04	CC,Mrn	580	5.0/7.8, 0.0/3.3	507	579

1

REGISTERED CIVIL ENGINEER 07-14-16 DATE

07-26-16
PLANS APPROVAL DATE

REGISTERED PROFESSIONAL ENGINEER E. OKADA No. S4415 Exp. 6-30-18 STRUCTURAL STATE OF CALIFORNIA

The State of California or its officers or agents shall not be responsible for the accuracy or completeness of scanned copies of this plan sheet.

HNTB CORPORATION
1111 BROADWAY
9TH FLOOR
OAKLAND, CA 94607

BAY AREA TOLL AUTHORITY
375 BEALE STREET, SUITE 800
SAN FRANCISCO, CA 94105

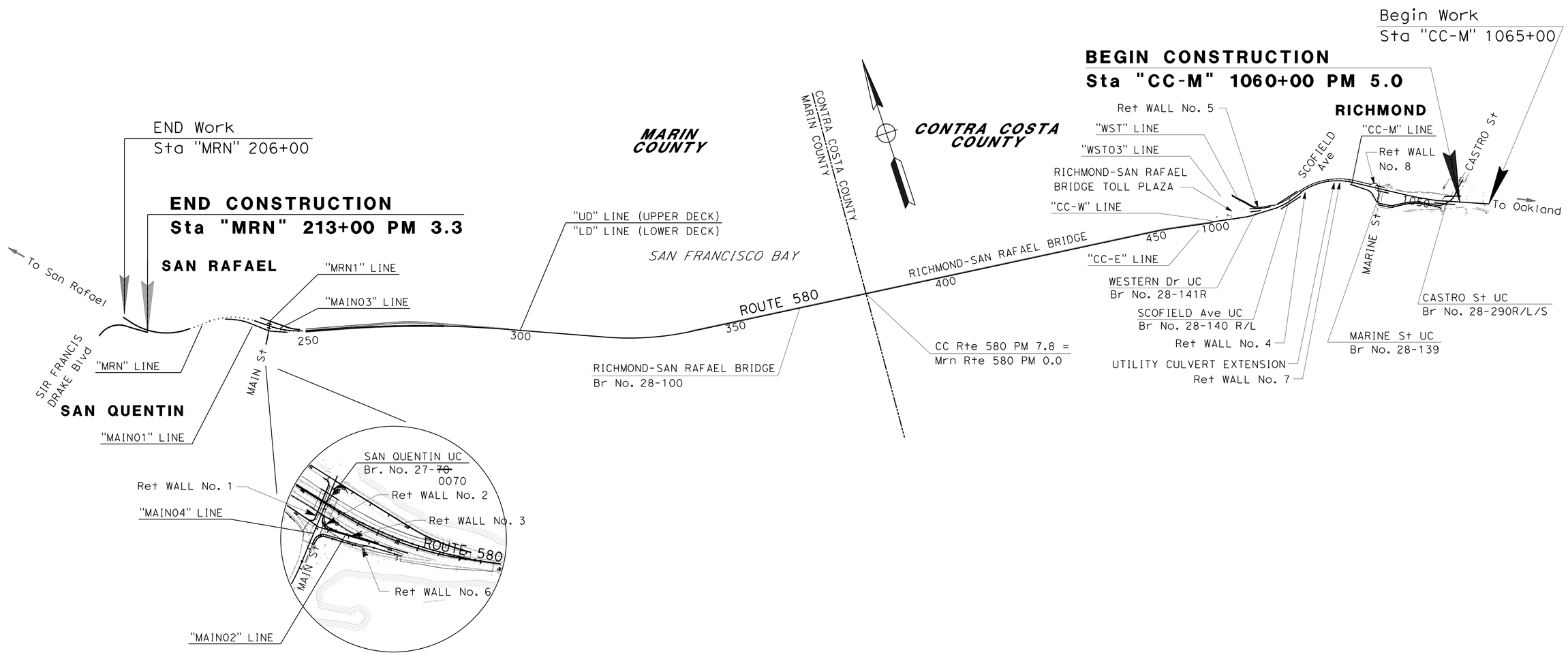

NO SCALE

1 **REPLACED PER ADDENDUM No. 1 DATED SEPTEMBER 23, 2016**

DESIGN OVERSIGHT 07-14-16 SIGN OFF DATE	DESIGN	BY E. Okada	CHECKED M. Vargas	PREPARED FOR THE STATE OF CALIFORNIA DEPARTMENT OF TRANSPORTATION	Erik Okada PROJECT ENGINEER
	DETAILS	BY H. Li	CHECKED E. Okada		
	QUANTITIES	BY E. Okada	CHECKED M. Vargas		

BRIDGE NO. VARIES
POST MILES 5.0/7.8, 0.0/3.3

RETAINING WALLS
KEY MAP AND LINE INDEX

DESIGN DETAIL SHEET (ENGLISH) (REV. 03/14/12)

ORIGINAL SCALE IN INCHES FOR REDUCED PLANS 0 1 2 3

UNIT: 0746
PROJECT NUMBER & PHASE: 04140005521 CONTRACT NO.: 04-2J6804

DISREGARD PRINTS BEARING EARLIER REVISION DATES

REVISION DATES

SHEET 1 OF 33

FILE => 001-28-0100-a-map.dgn

USERNAME => $USER$ DATE PLOTTED => $DATE$ TIME PLOTTED => $TIME$

DIST	COUNTY	ROUTE	POST MILES TOTAL PROJECT	SHEET No	TOTAL SHEETS
04	CC,Mrn	580	5.0/7.8, 0.0/3.3	509	579

REGISTERED CIVIL ENGINEER 07-14-16 DATE

07-26-16
PLANS APPROVAL DATE

REGISTERED PROFESSIONAL ENGINEER E. OKADA No. S4415 Exp. 6-30-18 STRUCTURAL STATE OF CALIFORNIA

The State of California or its officers or agents shall not be responsible for the accuracy or completeness of scanned copies of this plan sheet.

HNTB CORPORATION
1111 BROADWAY
9TH FLOOR
OAKLAND, CA 94607

BAY AREA TOLL AUTHORITY
375 BEALE STREET, SUITE 800
SAN FRANCISCO, CA 94105

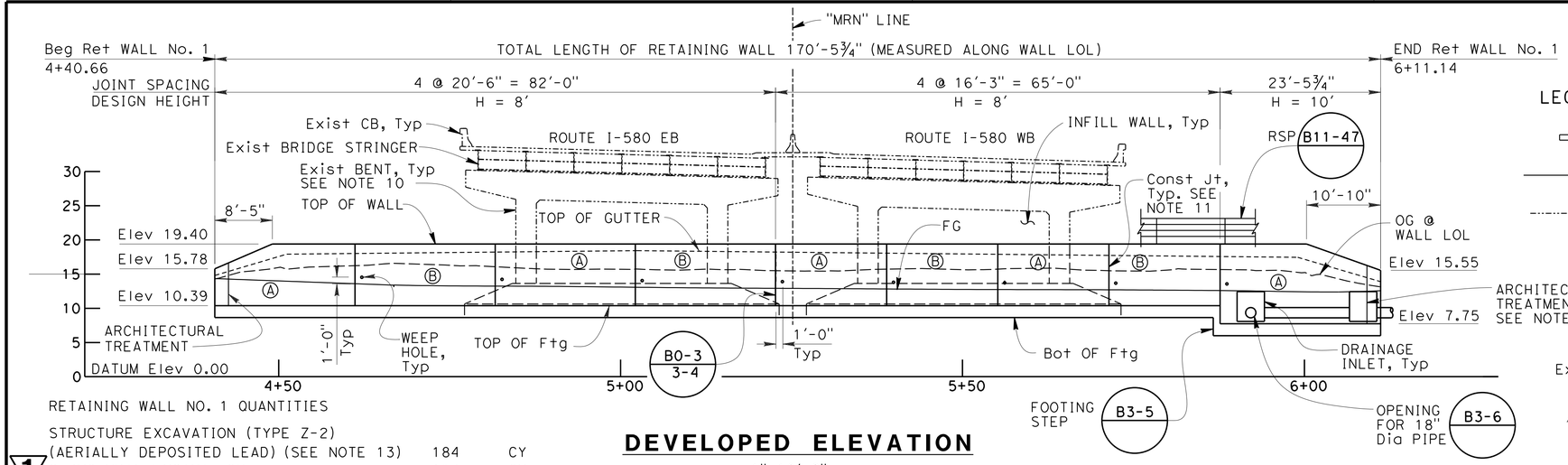

DEVELOPED ELEVATION

1"=10'-0"

RETAINING WALL NO. 1 QUANTITIES

STRUCTURE EXCAVATION (TYPE Z-2) (AERIALLY DEPOSITED LEAD) (SEE NOTE 13)	184	CY
1 ~~STRUCTURAL EXCAVATION~~	154	CY
STRUCTURE BACKFILL (RETAINING WALL)	95	CY
STRUCTURAL CONCRETE, RETAINING WALL	178	CY
BAR REINFORCING STEEL (RETAINING WALL)	21,926	LB
MINOR CONCRETE (GUTTER)	170	LF
1 ~~GEOCOMPOSITE DRAIN~~ 1	~~443~~	~~SQFT~~
CABLE RAILING	170	LF
LEAN CONCRETE BASE	84	CY
ARCHITECTURAL TREATMENT	1,558	SQFT

1 STRUCTURE EXCAVATION (RETAINING WALL)

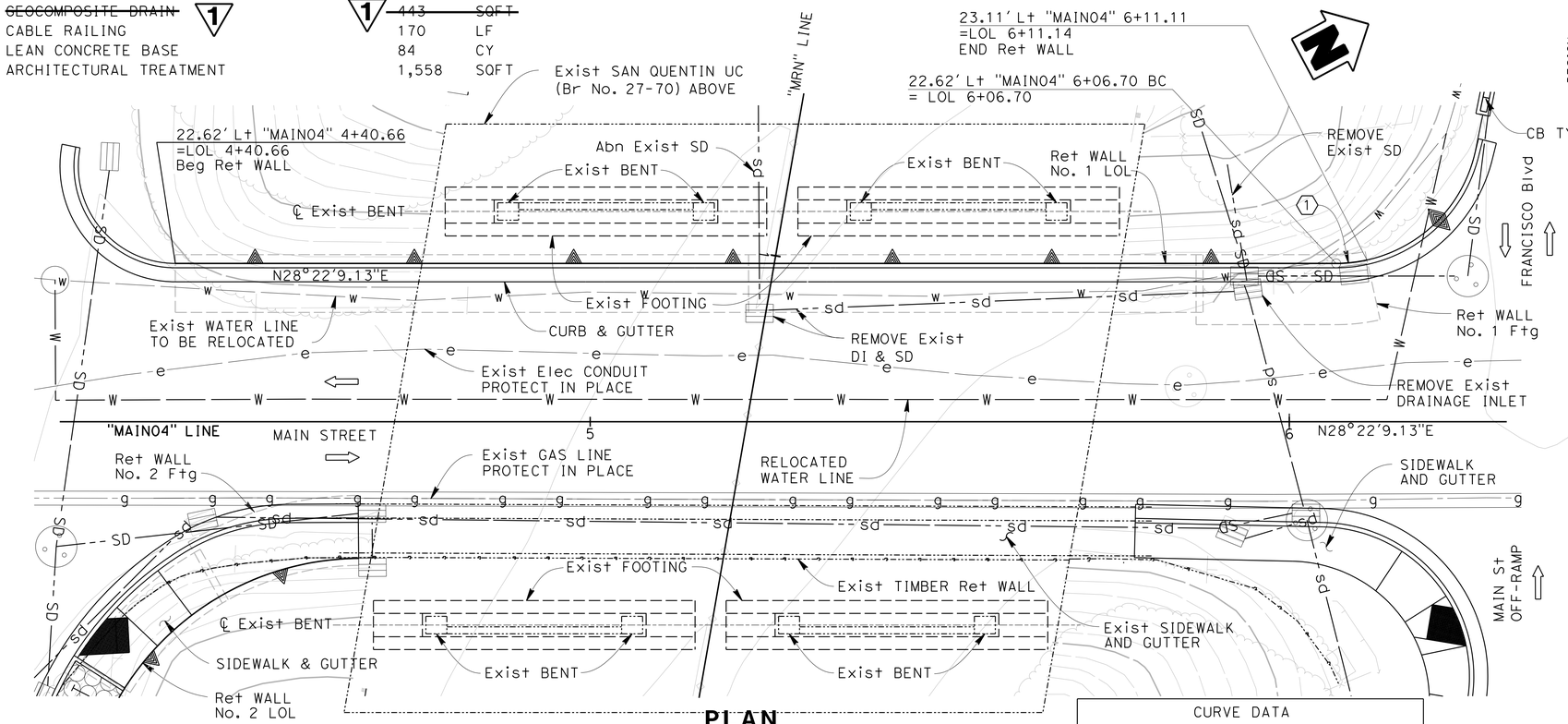

PLAN

1"=10'-0"

CURVE DATA				
No.	R	Δ	T	L
1	20.38'	12°28'32"	2.23'	4.4'

1 REPLACED PER ADDENDUM No. 1 DATED SEPTEMBER 23, 2016

LEGEND:

- INDICATES DIRECTION OF TRAFFIC
- CONCRETE RETAINING WALL
- EXISTING STRUCTURE

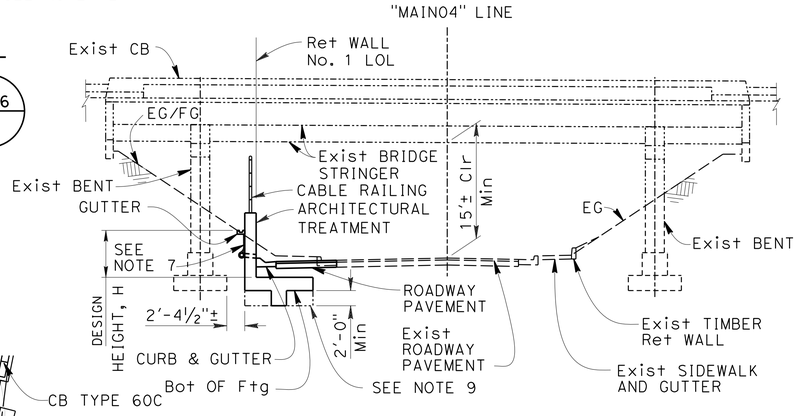

TYPICAL SECTION

NO SCALE

NOTES:

1. For roadway information see "ROADWAY PLANS".
2. For utility information see "UTILITY PLANS".
3. For drainage information see "DRAINAGE PLANS".
4. For wall stem joint details see 2010 Standard Plan B0-3.
5. Controlling field conditions to be verified prior to start of construction.
6. For wall details not shown see 2010 Standard Plans B3-5 and B3-6, and sheet "RETAINING WALL - DETAILS.
7. For weephole and wall drain details, see sheet "RETAINING WALL - DRAIN DETAILS".
8. For cable railing, see 2010 Standard Plan RSP B11-47.
9. Over excavate existing soil and replace with lean concrete base.
10. The existing bents and footings shall be protected during construction. See required construction sequence.
11. For construction joint details, see "CONSTRUCTION JOINT DETAIL" on "RETAINING WALL DETAILS" sheet.
12. For architectural treatment, see "ARCHITECTURAL PLANS".
13. For Limits Of Payment see "RETAINING WALL - DETAILS" Sheet.

REQUIRED CONSTRUCTION SEQUENCE

1. Excavate soil in retaining wall sections (A)
2. Form and construct shear key
3. Replace soil with lean concrete base
4. Form and construct footing and walls
5. Backfill
6. Excavate soil in retaining wall sections (B)
7. Form and construct shear key
8. Replace soil with lean concrete base
9. Form and construct footing and walls
10. Backfill

DESIGN OVERSIGHT 07-14-16 SIGN OFF DATE	DESIGN	BY G. Iwamoto	CHECKED G. Yu	LOAD & RESISTANCE FACTOR DESIGN	LIVE LOADING: HL-93
	DETAILS	BY H. Paige	CHECKED G. Yu	LAYOUT BY H. Paige	CHECKED G. Iwamoto
	QUANTITIES	BY G. Iwamoto	CHECKED G. Yu	SPECIFICATIONS BY D. Desai	PLANS AND SPECS COMPARED D. Desai

PREPARED FOR THE STATE OF CALIFORNIA DEPARTMENT OF TRANSPORTATION

Erik Okada
PROJECT ENGINEER

BRIDGE NO. 27E0068
POST MILES 2.63

RETAINING WALL No. 1
PLAN AND ELEVATION

DESIGN GENERAL PLAN SHEET (ENGLISH) (REV. 06-01-09)

ORIGINAL SCALE IN INCHES FOR REDUCED PLANS 0 1 2 3

UNIT: 0746
PROJECT NUMBER & PHASE: 04140005521

DISREGARD PRINTS BEARING EARLIER REVISION DATES

REVISION DATES (PRELIMINARY STAGE ONLY)

SHEET 3 OF 33

FILE => 003-27-0070-g-rw_1o01.dgn

USERNAME => rhuitt DATE PLOTTED => 9/23/2016 TIME PLOTTED => 9:50:36 AM

DIST	COUNTY	ROUTE	POST MILES TOTAL PROJECT	SHEET No	TOTAL SHEETS
04	CC,Mrn	580	5.0/7.8, 0.0/3.3	510	579

REGISTERED CIVIL ENGINEER 07-14-16 DATE

07-26-16
PLANS APPROVAL DATE

REGISTERED PROFESSIONAL ENGINEER E. OKADA No. S4415 Exp. 6-30-18 STRUCTURAL STATE OF CALIFORNIA

The State of California or its officers or agents shall not be responsible for the accuracy or completeness of scanned copies of this plan sheet.

HNTB CORPORATION
1111 BROADWAY
9TH FLOOR
OAKLAND, CA 94607

BAY AREA TOLL AUTHORITY
375 BEALE STREET, SUITE 800
SAN FRANCISCO, CA 94105

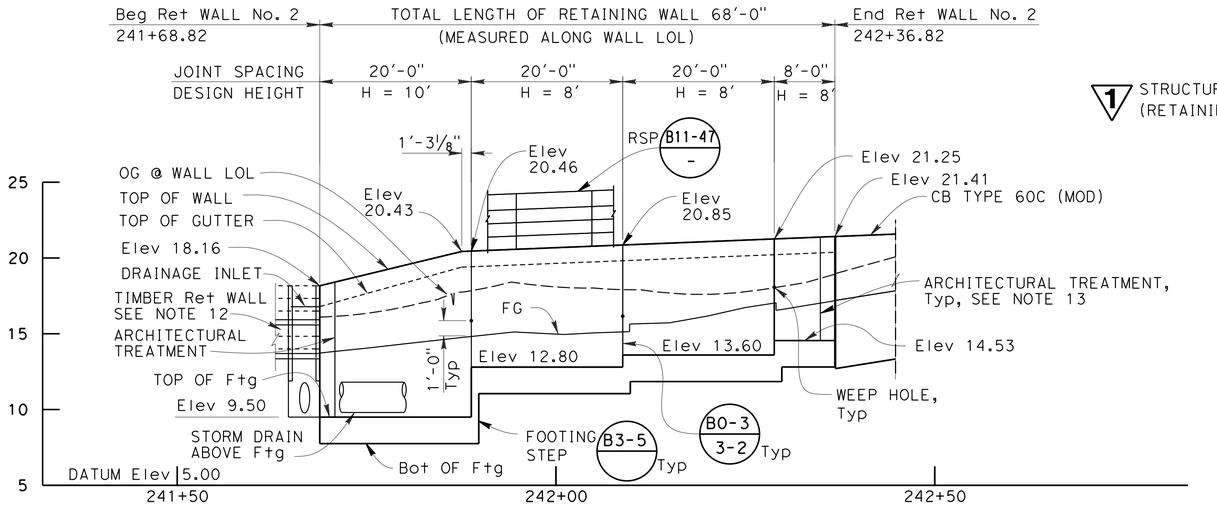

DEVELOPED ELEVATION

Horiz. 1"=10'-0"
Vert. 1"=5'-0"

1 STRUCTURE EXCAVATION (RETAINING WALL)

RETAINING WALL NO. 2 QUANTITIES

STRUCTURE EXCAVATION (TYPE Z-2) (AERIALLY DEPOSITED LEAD) (SEE NOTE 14)	113	CY
~~STRUCTURAL EXCAVATION~~	59	CY
STRUCTURE BACKFILL (RETAINING WALL)	72	CY
STRUCTURAL CONCRETE (RETAINING WALL)	71	CY
BAR REINFORCING STEEL (RETAINING WALL)	8,794	LB
MINOR CONCRETE (GUTTER)	68	LF
1 ~~GEOCOMPOSITE DRAIN~~ 1	~~95~~	~~SQFT~~
CABLE RAILING	68	LF
LEAN CONCRETE BASE	34	CY
REMOVE RETAINING WALL (WOOD)	45	LF
TIMBER RETAINING WALL	35	SQFT
TREATED WOOD WASTE	1,000	LB
ARCHITECTURAL TREATMENT	558	SQFT

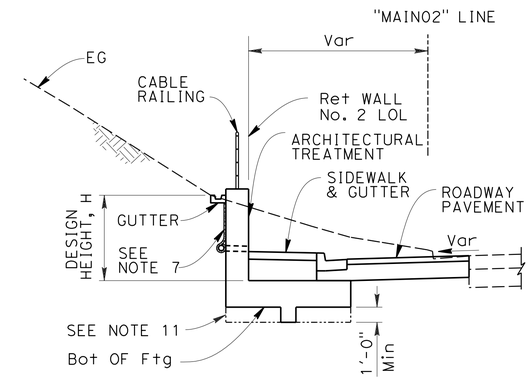

TYPICAL SECTION

NO SCALE

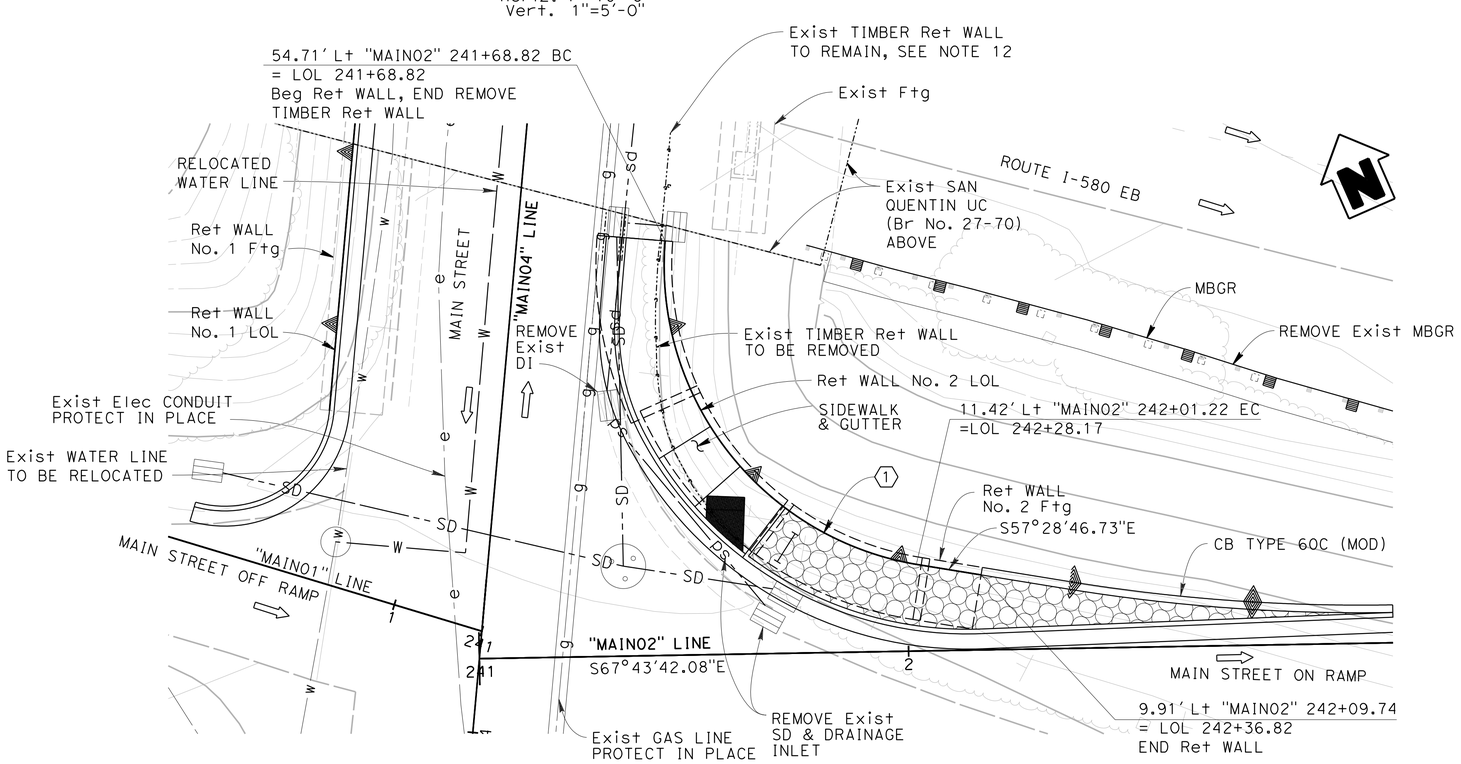

PLAN

1"=10'-0"

CURVE DATA				
No.	R	Δ	T	L
1	40'	85°01'00"	36.66'	59.35'

NOTES:

1. For roadway information see "ROADWAY PLANS".
2. For utility information see "UTILITY PLANS".
3. For drainage information see "DRAINAGE PLANS".
4. For wall stem joint details see 2010 Standard Plan B0-3.
5. Controlling field conditions to be verified prior to start of construction.
6. For wall details not shown see 2010 Standard Plans B3-5 and B3-6, and sheet "RETAINING WALL - DETAILS".
7. For weephole and wall drain details see sheet "RETAINING WALL - DRAIN DETAILS".
8. For cable railing, see 2010 Standard Plan RSP B11-47.
9. Location of existing conduit to be determined.
10. For barrier type 60C (MOD) details, see sheet "CONCRETE BARRIER TYPE 60C (MOD)".
11. Over excavate existing soil and replace with lean concrete base.
12. See "TIMBER WALL DETAIL" on "RETAINING WALL - DETAILS" sheet.
13. For architectural treatment, see "ARCHITECTURAL PLANS".
14. For Limits Of Payment see "RETAINING WALL - DETAILS" Sheet.

LEGEND:

- INDICATES DIRECTION OF TRAFFIC
- CONCRETE RETAINING WALL
- EXISTING STRUCTURE
- CONCRETE BARRIER

1 **REPLACED PER ADDENDUM No. 1 DATED SEPTEMBER 23, 2016**

DESIGN OVERSIGHT 07-14-16 SIGN OFF DATE	DESIGN	BY G. Iwamoto	CHECKED G. Yu	LOAD & RESISTANCE FACTOR DESIGN	LIVE LOADING: HL-93
	DETAILS	BY H. Paige	CHECKED G. Yu	LAYOUT BY H. Paige	CHECKED G. Yu
	QUANTITIES	BY G. Iwamoto	CHECKED G. Yu	SPECIFICATIONS BY D. Desai	PLANS AND SPECS COMPARED D. Desai

PREPARED FOR THE STATE OF CALIFORNIA DEPARTMENT OF TRANSPORTATION

Erik Okada
PROJECT ENGINEER

BRIDGE NO. 27E0069
POST MILES 2.63

RETAINING WALL No. 2
PLAN AND ELEVATION

DESIGN GENERAL PLAN SHEET (ENGLISH) (REV. 06-01-09)

ORIGINAL SCALE IN INCHES FOR REDUCED PLANS 0 1 2 3

UNIT: 0746
PROJECT NUMBER & PHASE: 04140005521

DISREGARD PRINTS BEARING EARLIER REVISION DATES

REVISION DATES (PRELIMINARY STAGE ONLY)

SHEET 4 OF 33

FILE => 004-28-0100r-g-rw_1o02.dgn

USERNAME => rhuitt DATE PLOTTED => 9/23/2016 TIME PLOTTED => 9:50:37 AM

DIST	COUNTY	ROUTE	POST MILES TOTAL PROJECT	SHEET No	TOTAL SHEETS
04	CC,Mrn	580	5.0/7.8, 0.0/3.3	511	579

REGISTERED CIVIL ENGINEER 07-14-16 DATE

07-26-16
PLANS APPROVAL DATE

REGISTERED PROFESSIONAL ENGINEER E. OKADA No. S4415 Exp. 6-30-18 STRUCTURAL STATE OF CALIFORNIA

The State of California or its officers or agents shall not be responsible for the accuracy or completeness of scanned copies of this plan sheet.

HNTB CORPORATION
1111 BROADWAY
9TH FLOOR
OAKLAND, CA 94607

BAY AREA TOLL AUTHORITY
375 BEALE STREET, SUITE 800
SAN FRANCISCO, CA 94105

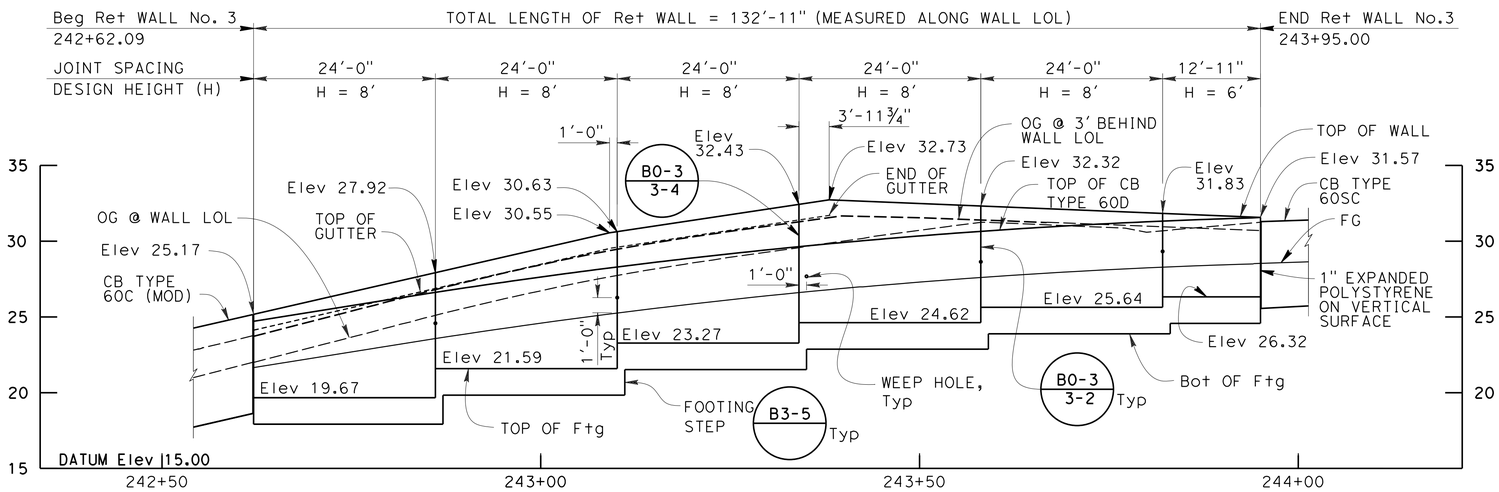

ELEVATION

Horiz. 1"=10'-0"
Vert. 1"=5'-0"

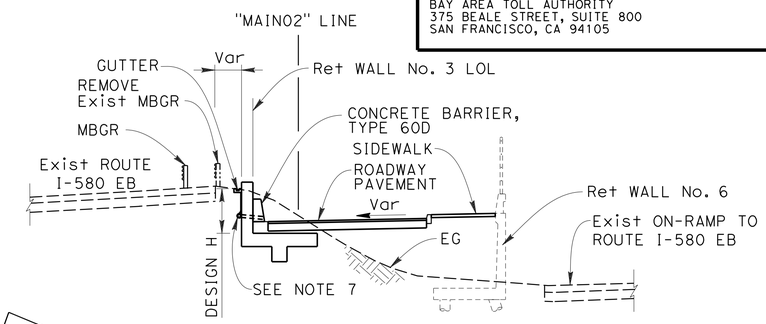

TYPICAL SECTION

NO SCALE

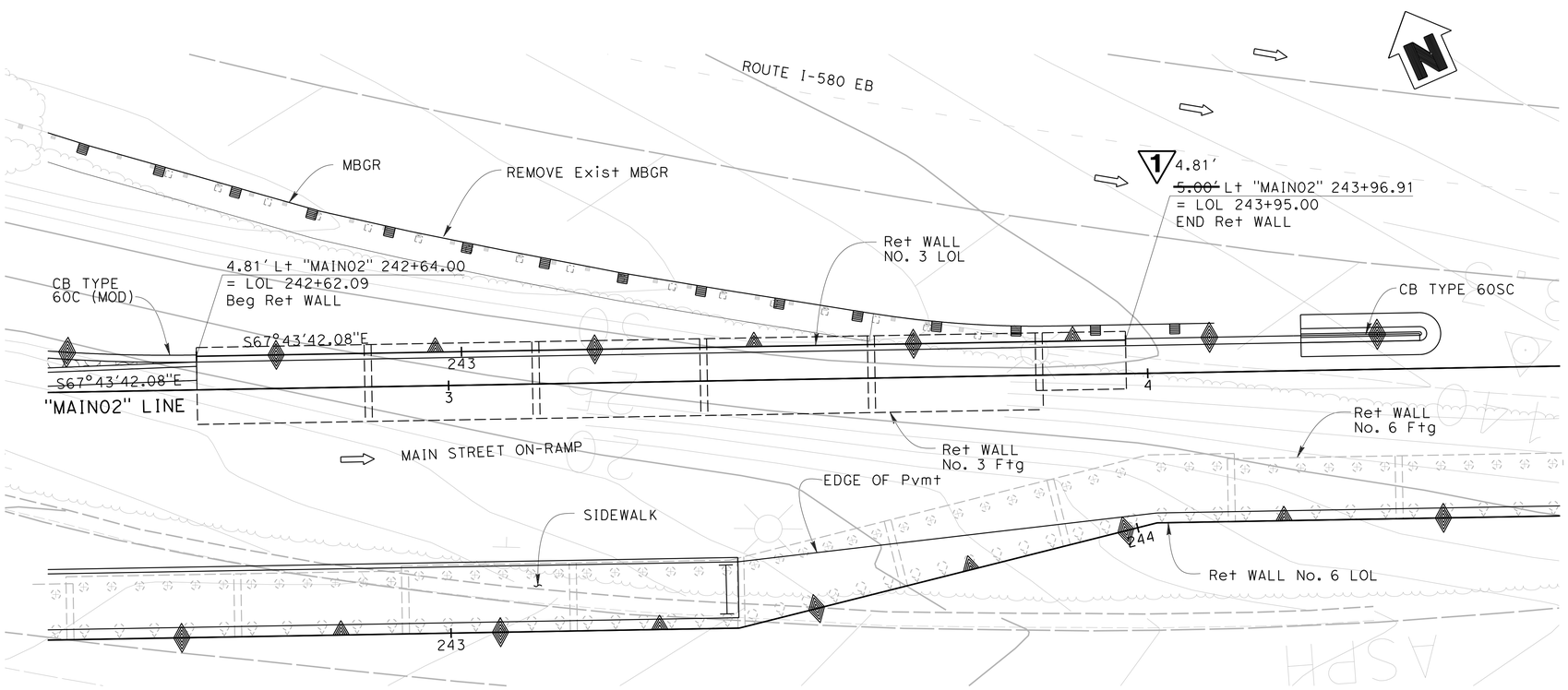

PLAN

1"=10'-0"

NOTES:

1. For roadway information see "ROADWAY PLANS".
2. For utility information see "UTILITY PLANS".
3. For drainage information see "DRAINAGE PLANS".
4. For wall stem joint details see 2010 Standard Plan B0-3.
5. Controlling field conditions to be verified prior to start of construction.
6. For wall details not shown see 2010 Standard Plans B3-5 and B3-6, and sheet "RETAINING WALL - DETAILS".
7. For weephole and wall drain details see sheet "RETAINING WALL - DRAIN DETAILS".
8. For barrier type 60C (MOD) details, see sheet "CONCRETE BARRIER TYPE 60C (MOD)".

LEGEND:

- INDICATES DIRECTION OF TRAFFIC
- CONCRETE RETAINING WALL
- CONCRETE BARRIER
- CONCRETE RETAINING WALL WITH CONCRETE BARRIER

RETAINING WALL NO. 3 QUANTITIES

STRUCTURE EXCAVATION (RETAINING WALL)	305	CY
STRUCTURE BACKFILL (RETAINING WALL)	58	CY
STRUCTURAL CONCRETE (RETAINING WALL)	150	CY
BAR REINFORCING STEEL (RETAINING WALL)	19,924	LB
MINOR CONCRETE (GUTTER)	76	LF
1 ~~GEOCOMPOSITE DRAIN~~	~~91~~	~~SQFT~~
CONCRETE BARRIER (TYPE 60D)	133	LF

1 **REPLACED PER ADDENDUM No. 1 DATED SEPTEMBER 23, 2016**

DESIGN OVERSIGHT 07-14-16 SIGN OFF DATE	DESIGN	BY G. Iwamoto	CHECKED G. Yu	LOAD & RESISTANCE FACTOR DESIGN	LIVE LOADING: HL-93
	DETAILS	BY H. Paige	CHECKED G. Yu	LAYOUT BY H. Paige	CHECKED G. Yu
	QUANTITIES	BY G. Iwamoto	CHECKED G. Yu	SPECIFICATIONS BY D. Desai	PLANS AND SPECS COMPARED D. Desai

PREPARED FOR THE STATE OF CALIFORNIA DEPARTMENT OF TRANSPORTATION

Erik Okada
PROJECT ENGINEER

BRIDGE NO. 27E0070
POST MILES 2.54

RETAINING WALL No. 3
PLAN AND ELEVATION

DESIGN GENERAL PLAN SHEET (ENGLISH) (REV. 06-01-09)

ORIGINAL SCALE IN INCHES FOR REDUCED PLANS 0 1 2 3

UNIT: 0746
PROJECT NUMBER & PHASE: 04140005521

DISREGARD PRINTS BEARING EARLIER REVISION DATES

REVISION DATES (PRELIMINARY STAGE ONLY)

SHEET 5 OF 33

FILE => 005-28-0100r-g-rw_1o03.dgn

USERNAME => huitt DATE PLOTTED => 9/23/2016 TIME PLOTTED => 9:50:39 AM

DIST	COUNTY	ROUTE	POST MILES TOTAL PROJECT	SHEET No	TOTAL SHEETS
04	CC,Mrn	580	5.0/7.8, 0.0/3.3	512	579

REGISTERED CIVIL ENGINEER — DATE 07-14-16

PLANS APPROVAL DATE 07-26-16

REGISTERED PROFESSIONAL ENGINEER — E. OKADA — No. S4415 — Exp. 6-30-18 — STRUCTURAL — STATE OF CALIFORNIA

The State of California or its officers or agents shall not be responsible for the accuracy or completeness of scanned copies of this plan sheet.

HNTB CORPORATION
1111 BROADWAY
9TH FLOOR
OAKLAND, CA 94607

BAY AREA TOLL AUTHORITY
375 BEALE STREET, SUITE 800
SAN FRANCISCO, CA 94105

RETAINING WALL NO. 4 QUANTITIES

STRUCTURE EXCAVATION (TYPE Z-2)	92 ~~813~~	CY
(AERIALLY DEPOSITED LEAD)	1,218	
STRUCTURE EXCAVATION (SOIL NAIL WALL)	~~6,576~~	CY
STRUCTURE BACKFILL (SOIL NAIL WALL)	76	CY
STRUCTURAL SHOTCRETE	146	CY
STRUCTURAL CONCRETE (RETAINING WALL)	450	CY
BAR REINFORCING STEEL (RETAINING WALL)	51,520	LB
SOIL NAIL	22,705	LF
~~SOIL NAIL (TEMPORARY)~~	1 ~~2,750~~	~~LF~~ LS
REMOVE RETAINING WALL	598	CY
MINOR CONCRETE (GUTTER)	527	LF
~~GEOCOMPOSITE DRAIN~~	~~2,650~~	~~SF~~
CABLE RAILING	546	LF
CONCRETE BARRIER (TYPE 60D)	520	LF
ARCHITECTURAL TREATMENT	18,214	SQFT

1 TEMPORARY SHORING (RETAINING WALL NO. 4)

1

1

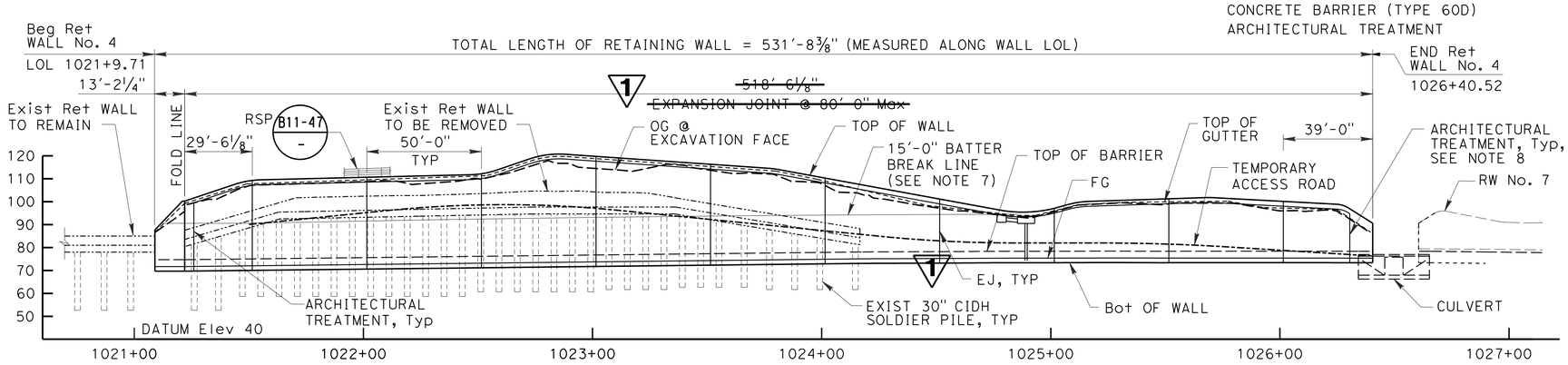

DEVELOPED ELEVATION

1"=30'-0"

LEGEND:

INDICATES DIRECTION OF TRAFFIC

CONCRETE RETAINING WALL

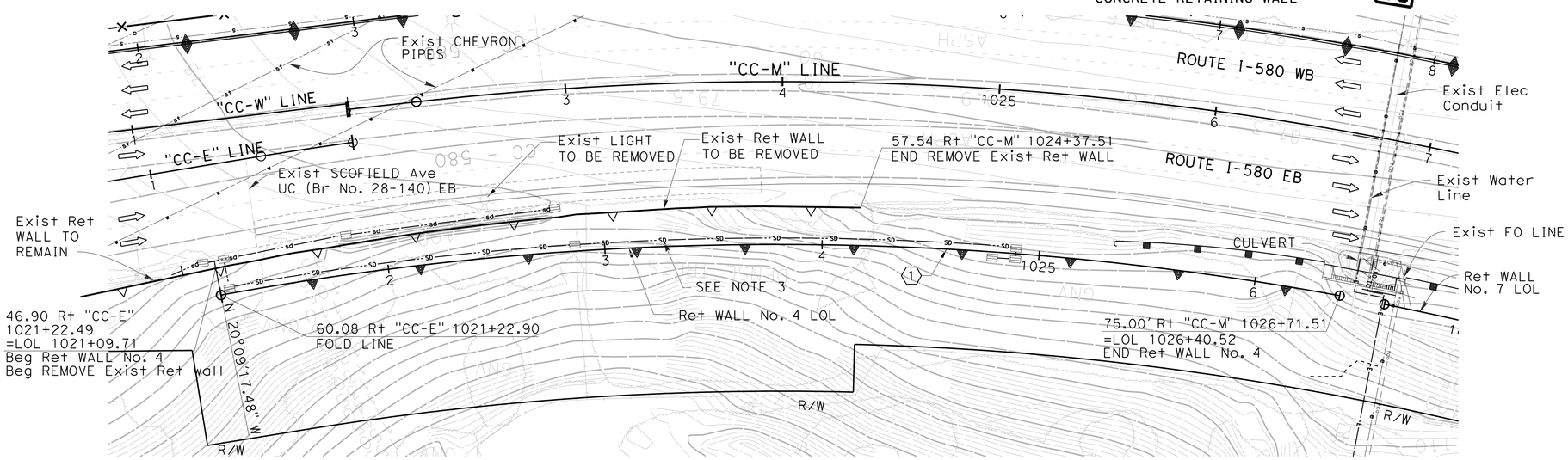

PLAN

1"=30'-0"

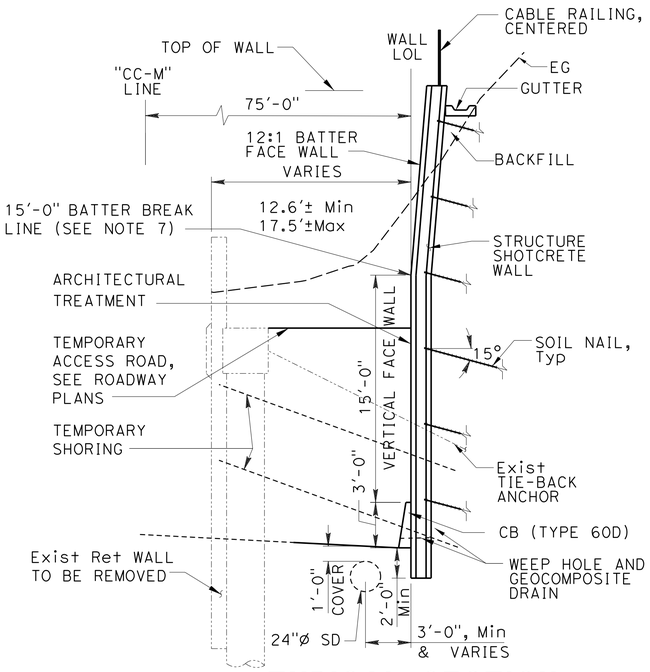

TYPICAL SECTION

NO SCALE

NOTES:

1. For roadway information see "ROADWAY PLANS".
2. For utility information see "UTILITY PLANS".
3. For drainage information see "DRAINAGE PLANS".
4. The contractor shall verify all controlling field dimensions before ordering or fabricating any material.
5. For weephole and wall drain details see sheet "RETAINING WALL NO. 4 - WALL DETAILS 2".
6. Contractor shall install temporary shoring prior to excavating soil behind exist wall.
7. 15'-0" batter break line limits STA 1021+22.90 TO 1024+92.
8. For architectural treatment, see "ARCHITECTURAL PLANS".

1 **REPLACED PER ADDENDUM No. 1 DATED SEPTEMBER 23, 2016**

CURVE DATA

No.	R	Δ	T	L
1	1425.26'	20°48'42"	261.69'	517.61'

DESIGN OVERSIGHT 07-14-16 SIGN OFF DATE	DESIGN	BY G. Yu	CHECKED M. Vargas	LOAD & RESISTANCE FACTOR DESIGN	LIVE LOADING: HL-93
	DETAILS	BY H. Li	CHECKED M. Vargas	LAYOUT BY H. Li	CHECKED M. Vargas
	QUANTITIES	BY M. Vargas	CHECKED G. Yu	SPECIFICATIONS BY D. Desai	PLANS AND SPECS COMPARED M. Vargas

PREPARED FOR THE STATE OF CALIFORNIA DEPARTMENT OF TRANSPORTATION

Erik Okada
PROJECT ENGINEER

BRIDGE NO. 28E0215
POST MILES 5.92

RETAINING WALL No. 4
PLAN AND ELEVATION

DESIGN GENERAL PLAN SHEET (ENGLISH) (REV. 06-01-09)

ORIGINAL SCALE IN INCHES FOR REDUCED PLANS 0 1 2 3

UNIT: 0746
PROJECT NUMBER & PHASE: 04140005521

DISREGARD PRINTS BEARING EARLIER REVISION DATES

REVISION DATES (PRELIMINARY STAGE ONLY)

SHEET 6 OF 33

FILE => 006-28-0100r-g-rw_1o04.dgn

USERNAME => hulit DATE PLOTTED => 9/23/2016 TIME PLOTTED => 9:50:40 AM

DIST	COUNTY	ROUTE	POST MILES TOTAL PROJECT	SHEET No	TOTAL SHEETS
04	CC,Mrn	580	5.0/7.8, 0.0/3.3	514	579

REGISTERED CIVIL ENGINEER 07-14-16 DATE

07-26-16
PLANS APPROVAL DATE

REGISTERED PROFESSIONAL ENGINEER E. OKADA No. S4415 Exp. 6-30-18 STRUCTURAL STATE OF CALIFORNIA

The State of California or its officers or agents shall not be responsible for the accuracy or completeness of scanned copies of this plan sheet.

HNTB CORPORATION
1111 BROADWAY
9TH FLOOR
OAKLAND, CA 94607

BAY AREA TOLL AUTHORITY
375 BEALE STREET, SUITE 800
SAN FRANCISCO, CA 94105

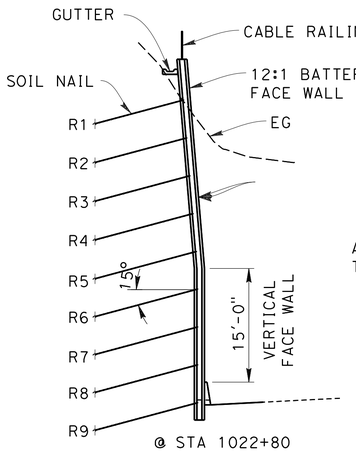

@ STA 1022+80

TYPICAL SECTION

1"=10'-0"

ARCHITECTURAL TREATMENT

SOIL NAIL SCHEDULE

WALL ZONE	ROW	Le	Deg	S	BAR #	Pn	DESCRIPTION
1	R1-R2	30	15	5	9	2.26	SILTY SAND
	R3-R4	25	15	5	9	2.94	MODERATELY WEATHERED SANDSTONE
	R5-R6	20	15	5	9	2.94	MODERATELY WEATHERED SANDSTONE
2	R1-R3	40	15	5	9	2.26	SILTY SAND
	R4-R6	30	15	5	9	2.94	MODERATELY WEATHERED SANDSTONE
	R7-R8	25	15	5	9	2.94	MODERATELY WEATHERED SANDSTONE
3	R1-R4	45	15	5	9	2.26	SILTY SAND
	R5-R7	35	15	5	9	2.94	MODERATELY WEATHERED SANDSTONE
	R8-R9	25	15	5	9	2.94	MODERATELY WEATHERED SANDSTONE
4	R1-R2	30	15	5	9	2.26	SILTY SAND
	R3-R4	25	15	5	9	2.94	MODERATELY WEATHERED SANDSTONE
	R5-R6	20	15	5	9	2.94	MODERATELY WEATHERED SANDSTONE
5	R1-R2	40	15	5	9	3.02	SILTY SAND
	R3-R5	30	15	5	9	3.02	SILTY SAND

LEGEND:

- INDICATES EXIST TIE-BACK ANCHOR
- + INDICATES PRODUCTION NAIL
- ⊕ INDICATES TEST NAIL
- INDICATES EXIST STRUCTURE
- INDICATES NAIL ROW DESIGNATION LINE
- Le: EMBEDMENT LENGTH (Ft)
- Deg°: NAIL DECLINATION (Deg)
- S: HORIZONTAL SPACING (Ft)
- BAR#: MINIMUM SOIL NAIL BAR SIZE
- Pn: NOMINAL PULLOUT RESISTANCE (KLF)

NOTES:

1. For expansion joint locations, see "PLAN AND ELEVATION".
2. Expansion joint in CIP concrete facing only.
3. For Down Drain Details see "DRAIN DETAILS NO. 2" sheet.

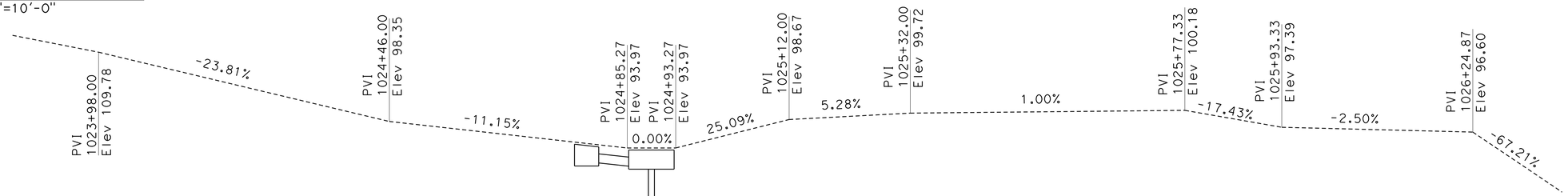

GUTTER PROFILE 1

1"=10'-0"

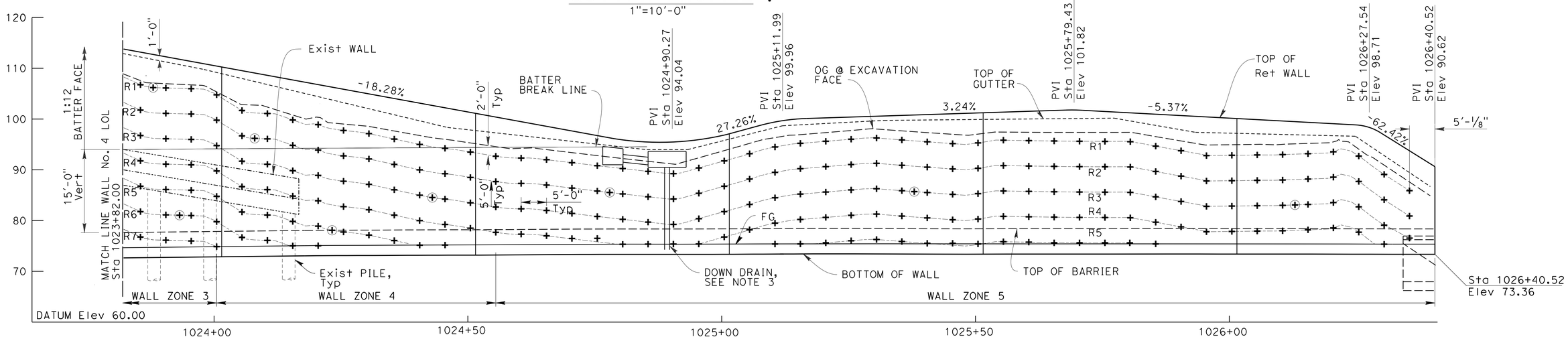

MIRRORED WALL ELEVATION

1"=10'-0"

1 REPLACED PER ADDENDUM No. 1 DATED SEPTEMBER 23, 2016

DESIGN	BY G. Yu	CHECKED M. Vargas	
DETAILS	BY H. Paige	CHECKED M. Vargas	
QUANTITIES	BY M. Vargas	CHECKED G. Yu	

DESIGN OVERSIGHT
07-14-16
SIGN OFF DATE

PREPARED FOR THE STATE OF CALIFORNIA DEPARTMENT OF TRANSPORTATION

Erik Okada
PROJECT ENGINEER

BRIDGE NO. 28E0215
POST MILES 5.92

RETAINING WALL No. 4
SOIL NAIL LAYOUT 2

DESIGN DETAIL SHEET (ENGLISH) (REV. 03/14/12)

ORIGINAL SCALE IN INCHES FOR REDUCED PLANS 0 1 2 3

UNIT: 0746
PROJECT NUMBER & PHASE: 04140005521 CONTRACT NO.: 04-2J6804

DISREGARD PRINTS BEARING EARLIER REVISION DATES

REVISION DATES

SHEET 8 OF 33

FILE => 008-28-0100r-g-rwdt02.dgn

USERNAME => $USER$ DATE PLOTTED => $DATE$ TIME PLOTTED => $TIME$

DIST	COUNTY	ROUTE	POST MILES TOTAL PROJECT	SHEET No	TOTAL SHEETS
04	CC,Mrn	580	5.0/7.8, 0.0/3.3	518	579

07-14-16
REGISTERED CIVIL ENGINEER DATE

07-26-16
PLANS APPROVAL DATE

REGISTERED PROFESSIONAL ENGINEER E. OKADA No. S4415 Exp. 6-30-18 STRUCTURAL STATE OF CALIFORNIA

The State of California or its officers or agents shall not be responsible for the accuracy or completeness of scanned copies of this plan sheet.

HNTB CORPORATION
1111 BROADWAY
9TH FLOOR
OAKLAND, CA 94607

BAY AREA TOLL AUTHORITY
375 BEALE STREET, SUITE 800
SAN FRANCISCO, CA 94105

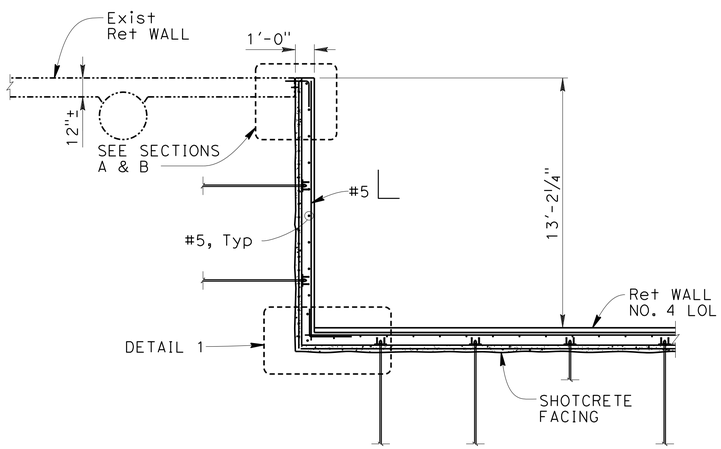

PLAN
NO SCALE

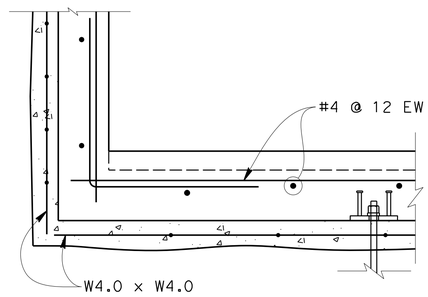

DETAIL 1
NO SCALE

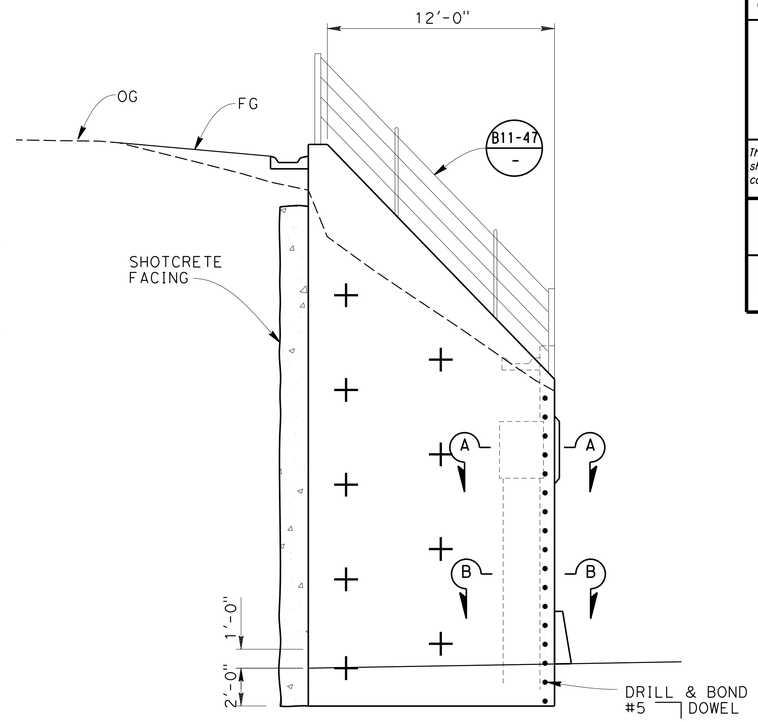

RETURN WALL ELEVATION
NO SCALE

LEGEND:

STRUCTURE BACKFILL

STRUCTURE EXCAVATION

STRUCTURE EXCAVATION 2' ADL (TYPE Z-2)

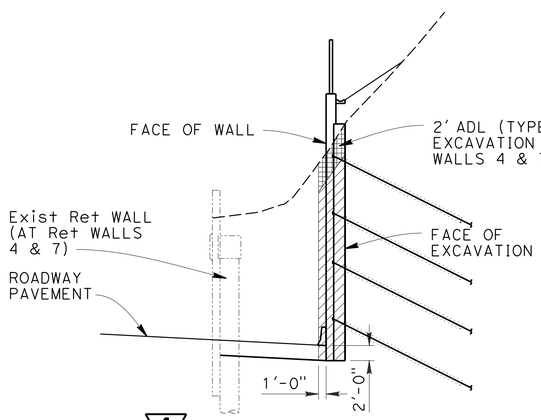

1 **EXCAVATION**

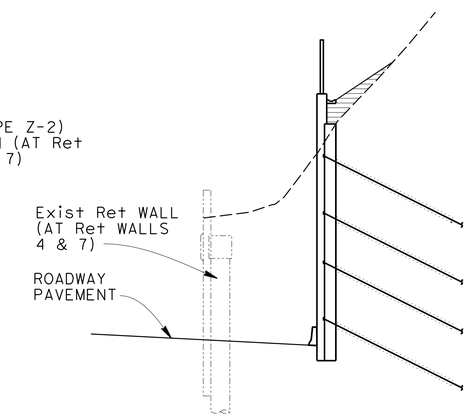

1 **BACKFILL**

(RETAINING WALLS 4, 5 AND 7)
OF
LIMITS ~~FOR~~ PAYMENT
NO SCALE

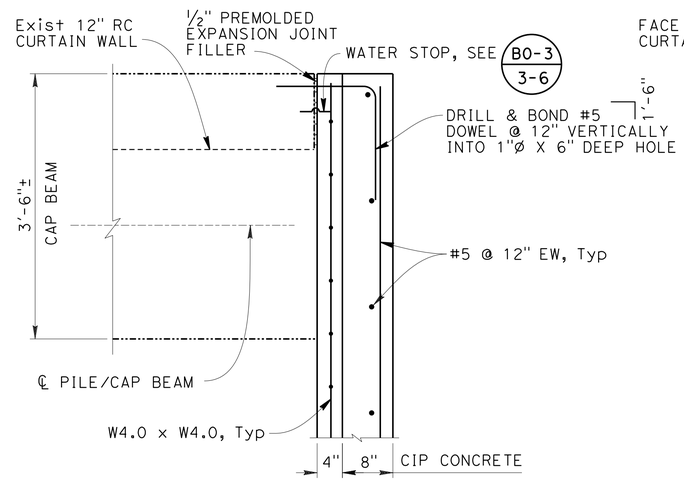

SECTION A-A
NO SCALE

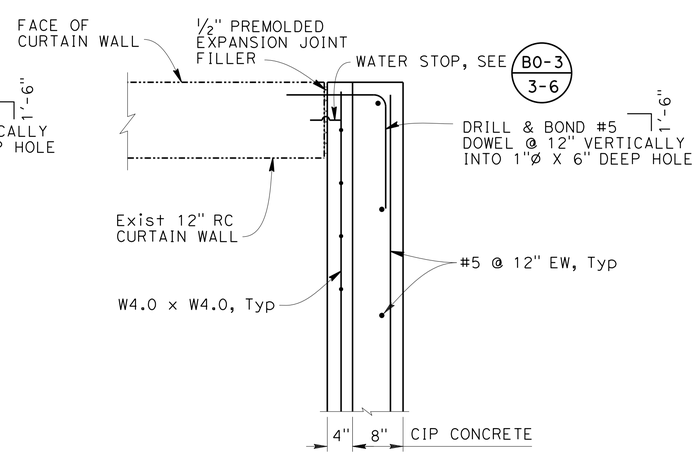

SECTION B-B
NO SCALE

1 **REPLACED PER ADDENDUM No. 1 DATED SEPTEMBER 23, 2016**

DESIGN OVERSIGHT
07-14-16
SIGN OFF DATE

	BY	CHECKED
DESIGN	M. Vargas	G. Yu
DETAILS	H. Li	M. Vargas
QUANTITIES	M. Vargas	G. Yu

PREPARED FOR THE
STATE OF CALIFORNIA
DEPARTMENT OF TRANSPORTATION

Erik Okada
PROJECT ENGINEER

BRIDGE NO. 28E0215
POST MILES 5.92

RETAINING WALL No. 4
WALL DETAILS

DESIGN DETAIL SHEET (ENGLISH) (REV. 03/14/12)

ORIGINAL SCALE IN INCHES FOR REDUCED PLANS 0 1 2 3

UNIT: 0746
PROJECT NUMBER & PHASE: 04140005521 CONTRACT NO.: 04-2J6804

DISREGARD PRINTS BEARING EARLIER REVISION DATES

REVISION DATES

SHEET 12 OF 33

FILE => 012-28-0100r-g-rwdt06.dgn

USERNAME => hu111 DATE PLOTTED => 9/23/2016 TIME PLOTTED => 9:50:42 AM

DIST	COUNTY	ROUTE	POST MILES TOTAL PROJECT	SHEET No	TOTAL SHEETS
04	CC,Mrn	580	5.0/7.8, 0.0/3.3	519	579

REGISTERED CIVIL ENGINEER 07-14-16 DATE

07-26-16
PLANS APPROVAL DATE

The State of California or its officers or agents shall not be responsible for the accuracy or completeness of scanned copies of this plan sheet.

REGISTERED PROFESSIONAL ENGINEER E. OKADA No. S4415 Exp. 6-30-18 STRUCTURAL STATE OF CALIFORNIA

HNTB CORPORATION
1111 BROADWAY
9TH FLOOR
OAKLAND, CA 94607

BAY AREA TOLL AUTHORITY
375 BEALE STREET, SUITE 800
SAN FRANCISCO, CA 94105

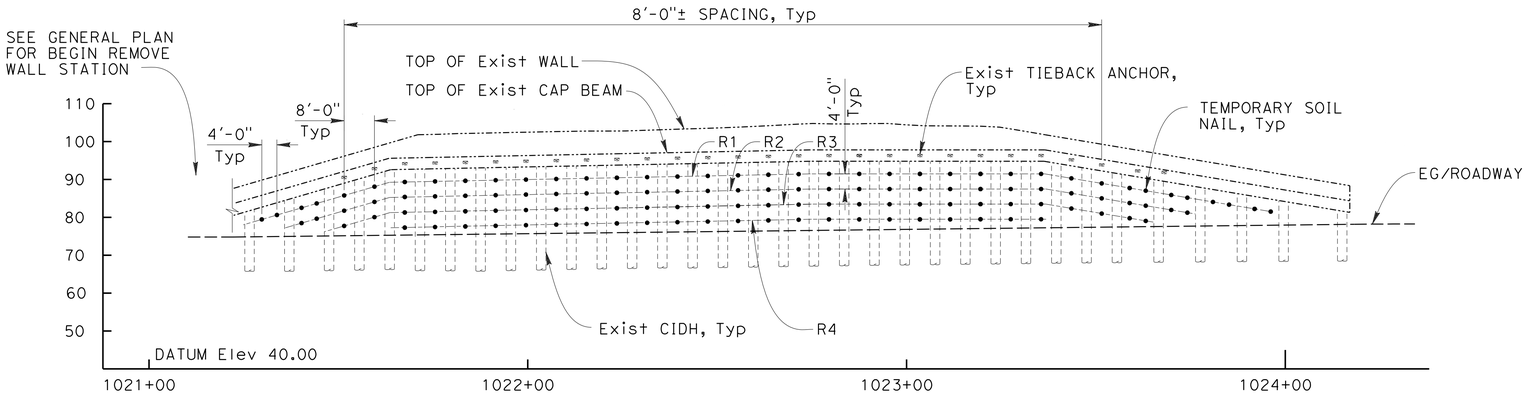

SUGGESTED TEMPORARY SOIL NAIL LAYOUT (MIRRORED)

1"=20'-0"

EXISTING WALL INFORMATION:

1. The maximum cantilevered wall height without support when tiebacks are cut is 8'-0".
2. The maximum allowed construction surcharge q = 500 psf. Higher loads may be used as long as the contractor determines that a higher load will not compromise the wall's stability and safety of the operation.
3. Maximum force per tieback:
   Tmax: ±90 kips (ROW A)
   Tmax: ±76 kips (ROW B
4. The punching shear and flexural capacity of the wall are:
   V = 70 kips, M = 15 kip-ft.

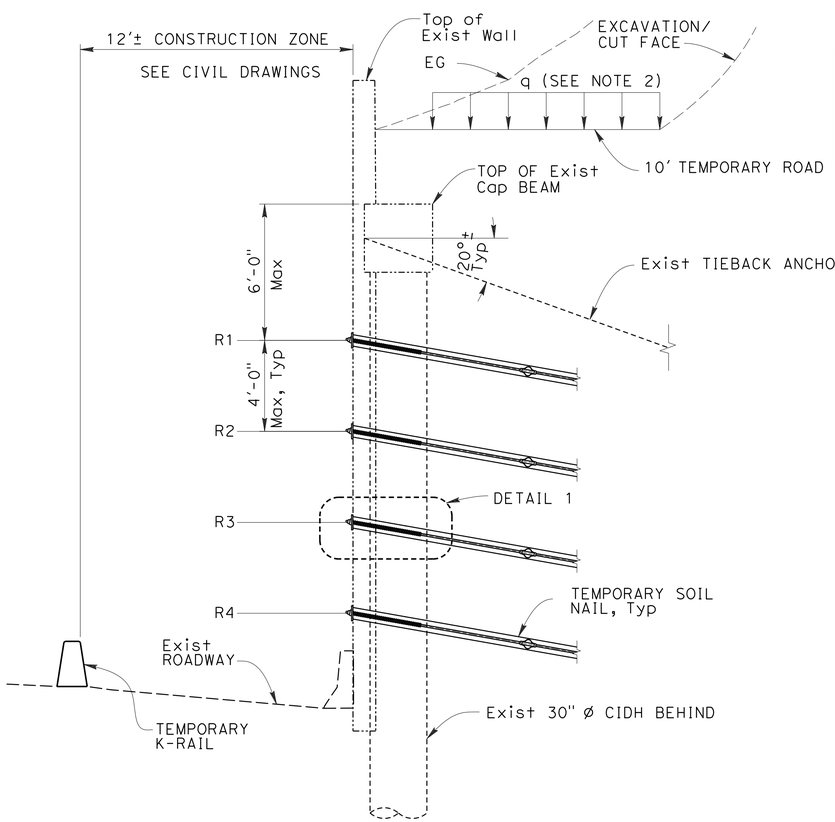

SUGGESTED TYPICAL SECTION

3/8"=1'-0"

SOIL PROPERTIES

STATION LIMIT	DEPTH* (ft)	UNIT WEIGHT (pcf)	FRICTION ANGLE	COHESION (psf)	ULTIMATE BOND STRENGTH, q_u (psi)	SOIL TYPE
"CC-E" LINE Sta 1021+22 TO "CC-E" LINE Sta 1024+50	0-20	130	36	150	10	SILTY SAND
	20-40	130	40	300	13	MODERATELY WEATHERED SANDSTONE

* Note: The depth is the distance from the top of the wall.

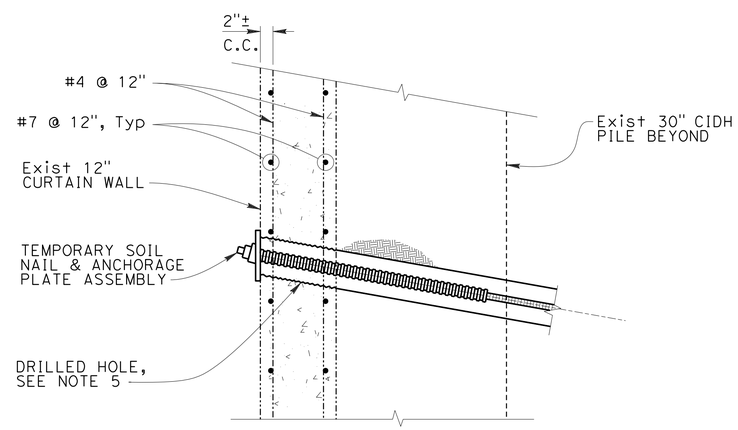

DETAIL 1

1/2"=1'-0"

TEMPORARY SUPPORT CONSTRUCTION NOTES:

1. The existing tie back anchor wall cannot self-support when the tie-backs are removed.
2. A temporary support system shall be installed prior to initiating excavation and construction of the soil nail retaining wall.
3. The details shown on this drawing including temporary nail spacing and nail locations are shown for illustration only. The contractor is ~~allowed to develop their own temporary wall support system.~~ 1 responsible for the design of the temporary soil nails.
4. ~~During wall construction, the contractor shall be responsible for monitoring and maintaining the existing wall stability during construction.~~ 1
   During wall demolition and construction of the new wall, the existing wall's lateral deflection is not to exceed 0.004H. H is defined as the height of the wall from the existing finished grade to the top of the existing cap beam or relative top of wall as wall demolition proceeds. The contractor must monitor and ensure this deflection is not exceeded.
5. If attachment or drilling to existing wall is required, the contractor shall verify location of curtain Wall reinforcement and location of existing CIDH solider piles and tie-back anchors.
6. For limits of construction envelope in front of the wall, see civil drawings.
7. 1 Difficulty in drilling and excavation may be encountered due to the potential encountering of grout from the existing tieback anchors and the temporary soil nails.

LEGEND:

- • INDICATES TEMPORARY SOIL NAIL
- INDICATES EXIST TIE BACK ANCHOR

1 REPLACED PER ADDENDUM No. 1 DATED SEPTEMBER 23, 2016

DESIGN OVERSIGHT 07-14-16 SIGN OFF DATE	DESIGN	BY M. Vargas	CHECKED G. Yu	PREPARED FOR THE STATE OF CALIFORNIA DEPARTMENT OF TRANSPORTATION	Erik Okada PROJECT ENGINEER
	DETAILS	BY H. Li	CHECKED M. Vargas		
	QUANTITIES	BY M. Vargas	CHECKED G. Yu		

BRIDGE NO. 28E0215
POST MILES 5.92

RETAINING WALL No. 4
TEMPORARY SHORING

DESIGN DETAIL SHEET (ENGLISH) (REV. 03/14/12)

ORIGINAL SCALE IN INCHES FOR REDUCED PLANS 0 1 2 3

UNIT: 0746
PROJECT NUMBER & PHASE: 04140005521 CONTRACT NO.: 04-2J6804

DISREGARD PRINTS BEARING EARLIER REVISION DATES

REVISION DATES

SHEET 13 OF 33

FILE => 013-28-0100r-g-rwdt07.dgn

USERNAME => hu111 DATE PLOTTED => 9/23/2016 TIME PLOTTED => 9:50:43 AM

DIST	COUNTY	ROUTE	POST MILES TOTAL PROJECT	SHEET No	TOTAL SHEETS
04	CC,Mrn	580	5.0/7.8, 0.0/3.3	520	579

REGISTERED CIVIL ENGINEER — DATE 07-14-16

PLANS APPROVAL DATE 07-26-16

REGISTERED PROFESSIONAL ENGINEER — E. OKADA — No. S4415 — Exp. 6-30-18 — STRUCTURAL — STATE OF CALIFORNIA

The State of California or its officers or agents shall not be responsible for the accuracy or completeness of scanned copies of this plan sheet.

HNTB CORPORATION
1111 BROADWAY
9TH FLOOR
OAKLAND, CA 94607

BAY AREA TOLL AUTHORITY
375 BEALE STREET, SUITE 800
SAN FRANCISCO, CA 94105

RETAINING WALL NO. 5 QUANTITIES

STRUCTURE EXCAVATION (SOIL NAIL WALL)	~~168~~ 327	CY
STRUCTURE BACKFILL (SOIL NAIL WALL)	75	CY
STRUCTURAL SHOTCRETE	59	CY
STRUCTURAL CONCRETE (RETAINING WALL)	189	CY
BAR REINFORCING STEEL (RETAINING WALL)	25,415	LB
MINOR CONCRETE (GUTTER)	502	LF
~~GEOCOMPOSITE DRAIN~~	~~641~~	~~SQFT~~
CABLE RAILING	509	LF
SOIL NAIL	2,929	LF
ARCHITECTURAL TREATMENT	6,686	SQFT

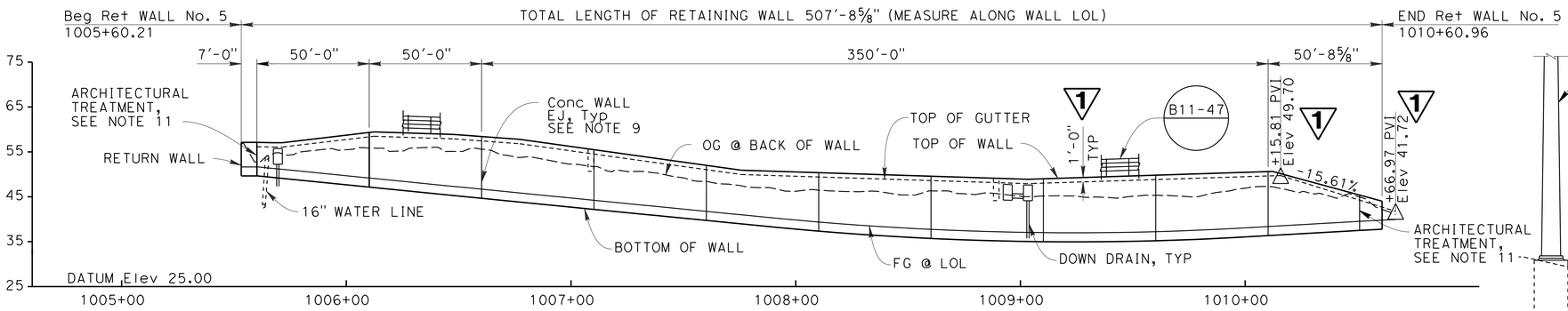

DEVELOPED ELEVATION

Horiz. 1"=30'-0"
Vert. 1"=15'-0"

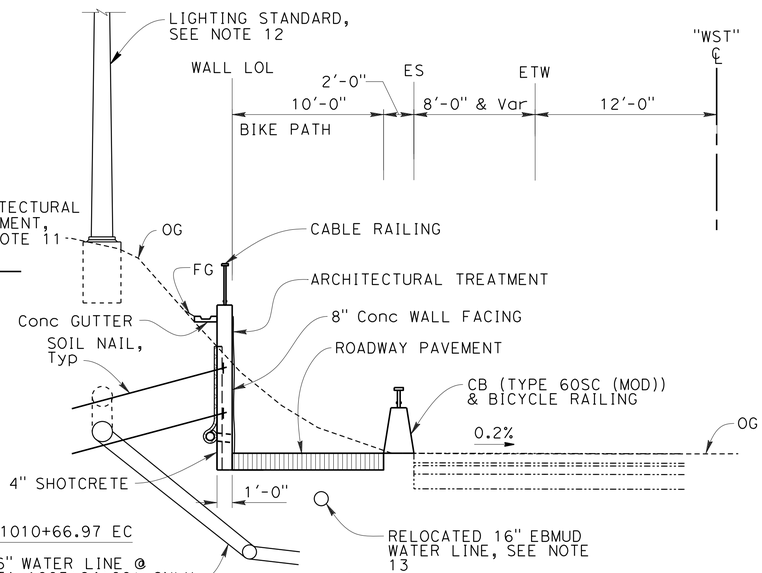

TYPICAL SECTION

NO SCALE

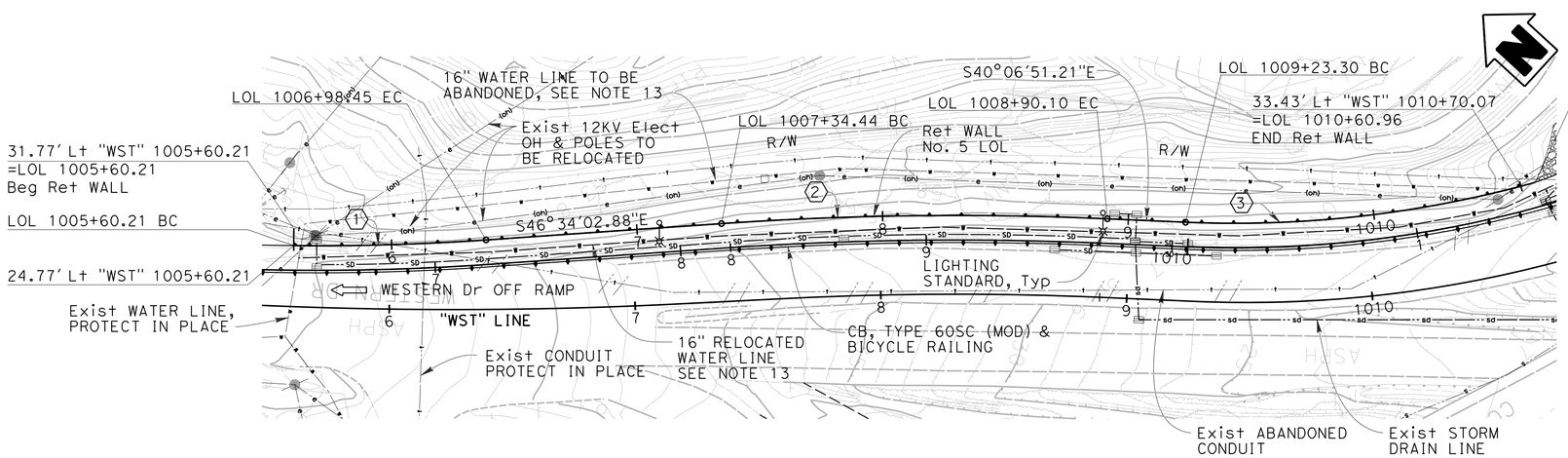

PLAN

1"=30'-0"

CURVE DATA				
No.	R	Δ	T	L
1	990.00'	4°34'18"	39.52'	78.99'
2	1382.0'	6°27'07"	77.90'	155.63'
3	458.00'	16°35'27"	66.78'	132.62'

LEGEND:

INDICATES DIRECTION OF TRAFFIC

CONCRETE RETAINING WALL

CONCRETE BARRIER

NOTES:

1. For roadway information see "ROADWAY PLANS".
2. For utility information see "UTILITY PLANS".
3. For drainage information see "DRAINAGE PLANS".
4. For concrete wall facing joint details see 2010 STANDARD PLAN BO-3.
5. Controlling field conditions to be verified prior to begin of construction work.
6. For wall details not shown see 2010 STANDARD PLANS B3-5 and B3-6, and sheet "SOIL NAIL DETAILS 1 and 2".
7. For wall drain details, See "WALL DRAIN DETAILS".
8. For Cable Railing see 2010 STANDARD PLAN B11-47.
9. Expansion joint in CIP concrete fascia only.
10. Install and test 2 verification nails per wall zone before starting excavation.
11. For architectural treatment, see "ARCHITECTURAL PLANS".
12. For lighting standard location and details, see "LIGHTING AND SIGN ILLUMINATION".
13. Contractor shall coordinate construction with EBMUD's relocation of 16" water line. See EBMUD's construction plan for alignment and details.
14. For limits excavation and backfill, see sheet "RETAINING WALL NO. 4 - WALL DETAILS".

1 REPLACED PER ADDENDUM No. 1 DATED SEPTEMBER 23, 2016

DESIGN OVERSIGHT 07-14-16 SIGN OFF DATE	DESIGN	BY G. Yu	CHECKED M. Vargas	LOAD & RESISTANCE FACTOR DESIGN	LIVE LOADING: HL-93
	DETAILS	BY H. Paige	CHECKED G. Yu	LAYOUT BY H. Paige	CHECKED G. Yu
	QUANTITIES	BY G. Yu	CHECKED M. Vargas	SPECIFICATIONS BY D. Desai	PLANS AND SPECS COMPARED D. Desai

PREPARED FOR THE STATE OF CALIFORNIA DEPARTMENT OF TRANSPORTATION

Erik Okada — PROJECT ENGINEER

BRIDGE NO. 28E0216 — POST MILES 6.00

RETAINING WALL No. 5
PLAN AND ELEVATION

DESIGN GENERAL PLAN SHEET (ENGLISH) (REV. 06-01-09)

ORIGINAL SCALE IN INCHES FOR REDUCED PLANS 0 1 2 3

UNIT: 0746
PROJECT NUMBER & PHASE: 04140005521

DISREGARD PRINTS BEARING EARLIER REVISION DATES

REVISION DATES (PRELIMINARY STAGE ONLY)

SHEET 14 OF 33

FILE => 014-28-01001-g-rw_1o05.dgn

USERNAME => pu111 DATE PLOTTED => 9/23/2016 TIME PLOTTED => 9:50:45 AM

DIST	COUNTY	ROUTE	POST MILES TOTAL PROJECT	SHEET No	TOTAL SHEETS
04	CC,Mrn	580	5.0/7.8, 0.0/3.3	526	579

REGISTERED CIVIL ENGINEER 07-14-16 DATE

07-26-16
PLANS APPROVAL DATE

REGISTERED PROFESSIONAL ENGINEER E. OKADA No. S4415 Exp. 6-30-18 STRUCTURAL STATE OF CALIFORNIA

The State of California or its officers or agents shall not be responsible for the accuracy or completeness of scanned copies of this plan sheet.

HNTB CORPORATION
1111 BROADWAY
9TH FLOOR
OAKLAND, CA 94607

BAY AREA TOLL AUTHORITY
375 BEALE STREET, SUITE 800
SAN FRANCISCO, CA 94105

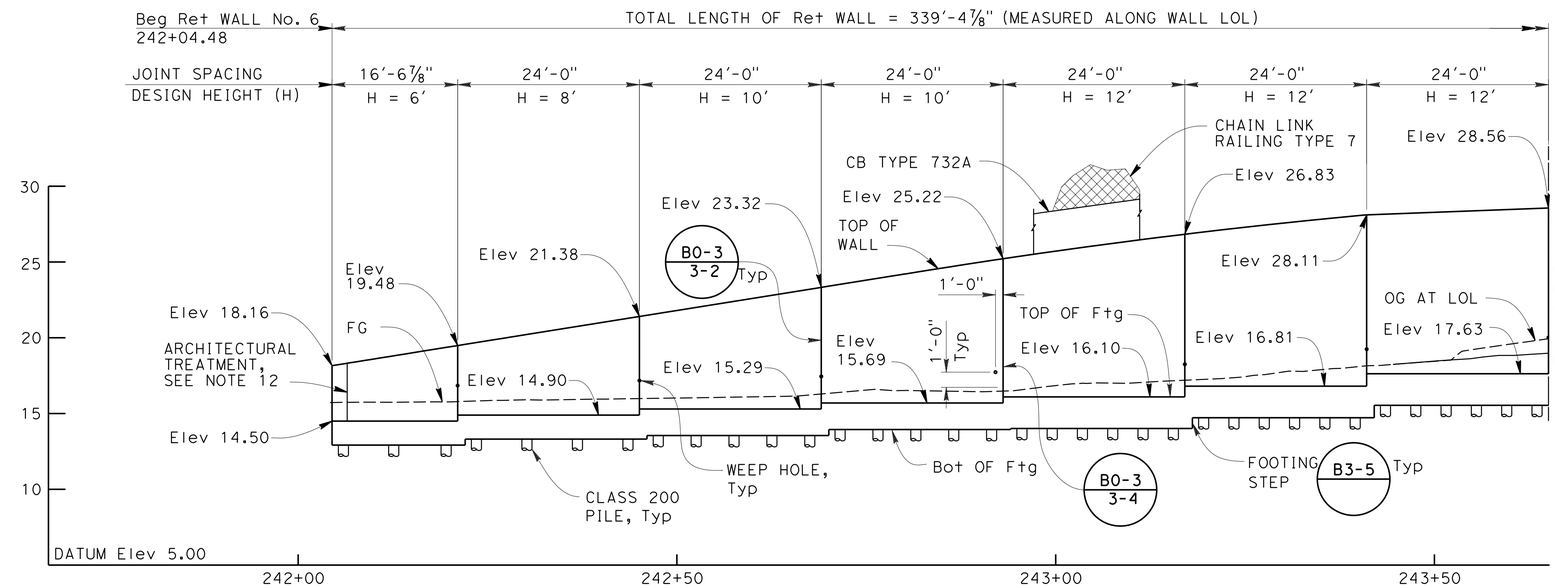

DEVELOPED ELEVATION

Horiz. 1"=10'-0"
Vert. 1"=5'-0"

LEGEND:

- INDICATES DIRECTION OF TRAFFIC
- CONCRETE RETAINING WALL
- CONCRETE BARRIER
- CONCRETE RETAINING WALL WITH CONCRETE BARRIER
- CHAIN LINK FENCE
- INDICATES PILE
- INDICATES BATTERED PILE

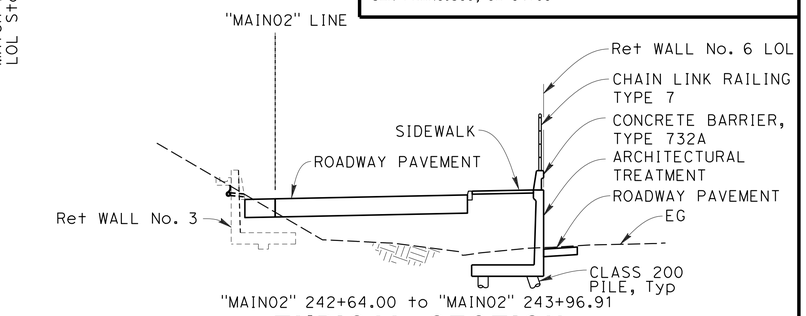

TYPICAL SECTION

NO SCALE

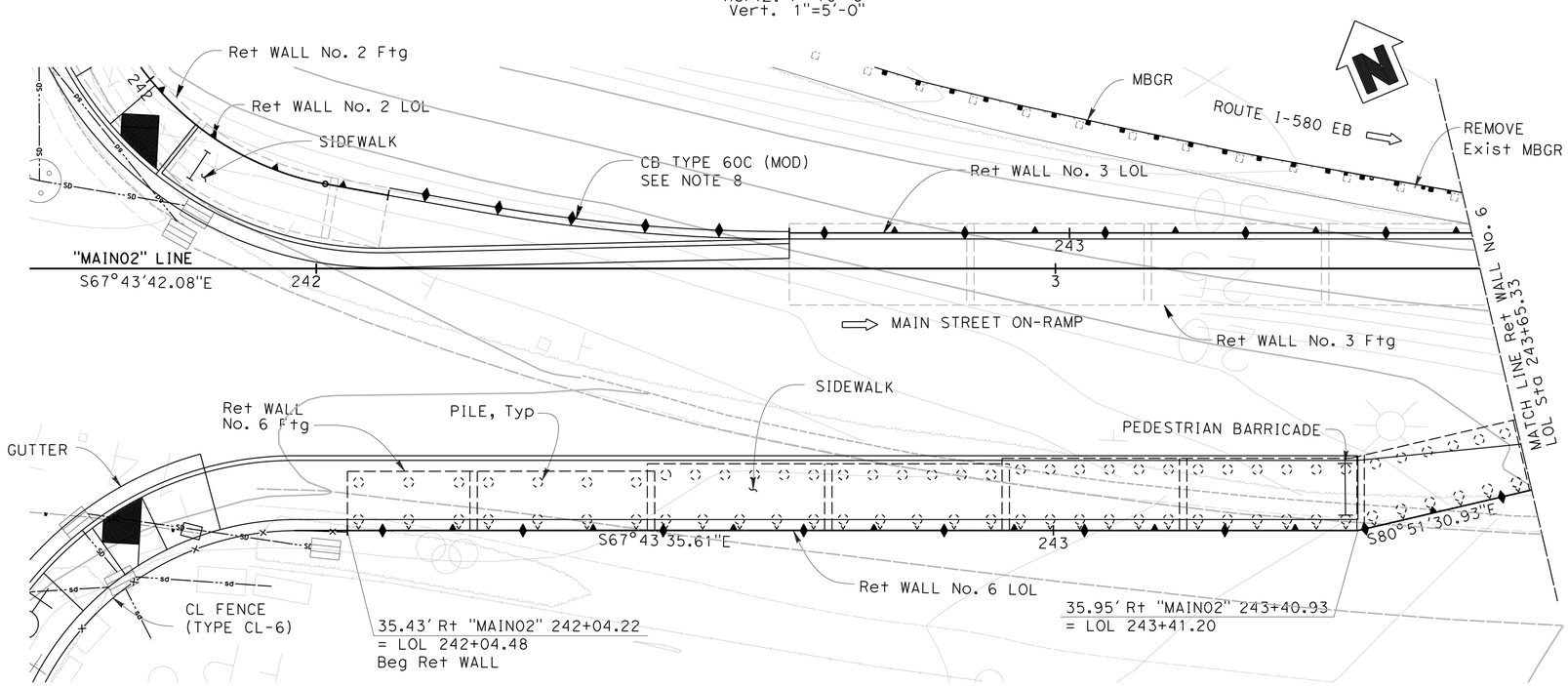

PLAN

1"=10'-0"

NOTES:

1. For roadway information see "ROADWAY PLANS".
2. For utility information see "UTILITY PLANS".
3. For drainage information see "DRAINAGE PLANS".
4. For wall stem joint details see 2010 Standard Plan B0-3.
5. Controlling field conditions to be verified prior to start of construction.
6. For wall and pile details not shown see 2010 Standard Plans B3-5, and sheet "RETAINING WALL NO. 6 -DETAILS".
7. For weephole and wall drain details see sheet "RETAINING WALL - DRAIN DETAILS".
8. For barrier type 60C (MOD) details, see sheet "CONCRETE BARRIER TYPE 60C (MOD)".
9. For barrier type 732A details, see 2010 Standard Plan RSP B11-55.
10. For chain link railing type 7 details, see 2010 Standard Plan B11-52.
11. For staging information, see "STAGE CONSTRUCTION PLANS".
12. For architectural treatment, see "ARCHITECTURAL PLANS".

RETAINING WALL NO. 6 QUANTITIES

STRUCTURE EXCAVATION (TYPE Z-2) (AERIALLY DEPOSITED LEAD)	274	CY
STRUCTURE EXCAVATION (RETAINING WALL)	256	CY
STRUCTURE BACKFILL (RETAINING WALL)	975	CY
STRUCTURAL CONCRETE (RETAINING WALL)	305	CY
BAR REINFORCING STEEL (RETAINING WALL)	53,454	LB
1 ~~GEOCOMPOSITE DRAIN~~	~~1230~~	~~SQFT~~
CHAIN LINK RAILING (TYPE 7)	340	LF
CONCRETE BARRIER (TYPE 732A)	340	LF
FURNISH PILING (CLASS 200) (ALTERNATIVE W)	5127	LF
DRIVE PILE (CLASS 200) (ALTERNATIVE W)	146	EA
ARCHITECTURAL TREATMENT	2031	SQFT

1 REPLACED PER ADDENDUM No. 1 DATED SEPTEMBER 23, 2016

DESIGN OVERSIGHT 07-14-16 SIGN OFF DATE	DESIGN	BY G. Iwamoto	CHECKED M. Vargas	LOAD & RESISTANCE FACTOR DESIGN	LIVE LOADING: HL-93
	DETAILS	BY H. Li	CHECKED M. Vargas	LAYOUT BY H. Li	CHECKED G. Yu
	QUANTITIES	BY G. Iwamoto	CHECKED E. Okada	SPECIFICATIONS BY D. Desai	PLANS AND SPECS COMPARED D. Desai

PREPARED FOR THE STATE OF CALIFORNIA DEPARTMENT OF TRANSPORTATION

Erik Okada
PROJECT ENGINEER

BRIDGE NO. 27E0071
POST MILES 2.54

RETAINING WALL No. 6
PLAN AND ELEVATION NO. 1

DESIGN GENERAL PLAN SHEET (ENGLISH) (REV. 06-01-09)

ORIGINAL SCALE IN INCHES FOR REDUCED PLANS 0 1 2 3

UNIT: 0746
PROJECT NUMBER & PHASE: 04140005521

DISREGARD PRINTS BEARING EARLIER REVISION DATES

REVISION DATES (PRELIMINARY STAGE ONLY)

SHEET 20 OF 33

FILE => 020-28-0100r-g-rw_1o06.dgn

USERNAME => pu111 DATE PLOTTED => 9/23/2016 TIME PLOTTED => 9:50:47 AM

DIST	COUNTY	ROUTE	POST MILES TOTAL PROJECT	SHEET No	TOTAL SHEETS
04	CC,Mrn	580	5.0/7.8, 0.0/3.3	530	579

REGISTERED CIVIL ENGINEER — DATE 07-14-16

PLANS APPROVAL DATE 07-26-16

REGISTERED PROFESSIONAL ENGINEER — E. OKADA — No. S4415 — Exp. 6-30-18 — STRUCTURAL — STATE OF CALIFORNIA

The State of California or its officers or agents shall not be responsible for the accuracy or completeness of scanned copies of this plan sheet.

HNTB CORPORATION
1111 BROADWAY
9TH FLOOR
OAKLAND, CA 94607

BAY AREA TOLL AUTHORITY
375 BEALE STREET, SUITE 800
SAN FRANCISCO, CA 94105

RETAINING WALL NO. 7 QUANTITIES

STRUCTURE EXCAVATION (TYPE Z-2) (AERIALLY DEPOSITED LEAD)	22 ~~191~~	CY	
STRUCTURE EXCAVATION (SOIL NAIL WALL)	193 ~~451~~	CY	
STRUCTURE BACKFILL (RETAINING WALL)	9	CY	
STRUCTURAL SHOTCRETE	29	CY	
STRUCTURAL CONCRETE (RETAINING WALL)	87	CY	
BAR REINFORCING STEEL (RETAINING WALL)	11,563	LB	
SOIL NAIL	2,665	LF	
~~SOIL NAIL TEMPORARY~~ TEMPORARY SHORING (RETAINING WALL NO.7)	~~1,015~~	~~LF~~ 1	LS
REMOVE RETAINING WALL	133	CY	
REMOVE STEEL PILES	132	LF	
MINOR CONCRETE (GUTTER)	128	LF	
~~GEOCOMPOSITE DRAIN~~	~~600~~	~~SF~~	
CABLE RAILING	127	LF	
CONCRETE BARRIER (TYPE 60D)	125	LF	
ARCHITECTURAL TREATMENT	2,560	SQFT	

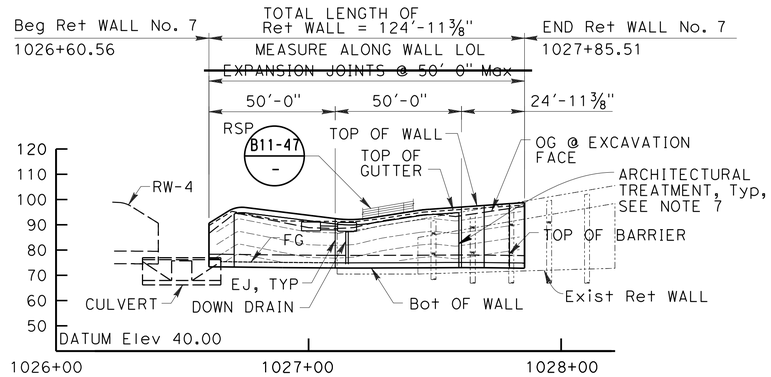

MIRRORED ELEVATION

1"=30'-0"

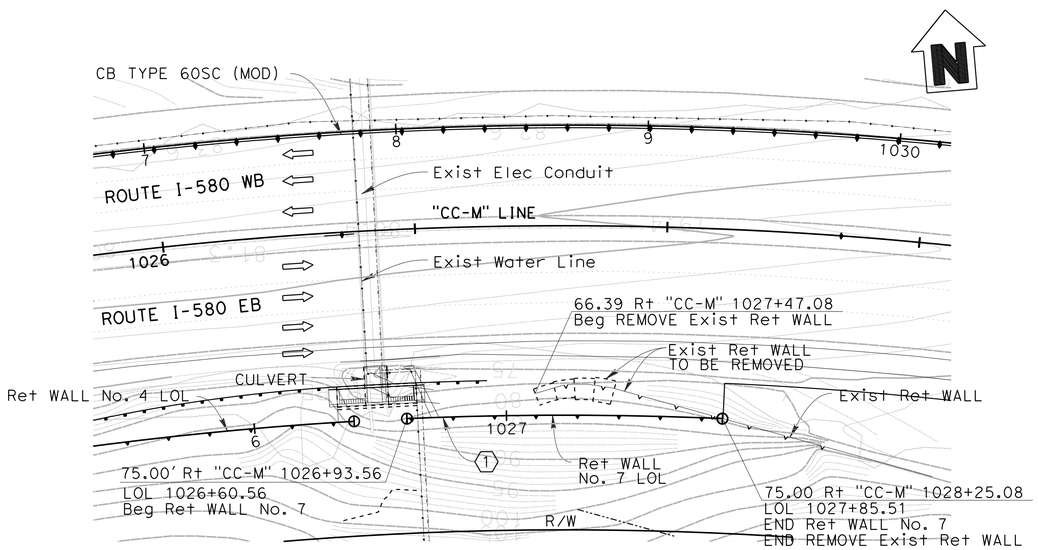

PLAN

1"=30'-0"

CURVE DATA				
No.	R	Δ	T	L
1	1425'	5°01'25"	62.51'	124.95'

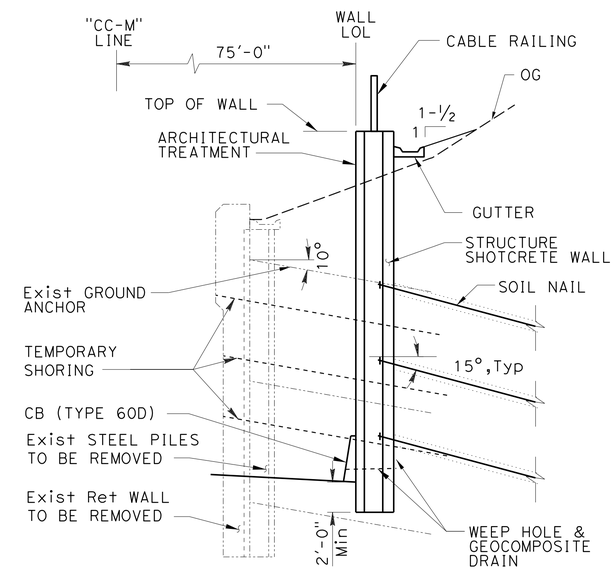

TYPICAL SECTION

NO SCALE

LEGEND:

- ⇨ INDICATES DIRECTION OF TRAFFIC
- ▲ CONCRETE RETAINING WALL
- ♦ CONCRETE BARRIER

NOTES:

1. For roadway information see "ROADWAY PLANS".
2. For utility information see "UTILITY PLANS".
3. For drainage information see "DRAINAGE PLANS".
4. Controlling field conditions to be verified prior to begin of construction work.
5. For weephole and wall drain details see sheet "RETAINING WALL NO. 7 - WALL DETAILS 2".
6. Contractor shall install temporary shoring prior to excavating soil behind exist wall.
7. For architectural treatment, see "ARCHITECTURAL PLANS".
8. For limits of payment for excavation and backfill, see sheet "RETAINING WALL NO. 4 - WALL DETAILS".

1 REPLACED PER ADDENDUM No. 1 DATED SEPTEMBER 23, 2016

DESIGN OVERSIGHT 07-14-16 SIGN OFF DATE	DESIGN	BY G. Yu	CHECKED M. Vargas	LOAD & RESISTANCE FACTOR DESIGN	LIVE LOADING: HL-93
	DETAILS	BY H. Li	CHECKED G. Yu	LAYOUT BY H. Li	CHECKED M. Vargas
	QUANTITIES	BY M. Vargas	CHECKED G. Yu	SPECIFICATIONS BY D. Desai	PLANS AND SPECS COMPARED D. Desai

PREPARED FOR THE STATE OF CALIFORNIA DEPARTMENT OF TRANSPORTATION

Erik Okada — PROJECT ENGINEER

BRIDGE NO. 28E0217 — POST MILES 5.92

RETAINING WALL No. 7
PLAN AND ELEVATION

DESIGN GENERAL PLAN SHEET (ENGLISH) (REV. 06-01-09)

ORIGINAL SCALE IN INCHES FOR REDUCED PLANS 0 1 2 3

UNIT: 0746
PROJECT NUMBER & PHASE: 04140005521

DISREGARD PRINTS BEARING EARLIER REVISION DATES

REVISION DATES (PRELIMINARY STAGE ONLY)

SHEET 24 OF 33

FILE => 024-28-0100r-g-rw_1o8.dgn

USERNAME => hu111 DATE PLOTTED => 9/23/2016 TIME PLOTTED => 9:50:48 AM

DIST	COUNTY	ROUTE	POST MILES TOTAL PROJECT	SHEET No	TOTAL SHEETS
04	CC/Mrn	580	5.0/7.8, 0.0/3.3	531	579

REGISTERED CIVIL ENGINEER — DATE 07-14-16

PLANS APPROVAL DATE 07-26-16

REGISTERED PROFESSIONAL ENGINEER — E. OKADA — No. S4415 — Exp. 6-30-18 — STRUCTURAL — STATE OF CALIFORNIA

The State of California or its officers or agents shall not be responsible for the accuracy or completeness of scanned copies of this plan sheet.

HNTB CORPORATION
1111 BROADWAY
9TH FLOOR
OAKLAND, CA 94607

BAY AREA TOLL AUTHORITY
375 BEALE STREET, SUITE 800
SAN FRANCISCO, CA 94105

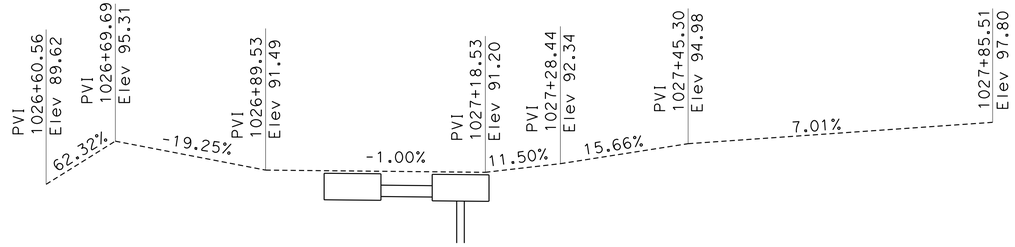

GUTTER PROFILE 1

1"=10'-0"

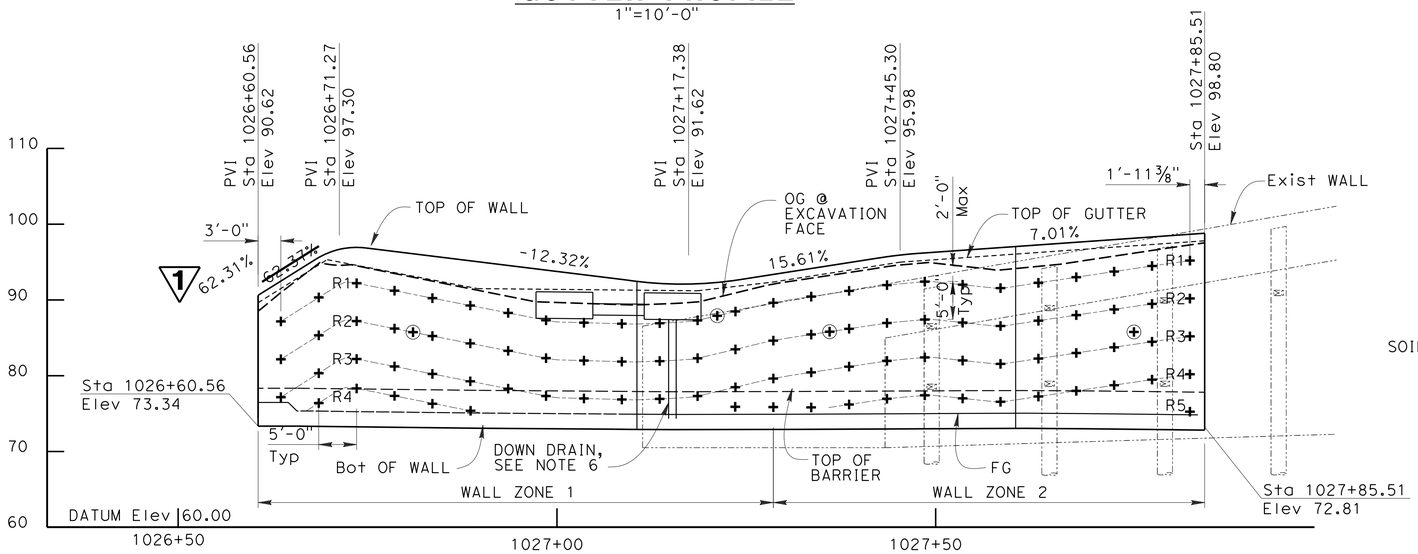

MIRRORED ELEVATION

1"=10'-0"

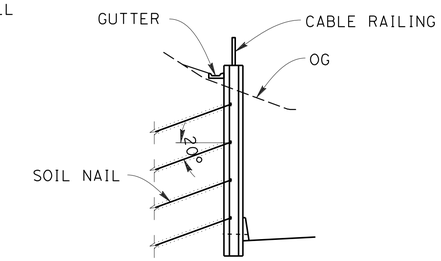

@ STA 1027+85

TYPICAL SECTION

1"=10'-0"

NOTES:

1. The contractor shall verify all controlling field dimensions before ordering or fabricating any material.
2. The dimension on the plans are approximate. Prior to installing soil nails, contractor shall verify the existing wall and pile locations.
3. Install soil nail normal to retaining wall LOL.
4. Max 5'-0" Excavation lift.
5. The contractor shall provide and maintain soil stablity above and below soil nail anchors.
6. For Down Drain Details see "DRAIN DETAILS NO. 2" sheet.

LEGEND:

- INDICATES EXIST TIE-BACK ANCHOR
- + INDICATES PRODUCTION NAIL
- ⊕ INDICATES TEST NAIL
- INDICATES EXIST STRUCTURE
- INDICATES NAIL ROW DESIGNATION LINE
- Le: EMBEDMENT LENGTH (Ft)
- Deg°: NAIL DECLINATION (Deg)
- S: HORIZONTAL SPACING (Ft)
- BAR#: MINIMUM SOIL NAIL BAR SIZE
- Pn: NOMINAL PULLOUT RESISTANCE (KLF)

SOIL NAIL SCHEDULE

WALL ZONE	ROW	Le	Deg	S	BAR #	Pn	DESCRIPTION
1	R1-R2	35	15	5	9	3.02	SILTY SAND
	R3-R4	25	15	5	9	3.02	SILTY SAND
2	R1-R2	30	15	5	9	2.26	HIGHLY WEATHERED SANDSTONE
	R3-R5	20	15	5	9	2.94	MODERATELY WEATHERED SANDSTONE

1 REPLACED PER ADDENDUM No. 1 DATED SEPTEMBER 23, 2016

DESIGN OVERSIGHT 07-14-16 SIGN OFF DATE

	BY	CHECKED
DESIGN	G. Yu	M. Vargas
DETAILS	H. Li	M. Vargas
QUANTITIES	G. Yu	M. Vargas

PREPARED FOR THE STATE OF CALIFORNIA DEPARTMENT OF TRANSPORTATION

Erik Okada — PROJECT ENGINEER

BRIDGE NO. 28E0217 — POST MILES 5.92

RETAINING WALL No. 7
SOIL NAIL LAYOUT

DESIGN DETAIL SHEET (ENGLISH) (REV. 03/14/12)

ORIGINAL SCALE IN INCHES FOR REDUCED PLANS 0 1 2 3

UNIT: 0746
PROJECT NUMBER & PHASE: 04140005521 CONTRACT NO.: 04-2J6804

DISREGARD PRINTS BEARING EARLIER REVISION DATES

REVISION DATES

SHEET 25 OF 33

FILE => 025-28-0100r-g-rwdt18.dgn

USERNAME => $USER$ DATE PLOTTED => $DATE$ TIME PLOTTED => $TIME$

DIST	COUNTY	ROUTE	POST MILES TOTAL PROJECT	SHEET No	TOTAL SHEETS
04	CC,Mrn	580	5.0/7.8, 0.0/3.3	535	579

REGISTERED CIVIL ENGINEER 07-14-16 DATE

07-26-16
PLANS APPROVAL DATE

REGISTERED PROFESSIONAL ENGINEER E. OKADA No. S4415 Exp. 6-30-18 STRUCTURAL STATE OF CALIFORNIA

The State of California or its officers or agents shall not be responsible for the accuracy or completeness of scanned copies of this plan sheet.

HNTB CORPORATION
1111 BROADWAY
9TH FLOOR
OAKLAND, CA 94607

BAY AREA TOLL AUTHORITY
375 BEALE STREET, SUITE 800
SAN FRANCISCO, CA 94105

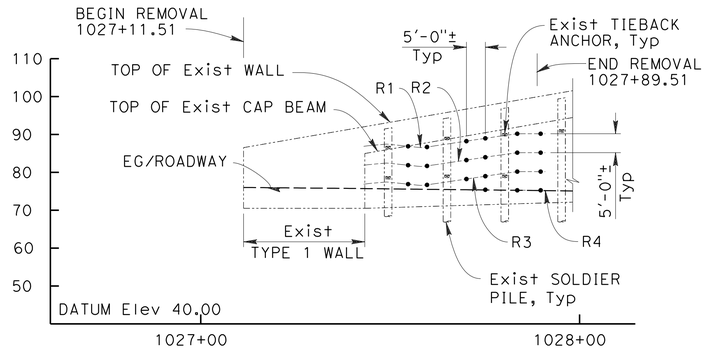

SUGGESTED TEMPORARY SOIL NAIL LAYOUT (MIRRORED)

1"=20'-0"

EXISTING WALL INFORMATION:

1. The maximum cantilevered wall height without support when tiebacks are cut is 8'-0".
2. The maximum allowed construction surcharge q = 500 psf. Higher loads may be used as long as the contractor determines that a higher load will not compromise the wall's stability and safety of the operation.
3. Maximum force per tieback:
   Tmax: ±90 kips (ROW A)
   Tmax: ±76 kips (ROW B)
4. The punching shear and flexural capacity of the wall are:
   V = 100 kips, M = 60 kip-ft.

SOIL PROPERTIES

STATION LIMIT	DEPTH* (ft)	UNIT WEIGHT (pcf)	FRICTION ANGLE	COHESION (psf)	ULTIMATE BOND STRENGTH, q_u (psi)	SOIL TYPE
"CC-M" LINE Sta 1027+25 TO "CC-M" LINE Sta 1028+25	0-20	130	36	150	10	SILTY SAND
	20-40	130	40	300	13	MODERATELY WEATHERED SANDSTONE

* Note: The depth is the distance from the top of the wall.

TEMPORARY SUPPORT CONSTRUCTION NOTES:

1. The existing tie back anchor wall cannot self-support when the tie-backs are removed.
2. A temporary support system shall be installed prior to initiating excavation and construction of the soil nail retaining wall.
3. The details shown on this drawing including temporary nail spacing and nail locations are shown for illustration only. The contractor is allowed to develop ~~their own temporary wall support system.~~ responsible for the design of the temporary soil nails. (1)
4. ~~During wall construction, the contractor shall be responsible for monitoring and maintaining the existing wall stability during construction.~~ (1)
   During wall demolition and construction of the new wall, the existing wall's lateral deflection is not to exceed 0.004H. H is defined as the height of the wall from the existing finished grade to the top of the existing cap beam or relative top of wall as wall demolition proceeds. The contractor must monitor and ensure this deflection is not exceeded.
5. If attachment or drilling to existing wall is required, the contractor shall verify location of curtain Wall reinforcement and location of existing CIDH solider piles and tie-back anchors.
6. For limits of construction envelope in front of the wall, see civil drawings.
7. Difficulty in drilling and excavation may be encountered due to the potential encountering of grout from the existing tieback anchors and the temporary soil nails. (1)

LEGEND:

- • INDICATES TEMPORARY SOIL NAIL
- INDICATES EXIST TIE BACK ANCHOR

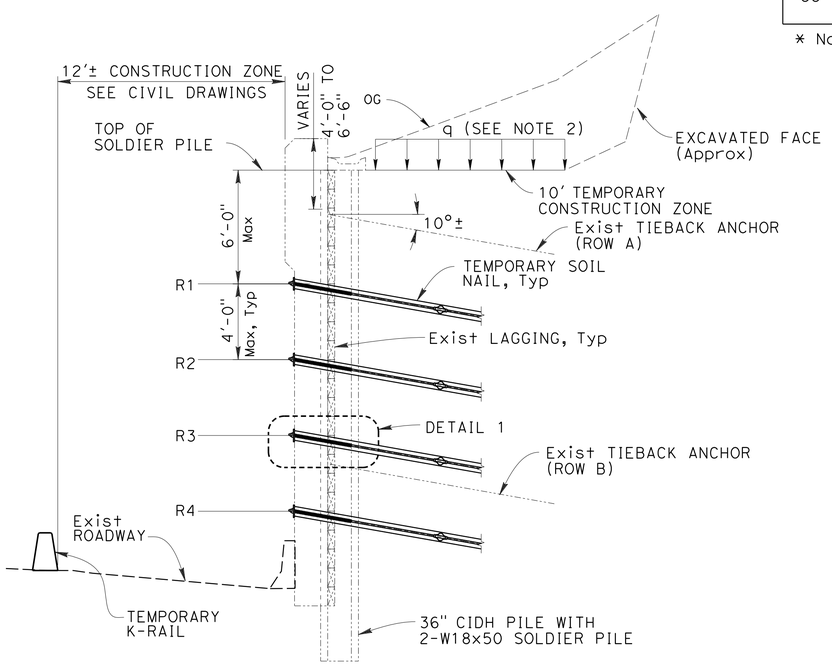

SUGGESTED TYPICAL SECTION

¼"=1'-0"

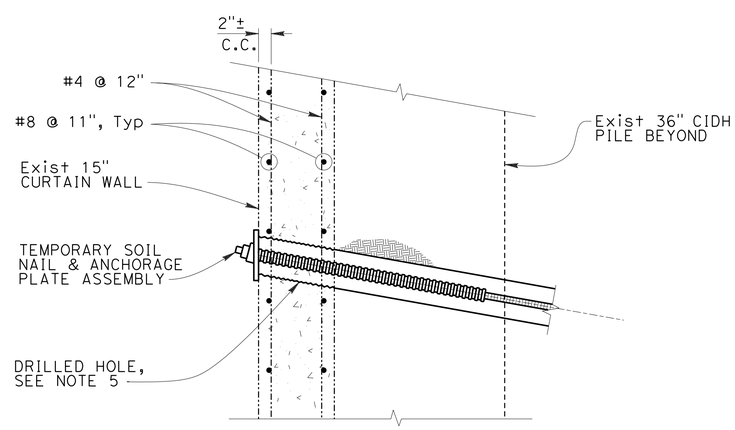

DETAIL 1

1"=1'-0"

(1) **REPLACED PER ADDENDUM No. 1 DATED SEPTEMBER 23, 2016**

DESIGN OVERSIGHT 07-14-16 SIGN OFF DATE	DESIGN	BY M. Vargas	CHECKED G. Yu	PREPARED FOR THE STATE OF CALIFORNIA DEPARTMENT OF TRANSPORTATION	Erik Okada PROJECT ENGINEER	BRIDGE NO. 28E0215 POST MILES 5.92	RETAINING WALL No. 7 TEMPORARY SHORING
	DETAILS	BY H. Li	CHECKED M. Vargas				
	QUANTITIES	BY M. Vargas	CHECKED G. Yu				

DESIGN DETAIL SHEET (ENGLISH) (REV. 03/14/12)

ORIGINAL SCALE IN INCHES FOR REDUCED PLANS 0 1 2 3

UNIT: 0746
PROJECT NUMBER & PHASE: 04140005521 CONTRACT NO.: 04-2J6804

DISREGARD PRINTS BEARING EARLIER REVISION DATES

REVISION DATES

SHEET 29 OF 33

FILE => 029-28-0100r-g-rwdt22.dgn

USERNAME => hulit DATE PLOTTED => 9/23/2016 TIME PLOTTED => 9:50:50 AM

DIST	COUNTY	ROUTE	POST MILES TOTAL PROJECT	SHEET No	TOTAL SHEETS
04	CC,Mrn	580	5.0/7.8, 0.0/3.3	540	579

REGISTERED CIVIL ENGINEER — DATE 07-14-16

PLANS APPROVAL DATE 07-26-16

REGISTERED PROFESSIONAL ENGINEER — E. OKADA — No. S4415 — Exp. 6-30-18 — STRUCTURAL — STATE OF CALIFORNIA

The State of California or its officers or agents shall not be responsible for the accuracy or completeness of scanned copies of this plan sheet.

HNTB CORPORATION
1111 BROADWAY
9TH FLOOR
OAKLAND, CA 94607

BAY AREA TOLL AUTHORITY
375 BEALE STREET, SUITE 800
SAN FRANCISCO, CA 94105

SCOFIELD UC QUANTITIES

STRUCTURAL CONCRETE, BRIDGE	22	CY
BAR REINFORCING STEEL	3824	LBS
DRILL AND BOND (DOWEL BAR)	1607	EA
PROTECTION SYSTEM	1	LUMP SUM
PREPARE BRIDGE DECK SURFACE	5000	SQ FT
PLACE POLYESTER CONCRETE OVERLAY	5000	SQ FT
REMOVE CONCRETE BARRIER	677	LF
REMOVE CHAIN LINK FENCE	677	LF

SCOFIELD UC QUANTITIES (CONTINUED)

CONCRETE BARRIER TYPE 732 (MOD)	707 LF
CHAIN LINK RAILING (TYPE CL-8 MOD 2)	677 LF
FURNISH POLYESTER CONCRETE OVERLAY	409 CF
BICYCLE RAILING	707 LF
MISCELLANEOUS METAL (BRIDGE)	2297 LBS

NOTES:

1. All ℄ bent bearings are S16°00'00"E.

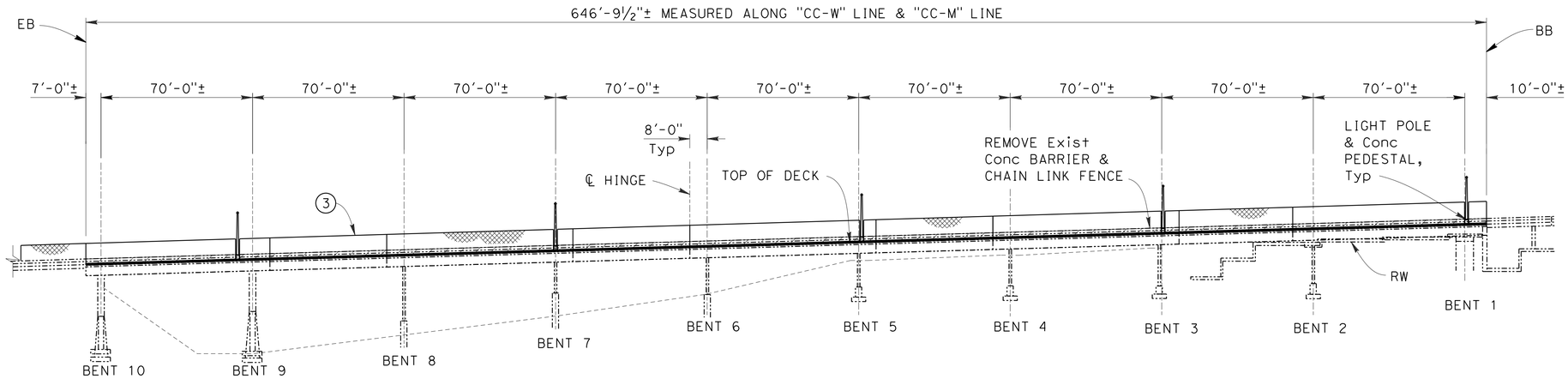

DATUM Elev = -10.00

LEGEND:

- INDICATES DIRECTION OF TRAFFIC
- NEW CONCRETE BARRIER
- TEMPORARY BARRIER (TYPE K)
- EXISTING STRUCTURE
- NEW CONSTRUCTION
- REMOVE CONCRETE BARRIER/CHAIN LINK FENCE
- BRIDGE LIGHT POLE
- POLYESTER CONCRETE OVERLAY

WB BRIDGE DEVELOPED ELEVATION

1"=30'-0"

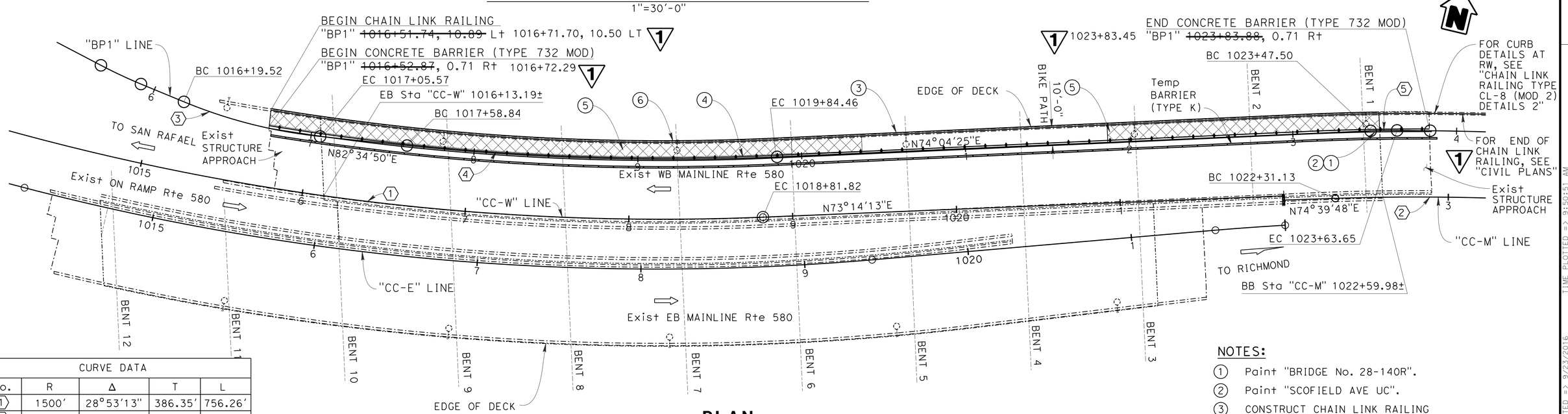

PLAN

1"=30'-0"

CURVE DATA				
No.	R	Δ	T	L
1	1500'	28°53'13"	386.35'	756.26'
2	1615'	39°59'35"	587.70'	1127.29'
3	299'	16°29'25"	43.27'	86.06'
4	1523'	8°29'17"	113.02'	225.62'
5	301'	3°04'33"	8.08'	16.16'

NOTES:

1. Paint "BRIDGE No. 28-140R".
2. Paint "SCOFIELD AVE UC".
3. CONSTRUCT CHAIN LINK RAILING
4. CONSTRUCT CONCRETE BARRIER (TYPE 732 MODIFIED)
5. CONSTRUCT POLYESTER CONCRETE OVERLAY
6. REMOVE CONCRETE BARRIER AND CHAIN LINK FENCE

1 REPLACED PER ADDENDUM No. 1 DATED SEPTEMBER 23, 2016

DESIGN OVERSIGHT 07-14-16 SIGN OFF DATE	DESIGN	BY G. Iwamoto	CHECKED E. Okada	LOAD & RESISTANCE FACTOR DESIGN	LIVE LOADING: HL-93 W/"LOW-BOY"; PERMIT DESIGN VEHICLE
	DETAILS	BY H. Li	CHECKED G. Iwamoto	LAYOUT BY H. Li	CHECKED G. Iwamoto
	QUANTITIES	BY E. Okada	CHECKED G. Yu	SPECIFICATIONS BY D. Desai	PLANS AND SPECS COMPARED D. Desai

PREPARED FOR THE STATE OF CALIFORNIA DEPARTMENT OF TRANSPORTATION

Erik Okada — PROJECT ENGINEER

BRIDGE NO. 28-140R — POST MILES 5.80

SCOFIELD AVENUE UNDERCROSSING (MODIFY)

GENERAL PLAN No. 1

DESIGN GENERAL PLAN SHEET (ENGLISH) (REV. 06-01-09)

ORIGINAL SCALE IN INCHES FOR REDUCED PLANS 0 1 2 3

UNIT: 0746
PROJECT NUMBER & PHASE: 04140005521

DISREGARD PRINTS BEARING EARLIER REVISION DATES

REVISION DATES (PRELIMINARY STAGE ONLY)

SHEET 1 OF 12

FILE => 050-28-0140-a-gp01.dgn

USERNAME => RuiTT DATE PLOTTED => 9/23/2016 TIME PLOTTED => 9:50:51 AM

DIST	COUNTY	ROUTE	POST MILES TOTAL PROJECT	SHEET No	TOTAL SHEETS
04	CC,Mrn	580	5.0/7.8, 0.0/3.3	543	579

REGISTERED CIVIL ENGINEER — DATE 07-14-16

PLANS APPROVAL DATE 07-26-16

REGISTERED PROFESSIONAL ENGINEER — E. OKADA — No. S4415 — Exp. 6-30-18 — STRUCTURAL — STATE OF CALIFORNIA

The State of California or its officers or agents shall not be responsible for the accuracy or completeness of scanned copies of this plan sheet.

HNTB CORPORATION
1111 BROADWAY
9TH FLOOR
OAKLAND, CA 94607

BAY AREA TOLL AUTHORITY
375 BEALE STREET, SUITE 800
SAN FRANCISCO, CA 94105

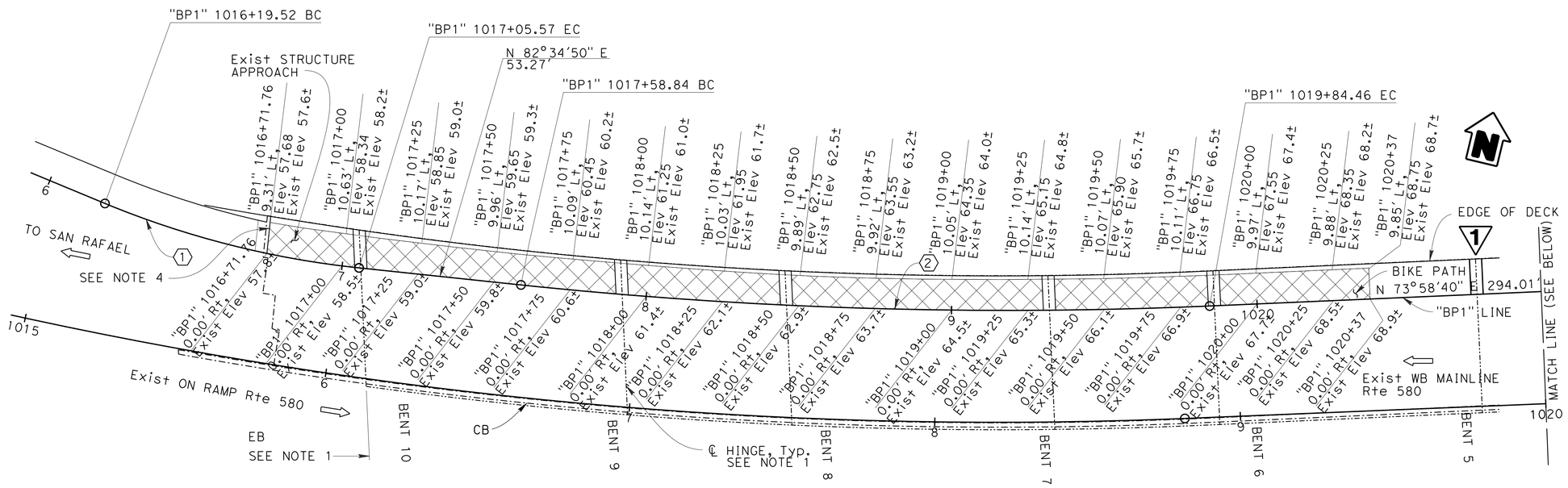

PARTIAL PLAN 1

1"=20'-0"

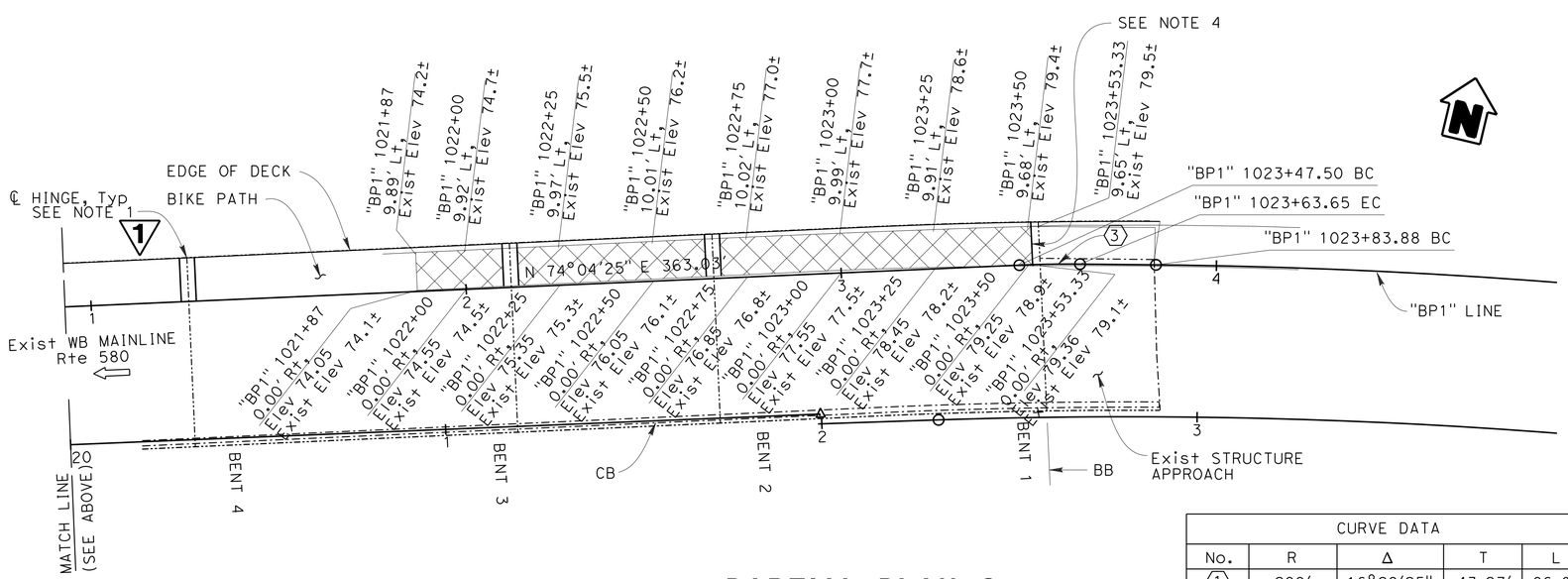

PARTIAL PLAN 2

1"=20'-0"

CURVE DATA				
No.	R	Δ	T	L
1	299'	16°29'25"	43.27'	86.06'
2	1523'	8°29'17"	113.02'	225.62'
3	301'	3°04'33"	8.08'	16.16'

LEGEND:

INDICATES POLYESTER CONCRETE OVERLAY

NOTES:

1. For deck joint and joint armor detail, see "DECK JOINT DETAIL" on "PAVING DETAILS" sheet.
2. For paving detail on "PARTIAL PLAN 1", see "PAVING DETAIL 1" on "PAVING DETAILS" sheet.
3. For paving detail on "PARTIAL PLAN 2", see "PAVING DETAIL 2" on "PAVING DETAILS" sheet.
4. For polyester concrete and asphalt concrete interface, see "APPROACH SLAB PAVING DETAIL" on "PAVING DETAILS" sheet
5. When polyester concrete ends, surface shall conform to existing deck or pavement.
6. For limits of paving, see "LAYOUT PLANS".
7. Pavement elevations that end in "±" shall match existing pavement elevation.

1 REPLACED PER ADDENDUM No. 1 DATED SEPTEMBER 23, 2016

DESIGN OVERSIGHT 07-14-16 SIGN OFF DATE

	BY	CHECKED
DESIGN	G. Iwamoto	M. Vargas
DETAILS	H. Li	M. Vargas
QUANTITIES	E. Okada	G. Yu

PREPARED FOR THE STATE OF CALIFORNIA DEPARTMENT OF TRANSPORTATION

Erik Okada — PROJECT ENGINEER

BRIDGE NO. 28-140R — POST MILES 5.80

SCOFIELD AVENUE UNDERCROSSING (MODIFY)
PAVEMENT ELEVATIONS

DESIGN DETAIL SHEET (ENGLISH) (REV. 03/14/12)

ORIGINAL SCALE IN INCHES FOR REDUCED PLANS 0 1 2 3

UNIT: 0746
PROJECT NUMBER & PHASE: 04140005521 CONTRACT NO.: 04-2J6804

DISREGARD PRINTS BEARING EARLIER REVISION DATES

REVISION DATES

SHEET 4 OF 12

FILE => 053-28-0140-d-dc.dgn

USERNAME => $USER$ DATE PLOTTED => $DATE$ TIME PLOTTED => $TIME$

DIST	COUNTY	ROUTE	POST MILES TOTAL PROJECT	SHEET No	TOTAL SHEETS
04	CC,Mrn	580	5.0/7.8, 0.0/3.3	547	579

REGISTERED CIVIL ENGINEER 07-14-16 DATE

07-26-16
PLANS APPROVAL DATE

REGISTERED PROFESSIONAL ENGINEER E. OKADA No. S4415 Exp. 6-30-18 STRUCTURAL STATE OF CALIFORNIA

The State of California or its officers or agents shall not be responsible for the accuracy or completeness of scanned copies of this plan sheet.

HNTB CORPORATION
1111 BROADWAY
9TH FLOOR
OAKLAND, CA 94607

BAY AREA TOLL AUTHORITY
375 BEALE STREET, SUITE 800
SAN FRANCISCO, CA 94105

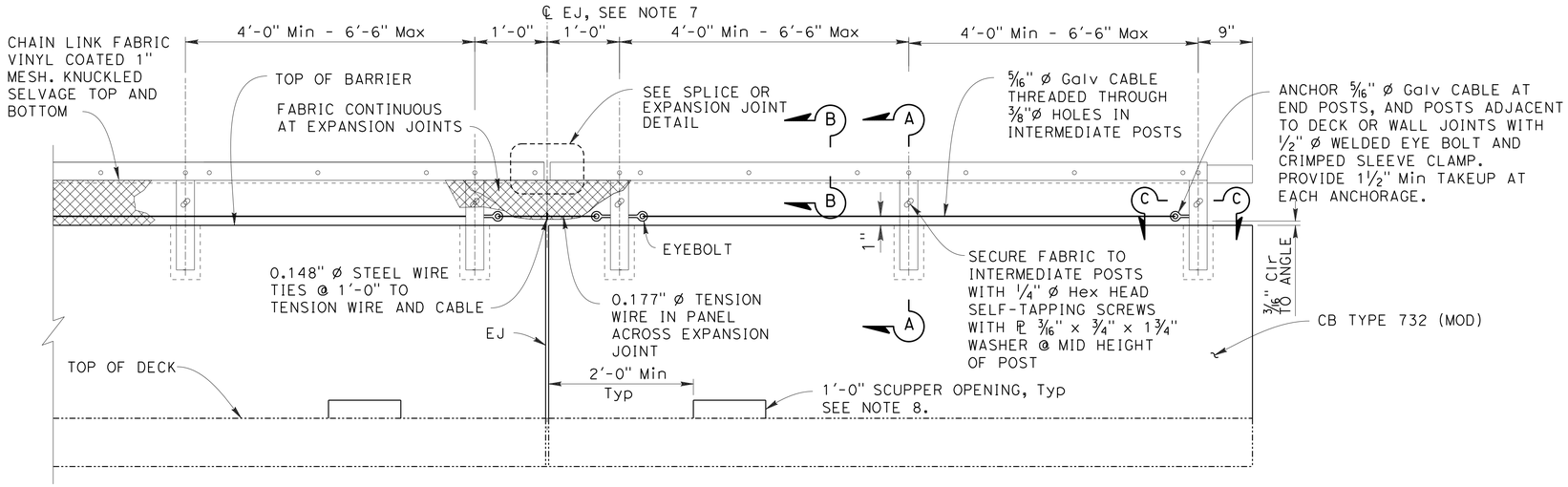

TYPICAL BICYCLE RAILING DETAILS

Scale: 1"=1'-0"

1 REPLACED PER ADDENDUM No. 1 DATED SEPTEMBER 23, 2016

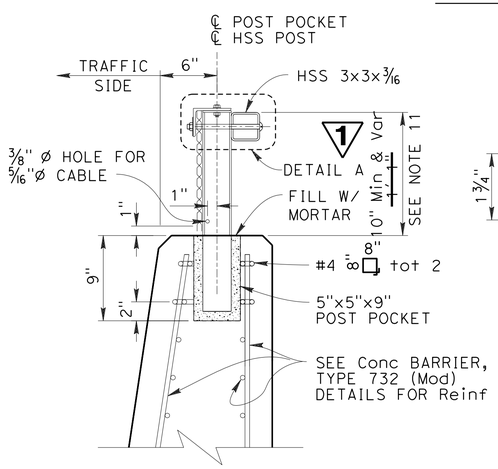

SECTION A-A

Scale: 1 1/2" = 1'-0"

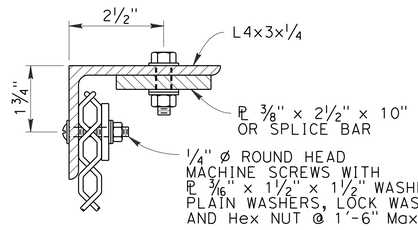

SECTION B-B

Scale: 6" = 1'-0"

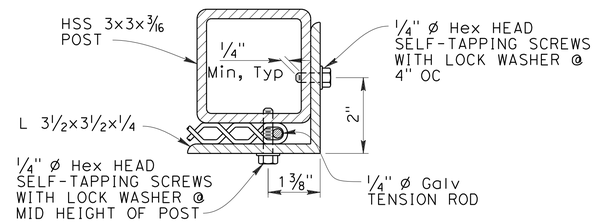

SECTION C-C

Scale: 6" = 1'-0"

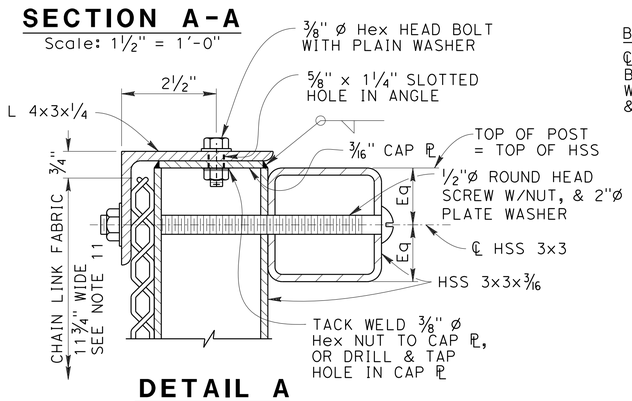

DETAIL A

Scale: 6" = 1'-0"

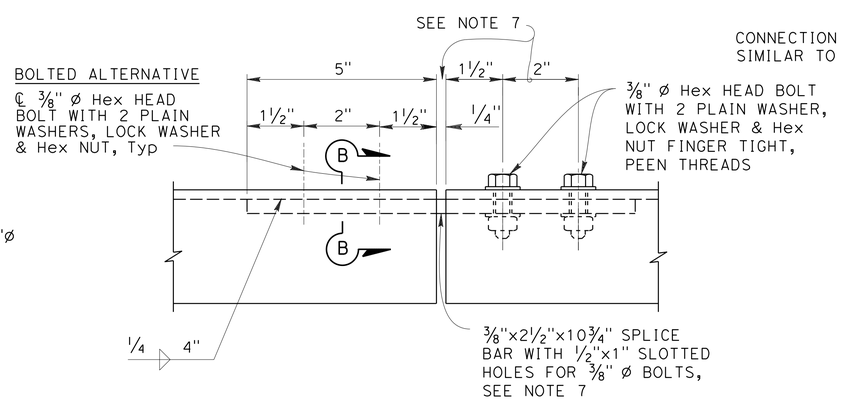

SPLICE OR EXPANSION JOINT DETAIL

Scale: 6" = 1'-0"

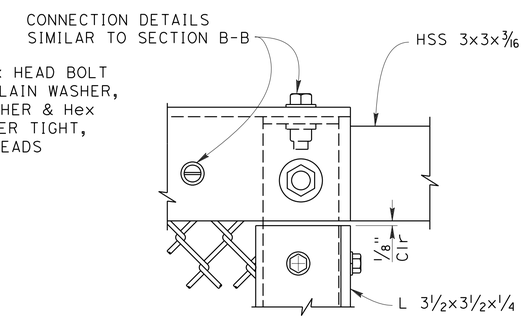

END POST ELEVATION

Scale: 6" = 1'-0"

NOTES:

1. Posts shall be vertical.
2. Railing shall conform to horizontal and vertical alignment. When railing is placed on a curved horizontal alignment with radius of 148'-0" or less, thread the 5/16" Ø cable through 3/8" Ø welded eye rods embedded 4" into the top of the concrete parapet and equally spaced to limit the midordinate distance between the 5/16" Ø cable and the curve to 1" maximum. Horizontal angle shall be bent to conform to horizontal alignment if radius is 148'-0" or less and may be on 10'-0" chords if radius is over 148'-0".
3. Horizontal angle shall be continuous over not less than two intermediate posts, except that a shorter length is permitted at expansion joints, electroliers and other rail discontinuities.
4. When rail is on slope, place fabric parallel to slope.
5. For tube expansion joint details, splice detail and rail cap details, see sheet "BARRIER DETAILS NO. 3".
6. Provide thimbles at all cable loops.
7. Expansion joint same dimension as expansion joint in deck or wall. Increase slotted hole length and splice bar length correspondingly. For conduit expansion fitting see Std plans ES-9B.
8. See sheet "BARRIER DETAILS - 1" for scupper spacing.
9. All barrier reinforcement shall be epoxy coated.
10. Powder coat all steel and connection hardware.
11. Height of bicycle railing varies so that top of railing is 42" minimum above top of pavement. See "PAVEMENT ELEVATIONS" sheet for more information.

DESIGN OVERSIGHT
07-14-16
SIGN OFF DATE

	BY	CHECKED
DESIGN	G. Iwamoto	G. Yu
DETAILS	H. Paige	G. Yu
QUANTITIES	E. Okada	G. Yu

PREPARED FOR THE STATE OF CALIFORNIA DEPARTMENT OF TRANSPORTATION

Erik Okada
PROJECT ENGINEER

BRIDGE NO. 28-140R
POST MILES 5.80

SCOFIELD AVENUE UNDERCROSSING (MODIFY)

BARRIER DETAILS NO. 2

DESIGN DETAIL SHEET (ENGLISH) (REV. 03/14/12)

ORIGINAL SCALE IN INCHES FOR REDUCED PLANS 0 1 2 3

UNIT: 0746
PROJECT NUMBER & PHASE: 04140005521 CONTRACT NO.: 04-2J6804

DISREGARD PRINTS BEARING EARLIER REVISION DATES

REVISION DATES

SHEET 8 OF 12

FILE => 057-28-0140-t-brdt02.dgn

USERNAME => $USER$ DATE PLOTTED => $DATE$ TIME PLOTTED => $TIME$

DIST	COUNTY	ROUTE	POST MILES TOTAL PROJECT	SHEET No	TOTAL SHEETS
04	CC,Mrn	580	5.0/7.8, 0.0/3.3	556	579

REGISTERED CIVIL ENGINEER 07-14-16 DATE

07-26-16
PLANS APPROVAL DATE

REGISTERED PROFESSIONAL ENGINEER E. OKADA No. S4415 Exp. 6-30-18 STRUCTURAL STATE OF CALIFORNIA

The State of California or its officers or agents shall not be responsible for the accuracy or completeness of scanned copies of this plan sheet.

HNTB CORPORATION
1111 BROADWAY
9TH FLOOR
OAKLAND, CA 94607

BAY AREA TOLL AUTHORITY
375 BEALE STREET, SUITE 800
SAN FRANCISCO, CA 94105

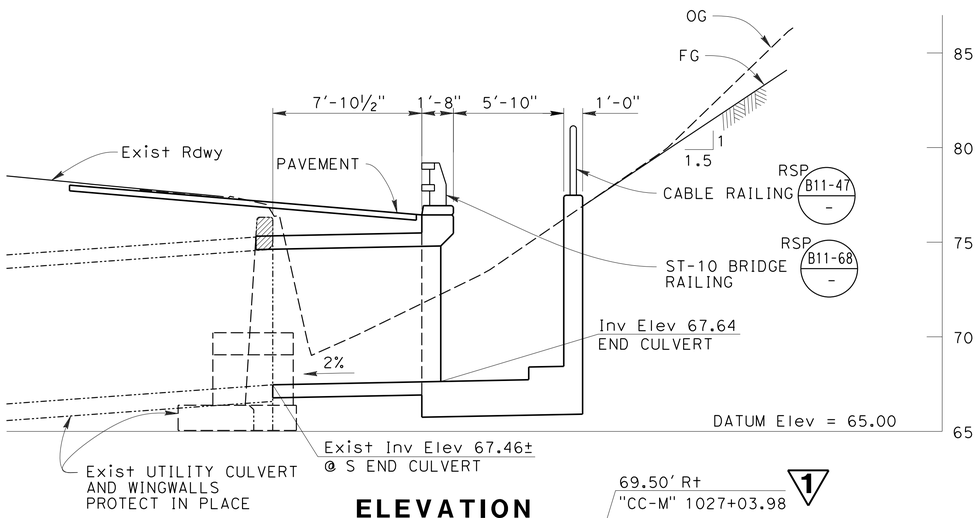

ELEVATION

¼"=1'-0"

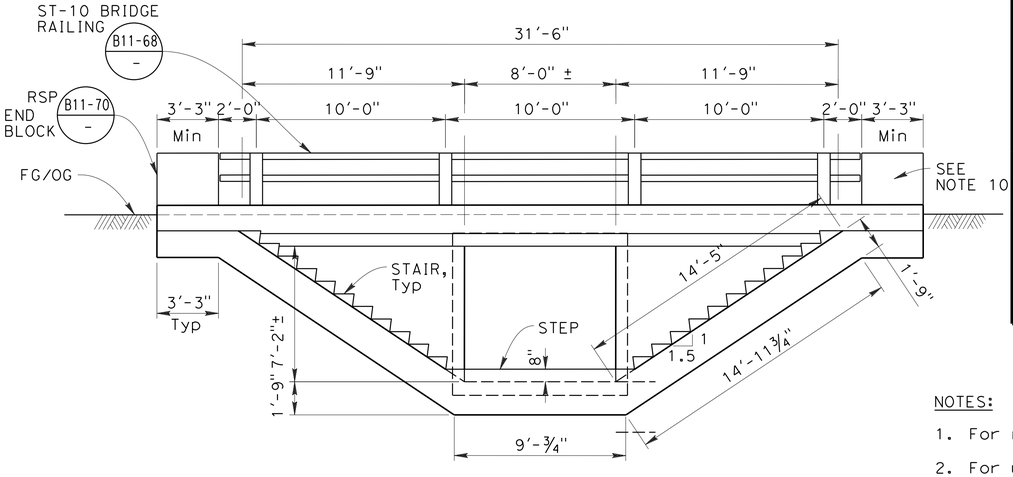

TYPICAL SECTION

¼"=1'-0"

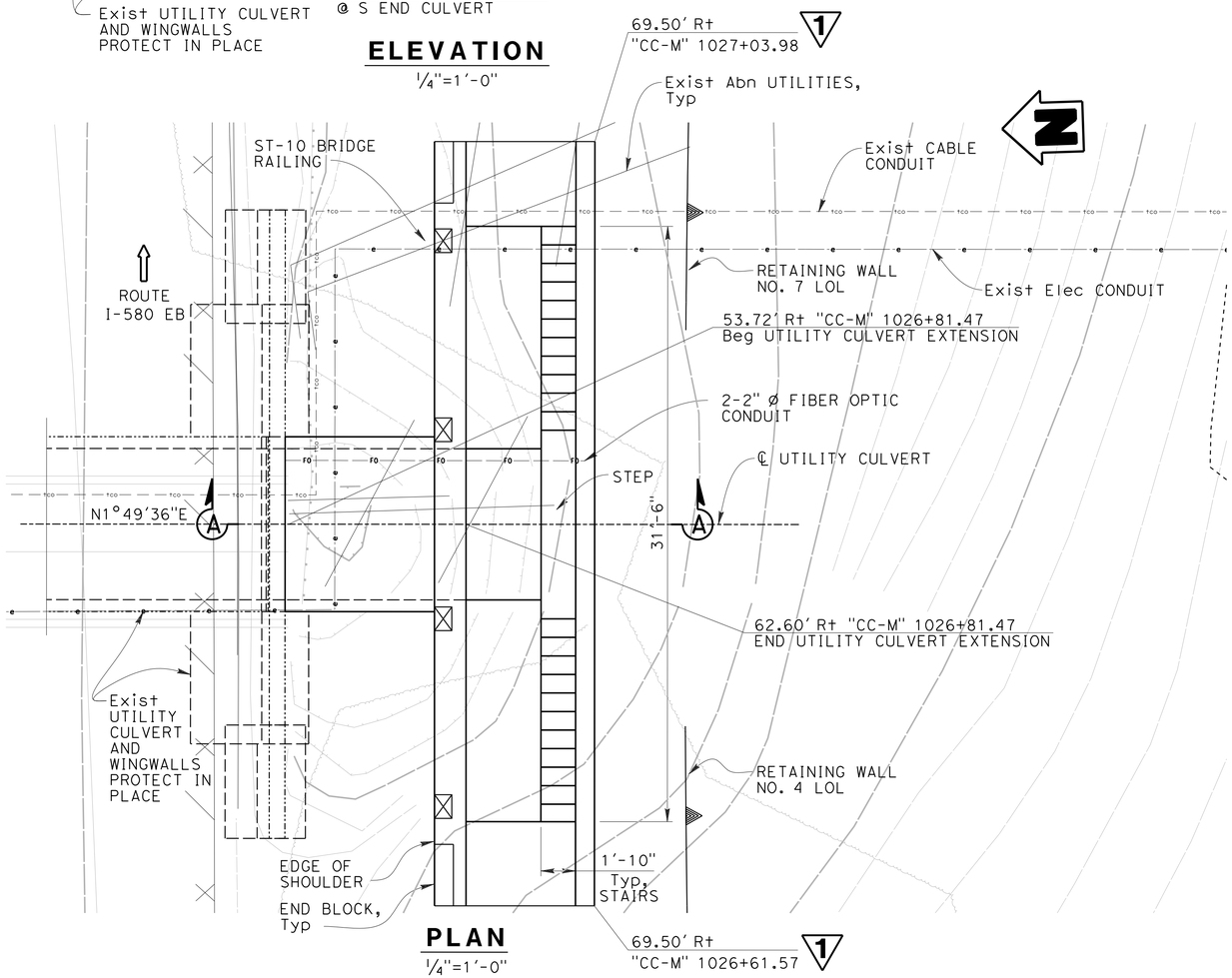

PLAN

¼"=1'-0"

NOTES:

1. For roadway information see "ROADWAY PLANS".
2. For utility information see "UTILITY PLANS". Protect all utilities in place unless noted otherwise on the "UTILITY PLANS".
3. For drainage information see "DRAINAGE PLANS".
4. For Box Culvert Details not shown see 2010 Standard Plans D80 and RSP D82.
5. For allowable construction loads on culverts see 2010 Standard Plan D88.
6. Controlling field conditions to be verified prior to start of construction.
7. For excavation and backfill limits of payment see 2010 Standard Plan A62E.
8. For Section A-A, see sheet "UTILITY CULVERT EXTENSION - DETAILS".
9. For pavement structural section, see "TYPICAL CROSS SECTIONS-X-6".
10. For typical connection details of MGS to bridge rail, see Revised Standard Plans RSP A77U1 and RSP A77U2.

UTILITY CULVERT EXTENSION QUANTITIES

STRUCTURAL CONCRETE, BOX CULVERT	47	CY
BAR REINFORCING STEEL	7,704	LB
STRUCTURE EXCAVATION (CULVERT)	69	CY
STRUCTURE BACKFILL (CULVERT)	13	CY
1 ~~ROADWAY EMBANKMENT~~	~~24~~	~~CY~~
DRILL AND BOND DOWEL (CHEMICAL ADHESIVE)	36	EA
REMOVE CONCRETE STRUCTURE	2	CY
PIPE HANDRAILING	40	LF
CALIFORNIA ST-10 BRIDGE RAIL	34	LF

LEGEND:

- DENOTES Exist STRUCTURE
- DENOTES NEW STRUCTURE
- DENOTES LIMITS OF REMOVE CONCRETE STRUCTURE

1 **REPLACED PER ADDENDUM No. 1 DATED SEPTEMBER 23, 2016**

DESIGN OVERSIGHT	DESIGN	BY E. Okada	CHECKED M. Vargas	LOAD & RESISTANCE FACTOR DESIGN	LIVE LOADING: HL-93
07-14-16 SIGN OFF DATE	DETAILS	BY H. Paige	CHECKED M. Vargas	LAYOUT BY H. Paige	CHECKED E. Okada
	QUANTITIES	BY E. Okada	CHECKED M. Vargas	SPECIFICATIONS BY D. Desai	PLANS AND SPECS COMPARED D. Desai

PREPARED FOR THE STATE OF CALIFORNIA DEPARTMENT OF TRANSPORTATION

Erik Okada
PROJECT ENGINEER

BRIDGE NO. NONE
POST MILES -

UTILITY CULVERT EXTENSION
GENERAL PLAN

DESIGN GENERAL PLAN SHEET (ENGLISH) (REV. 06-01-09)

ORIGINAL SCALE IN INCHES FOR REDUCED PLANS 0 1 2 3

UNIT: 0746
PROJECT NUMBER & PHASE: 04140005521

DISREGARD PRINTS BEARING EARLIER REVISION DATES

REVISION DATES (PRELIMINARY STAGE ONLY)

SHEET 1 OF 4

FILE => 075-28-0100-c-sp01.dgn

USERNAME => $USER$ DATE PLOTTED => $DATE$ TIME PLOTTED => $TIME$

DIST	COUNTY	ROUTE	POST MILES TOTAL PROJECT	SHEET No	TOTAL SHEETS
04	CC,Mrn	580	5.0/7.8, 0.0/3.3	562	579

REGISTERED CIVIL ENGINEER 07-14-16 DATE

07-26-16
PLANS APPROVAL DATE

REGISTERED PROFESSIONAL ENGINEER E. OKADA No. S4415 Exp. 6-30-18 STRUCTURAL STATE OF CALIFORNIA

The State of California or its officers or agents shall not be responsible for the accuracy or completeness of scanned copies of this plan sheet.

HNTB CORPORATION
1111 BROADWAY
9TH FLOOR
OAKLAND, CA 94607

BAY AREA TOLL AUTHORITY
375 BEALE STREET, SUITE 800
SAN FRANCISCO, CA 94105

NOTES:

1. The Contractor shall verify all controlling field dimensions before ordering or fabricating any material.
2. Coordinate LUS Sign wiring and manufacturer requirements.
3. LINDAPTER HSR beam clamp Type AF or equal.

LEGEND:

EXISTING STRUCTURE

NEW CONSTRUCTION

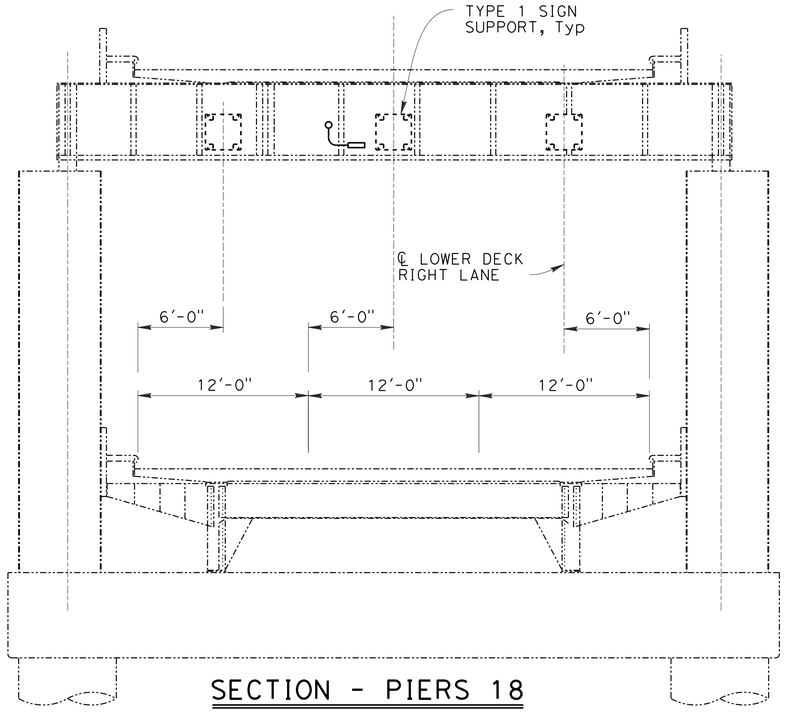

SECTION - PIERS 18

3/16" = 1'-0"

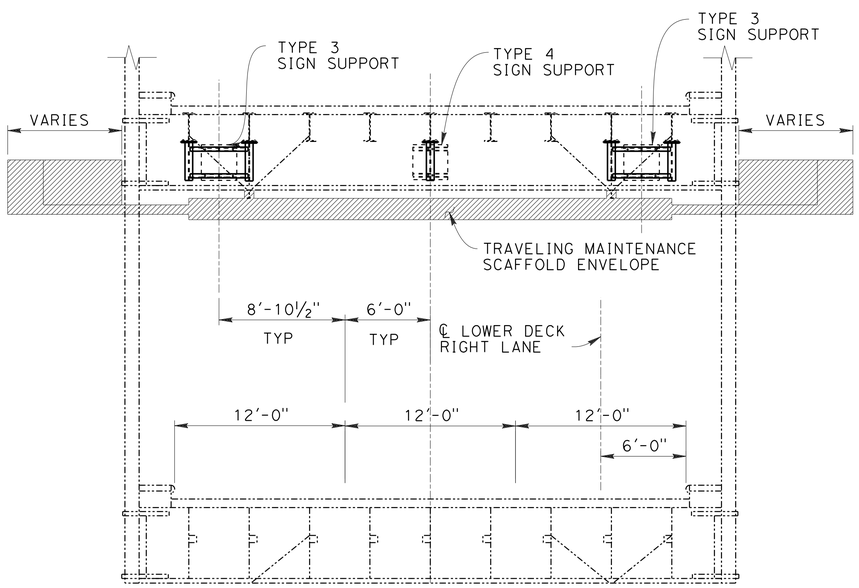

TYPICAL SECTION - 289' TRUSS & MAIN SPANS

3/16" = 1'-0"

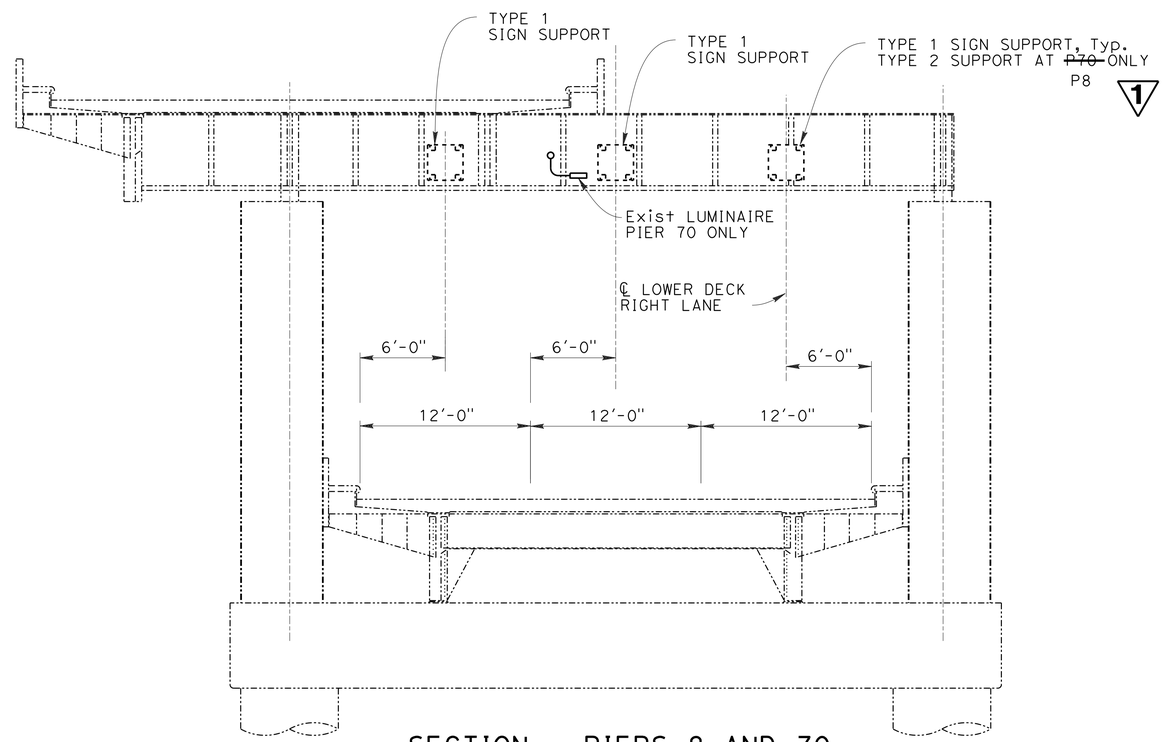

SECTION - PIERS 8 AND 70

3/16" = 1'-0"

1 **REPLACED PER ADDENDUM No. 1 DATED SEPTEMBER 23, 2016**

DESIGN OVERSIGHT
07-14-16
SIGN OFF DATE

	BY	CHECKED
DESIGN	M. Vargas	K. Kelly-Sneed
DETAILS	H. Paige	M. Vargas
QUANTITIES	M. Vargas	K. Kelly-Sneed

PREPARED FOR THE STATE OF CALIFORNIA DEPARTMENT OF TRANSPORTATION

Erik Okada
PROJECT ENGINEER

BRIDGE NO. 28-0100
POST MILES 6.23

RICHMOND-SAN RAFAEL BRIDGE (MODIFY)
SIGN MOUNTING DETAILS NO. 1

DESIGN DETAIL SHEET (ENGLISH) (REV. 03/14/12)

ORIGINAL SCALE IN INCHES FOR REDUCED PLANS 0 1 2 3

UNIT: 0746
PROJECT NUMBER & PHASE: 04140005521 CONTRACT NO.: 04-2J6804

DISREGARD PRINTS BEARING EARLIER REVISION DATES

REVISION DATES

SHEET 3 OF 8

FILE => 082-28-0100-u-miscdt-001.dgn

USERNAME => $USER$ DATE PLOTTED => $DATE$ TIME PLOTTED => $TIME$

DIST	COUNTY	ROUTE	POST MILES TOTAL PROJECT	SHEET No	TOTAL SHEETS
04	CC,Mrn	580	5.0/7.8, 0.0/3.3	563	579

REGISTERED CIVIL ENGINEER 07-14-16 DATE

07-26-16
PLANS APPROVAL DATE

REGISTERED PROFESSIONAL ENGINEER E. OKADA No. S4415 Exp. 6-30-18 STRUCTURAL STATE OF CALIFORNIA

The State of California or its officers or agents shall not be responsible for the accuracy or completeness of scanned copies of this plan sheet.

HNTB CORPORATION
1111 BROADWAY
9TH FLOOR
OAKLAND, CA 94607

BAY AREA TOLL AUTHORITY
375 BEALE STREET, SUITE 800
SAN FRANCISCO, CA 94105

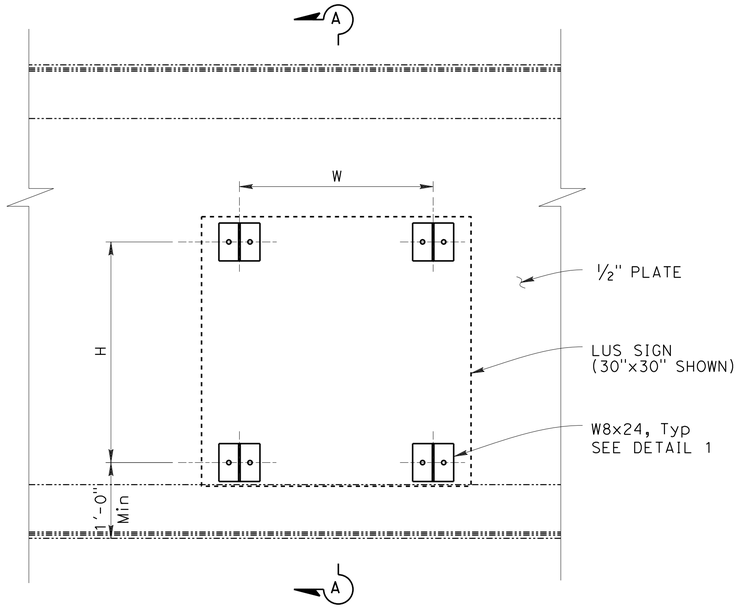

TYPE 1 AND TYPE 2 SIGN SUPPORT

1" = 1'-0"

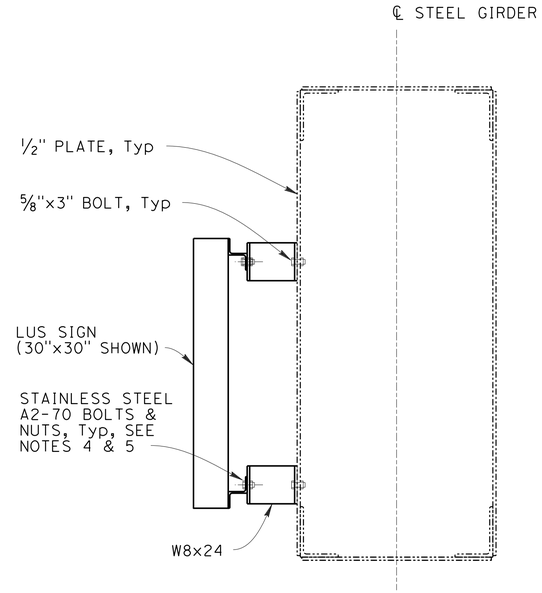

SECTION A-A

1" = 1'-0"

LUS SIGN INSTALLATION SCHEDULE

TYPE	SIZE	H *	W *	1	
TYPE 1	2.5x2.5	~~21.62~~	~~20.00~~	±21"	±20"
TYPE 2	~~3.0x3.5~~ 3.5x3.5	~~34.95~~	~~30.60~~	±31"	±31"

* SEE NOTE 5

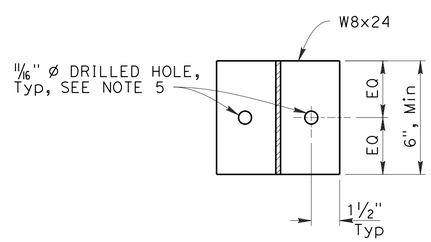

DETAIL 1

3" = 1'-0"

NOTES:

1. The Contractor shall verify all controlling field dimensions before ordering or fabricating any material.
2. Coordinate LUS Sign wiring and mounting per sign manufacturer requirements.
3. Install non-metallic isolation washers between dissimilar metals.
4. Bolts and nuts connecting LUS Sign to Sign Support shall be stainless steel grade A2-70 or as recommended per LUS Sign manufacturer.
5. 1 ~~Detail shows size and location of drilled holes for steel girder side only. Contractor to coordinate with sign manufacturer for drill location and size of holes.~~ Dimensions H and W are the approximate horizontal and vertical spacing of drilled holes on the steel girder side only. Contractor to coordinate and verify locations with actual LUS sign provided by manufacturer.
6. All structural steel to be hot dipped galvanized.

LEGEND:

EXISTING STRUCTURE

NEW CONSTRUCTION

1 **REPLACED PER ADDENDUM No. 1 DATED SEPTEMBER 23, 2016**

DESIGN OVERSIGHT
07-14-16
SIGN OFF DATE

	BY	CHECKED
DESIGN	M. Vargas	K. Kelly-Sneed
DETAILS	H. Li	M. Vargas
QUANTITIES	M. Vargas	K. Kelly-Sneed

PREPARED FOR THE STATE OF CALIFORNIA DEPARTMENT OF TRANSPORTATION

Erik Okada
PROJECT ENGINEER

BRIDGE NO. 28-0100
POST MILE 6.22

RICHMOND-SAN RAFAEL BRIDGE (MODIFY)
SIGN MOUNTING DETAILS NO. 2

DESIGN DETAIL SHEET (ENGLISH) (REV. 06-01-09)

ORIGINAL SCALE IN INCHES FOR REDUCED PLANS 0 1 2 3

UNIT: 0000
PROJECT NUMBER & PHASE: 04150004021 CONTRACT NO.: 04-4J7104

DISREGARD PRINTS BEARING EARLIER REVISION DATES

REVISION DATES

SHEET 4 OF 8

FILE => 083-28-0100-u-miscdt-002.dgn

USERNAME => hulit DATE PLOTTED => 9/23/2016 TIME PLOTTED => 9:50:56 AM

Dist	COUNTY	ROUTE	POST MILES TOTAL PROJECT	SHEET No.	TOTAL SHEETS
04	CC, Mrn	580	5.0/7.8, 0.0/3.2	577	579

LICENSED LANDSCAPE ARCHITECT

7-29-16
PLANS APPROVAL DATE

LICENSED LANDSCAPE ARCHITECT
CALIF. C. HAYGOOD No. 1594
Signature
08-31-17
Renewal Date
7-29-16
Date
STATE OF CALIFORNIA

THE STATE OF CALIFORNIA OR ITS OFFICERS OR AGENTS SHALL NOT BE RESPONSIBLE FOR THE ACCURACY OR COMPLETENESS OF SCANNED COPIES OF THIS PLAN SHEET.

HAYGOOD & ASSOCIATES
LANDSCAPE ARCHITECTS
1496 B SOLANO AVENUE
ALBANY, CA 94706

BAY AREA TOLL AUTHORITY
375 BEALE STREET
SUITE 800
SAN FRANCISCO, CA 94105

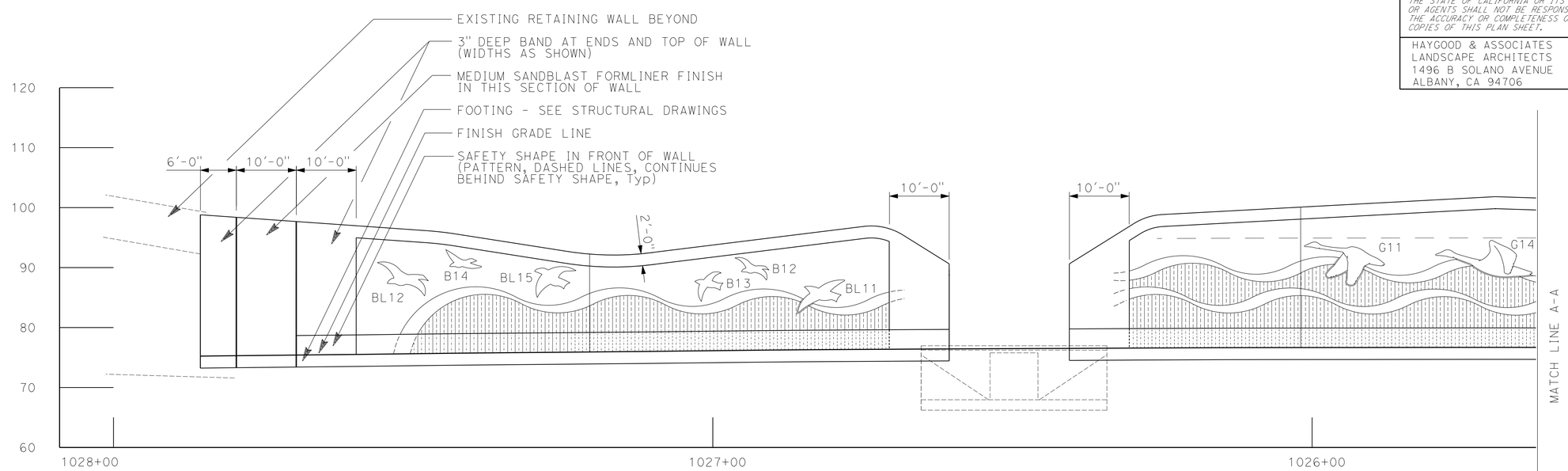

1 ELEVATION: RETAINING WALL 7

1 ELEVATION: RETAINING WALL 4

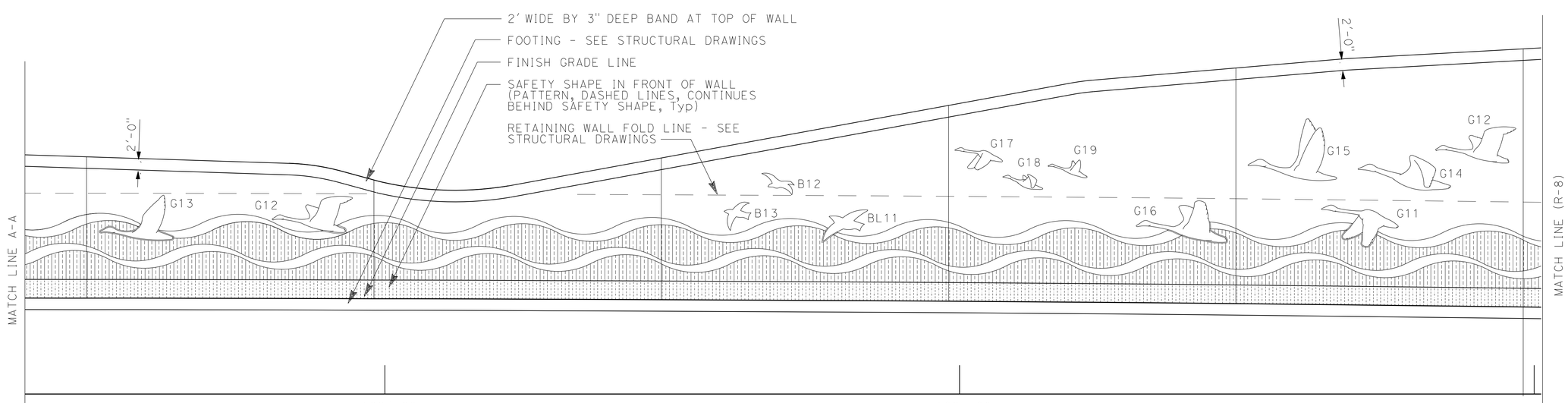

1 ELEVATION: RETAINING WALL 4

1 REPLACED PER ADDENDUM No. 1 DATED SEPTEMBER 23, 2016

RETAINING WALL DETAILS

R-7

STATE OF CALIFORNIA - DEPARTMENT OF TRANSPORTATION
Caltrans®

CONSULTANT SENIOR LANDSCAPE ARCHITECT
LEAH C. HAYGOOD

CALCULATED-DESIGNED BY C. SAITO
CHECKED BY L. HAYGOOD
REVISED BY CS
DATE REVISED 7-29-16
CS 9-2-16

LAST REVISION 9-2-16
DATE PLOTTED => $DATE
TIME PLOTTED => $TIME

Dist	COUNTY	ROUTE	POST MILES TOTAL PROJECT	SHEET No.	TOTAL SHEETS
04	CC, Mrn	580	5.0/7.8, 0.0/3.2	578	579

LICENSED LANDSCAPE ARCHITECT

7-29-16
PLANS APPROVAL DATE

LICENSED LANDSCAPE ARCHITECT
CALIFORNIA - HAYGOOD No. 3594
Signature
08-31-17
Renewal Date
7-29-16
Date
STATE OF CALIFORNIA

THE STATE OF CALIFORNIA OR ITS OFFICERS OR AGENTS SHALL NOT BE RESPONSIBLE FOR THE ACCURACY OR COMPLETENESS OF SCANNED COPIES OF THIS PLAN SHEET.

HAYGOOD & ASSOCIATES
LANDSCAPE ARCHITECTS
1496 B SOLANO AVENUE
ALBANY, CA 94706

BAY AREA TOLL AUTHORITY
375 BEALE STREET
SUITE 800
SAN FRANCISCO, CA 94105

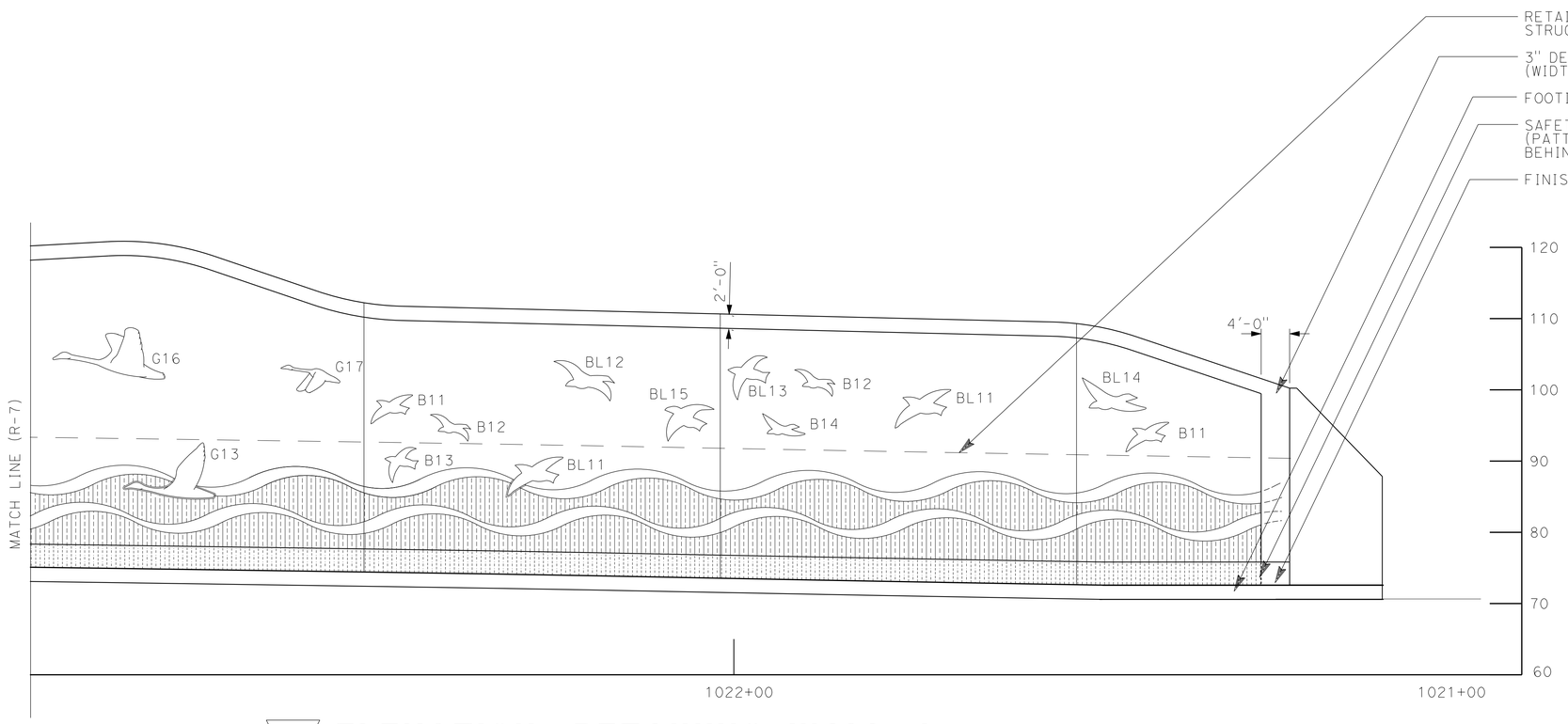

1 ELEVATION: RETAINING WALL 4

1 REPLACED PER ADDENDUM No. 1 DATED SEPTEMBER 23, 2016

RETAINING WALL DETAILS

R-8

STATE OF CALIFORNIA - DEPARTMENT OF TRANSPORTATION
Caltrans

CONSULTANT SENIOR LANDSCAPE ARCHITECT: LEAH C. HAYGOOD

CALCULATED-DESIGNED BY: C. SAITO
CHECKED BY: L. HAYGOOD

REVISED BY: CS, CS, CS
DATE REVISED: 9-2-16, 7-29-16

LAST REVISION 9-2-16
DATE PLOTTED => $DATE
TIME PLOTTED => $TIME