Dist	COUNTY	ROUTE	POST MILES TOTAL PROJECT	SHEET No.	TOTAL SHEETS
04	CC/Mrn	580	5.0/7.8, 0.0/3.3	487	579

REGISTERED CIVIL ENGINEER

July 15, 2016

PLANS APPROVAL DATE

REGISTERED PROFESSIONAL ENGINEER Stanley P. Johnson No. C57793 Exp. 3-31-18 CIVIL STATE OF CALIFORNIA

THE STATE OF CALIFORNIA OR ITS OFFICERS OR AGENTS SHALL NOT BE RESPONSIBLE FOR THE ACCURACY OR COMPLETENESS OF SCANNED COPIES OF THIS PLAN SHEET.

TO ACCOMPANY PLANS DATED _____

NOTE:

Handhole shall be located on the downstream side of traffic.

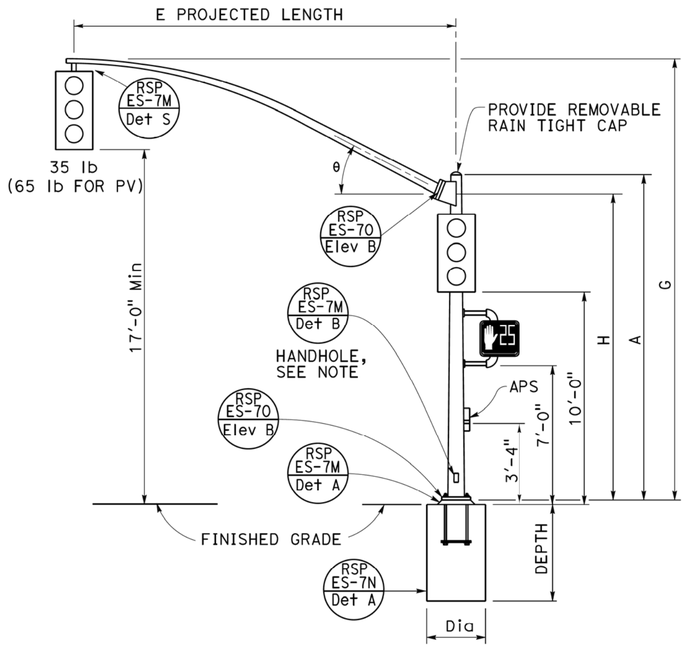

TYPE 16-1-100, 18-1-100

ELEVATION A

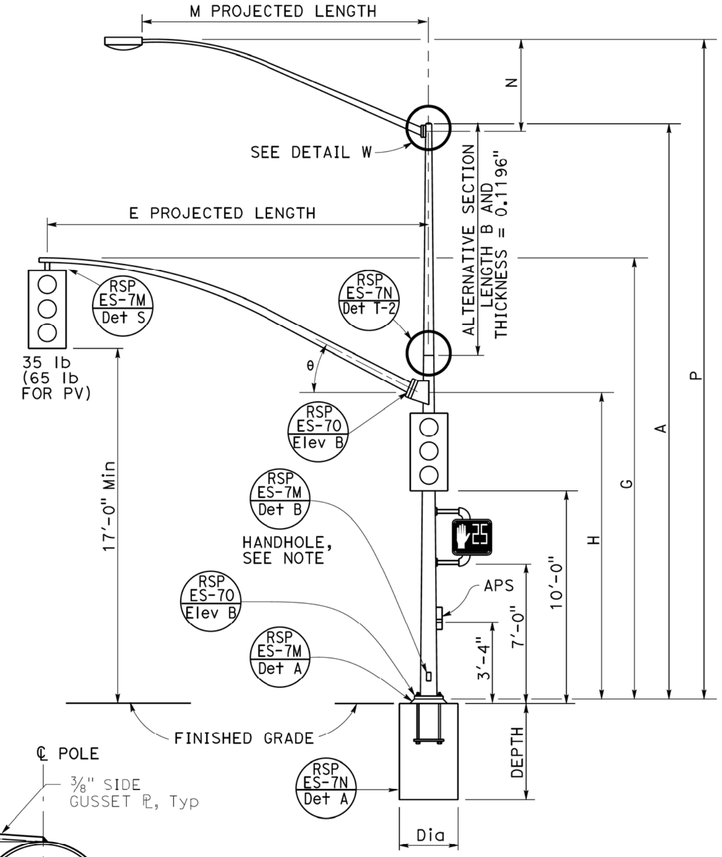

TYPE 19-1-100, 19A-1-100

ELEVATION B

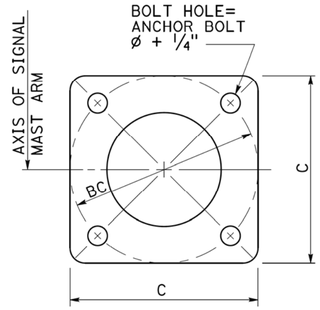

DETAIL D

BASE PLATE

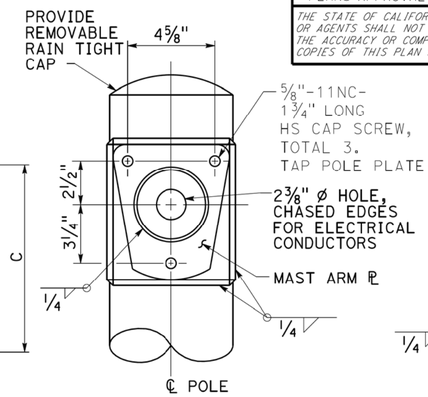

DETAIL W-1

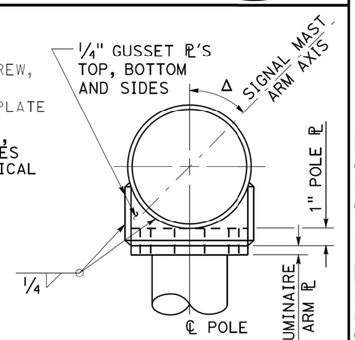

DETAIL W-2

LUMINAIRE MAST ARM CONNECTION

DETAIL W

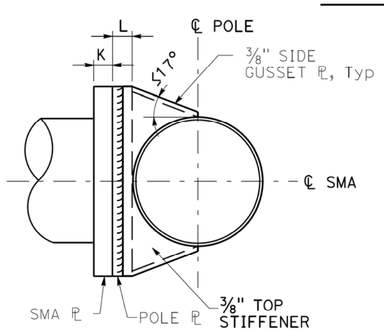

SECTION B-B

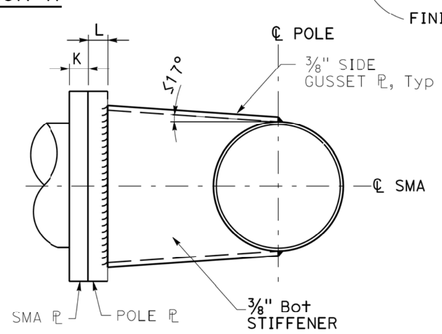

SECTION C-C

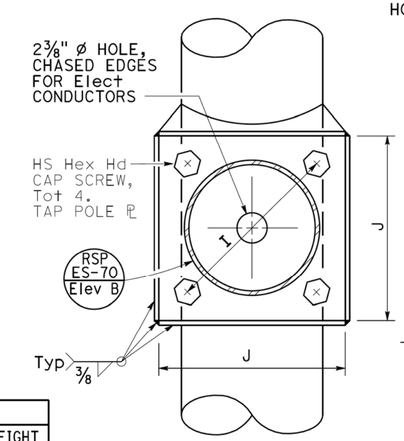

SECTION A-A

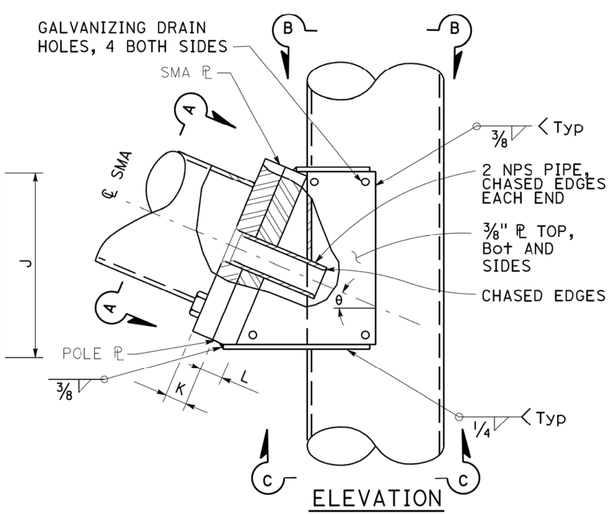

ELEVATION

SIGNAL MAST ARM CONNECTION

DETAIL A

SIGNAL MAST ARM DATA										
E PROJECTED LENGTH	G MOUNTING HEIGHT	H	Min OD AT POLE	THICKNESS	I BOLT CIRCLE	HS CAP SCREWS	J PLATE SIZE	K MAST ARM ℄ THICKNESS	L POLE ℄ THICKNESS	θ
15'-0"	21'-8"±	17'-6"	7 3/8"	0.1793"	12"	1 1/4"-7NC-3"	1'-0"	1 1/4"	1 1/2"	23°
20'-0"			8"				1'-1"			
25'-0"	22'-8"±	16'-0"	9"							
30'-0"	23'-0"±		10"							

LUMINAIRE MAST ARM DATA					
M PROJECTED LENGTH	N RISE	Min OD AT POLE	THICKNESS	P MOUNTING HEIGHT 30'-0" POLE	P MOUNTING HEIGHT 35'-0" POLE
6'-0"	2'-0"±	3 1/4"	0.1196"	31'-6"±	36'-6"±
8'-0"	2'-6"±	3 1/2"		32'-0"±	37'-0"±
10'-0"	3'-3"±	3 7/8"		32'-9"±	37'-9"±
12'-0"	4'-3"±			33'-9"±	38'-9"±
15'-0"	4'-9"±	4 1/4"		34'-3"±	39'-3"±

POLE TYPE	LOAD CASE	WIND VELOCITY (mph)	POLE DATA A HEIGHT	Min OD BASE	Min OD TOP	THICKNESS	ALTERNATIVE SECTION B LENGTH	BOTTOM	TOP	BASE PLATE DATA C	BC = BOLT CIRCLE	THICKNESS	ANCHOR BOLT SIZE	LUMINAIRE MAST ARM	SIGNAL MAST ARM	CIDH PILE FOUNDATION Dia	DEPTH
16-1-100	1	100	18'-6"	12"	9 3/8"	0.2391" OR 0.25"	None			1'-6"	1'-4"	2"	1 3/4"Ø x 42"	NONE	15'-0", [20'-0"]	3'-0"	9'-0"
18-1-100			17'-0"				None							NONE			
19-1-100			30'-0"	14"	9 3/4"		10'-0"	11 1/8"	9 3/4"	1'-10"	1'-8"	2 1/2"	2"Ø x 42"	6'-15' [12'-0"]	25'-0", [30'-0"]	3'-6"	10'-0"
19A-1-100			35'-0"		9"		15'-0"		9"					6'-15' [15'-0"]			

[ ] INDICATES MAST ARM LENGTH TO BE USED UNLESS OTHERWISE NOTED ON PLANS.

STATE OF CALIFORNIA
DEPARTMENT OF TRANSPORTATION

ELECTRICAL SYSTEMS (SIGNAL AND LIGHTING STANDARD, CASE 1 SIGNAL MAST ARM LOADING, WIND VELOCITY = 100 MPH AND SIGNAL MAST ARM LENGTHS 15' TO 30')

NO SCALE

RSP ES-7C DATED JULY 15, 2016 SUPERSEDES RSP ES-7C DATED OCTOBER 30, 2015 AND RSP ES-7C DATED JULY 19, 2013 AND STANDARD PLAN ES-7C DATED MAY 20, 2011 - PAGE 464 OF THE STANDARD PLANS BOOK DATED 2010.

REVISED STANDARD PLAN RSP ES-7C

2010 REVISED STANDARD PLAN RSP ES-7C

6-20-16

Dist	COUNTY	ROUTE	POST MILES TOTAL PROJECT	SHEET No.	TOTAL SHEETS
04	CC/Mrn	580	5.0/7.8, 0.0/3.3	488	579

REGISTERED CIVIL ENGINEER

July 15, 2016
PLANS APPROVAL DATE

REGISTERED PROFESSIONAL ENGINEER Stanley P. Johnson No. C57793 Exp. 3-31-18 CIVIL STATE OF CALIFORNIA

THE STATE OF CALIFORNIA OR ITS OFFICERS OR AGENTS SHALL NOT BE RESPONSIBLE FOR THE ACCURACY OR COMPLETENESS OF SCANNED COPIES OF THIS PLAN SHEET.

TO ACCOMPANY PLANS DATED _____

NOTE:
Handhole shall be located on the downstream side of traffic.

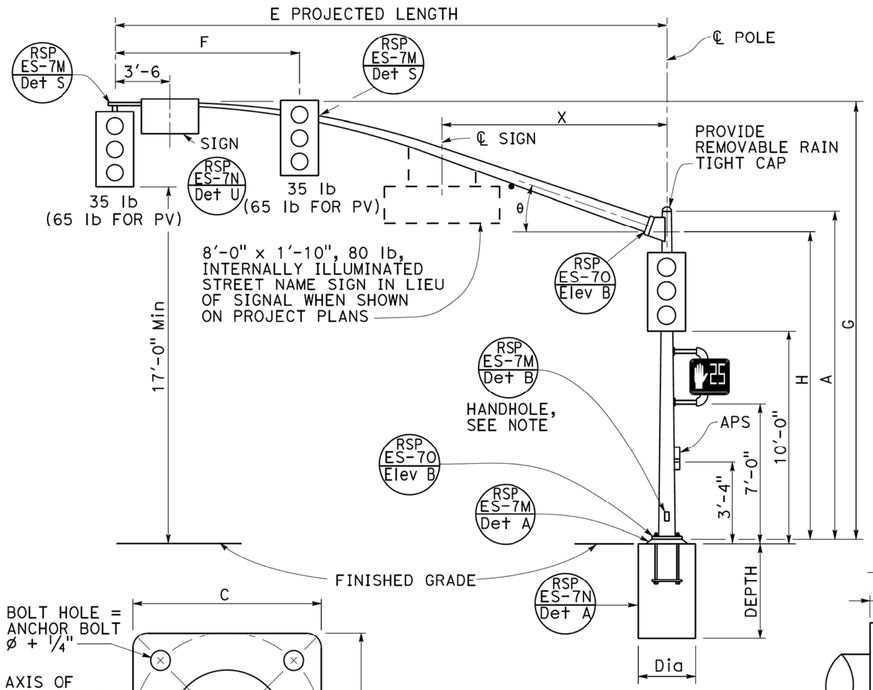

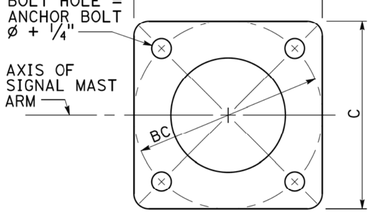

BASE PLATE
DETAIL B

TYPE 16-3-100, 18-3-100, 23-3-100, 27-3-100
ELEVATION A

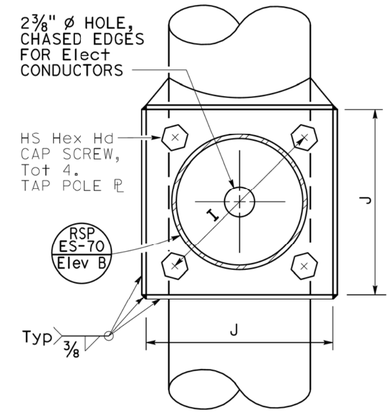

SECTION A-A

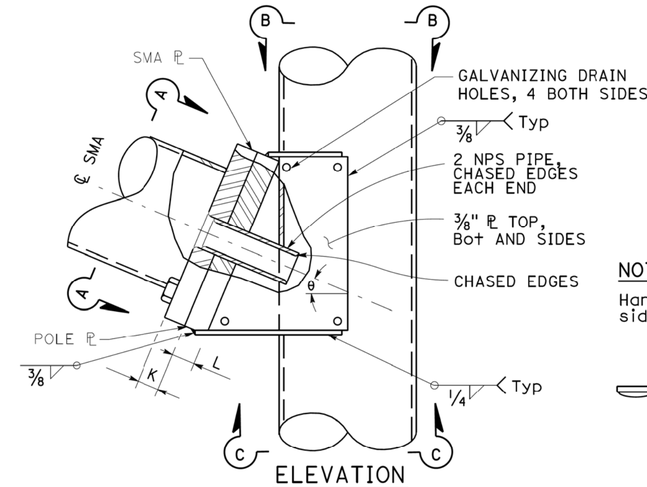

ELEVATION

SIGNAL MAST ARM CONNECTION
DETAIL A

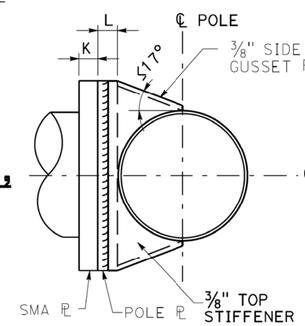

SECTION B-B

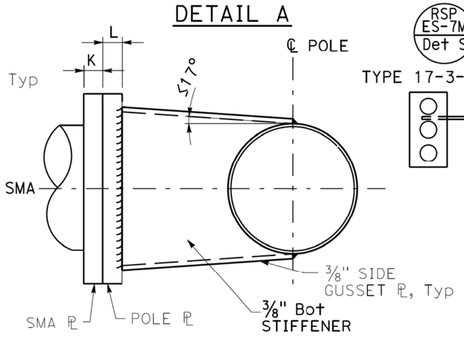

SECTION C-C

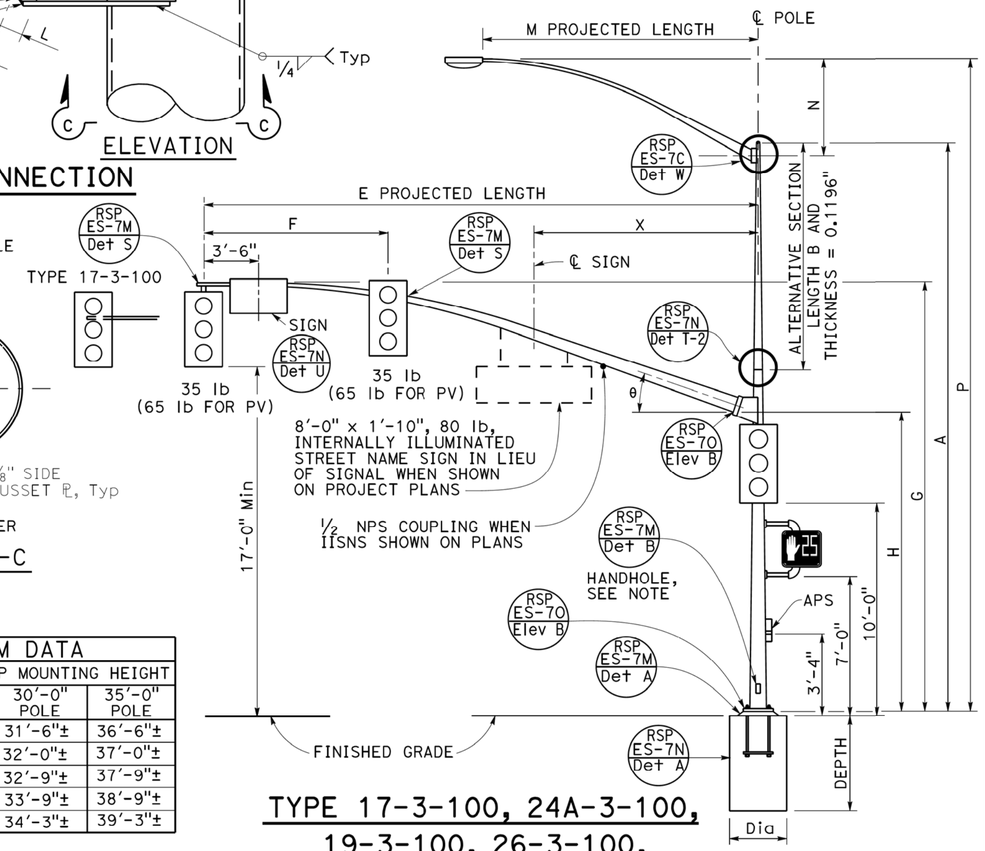

TYPE 17-3-100, 24A-3-100, 19-3-100, 26-3-100, 19A-3-100, 26A-3-100, 24-3-100
ELEVATION B

SIGNAL MAST ARM DATA

E PROJECTED LENGTH	F Min SPACING	G MOUNTING HEIGHT	H	Min OD AT POLE	THICKNESS	I BOLT CIRCLE	HS CAP SCREWS	J PLATE SIZE	K MAST ARM ℙ THICKNESS	L POLE ℙ THICKNESS	θ	X Max
15'-0"	8'-0"	21'-8"±	17'-6"	7 3/8"	0.1793"	12"	1 1/4"-7NC-3"	1'-3"	1 1/4"	1 1/2"	23°	-
20'-0"		21'-8"±		7 3/8"								
25'-0"	12'-0"	22'-8"±	16'-0"	7 3/8"	0.2391"							10'-6"
30'-0"		23'-0"±		8"								
35'-0"	14'-0"			8 3/4"		13"			1 1/2"	1 3/4"	21°	
40'-0"	15'-0"			9 3/8"							15°	13'-0"
45'-0"		23'-8"±		10 1/16"				1'-5"				

LUMINAIRE MAST ARM DATA

M PROJECTED LENGTH	N RISE	Min OD AT POLE	THICKNESS	P MOUNTING HEIGHT 30'-0" POLE	P MOUNTING HEIGHT 35'-0" POLE
6'-0"	2'-0"±	3 1/4"	0.1196"	31'-6"±	36'-6"±
8'-0"	2'-6"±	3 1/2"		32'-0"±	37'-0"±
10'-0"	3'-3"±	3 7/8"		32'-9"±	37'-9"±
12'-0"	4'-3"±			33'-9"±	38'-9"±
15'-0"	4'-9"±	4 1/4"		34'-3"±	39'-3"±

POLE DATA / BASE PLATE DATA / CIDH PILE FOUNDATION

POLE TYPE	LOAD CASE	WIND VELOCITY (mph)	A HEIGHT	Min OD BASE	Min OD TOP	THICKNESS	ALTERNATIVE SECTION B LENGTH	ALTERNATIVE SECTION BOTTOM	ALTERNATIVE SECTION TOP	C	BC = BOLT CIRCLE	THICKNESS	ANCHOR BOLT SIZE	LUMINAIRE MAST ARM	SIGNAL MAST ARM	CIDH PILE FOUNDATION Dia	CIDH PILE FOUNDATION DEPTH
16-3-100	3	100	18'-6"	16"	13 3/8"	0.2391" OR 0.25"				1'-11"	1'-9"	3"	2 1/4" ø x 42"	NONE	15'-0", 20'-0"	3'-6"	12'-0"
17-3-100			30'-0"		11 3/4"		10'-0"	13 1/8"	11 3/4"					6'-15' 12'-0"			
18-3-100			17'-0"		13 5/8"									NONE	25'-0", 30'-0"		
19-3-100			30'-0"		11 3/4"		10'-0"	13 1/8"	11 3/4"					6'-15' 12'-0"			
19A-3-100			35'-0"		11"	0.3125"	15'-0"		11"					6'-15' 15'-0"			
23-3-100			17'-0"		13 5/8"	0.2391" OR 0.25"								NONE	35'-0"		
24-3-100			30'-0"		11 3/4"	0.3125"	10'-0"	13 1/8"	11 3/4"					6'-15' 12'-0"			
24A-3-100			35'-0"		11"		15'-0"		11"					6'-15' 15'-0"			
26-3-100			30'-0"	18"	13 3/4"		10'-0"	15 1/8"	13 3/4"	2'-1"	1'-11"			6'-15' 12'-0"	40'-0", 45'-0"		13'-0"
26A-3-100			35'-0"		13"		15'-0"		13"					6'-15' 15'-0"			
27-3-100			17'-0"		15 5/8"									NONE			

☐ INDICATES MAST ARM LENGTH TO BE USED UNLESS OTHERWISE NOTED ON PLANS.

STATE OF CALIFORNIA
DEPARTMENT OF TRANSPORTATION

ELECTRICAL SYSTEMS (SIGNAL AND LIGHTING STANDARD, CASE 3 SIGNAL MAST ARM LOADING, WIND VELOCITY=100 MPH AND SIGNAL MAST ARM LENGTHS 15' TO 45')

NO SCALE

RSP ES-7E DATED JULY 15, 2016 SUPERSEDES RSP ES-7E DATED OCTOBER 30, 2015 AND RSP ES-7E DATED JULY 19, 2013 AND STANDARD PLAN ES-7E DATED MAY 20, 2011 - PAGE 466 OF THE STANDARD PLANS BOOK DATED 2010.

REVISED STANDARD PLAN RSP ES-7E

2010 REVISED STANDARD PLAN RSP ES-7E

6-20-16

Dist	COUNTY	ROUTE	POST MILES TOTAL PROJECT	SHEET No.	TOTAL SHEETS
04	CC/Mrn	580	5.0/7.8, 0.0/3.3	489	579

REGISTERED CIVIL ENGINEER

July 15, 2016

PLANS APPROVAL DATE

REGISTERED PROFESSIONAL ENGINEER Stanley P. Johnson No. C57793 Exp. 3-31-18 CIVIL STATE OF CALIFORNIA

THE STATE OF CALIFORNIA OR ITS OFFICERS OR AGENTS SHALL NOT BE RESPONSIBLE FOR THE ACCURACY OR COMPLETENESS OF SCANNED COPIES OF THIS PLAN SHEET.

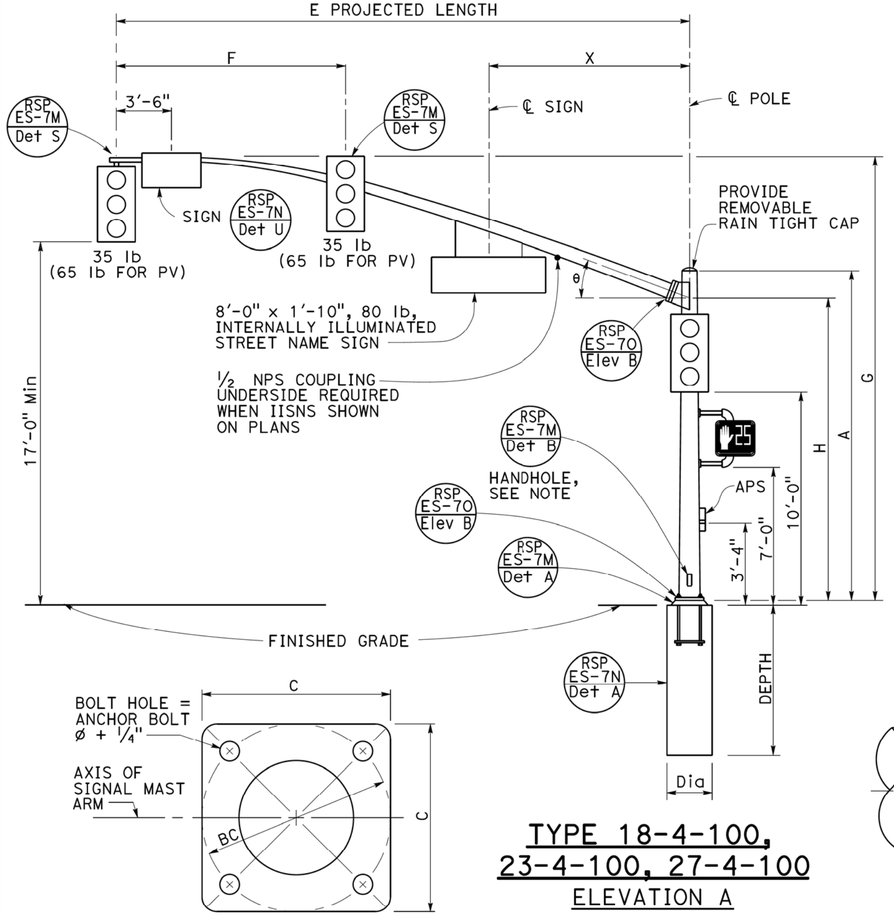

BASE PLATE
DETAIL B

TYPE 18-4-100, 23-4-100, 27-4-100
ELEVATION A

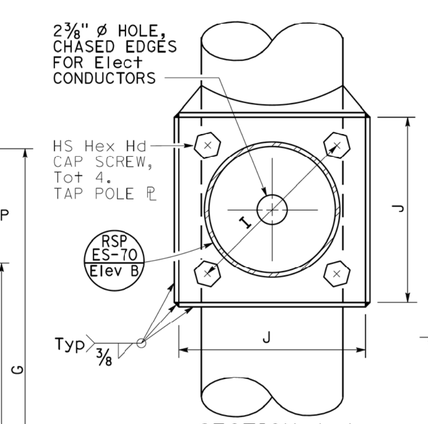

SECTION A-A

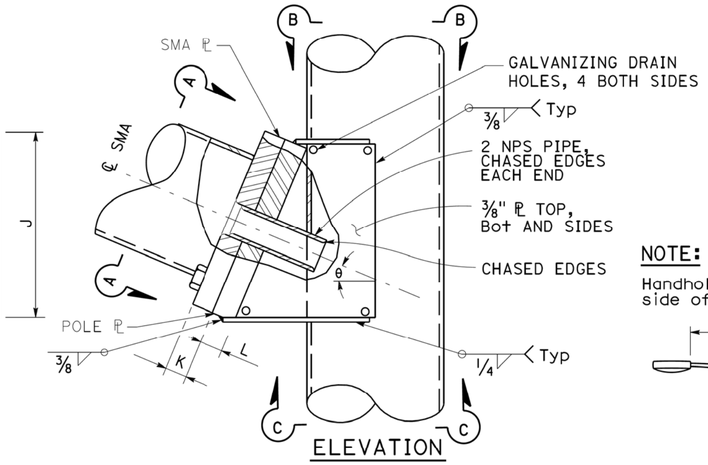

ELEVATION

SIGNAL MAST ARM CONNECTION
DETAIL A

NOTE: TO ACCOMPANY PLANS DATED _____

Handhole shall be located on the downstream side of traffic.

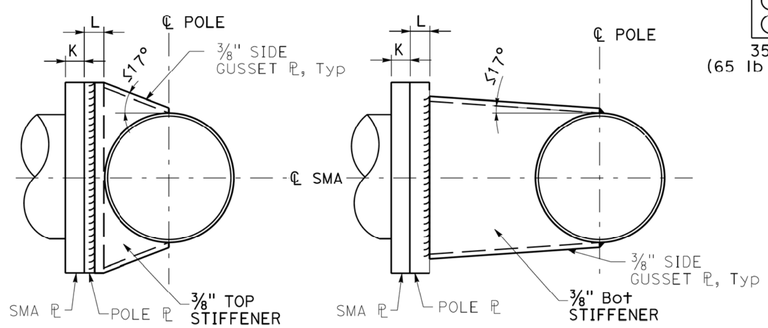

SECTION B-B

SECTION C-C

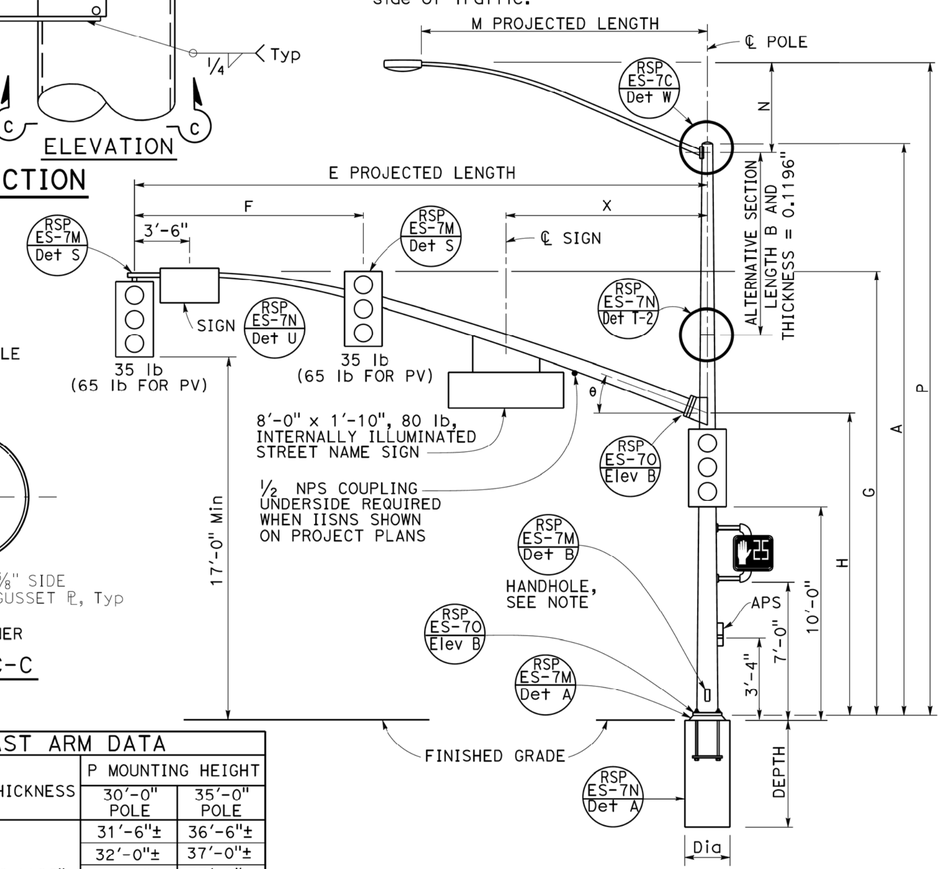

TYPE 19-4-100, 19A-4-100, 24-4-100, 24A-4-100, 26-4-100, 26A-4-100
ELEVATION B

SIGNAL MAST ARM DATA												
E PROJECTED LENGTH	F Min SPACING	G MOUNTING HEIGHT	H	Min OD AT POLE	THICKNESS	I BOLT CIRCLE	HS CAP SCREWS	J PLATE SIZE	K MAST ARM ℙ THICKNESS	L POLE ℙ THICKNESS	θ	X Max
25'-0"	10'-0"	22'-8"±	16'-0"	7⅜"	0.2391"	12"	1¼"-7NC-3"	1'-3"	1¼"	1½"	23°	10'-6"
30'-0"	12'-0"	23'-0"±		8"								
35'-0"	14'-0"			8 11/16"		13½"			1½"	1¾"	21°	
40'-0"	15'-0"			9⅜"							15°	13'-0"
45'-0"		23'-8"±		10¼"				1'-5"				

LUMINAIRE MAST ARM DATA					
M PROJECTED LENGTH	N RISE	Min OD AT POLE	THICKNESS	P MOUNTING HEIGHT 30'-0" POLE	P MOUNTING HEIGHT 35'-0" POLE
6'-0"	2'-0"±	3¼"	0.1196"	31'-6"±	36'-6"±
8'-0"	2'-6"±	3½"		32'-0"±	37'-0"±
10'-0"	3'-3"±	3⅞"		32'-9"±	37'-9"±
12'-0"	4'-3"±			33'-9"±	38'-9"±
15'-0"	4'-9"±	4¼"		34'-3"±	39'-3"±

POLE TYPE	LOAD CASE	WIND VELOCITY (mph)	POLE DATA A HEIGHT	Min OD BASE	Min OD TOP	THICKNESS	ALTERNATIVE SECTION B LENGTH	BOTTOM	TOP	BASE PLATE DATA C	BC = BOLT CIRCLE	THICKNESS	ANCHOR BOLT SIZE	LUMINAIRE MAST ARM	SIGNAL MAST ARM	CIDH PILE FOUNDATION Dia	DEPTH
18-4-100	4	100	17'-0"	16"	13⅝"	0.2391" OR 0.25"				1'-11"	1'-9"	3"	2¼"ø x 42"	NONE	25'-0", 30'-0"	3'-6"	12'-0"
19-4-100			30'-0"		11¾"		10'-0"	13⅛"	11¾"					6'-15' 12'-0"			
19A-4-100			35'-0"		11"	0.3125"	15'-0'	13⅛"	11"					6'-15' 15'-0"			
23-4-100			17'-0"		13⅝"									NONE	35'-0"		
24-4-100			30'-0"		11¾"		10'-0"	15⅛"	13¾"					6'-15' 12'-0"			
24A-4-100			35'-0"		11"		15'-0"	13⅛"	11"					6'-15' 15'-0"			
26-4-100			30'-0"	18"	13¾"		10'-0"	15⅛"	13¾"	2'-1"	1'-11"			6'-15' 12'-0"	40'-0", 45'-0"		13'-0"
26A-4-100			35'-0"		13"		15'-0"	15⅛"	13"					6'-15' 15'-0"			
27-4-100			17'-0"		15⅝"									NONE			

☐ INDICATES MAST ARM LENGTH TO BE USED UNLESS OTHERWISE NOTED ON PLANS.

STATE OF CALIFORNIA
DEPARTMENT OF TRANSPORTATION

ELECTRICAL SYSTEMS (SIGNAL AND LIGHTING STANDARD, CASE 4 SIGNAL MAST ARM LOADING, WIND VELOCITY=100 MPH AND SIGNAL MAST ARM LENGTHS 25' TO 45')

NO SCALE

RSP ES-7F DATED JULY 15, 2016 SUPERSEDES RSP ES-7F DATED OCTOBER 30, 2015 AND RSP ES-7F DATED JULY 19, 2013 AND STANDARD PLAN ES-7F DATED MAY 20, 2011 - PAGE 467 OF THE STANDARD PLANS BOOK DATED 2010.

REVISED STANDARD PLAN RSP ES-7F

2010 REVISED STANDARD PLAN RSP ES-7F

6-20-16

Dist	COUNTY	ROUTE	POST MILES TOTAL PROJECT	SHEET No.	TOTAL SHEETS
04	CC/Mrn	580	5.0/7.8, 0.0/3.3	490	579

REGISTERED CIVIL ENGINEER

July 15, 2016
PLANS APPROVAL DATE

REGISTERED PROFESSIONAL ENGINEER Stanley P. Johnson No. C57793 Exp. 3-31-18 CIVIL STATE OF CALIFORNIA

THE STATE OF CALIFORNIA OR ITS OFFICERS OR AGENTS SHALL NOT BE RESPONSIBLE FOR THE ACCURACY OR COMPLETENESS OF SCANNED COPIES OF THIS PLAN SHEET.

TO ACCOMPANY PLANS DATED _____

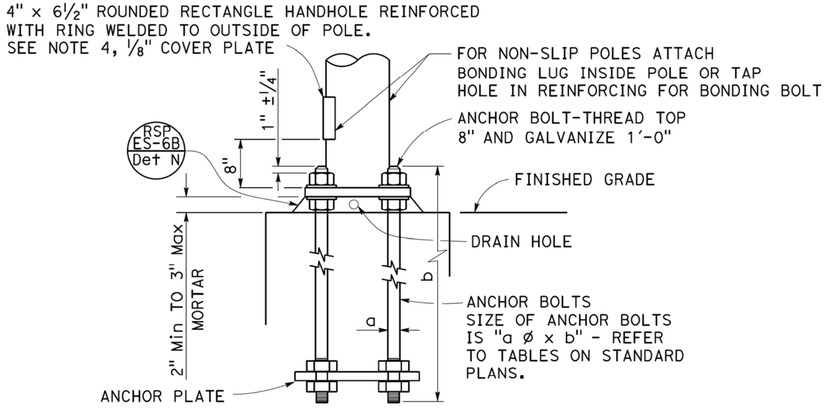

HANDHOLE AND ANCHORAGE
DETAIL A

IDENTIFICATION NUMBER

1. Attach a stamped metal tag with pole's identification number above the handhole. ¼" high number, minimum.
2. Attach a stamped metal tag with mast arm's identification number to the bottom of the signal mast arm near the pole plate. ¼" high number, minimum.

Type
Load case (Use SL for special load case)
Design wind velocity (mph)
Signal mast arm length (ft) — Near handhole: Maximum signal mast arm length for pole type; Near pole plate: Installed signal mast arm length
Standard plan year
Only for poles or mast arms using Detail F
Only for poles or mast arms using RSP ES-7O

26A - 3 - 100 - 45 - 10 - F or FB

SAMPLE IDENTIFICATION NUMBER

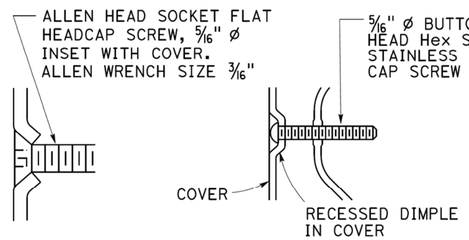

TYPICAL DETAIL
DETAIL B-1

ALTERNATIVE DETAIL
DETAIL B-2

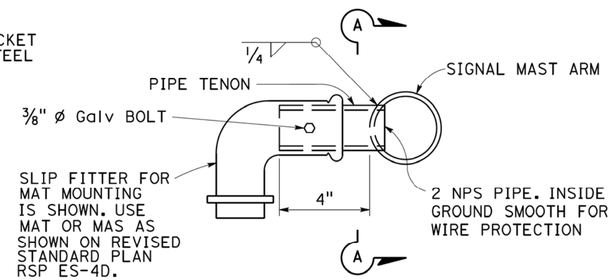

SIDE TENON
DETAIL S-1

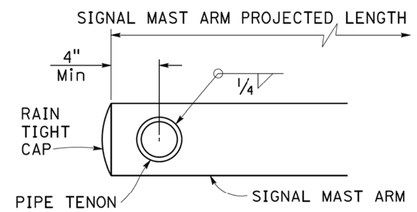

SECTION A-A

PIPE TENONS
DETAIL S

NOTES:

1. Provide a Hex nut, leveling nut and 2 washers for each bolt.
2. Luminaire mast arms shall be round, tapered steel tubes, taper of 0.1375" to 0.143-inch per foot with an end section 2⅜" OD for mounting hardware. Extensions of 2 NPS Standard pipe and 7" long may be used at the option of the manufacturer. When low pressure sodium luminaires are required, the extension shall be 1'-3".
3. Signal mast arms shall be round, tapered steel tubes, maximum taper 0.143-inch per foot.
4. Handhole reinforcement ring shall be ¼" x 2" for 0.1196" to 0.2391" thick poles, ⅜" x 2" for 0.3125" to 0.375" thick poles.
5. Handholes shall be located on the downstream side of traffic.
6. Detail F, fatigue resistant weld, is required at socket welded signal mast arm plate and pole base plate.
7. Cap screws shall be tightened by the turn-of-nut method ⅓ turn from a snug tight condition. No washer will be required.
8. Outside diameter, wall thickness, and corresponding section properties of poles and mast arms as shown in the Standard Plans are minimums. Unless otherwise specified, alternative sections shall require approval by the Engineer.
9. Design: AASHTO Standard Specifications for Structural Support for Highway Signs, Luminaires, and Traffic Signals, 6th Edition. Basic Wind Speed = 100 mph (3 seconds gust). Yearly Mean Wind Velocity = 15.6 mph.
10. Materials (Structural steel):
    fy = 55,000 psi (tapered steel tube and anchor bolts)
    fy = 50,000 psi (unless otherwise noted)
11. Materials (Reinforced concrete):
    f'c = 3,625 psi
    fy = 60,000 psi

WELD SIZE	WALL THICKNESS
3/16"	0.1196"
¼"	0.1793"
5/16"	0.2391"
⅜"	0.3125"
7/16"	0.375"

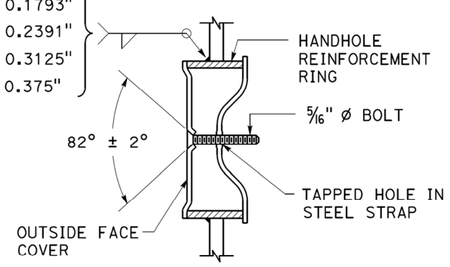

TAMPER RESISTANT HANDHOLE COVER
DETAIL B

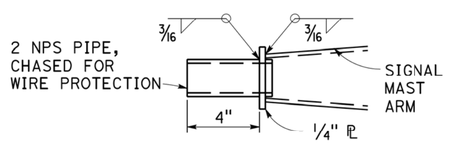

TIP TENON
DETAIL TL
This detail supersedes Detail S when so designated

WELD SIZE	WALL THICKNESS
⅛"	0.1196"
3/16"	0.1793"
¼"	0.2391"

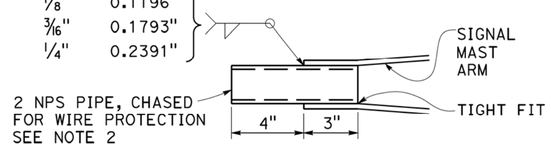

TIP TENON
DETAIL TS

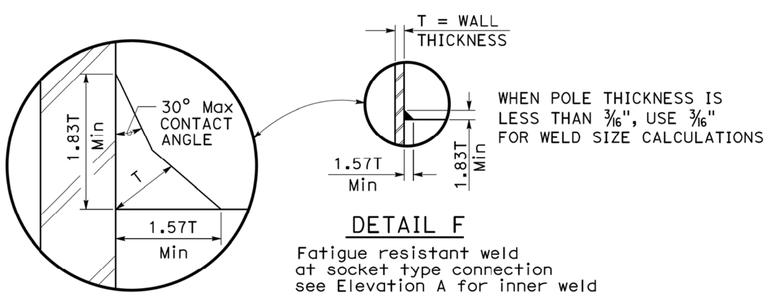

DETAIL F
Fatigue resistant weld at socket type connection see Elevation A for inner weld

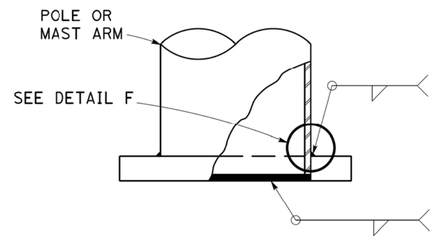

WELD SIZE	WALL THICKNESS
¼"	0.1196"
5/16"	0.1793"
⅜"	0.2391"
7/16"	0.3125"

⅛"	0.1196"
3/16"	0.1793"
¼"	0.2391"
5/16"	0.3125"

ELEVATION A

STATE OF CALIFORNIA
DEPARTMENT OF TRANSPORTATION

ELECTRICAL SYSTEMS (SIGNAL AND LIGHTING STANDARD, DETAIL No. 1)

NO SCALE

RSP ES-7M DATED JULY 15, 2016 SUPERSEDES RSP ES-7M DATED OCTOBER 30, 2015 AND STANDARD PLAN ES-7M DATED MAY 20, 2011 - PAGE 474 OF THE STANDARD PLANS BOOK DATED 2010.

REVISED STANDARD PLAN RSP ES-7M

2010 REVISED STANDARD PLAN RSP ES-7M

6-20-16

Dist	COUNTY	ROUTE	POST MILES TOTAL PROJECT	SHEET No.	TOTAL SHEETS
04	CC/Mrn	580	5.0/7.8, 0.0/3.3	491	579

REGISTERED CIVIL ENGINEER

July 15, 2016
PLANS APPROVAL DATE

REGISTERED PROFESSIONAL ENGINEER Stanley P. Johnson No. C57793 Exp. 3-31-18 CIVIL STATE OF CALIFORNIA

THE STATE OF CALIFORNIA OR ITS OFFICERS OR AGENTS SHALL NOT BE RESPONSIBLE FOR THE ACCURACY OR COMPLETENESS OF SCANNED COPIES OF THIS PLAN SHEET.

TO ACCOMPANY PLANS DATED _____

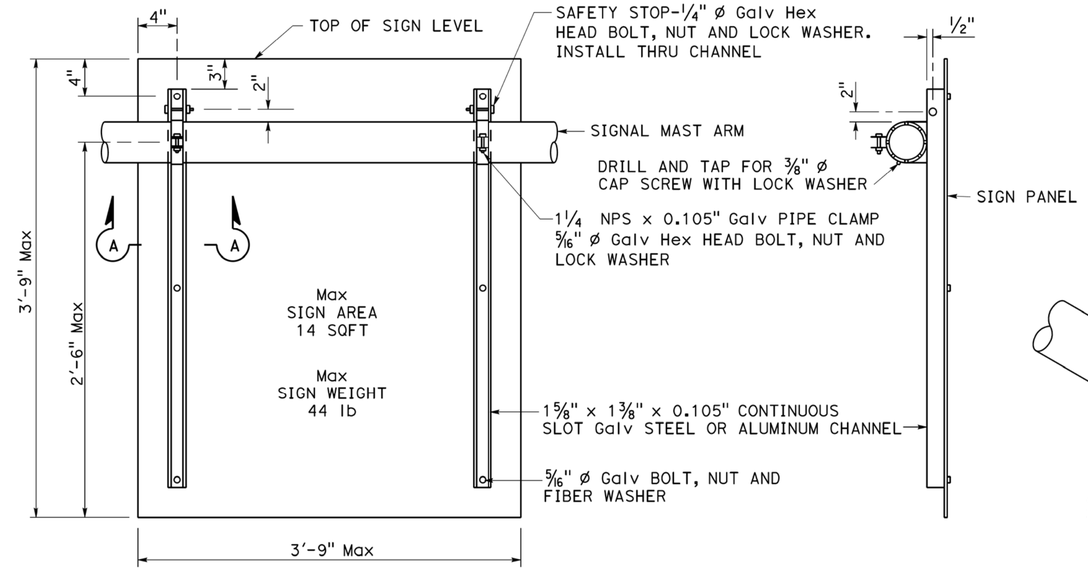

REAR VIEW

SIDE VIEW

SIGN MOUNTING DETAILS
DETAIL U

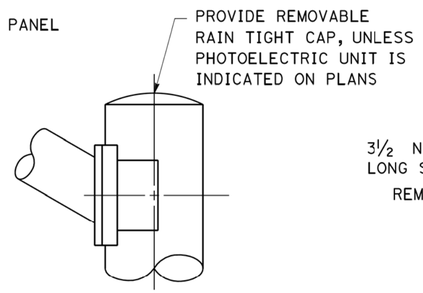

STANDARD TOP
DETAIL B-1

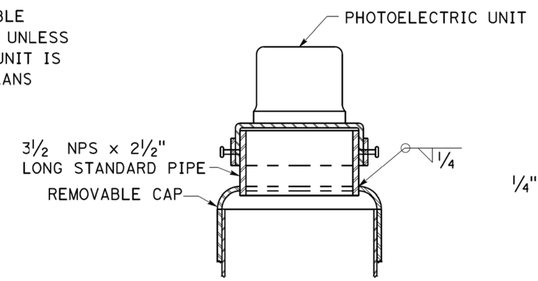

MOUNTING ADAPTER FOR
PHOTOELECTRIC UNIT
DETAIL B-2

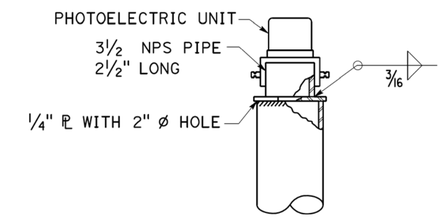

ALTERNATIVE
MOUNTING ADAPTER
DETAIL B-3

POLE TOP DETAILS
DETAIL B

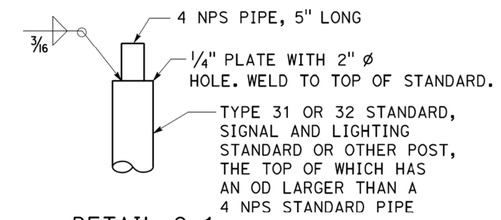

DETAIL C-1

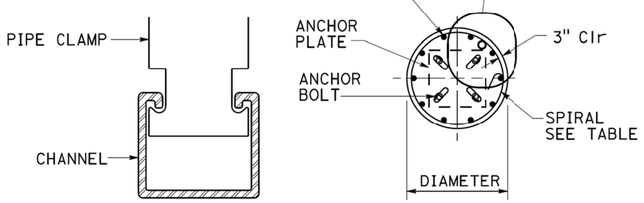

SECTION A-A

SECTION B-B

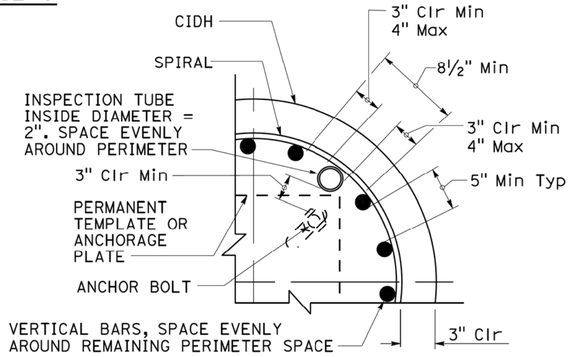

INSPECTION TUBE PLACEMENT
DETAIL I

CIDH REINFORCING AND INSPECTION TUBE SCHEDULE			
CIDH DIAMETER	VERTICAL BARS	SPIRAL	INSPECTION TUBE
2 ft	8-#5	#4 AT 6	2
2.5 ft	10-#6		4*
3 ft	12-#7	#5 AT 6	
3.5 ft	14-#8		4
4 ft	18-#9	2-#4 AT 7	5
4.5 ft	18-#9	2-#5 AT 7	5
5 ft	22-#10	2-#5 AT 7	6
6 ft	26-#11	2-#6 AT 7	7

* FOR SLIP BASE VERSIONS WITH 3 ANCHOR BOLTS USE 3 INSPECTION TUBES.

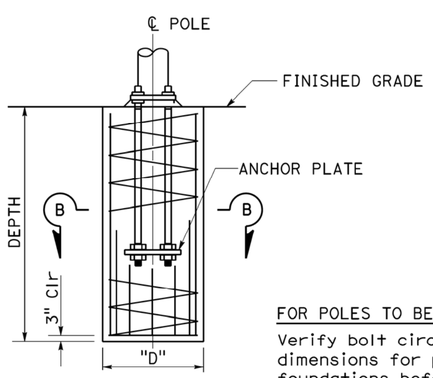

ELEVATION

FOR POLES TO BE INSTALLED ON EXISTING FOUNDATION:
Verify bolt circles, anchor bolt sizes and dependent dimensions for poles to be installed on existing foundations before fabricating the poles.

CAST-IN-DRILLED-HOLE PILE FOUNDATION, REINFORCED PILE
DETAIL A

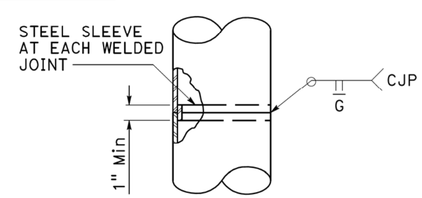

FOR UNIFORM TUBE THICKNESS
DETAIL T-1

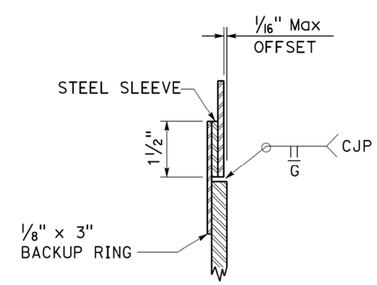

AT TUBE THICKNESS CHANGE
DETAIL T-2

POLE SPLICES
DETAIL T

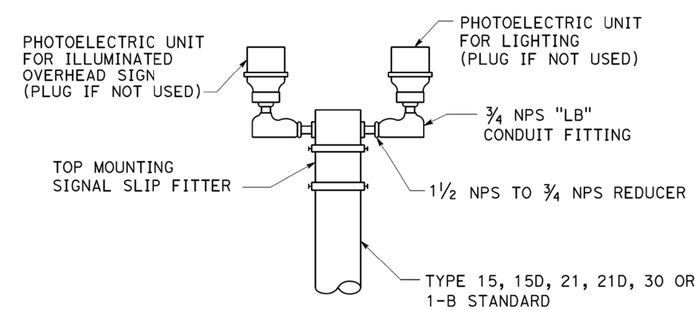

DETAIL C-2

DUAL PHOTOELECTRIC UNIT MOUNTING DETAIL
DETAIL C

STATE OF CALIFORNIA
DEPARTMENT OF TRANSPORTATION

ELECTRICAL SYSTEMS (SIGNAL AND LIGHTING STANDARD, DETAIL No. 2)

NO SCALE

RSP ES-7N DATED JULY 15, 2016 SUPERSEDES RSP ES-7N DATED OCTOBER 30, 2015 AND STANDARD PLAN ES-7N DATED MAY 20, 2011 - PAGE 475 OF THE STANDARD PLANS BOOK DATED 2010.

REVISED STANDARD PLAN RSP ES-7N

2010 REVISED STANDARD PLAN RSP ES-7N

6-20-16

Dist	COUNTY	ROUTE	POST MILES TOTAL PROJECT	SHEET No.	TOTAL SHEETS
04	CC/Mrn	580	5.0/7.8, 0.0/3.3	492	579

REGISTERED CIVIL ENGINEER

October 30, 2015
PLANS APPROVAL DATE

REGISTERED PROFESSIONAL ENGINEER Stanley P. Johnson No. C57793 Exp. 3-31-16 CIVIL STATE OF CALIFORNIA

THE STATE OF CALIFORNIA OR ITS OFFICERS OR AGENTS SHALL NOT BE RESPONSIBLE FOR THE ACCURACY OR COMPLETENESS OF SCANNED COPIES OF THIS PLAN SHEET.

TO ACCOMPANY PLANS DATED _____

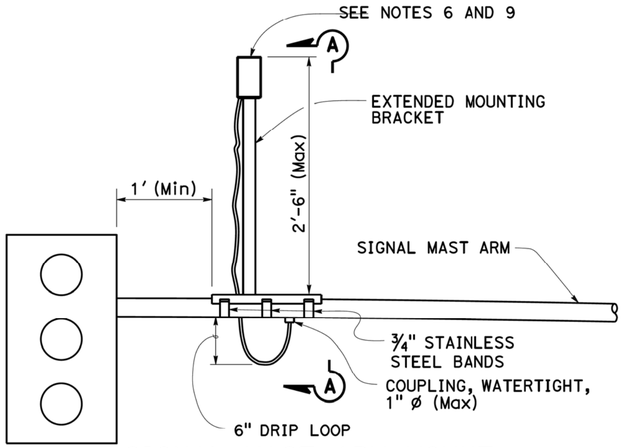

SIGNAL MAST ARM MOUNT

DETAIL A

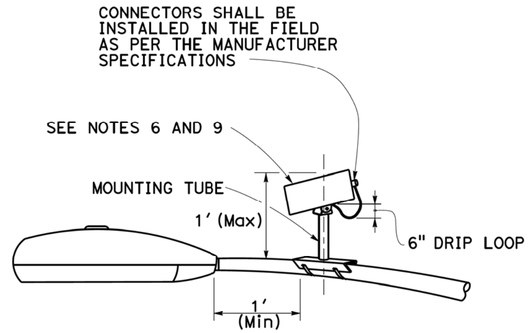

LUMINAIRE MAST ARM MOUNT

DETAIL B

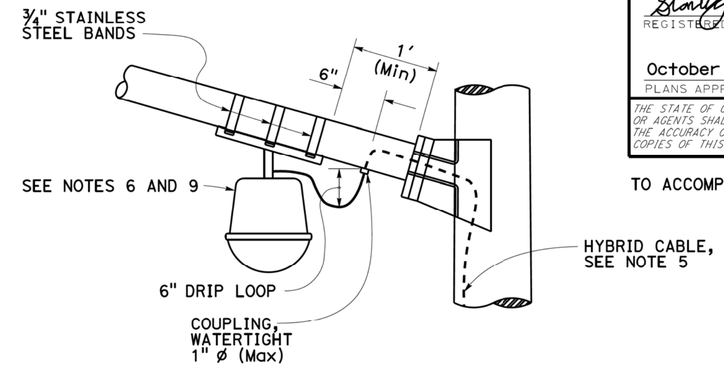

LUMINAIRE MAST ARM MOUNT

DETAIL C

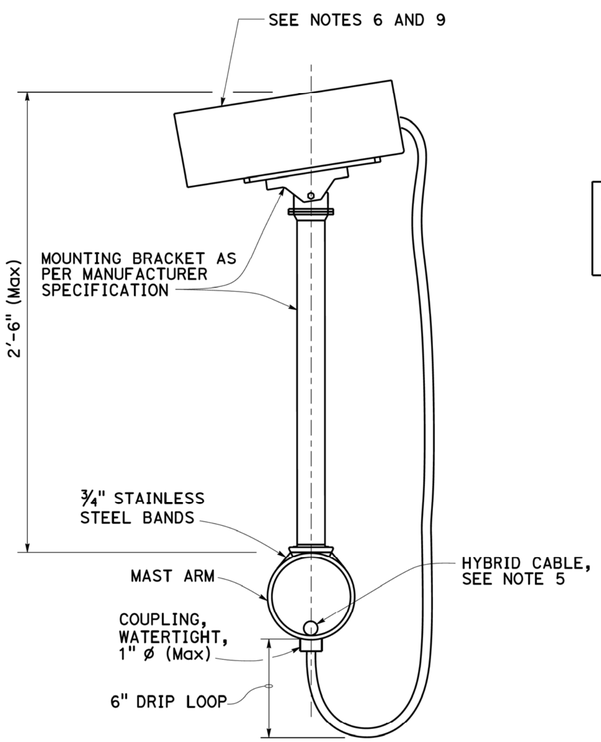

SECTION A-A

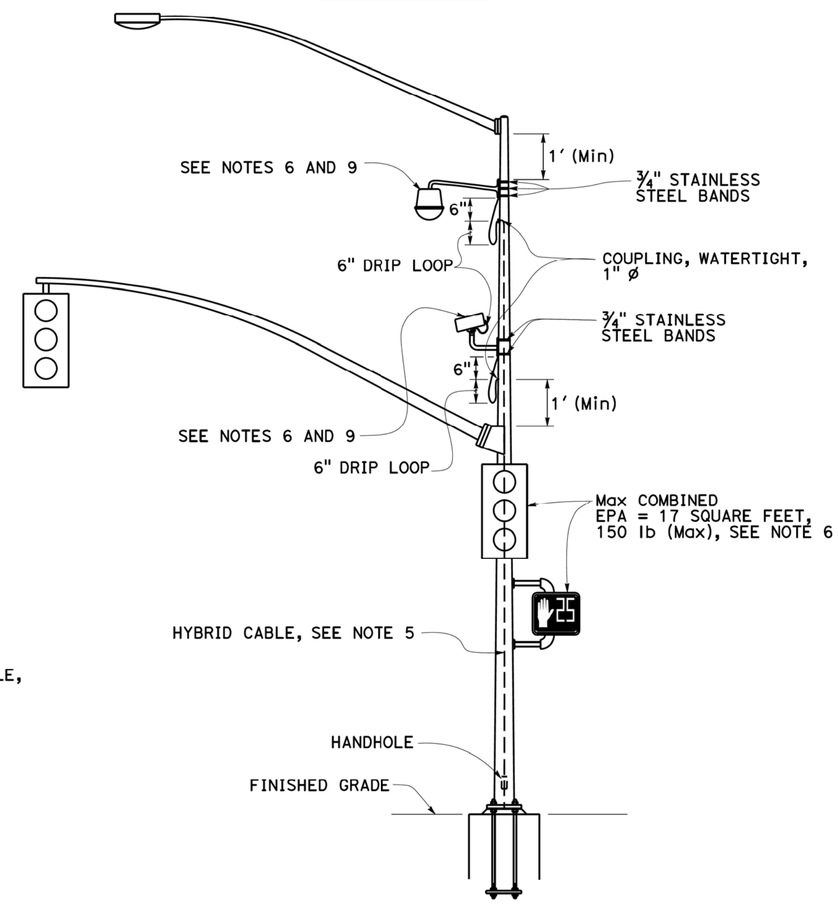

SIGNAL POLE MOUNT

DETAIL D

NOTES:

1. Exact mounting location of miscellaneous attachment and bracket shall be approved by the Engineer per manufacturer's recommendation.
2. Location of cable entrances on signal pole shall be a minimum of 1′ from any flange or base plate.
3. Hybrid cable entrances on signal pole shall be drilled for weathertight coupling as required.
4. Hybrid cable shall have a drip loop at the entrance into signal pole, luminaire mast arm and signal mast arm.
5. A single hybrid cable shall run continuous and shall not be twisted from the miscellaneous attachment to the controller cabinet. No splices shall be allowed.
6. Use the manufacturer's Effective Projected Area (EPA) for miscellaneous attachment. The maximum EPA for each miscellaneous attachment shall be 1.6 square feet with 10 lb Max.
7. Maximum of two miscellaneous attachments per traffic signal standard.
8. Maximum of one miscellaneous attachment per mast arm.
9. Miscellaneous attachment shall be mounted using clamping devices.

STATE OF CALIFORNIA
DEPARTMENT OF TRANSPORTATION

ELECTRICAL SYSTEMS (SIGNAL AND LIGHTING, MISCELLANEOUS ATTACHMENT)

NO SCALE

RSP ES-7R DATED OCTOBER 30, 2015 SUPERSEDES RSP ES-7R DATED JULY 19, 2013 AND STANDARD PLAN ES-7R DATED MAY 20, 2011 - PAGE 479 OF THE STANDARD PLANS BOOK DATED 2010.

REVISED STANDARD PLAN RSP ES-7R

2010 REVISED STANDARD PLAN RSP ES-7R

8-21-15

DIST	COUNTY	ROUTE	POST MILES TOTAL PROJECT	SHEET NO.	TOTAL SHEETS
04	CC/Mrn	580	5.0/7.8, 0.0/3.3	493	579

Theresa Gabriel
REGISTERED ELECTRICAL ENGINEER

April 15, 2016
PLANS APPROVAL DATE

REGISTERED PROFESSIONAL ENGINEER Theresa Aziz Gabriel No. E15129 Exp. 6-30-16 ELECTRICAL STATE OF CALIFORNIA

THE STATE OF CALIFORNIA OR ITS OFFICERS OR AGENTS SHALL NOT BE RESPONSIBLE FOR THE ACCURACY OR COMPLETENESS OF SCANNED COPIES OF THIS PLAN SHEET.

TO ACCOMPANY PLANS DATED _____

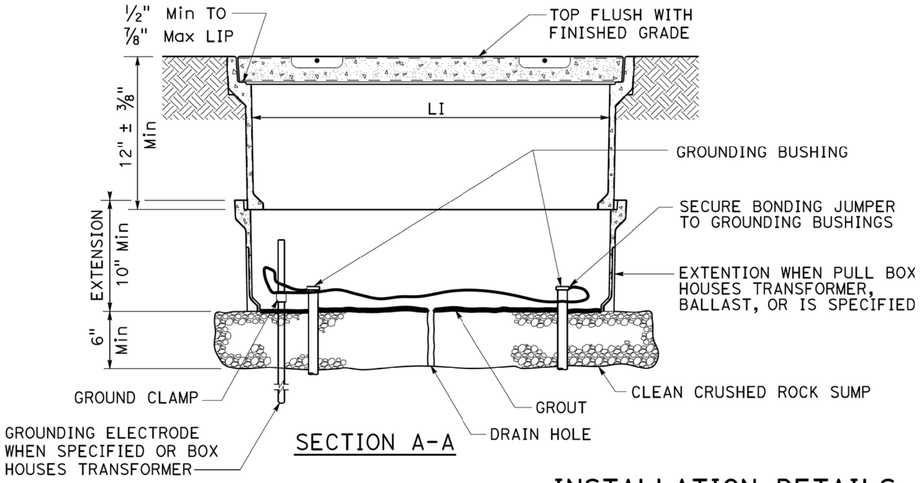

SECTION A-A

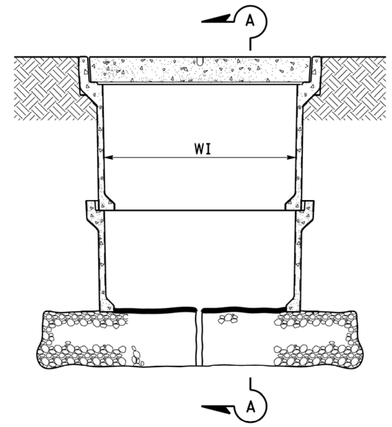

SIDE VIEW

INSTALLATION DETAILS

DETAIL A

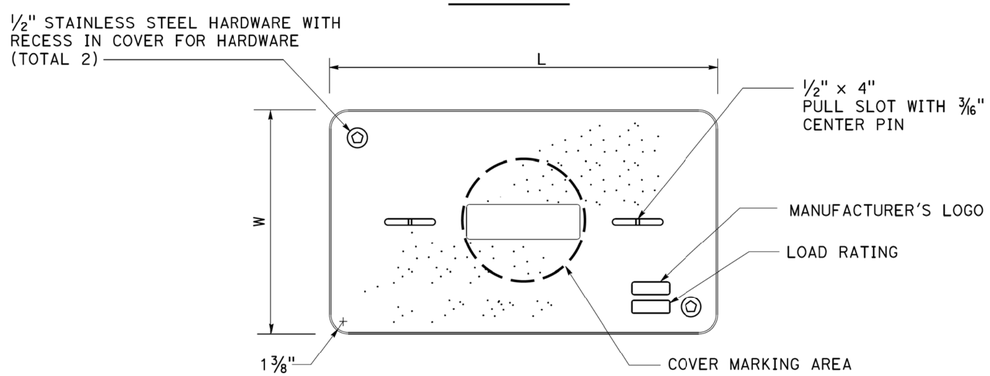

COVER TOP VIEW

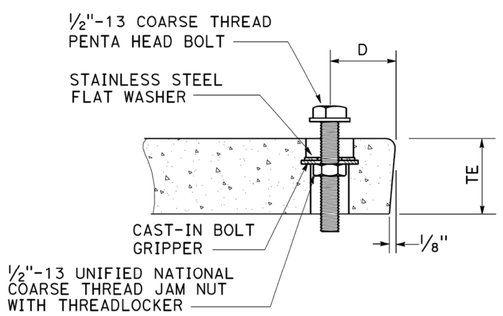

TYPICAL COVER CAPTIVE BOLT

OR SIMILAR

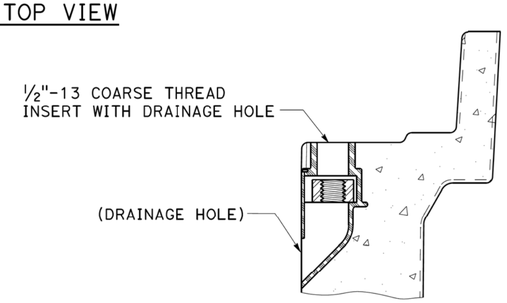

TYPICAL THREADED INSERT

OR SIMILAR

NOTES:

1. The nominal dimensions of the opening in which the cover sets shall be the same as the cover dimensions except the length and width dimensions shall be 1/8" greater.
2. Covers and boxes shall be interchangeable with California standard male and female gages. When interchanged with a standard male or female gage, the top surfaces shall be flush within 1/8". Top outside radius of covers and pull boxes shall have a 1/8" radius.
3. Dimensions for the cover for non-traffic pull box are nominal values.

DIMENSION TABLE

PULL BOX	PULL BOX					COVER				
	MINIMUM DEPTH BOX	MINIMUM DEPTH EXTENSION	MINIMUM WEIGHT	LI Min	WI Min	TE	D	L	W	MINIMUM WEIGHT
No. 3 1/2	12"	N/A	40 lb	1' - 3"	9"	1 3/4"	1 3/4"	1'-3 1/4" - 1'-3 3/8"	10" - 10 1/8"	30 lb
No. 5	12"	10"	55 lb	1' - 8"	11"	2"	1 3/4"	1'-11 1/4"	1'-1 3/4"	60 lb
No. 6	12"	10"	70 lb	2' - 4 1/4"	1' - 3 1/4"	2"	2"	2'-6 1/2"	1'-5 1/2"	85 lb

STATE OF CALIFORNIA
DEPARTMENT OF TRANSPORTATION

ELECTRICAL SYSTEMS (NON-TRAFFIC PULL BOX)

NO SCALE

RSP ES-8A DATED APRIL 15, 2016 SUPERSEDES RSP ES-8A
DATED OCTOBER 30, 2015 AND RSP ES-8A DATED JULY 19, 2013 AND RSP ES-8A
DATED JANUARY 20, 2012 THAT SUPPLEMENTS THE STANDARD PLANS BOOK DATED 2010.

REVISED STANDARD PLAN RSP ES-8A

2010 REVISED STANDARD PLAN RSP ES-8A

DIST	COUNTY	ROUTE	POST MILES TOTAL PROJECT	SHEET NO.	TOTAL SHEETS
04	CC/Mrn	580	5.0/7.8, 0.0/3.3	494	579

Theresa Gabriel
REGISTERED ELECTRICAL ENGINEER

April 15, 2016
PLANS APPROVAL DATE

REGISTERED PROFESSIONAL ENGINEER
Theresa Aziz Gabriel
No. E15129
Exp. 6-30-16
ELECTRICAL
STATE OF CALIFORNIA

THE STATE OF CALIFORNIA OR ITS OFFICERS OR AGENTS SHALL NOT BE RESPONSIBLE FOR THE ACCURACY OR COMPLETENESS OF SCANNED COPIES OF THIS PLAN SHEET.

TO ACCOMPANY PLANS DATED _____

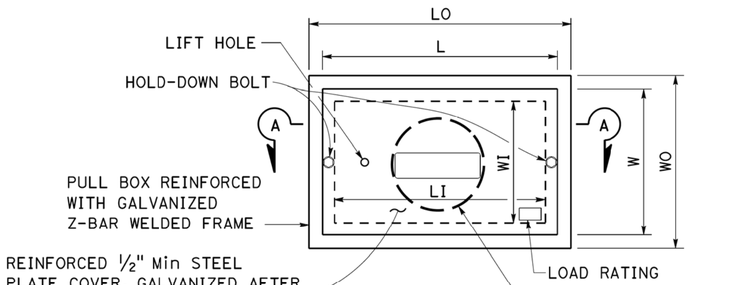

TOP VIEW

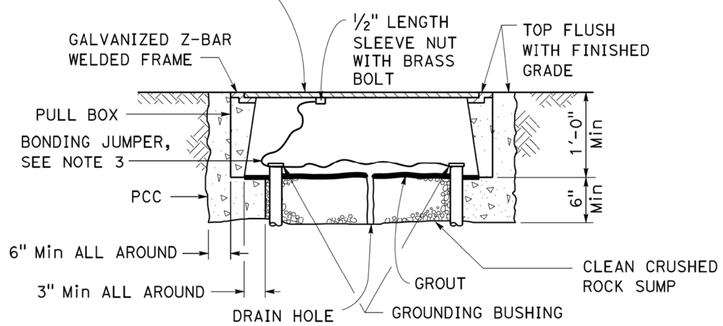

SECTION A-A

No. 3½(T), No. 5(T) AND No. 6(T) TRAFFIC PULL BOX

NOTES:

1. Traffic pull box shall be provided with steel cover and special concrete footing. Steel cover shall have embossed non-skid pattern.
2. Steel reinforcing shall be as regularly used in the standard products of the respective manufacturer.
3. Bonding jumper for metal covers shall be 3' long, minimum.
4. The nominal dimensions of the opening in which the cover sets shall be the same as the cover dimensions except the length and width dimensions shall be ⅛" greater.
5. Covers and boxes shall be interchangeable with California standard male and female gages. When interchanged with a standard male or female gage, the top surfaces shall be flush within ⅛".

DIMENSION TABLE

PULL BOX	PULL BOX						COVER	
	MINIMUM * THICKNESS	MINIMUM DEPTH BOX AND EXTENSION	LO	LI	WO	WI	L **	W **
No. 3½(T)	1½"	1'-0"	1'-10" - 1'-11"	1'-5" - 1'-6½"	1'-3" - 1'-4"	10" - 1'-0"	1'-8" -1'-8½"	1'-1" - 1'-2"
No. 5(T)	1¾"	1'-0"	2'-5" - 2'-6"	2'-0" - 2'-1"	1'-6" - 1'-7"	1'-1" - 1'-2"	2'-3" - 2'-3½"	1'-4" - 1'-4½"
No. 6(T)	2"	1'-0"	2'-11" - 3'-1"	2'-6" - 2'-7"	1'-10" - 2'-0"	1'-5" - 1'-6"	2'-9" - 2'-9½"	1'-8" - 1'-8½"

* EXCLUDING CONDUIT WEB ** TOP DIMENSION

STATE OF CALIFORNIA
DEPARTMENT OF TRANSPORTATION

ELECTRICAL SYSTEMS (TRAFFIC PULL BOX)

NO SCALE

RSP ES-8B DATED APRIL 15, 2016 SUPERSEDES RSP ES-8B DATED OCTOBER 30, 2015 AND RSP ES-8B DATED JULY 19, 2013 AND RSP ES-8B DATED JANUARY 20, 2012 THAT SUPPLEMENTS THE STANDARD PLANS BOOK DATED 2010.

REVISED STANDARD PLAN RSP ES-8B

2010 REVISED STANDARD PLAN RSP ES-8B

Dist	COUNTY	ROUTE	POST MILES TOTAL PROJECT	SHEET No.	TOTAL SHEETS
04	CC/Mrn	580	5.0/7.8, 0.0/3.3	495	579

Theresa Gabriel
REGISTERED ELECTRICAL ENGINEER

October 30, 2015
PLANS APPROVAL DATE

REGISTERED PROFESSIONAL ENGINEER
Theresa Aziz Gabriel
No. E15129
Exp. 6-30-16
ELECTRICAL
STATE OF CALIFORNIA

THE STATE OF CALIFORNIA OR ITS OFFICERS OR AGENTS SHALL NOT BE RESPONSIBLE FOR THE ACCURACY OR COMPLETENESS OF SCANNED COPIES OF THIS PLAN SHEET.

TO ACCOMPANY PLANS DATED _____

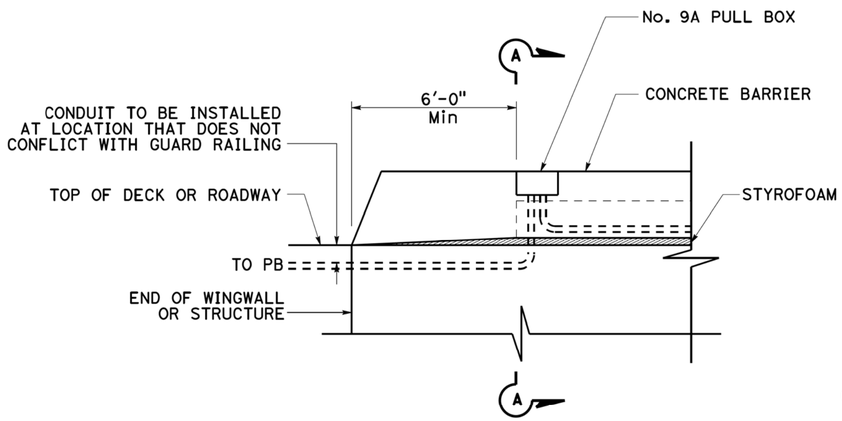

SIDE VIEW

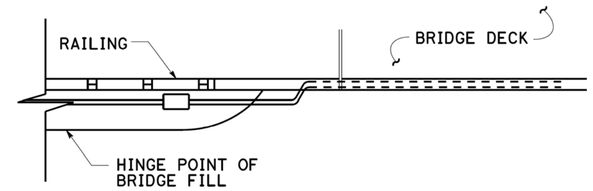

TOP VIEW

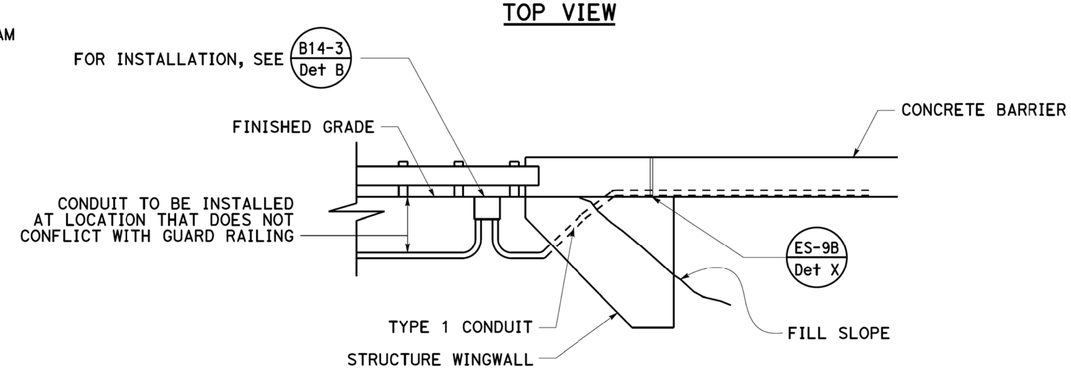

SIDE VIEW

CONDUIT TERMINATION
DETAIL I

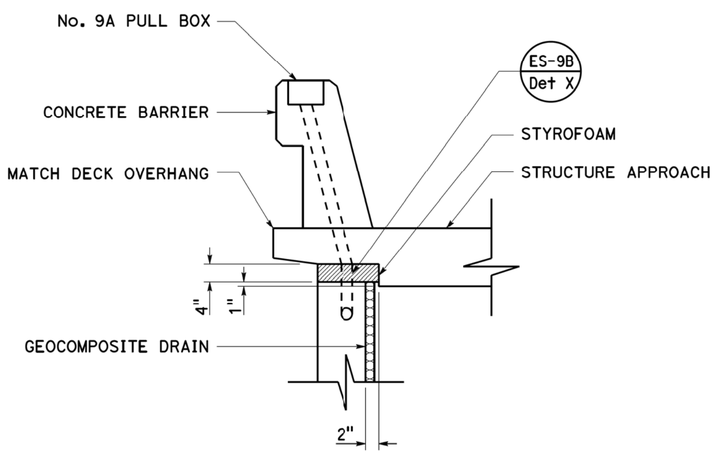

SECTION A-A

CONDUIT TERMINATION
DETAIL A

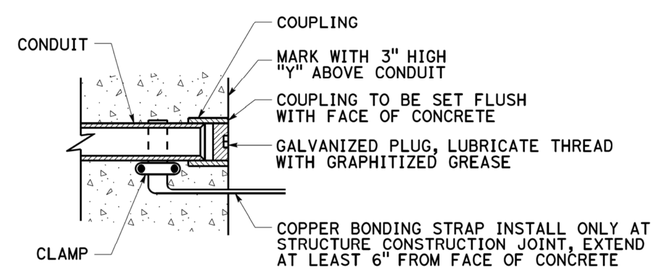

CONDUIT TERMINATION
DETAIL C

STATE OF CALIFORNIA
DEPARTMENT OF TRANSPORTATION

ELECTRICAL SYSTEMS (STRUCTURE PULL BOX INSTALLATIONS)

NO SCALE

RSP ES-9A DATED OCTOBER 30, 2015 SUPERSEDES STANDARD PLAN ES-9A DATED MAY 20, 2011 - PAGE 481 OF THE STANDARD PLANS BOOK DATED 2010.

REVISED STANDARD PLAN RSP ES-9A

2010 REVISED STANDARD PLAN RSP ES-9A

8-20-15

Dist	COUNTY	ROUTE	POST MILES TOTAL PROJECT	SHEET No.	TOTAL SHEETS
04	CC/Mrn	580	5.0/7.8, 0.0/3.3	496	579

REGISTERED ELECTRICAL ENGINEER

October 30, 2015
PLANS APPROVAL DATE

REGISTERED PROFESSIONAL ENGINEER Joswinder S. Gill No. E18551 Exp. 12-31-16 ELECTRICAL STATE OF CALIFORNIA

THE STATE OF CALIFORNIA OR ITS OFFICERS OR AGENTS SHALL NOT BE RESPONSIBLE FOR THE ACCURACY OR COMPLETENESS OF SCANNED COPIES OF THIS PLAN SHEET.

TO ACCOMPANY PLANS DATED _____

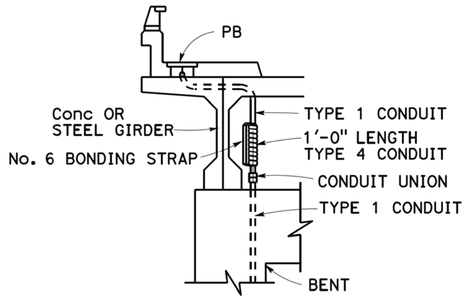

CONDUIT RISER CONNECTION

DETAIL R

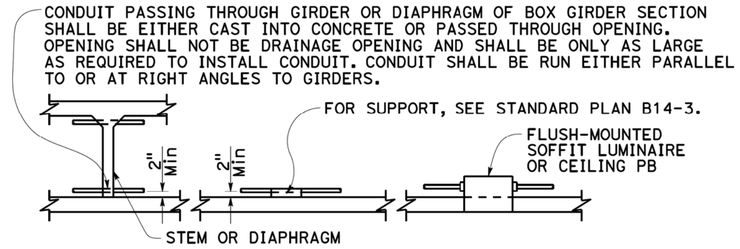

CONDUIT INSTALLATION WITHIN BOX GIRDER SECTIONS

DETAIL S

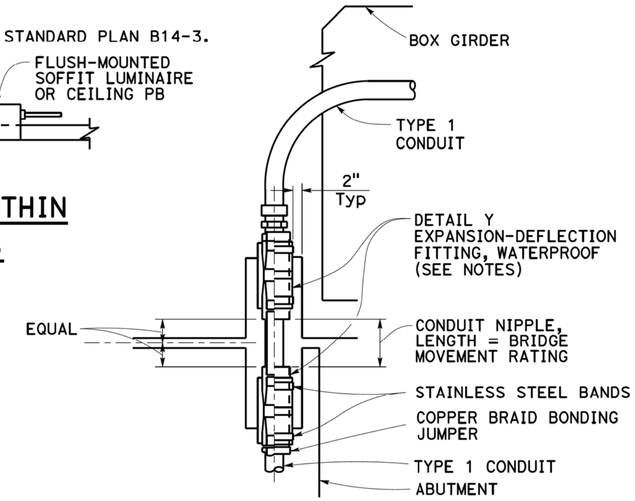

NOTES:

1. Fitting and pocket required only where movement can occur between girder and abutment.
2. Fill pocket around fitting with resilient waterproof compound.

CONDUIT RISER CONNECTION AT COLUMN, ABUTMENT OR STRUCTURE WING WALL

DETAIL U

NOTES:

1. Except for sidewalk joints, a conduit expansion fitting or expansion-deflection fitting shall be installed at each ½" or greater structure joint, hinge or abutment.
2. Fittings or combination of fittings shall be installed to accommodate the movement rating as shown on the structure plans.
3. Fittings shall be installed parallel to superstructure girders.
4. Where lateral movement greater than ¼" may occur, a neoprene sleeve expansion-deflection fitting shall be installed straddling the joint.

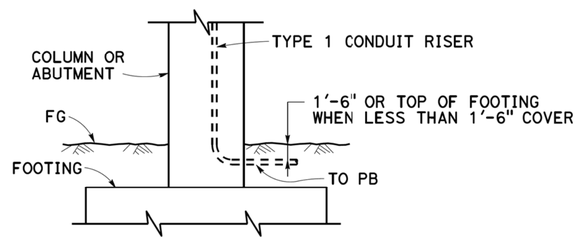

LOWER END OF CONDUIT RISER AT COLUMN OR ABUTMENT

DETAIL T

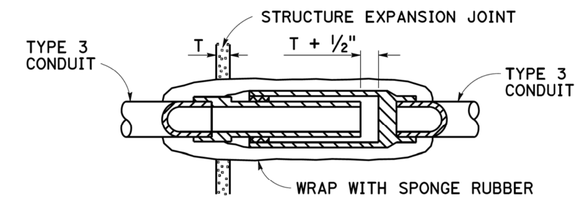

NON-METALLIC CONDUIT EXPANSION FITTING INSTALLATION DETAIL

To be used only when shown or specified on Project Plans

DETAIL V

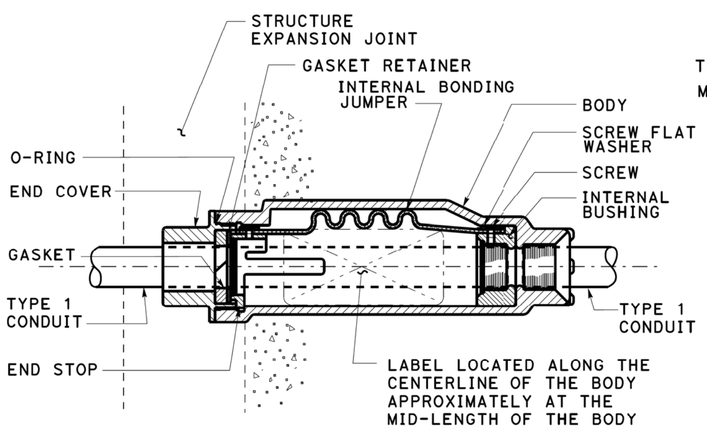

CONDUIT EXPANSION FITTING

DETAIL X

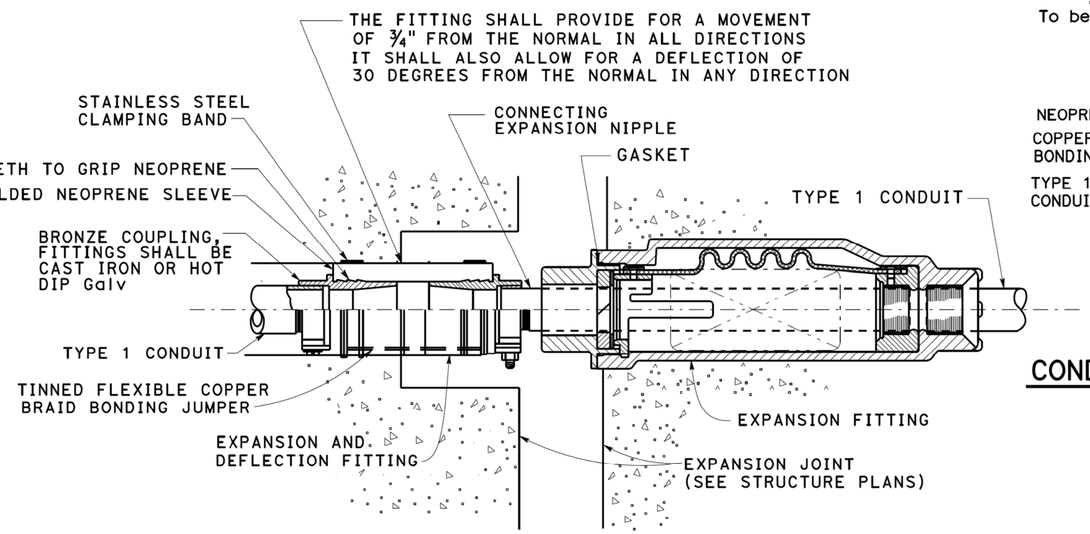

COMBINATION EXPANSION-DEFLECTION FITTINGS

METALLIC CONDUIT INSTALLATION

DETAIL XY

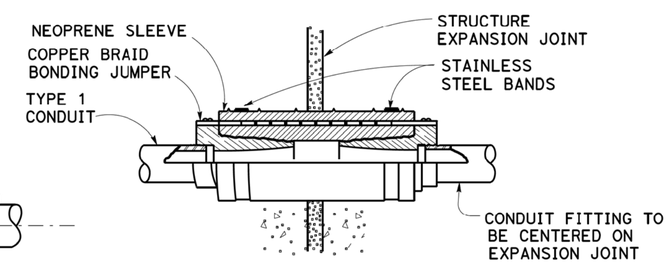

CONDUIT EXPANSION-DEFLECTION FITTING

DETAIL Y

STATE OF CALIFORNIA
DEPARTMENT OF TRANSPORTATION

ELECTRICAL SYSTEMS (CONDUIT RISER AND EXPANSION FITTING, STRUCTURE INSTALLATIONS)

NO SCALE

RSP ES-9B DATED OCTOBER 30, 2015 SUPERSEDES STANDARD PLAN ES-9B DATED MAY 20, 2011 - PAGE 482 OF THE STANDARD PLANS BOOK DATED 2010.

REVISED STANDARD PLAN RSP ES-9B

2010 REVISED STANDARD PLAN RSP ES-9B

9-1-15

Dist	COUNTY	ROUTE	POST MILES TOTAL PROJECT	SHEET No.	TOTAL SHEETS
04	CC/Mrn	580	5.0/7.8, 0.0/3.3	497	579

Theresa Gabriel
REGISTERED ELECTRICAL ENGINEER

April 15, 2016
PLANS APPROVAL DATE

REGISTERED PROFESSIONAL ENGINEER Theresa Aziz Gabriel No. E15129 Exp. 6-30-16 ELECTRICAL STATE OF CALIFORNIA

THE STATE OF CALIFORNIA OR ITS OFFICERS OR AGENTS SHALL NOT BE RESPONSIBLE FOR THE ACCURACY OR COMPLETENESS OF SCANNED COPIES OF THIS PLAN SHEET.

TO ACCOMPANY PLANS DATED _____

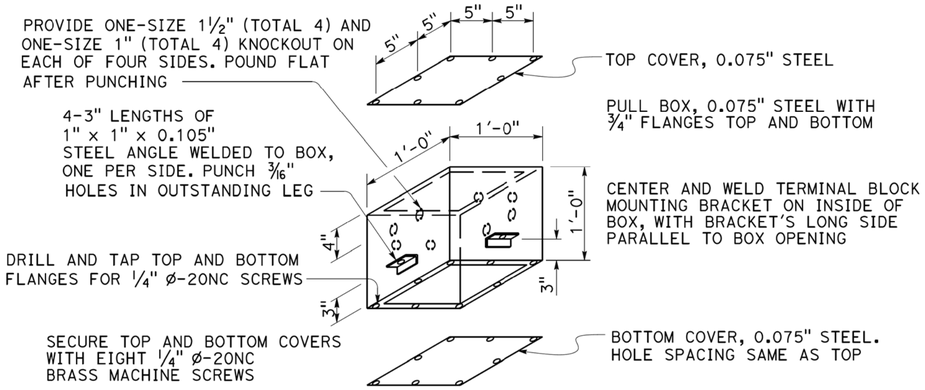

No. 7 PULL BOX (CEILING)

See Note 6

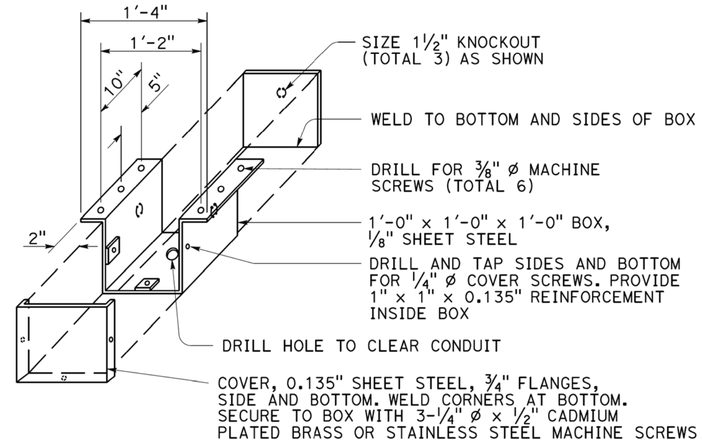

No. 8 PULL BOX

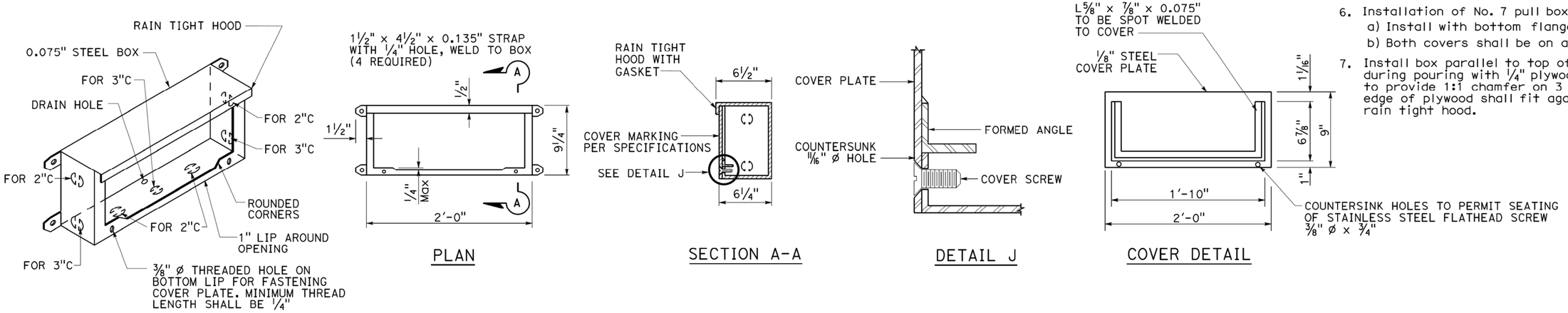

No. 9 PULL BOX (STRUCTURE)

See Note 7

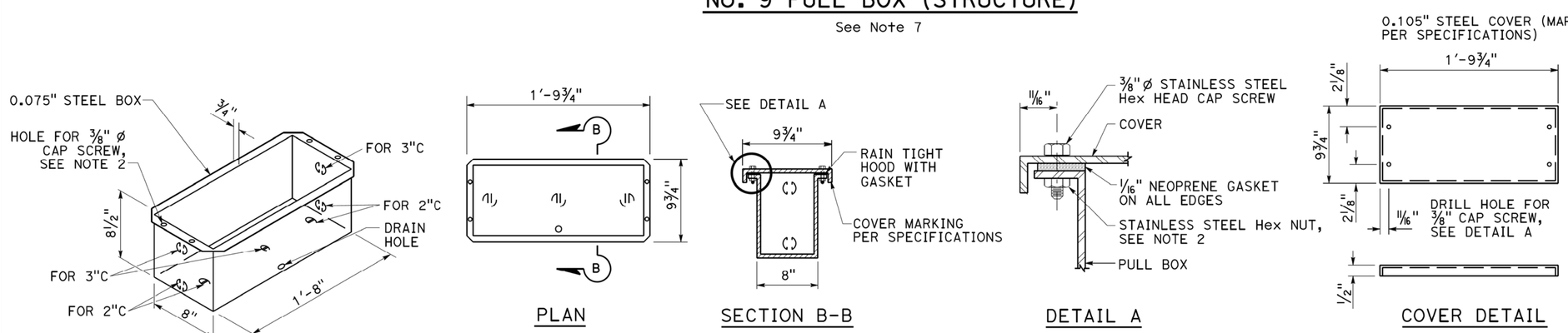

No. 9A PULL BOX (STRUCTURE)

NOTES:

1. Corner joints shall be lapped and secured by spot welding or riveting.
2. Where cap screws are used to attach cover to box, either of the following methods of providing adequate threading may be used:
   a. Tack weld stainless steel Hex nut to bottom of flange (total 4)
   b. Tack weld a ¼" x ⅝" x 8" bar beneath flange (total 2)
3. Pound knockouts flat after punching.
4. Multiple size knockouts (concentric) shall not be permitted.
5. Pull box covers shall be marked as specified.
6. Installation of No. 7 pull box:
   a) Install with bottom flange flush with concrete.
   b) Both covers shall be on a box during pouring.
7. Install box parallel to top of railing. Cover box during pouring with ¼" plywood of sufficient size to provide 1:1 chamfer on 3 sides of cover. Upper edge of plywood shall fit against lower edge of rain tight hood.

STATE OF CALIFORNIA
DEPARTMENT OF TRANSPORTATION

ELECTRICAL SYSTEMS (STRUCTURE PULL BOX)

NO SCALE

RSP ES-9C DATED APRIL 15, 2016 SUPERSEDES RSP ES-9C DATED OCTOBER 30, 2015 AND STANDARD PLAN ES-9C DATED MAY 20, 2011 - PAGE 483 OF THE STANDARD PLANS BOOK DATED 2010.

REVISED STANDARD PLAN RSP ES-9C

2010 REVISED STANDARD PLAN RSP ES-9C

1-12-16

Dist	COUNTY	ROUTE	POST MILES TOTAL PROJECT	SHEET No.	TOTAL SHEETS
04	CC/Mrn	580	5.0/7.8, 0.0/3.3	498	579

Theresa Gabriel
REGISTERED ELECTRICAL ENGINEER

April 15, 2016
PLANS APPROVAL DATE

REGISTERED PROFESSIONAL ENGINEER Theresa Aziz Gabriel No. E15129 Exp. 6-30-16 ELECTRICAL STATE OF CALIFORNIA

THE STATE OF CALIFORNIA OR ITS OFFICERS OR AGENTS SHALL NOT BE RESPONSIBLE FOR THE ACCURACY OR COMPLETENESS OF SCANNED COPIES OF THIS PLAN SHEET.

TO ACCOMPANY PLANS DATED _____

2010 REVISED STANDARD PLAN RSP ES-9D

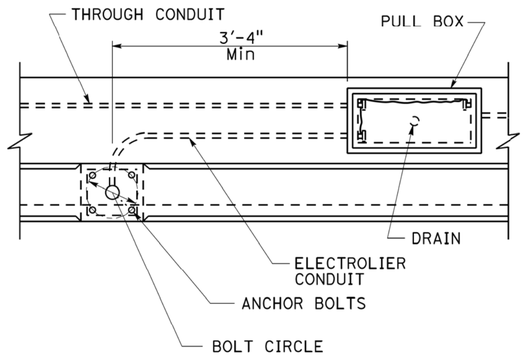

TOP VIEW

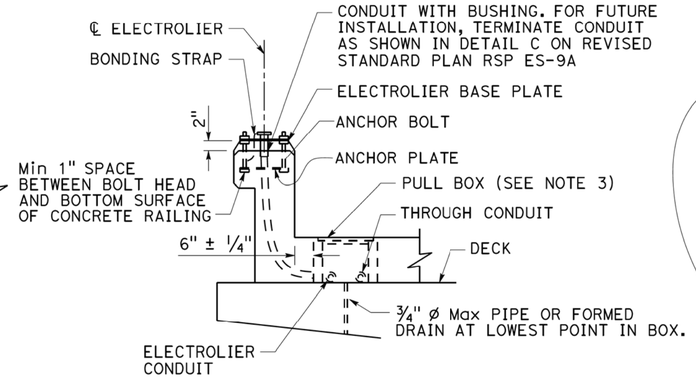

END VIEW

No. 3½, 5, OR 6 PULL BOX INSTALLATION

DETAIL A

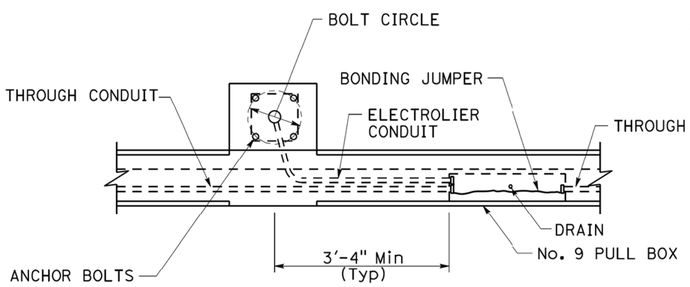

TOP VIEW

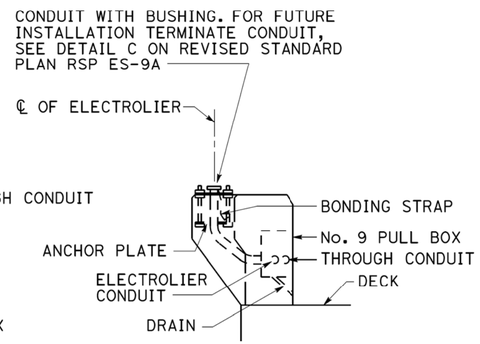

END VIEW

No. 9 PULL BOX INSTALLATION

DETAIL B

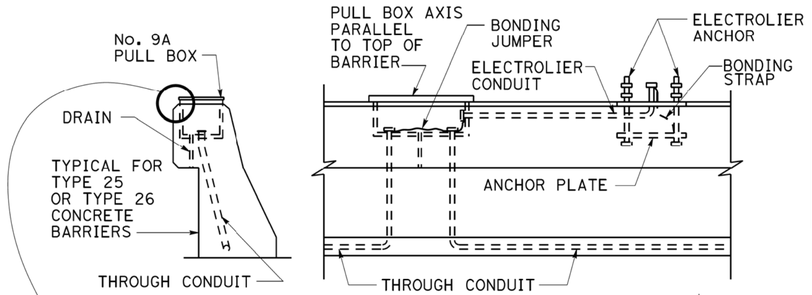

END VIEW

SIDE VIEW

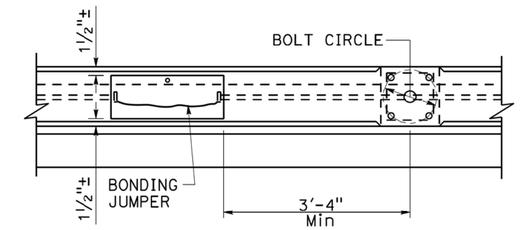

TOP VIEW

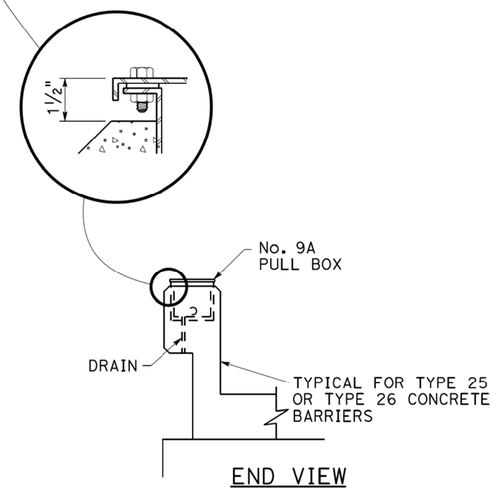

END VIEW

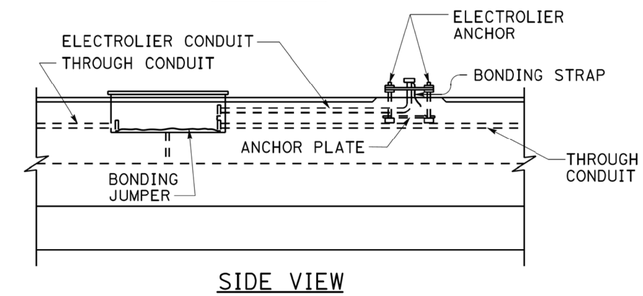

SIDE VIEW

No. 9A PULL BOX INSTALLATION

DETAIL C

NOTES:

1. Axis of pull box shall be parallel to top of barrier, sidewalk or railing.
2. See railing sheet for reinforcement and structural details at electroliers and pull boxes.
3. Top of pull boxes in sidewalk areas shall be flush with sidewalk. Modify base of pull box as required.
4. Boxes inside of vertical barrier or railing shall be closed during pouring of PCC with 1/4" plywood of sufficient size to provide 1:1 chamfer on 3 sides of cover. Upper edge of plywood shall fit against lower edge of raintight hood.
5. Use drain in center if box is horizontal, or at low end if box is inclined. When box is mounted in sloping parapet 1/2" elongated drain hole inside at center or near end as required for drainage.
6. For electrolier anchorage bolts and grouting details, see Revised Standard Plan RSP ES-6B.
7. See Standard Plan B14-3 for conduit in concrete barrier.

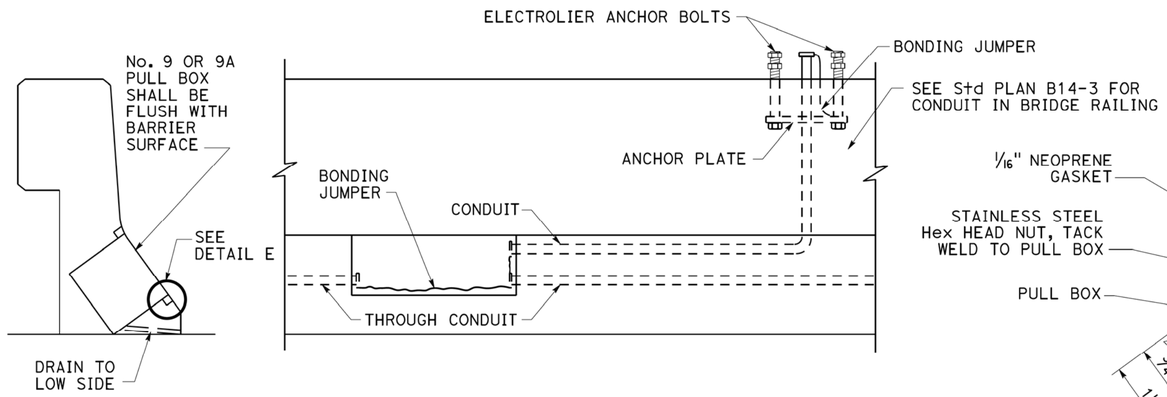

INSTALLATION IN SLOPING PARAPETS

DETAIL D

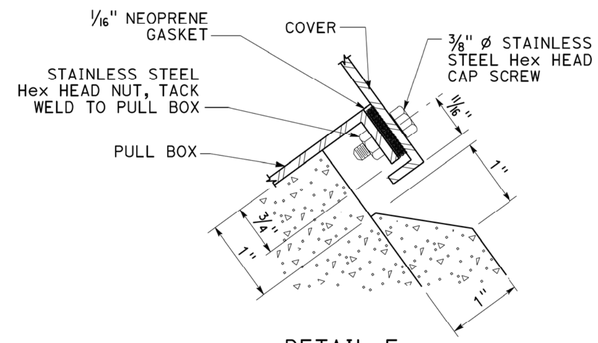

DETAIL E

STATE OF CALIFORNIA
DEPARTMENT OF TRANSPORTATION

ELECTRICAL SYSTEMS (STRUCTURE PULL BOX INSTALLATIONS)

NO SCALE

RSP ES-9D DATED APRIL 15, 2016 SUPERSEDES RSP ES-9D DATED OCTOBER 30, 2015 AND STANDARD PLAN ES-9D DATED MAY 20, 2011 - PAGE 484 OF THE STANDARD PLANS BOOK DATED 2010.

REVISED STANDARD PLAN RSP ES-9D

1-22-16

Dist	COUNTY	ROUTE	POST MILES TOTAL PROJECT	SHEET No.	TOTAL SHEETS
04	CC/Mrn	580	5.0/7.8, 0.0/3.3	499	579

Theresa Gabriel
REGISTERED ELECTRICAL ENGINEER

April 15, 2016
PLANS APPROVAL DATE

REGISTERED PROFESSIONAL ENGINEER Theresa Aziz Gabriel No. E15129 Exp. 6-30-16 ELECTRICAL STATE OF CALIFORNIA

THE STATE OF CALIFORNIA OR ITS OFFICERS OR AGENTS SHALL NOT BE RESPONSIBLE FOR THE ACCURACY OR COMPLETENESS OF SCANNED COPIES OF THIS PLAN SHEET.

TO ACCOMPANY PLANS DATED _____

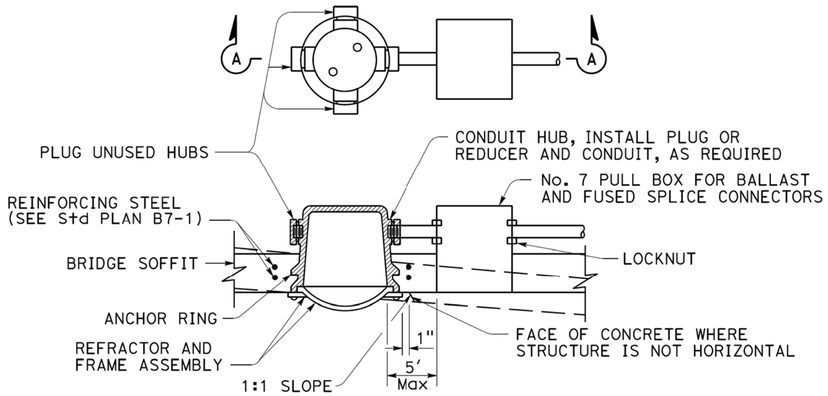

SECTION A-A

FLUSH-MOUNTED SOFFIT LUMINAIRE INSTALLATION

DETAIL F

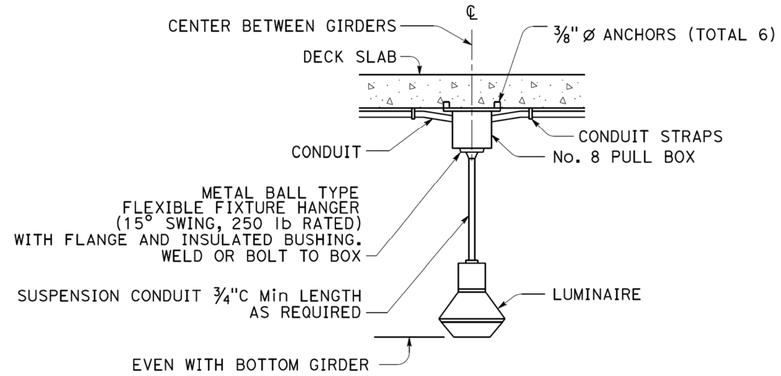

PENDANT SOFFIT LUMINAIRE INSTALLATION

DETAIL P

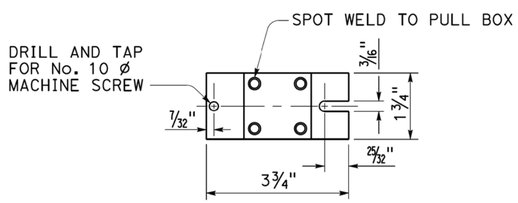

TOP VIEW

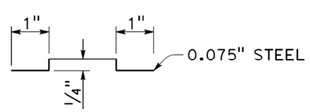

SIDE VIEW

TERMINAL BLOCK MOUNTING BRACKET

DETAIL T

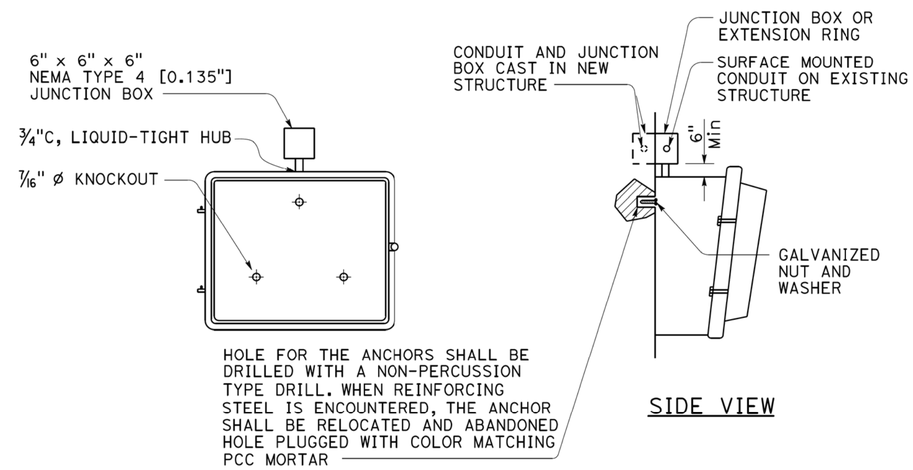

SIDE VIEW

WALL-MOUNTED LUMINAIRE INSTALLATION

DETAIL W

STATE OF CALIFORNIA
DEPARTMENT OF TRANSPORTATION

ELECTRICAL SYSTEMS (FLUSH-MOUNTED SOFFIT, PENDANT SOFFIT AND WALL-MOUNTED LUMINAIRE STRUCTURE INSTALLATIONS)

NO SCALE

RSP ES-9E DATED APRIL 15, 2016 SUPERSEDES RSP ES-9E DATED OCTOBER 30, 2015 AND STANDARD PLAN ES-9E DATED MAY 20, 2011 - PAGE 485 OF THE STANDARD PLANS BOOK DATED 2010.

REVISED STANDARD PLAN RSP ES-9E

2010 REVISED STANDARD PLAN RSP ES-9E

1-12-16

Dist	COUNTY	ROUTE	POST MILES TOTAL PROJECT	SHEET No.	TOTAL SHEETS
04	CC/Mrn	580	5.0/7.8, 0.0/3.3	500	579

Theresa Gabriel
REGISTERED ELECTRICAL ENGINEER

October 30, 2015
PLANS APPROVAL DATE

REGISTERED PROFESSIONAL ENGINEER Theresa Aziz Gabriel No. E15129 Exp. 6-30-16 ELECTRICAL STATE OF CALIFORNIA

THE STATE OF CALIFORNIA OR ITS OFFICERS OR AGENTS SHALL NOT BE RESPONSIBLE FOR THE ACCURACY OR COMPLETENESS OF SCANNED COPIES OF THIS PLAN SHEET.

TO ACCOMPANY PLANS DATED _____

2010 REVISED STANDARD PLAN RSP ES-9F

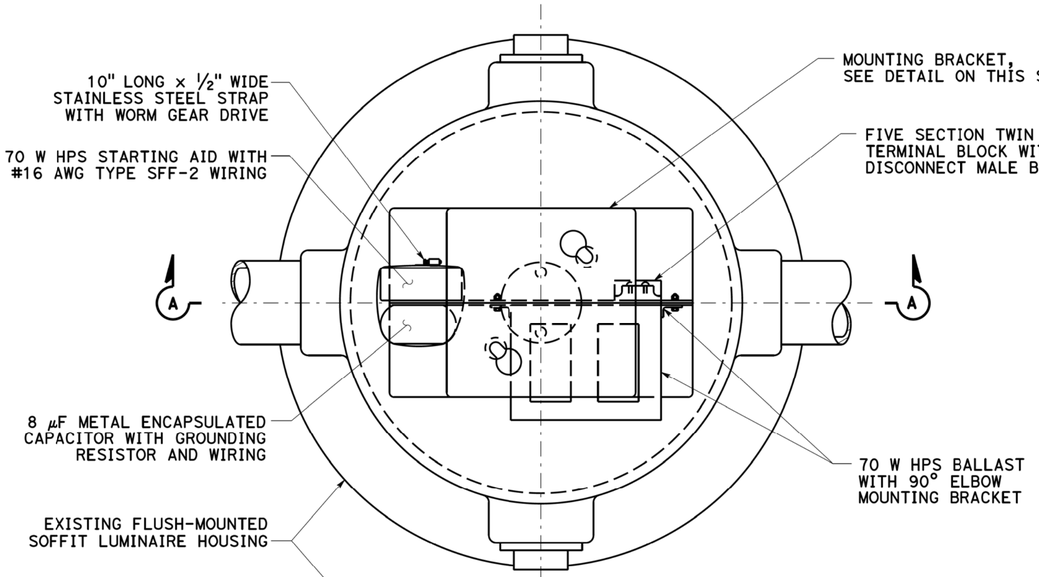

PLAN

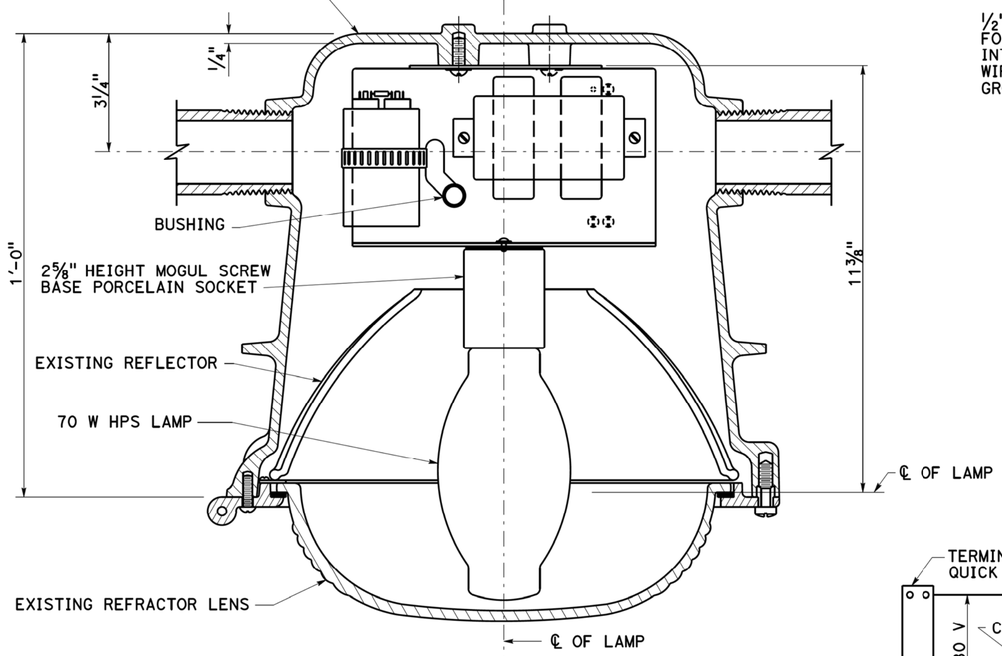

SECTION A-A

FLUSH-MOUNTED SOFFIT LUMINAIRE ASSEMBLY

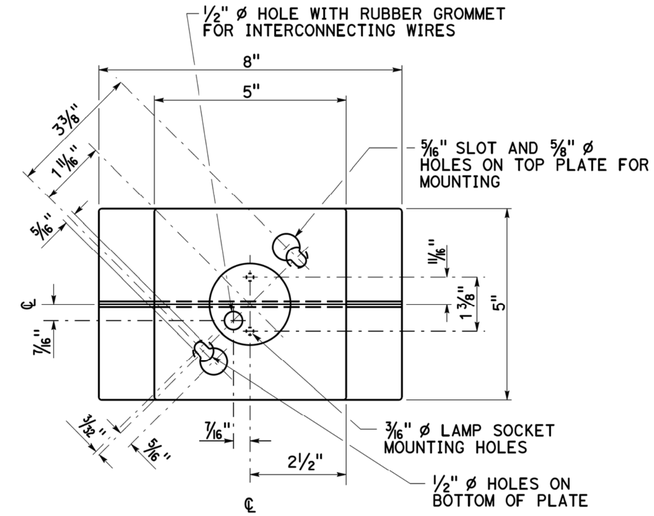

TOP VIEW

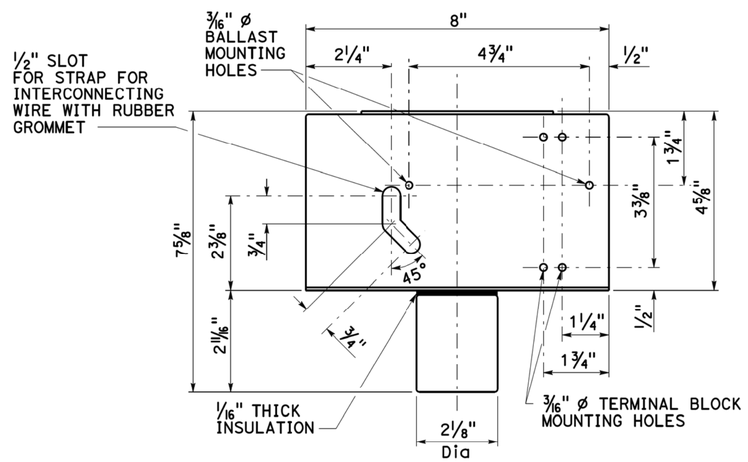

FRONT VIEW

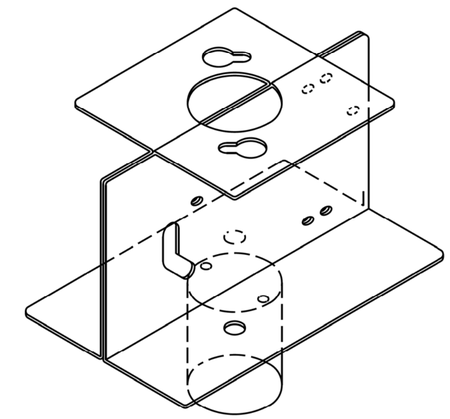

PREFORM TWO SHEETS 1/16" MILD STEEL AS SHOWN, SPOTWELD TOGETHER IN EACH CORNER WITH FOUR SPOTWELDS.

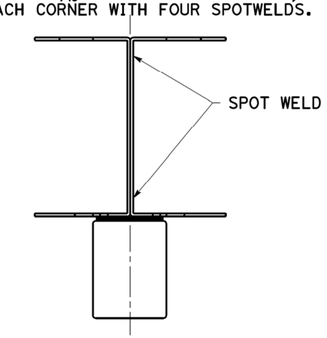

SIDE VIEW

MOUNTING BRACKET DETAILS

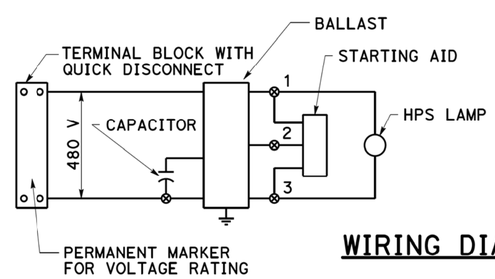

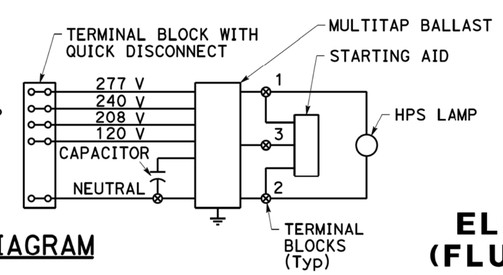

WIRING DIAGRAM

NOTES:

1. Use No. 8 ø machine screws, lockwashers and nuts for mounting ballast and terminal strips.
2. In-line fuse as required on Standard Plan ES-13B.

STATE OF CALIFORNIA
DEPARTMENT OF TRANSPORTATION

ELECTRICAL SYSTEMS (FLUSH-MOUNTED SOFFIT LUMINAIRE DETAILS)

NO SCALE

RSP ES-9F DATED OCTOBER 30, 2015 SUPERSEDES STANDARD PLAN ES-9F DATED MAY 20, 2011 - PAGE 486 OF THE STANDARD PLANS BOOK DATED 2010.

REVISED STANDARD PLAN RSP ES-9F

9-1-15

Dist	COUNTY	ROUTE	POST MILES TOTAL PROJECT	SHEET No.	TOTAL SHEETS
04	CC/Mrn	580	5.0/7.8, 0.0/3.3	501	579

Theresa Gabriel
REGISTERED ELECTRICAL ENGINEER

October 30, 2015
PLANS APPROVAL DATE

REGISTERED PROFESSIONAL ENGINEER
Theresa Aziz Gabriel
No. E15129
Exp. 6-30-16
ELECTRICAL
STATE OF CALIFORNIA

THE STATE OF CALIFORNIA OR ITS OFFICERS OR AGENTS SHALL NOT BE RESPONSIBLE FOR THE ACCURACY OR COMPLETENESS OF SCANNED COPIES OF THIS PLAN SHEET.

TO ACCOMPANY PLANS DATED _____

NOTE:
Curves represent the minimum footcandle (FC).

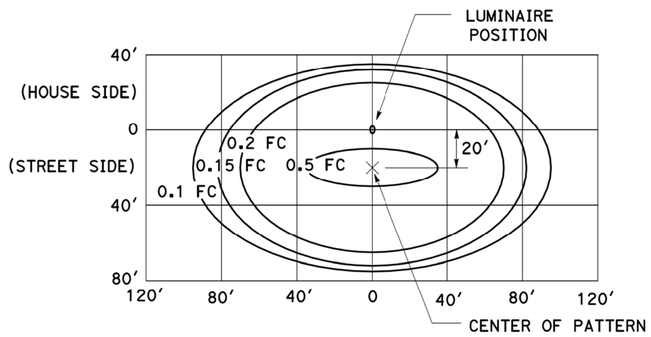

LED LUMINAIRE 165 W
34′ Mounting Height

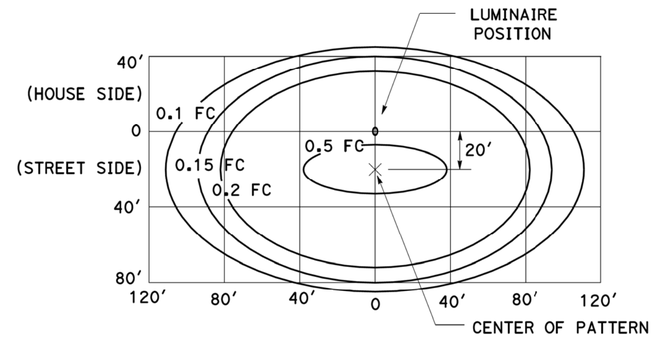

LED LUMINAIRE 235 W
40′ Mounting Height

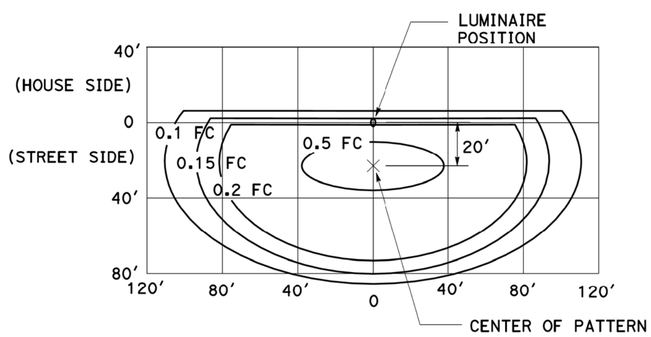

LED LUMINAIRE 235 W
40′ Mounting Height
with back side control

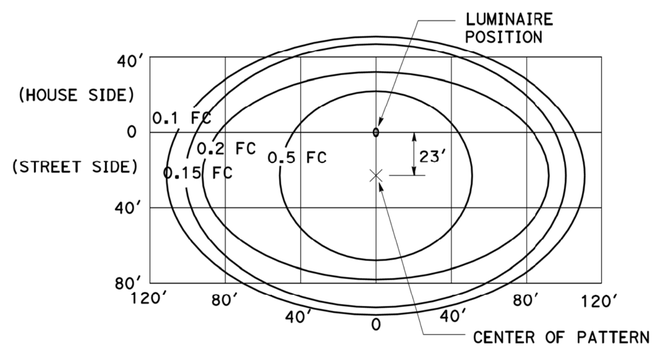

LED LUMINAIRE 300 W
40′ Mounting Height

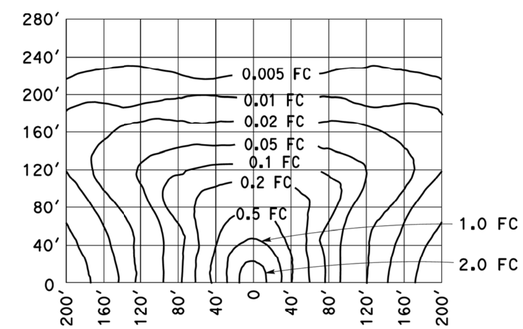

LOW-PRESSURE SODIUM LUMINAIRE 180 W
40′ Mounting Height
Lamp operated at 33,000 lm

STATE OF CALIFORNIA
DEPARTMENT OF TRANSPORTATION

ELECTRICAL SYSTEMS (ISOFOOTCANDLE CURVES)

NO SCALE

RSP ES-10A DATED OCTOBER 30, 2015 SUPERSEDES RSP ES-10A DATED JULY 19, 2013 THAT SUPPLEMENTS THE STANDARD PLANS BOOK DATED 2010.

REVISED STANDARD PLAN RSP ES-10A

2010 REVISED STANDARD PLAN RSP ES-10A

9-29-15

Dist	COUNTY	ROUTE	POST MILES TOTAL PROJECT	SHEET No.	TOTAL SHEETS
04	CC/Mrn	580	5.0/7.8, 0.0/3.3	502	579

REGISTERED CIVIL ENGINEER

July 15, 2016
PLANS APPROVAL DATE

REGISTERED PROFESSIONAL ENGINEER
Stanley P. Johnson
No. C57793
Exp. 3-31-18
CIVIL
STATE OF CALIFORNIA

THE STATE OF CALIFORNIA OR ITS OFFICERS OR AGENTS SHALL NOT BE RESPONSIBLE FOR THE ACCURACY OR COMPLETENESS OF SCANNED COPIES OF THIS PLAN SHEET.

TO ACCOMPANY PLANS DATED _____

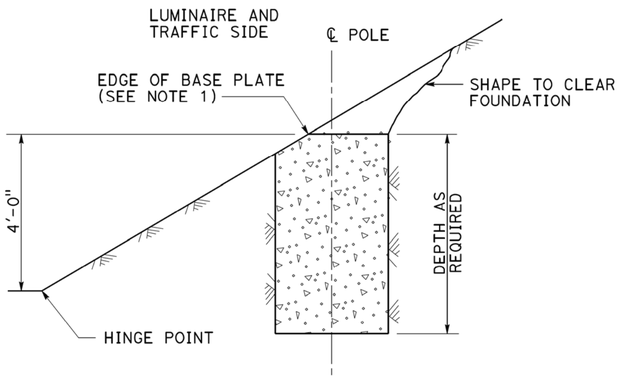

CUT SLOPES
STEEPER THAN 4:1,
LESS THAN 2:1
DETAIL A-1
See Note 2 and 3

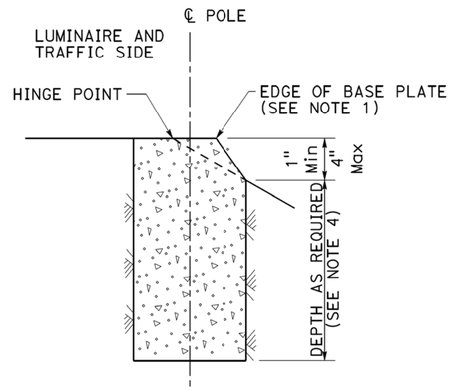

FILL SLOPES
STEEPER THAN 4:1,
LESS THAN 2:1
DETAIL A-2
See Note 2 and 3

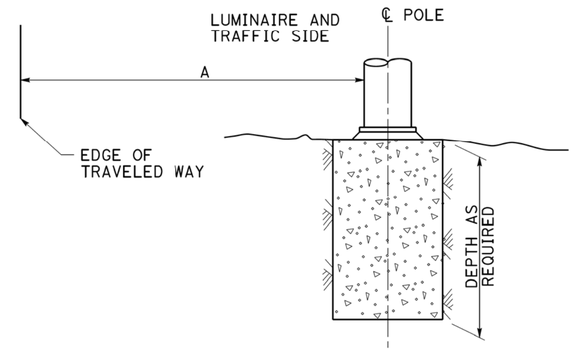

FLAT SECTIONS, CUT OR FILL SLOPES
4:1 OR FLATTER
DETAIL A-3
See Note 2

STANDARD TYPE	SETBACK (DIMENSION A)
32	30'-0" (Min)
31	20'-0" (Min)
15, 15D, 15-SB, 21, 21D, 30	ARM LENGTH (Min)

FOUNDATIONS ADJACENT TO ALL ROADWAYS EXCEPT IN SIDEWALK, MEDIAN AND ISLAND AREAS
DETAIL A

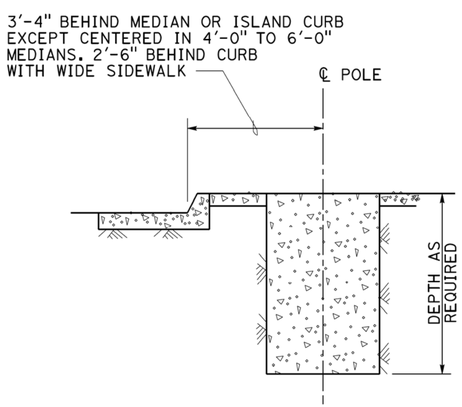

MEDIAN, ISLAND
OR WIDE SIDEWALK
DETAIL B-1
7' Wide and wider

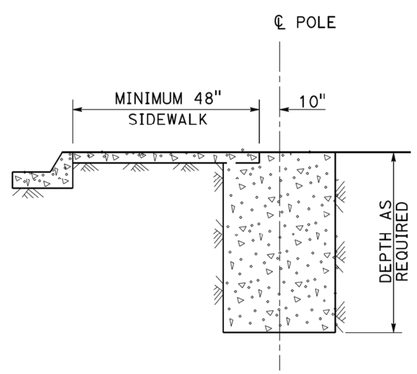

NARROW SIDEWALK
DETAIL B-2
Less than 7' wide

FOUNDATIONS IN SIDEWALK, MEDIAN AND ISLAND AREAS
DETAIL B

NOTES:

1. Where a portion of the foundation is above grade, the top edges shall have a 1" chamfer.
2. Slopes shall be horizontal to vertical ratio (Horizontal : Vertical).
3. Horizontal setbacks on cut and fill slopes steeper than 4:1 shall not exceed the distance shown for flat sections.
4. CIDH embedment depth shall be increased beyond standard depths by the diameter of the CIDH.

STATE OF CALIFORNIA
DEPARTMENT OF TRANSPORTATION

ELECTRICAL SYSTEMS (FOUNDATION INSTALLATIONS)

NO SCALE

RSP ES-11 DATED JULY 15, 2016 SUPERSEDES RSP ES-11 DATED JULY 19, 2013 AND STANDARD PLAN ES-11 DATED MAY 20, 2011 - PAGE 488 OF THE STANDARD PLANS BOOK DATED 2010.

REVISED STANDARD PLAN RSP ES-11

2010 REVISED STANDARD PLAN RSP ES-11

6-20-16

Dist	COUNTY	ROUTE	POST MILES TOTAL PROJECT	SHEET No.	TOTAL SHEETS
04	CC/Mrn	580	5.0/7.8, 0.0/3.3	503	579

Theresa Gabriel
REGISTERED ELECTRICAL ENGINEER

April 15, 2016
PLANS APPROVAL DATE

REGISTERED PROFESSIONAL ENGINEER Theresa Aziz Gabriel No. E15129 Exp. 6-30-16 ELECTRICAL STATE OF CALIFORNIA

THE STATE OF CALIFORNIA OR ITS OFFICERS OR AGENTS SHALL NOT BE RESPONSIBLE FOR THE ACCURACY OR COMPLETENESS OF SCANNED COPIES OF THIS PLAN SHEET.

TO ACCOMPANY PLANS DATED _____

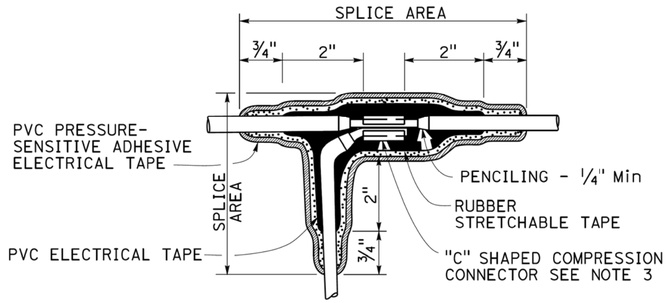

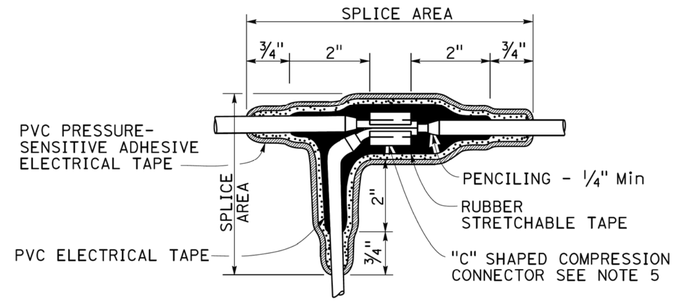

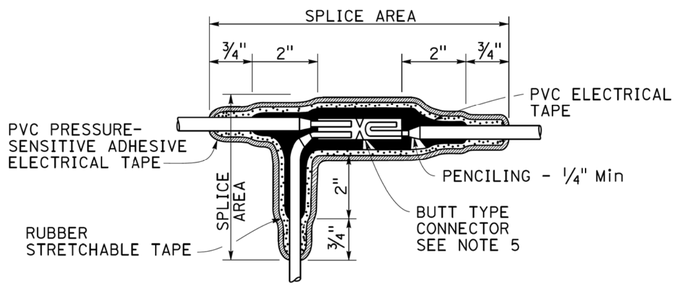

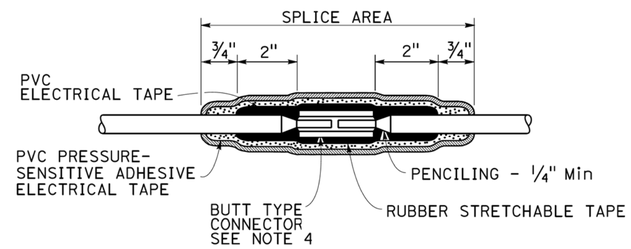

TYPICAL SPLICE INSULATION METHOD B

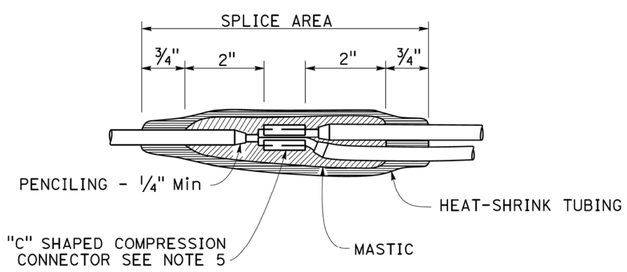

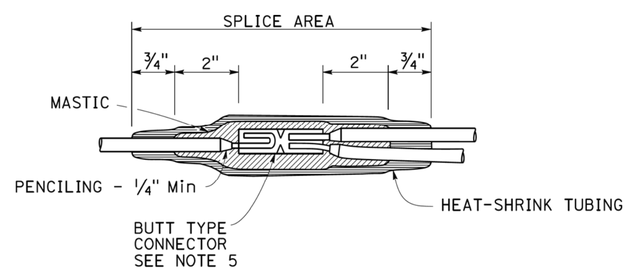

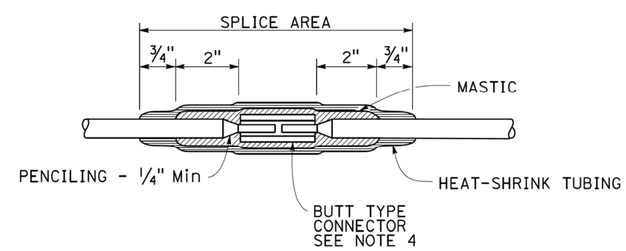

TYPICAL SPLICE INSULATION HEAT-SHRINK TUBING

NOTES:

1. Dimensions are minimum.
2. Rubber tapes shall be rolled after application.
3. Between 1 free-end and 1 through conductor.
4. Between 2 free-end conductors.
5. Between 3 free-end conductors.

STATE OF CALIFORNIA
DEPARTMENT OF TRANSPORTATION

ELECTRICAL SYSTEMS (SPLICE INSULATION METHODS DETAILS)

NO SCALE

RSP ES-13A DATED APRIL 15, 2016 SUPERSEDES RSP ES-13A DATED OCTOBER 30, 2015 AND STANDARD PLAN ES-13A DATED MAY 20, 2011 - PAGE 491 OF THE STANDARD PLANS BOOK DATED 2010.

REVISED STANDARD PLAN RSP ES-13A

2010 REVISED STANDARD PLAN RSP ES-13A

1-22-16

Dist	COUNTY	ROUTE	POST MILES TOTAL PROJECT	SHEET No.	TOTAL SHEETS
04	CC/Mrn	580	5.0/7.8, 0.0/3.3	504	579

Theresa Gabriel
REGISTERED ELECTRICAL ENGINEER

April 15, 2016
PLANS APPROVAL DATE

REGISTERED PROFESSIONAL ENGINEER Theresa Aziz Gabriel No. E15129 Exp. 6-30-16 ELECTRICAL STATE OF CALIFORNIA

THE STATE OF CALIFORNIA OR ITS OFFICERS OR AGENTS SHALL NOT BE RESPONSIBLE FOR THE ACCURACY OR COMPLETENESS OF SCANNED COPIES OF THIS PLAN SHEET.

TO ACCOMPANY PLANS DATED _____

CIRCUIT VOLTAGE	FUSE VOLTAGE RATING	FUSE CURRENT RATING						
		HPS LAMP BALLAST		LOW PRESSURE SODIUM BALLAST	INDUCTION SIGN LIGHTING	SINGLE PHASE (TWO WIRE) TRANSFORMERS (PRIMARY SIDE)		
		70 W	100 W	180 W	85 W	1 kVA	2 kVA	3 kVA
120 V	250 V	5 A	5 A	5 A	5 A	10 A	20 A	30 A
240 V	250 V	5 A	5 A	5 A	5 A	6 A	10 A	20 A
480 V	500-600 V	5 A	5 A	3 A	1 A (SEE NOTE 2)	3 A	6 A	10 A

NOTES:

1. Primary lines of multiple ballasts shall be provided with fused connectors. Fuse ratings shall be as noted above.
2. See Revised Standard Plan RSP ES-15D, Type SC3 control.

FUSE RATINGS FOR FUSED CONNECTORS

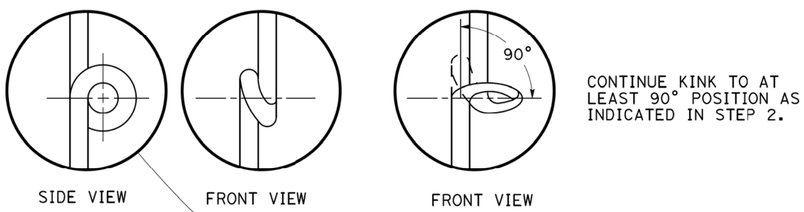

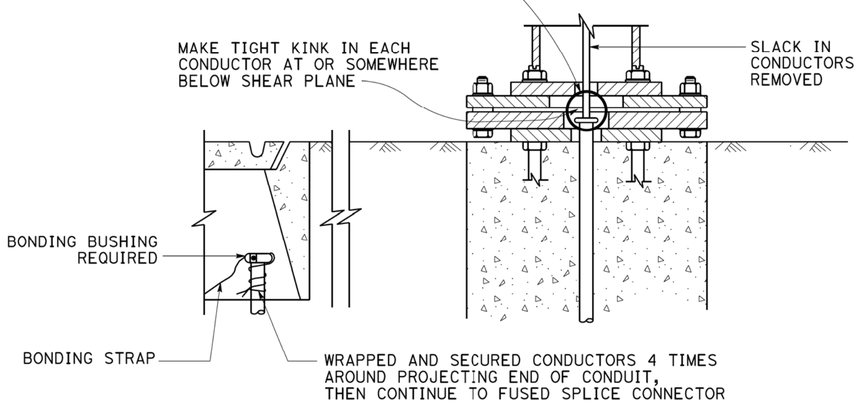

KINKING DETAIL FOR SLIP BASE STANDARDS

DETAIL A

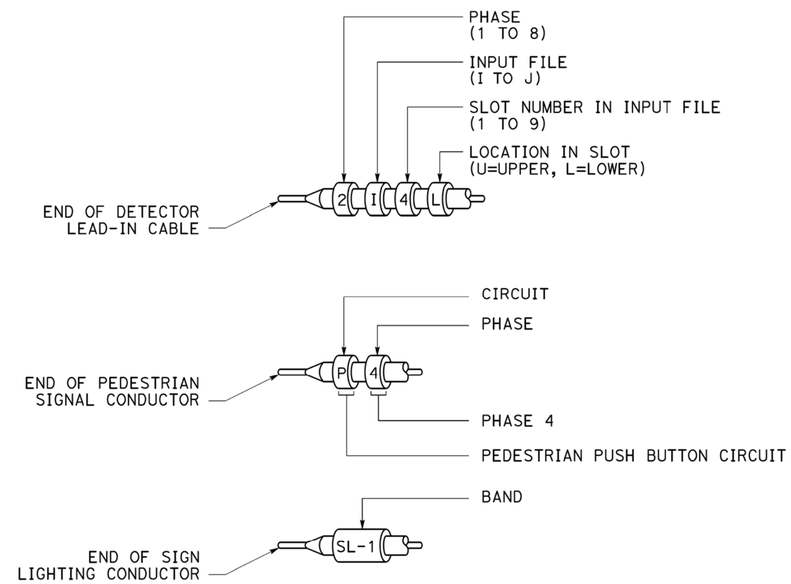

TYPICAL BANDING DETAILS

DETAIL B

STATE OF CALIFORNIA
DEPARTMENT OF TRANSPORTATION

ELECTRICAL SYSTEMS (FUSE RATING, KINKING AND BANDING DETAIL)

NO SCALE

RSP ES-13B DATED APRIL 15, 2016 SUPERSEDES STANDARD PLAN ES-13B DATED MAY 20, 2011 - PAGE 492 OF THE STANDARD PLANS BOOK DATED 2010.

REVISED STANDARD PLAN RSP ES-13B

2010 REVISED STANDARD PLAN RSP ES-13B

1-12-16

Dist	COUNTY	ROUTE	POST MILES TOTAL PROJECT	SHEET No.	TOTAL SHEETS
04	CC/Mrn	580	5.0/7.8, 0.0/3.3	505	579

REGISTERED CIVIL ENGINEER

July 15, 2016
PLANS APPROVAL DATE

REGISTERED PROFESSIONAL ENGINEER
Stanley P. Johnson
No. C57793
Exp. 3-31-18
CIVIL
STATE OF CALIFORNIA

THE STATE OF CALIFORNIA OR ITS OFFICERS OR AGENTS SHALL NOT BE RESPONSIBLE FOR THE ACCURACY OR COMPLETENESS OF SCANNED COPIES OF THIS PLAN SHEET.

TO ACCOMPANY PLANS DATED _____

POLE TYPE	POLE DATA				BASE PLATE DATA				CIDH	
	HEIGHT "h"	Min OD BASE	Min OD TOP	THICKNESS	"C"	THICKNESS	ANCHOR BOLT SIZE	BC = BOLT CIRCLE	Dia	"d"
CCTV 25	25′	7⅜"	3¾"	0.1793"	1′-1"	1"	1½" ø x 36"	11½"	2′-6"	7′-0"
CCTV 30	30′	8"			1′-1½"			1′-0"		7′-6"
CCTV 35	35′	8⅝"			1′-2"			1′-1"		8′-0"
CCTV 40	40′	9⅜"			1′-3"			1′-1½"		8′-6"
CCTV 45	45′	10"						1′-2"		

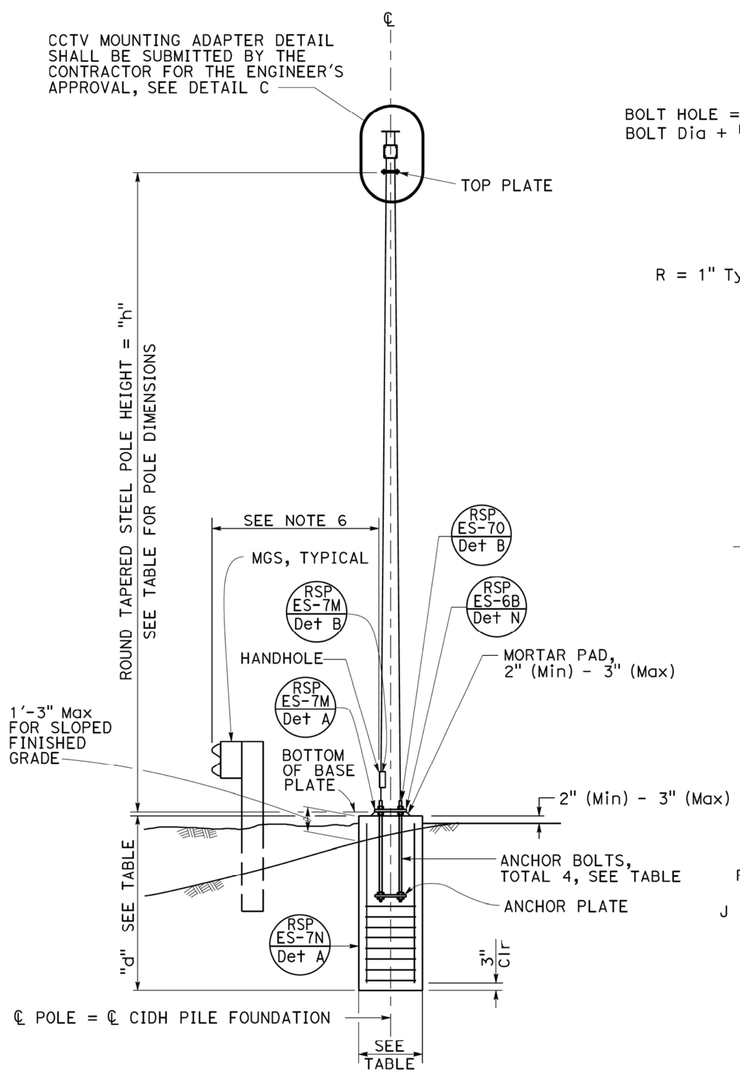

ELEVATION A

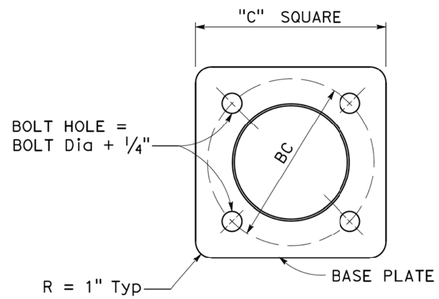

BASE PLATE

DETAIL A

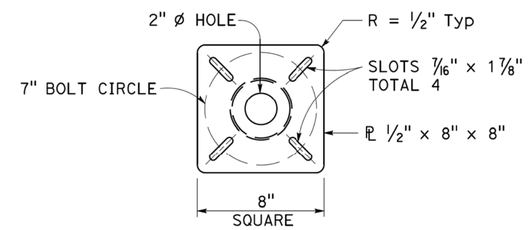

TOP PLATE

DETAIL B

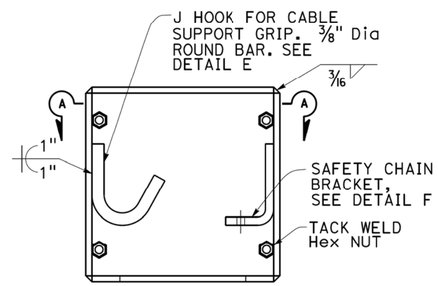

BOX ENCLOSURE

DETAIL D

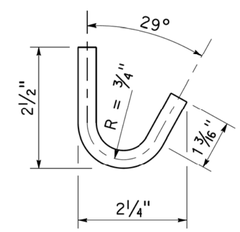

J HOOK

DETAIL E

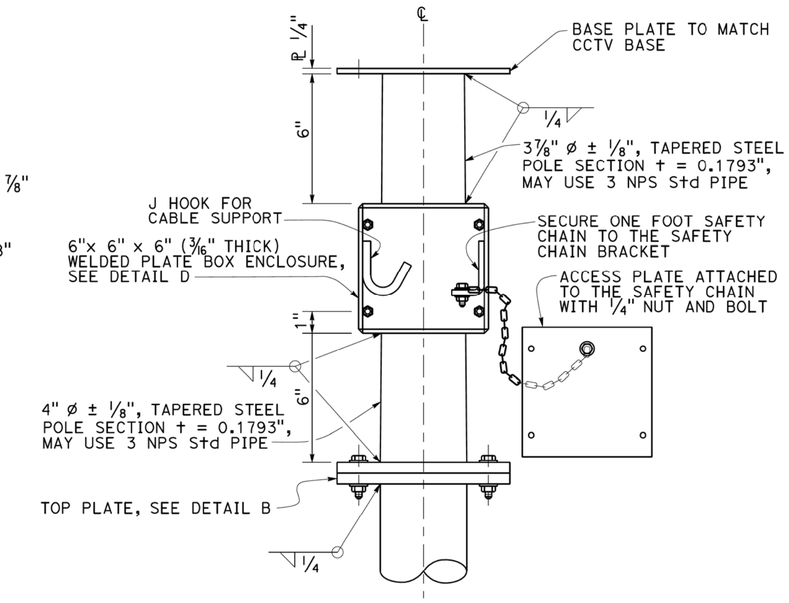

CLOSED CIRCUIT TELEVISION MOUNTING ADAPTER

DETAIL C

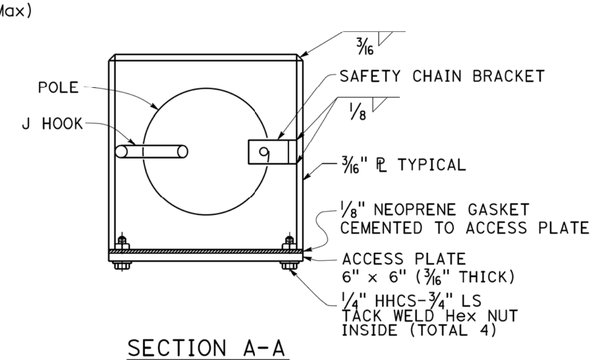

SECTION A-A

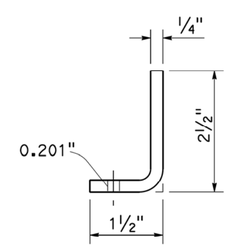

SAFETY CHAIN BRACKET

DETAIL F

NOTES:

1. Verify controlling field dimensions before ordering or fabricating any material.
2. During pole installation, the post shall be raked as necessary with the use of leveling nuts to provide a plumb pole axis.
3. For wind loading see RSP ES-7M.
4. Materials (Structural Steel):
   a. fy = 55,000 psi (tapered steel tube and anchor bolts)
   b. fy = 50,000 psi (unless otherwise noted)
5. Materials (Reinforced Concrete):
   a. f′c = 3,625 psi
   b. fy = 60,000 psi
6. See RSP A77R1 thru RSP A77R8

STATE OF CALIFORNIA
DEPARTMENT OF TRANSPORTATION

ELECTRICAL SYSTEMS (CLOSED CIRCUIT TELEVISION, 25' TO 45' POLE)

NO SCALE

RSP ES-16B DATED JULY 15, 2016 SUPERSEDES RSP ES-16B DATED OCTOBER 30, 2015 AND STANDARD PLAN ES-16B DATED MAY 20, 2011 - PAGE 501 OF THE STANDARD PLANS BOOK DATED 2010.

REVISED STANDARD PLAN RSP ES-16B

2010 REVISED STANDARD PLAN RSP ES-16B

6-20-16

Dist	COUNTY	ROUTE	POST MILES TOTAL PROJECT	SHEET No.	TOTAL SHEETS
04	CC/Mrn	580	5.0/7.8, 0.0/3.3	506	579

REGISTERED CIVIL ENGINEER

July 15, 2016
PLANS APPROVAL DATE

REGISTERED PROFESSIONAL ENGINEER Stanley P. Johnson No. C57793 Exp. 3-31-18 CIVIL STATE OF CALIFORNIA

THE STATE OF CALIFORNIA OR ITS OFFICERS OR AGENTS SHALL NOT BE RESPONSIBLE FOR THE ACCURACY OR COMPLETENESS OF SCANNED COPIES OF THIS PLAN SHEET.

TO ACCOMPANY PLANS DATED _____

POLE TYPE	POLE DATA					BASE PLATE DATA					CIDH PILE DATA	
	HEIGHT "h"	Min OD		THICKNESS BOTTOM SEGMENT (Min 25' LONG)	Min THICKNESS UPPER SEGMENT(S)	Dia	THICKNESS	ANCHOR BOLT SIZE		BC = BOLT CIRCLE	"D"	"L"
		BASE	TOP					TOTAL	"d"			
HM CCTV 50	50'	18"	10⅞"	0.3125"	0.1875"	25"	2"	12	2¼"	20"	3'-6"	13'-0"
HM CCTV 60	60'		9½"									
HM CCTV 70	70'	22"	12"			30"	3"			25"	4'-0"	14'-0"
HM CCTV 80	80'	22"	11⅝"	0.375"	0.25"	33"			3"	27"	4'-6"	
HM CCTV 90	90'	25"	17⅛"			42"				37"	6'-0"	15'-0"

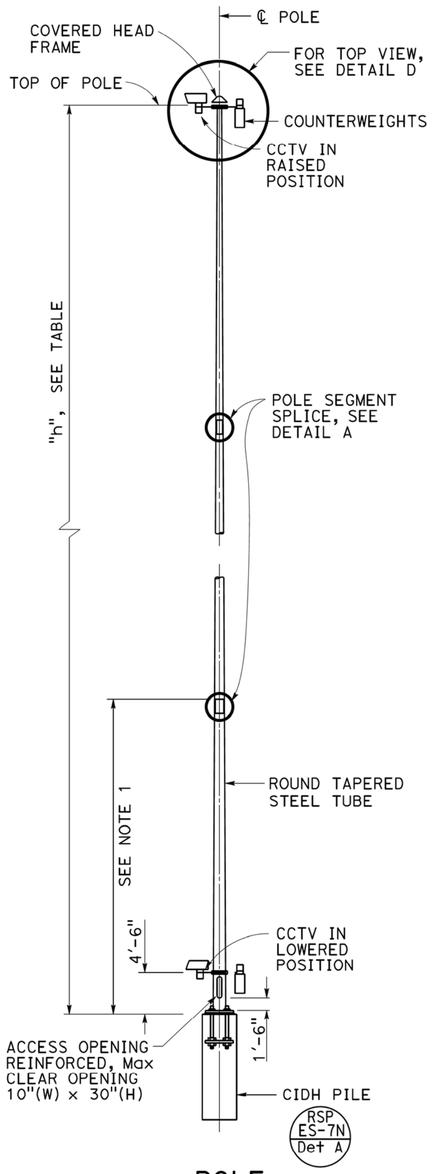

POLE
ELEVATION A

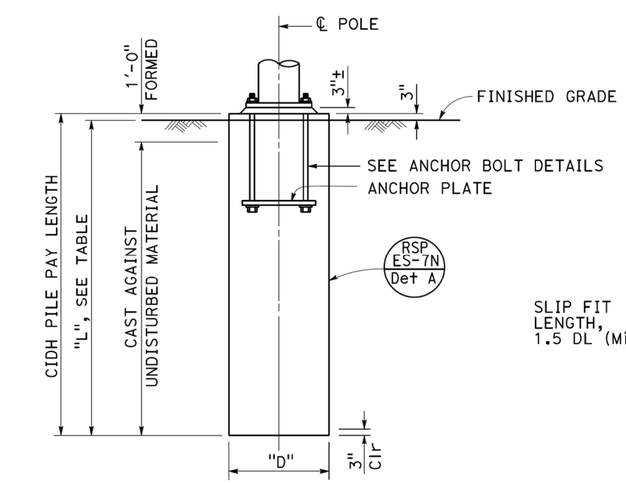

TYPICAL LOCATION
ELEVATION B

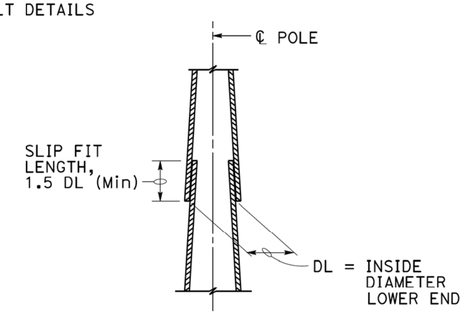

POLE SEGMENT SPLICE
DETAIL A

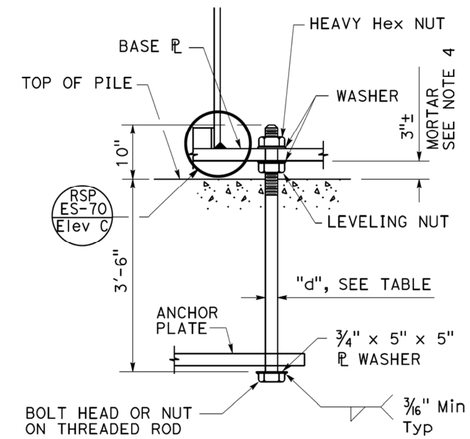

ANCHOR BOLT
DETAIL B

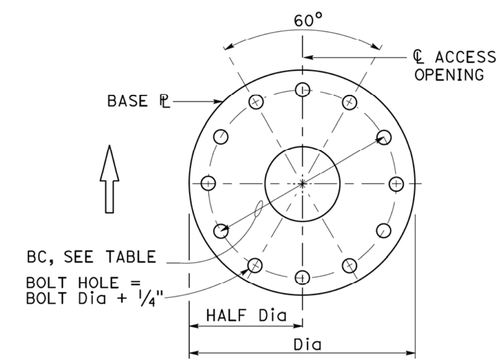

BASE PLATE
DETAIL C

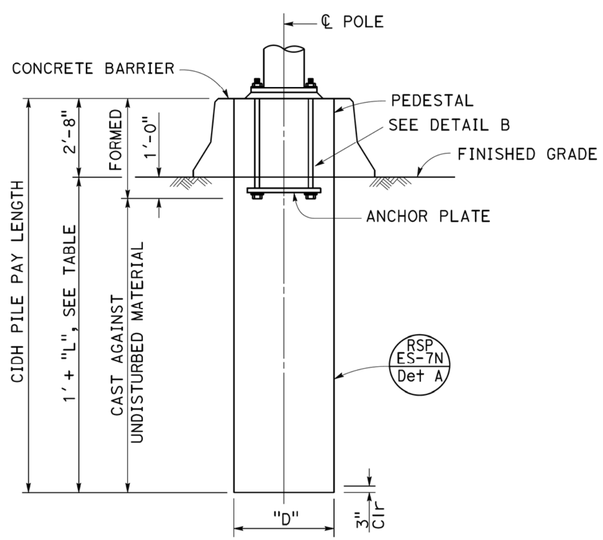

MEDIAN LOCATION
ELEVATION C

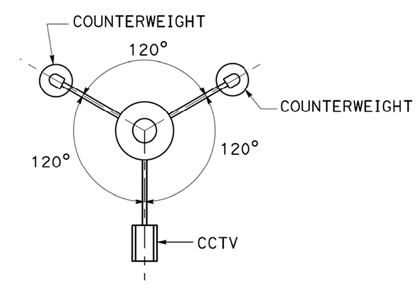

TOP VIEW
DETAIL D

NOTES:

1. Pole details shall suit the lowering device and this foundation plan. Pole details shall be submitted to the Engineer for approval.
2. For closed circuit television details, see Electrical Plans.
3. Foundation design is based on a 3-second wind gust of 100 mph.
4. For central void and drain holes in mortar, see Revised Standard Plan RSP ES-6B detail N.
5. For wind loading see RSP ES-7M.
6. Materials (Structural Steel):
   fy = 55,000 psi (tapered steel tube)
   fy = 50,000 psi (unless otherwise noted)
7. Access opening shall be located on the downstream side of traffic unless otherwise determined by the Engineer.

STATE OF CALIFORNIA
DEPARTMENT OF TRANSPORTATION

ELECTRICAL SYSTEMS (CLOSED CIRCUIT TELEVISION, 50' TO 90' HIGH MAST POLE)

NO SCALE

RSP ES-16C DATED JULY 15, 2016 SUPERSEDES RSP ES-16C DATED OCTOBER 30, 2015 AND STANDARD PLAN ES-16C DATED MAY 20, 2011 - PAGE 502 OF THE STANDARD PLANS BOOK DATED 2010.

REVISED STANDARD PLAN RSP ES-16C

2010 REVISED STANDARD PLAN RSP ES-16C

6-20-16

DIST	COUNTY	ROUTE	POST MILES TOTAL PROJECT	SHEET No	TOTAL SHEETS
04	CC/Mrn	580	5.0/7.8, 0.0/3.3	507	579

REGISTERED CIVIL ENGINEER 7/14/16 DATE

7/26/16
PLANS APPROVAL DATE

REGISTERED PROFESSIONAL ENGINEER E. OKADA No. S4415 Exp. 6-30-18 STRUCTURAL STATE OF CALIFORNIA

The State of California or its officers or agents shall not be responsible for the accuracy or completeness of scanned copies of this plan sheet.

HNTB CORPORATION
1111 BROADWAY
9TH FLOOR
OAKLAND, CA 94607

BAY AREA TOLL AUTHORITY
375 BEALE STREET, SUITE 800
SAN FRANCISCO, CA 94105

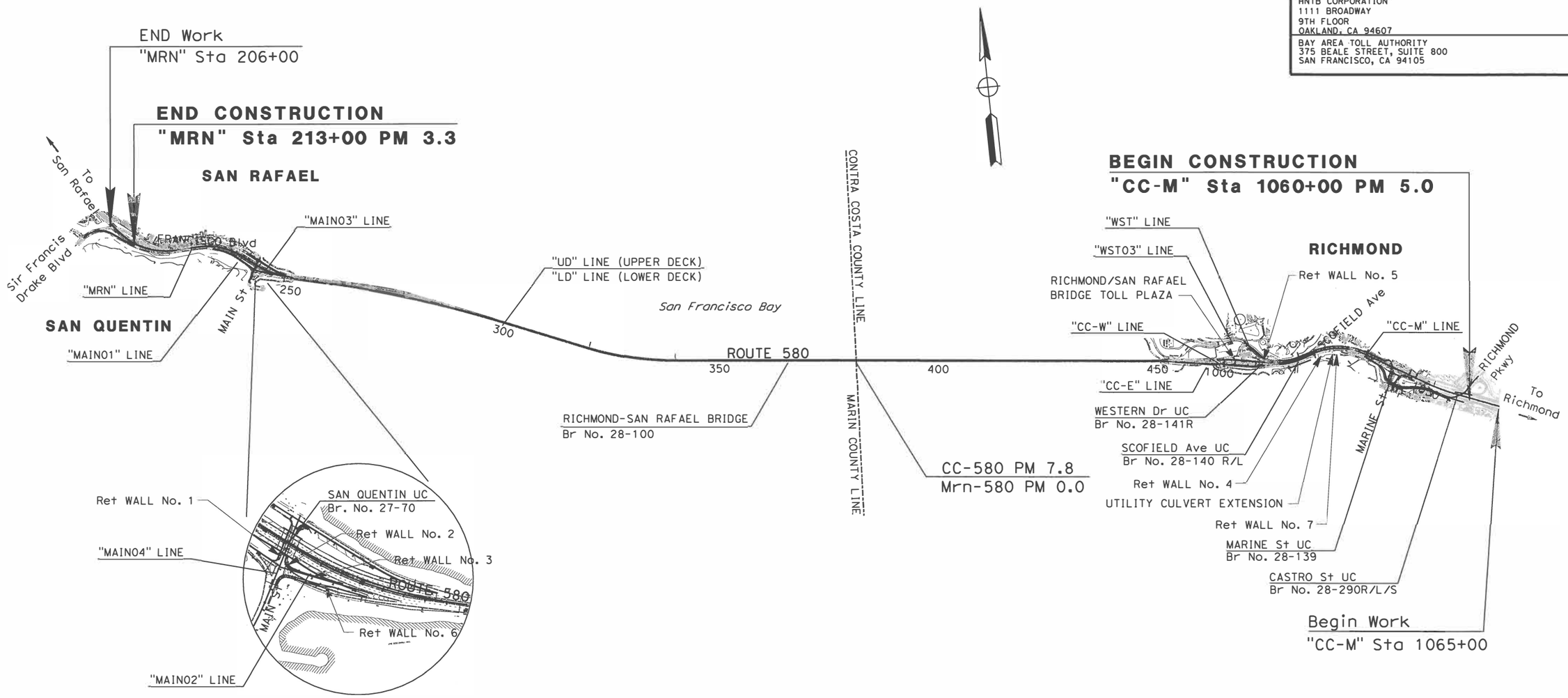

NO SCALE

DESIGN OVERSIGHT
7/14/16
SIGN OFF DATE

	BY	CHECKED
DESIGN	E. Okada	M. Vargas
DETAILS	H. Li	E. Okada
QUANTITIES	E. Okada	M. Vargas

PREPARED FOR THE STATE OF CALIFORNIA DEPARTMENT OF TRANSPORTATION

Erik Okada
PROJECT ENGINEER

BRIDGE NO. VARIES
POST MILES 5.0/7.8, 0.0/3.3

RETAINING WALLS
KEY MAP AND LINE INDEX

DESIGN DETAIL SHEET (ENGLISH) (REV. 03/14/12)

ORIGINAL SCALE IN INCHES FOR REDUCED PLANS 0 1 2 3

UNIT: 0000
PROJECT NUMBER & PHASE: 04140005521
CONTRACT NO.: 04-2J6804

DISREGARD PRINTS BEARING EARLIER REVISION DATES

REVISION DATES

SHEET 1 OF 33

FILE => 001-28-0100-a-map.dgn

USERNAME => $USER$ DATE PLOTTED => $DATE$ TIME PLOTTED => $TIME$

DIST	COUNTY	ROUTE	POST MILES TOTAL PROJECT	SHEET No	TOTAL SHEETS
04	CC/Mrn	580	5.0/7.8, 0.0/3.3	508	579

REGISTERED CIVIL ENGINEER DATE 7/14/16

7/26/16
PLANS APPROVAL DATE

REGISTERED PROFESSIONAL ENGINEER E. OKADA No. S4415 Exp. 6-30-18 STRUCTURAL STATE OF CALIFORNIA

The State of California or its officers or agents shall not be responsible for the accuracy or completeness of scanned copies of this plan sheet.

HNTB CORPORATION
1111 BROADWAY
9TH FLOOR
OAKLAND, CA 94607

BAY AREA TOLL AUTHORITY
375 BEALE STREET, SUITE 800
SAN FRANCISCO, CA 94105

GENERAL NOTES

RETAINING WALLS

Including Wall No. 1, No. 2, No. 3 and No. 6.

DESIGN:
1. AASHTO LRFD Bridge Design Specifications, 6th Edition with California Amendments.

REINFORCED CONCRETE:
f'c = 4000 psi, Unless Otherwise Noted
fy = 60 ksi

SOIL NAIL WALLS

Including Wall No. 4, No. 5 and No. 7.

DESIGN:

1. "Manual for Design and Construction Monitoring of Soil Nail Walls" publication No. FHWA-SA-96-069A.
2. "Geotechnical Engineering circular No.7-Soil Nail Walls FHWA-NHI-14-007.

GROUT:
f'c = 3000 psi at 28 days, ASTM C109

REINFORCED CONCRETE AND REINFORCED SHOTCRETE:
f'c = 4000 psi at 28 days
fy = 60 ksi (rebar)
fy = 65 ksi (WWF)

STRUCTURAL STEEL (BEARING PLATES):
fy = 50 ksi, ASTM A572

SOIL NAILS:
fy = 60 ksi, ASTM A615 or ASTM 706 GRADE 60

HEADED STUDS:
fy = 55 ksi, ASTM A108

STANDARD PLAN SHEET NO.

DETAIL NO.

INDEX OF DRAWINGS

SHEET NO.	DESCRIPTION
1	KEY MAP AND LINE INDEX
2	INDEX AND GENERAL NOTES
3	RETAINING WALL NO. 1 - PLAN AND ELEVATION
4	RETAINING WALL NO. 2 - PLAN AND ELEVATION
5	RETAINING WALL NO. 3 - PLAN AND ELEVATION
6	RETAINING WALL NO. 4 - PLAN AND ELEVATION
7	RETAINING WALL NO. 4 - SOIL NAIL LAYOUT 1
8	RETAINING WALL NO. 4 - SOIL NAIL LAYOUT 2
9	RETAINING WALL NO. 4 - SOIL NAIL DETAILS 1
10	RETAINING WALL NO. 4 - SOIL NAIL DETAILS 2
11	RETAINING WALL NO. 4 - WALL DRAIN DETAILS
12	RETAINING WALL NO. 4 - WALL DETAILS
13	RETAINING WALL NO. 4 - TEMPORARY SHORING
14	RETAINING WALL NO. 5 - PLAN AND ELEVATION
15	RETAINING WALL NO. 5 - SOIL NAIL LAYOUT 1
16	RETAINING WALL NO. 5 - SOIL NAIL LAYOUT 2
17	RETAINING WALL NO. 5 - SOIL NAIL DETAILS 1
18	RETAINING WALL NO. 5 - SOIL NAIL DETAILS 2
19	RETAINING WALL NO. 5 - WALL DRAIN DETAILS
20	RETAINING WALL NO. 6 - PLAN AND ELEVATION NO. 1
21	RETAINING WALL NO. 6 - PLAN AND ELEVATION NO. 2
22	RETAINING WALL NO. 6 - FOUNDATION PLAN
23	RETAINING WALL NO. 6 - DETAILS
24	RETAINING WALL NO. 7 - PLAN AND ELEVATION
25	RETAINING WALL NO. 7 - SOIL NAIL LAYOUT
26	RETAINING WALL NO. 7 - SOIL NAIL DETAILS 1
27	RETAINING WALL NO. 7 - SOIL NAIL DETAILS 2
28	RETAINING WALL NO. 7 - WALL DRAIN DETAILS
29	RETAINING WALL NO. 7 - TEMPORARY SHORING
30	RETAINING WALL - DETAILS
31	RETAINING WALL - DRAIN DETAILS NO. 1
32	RETAINING WALL - DRAIN DETAILS NO. 2
33	RETAINING WALL - CONCRETE BARRIER TYPE 60C (MOD)

ARCHITECTURAL TREATMENT

1	RETAINING WALL DETAILS R-1
2	RETAINING WALL DETAILS R-2
3	RETAINING WALL DETAILS R-3
4	RETAINING WALL DETAILS R-4
5	RETAINING WALL DETAILS R-5
6	RETAINING WALL DETAILS R-6
5	RETAINING WALL DETAILS R-7
8	RETAINING WALL DETAILS R-8

CALTRANS STANDARD PLANS DATED 2010

	A10A	ABBREVIATIONS (SHEET 1 OF 2)
RSP	A10B	ABBREVIATIONS (SHEET 2 OF 2)
	A10C	LINES AND SYMBOLS (SHEET 1 OF 3)
	A10D	LINES AND SYMBOLS (SHEET 2 OF 3)
	A10E	LINES AND SYMBOLS (SHEET 3 OF 3)
	A10F	LEGEND - SOIL (SHEET 1 OF 2)
	A10G	LEGEND - SOIL (SHEET 2 OF 2)
	A10H	LEGEND - ROCK
	A62B	LIMITS OF PAYMENT FOR EXCAVATION AND BACK FILL BRIDGE STRUCTURE AND WALL
	A76A	CONCRETE BARRIER TYPE 60
	A76G	CONCRETE BARRIER TYPE 60S
	B0-3	BRIDGE DETAILS
	B2-8	PILE DETAILS CLASS 200
RSP	B3-5	RETAINING WALL DETAILS NO. 1
	B3-6	RETAINING WALL DETAILS NO. 2
RSP	B11-47	CABLE RAILING
RSP	B11-55	CONCRETE BARRIER TYPE 732
	ES-9B	ELECTRICAL SYSTEMS (CONDUIT RISER AND EXPANSION FITTING, STRUCTURE INSTALLATIONS)

ABBREVIATIONS

See Standard Plans A10A and A10B for additional abbreviations.

BENCH MARK:

BASIS OF ELEVATIONS:

NORTH AMERICAN VERTICAL DATUM OF 1988 (NAVD88)
THE ELEVATION SHOWN ARE FROM SURVEY REQUEST.
01-14 NSV 1078

BASIS OF BEARINGS AND HORIZONTAL DATUMS:

THE HORIZONTAL COORDINATE VALUES ARE IN THE CALIFORNIA COORDINATE SYSTEM (CCS83) ZONE 3 (U. S. SURVEY FEET) AND BASED ON THE NORTH AMERICAN DATUM OF 1983 AS ADJUSTED TO THE CALIFORNIA HIGH PRECISION NETWORK (HPGN) 92, EPOCH 2010.00.

CONTROL FOR DESIGN AND CONSTRUCTION

STATION DESIGNATION	ORDER	NORTHING	EASTING	ELEVATION	DESCRIPTION
501	'B'	2181074.73	6031018.14	52.46	DISC STAMPED "PT 01 LS5692,1990"
504	'B'	2156450.27	6036578.47	22.14	DISC STAMPED "PT 01 LS5692,1990"
554	'B'	2167909.39	6019244.47	10.37	DISC STAMPED "NO. 54 2000"
951	'B'	2180289.29	5980920.41	9.54	DISC STAMPED "NO. 17 1951"
1067	'B'	2142933.46	5986280.50	11.71	DISC STAMPED "32 1948"

For additional information, see CIVIL PLANS.

DESIGN OVERSIGHT
7/14/16
SIGN OFF DATE

	BY	CHECKED
DESIGN	E. Okada	M. Vargas
DETAILS	W. Li	E. Okada
QUANTITIES	E. Okada	M. Vargas

PREPARED FOR THE STATE OF CALIFORNIA DEPARTMENT OF TRANSPORTATION

Erik Okada
PROJECT ENGINEER

BRIDGE NO. VARIES
POST MILES 5.0/7.8 0.0/3.3

RETAINING WALLS
INDEX AND GENERAL NOTES

DESIGN DETAIL SHEET (ENGLISH) (REV. 03/14/12)

ORIGINAL SCALE IN INCHES FOR REDUCED PLANS 0 1 2 3

UNIT: 0000
PROJECT NUMBER & PHASE: 04140005521 CONTRACT NO.: 04-2J6804

DISREGARD PRINTS BEARING EARLIER REVISION DATES

REVISION DATES

SHEET 2 OF 33

FILE => 002-28-0100-a-itp01-D.dgn

USERNAME => null DATE PLOTTED => 7/14/2016 TIME PLOTTED => 10:26:02 AM

DIST	COUNTY	ROUTE	POST MILES TOTAL PROJECT	SHEET No	TOTAL SHEETS
04	CC/Mrn	580	5.0/7.8, 0.0/3.3	509	579

REGISTERED CIVIL ENGINEER 7/14/16 DATE

7/26/16
PLANS APPROVAL DATE

REGISTERED PROFESSIONAL ENGINEER E. OKADA No. S4415 Exp. 6-30-18 STRUCTURAL STATE OF CALIFORNIA

The State of California or its officers or agents shall not be responsible for the accuracy or completeness of scanned copies of this plan sheet.

HNTB CORPORATION
1111 BROADWAY
9TH FLOOR
OAKLAND, CA 94607

BAY AREA TOLL AUTHORITY
375 BEALE STREET, SUITE 800
SAN FRANCISCO, CA 94105

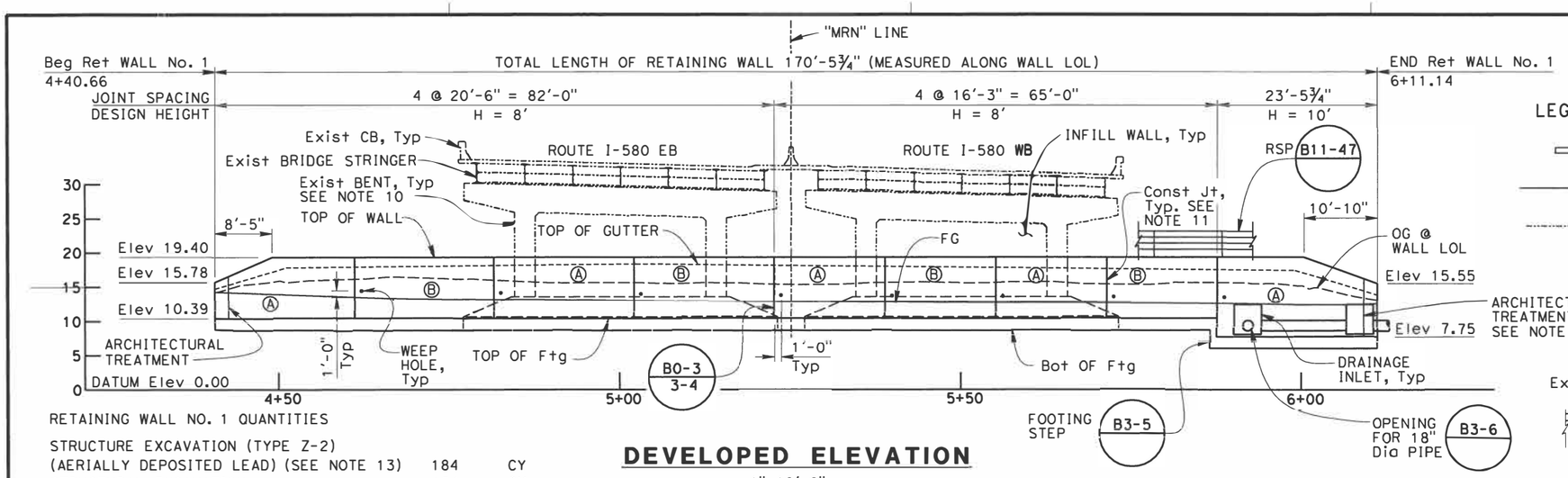

DEVELOPED ELEVATION

1"=10'-0"

RETAINING WALL NO. 1 QUANTITIES

STRUCTURE EXCAVATION (TYPE Z-2) (AERIALLY DEPOSITED LEAD) (SEE NOTE 13)	184	CY
STRUCTURAL EXCAVATION	154	CY
STRUCTURE BACKFILL (RETAINING WALL)	95	CY
STRUCTURAL CONCRETE, RETAINING WALL	178	CY
BAR REINFORCING STEEL (RETAINING WALL)	21,926	LB
MINOR CONCRETE (GUTTER)	170	LF
GEOCOMPOSITE DRAIN	443	SQFT
CABLE RAILING	170	LF
LEAN CONCRETE BASE	84	CY
ARCHITECTURAL TREATMENT	1,558	SQFT

LEGEND:

- INDICATES DIRECTION OF TRAFFIC
- CONCRETE RETAINING WALL
- EXISTING STRUCTURE

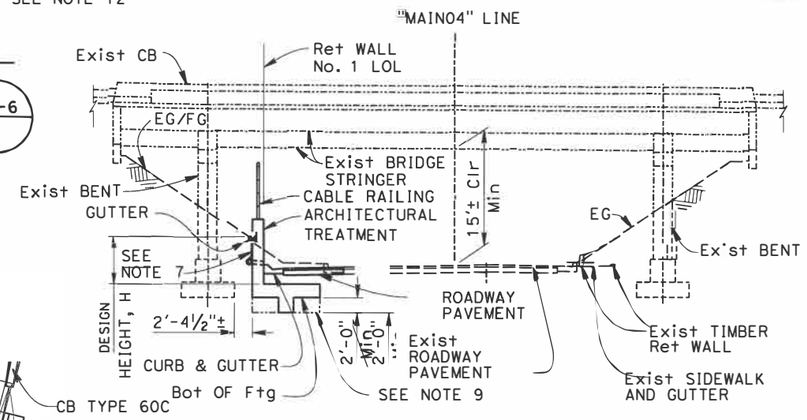

TYPICAL SECTION

NO SCALE

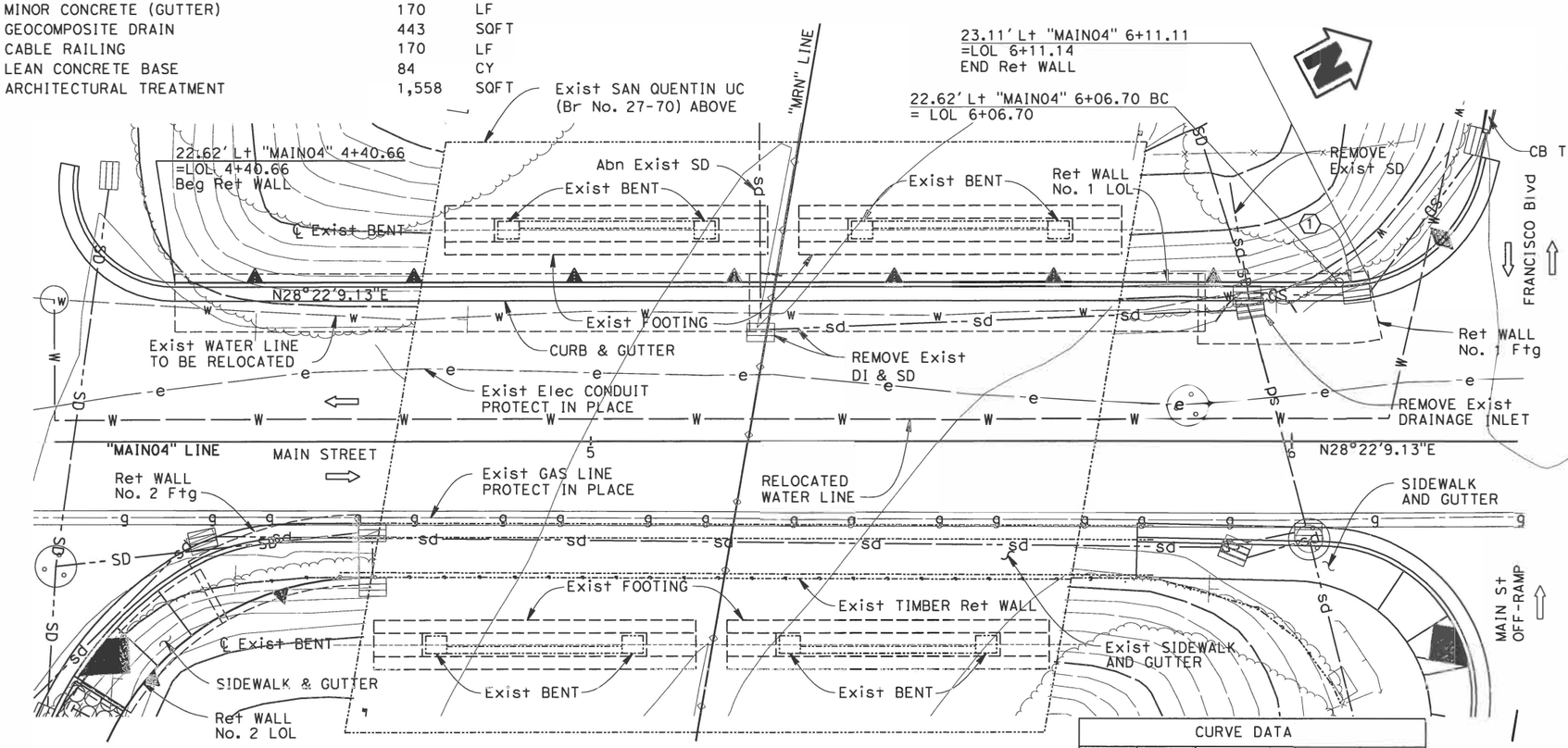

PLAN

1"=10'-0"

CURVE DATA

No.	R	Δ	T	L
1	20.38'	12°28'32"	2.23'	4.4'

NOTES:

1. For roadway information see "ROADWAY PLANS".
2. For utility information see "UTILITY PLANS".
3. For drainage information see "DRAINAGE PLANS".
4. For wall stem joint details see 2010 Standard Plan B0-3.
5. Controlling field conditions to be verified prior to start of construction.
6. For wall details not shown see 2010 Standard Plans B3-5 and B3-6, and sheet "RETAINING WALL - DETAILS.
7. For weephole and wall drain details, see sheet "RETAINING WALL - DRAIN DETAILS".
8. For cable railing, see 2010 Standard Plan RSP B11-47.
9. Over excavate existing soil and replace with lean concrete base.
10. The existing bents and footings shall be protected during construction. See required construction sequence.
11. For construction joint details, see "CONSTRUCTION JOINT DETAIL" on "RETAINING WALL DETAILS" sheet.
12. For architectural treatment, see "ARCHITECTURAL PLANS".
13. For Limits Of Payment see "RETAINING WALL - DETAILS" Sheet.

REQUIRED CONSTRUCTION SEQUENCE

1. Excavate soil in retaining wall sections (A)
2. Form and construct shear key
3. Replace soil with lean concrete base
4. Form and construct footing and walls
5. Backfill
6. Excavate soil in retaining wall sections (B)
7. Form and construct shear key
8. Replace soil with lean concrete base
9. Form and construct footing and walls
10. Backfill

DESIGN OVERSIGHT 7/14/16 SIGN OFF DATE	DESIGN	BY G. Iwamoto	CHECKED G. Yu	LOAD & RESISTANCE FACTOR DESIGN	LIVE LOADING: HL-93
	DETAILS	BY H. Paige	CHECKED G. Yu	LAYOUT BY H. Paige	CHECKED G. Iwamoto
	QUANTITIES	BY G. Iwamoto	CHECKED G. Yu	SPECIFICATIONS BY D. Desai	PLANS AND SPECS COMPARED D. Desai

PREPARED FOR THE STATE OF CALIFORNIA DEPARTMENT OF TRANSPORTATION

Erik Okada
PROJECT ENGINEER

BRIDGE NO. 27E0068
POST MILES 2.63

RETAINING WALL NO. 1
PLAN AND ELEVATION

DESIGN GENERAL PLAN SHEET (ENGLISH) (REV. 06-01-09)

ORIGINAL SCALE IN INCHES FOR REDUCED PLANS 0 1 2 3

UNIT: 0000
PROJECT NUMBER & PHASE: 04140005521

DISREGARD PRINTS BEARING EARLIER REVISION DATES

REVISION DATES (PRELIMINARY STAGE ONLY)

SHEET 3 OF 33

FILE => 003-27-0070-a-rw 1o01.dgn

USERNAME => nuttt DATE PLOTTED => 7/14/2016 TIME PLOTTED => 10:26:04 AM

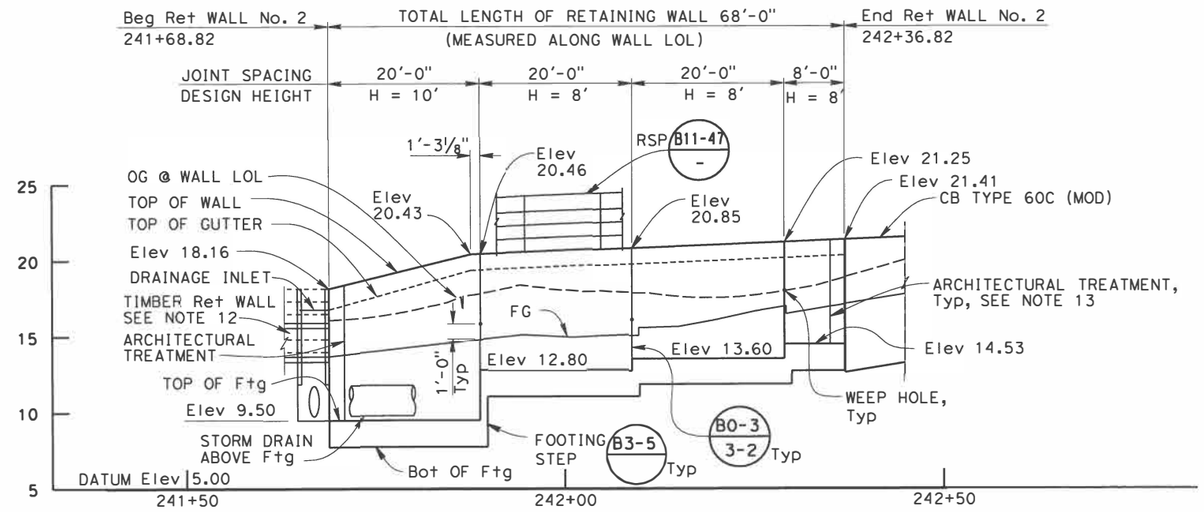

DEVELOPED ELEVATION

Horiz. 1"=10'-0"
Vert. 1"=5'-0"

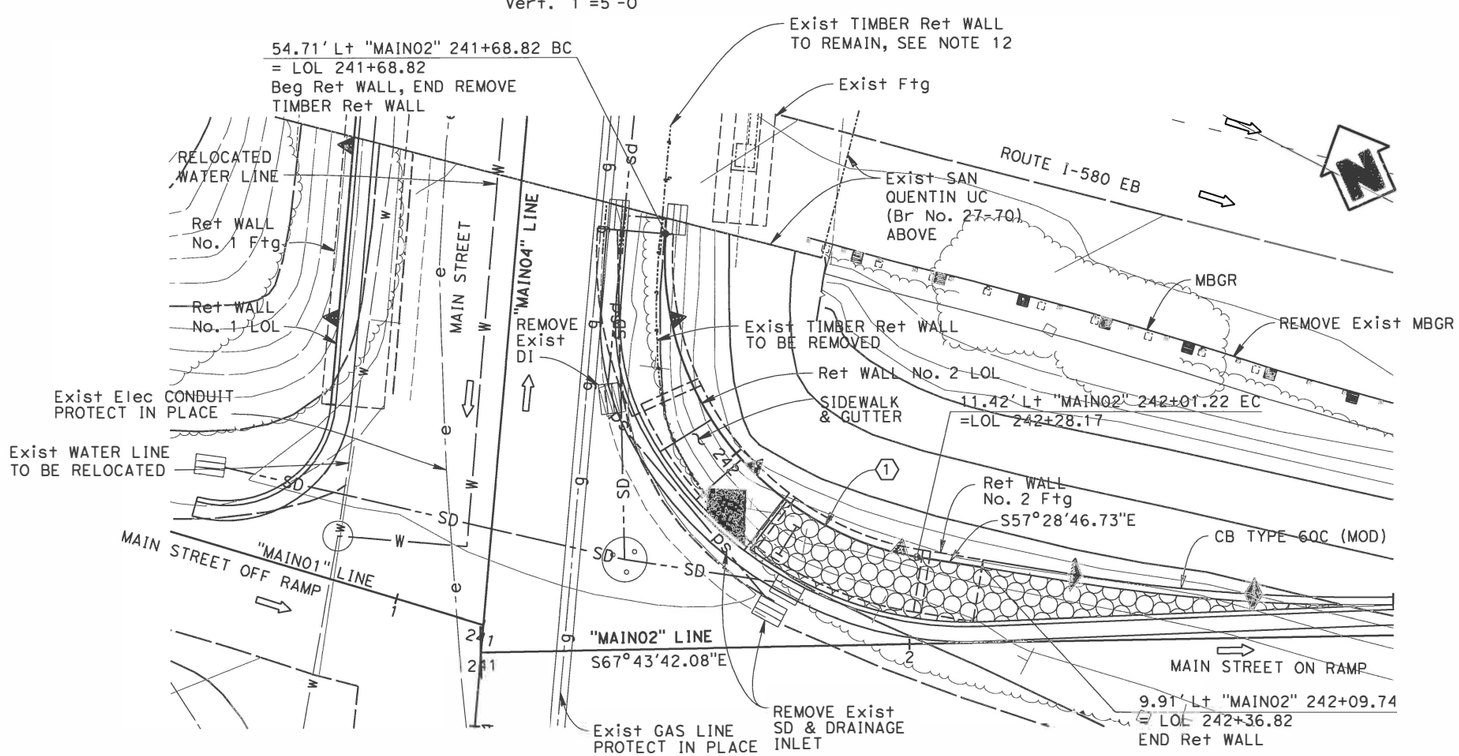

PLAN

1"=10'-0"

CURVE DATA				
No.	R	Δ	T	L
1	40'	85°01'00"	36.66'	59.35'

RETAINING WALL NO. 2 QUANTITIES

STRUCTURE EXCAVATION (TYPE Z-2) (AERIALLY DEPOSITED LEAD) (SEE NOTE 14)	113	CY
STRUCTURAL EXCAVATION	59	CY
STRUCTURE BACKFILL (RETAINING WALL)	72	CY
STRUCTURAL CONCRETE (RETAINING WALL)	71	CY
BAR REINFORCING STEEL (RETAINING WALL)	8,794	LB
MINOR CONCRETE (GUTTER)	68	LF
GEOCOMPOSITE DRAIN	95	SQFT
CABLE RAILING	68	LF
LEAN CONCRETE BASE	34	CY
REMOVE RETAINING WALL (WOOD)	45	LF
TIMBER RETAINING WALL	35	SQFT
TREATED WOOD WASTE	1,000	LB
ARCHITECTURAL TREATMENT	558	SQFT

DIST	COUNTY	ROUTE	POST MILES TOTAL PROJECT	SHEET No	TOTAL SHEETS
04	CC/Mrn	580	5.0/7.8, 0.0/3.3	510	579

REGISTERED CIVIL ENGINEER — DATE 7/14/16

PLANS APPROVAL DATE 7/26/16

REGISTERED PROFESSIONAL ENGINEER — E. OKADA — No. S4415 — Exp. 6-30-18 — STRUCTURAL — STATE OF CALIFORNIA

The State of California or its officers or agents shall not be responsible for the accuracy or completeness of scanned copies of this plan sheet.

HNTB CORPORATION
1111 BROADWAY
9TH FLOOR
OAKLAND, CA 94607

BAY AREA TOLL AUTHORITY
375 BEALE STREET, SUITE 800
SAN FRANCISCO, CA 94105

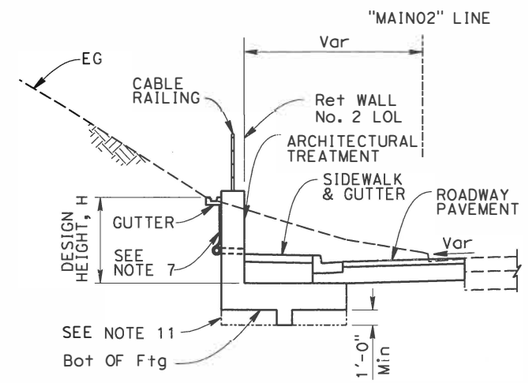

TYPICAL SECTION

NO SCALE

NOTES:

1. For roadway information see "ROADWAY PLANS".
2. For utility information see "UTILITY PLANS".
3. For drainage information see "DRAINAGE PLANS".
4. For wall stem joint details see 2010 Standard Plan B0-3.
5. Controlling field conditions to be verified prior to start of construction.
6. For wall details not shown see 2010 Standard Plans B3-5 and B3-6, and sheet "RETAINING WALL - DETAILS".
7. For weephole and wall drain details see sheet "RETAINING WALL - DRAIN DETAILS".
8. For cable railing, see 2010 Standard Plan RSP B11-47.
9. Location of existing conduit to be determined.
10. For barrier type 60C (MOD) details, see sheet "CONCRETE BARRIER TYPE 60C (MOD)".
11. Over excavate existing soil and replace with lean concrete base.
12. See "TIMBER WALL DETAIL" on "RETAINING WALL - DETAILS" sheet.
13. For architectural treatment, see "ARCHITECTURAL PLANS".
14. For Limits Of Payment see "RETAINING WALL - DETAILS" Sheet.

LEGEND:

- INDICATES DIRECTION OF TRAFFIC
- CONCRETE RETAINING WALL
- EXISTING STRUCTURE
- CONCRETE BARRIER

DESIGN OVERSIGHT 7/14/16 SIGN OFF DATE	DESIGN	BY G. Iwamoto	CHECKED G. Yu	LOAD & RESISTANCE FACTOR DESIGN	LIVE LOADING: HL-93
	DETAILS	BY H. Paige	CHECKED G. Yu	LAYOUT BY H. Paige	CHECKED G. Yu
	QUANTITIES	BY G. Iwamoto	CHECKED G. Yu	SPECIFICATIONS BY D. Desai	PLANS AND SPECS COMPARED D. Desai

DESIGN GENERAL PLAN SHEET (ENGLISH) (REV. 06-01-09)

ORIGINAL SCALE IN INCHES FOR REDUCED PLANS 0 1 2 3

PREPARED FOR THE STATE OF CALIFORNIA DEPARTMENT OF TRANSPORTATION

Erik Okada
PROJECT ENGINEER

UNIT: 0000
PROJECT NUMBER & PHASE: 04140005521

BRIDGE NO. 27E0069
POST MILES 2.63

RETAINING WALL NO. 2
PLAN AND ELEVATION

DISREGARD PRINTS BEARING EARLIER REVISION DATES

REVISION DATES (PRELIMINARY STAGE ONLY)

SHEET 4 OF 33

FILE => 004-28-0100r-a-rw 1o02.dgn

USERNAME => hu111 DATE PLOTTED => 7/14/2016 TIME PLOTTED => 10:26:06 AM

DIST	COUNTY	ROUTE	POST MILES TOTAL PROJECT	SHEET No	TOTAL SHEETS
04	CC/Mrn	580	5.0/7.8, 0.0/3.3	511	579

REGISTERED CIVIL ENGINEER 7/14/16 DATE

7/26/16
PLANS APPROVAL DATE

REGISTERED PROFESSIONAL ENGINEER E. OKADA No. S4415 Exp. 6-30-18 STRUCTURAL STATE OF CALIFORNIA

The State of California or its officers or agents shall not be responsible for the accuracy or completeness of scanned copies of this plan sheet.

HNTB CORPORATION
1111 BROADWAY
9TH FLOOR
OAKLAND, CA 94607

BAY AREA TOLL AUTHORITY
375 BEALE STREET, SUITE 800
SAN FRANCISCO, CA 94105

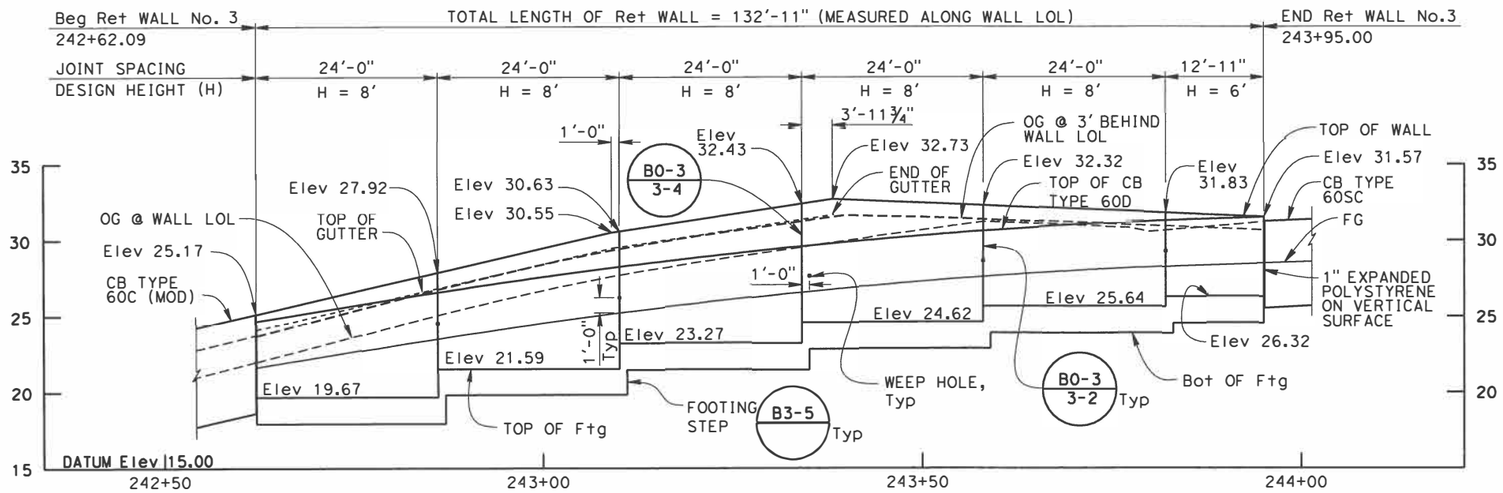

ELEVATION

Horiz. 1"=10'-0"
Vert. 1"=5'-0"

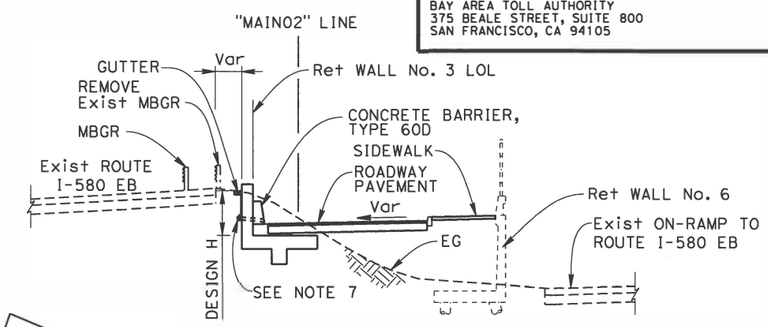

TYPICAL SECTION

NO SCALE

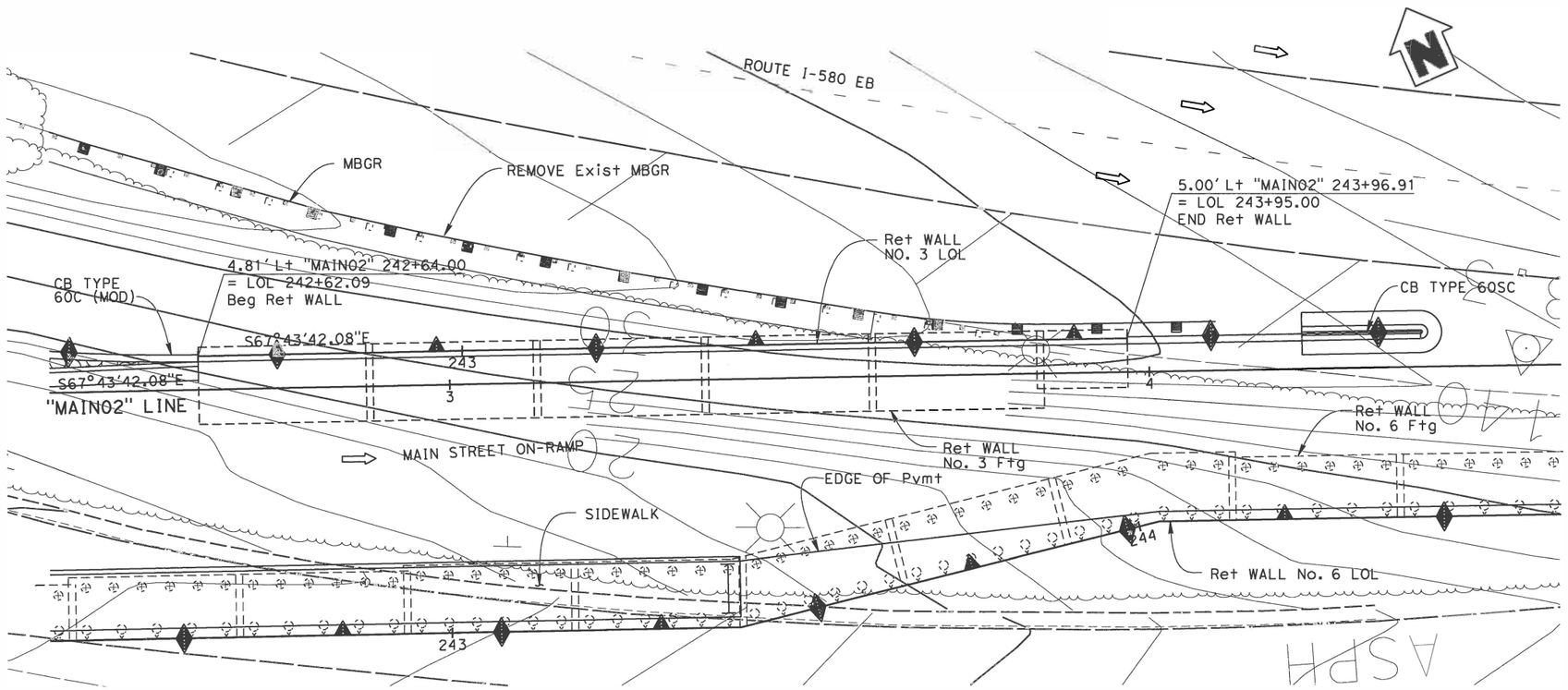

PLAN

1"=10'-0"

NOTES:

1. For roadway information see "ROADWAY PLANS".
2. For utility information see "UTILITY PLANS".
3. For drainage information see "DRAINAGE PLANS".
4. For wall stem joint details see 2010 Standard Plan B0-3.
5. Controlling field conditions to be verified prior to start of construction.
6. For wall details not shown see 2010 Standard Plans B3-5 and B3-6, and sheet "RETAINING WALL - DETAILS".
7. For weephole and wall drain details see sheet "RETAINING WALL - DRAIN DETAILS".
8. For barrier type 60C (MOD) details, see sheet "CONCRETE BARRIER TYPE 60C (MOD)".

LEGEND:

- INDICATES DIRECTION OF TRAFFIC
- CONCRETE RETAINING WALL
- CONCRETE BARRIER
- CONCRETE RETAINING WALL WITH CONCRETE BARRIER

RETAINING WALL NO. 3 QUANTITIES

STRUCTURE EXCAVATION (RETAINING WALL)	305	CY
STRUCTURE BACKFILL (RETAINING WALL)	58	CY
STRUCTURAL CONCRETE (RETAINING WALL)	150	CY
BAR REINFORCING STEEL (RETAINING WALL)	19,924	LB
MINOR CONCRETE (GUTTER)	76	LF
GEOCOMPOSITE DRAIN	91	SQFT
CONCRETE BARRIER (TYPE 60D)	133	LF

DESIGN OVERSIGHT 7/14/16 SIGN OFF DATE

	BY	CHECKED
DESIGN	G. Iwamoto	G. Yu
DETAILS	H. Paige	G. Yu
QUANTITIES	G. Iwamoto	G. Yu

LOAD & RESISTANCE FACTOR DESIGN — LIVE LOADING: HL-93

	BY	CHECKED
LAYOUT	H. Paige	G. Yu
SPECIFICATIONS	D. Desai	PLANS AND SPECS COMPARED D. Desai

PREPARED FOR THE STATE OF CALIFORNIA DEPARTMENT OF TRANSPORTATION

Erik Okada
PROJECT ENGINEER

BRIDGE NO. 27E0070
POST MILES 2.54

RETAINING WALL NO. 3
PLAN AND ELEVATION

DESIGN GENERAL PLAN SHEET (ENGLISH) (REV. 06-01-09)

ORIGINAL SCALE IN INCHES FOR REDUCED PLANS 0 1 2 3

UNIT: 0000
PROJECT NUMBER & PHASE: 04140005521

DISREGARD PRINTS BEARING EARLIER REVISION DATES

REVISION DATES (PRELIMINARY STAGE ONLY)

SHEET 5 OF 33

FILE => 005-28-0100r-a-rw_1a03.dgn

USERNAME => \null

DATE PLOTTED => 7/14/2016 TIME PLOTTED => 11:54:31 AM

RETAINING WALL NO. 4 QUANTITIES		
STRUCTURE EXCAVATION (TYPE Z-2) (AERIALLY DEPOSITED LEAD)	813	CY
STRUCTURE EXCAVATION (SOIL NAIL WALL)	6,576	CY
STRUCTURE BACKFILL (SOIL NAIL WALL)	76	CY
STRUCTURAL SHOTCRETE	146	CY
STRUCTURAL CONCRETE (RETAINING WALL)	450	CY
BAR REINFORCING STEEL (RETAINING WALL)	51,520	LB
SOIL NAIL	22,705	LF
SOIL NAIL (TEMPORARY)	2,750	LF
REMOVE RETAINING WALL	598	CY
MINOR CONCRETE (GUTTER)	527	LF
GEOCOMPOSITE DRAIN	2,650	SF
CABLE RAILING	546	LF
CONCRETE BARRIER (TYPE 60D)	520	LF
ARCHITECTURAL TREATMENT	18,214	SQFT

DIST	COUNTY	ROUTE	POST MILES TOTAL PROJECT	SHEET No	TOTAL SHEETS
04	CC/Mrn	580	5.0/7.8, 0.0/3.3	512	579

REGISTERED CIVIL ENGINEER — DATE 7/14/16

7/26/16
PLANS APPROVAL DATE

REGISTERED PROFESSIONAL ENGINEER — E. OKADA — No. S4415 — Exp. 6-30-18 — STRUCTURAL — STATE OF CALIFORNIA

The State of California or its officers or agents shall not be responsible for the accuracy or completeness of scanned copies of this plan sheet.

HNTB CORPORATION
1111 BROADWAY
9TH FLOOR
OAKLAND, CA 94607

BAY AREA TOLL AUTHORITY
375 BEALE STREET, SUITE 800
SAN FRANCISCO, CA 94105

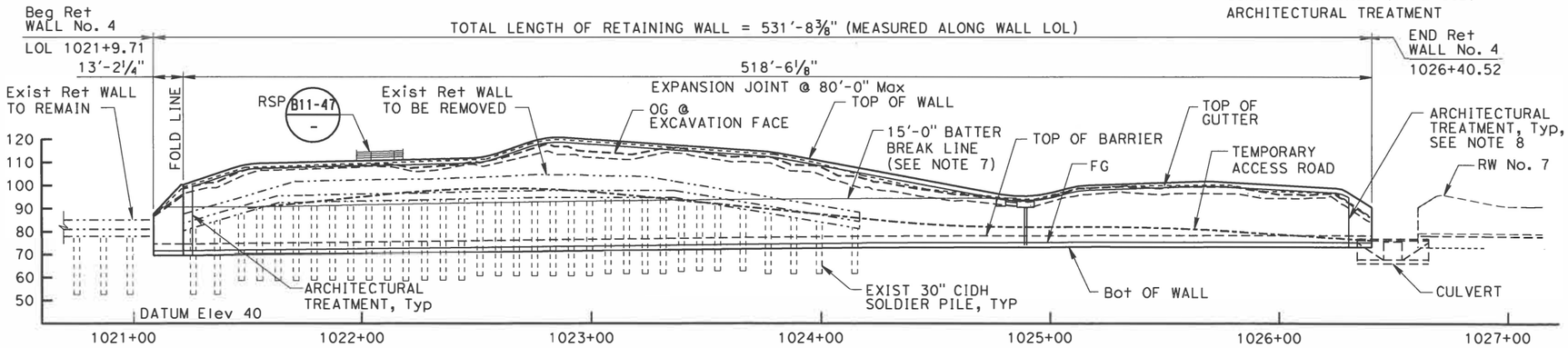

DEVELOPED ELEVATION
1"=30'-0"

LEGEND:

INDICATES DIRECTION OF TRAFFIC

CONCRETE RETAINING WALL

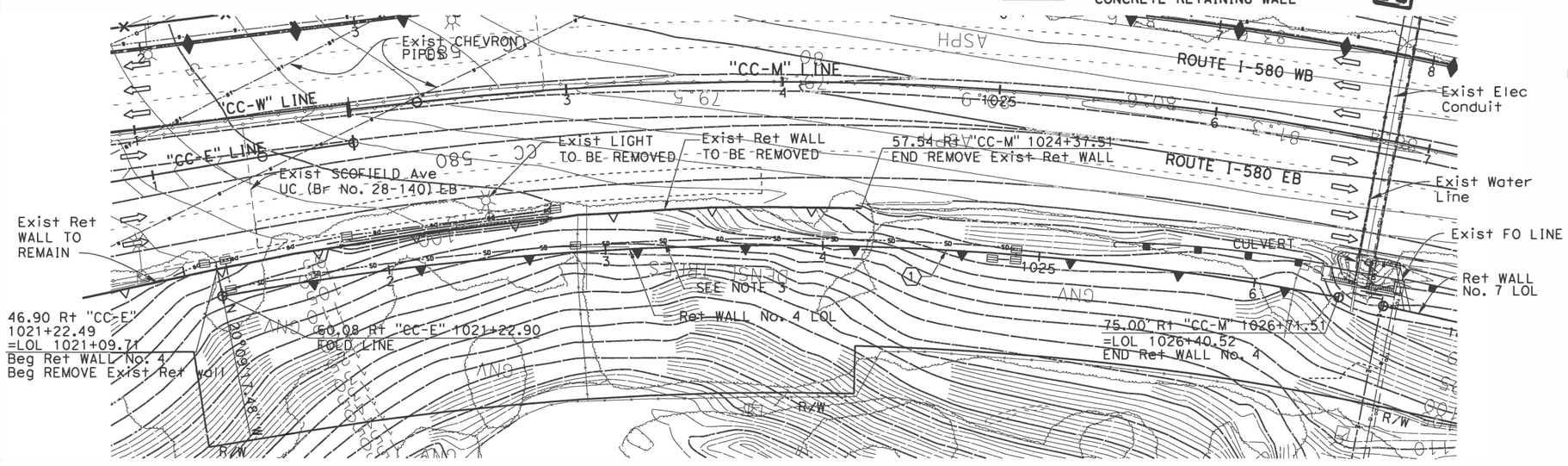

PLAN
1"=30'-0"

CURVE DATA				
No.	R	Δ	T	L
1	1425.26'	20°48'42"	261.69'	517.61'

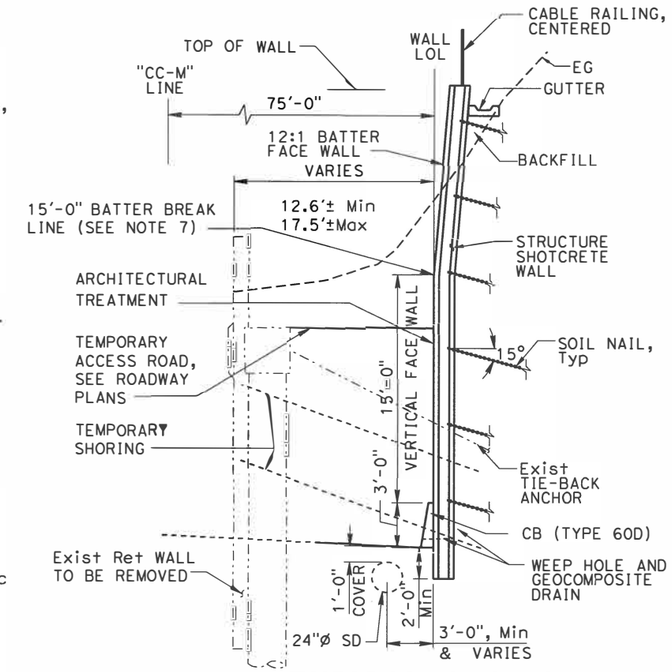

TYPICAL SECTION
NO SCALE

NOTES:

1. For roadway information see "ROADWAY PLANS".
2. For utility information see "UTILITY PLANS".
3. For drainage information see "DRAINAGE PLANS".
4. The contractor shall verify all controlling field dimensions before ordering or fabricating any material.
5. For weephole and wall drain details see sheet "RETAINING WALL NO. 4 - WALL DETAILS 2".
6. Contractor shall install temporary shoring prior to excavating soil behind exist wall.
7. 15'-0" batter break line limits STA 1021+22.90 TO 1024+92.
8. For architectural treatment, see "ARCHITECTURAL PLANS".

DESIGN OVERSIGHT 7/14/16 SIGN OFF DATE	DESIGN	BY G. Yu	CHECKED M. Vargas	LOAD & RESISTANCE FACTOR DESIGN	LIVE LOADING: HL-93
	DETAILS	BY H. Li	CHECKED M. Vargas	LAYOUT BY H. Li	CHECKED M. Vargas
	QUANTITIES	BY M. Vargas	CHECKED G. Yu	SPECIFICATIONS BY D. Desai	PLANS AND SPECS COMPARED M. Vargas

PREPARED FOR THE STATE OF CALIFORNIA DEPARTMENT OF TRANSPORTATION

Erik Okada
PROJECT ENGINEER

BRIDGE NO. 28E0215
POST MILES 5.92

RETAINING WALL NO. 4
PLAN AND ELEVATION

DESIGN GENERAL PLAN SHEET (ENGLISH) (REV. 06-01-09)

ORIGINAL SCALE IN INCHES FOR REDUCED PLANS 0 1 2 3

UNIT: 0000
PROJECT NUMBER & PHASE: 04140005521

DISREGARD PRINTS BEARING EARLIER REVISION DATES

REVISION DATES (PRELIMINARY STAGE ONLY)

SHEET 6 OF 33

FILE => 006-28-0100r-a-rw_ja04.dgn

USERNAME => null! DATE PLOTTED => 7/14/2016 TIME PLOTTED => 10:35:01 AM

DIST	COUNTY	ROUTE	POST MILES TOTAL PROJECT	SHEET No	TOTAL SHEETS
04	CC/Mrn	580	5.0/7.8, 0.0/3.3	513	579

REGISTERED CIVIL ENGINEER — DATE 7/14/16

PLANS APPROVAL DATE 7/26/16

REGISTERED PROFESSIONAL ENGINEER — E. OKADA — No. S4415 — Exp. 6-30-18 — STRUCTURAL — STATE OF CALIFORNIA

The State of California or its officers or agents shall not be responsible for the accuracy or completeness of scanned copies of this plan sheet.

HNTB CORPORATION
1111 BROADWAY
9TH FLOOR
OAKLAND, CA 94607

BAY AREA TOLL AUTHORITY
375 BEALE STREET, SUITE 800
SAN FRANCISCO, CA 94105

NOTES:

1. Prior to wall construction, submit temporary shoring design and construction sequence to the engineer for approval.
2. The contractor shall verify all controlling field dimensions before ordering or fabricating any material.
3. The dimension on the plans are approximate. Prior to installing soil nails, contractor shall verify the existing wall and pile locations.
4. Expansion joint in CIP concrete facing only.
5. Install soil nails normal to retaining wall LOL.
6. Max 5'-0" excavation lift.
7. The contractor shall provide and maintain stable soil above and below the soil nail anchors.
8. See soil nail layout for soil nail schedule.
9. For expansion joint location, see plan and elevation.
10. Return Wall Elevation and Details see "RETAINING WALL NO. 4 - WALL DETAILS" Sheet.

LEGEND:

- INDICATES EXIST TIE-BACK ANCHOR
- INDICATES PRODUCTION NAILS
- INDICATES TEST NAILS
- INDICATES EXIST STRUCTURE
- INDICATES NAIL ROW DESIGNATION LINE
- Le: EMBEDMENT LENGTH (Ft)
- Deg°: NAIL DECLINATION (Deg)
- S: HORIZONTAL SPACING (Ft)
- BAR#: MINIMUM SOIL NAIL BAR SIZE
- Pn: NOMINAL PULLOUT RESISTANCE (KLF)

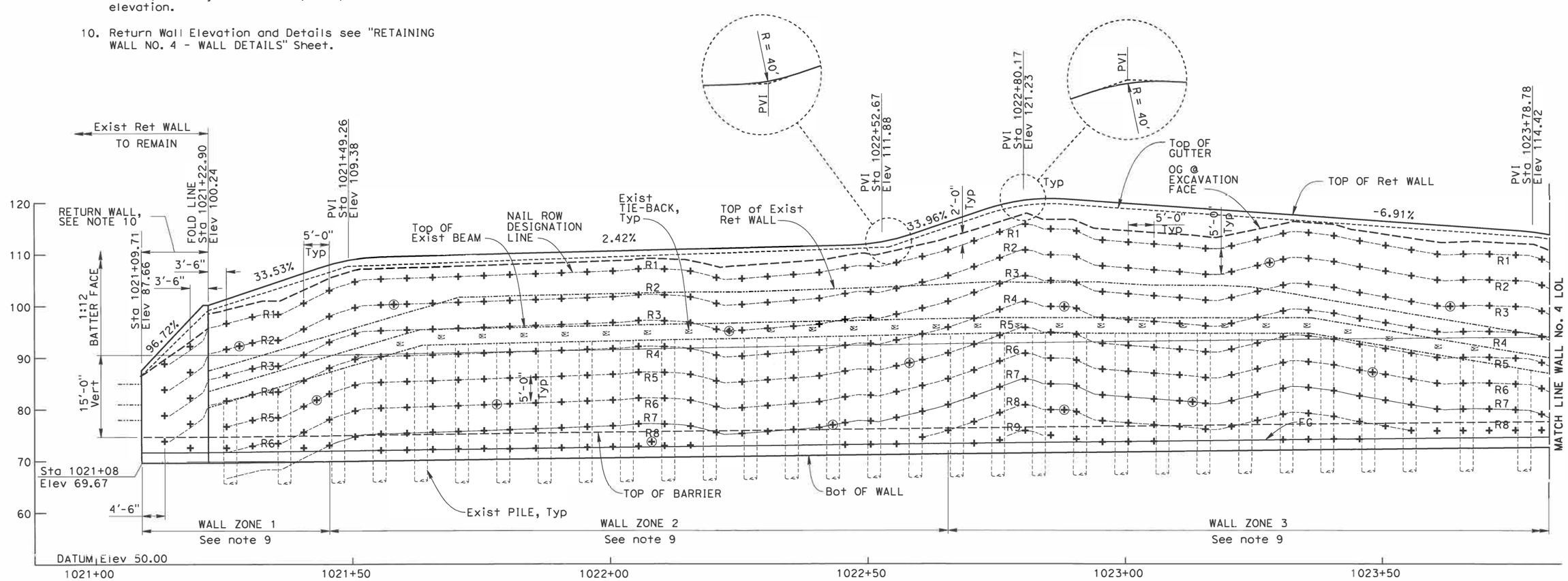

MIRRORED WALL ELEVATION

1"=10'-0"

DESIGN OVERSIGHT — SIGN OFF DATE 7/14/16

	BY	CHECKED
DESIGN	G. Yu	M. Vargas
DETAILS	H. Li	M. Vargas
QUANTITIES	M. Vargas	G. Yu

PREPARED FOR THE STATE OF CALIFORNIA DEPARTMENT OF TRANSPORTATION

Erik Okada — PROJECT ENGINEER

BRIDGE NO. 28E0215 — POST MILES 5.92

RETAINING WALL NO. 4
SOIL NAIL LAYOUT 1

DESIGN DETAIL SHEET (ENGLISH) (REV. 03/14/12)

ORIGINAL SCALE IN INCHES FOR REDUCED PLANS 0 1 2 3

UNIT: 0000
PROJECT NUMBER & PHASE: 04140005521
CONTRACT NO.: 04-2J6804

DISREGARD PRINTS BEARING EARLIER REVISION DATES

REVISION DATES

SHEET 7 OF 33

FILE => 007-28-0100r-g-rwd+01.dgn

USERNAME => DATE PLOTTED => 7/14/2016 TIME PLOTTED => 10:26:09 AM

DIST	COUNTY	ROUTE	POST MILES TOTAL PROJECT	SHEET No	TOTAL SHEETS
04	CC/Mrn	580	5.0/7.8, 0.0/3.3	514	579

REGISTERED CIVIL ENGINEER 7/14/16 DATE

7/26/16
PLANS APPROVAL DATE

REGISTERED PROFESSIONAL ENGINEER E. OKADA No. S4415 Exp. 6-30-18 STRUCTURAL STATE OF CALIFORNIA

The State of California or its officers or agents shall not be responsible for the accuracy or completeness of scanned copies of this plan sheet.

HNTB CORPORATION
1111 BROADWAY
9TH FLOOR
OAKLAND, CA 94607

BAY AREA TOLL AUTHORITY
375 BEALE STREET, SUITE 800
SAN FRANCISCO, CA 94105

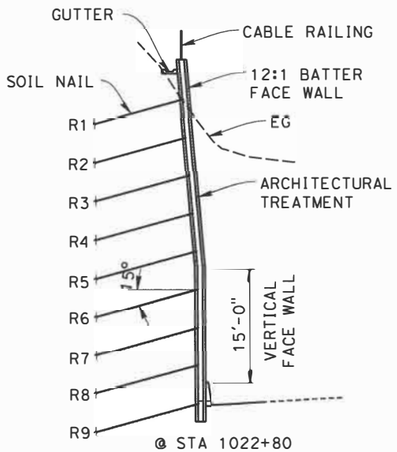

@ STA 1022+80

TYPICAL SECTION

1"=10'-0"

SOIL NAIL SCHEDULE

WALL ZONE	ROW	Le	Deg	S	BAR #	Pn	DESCRIPTION
1	R1-R2	30	15	5	9	2.26	SILTY SAND
	R3-R4	25	15	5	9	2.94	MODERATELY WEATHERED SANDSTONE
	R5-R6	20	15	5	9	2.94	MODERATELY WEATHERED SANDSTONE
2	R1-R3	40	15	5	9	2.26	SILTY SAND
	R4-R6	30	15	5	9	2.94	MODERATELY WEATHERED SANDSTONE
	R7-R8	25	15	5	9	2.94	MODERATELY WEATHERED SANDSTONE
3	R1-R4	45	15	5	9	2.26	SILTY SAND
	R5-R7	35	15	5	9	2.94	MODERATELY WEATHERED SANDSTONE
	R8-R9	25	15	5	9	2.94	MODERATELY WEATHERED SANDSTONE
4	R1-R2	30	15	5	9	2.26	SILTY SAND
	R3-R4	25	15	5	9	2.94	MODERATELY WEATHERED SANDSTONE
	R5-R6	20	15	5	9	2.94	MODERATELY WEATHERED SANDSTONE
5	R1-R2	40	15	5	9	3.02	SILTY SAND
	R3-R5	30	15	5	9	3.02	SILTY SAND

LEGEND:

- INDICATES EXIST TIE-BACK ANCHOR
- + INDICATES PRODUCTION NAIL
- ⊕ INDICATES TEST NAIL
- INDICATES EXIST STRUCTURE
- INDICATES NAIL ROW DESIGNATION LINE
- Le: EMBEDMENT LENGTH (Ft)
- Deg°: NAIL DECLINATION (Deg)
- S: HORIZONTAL SPACING (Ft)
- BAR#: MINIMUM SOIL NAIL BAR SIZE
- Pn: NOMINAL PULLOUT RESISTANCE (KLF)

NOTES:

1. For expansion joint locations, see "PLAN AND ELEVATION".
2. Expansion joint in CIP concrete facing only.
3. For Down Drain Details see "DRAIN DETAILS NO. 2" sheet.

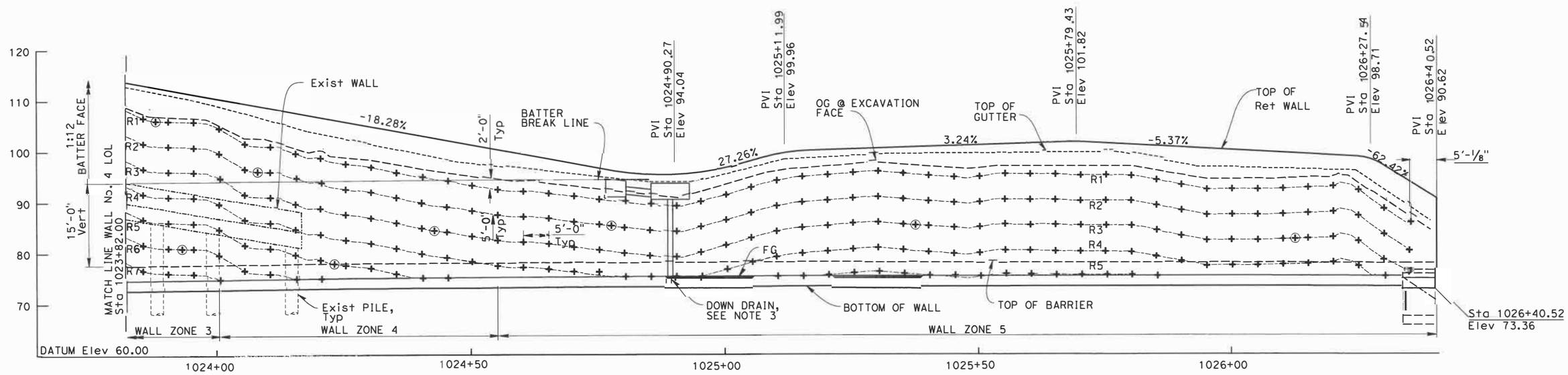

MIRRORED WALL ELEVATION

1"=10'-0"

DESIGN OVERSIGHT
7/14/16
SIGN OFF DATE

	BY	CHECKED
DESIGN	G. Yu	M. Vargas
DETAILS	H. Paige	M. Vargas
QUANTITIES	M. Vargas	G. Yu

PREPARED FOR THE STATE OF CALIFORNIA DEPARTMENT OF TRANSPORTATION

Erik Okada
PROJECT ENGINEER

BRIDGE NO. 28E0215
POST MILES 5.92

RETAINING WALL NO. 4
SOIL NAIL LAYOUT 2

DESIGN DETAIL SHEET (ENGLISH) (REV. 03/14/12)

ORIGINAL SCALE IN INCHES FOR REDUCED PLANS 0 1 2 3

UNIT: 0000
PROJECT NUMBER & PHASE: 04140005521 CONTRACT NO.: 04-2J6804

DISREGARD PRINTS BEARING EARLIER REVISION DATES

REVISION DATES

SHEET 8 OF 33

FILE => 008-28-0100r-g-rwd+02.dgn

DATE PLOTTED => 8/24/16 TIME PLOTTED => 07:16:15

DIST	COUNTY	ROUTE	POST MILES TOTAL PROJECT	SHEET No	TOTAL SHEETS
04	CC/Mrn	580	5.0/7.8, 0.0/3.3	515	579

REGISTERED CIVIL ENGINEER 7/14/16 DATE

7/26/16
PLANS APPROVAL DATE

REGISTERED PROFESSIONAL ENGINEER E. OKADA No. S4415 Exp. 6-30-18 STRUCTURAL STATE OF CALIFORNIA

The State of California or its officers or agents shall not be responsible for the accuracy or completeness of scanned copies of this plan sheet.

HNTB CORPORATION
1111 BROADWAY
9TH FLOOR
OAKLAND, CA 94607

BAY AREA TOLL AUTHORITY
375 BEALE STREET, SUITE 800
SAN FRANCISCO, CA 94105

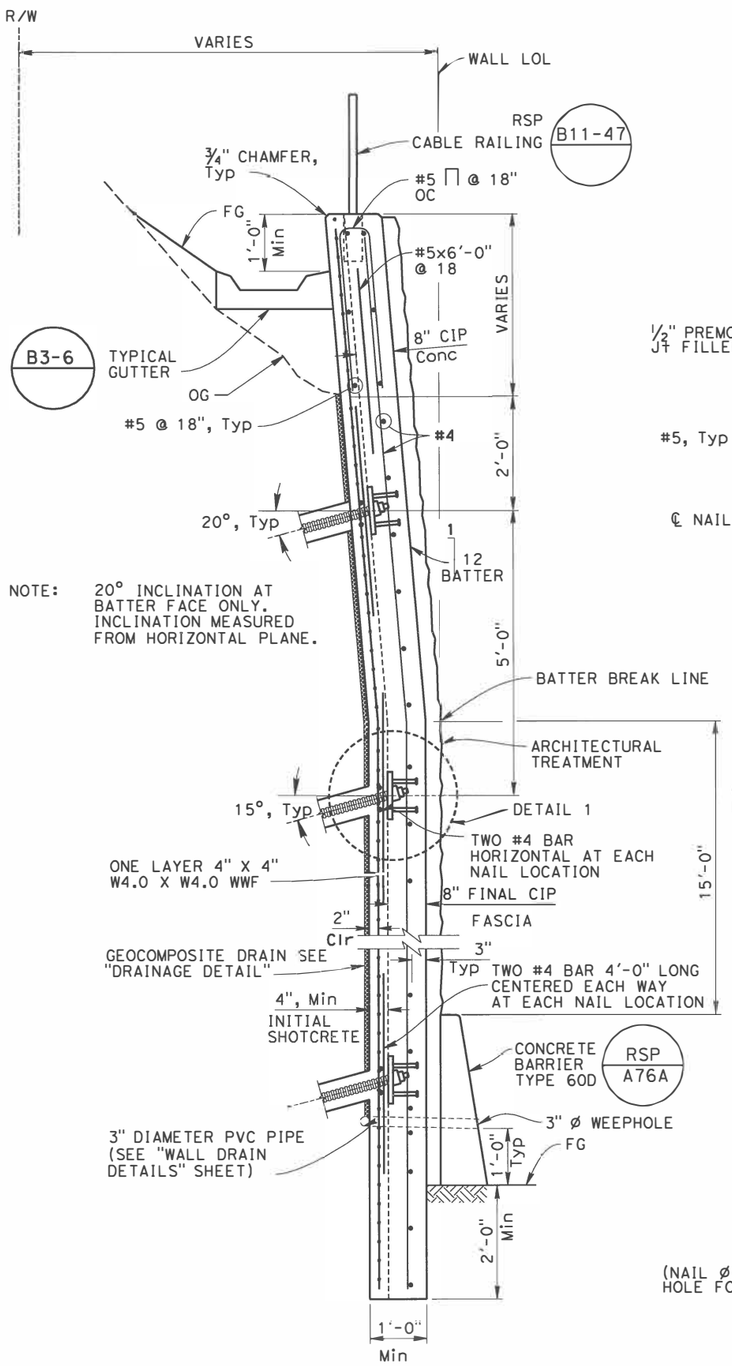

NOTE: 20° INCLINATION AT BATTER FACE ONLY. INCLINATION MEASURED FROM HORIZONTAL PLANE.

TYPICAL SECTION
3/4" = 1'-0"

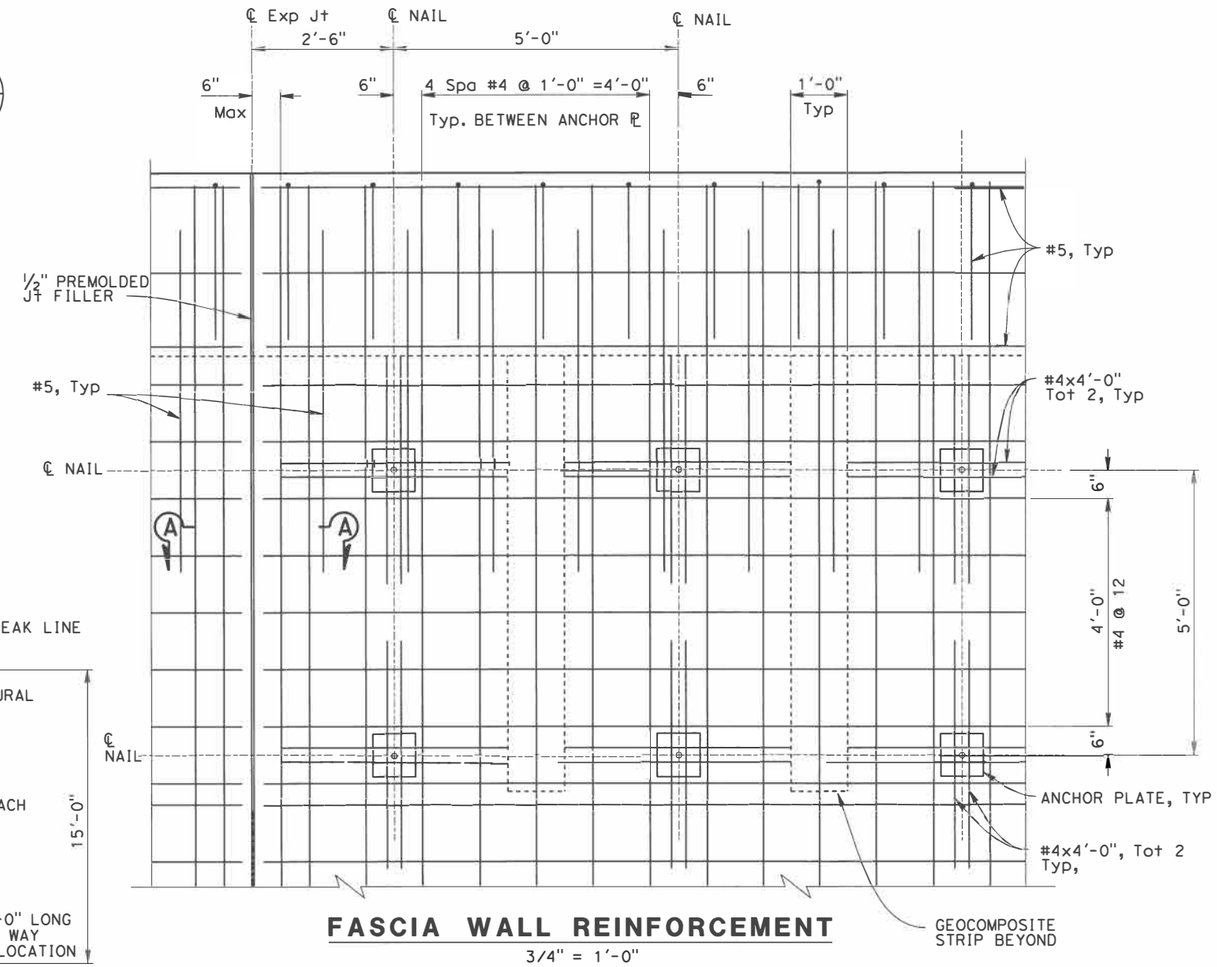

FASCIA WALL REINFORCEMENT
3/4" = 1'-0"

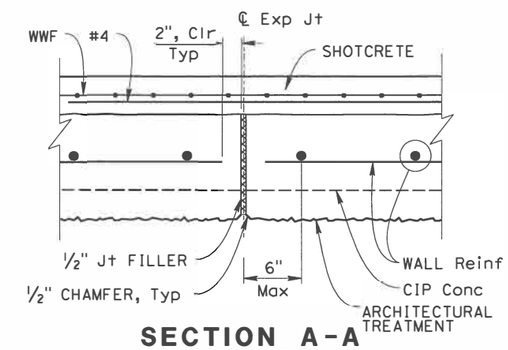

SECTION A-A
1 1/2" = 1'-0"

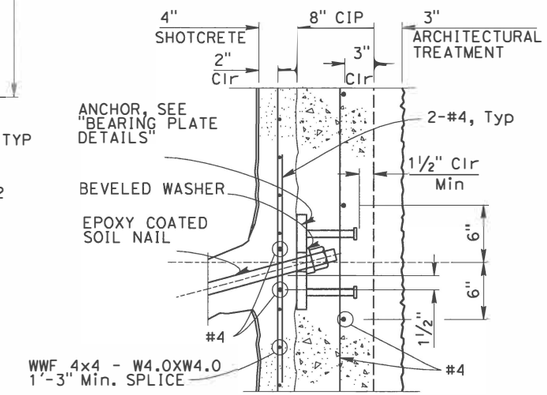

DETAIL 1
1 1/2" = 1'-0"

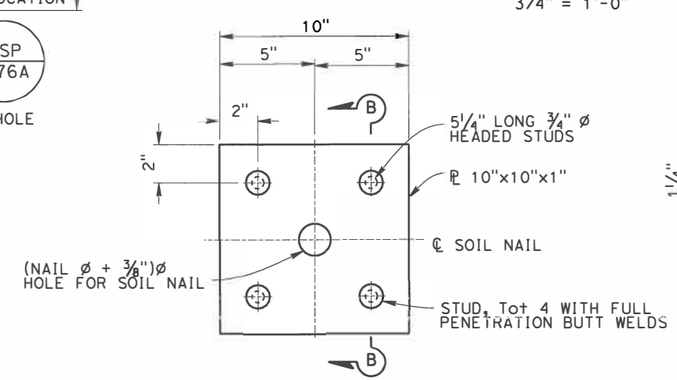

BEARING PLATE DETAIL
3" = 1'-0"

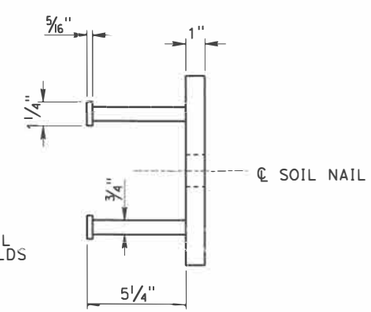

SECTION B-B
3" = 1'-0"

NOTES:

1. For nail spacing, nail length and nail size see "RETAINING WALL NO. 4 - SOIL NAIL LAYOUT" sheets.
2. For Gutter Drain Inlet and Down Drain locations see Drainage Plans.
3. The Vertical and Horizontal Construction Joints in the Initial Shotcrete Layer shall be located a minimum of 1'-6" from adjacent Soil Nails.
4. Lap splice length for rebar shall be equal to 48 bar diameters.
5. Lap splice length for geocomposite drain shall be 12".
6. Expansion Joint location, See "PLAN AND ELEVATION" sheet.
7. Expansion Joint in CIP concrete facing only.

DESIGN OVERSIGHT
7/14/16
SIGN OFF DATE

	BY	CHECKED
DESIGN	G. Yu	M. Vargas
DETAILS	H. Li	G. Yu
QUANTITIES	G. Yu	M. Vargas

PREPARED FOR THE STATE OF CALIFORNIA DEPARTMENT OF TRANSPORTATION

Erik Okada
PROJECT ENGINEER

BRIDGE NO. 28E0216
POST MILES 5.92

RETAINING WALL NO. 4
SOIL NAIL DETAILS 1

DESIGN DETAIL SHEET (ENGLISH) (REV. 03/14/12)

ORIGINAL SCALE IN INCHES FOR REDUCED PLANS 0 1 2 3

UNIT: 0000
PROJECT NUMBER & PHASE: 0414000552I
CONTRACT NO.: 04-2J6804

DISREGARD PRINTS BEARING EARLIER REVISION DATES

REVISION DATES

SHEET 9 OF 33

FILE => 009-28-01001-g-rwdt03.dgn

USERNAME => hu111
DATE PLOTTED => 7/14/2016
TIME PLOTTED => 10:26:11 AM

DIST	COUNTY	ROUTE	POST MILES TOTAL PROJECT	SHEET No	TOTAL SHEETS
04	CC/Mrn	580	5.0/7.8, 0.0/3.3	516	579

REGISTERED CIVIL ENGINEER — DATE 7/14/16

7/26/16
PLANS APPROVAL DATE

REGISTERED PROFESSIONAL ENGINEER — E. OKADA — No. S4415 — Exp. 6-30-18 — STRUCTURAL — STATE OF CALIFORNIA

The State of California or its officers or agents shall not be responsible for the accuracy or completeness of scanned copies of this plan sheet.

HNTB CORPORATION
1111 BROADWAY
9TH FLOOR
OAKLAND, CA 94607

BAY AREA TOLL AUTHORITY
375 BEALE STREET, SUITE 800
SAN FRANCISCO, CA 94105

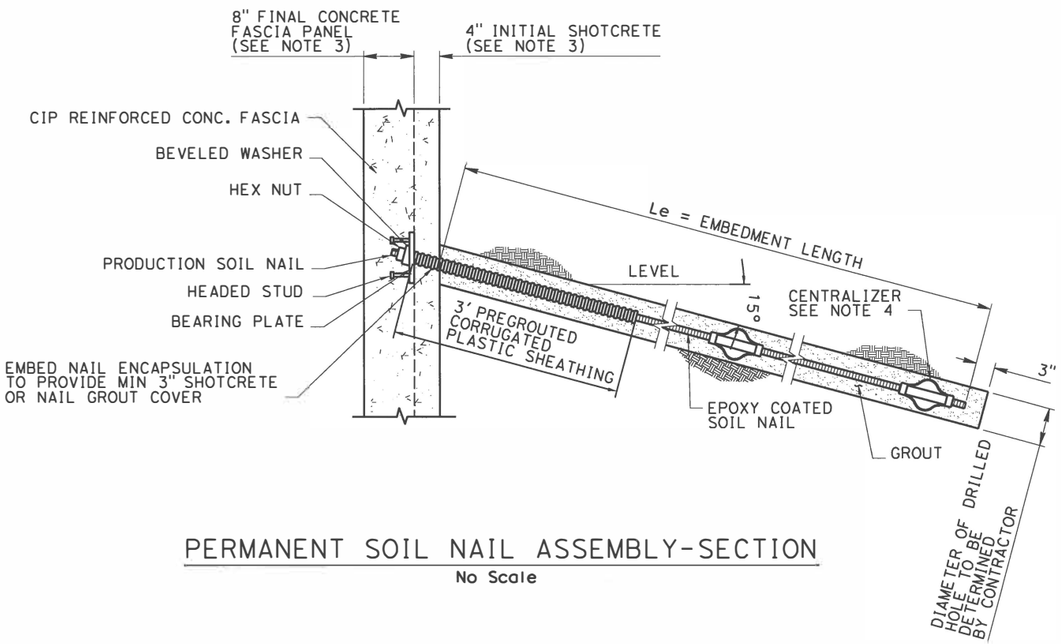

PERMANENT SOIL NAIL ASSEMBLY-SECTION

No Scale

Notes:

1. The Le'T', embedment length of Test Nails, Shall be equal to two thirds of the embedment length, Le of adjacent Soil Nail assemblies, but not less than 13 feet.
2. Contractor is responsible for selecting test nail bar diameter, and the total length to accommodate the jacking equipment for the Test Soil Nail.
3. Reinforcement required for proof testing, but not shown. For reinforcement, see "SOIL NAIL DETAILS 1" sheet.
4. The centralizer shall be made from a plastic material and attached to the nail in a way that will not impede the free flow of grout. Centralizer spacing per Special Provisions.
5. Minimum 2" diameter blockout is required for pullout testing. Verification, Proof Test, and Design Pullout Resistance see note 7.
6. For location of Proof Test Soil Nail Assemblies, see "RETAINING WALL NO. 4 - SOIL NAIL LAYOUT" sheets. Additional Proof Test Soil Nails will be installed as directed by the Engineer, and tested per Special Provisions.
7. Soil Nail Testing:
   Design Pullout Resistance, 0-5 feet, Qd = 1500 lb/ft; below 5 feet Qd = 2250 lb/ft.
   Refer to LOTB and Final Foundation Report for subsurface information.

NOTES:

1. Bottom of wall to be placed against undisturbed material
2. Center of geocomposite strips shall be centered vertically between soil nail assemblies
3. Indicates soil nail locations

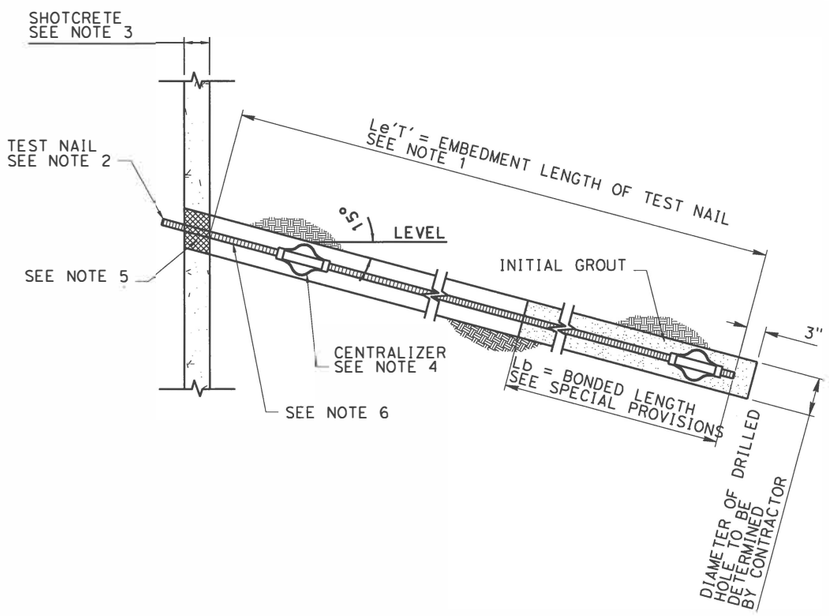

VERIFICATION AND PROOF TEST SOIL NAIL ASSEMBLY

No Scale

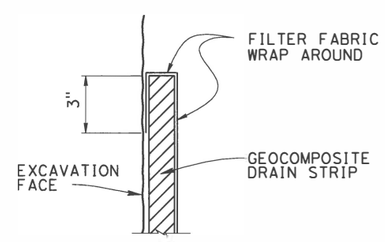

SECTION A-A

NO SCALE

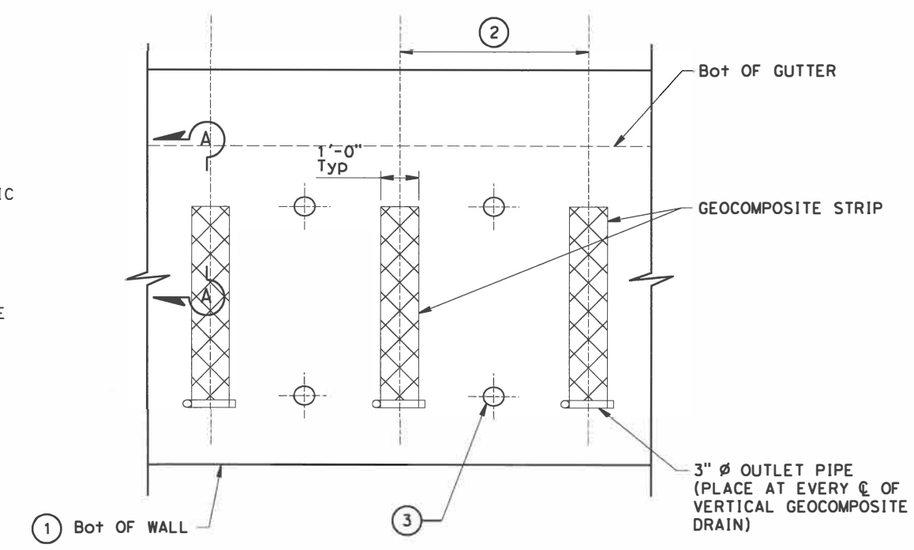

WALL PART ELEVATION

No Scale

DESIGN OVERSIGHT 7/14/16 SIGN OFF DATE	DESIGN	BY G. Yu	CHECKED M. Vargas	PREPARED FOR THE STATE OF CALIFORNIA DEPARTMENT OF TRANSPORTATION	Erik Okada PROJECT ENGINEER
	DETAILS	BY H. Li	CHECKED G. Yu		
	QUANTITIES	BY G. Yu	CHECKED M. Vargas		

BRIDGE NO. 28E0216
POST MILES 5.92

RETAINING WALL NO. 4
SOIL NAIL DETAILS 2

DESIGN DETAIL SHEET (ENGLISH) (REV. 03/14/12)

ORIGINAL SCALE IN INCHES FOR REDUCED PLANS 0 1 2 3

UNIT: 0000
PROJECT NUMBER & PHASE: 04140005521
CONTRACT NO.: 04-2J6804

DISREGARD PRINTS BEARING EARLIER REVISION DATES

REVISION DATES

SHEET 10 OF 33

FILE => 010-28-01001-a-rwd+04-D.dgn

USERNAME => PWI1 DATE PLOTTED => 7/14/2016 TIME PLOTTED => 10:26:12 AM

DIST	COUNTY	ROUTE	POST MILES TOTAL PROJECT	SHEET No.	TOTAL SHEETS
04	CC/Mrn	580	5.0/7.8, 0.0/3.3	517	579

REGISTERED CIVIL ENGINEER 7/14/16 DATE

7/26/16
PLANS APPROVAL DATE

REGISTERED PROFESSIONAL ENGINEER E. OKADA No. S4415 Exp. 6-30-18 STRUCTURAL STATE OF CALIFORNIA

The State of California or its officers or agents shall not be responsible for the accuracy or completeness of electronic copies of this plan sheet.

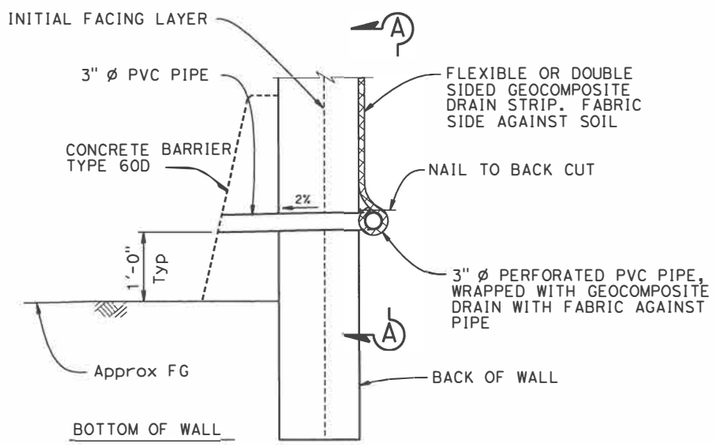

WALL DRAIN DETAIL AT WEEPHOLE OPTION A

No scale

4

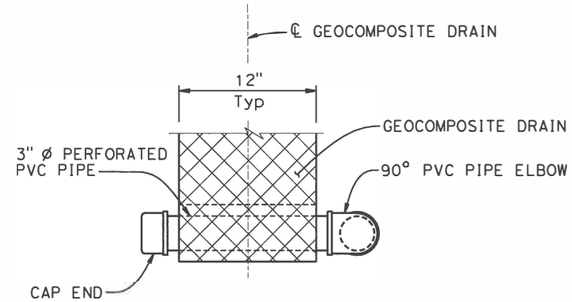

VIEW A-A

No scale

NOTES:

1. Geocomposite drain strip per Section 88 Geosynthetics of the Standard Specifications

3

1

2

STANDARD DRAWING	
FILE NO. xs12-021	APPROVAL DATE 7/14/16

1 Delete wall drain detail at weephole Option B Detail.
2 Delete Section B-B.
3 Delete Note No. 2.
4 Modify detail

STATE OF CALIFORNIA DEPARTMENT OF TRANSPORTATION

DIVISION OF ENGINEERING SERVICES

BRIDGE NO. 28E0216
POST MILE 6.22

RETAINING WALL NO. 4
WALL DRAIN DETAILS

DS OSD 2147A (ENGLISH STANDARD DRAWING "XS" BORDER REV. (02-02-11))

ORIGINAL SCALE IN INCHES FOR REDUCED PLANS 0 1 2 3

UNIT: 0000
PROJECT NUMBER & PHASE: 04140005521
CONTRACT NO.: 04-2J6804

DISREGARD PRINTS BEARING EARLIER REVISION DATES

REVISION DATES

SHEET 11 OF 33

FILE => 011-28-01001-a-rwdt05.dgn

USERNAME => hu11 DATE PLOTTED => 7/14/2016 TIME PLOTTED => 10:26:12 AM

DIST	COUNTY	ROUTE	POST MILES TOTAL PROJECT	SHEET No	TOTAL SHEETS
04	CC/Mrn	580	5.0/7.8, 0.0/3.3	518	579

REGISTERED CIVIL ENGINEER — DATE 7/14/16

PLANS APPROVAL DATE 7/26/16

REGISTERED PROFESSIONAL ENGINEER — E. OKADA — No. S4415 — Exp. 6-30-18 — STRUCTURAL — STATE OF CALIFORNIA

The State of California or its officers or agents shall not be responsible for the accuracy or completeness of scanned copies of this plan sheet.

HNTB CORPORATION
1111 BROADWAY
9TH FLOOR
OAKLAND, CA 94607

BAY AREA TOLL AUTHORITY
375 BEALE STREET, SUITE 800
SAN FRANCISCO, CA 94105

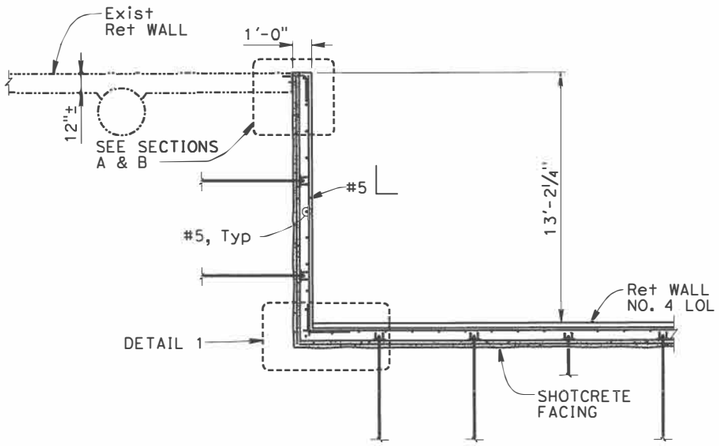

PLAN
NO SCALE

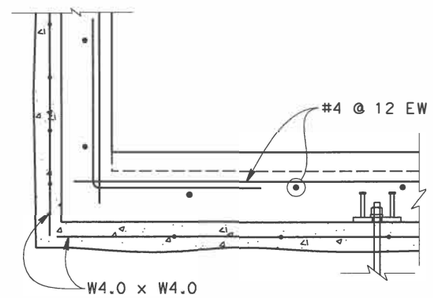

DETAIL 1
NO SCALE

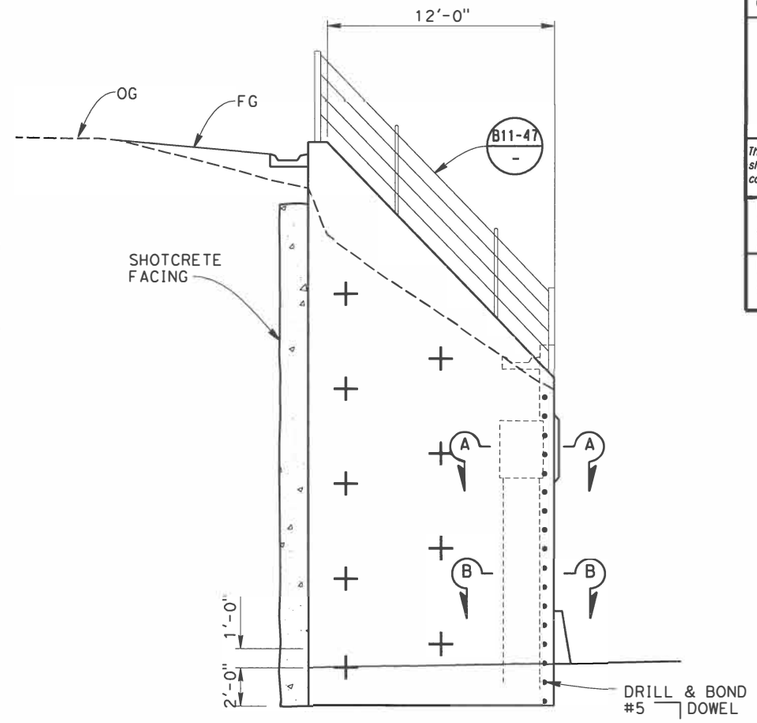

RETURN WALL ELEVATION
NO SCALE

LEGEND:

- STRUCTURE BACKFILL
- STRUCTURE EXCAVATION
- STRUCTURE EXCAVATION 2' ADL (TYPE Z-2)

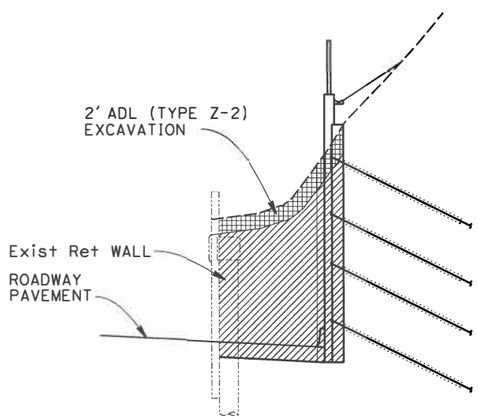

EXCAVATION

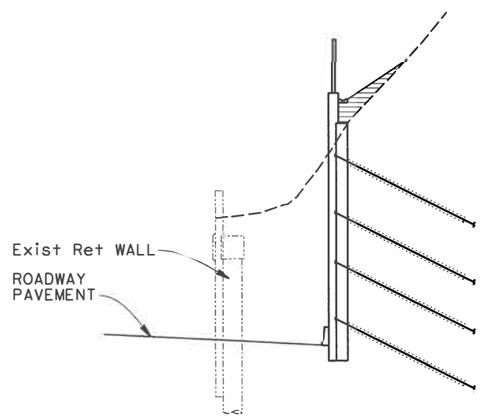

BACKFILL

LIMITS FOR PAYMENT
NO SCALE

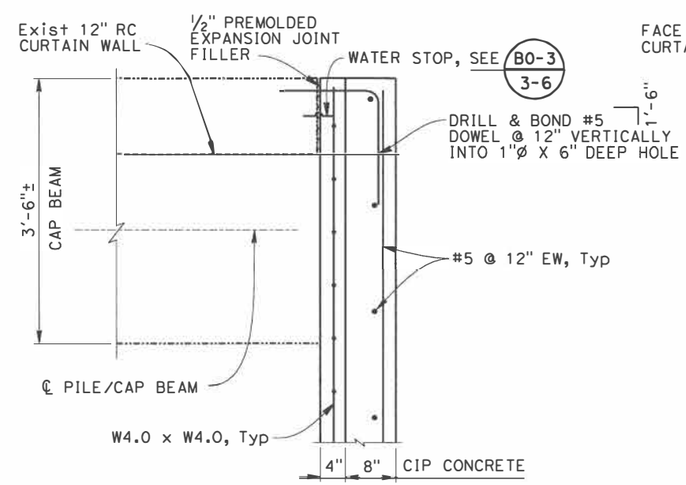

SECTION A-A
NO SCALE

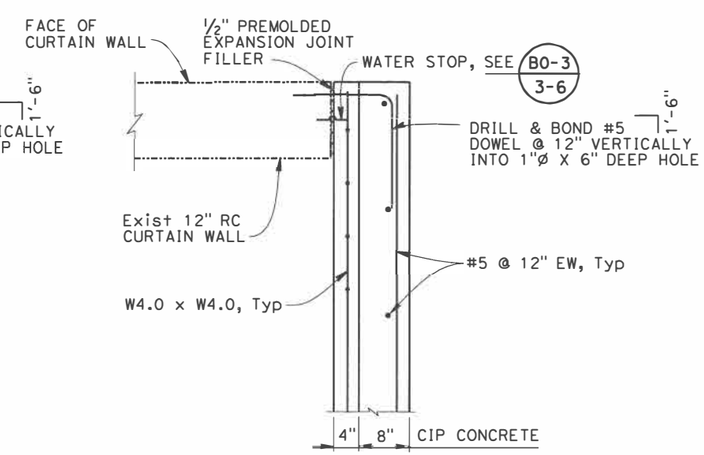

SECTION B-B
NO SCALE

DESIGN OVERSIGHT — 7/14/16 SIGN OFF DATE

	BY	CHECKED
DESIGN	M. Vargas	G. Yu
DETAILS	H. Li	M. Vargas
QUANTITIES	M. Vargas	G. Yu

PREPARED FOR THE STATE OF CALIFORNIA DEPARTMENT OF TRANSPORTATION

Erik Okada — PROJECT ENGINEER

BRIDGE NO. 28E0215 — POST MILES 5.92

RETAINING WALL NO. 4
WALL DETAILS

DESIGN DETAIL SHEET (ENGLISH) (REV. 03/14/12)

ORIGINAL SCALE IN INCHES FOR REDUCED PLANS 0 1 2 3

UNIT: 0000
PROJECT NUMBER & PHASE: 04140005521 CONTRACT NO.: 04-2J6804

DISREGARD PRINTS BEARING EARLIER REVISION DATES — REVISION DATES

SHEET 12 OF 33

FILE => 012-28-0100r-a-rwd106-D.dgn

USERNAME => hulit DATE PLOTTED => 7/14/2016 TIME PLOTTED => 10:26:13 AM

DIST	COUNTY	ROUTE	POST MILES TOTAL PROJECT	SHEET No	TOTAL SHEETS
04	CC/Mrn	580	5.0/7.8, 0.0/3.3	519	579

REGISTERED CIVIL ENGINEER 7/14/16 DATE

7/26/16
PLANS APPROVAL DATE

REGISTERED PROFESSIONAL ENGINEER E. OKADA No. S4415 Exp. 6-30-18 STRUCTURAL STATE OF CALIFORNIA

The State of California or its officers or agents shall not be responsible for the accuracy or completeness of scanned copies of this plan sheet.

HNTB CORPORATION
1111 BROADWAY
9TH FLOOR
OAKLAND, CA 94607

BAY AREA TOLL AUTHORITY
375 BEALE STREET, SUITE 800
SAN FRANCISCO, CA 94105

LEGEND:

- • INDICATES TEMPORARY SOIL NAIL
- ⊠ INDICATES EXIST TIE BACK ANCHOR

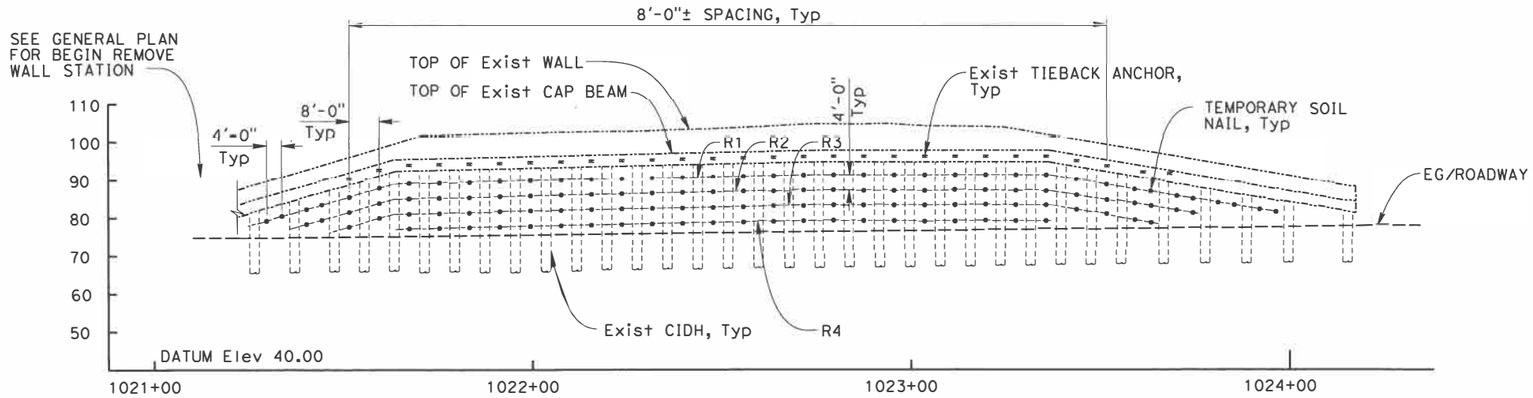

SUGGESTED TEMPORARY SOIL NAIL LAYOUT (MIRRORED)

1"=20'-0"

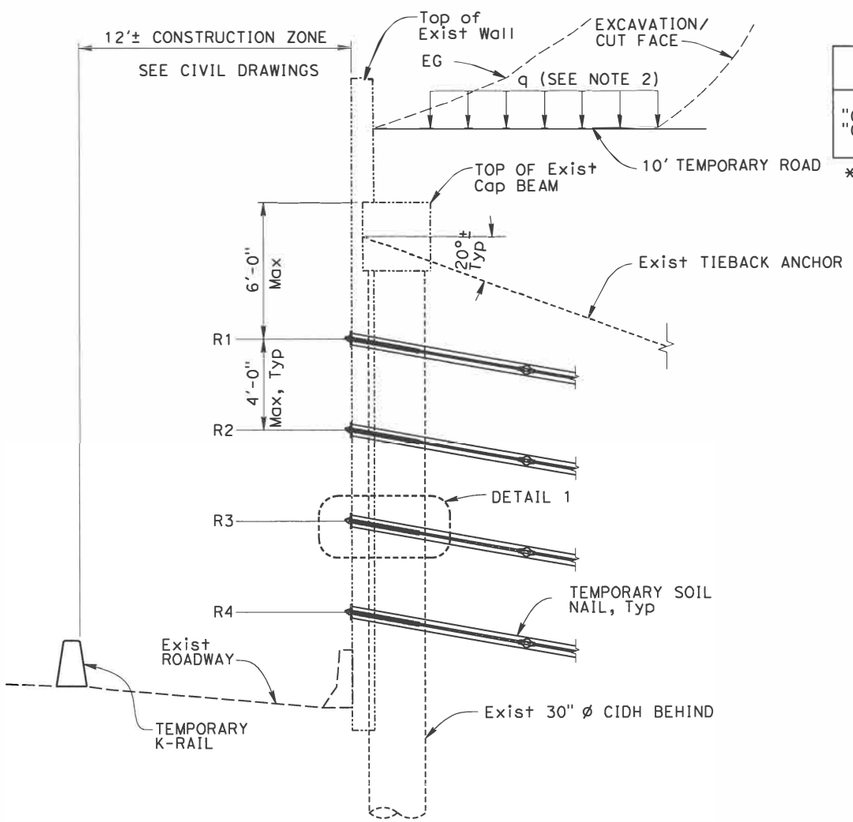

SUGGESTED TYPICAL SECTION

3/8"=1'-0"

SOIL PROPERTIES

STATION LIMIT	DEPTH* (ft)	UNIT WEIGHT (pcf)	FRICTION ANGLE	COHESION (psf)	ULTIMATE BOND STRENGTH, q_u (psi)	SOIL TYPE
"CC-E" LINE Sta 1021+22 TO "CC-E" LINE Sta 1024+50	0-20	130	36	150	10	SILTY SAND
	20-40	130	40	300	13	MODERATELY WEATHERED SANDSTONE

* Note: The depth is the distance from the top of the wall.

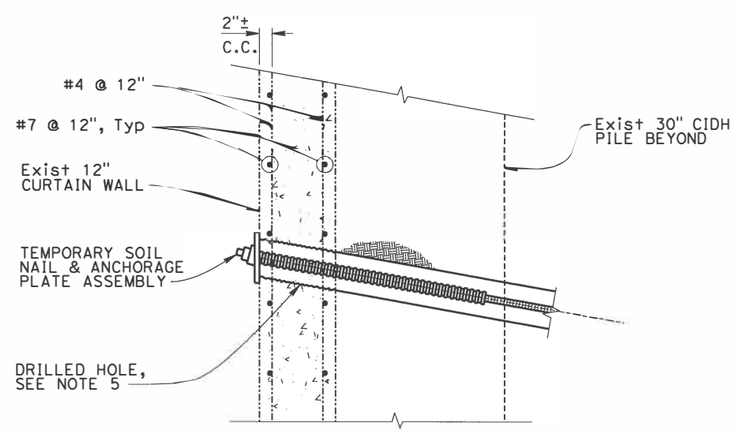

DETAIL 1

1/2"=1'-0"

TEMPORARY SUPPORT CONSTRUCTION NOTES:

1. The existing tie back anchor wall cannot self-support when the tie-backs are removed.
2. A temporary support system shall be installed prior to initiating excavation and construction of the soil nail retaining wall.
3. The details shown on this drawing including temporary nail spacing and nail locations are shown for illustration only. The contractor is allowed to develop their own temporary wall support system.
4. During wall construction, the contractor shall be responsible for monitoring and maintaining the existing wall stability during construction.
5. If attachment or drilling to existing wall is required, the contractor shall verify location of curtain Wall reinforcement and location of existing CIDH solider piles and tie-back anchors.
6. For limits of construction envelope in front of the wall, see civil drawings.

EXISTING WALL INFORMATION:

1. The maximum cantilevered wall height without support when tiebacks are cut is 8'-0".
2. The maximum allowed construction surcharge q = 500 psf. Higher loads may be used as long as the contractor determines that a higher load will not compromise the wall's stability and safety of the operation.
3. Maximum force per tieback:
   Tmax: ±90 kips (ROW A)
   Tmax: ±76 kips (ROW B
4. The punching shear and flexural capacity of the wall are:
   V = 70 kips, M = 15 kip-ft.

DESIGN OVERSIGHT
7/14/16
SIGN OFF DATE

	BY	CHECKED
DESIGN	M. Vargas	G. Yu
DETAILS	H. Li	M. Vargas
QUANTITIES	M. Vargas	G. Yu

PREPARED FOR THE STATE OF CALIFORNIA DEPARTMENT OF TRANSPORTATION

Erik Okada
PROJECT ENGINEER

BRIDGE NO. 28E0215
POST MILES 5.92

RETAINING WALL NO. 4
TEMPORARY SHORING

DESIGN DETAIL SHEET (ENGLISH) (REV. 03/14/12)

ORIGINAL SCALE IN INCHES FOR REDUCED PLANS 0 1 2 3

UNIT: 0000
PROJECT NUMBER & PHASE: 04140005521 CONTRACT NO.: 04-2J6804

DISREGARD PRINTS BEARING EARLIER REVISION DATES

REVISION DATES

SHEET 13 OF 33

FILE => 013-28-0100r-a-rwd+07-D.dgn

USERNAME => null DATE PLOTTED => 7/14/2016 TIME PLOTTED => 10:26:14 AM

DIST	COUNTY	ROUTE	POST MILES TOTAL PROJECT	SHEET No	TOTAL SHEETS
04	CC/Mrn	580	5.0/7.8, 0.0/3.3	520	579

REGISTERED CIVIL ENGINEER — DATE 7/14/16

7/26/16
PLANS APPROVAL DATE

REGISTERED PROFESSIONAL ENGINEER — E. OKADA — No. S4415 — Exp. 6-30-18 — STRUCTURAL — STATE OF CALIFORNIA

The State of California or its officers or agents shall not be responsible for the accuracy or completeness of scanned copies of this plan sheet.

HNTB CORPORATION
1111 BROADWAY
9TH FLOOR
OAKLAND, CA 94607

BAY AREA TOLL AUTHORITY
375 BEALE STREET, SUITE 800
SAN FRANCISCO, CA 94105

RETAINING WALL NO. 5 QUANTITIES

STRUCTURE EXCAVATION (SOIL NAIL WALL)	168	CY
STRUCTURE BACKFILL (SOIL NAIL WALL)	75	CY
STRUCTURAL SHOTCRETE	59	CY
STRUCTURAL CONCRETE (RETAINING WALL)	189	CY
BAR REINFORCING STEEL (RETAINING WALL)	25,415	LB
MINOR CONCRETE (GUTTER)	502	LF
GEOCOMPOSITE DRAIN	641	SQFT
CABLE RAILING	509	LF
SOIL NAIL	2,929	LF
ARCHITECTURAL TREATMENT	6,686	SQFT

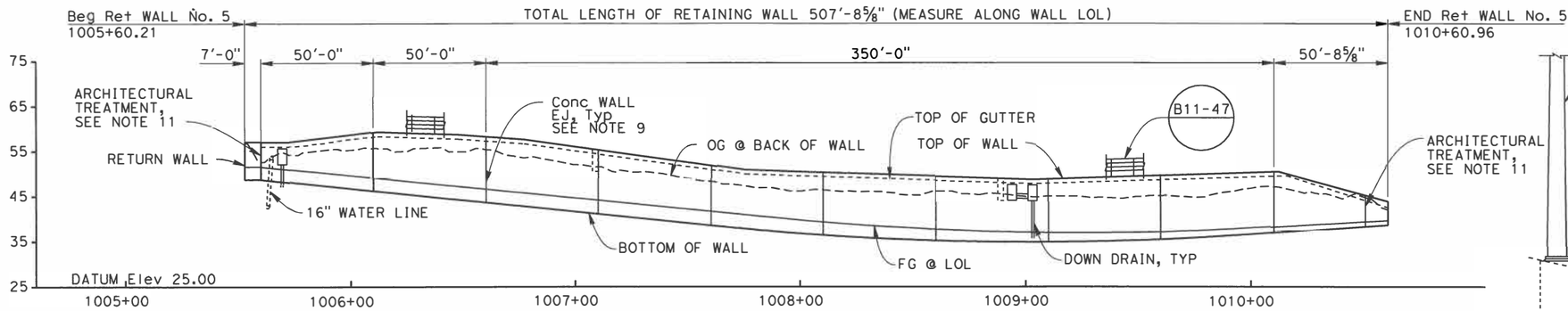

DEVELOPED ELEVATION

Horiz. 1"=30'-0"
Vert. 1"=15'-0"

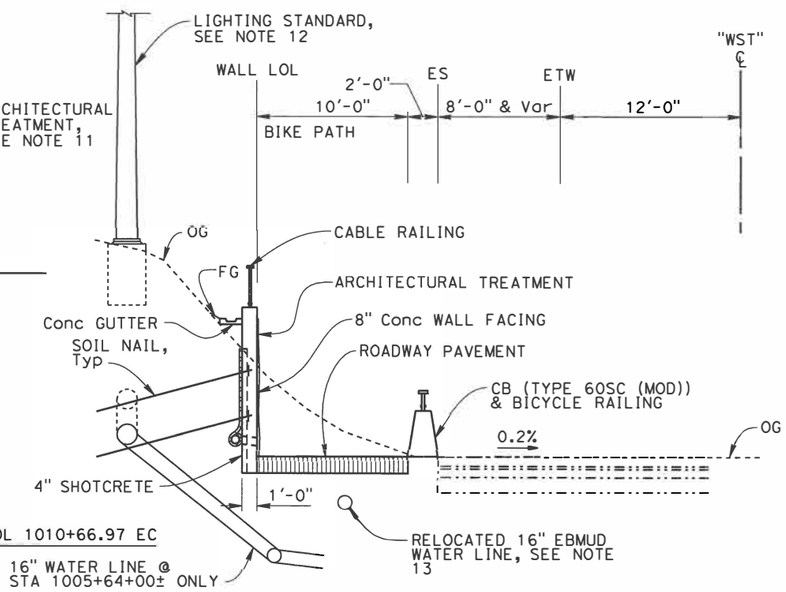

TYPICAL SECTION

NO SCALE

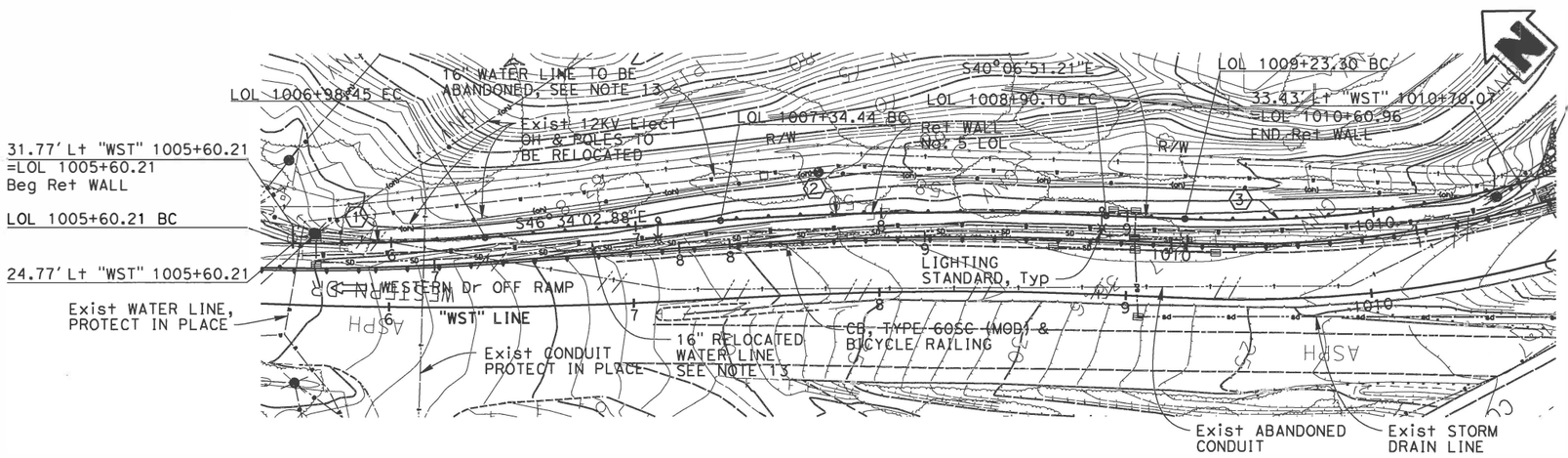

PLAN

1"=30'-0"

CURVE DATA				
No.	R	Δ	T	L
1	990.00'	4°34'18"	39.52'	78.99'
2	1382.0'	6°27'07"	77.90'	155.63'
3	458.00'	16°35'27"	66.78'	132.62'

LEGEND:

- INDICATES DIRECTION OF TRAFFIC
- CONCRETE RETAINING WALL
- CONCRETE BARRIER

NOTES:

1. For roadway information see "ROADWAY PLANS".
2. For utility information see "UTILITY PLANS".
3. For drainage information see "DRAINAGE PLANS".
4. For concrete wall facing joint details see 2010 STANDARD PLAN BO-3.
5. Controlling field conditions to be verified prior to begin of construction work.
6. For wall details not shown see 2010 STANDARD PLANS B3-5 and B3-6, and sheet "SOIL NAIL DETAILS 1 and 2".
7. For wall drain details, See "WALL DRAIN DETAILS".
8. For Cable Railing see 2010 STANDARD PLAN B11-47.
9. Expansion joint in CIP concrete fascia only.
10. Install and test 2 verification nails per wall zone before starting excavation.
11. For architectural treatment, see "ARCHITECTURAL PLANS".
12. For lighting standard location and details, see "LIGHTING AND SIGN ILLUMINATION".
13. Contractor shall coordinate construction with EBMUD's relocation of 16" water line. See EBMUD's construction plan for alignment and details.

DESIGN OVERSIGHT — 7/14/16 — SIGN OFF DATE

	BY	CHECKED		
DESIGN	G. Yu	M. Vargas	LOAD & RESISTANCE FACTOR DESIGN	LIVE LOADING: HL-93
DETAILS	H. Paige	G. Yu	LAYOUT: H. Paige	CHECKED G. Yu
QUANTITIES	G. Yu	M. Vargas	SPECIFICATIONS: D. Desai	PLANS AND SPECS COMPARED D. Desai

PREPARED FOR THE STATE OF CALIFORNIA DEPARTMENT OF TRANSPORTATION

Erik Okada — PROJECT ENGINEER

BRIDGE NO. 28E0216
POST MILES 6.00

RETAINING WALL NO. 5
PLAN AND ELEVATION

DESIGN GENERAL PLAN SHEET (ENGLISH) (REV. 06-01-09)

ORIGINAL SCALE IN INCHES FOR REDUCED PLANS 0 1 2 3

UNIT: 0000
PROJECT NUMBER & PHASE: 04140005521

DISREGARD PRINTS BEARING EARLIER REVISION DATES

REVISION DATES (PRELIMINARY STAGE ONLY)

SHEET 14 OF 33

USERNAME => hulit DATE PLOTTED => 7/14/2016 TIME PLOTTED => 11:59:08 AM

FILE => 014-28-01001-g-rw_1005.dgn

DIST	COUNTY	ROUTE	POST MILES TOTAL PROJECT	SHEET No	TOTAL SHEETS
04	CC/Mrn	580	5.0/7.8, 0.0/3.3	521	579

REGISTERED CIVIL ENGINEER 7/14/16 DATE

7/26/16
PLANS APPROVAL DATE

REGISTERED PROFESSIONAL ENGINEER E. OKADA No. S4415 Exp. 6-30-18 STRUCTURAL STATE OF CALIFORNIA

The State of California or its officers or agents shall not be responsible for the accuracy or completeness of scanned copies of this plan sheet.

HNTB CORPORATION
1111 BROADWAY
9TH FLOOR
OAKLAND, CA 94607

BAY AREA TOLL AUTHORITY
375 BEALE STREET, SUITE 800
SAN FRANCISCO, CA 94105

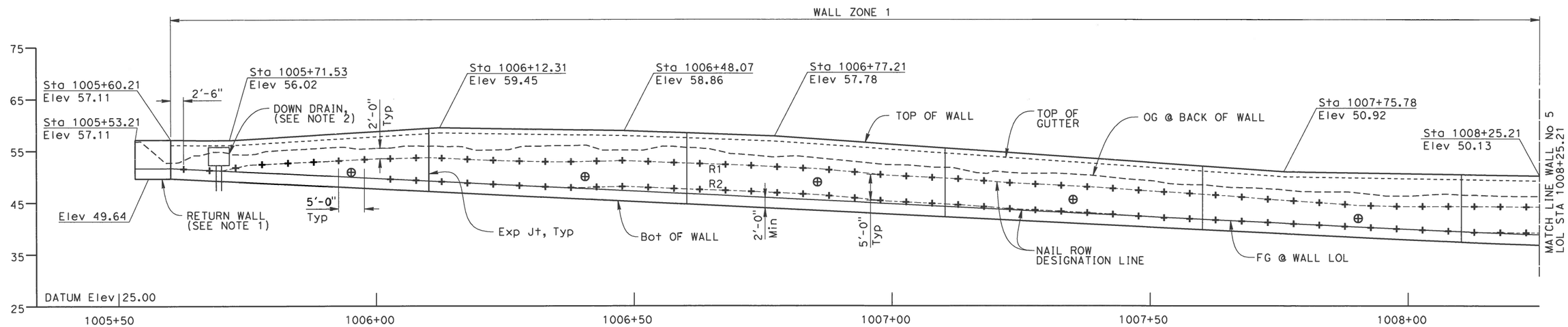

DEVELOPED ELEVATION

1"=10'-0"

NOTE:

1. Return wall shall be shotcrete and wire mesh applied to excavated face cut.
2. For down drain details, see "DRAIN DETAILS NO. 2' sheet.

WALL ZONE	ROW	Le	Deg°	S	BAR #	Pn	DESCRIPTION
1	R1	15	15	5	8	2.26	HIGHLY WEATHERED SANDSTONE
	R2	15	15	5	8	3.39	MODERATELY WEATHERED SANDSTONE

Le: EMBEDMENT LENGTH (FT)
Deg°: NAIL DECLINATION (Deg.)
S: HORIZONTAL SPACING OF NAILS (FT)
BAR#: MINIMUM SOIL NAIL BAR SIZE
Pn: NOMINAL PULLOUT RESISTANCE (KLF)

LEGEND:

-------- INDICATES NAIL ROW DESIGNATION LINE
+ PRODUCTION SOIL NAILS
⊕ PROOF TEST NAILS

DESIGN OVERSIGHT
7/14/16
SIGN OFF DATE

	BY	CHECKED
DESIGN	G. Yu	M. Vargas
DETAILS	H. Li	G. Yu
QUANTITIES	G. Yu	M. Vargas

PREPARED FOR THE STATE OF CALIFORNIA DEPARTMENT OF TRANSPORTATION

Erik Okada
PROJECT ENGINEER

BRIDGE NO. 28E0216
POST MILES 6.00

RETAINING WALL NO. 5
SOIL NAIL LAYOUT 1

DESIGN DETAIL SHEET (ENGLISH) (REV. 03/14/12)

ORIGINAL SCALE IN INCHES FOR REDUCED PLANS 0 1 2 3

UNIT: 0000
PROJECT NUMBER & PHASE: 04140005521 CONTRACT NO.: 04-2J6804

DISREGARD PRINTS BEARING EARLIER REVISION DATES

REVISION DATES

SHEET 15 OF 33

FILE => 015-28-01001-q-rwdt11.dgn

USERNAME => $USER$ DATE PLOTTED => $DATE$ TIME PLOTTED => $TIME$

DIST	COUNTY	ROUTE	POST MILES TOTAL PROJECT	SHEET No	TOTAL SHEETS
04	CC/Mrn	580	5.0/7.8, 0.0/3.3	522	579

REGISTERED CIVIL ENGINEER 7/14/16 DATE

7/26/16
PLANS APPROVAL DATE

REGISTERED PROFESSIONAL ENGINEER E. OKADA No. S4415 Exp. 6-30-18 STRUCTURAL STATE OF CALIFORNIA

The State of California or its officers or agents shall not be responsible for the accuracy or completeness of scanned copies of this plan sheet.

HNTB CORPORATION
1111 BROADWAY
9TH FLOOR
OAKLAND, CA 94607

BAY AREA TOLL AUTHORITY
375 BEALE STREET, SUITE 800
SAN FRANCISCO, CA 94105

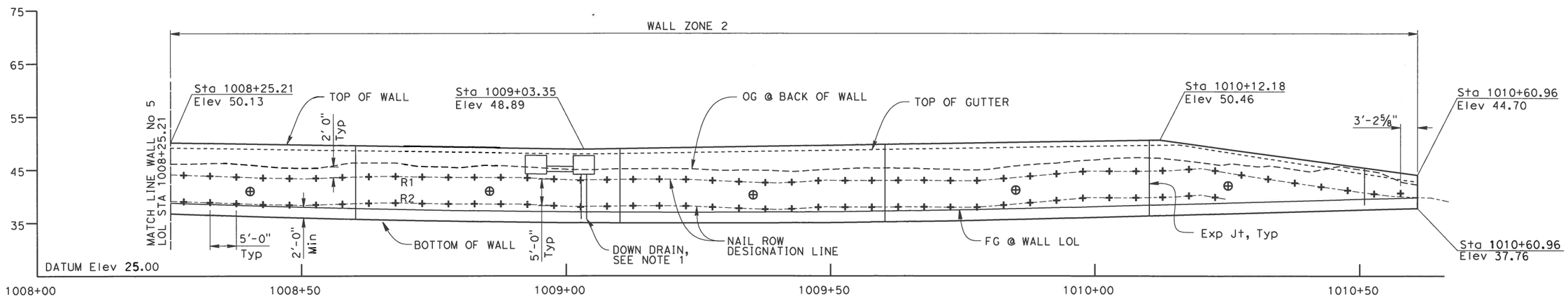

DEVELOPED ELEVATION

1"=10'-0"

NOTES:

1. For Down Drain Details see "DRAIN DETAILS NO. 2" sheet.

WALL ZONE	ROW	Le	Deg°	S	BAR #	Pn	DESCRIPTION
2	R1	15	15	5	8	2.26	HIGHLY WEATHERED SANDSTONE
	R2	15	15	5	8	3.39	MODERATELY WEATHERED SANDSTONE

Le: EMBEDMENT LENGTH (FT)
Deg°: NAIL DECLINATION (Deg.)
S: HORIZONTAL SPACING OF NAILS (FT)
BAR#: MINIMUM SOIL NAIL BAR SIZE
Pn: NOMINAL PULLOUT RESISTANCE (KLF)

LEGEND:

- - - - - - INDICATES NAIL ROW DESIGNATION LINE
+ PRODUCTION SOIL NAILS
⊕ PROOF TEST NAILS

DESIGN OVERSIGHT
7/14/16
SIGN OFF DATE

	BY	CHECKED
DESIGN	G. Yu	M. Vargas
DETAILS	H. Li	G. Yu
QUANTITIES	G. Yu	M. Vargas

PREPARED FOR THE STATE OF CALIFORNIA DEPARTMENT OF TRANSPORTATION

Erik Okada
PROJECT ENGINEER

BRIDGE NO. 28E0216
POST MILES 6.00

RETAINING WALL NO. 5
SOIL NAIL LAYOUT 2

DESIGN DETAIL SHEET (ENGLISH) (REV. 03/14/12)

ORIGINAL SCALE IN INCHES FOR REDUCED PLANS 0 1 2 3

UNIT: 0000
PROJECT NUMBER & PHASE: 04140005521
CONTRACT NO.: 04-2J6804

DISREGARD PRINTS BEARING EARLIER REVISION DATES

REVISION DATES

SHEET 16 OF 33

FILE => 016-28-01001-a-rwdt12.dgn

USERNAME => $USER$ DATE PLOTTED => $DATE$ TIME PLOTTED => $TIME$

DIST	COUNTY	ROUTE	POST MILES TOTAL PROJECT	SHEET No	TOTAL SHEETS
04	CC/Mrn	580	5.0/7.8, 0.0/3.3	523	579

REGISTERED CIVIL ENGINEER — DATE 7/14/16

PLANS APPROVAL DATE 7/26/16

REGISTERED PROFESSIONAL ENGINEER — E. OKADA — No. S4415 — Exp. 6-30-18 — STRUCTURAL — STATE OF CALIFORNIA

The State of California or its officers or agents shall not be responsible for the accuracy or completeness of scanned copies of this plan sheet.

HNTB CORPORATION
1111 BROADWAY
9TH FLOOR
OAKLAND, CA 94607

BAY AREA TOLL AUTHORITY
375 BEALE STREET, SUITE 800
SAN FRANCISCO, CA 94105

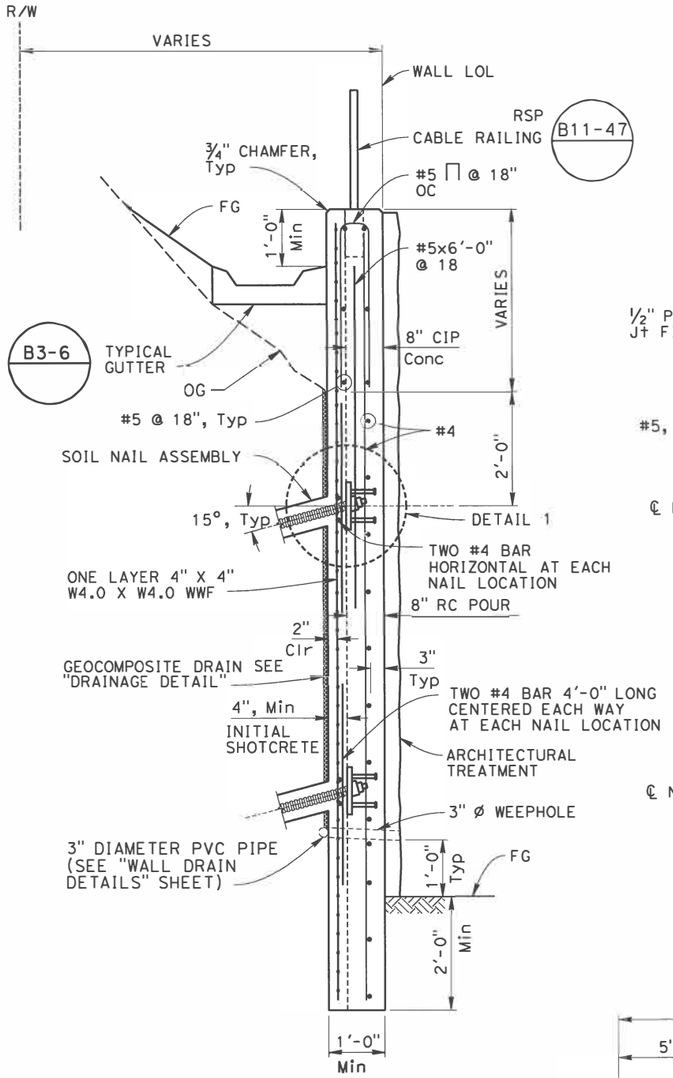

TYPICAL SECTION

3/4" = 1'-0"

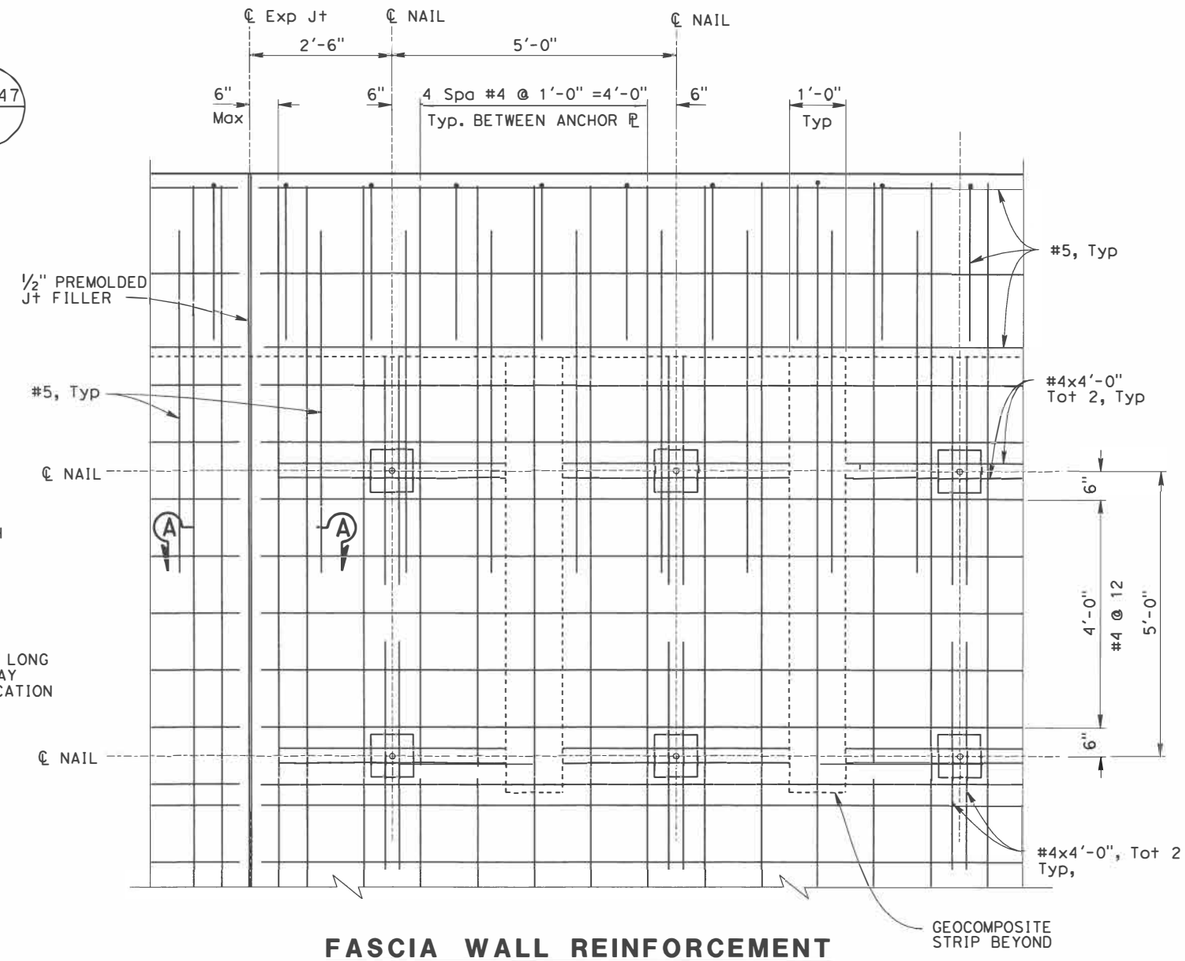

FASCIA WALL REINFORCEMENT

3/4" = 1'-0"

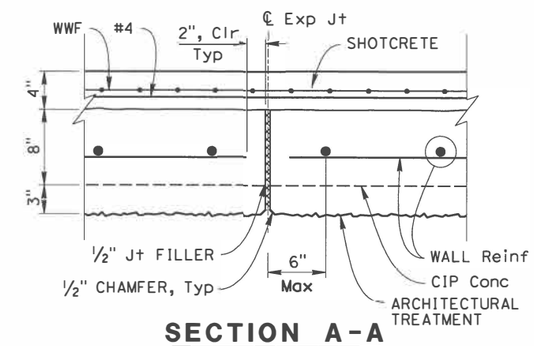

SECTION A-A

1 1/2" = 1'-0"

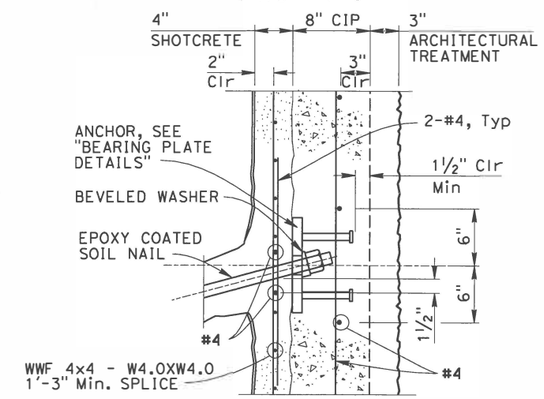

DETAIL 1

1 1/2" = 1'-0"

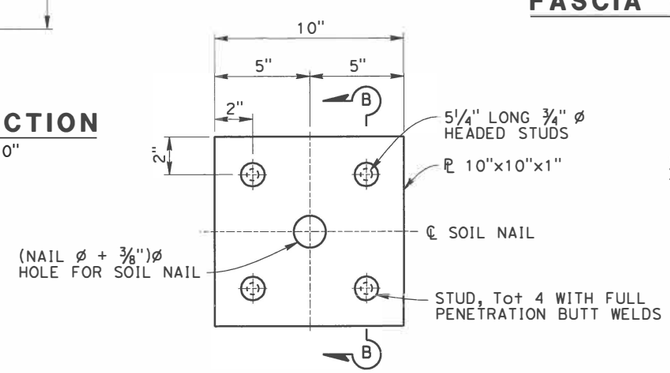

BEARING PLATE DETAIL

3" = 1'-0"

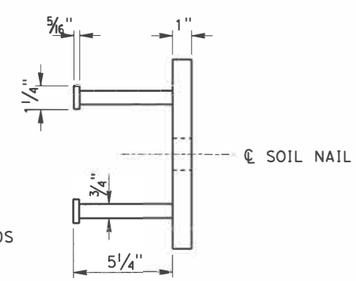

SECTION B-B

3" = 1'-0"

NOTES:

1. For nail spacing, nail length and nail size see "RETAINING WALL NO. 5 - SOIL NAIL LAYOUT" sheets.
2. For Gutter Drain Inlet and Down Drain locations see Drainage Plans.
3. The Vertical and Horizontal Construction Joints in the Initial Shotcrete Layer shall be located a minimum of 1'-6" from adjacent Soil Nails.
4. Lap splice length for rebar shall be equal to 48 bar diameters.
5. Lap splice length for geocomposite drain shall be 12".
6. Expansion Joint location, See "PLAN AND ELEVATION" sheet.
7. Expansion Joint in CIP concrete facing only.

DESIGN OVERSIGHT — SIGN OFF DATE 7/14/16

	BY	CHECKED
DESIGN	G. Yu	M. Vargas
DETAILS	H. Li	G. Yu
QUANTITIES	G. Yu	M. Vargas

PREPARED FOR THE STATE OF CALIFORNIA DEPARTMENT OF TRANSPORTATION

Erik Okada — PROJECT ENGINEER

BRIDGE NO. 28E0216 — POST MILES 5.92

RETAINING WALL NO. 5
SOIL NAIL DETAILS 1

DESIGN DETAIL SHEET (ENGLISH) (REV. 03/14/12)

ORIGINAL SCALE IN INCHES FOR REDUCED PLANS 0 1 2 3

UNIT: 0000
PROJECT NUMBER & PHASE: 04140005521 CONTRACT NO.: 04-2J6804

DISREGARD PRINTS BEARING EARLIER REVISION DATES — REVISION DATES

SHEET 17 OF 33

FILE => 017-28-01001-a-rwdt14.dgn

USERNAME => hu111 DATE PLOTTED => 7/14/2016 TIME PLOTTED => 10:26:19 AM

DIST	COUNTY	ROUTE	POST MILES TOTAL PROJECT	SHEET No	TOTAL SHEETS
04	CC/Mrn	580	5.0/7.8, 0.0/3.3	524	579

REGISTERED CIVIL ENGINEER 7/14/16 DATE

7/26/16
PLANS APPROVAL DATE

REGISTERED PROFESSIONAL ENGINEER E. OKADA No. S4415 Exp. 6-30-18 STRUCTURAL STATE OF CALIFORNIA

The State of California or its officers or agents shall not be responsible for the accuracy or completeness of scanned copies of this plan sheet.

HNTB CORPORATION
1111 BROADWAY
9TH FLOOR
OAKLAND, CA 94607

BAY AREA TOLL AUTHORITY
375 BEALE STREET, SUITE 800
SAN FRANCISCO, CA 94105

Notes:

1. The Le'T', embedment length of Test Nails, Shall be equal to two thirds of the embedment length, Le of adjacent Soil Nail assemblies, but not less than 13 feet.
2. Contractor is responsible for selecting test nail bar diameter, and the total length to accommodate the jacking equipment for the Test Soil Nail.
3. Reinforcement required for proof testing, but not shown. For reinforcement, see "SOIL NAIL DETAILS 1" sheet.
4. The centralizer shall be made from a plastic material and attached to the nail in a way that will not impede the free flow of grout. Centralizer spacing per Special Provisions.
5. Minimum 2" diameter blockout is required for pullout testing. Verification, Proof Test, and Design Pullout Resistance see note 7.
6. For location of Proof Test Soil Nail Assemblies, see "RETAINING WALL NO. 5 - SOIL NAIL LAYOUT" sheets. Additional Proof Test Soil Nails will be installed as directed by the Engineer, and tested per Special Provisions.
7. Soil Nail Testing:
   Design Pullout Resistance, 0-5 feet, Qd = 1500 lb/ft; below 5 feet Qd = 2250 lb/ft.
   Refer to LOTB and Final Foundation Report for subsurface information.

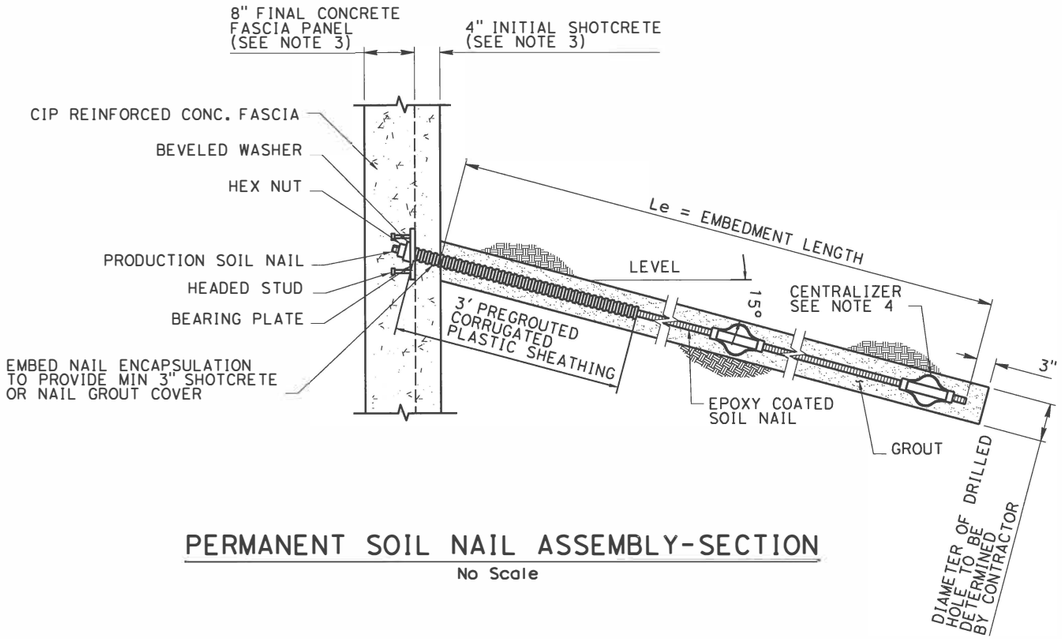

PERMANENT SOIL NAIL ASSEMBLY-SECTION

No Scale

NOTES:

1. Bottom of wall to be placed against undisturbed material
2. Center of geocomposite strips shall be centered vertically between soil nail assemblies
3. Indicates soil nail locations

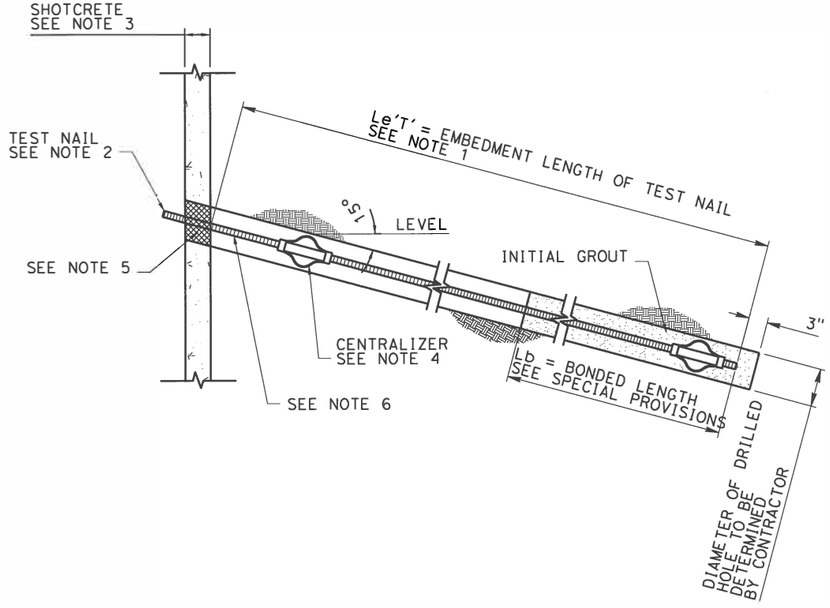

VERIFICATION AND PROOF TEST SOIL NAIL ASSEMBLY

No Scale

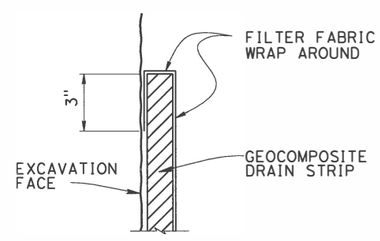

SECTION A-A

NO SCALE

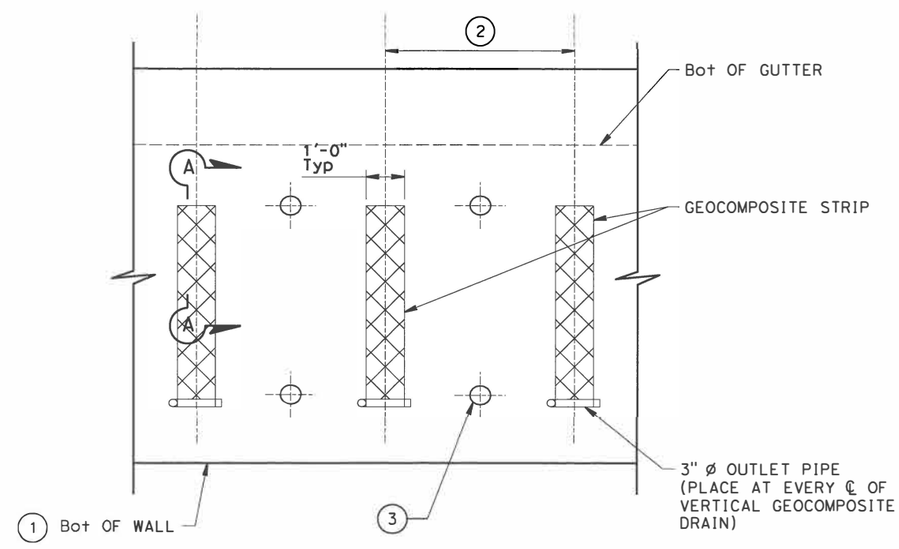

WALL PART ELEVATION

No Scale

DESIGN OVERSIGHT 7/14/16 SIGN OFF DATE	DESIGN	BY G. Yu	CHECKED M. Vargas	PREPARED FOR THE STATE OF CALIFORNIA DEPARTMENT OF TRANSPORTATION	Erik Okada PROJECT ENGINEER
	DETAILS	BY H. Li	CHECKED G. Yu		
	QUANTITIES	BY G. Yu	CHECKED M. Vargas		

BRIDGE NO. 28E0216
POST MILES 5.92

RETAINING WALL NO. 5
SOIL NAIL DETAILS 2

DESIGN DETAIL SHEET (ENGLISH) (REV. 03/14/12)

ORIGINAL SCALE IN INCHES FOR REDUCED PLANS 0 1 2 3

UNIT: 0000
PROJECT NUMBER & PHASE: 04140005521
CONTRACT NO.: 04-2J6804

DISREGARD PRINTS BEARING EARLIER REVISION DATES

REVISION DATES

SHEET 18 OF 33

FILE => 018-28-01001-a-rwdt15.dgn

USERNAME => nuiti DATE PLOTTED => 7/14/2016 TIME PLOTTED => 10:26:20 AM

DIST	COUNTY	ROUTE	POST MILES TOTAL PROJECT	SHEET No.	TOTAL SHEETS
04	CC/Mrn	580	5.0/7.8, 0.0/3.3	525	579

REGISTERED CIVIL ENGINEER 7/14/16 DATE

7/26/16
PLANS APPROVAL DATE

REGISTERED PROFESSIONAL ENGINEER E. OKADA No. S4415 Exp. 6-30-18 STRUCTURAL STATE OF CALIFORNIA

The State of California or its officers or agents shall not be responsible for the accuracy or completeness of electronic copies of this plan sheet.

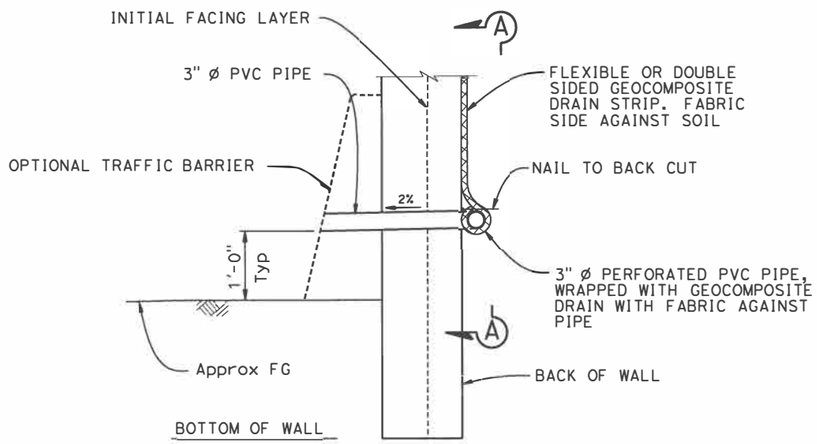

WALL DRAIN DETAIL AT WEEPHOLE
OPTION A
No scale

4

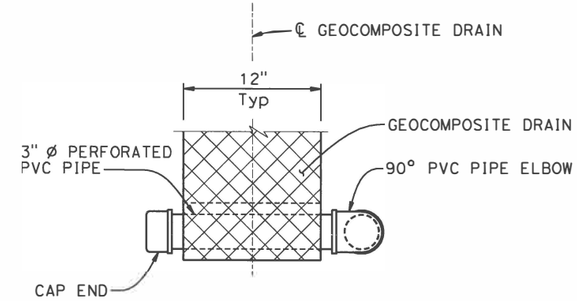

VIEW A-A
No scale

NOTES:

1. Geocomposite drain strip per Section 88 Geosynthetics of the Standard Specifications

3

1

2

STANDARD DRAWING	
FILE NO. xs12-021	APPROVAL DATE 7/14/16

1 Delete wall drain detail at weephole Option B Detail.
2 Delete Section B-B. 4 Modify detail
3 Delete Note No. 2.

STATE OF CALIFORNIA DEPARTMENT OF TRANSPORTATION

DIVISION OF ENGINEERING SERVICES

BRIDGE NO. 28E0216
POST MILE 6.22

RETAINING WALL NO. 5
WALL DRAIN DETAILS

DS OSD 2147A (ENGLISH STANDARD DRAWING "XS" BORDER REV. (02-02-11)

ORIGINAL SCALE IN INCHES FOR REDUCED PLANS 0 1 2 3

UNIT: 0000
PROJECT NUMBER & PHASE: 04140005521
CONTRACT NO.: 04-2J6804

DISREGARD PRINTS BEARING EARLIER REVISION DATES

REVISION DATES

SHEET 19 OF 33

FILE => 019-28-0100l-a-rwdt16.dgn

USERNAME => hulll DATE PLOTTED => 7/14/2016 TIME PLOTTED => 10:26:20 AM

DIST	COUNTY	ROUTE	POST MILES TOTAL PROJECT	SHEET No	TOTAL SHEETS
04	CC/Mrn	580	5.0/7.8, 0.0/3.3	526	579

REGISTERED CIVIL ENGINEER 7/14/16 DATE

7/26/16
PLANS APPROVAL DATE

REGISTERED PROFESSIONAL ENGINEER E. OKADA No. S4415 Exp. 6-30-18 STRUCTURAL STATE OF CALIFORNIA

The State of California or its officers or agents shall not be responsible for the accuracy or completeness of scanned copies of this plan sheet.

HNTB CORPORATION
1111 BROADWAY
9TH FLOOR
OAKLAND, CA 94607

BAY AREA TOLL AUTHORITY
375 BEALE STREET, SUITE 800
SAN FRANCISCO, CA 94105

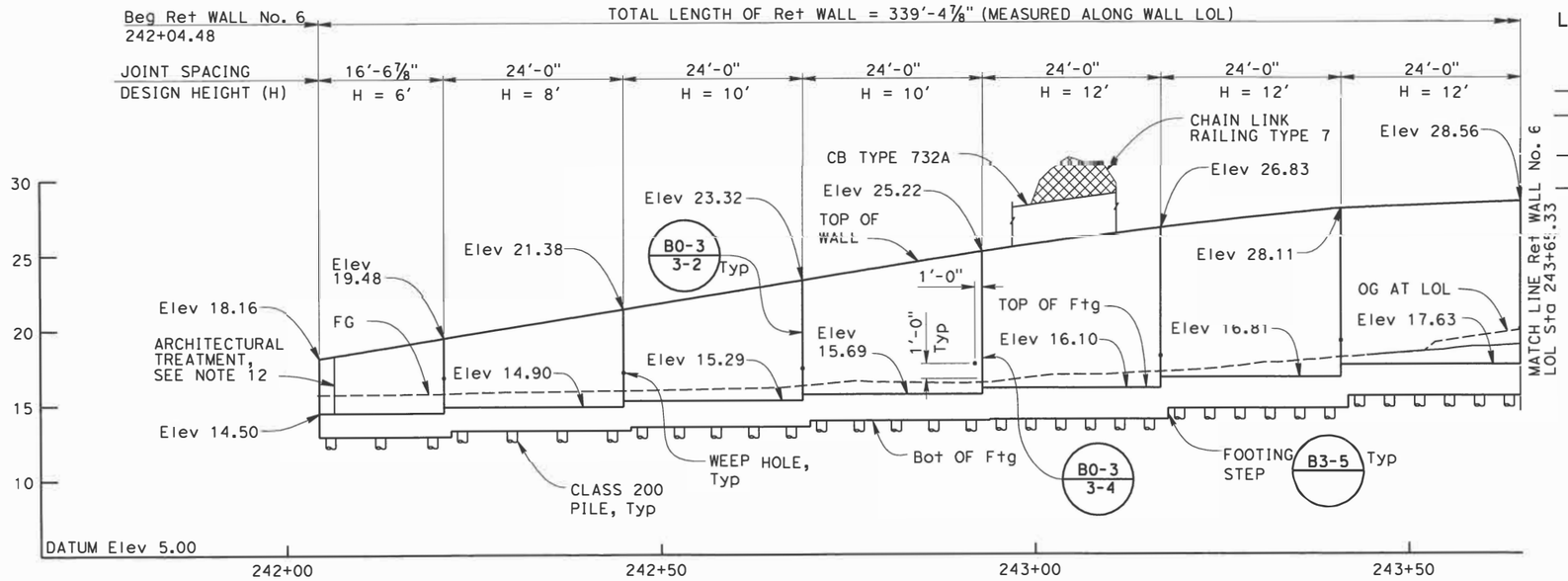

DEVELOPED ELEVATION

Horiz. 1"=10'-0"
Vert. 1"=5'-0"

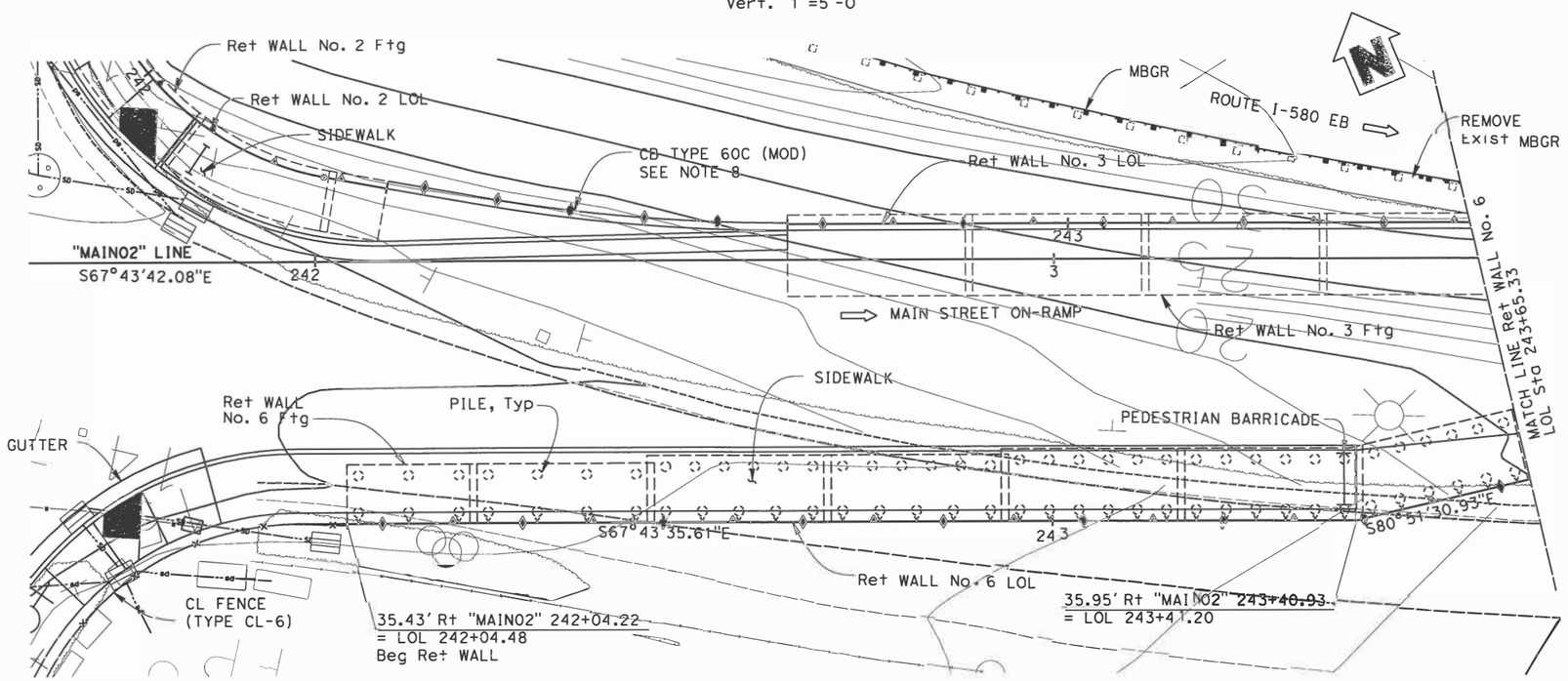

PLAN

1"=10'-0"

LEGEND:

- INDICATES DIRECTION OF TRAFFIC
- CONCRETE RETAINING WALL
- CONCRETE BARRIER
- CONCRETE RETAINING WALL WITH CONCRETE BARRIER
- CHAIN LINK FENCE
- INDICATES PILE
- INDICATES BATTERED PILE

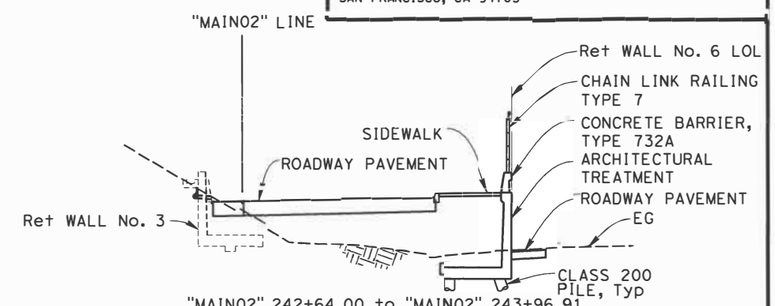

"MAIN02" 242+64.00 to "MAIN02" 243+96.91

TYPICAL SECTION

NO SCALE

NOTES:

1. For roadway information see "ROADWAY PLANS".
2. For utility information see "UTILITY PLANS".
3. For drainage information see "DRAINAGE PLANS".
4. For wall stem joint details see 2010 Standard Plan B0-3.
5. Controlling field conditions to be verified prior to start of construction.
6. For wall and pile details not shown see 2010 Standard Plans B3-5, and sheet "RETAINING WALL NO. 6 -DETAILS".
7. For weephole and wall drain details see sheet "RETAINING WALL - DRAIN DETAILS".
8. For barrier type 60C (MOD) details, see sheet "CONCRETE BARRIER TYPE 60C (MOD)".
9. For barrier type 732A details, see 2010 Standard Plan RSP B11-55.
10. For chain link railing type 7 details, see 2010 Standard Plan B11-52.
11. For staging information, see "STAGE CONSTRUCTION PLANS".
12. For architectural treatment, see "ARCHITECTURAL PLANS".

RETAINING WALL NO. 6 QUANTITIES

STRUCTURE EXCAVATION (TYPE Z-2) (AERIALLY DEPOSITED LEAD)	274	CY
STRUCTURE EXCAVATION (RETAINING WALL)	256	CY
STRUCTURE BACKFILL (RETAINING WALL)	975	CY
STRUCTURAL CONCRETE (RETAINING WALL)	305	CY
BAR REINFORCING STEEL (RETAINING WALL)	53,454	LB
GEOCOMPOSITE DRAIN	1230	SQFT
CHAIN LINK RAILING (TYPE 7)	340	LF
CONCRETE BARRIER (TYPE 732A)	340	LF
FURNISH PILING (CLASS 200) (ALTERNATIVE W)	5127	LF
DRIVE PILE (CLASS 200) (ALTERNATIVE W)	146	EA
ARCHITECTURAL TREATMENT	2031	SQFT

DESIGN OVERSIGHT 7/14/16 SIGN OFF DATE	DESIGN	BY G. Iwamoto	CHECKED M. Vargas	LOAD & RESISTANCE FACTOR DESIGN	LIVE LOADING: HL-93
	DETAILS	BY H. Li	CHECKED M. Vargas	LAYOUT BY H. Li	CHECKED G. Yu
	QUANTITIES	BY G. Iwamoto	CHECKED E. Okada	SPECIFICATIONS BY D. Desai	PLANS AND SPECS COMPARED D. Desai

PREPARED FOR THE STATE OF CALIFORNIA DEPARTMENT OF TRANSPORTATION

Erik Okada
PROJECT ENGINEER

BRIDGE NO. 27E0071
POST MILES 2.54

RETAINING WALL NO. 6
PLAN AND ELEVATION NO. 1

DESIGN GENERAL PLAN SHEET (ENGLISH) (REV. 06-01-09)

ORIGINAL SCALE IN INCHES FOR REDUCED PLANS 0 1 2 3

UNIT: 0000
PROJECT NUMBER & PHASE: 04140005521

DISREGARD PRINTS BEARING EARLIER REVISION DATES

REVISION DATES (PRELIMINARY STAGE ONLY)

SHEET 20 OF 33

FILE => 020-28-0100r-a-rw 1o06.dgn

USERNAME => hulli DATE PLOTTED => 7/14/2016 TIME PLOTTED => 10:26:23 AM

DIST	COUNTY	ROUTE	POST MILES TOTAL PROJECT	SHEET No	TOTAL SHEETS
04	CC/Mrn	580	5.0/7.8, 0.0/3.3	527	579

REGISTERED CIVIL ENGINEER 7/14/16 DATE

7/26/16
PLANS APPROVAL DATE

REGISTERED PROFESSIONAL ENGINEER E. OKADA No. S4415 Exp. 6-30-18 STRUCTURAL STATE OF CALIFORNIA

The State of California or its officers or agents shall not be responsible for the accuracy or completeness of scanned copies of this plan sheet.

HNTB CORPORATION
1111 BROADWAY
9TH FLOOR
OAKLAND, CA 94607

BAY AREA TOLL AUTHORITY
375 BEALE STREET, SUITE 800
SAN FRANCISCO, CA 94105

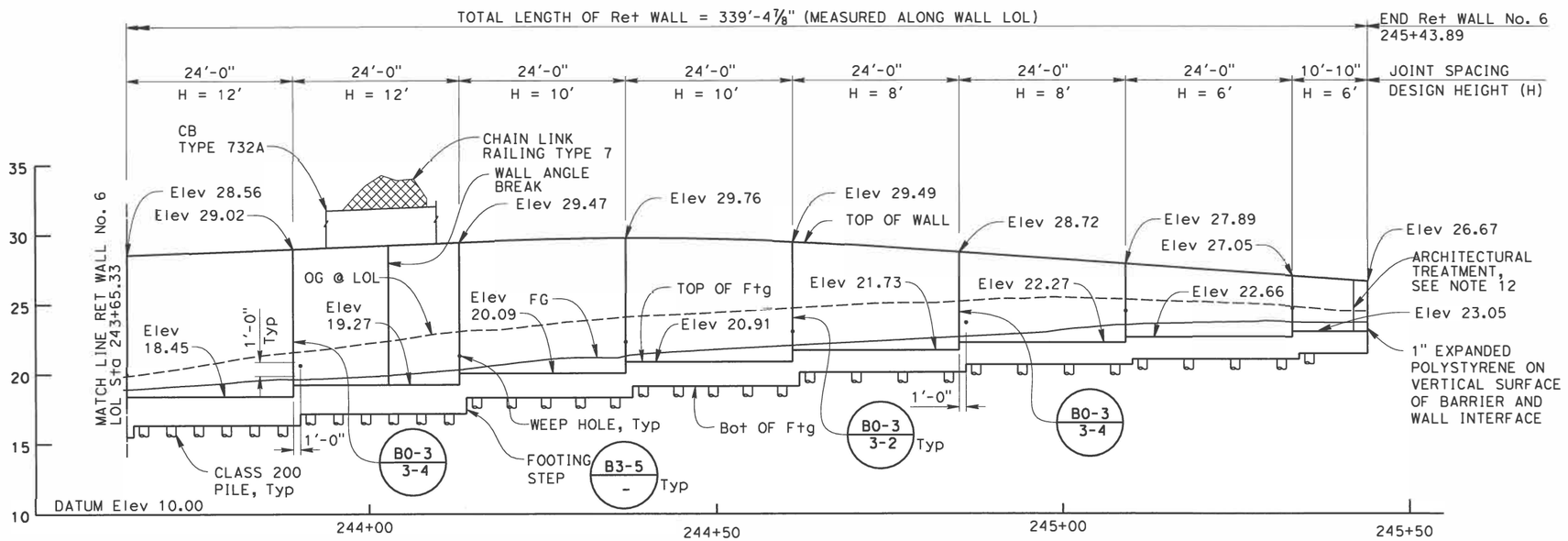

DEVELOPED ELEVATION

Horiz. 1"=10'-0"
Vert. 1"=5'-0"

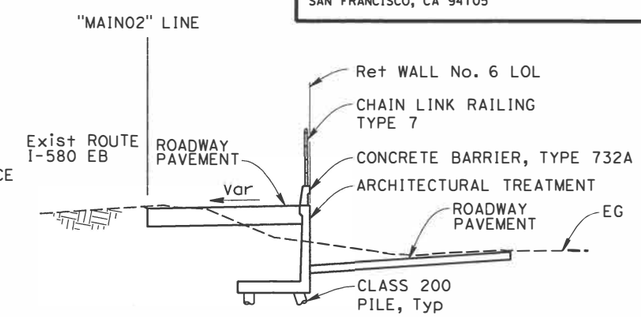

"MAIN02" 244+39.00 to "MAIN02" 245+42.00

TYPICAL SECTION

NO SCALE

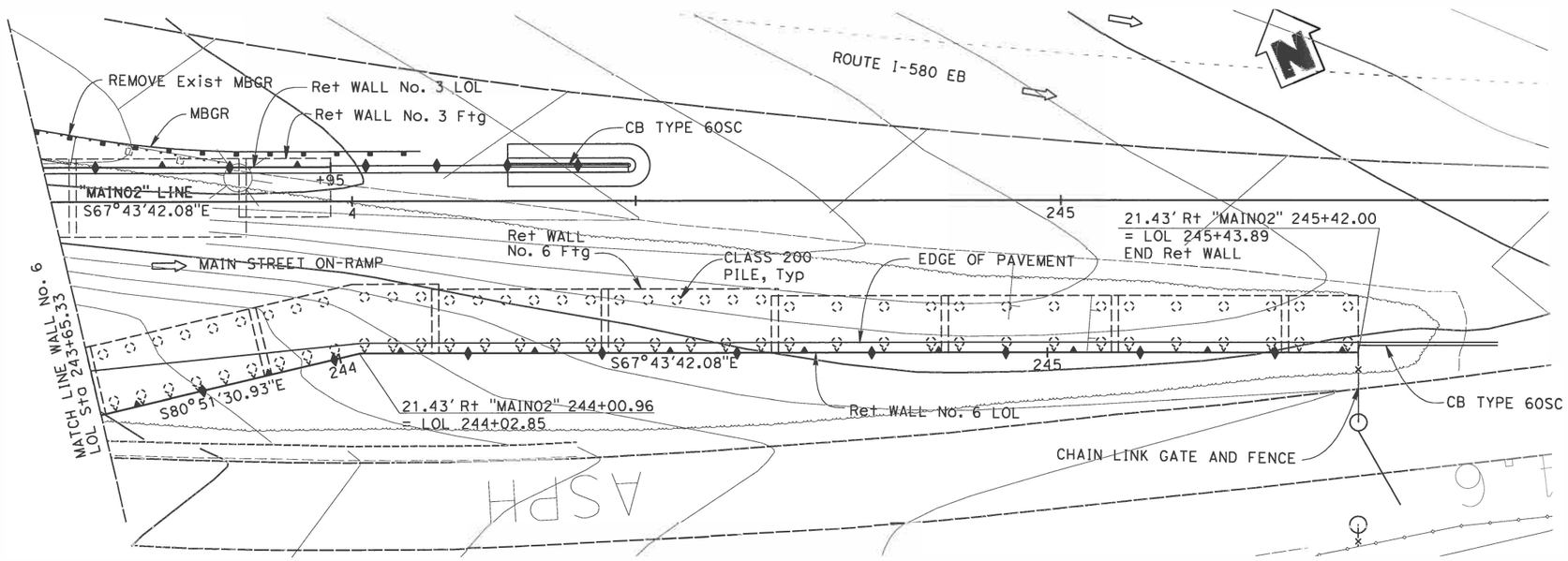

PLAN

1"=10'-0"

NOTES:

1. For roadway information see "ROADWAY PLANS".
2. For utility information see "UTILITY PLANS".
3. For drainage information see "DRAINAGE PLANS".
4. For wall stem joint details see 2010 Standard Plan B0-3.
5. Controlling field conditions to be verified prior to start of construction.
6. For wall and pile details not shown see 2010 Standard Plans B3-5, and sheet "RETAINING WALL NO. 6 -DETAILS".
7. For weephole and wall drain details see sheet "RETAINING WALL - DRAIN DETAILS".
8. For barrier type 60C (MOD) details, see sheet "CONCRETE BARRIER TYPE 60C (MOD)".
9. For barrier type 732A details, see 2010 Standard Plan RSP B11-55.
10. For chain link railing type 7 details, see 2010 Standard Plan B11-52.
11. For staging information, see "STAGE CONSTRUCTION PLANS".
12. For architectural treatment, see "ARCHITECTURAL PLANS".

LEGEND:

- INDICATES DIRECTION OF TRAFFIC
- CONCRETE RETAINING WALL
- CONCRETE BARRIER
- CONCRETE RETAINING WALL WITH CONCRETE BARRIER
- INDICATES PILE
- INDICATES BATTERED PILE

DESIGN OVERSIGHT 7/14/16 SIGN OFF DATE

	BY	CHECKED
DESIGN	G. Iwamoto	M. Vargas
DETAILS	H. Li	M. Vargas
QUANTITIES	G. Iwamoto	E. Okada

LOAD & RESISTANCE FACTOR DESIGN — LIVE LOADING: HL-93

	BY	CHECKED
LAYOUT	H. Li	G. Yu
SPECIFICATIONS	D. Desai	PLANS AND SPECS COMPARED D. Desai

PREPARED FOR THE STATE OF CALIFORNIA DEPARTMENT OF TRANSPORTATION

Erik Okada
PROJECT ENGINEER

BRIDGE NO. 27E0071
POST MILES 2.54

RETAINING WALL NO. 6
PLAN AND ELEVATION NO. 2

DESIGN GENERAL PLAN SHEET (ENGLISH) (REV. 06-01-09)

ORIGINAL SCALE IN INCHES FOR REDUCED PLANS 0 1 2 3

UNIT: 0000
PROJECT NUMBER & PHASE: 04140005521

DISREGARD PRINTS BEARING EARLIER REVISION DATES

REVISION DATES (PRELIMINARY STAGE ONLY)

SHEET 21 OF 33

FILE => 021-28-0100r-a-rw 1o7.dgn

USERNAME => hu111 DATE PLOTTED => 7/14/2016 TIME PLOTTED => 10:26:24 AM

DIST	COUNTY	ROUTE	POST MILES TOTAL PROJECT	SHEET No	TOTAL SHEETS
04	CC/Mrn	580	5.0/7.8, 0.0/3.3	528	579

REGISTERED CIVIL ENGINEER 7/14/16 DATE

7/26/16
PLANS APPROVAL DATE

REGISTERED PROFESSIONAL ENGINEER E. OKADA No. S4415 Exp. 6-30-18 STRUCTURAL STATE OF CALIFORNIA

The State of California or its officers or agents shall not be responsible for the accuracy or completeness of scanned copies of this plan sheet.

HNTB CORPORATION
1111 BROADWAY
9TH FLOOR
OAKLAND, CA 94607

BAY AREA TOLL AUTHORITY
375 BEALE STREET, SUITE 800
SAN FRANCISCO, CA 94105

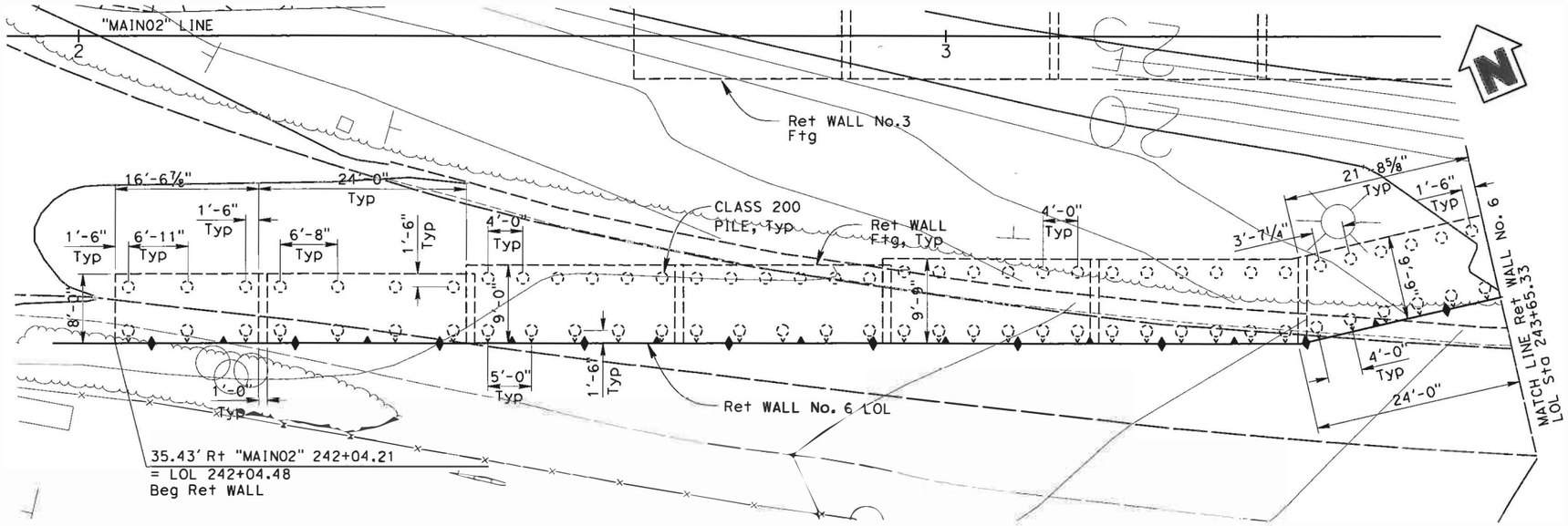

PARTIAL PLAN

1/8"=1'-0"

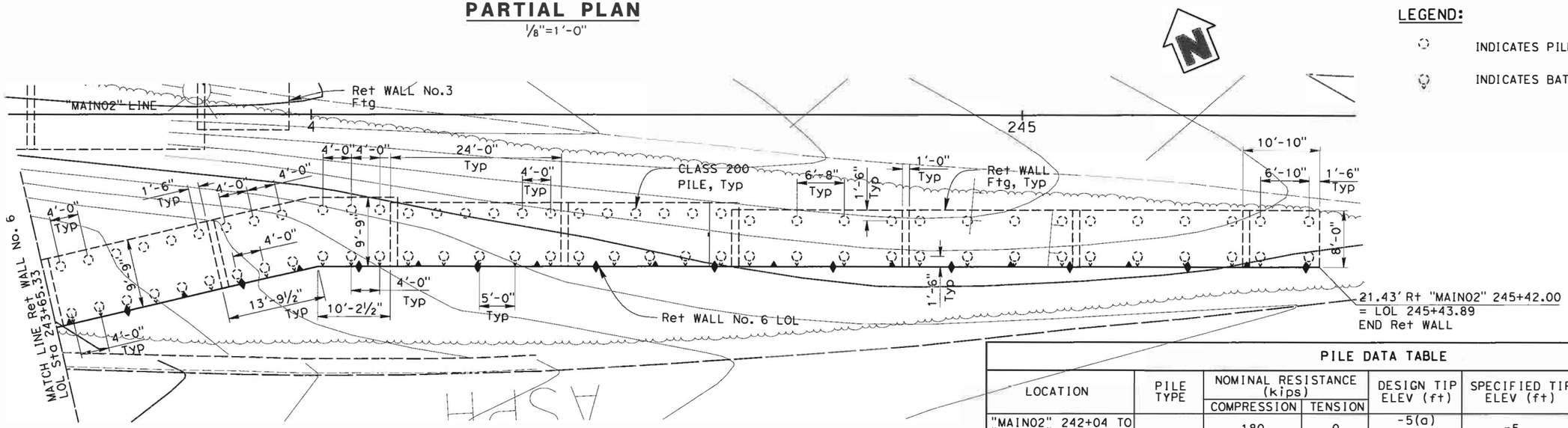

PARTIAL PLAN

1/8"=1'-0"

NOTES:

1. Shallow bedrock is anticipated between "MAIN02" Station 242+04 and 242+50. There should be at least 15 feet of pile below cut-off elevation for lateral capacity. Therefore drilling may be required to attain required tip elevation. Holes may be drilled with a diameter not greater than the least dimension of the pile to the specified depth before driving piles.

LEGEND:

INDICATES PILE

INDICATES BATTERED PILE

PILE DATA TABLE

LOCATION	PILE TYPE	NOMINAL RESISTANCE (kips) COMPRESSION	NOMINAL RESISTANCE (kips) TENSION	DESIGN TIP ELEV (ft)	SPECIFIED TIP ELEV (ft)	REQUIRED NOMINAL DRIVING RESISTANCE (kips)
"MAIN02" 242+04 TO "MAIN02" 242+50	CLASS 200 Alt "W"	180	0	-5(a) -2(b)	-5	250
"MAIN02" 242+50 TO "MAIN02" 243+00		180	0	-10(a) -7(b)	-10	280
"MAIN02" 243+00 TO "MAIN02" 243+50		180	0	-14(a) -11(b)	-14	315
"MAIN02" 243+50 TO "MAIN02" 244+00		180	0	-17(a) -14(b)	-17	340
"MAIN02" 244+00 TO "MAIN02" 244+75		180	0	-20(a) -17(b)	-20	385
"MAIN02" 244+75 TO "MAIN02" 245+42		180	0	-24(a) -21(b)	-24	420

NOTE: Design tip elevations are controlled by (a) Compression, and (b) lateral, respectively.

GEOTECHNICAL PROFESSIONAL APPROVAL DATE

DESIGN OVERSIGHT 7/14/16 SIGN OFF DATE

SCALE:	VERT.DATUM	HORZ.DATUM
PHOTOGRAMMETRY AS OF:	ALIGNMENT TIES	
SURVEYED BY	DRAFTED BY	
FIELD CHECKED BY	CHECKED BY	

	BY	CHECKED
DESIGN	G. Iwamoto	M. Vargas
DETAILS	H. Li	M. Vargas
QUANTITIES	G. Iwamoto	E. Okada

PREPARED FOR THE STATE OF CALIFORNIA DEPARTMENT OF TRANSPORTATION

Erik Okada
PROJECT ENGINEER

BRIDGE NO. 27E0071
POST MILES 2.54

RETAINING WALL NO. 6
FOUNDATION PLAN

FOUNDATION PLAN SHEET (ENGLISH) (REV. 03/14/12)

ORIGINAL SCALE IN INCHES FOR REDUCED PLANS 0 1 2 3

UNIT: 0000
PROJECT NUMBER & PHASE: 04140005521 CONTRACT NO.: 04-2J6804

DISREGARD PRINTS BEARING EARLIER REVISION DATES

REVISION DATES

SHEET 22 OF 33

FILE => 022-28-0100r-a-rw_fp101.dgn

USERNAME => hulli DATE PLOTTED => 7/14/2016 TIME PLOTTED => 10:26:25 AM

TABLE OF WALL DIMENSIONS AND REINFORCING STEEL				
DESIGN H	6′	8′	10′	12′
W	8′-0"	8′-0"	9′-0"	9′-9"
F	1′-7"	1′-7"	1′-9"	2′-1"
ⓐ BARS	#6 @ 8"	#6 @ 8"	#7 @ 8"	#8 @ 6"
ⓑ BARS	#6 @ 8"	#6 @ 8"	#6 @ 6"	#6 @ 5"
ⓔ BARS	8 - #6	8 - #7	10 - #7	6 - #6

CHAIN LINK RAILING NOT SHOWN FOR CLARITY

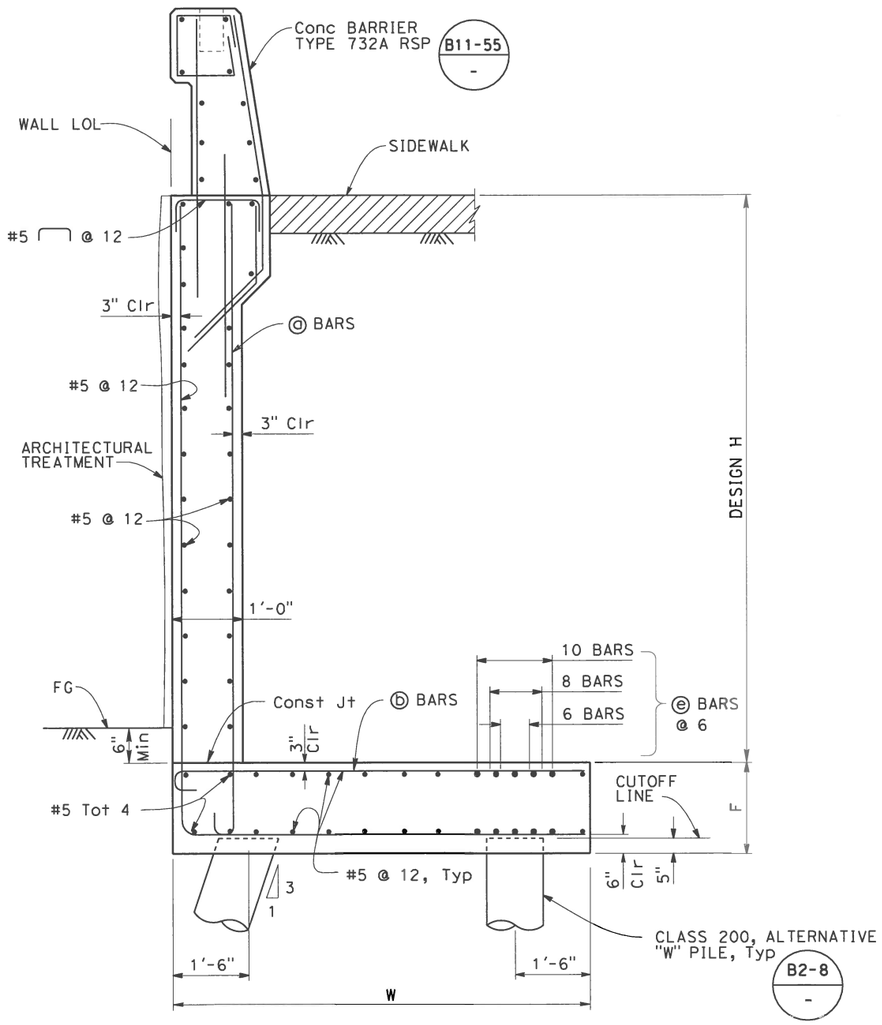

WALL SECTION

NO SCALE

DIST	COUNTY	ROUTE	POST MILES TOTAL PROJECT	SHEET No	TOTAL SHEETS
04	CC/Mrn	580	5.0/7.8, 0.0/3.3	529	579

REGISTERED CIVIL ENGINEER — DATE 7/14/16

PLANS APPROVAL DATE 7/26/16

REGISTERED PROFESSIONAL ENGINEER — E. OKADA — No. 54415 — Exp. 6-30-18 — STRUCTURAL — STATE OF CALIFORNIA

The State of California or its officers or agents shall not be responsible for the accuracy or completeness of scanned copies of this plan sheet.

HNTB CORPORATION
1111 BROADWAY
9TH FLOOR
OAKLAND, CA 94607

BAY AREA TOLL AUTHORITY
375 BEALE STREET, SUITE 800
SAN FRANCISCO, CA 94105

DESIGN OVERSIGHT
7/14/16
SIGN OFF DATE

	BY	CHECKED
DESIGN	G. Iwamoto	M. Vargas
DETAILS	H. Li	M. Vargas
QUANTITIES	G. Iwamoto	E. Okada

PREPARED FOR THE STATE OF CALIFORNIA DEPARTMENT OF TRANSPORTATION

Erik Okada
PROJECT ENGINEER

BRIDGE NO. 27E0071
POST MILES 2.54

RETAINING WALL NO. 6
DETAILS

DESIGN DETAIL SHEET (ENGLISH) (REV. 03/14/12)

ORIGINAL SCALE IN INCHES FOR REDUCED PLANS 0 1 2 3

UNIT: 0000
PROJECT NUMBER & PHASE: 04140005521
CONTRACT NO.: 04-2J6804

DISREGARD PRINTS BEARING EARLIER REVISION DATES

REVISION DATES

SHEET 23 OF 33

FILE => 023-28-0100r-a-rwdt17.dgn

USERNAME => $USER$ DATE PLOTTED => $DATE$ TIME PLOTTED => $TIME$

DIST	COUNTY	ROUTE	POST MILES TOTAL PROJECT	SHEET No	TOTAL SHEETS
04	CC/Mrn	580	5.0/7.8, 0.0/3.3	530	579

REGISTERED CIVIL ENGINEER — DATE 7/14/16

7/26/16
PLANS APPROVAL DATE

REGISTERED PROFESSIONAL ENGINEER — E. OKADA — No. S4415 — Exp. 6-30-18 — STRUCTURAL — STATE OF CALIFORNIA

The State of California or its officers or agents shall not be responsible for the accuracy or completeness of scanned copies of this plan sheet.

HNTB CORPORATION
1111 BROADWAY
9TH FLOOR
OAKLAND, CA 94607

BAY AREA TOLL AUTHORITY
375 BEALE STREET, SUITE 800
SAN FRANCISCO, CA 94105

RETAINING WALL NO. 7 QUANTITIES

STRUCTURE EXCAVATION (TYPE Z-2) (AERIALLY DEPOSIT LEAD)	191	CY
STRUCTURE EXCAVATION (SOIL NAIL WALL)	451	CY
STRUCTURE BACKFILL (RETAINING WALL)	9	CY
STRUCTURAL SHOTCRETE	29	CY
STRUCTURAL CONCRETE (RETAINING WALL)	87	CY
BAR REINFORCING STEEL (RETAINING WALL)	11,563	LB
SOIL NAIL	2,665	LF
SOIL NAIL TEMPORARY	1,015	LF
REMOVE RETAINING WALL	133	CY
REMOVE STEEL PILES	132	LF
MINOR CONCRETE (GUTTER)	128	LF
GEOCOMPOSITE DRAIN	600	SF
CABLE RAILING	127	LF
CONCRETE BARRIER (TYPE 60D)	125	LF
ARCHITECTURAL TREATMENT	2,560	SQFT

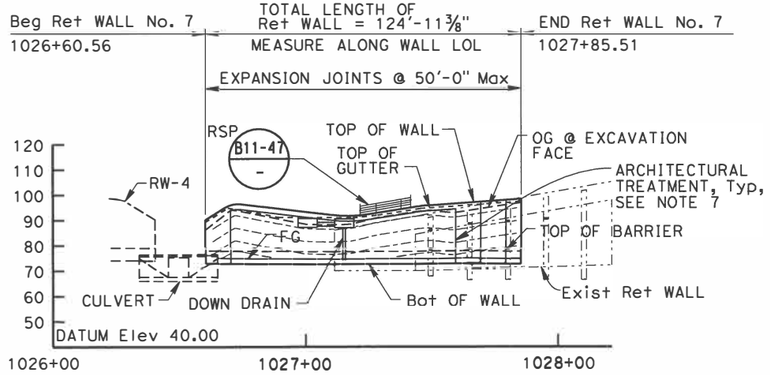

MIRRORED ELEVATION
1"=30'-0"

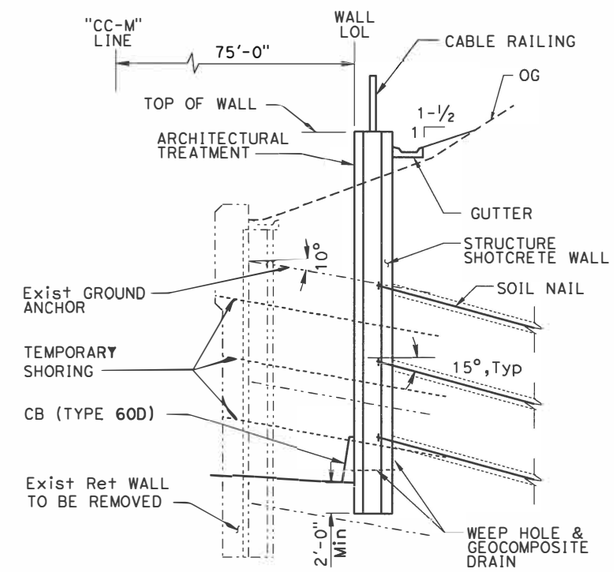

TYPICAL SECTION
NO SCALE

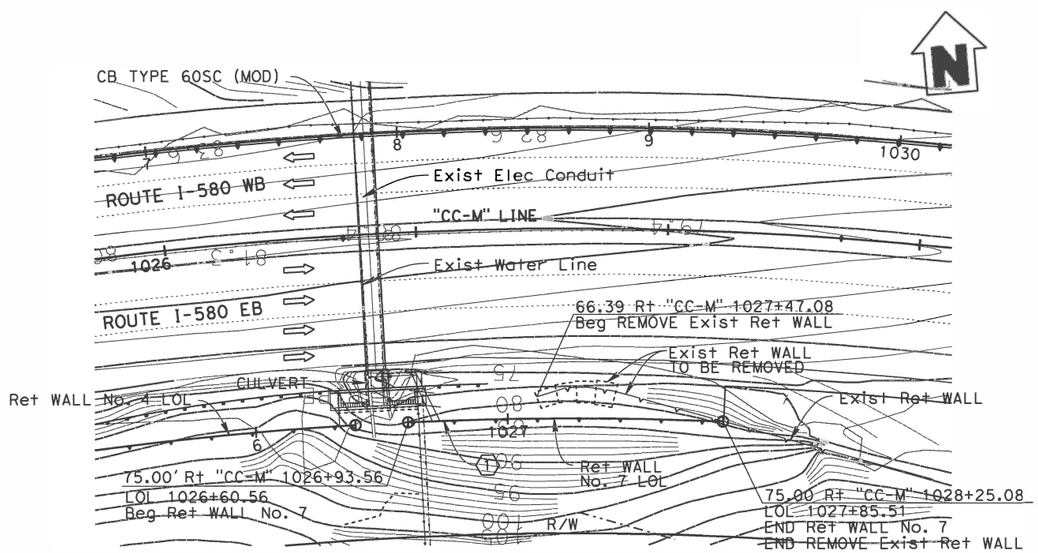

PLAN
1"=30'-0"

CURVE DATA				
No.	R	Δ	T	L
1	1425'	5°01'25"	62.51'	124.95'

LEGEND:

- INDICATES DIRECTION OF TRAFFIC
- CONCRETE RETAINING WALL
- CONCRETE BARRIER

NOTES:

1. For roadway information see "ROADWAY PLANS".
2. For utility information see "UTILITY PLANS".
3. For drainage information see "DRAINAGE PLANS".
4. Controlling field conditions to be verified prior to begin of construction work.
5. For weephole and wall drain details see sheet "RETAINING WALL NO. 7 - WALL DETAILS 2".
6. Contractor shall install temporary shoring prior to excavating soil behind exist wall.
7. For architectural treatment, see "ARCHITECTURAL PLANS".

DESIGN OVERSIGHT 7/14/16 SIGN OFF DATE

	BY	CHECKED
DESIGN	G. Yu	M. Vargas
DETAILS	H. Li	G. Yu
QUANTITIES	M. Vargas	G. Yu

LOAD & RESISTANCE FACTOR DESIGN — LIVE LOADING: HL-93
LAYOUT — H. Li — CHECKED M. Vargas
SPECIFICATIONS — D. Desai — PLANS AND SPECS COMPARED D. Desai

PREPARED FOR THE STATE OF CALIFORNIA DEPARTMENT OF TRANSPORTATION

Erik Okada
PROJECT ENGINEER

BRIDGE NO. 28E0217
POST MILES 5.92

RETAINING WALL NO. 7
PLAN AND ELEVATION

DESIGN GENERAL PLAN SHEET (ENGLISH) (REV. 06-01-09)

ORIGINAL SCALE IN INCHES FOR REDUCED PLANS 0 1 2 3

UNIT: 0000
PROJECT NUMBER & PHASE: 04140005521

DISREGARD PRINTS BEARING EARLIER REVISION DATES

REVISION DATES (PRELIMINARY STAGE ONLY)

SHEET 24 OF 33

FILE => 024-28-0100r-a-rw_lo8.dgn

USERNAME => hulii DATE PLOTTED => 7/14/2016 TIME PLOTTED => 10:41:43 AM

DIST	COUNTY	ROUTE	POST MILES TOTAL PROJECT	SHEET No	TOTAL SHEETS
04	CC/Mrn	580	5.0/7.8, 0.0/3.3	531	579

REGISTERED CIVIL ENGINEER 7/14/16 DATE

7/26/16
PLANS APPROVAL DATE

REGISTERED PROFESSIONAL ENGINEER E. OKADA No. 54415 Exp. 6-30-18 STRUCTURAL STATE OF CALIFORNIA

The State of California or its officers or agents shall not be responsible for the accuracy or completeness of scanned copies of this plan sheet.

HNTB CORPORATION
1111 BROADWAY
9TH FLOOR
OAKLAND, CA 94607

BAY AREA TOLL AUTHORITY
375 BEALE STREET, SUITE 800
SAN FRANCISCO, CA 94105

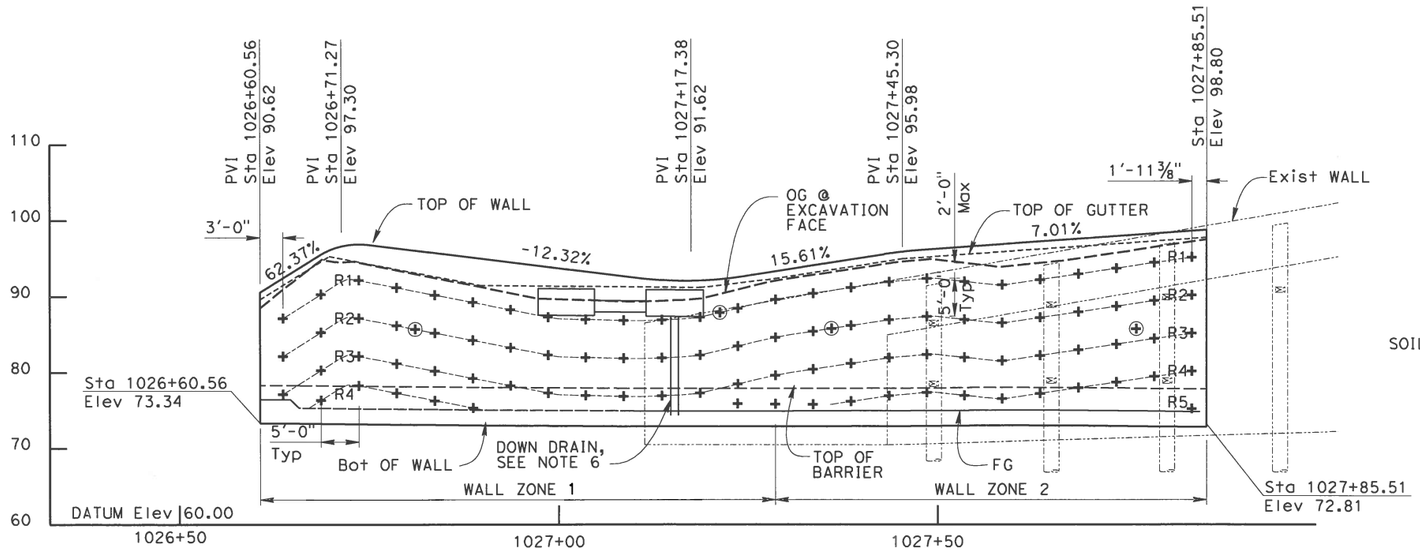

MIRRORED ELEVATION
1"=10'-0"

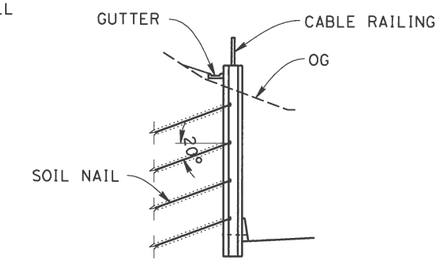

@ STA 1027+85

TYPICAL SECTION
1"=10'-0"

SOIL NAIL SCHEDULE

WALL ZONE	ROW	Le	Deg	S	BAR #	Pn	DESCRIPTION
1	R1-R2	35	15	5	9	3.02	SILTY SAND
	R3-R4	25	15	5	9	3.02	SILTY SAND
2	R1-R2	30	15	5	9	2.26	HIGHLY WEATHERED SANDSTONE
	R3-R5	20	15	5	9	2.94	MODERATELY WEATHERED SANDSTONE

NOTES:

1. The contractor shall verify all controlling field dimensions before ordering or fabricating any material.
2. The dimension on the plans are approximate. Prior to installing soil nails, contractor shall verify the existing wall and pile locations.
3. Install soil nail normal to retaining wall LOL.
4. Max 5'-0" Excavation lift.
5. The contractor shall provide and maintain soil stablity above and below soil nail anchors.
6. For Down Drain Details see "DRAIN DETAILS NO. 2" sheet.

LEGEND:

- INDICATES EXIST TIE-BACK ANCHOR
- + INDICATES PRODUCTION NAIL
- ⊕ INDICATES TEST NAIL
- INDICATES EXIST STRUCTURE
- INDICATES NAIL ROW DESIGNATION LINE
- Le: EMBEDMENT LENGTH (Ft)
- Deg°: NAIL DECLINATION (Deg)
- S: HORIZONTAL SPACING (Ft)
- BAR#: MINIMUM SOIL NAIL BAR SIZE
- Pn: NOMINAL PULLOUT RESISTANCE (KLF)

DESIGN OVERSIGHT
7/14/16
SIGN OFF DATE

	BY	CHECKED
DESIGN	G. Yu	M. Vargas
DETAILS	H. Li	M. Vargas
QUANTITIES	G. Yu	M. Vargas

PREPARED FOR THE STATE OF CALIFORNIA DEPARTMENT OF TRANSPORTATION

Erik Okada
PROJECT ENGINEER

BRIDGE NO. 28E0217
POST MILES 5.92

RETAINING WALL NO. 7
SOIL NAIL LAYOUT

DESIGN DETAIL SHEET (ENGLISH) (REV. 03/14/12)

ORIGINAL SCALE IN INCHES FOR REDUCED PLANS 0 1 2 3

UNIT: 0000
PROJECT NUMBER & PHASE: 04140005521 CONTRACT NO.: 04-2J6804

DISREGARD PRINTS BEARING EARLIER REVISION DATES

REVISION DATES

SHEET 25 OF 33

FILE => 025-28-0100r-a-rwdt18.dgn

USERNAME => $USER$ DATE PLOTTED => $DATE$ TIME PLOTTED => $TIME$

DIST	COUNTY	ROUTE	POST MILES TOTAL PROJECT	SHEET No	TOTAL SHEETS
04	CC/Mrn	580	5.0/7.8, 0.0/3.3	532	579

REGISTERED CIVIL ENGINEER 7/14/16 DATE

7/26/16
PLANS APPROVAL DATE

REGISTERED PROFESSIONAL ENGINEER E. OKADA No. S4415 Exp. 6-30-18 STRUCTURAL STATE OF CALIFORNIA

The State of California or its officers or agents shall not be responsible for the accuracy or completeness of scanned copies of this plan sheet.

HNTB CORPORATION
1111 BROADWAY
9TH FLOOR
OAKLAND, CA 94607

BAY AREA TOLL AUTHORITY
375 BEALE STREET, SUITE 800
SAN FRANCISCO, CA 94105

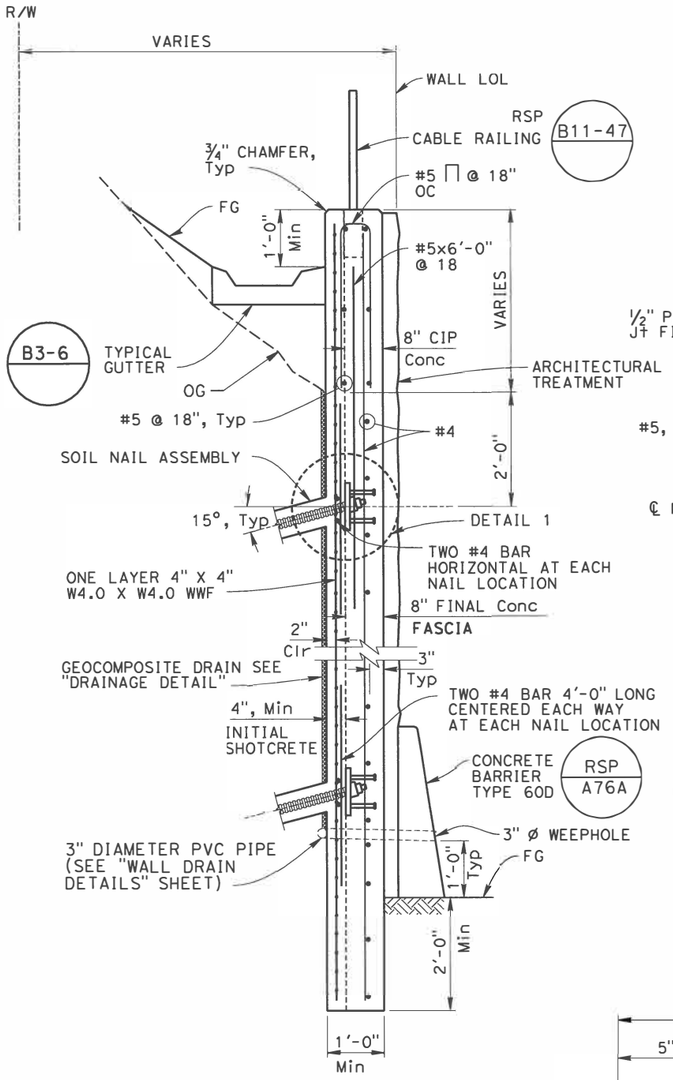

TYPICAL SECTION
3/4" = 1'-0"

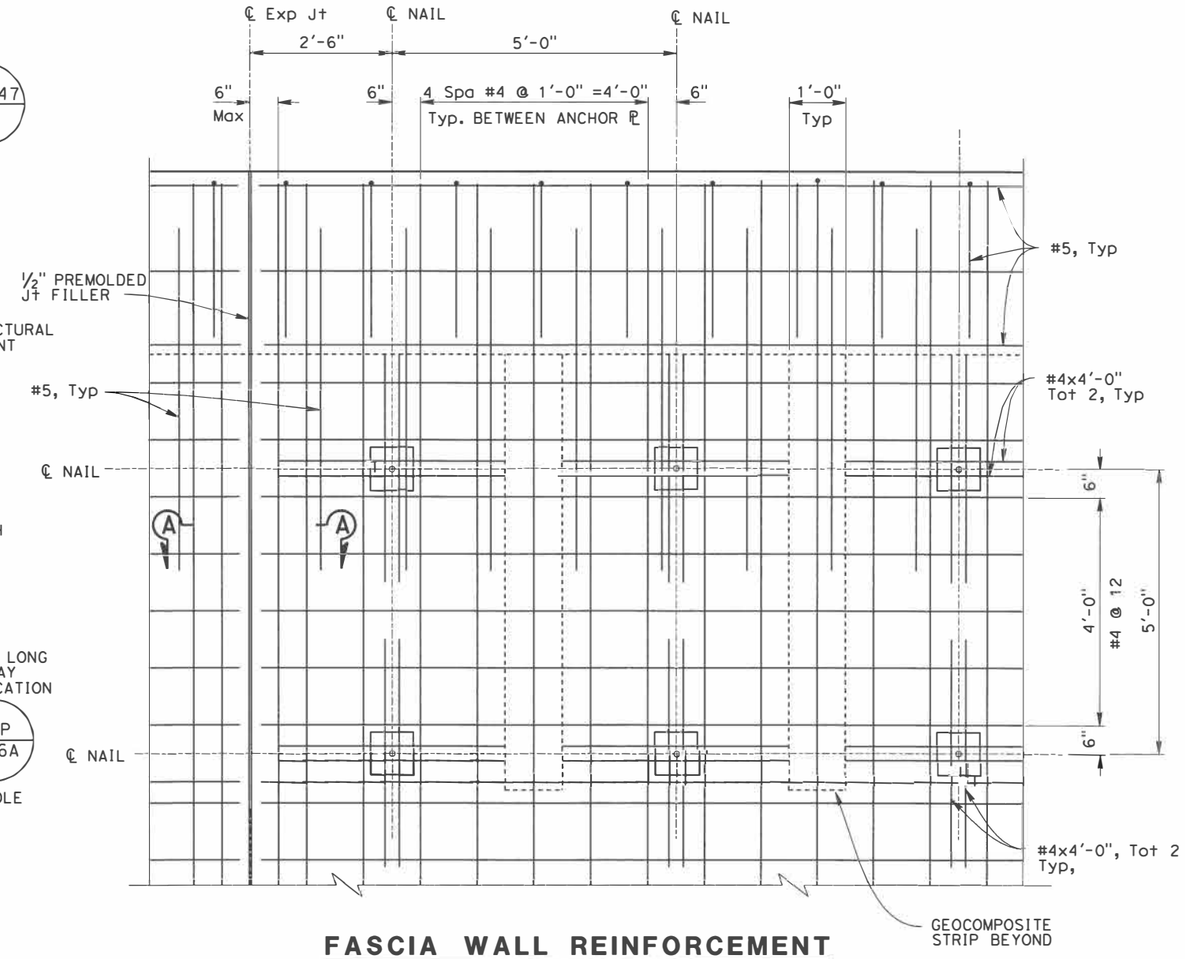

FASCIA WALL REINFORCEMENT
3/4" = 1'-0"

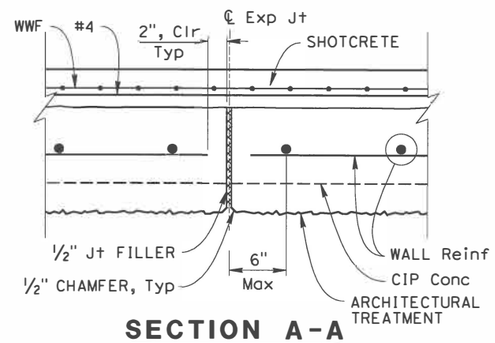

SECTION A-A
1 1/2" = 1'-0"

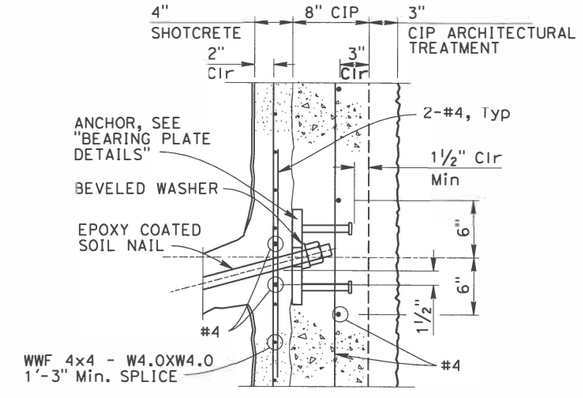

DETAIL 1
1 1/2" = 1'-0"

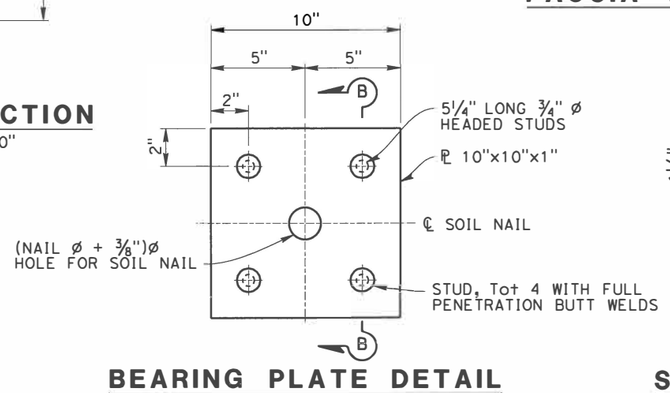

BEARING PLATE DETAIL
3" = 1'-0"

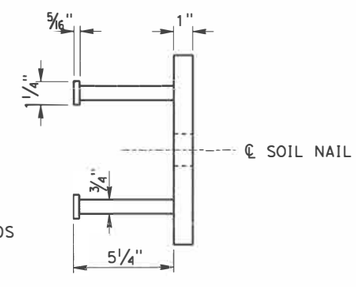

SECTION B-B
3" = 1'-0"

NOTES:

1. For nail spacing, nail length and nail size see "RETAINING WALL NO. 7 - SOIL NAIL LAYOUT" sheets.
2. For Gutter Drain Inlet and Down Drain locations see Drainage Plans.
3. The Vertical and Horizontal Construction Joints in the Initial Shotcrete Layer shall be located a minimum of 1'-6" from adjacent Soil Nails.
4. Lap splice length for rebar shall be equal to 48 bar diameters.
5. Lap splice length for geocomposite drain shall be 12".
6. Expansion Joint location, See "PLAN AND ELEVATION" sheet.
7. Expansion Joint in CIP concrete facing only.

DESIGN OVERSIGHT
7/14/16
SIGN OFF DATE

	BY	CHECKED
DESIGN	G. Yu	M. Vargas
DETAILS	H. Li	G. Yu
QUANTITIES	G. Yu	M. Vargas

PREPARED FOR THE STATE OF CALIFORNIA DEPARTMENT OF TRANSPORTATION

Erik Okada
PROJECT ENGINEER

BRIDGE NO. 28E0216
POST MILES 5.92

RETAINING WALL NO. 7
SOIL NAIL DETAILS 1

DESIGN DETAIL SHEET (ENGLISH) (REV. 03/14/12)

ORIGINAL SCALE IN INCHES FOR REDUCED PLANS 0 1 2 3

UNIT: 0000
PROJECT NUMBER & PHASE: 04140005521
CONTRACT NO.: 04-2J6804

DISREGARD PRINTS BEARING EARLIER REVISION DATES

REVISION DATES

SHEET 26 OF 33

FILE => 026-28-01001-a-rwdt19.dgn

USERNAME => pu111 DATE PLOTTED => 7/14/2016 TIME PLOTTED => 10:26:31 AM

DIST	COUNTY	ROUTE	POST MILES TOTAL PROJECT	SHEET No	TOTAL SHEETS
04	CC/Mrn	580	5.0/7.8, 0.0/3.3	533	579

REGISTERED CIVIL ENGINEER — DATE 7/14/16

7/26/16
PLANS APPROVAL DATE

REGISTERED PROFESSIONAL ENGINEER — E. OKADA — No. S4415 — Exp. 6-30-18 — STRUCTURAL — STATE OF CALIFORNIA

The State of California or its officers or agents shall not be responsible for the accuracy or completeness of scanned copies of this plan sheet.

HNTB CORPORATION
1111 BROADWAY
9TH FLOOR
OAKLAND, CA 94607

BAY AREA TOLL AUTHORITY
375 BEALE STREET, SUITE 800
SAN FRANCISCO, CA 94105

Notes:

1. The Le'T', embedment length of Test Nails, Shall be equal to two thirds of the embedment length, Le of adjacent Soil Nail assemblies, but not less than 13 feet.
2. Contractor is responsible for selecting test nail bar diameter, and the total length to accommodate the jacking equipment for the Test Soil Nail.
3. Reinforcement required for proof testing, but not shown. For reinforcement, see "SOIL NAIL DETAILS 1" sheet.
4. The centralizer shall be made from a plastic material and attached to the nail in a way that will not impede the free flow of grout. Centralizer spacing per Special Provisions.
5. Minimum 2" diameter blockout is required for pullout testing. Verification, Proof Test, and Design Pullout Resistance see note 7.
6. For location of Proof Test Soil Nail Assemblies, see "RETAINING WALL NO. 7 - SOIL NAIL LAYOUT" sheets. Additional Proof Test Soil Nails will be installed as directed by the Engineer, and tested per Special Provisions.
7. Soil Nail Testing:
   Design Pullout Resistance, 0-5 feet, Qd = 1500 lb/ft; below 5 feet Qd = 2250 lb/ft.
   Refer to LOTB and Final Foundation Report for subsurface information.

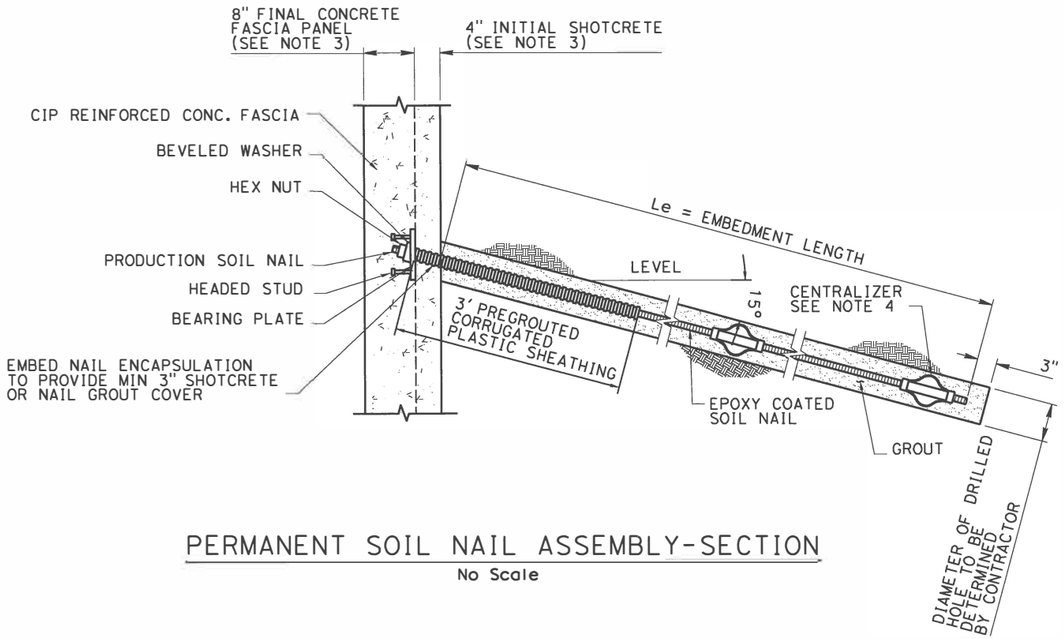

PERMANENT SOIL NAIL ASSEMBLY-SECTION

No Scale

NOTES:

1. Bottom of wall to be placed against undisturbed material
2. Center of geocomposite strips shall be centered vertically between soil nail assemblies
3. Indicates soil nail locations

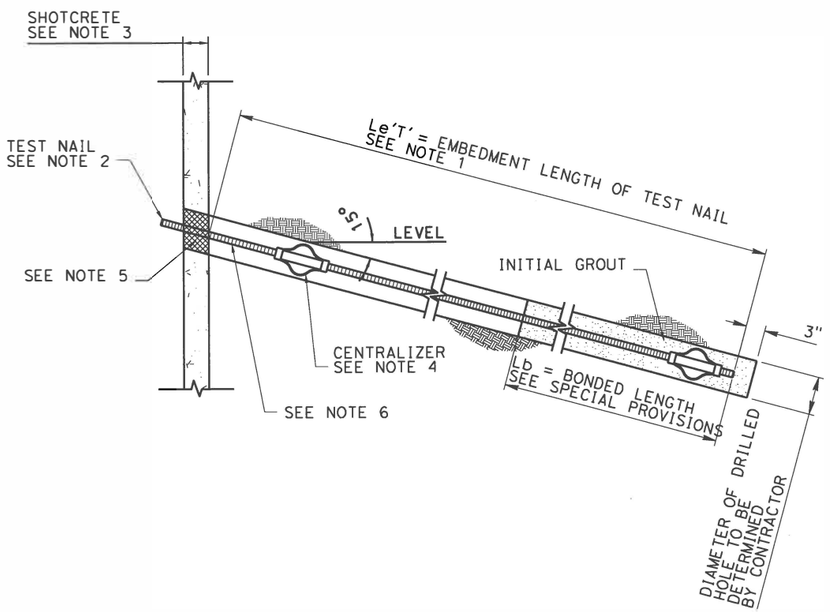

VERIFICATION AND PROOF TEST SOIL NAIL ASSEMBLY

No Scale

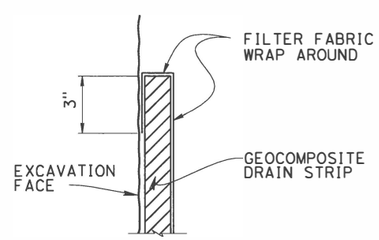

SECTION A-A

NO SCALE

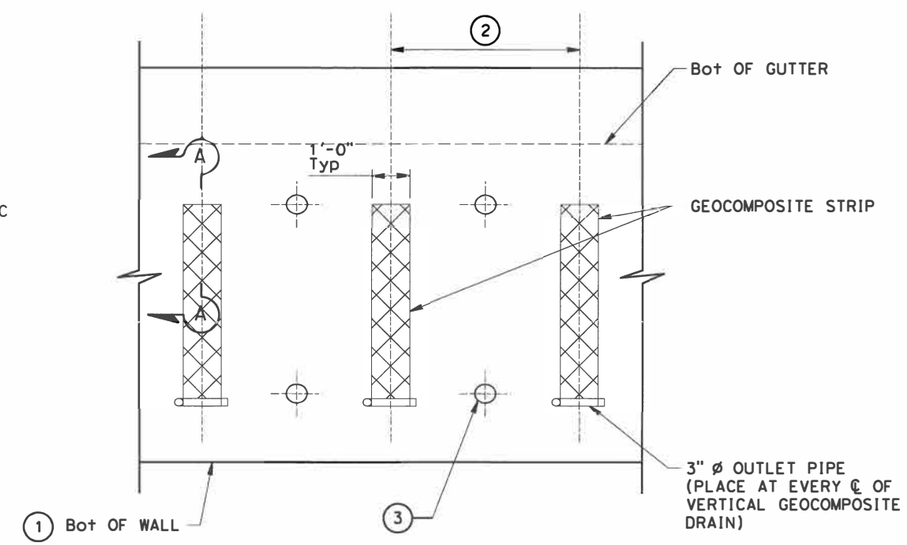

WALL PART ELEVATION

No Scale

DESIGN OVERSIGHT 7/14/16 SIGN OFF DATE	DESIGN	BY G. Yu	CHECKED M. Vargas
	DE TALS	BY H. Li	CHECKED G. Yu
	QUANTITIES	BY G. Yu	CHECKED M. Vargas

PREPARED FOR THE STATE OF CALIFORNIA DEPARTMENT OF TRANSPORTATION

Erik Okada — PROJECT ENGINEER

BRIDGE NO. 28E0216 — POST MILES 5.92

RETAINING WALL NO. 7
SOIL NAIL DETAILS 2

DESIGN DETAIL SHEET (ENGLISH) (REV. 03/14/12)

ORIGINAL SCALE IN INCHES FOR REDUCED PLANS 0 1 2 3

UNIT: 0000
PROJECT NUMBER & PHASE: 04140005521 CONTRACT NO.: 04-2J6804

DISREGARD PRINTS BEARING EARLIER REVISION DATES

REVISION DATES

SHEET 27 OF 33

FILE => 027-28-01001-g-rwdt20.dgn

USERNAME => nuiit DATE PLOTTED => 7/14/2016 TIME PLOTTED => 10:26:32 AM

DIST	COUNTY	ROUTE	POST MILES TOTAL PROJECT	SHEET No.	TOTAL SHEETS
04	CC/Mrn	580	5.077.8, 0.0/3.3	534	579

REGISTERED CIVIL ENGINEER 7/14/16 DATE

7/26/16
PLANS APPROVAL DATE

REGISTERED PROFESSIONAL ENGINEER E. OKADA No. S4415 Exp. 6-30-18 STRUCTURAL STATE OF CALIFORNIA

The State of California or its officers or agents shall not be responsible for the accuracy or completeness of electronic copies of this plan sheet.

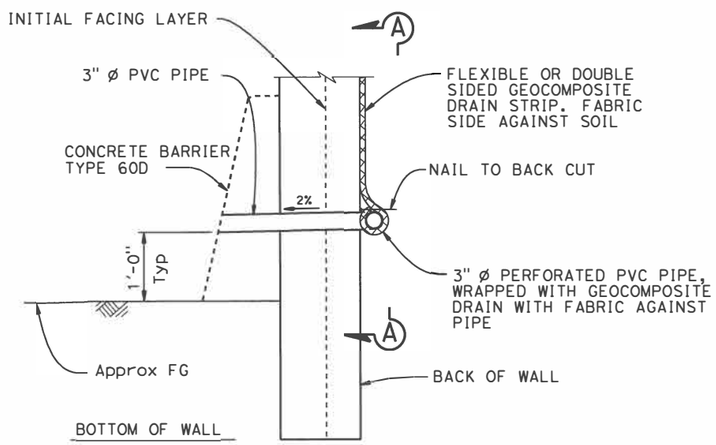

WALL DRAIN DETAIL AT WEEPHOLE
OPTION A
No scale

4

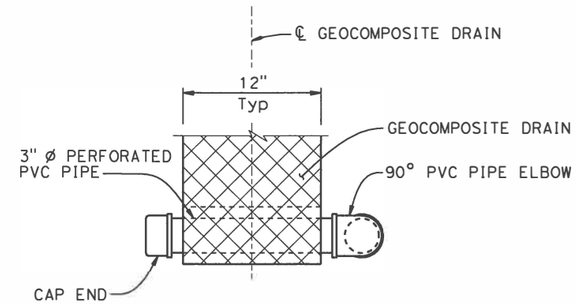

VIEW A-A
No scale

NOTES:

1. Geocomposite drain strip per Section 88 Geosynthetics of the Standard Specifications

3

1

2

STANDARD DRAWING		
FILE NO. xs12-021	APPROVAL DATE 7/14/16	

1 Delete wall drain detail at weephole Option B Detail.
2 Delete Section B-B. 4 Modify detail
3 Delete Note No. 2.

STATE OF CALIFORNIA DEPARTMENT OF TRANSPORTATION

DIVISION OF ENGINEERING SERVICES

BRIDGE NO. 28E0216
POST MILE 6.22

RETAINING WALL NO. 7
WALL DRAIN DETAILS

DS OSD 2147A (ENGLISH STANDARD DRAWING "XS" BORDER REV. (02-02-11)

ORIGINAL SCALE IN INCHES FOR REDUCED PLANS 0 1 2 3

UNIT: 0000
PROJECT NUMBER & PHASE: 04140005521 CONTRACT NO.: 04-2J6804

DISREGARD PRINTS BEARING EARLIER REVISION DATES

REVISION DATES

SHEET 28 OF 33

FILE => 028-28-01001-a-rwdt21.dgn

USERNAME => null DATE PLOTTED => 7/14/2016 TIME PLOTTED => 10:57:46 AM

DIST	COUNTY	ROUTE	POST MILES TOTAL PROJECT	SHEET No	TOTAL SHEETS
04	CC/Mrn	580	5.0/7.8, 0.0/3.3	535	579

REGISTERED CIVIL ENGINEER 7/14/16 DATE

7/26/16
PLANS APPROVAL DATE

REGISTERED PROFESSIONAL ENGINEER E. OKADA No. S4415 Exp. 6-30-18 STRUCTURAL STATE OF CALIFORNIA

The State of California or its officers or agents shall not be responsible for the accuracy or completeness of scanned copies of this plan sheet.

HNTB CORPORATION
1111 BROADWAY
9TH FLOOR
OAKLAND, CA 94607

BAY AREA TOLL AUTHORITY
375 BEALE STREET, SUITE 800
SAN FRANCISCO, CA 94105

LEGEND:

- • INDICATES TEMPORARY SOIL NAIL
- ⋈ INDICATES EXIST TIE BACK ANCHOR

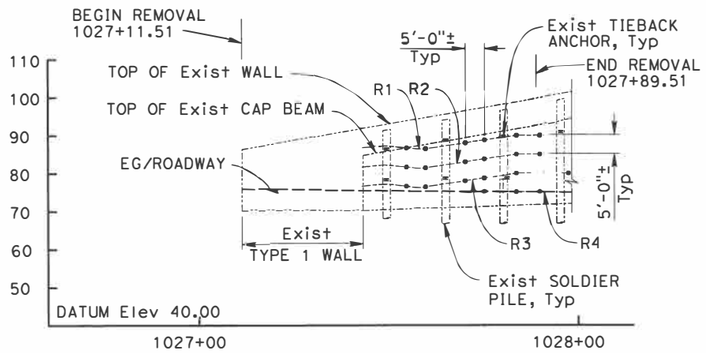

SUGGESTED TEMPORARY SOIL NAIL LAYOUT (MIRRORED)

1"=20'-0"

SOIL PROPERTIES

STATION LIMIT	DEPTH* (ft)	UNIT WEIGHT (pcf)	FRICTION ANGLE	COHESION (psf)	ULTIMATE BOND STRENGTH, q_u (psi)	SOIL TYPE
"CC-M" LINE Sta 1027+25 TO "CC-M" LINE Sta 1028+25	0-20	130	36	150	10	SILTY SAND
	20-40	130	40	300	13	MODERATELY WEATHERED SANDSTONE

* Note: The depth is the distance from the top of the wall.

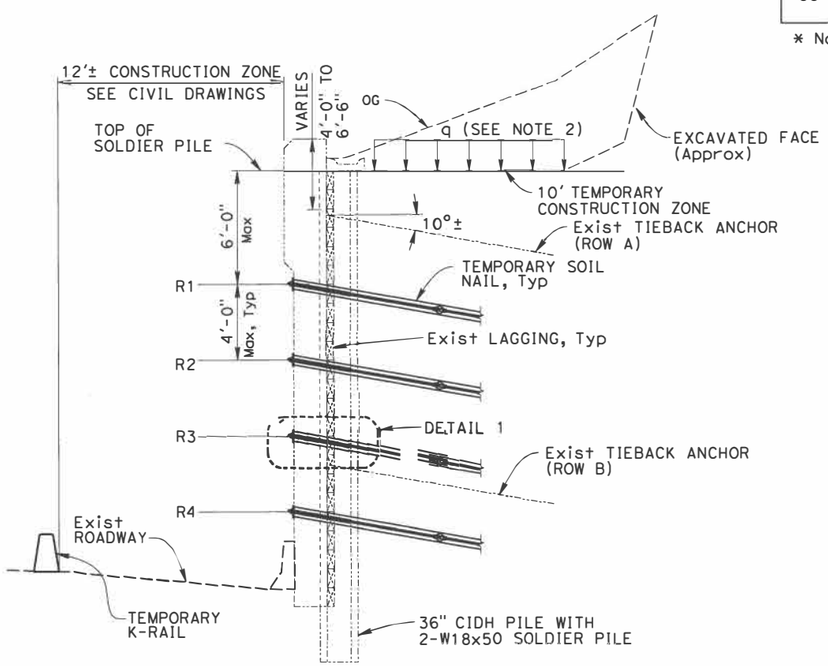

SUGGESTED TYPICAL SECTION

1/4"=1'-0"

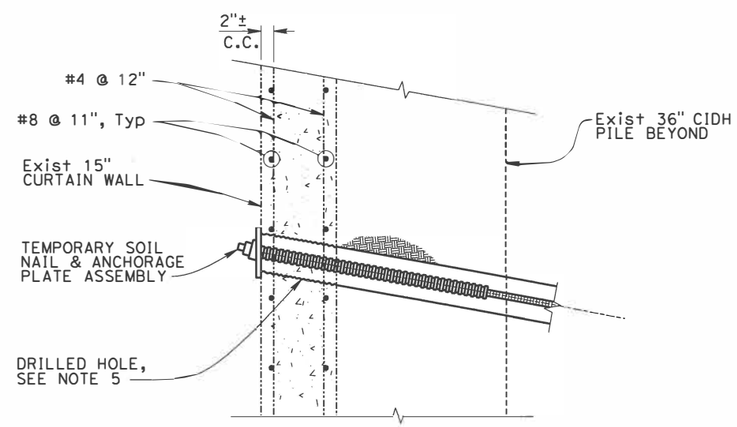

DETAIL 1

1"=1'-0"

TEMPORARY SUPPORT CONSTRUCTION NOTES:

1. The existing tie back anchor wall cannot self-support when the tie-backs are removed.
2. A temporary support system shall be installed prior to initiating excavation and construction of the soil nail retaining wall.
3. The details shown on this drawing including temporary nail spacing and nail locations are shown for illustration only. The contractor is allowed to develop their own temporary wall support system.
4. During wall construction, the contractor shall be responsible for monitoring and maintaining the existing wall stability during construction.
5. If attachment or drilling to existing wall is required, the contractor shall verify location of curtain Wall reinforcement and location of existing CIDH solider piles and tie-back anchors.
6. For limits of construction envelope in front of the wall, see civil drawings.

EXISTING WALL INFORMATION:

1. The maximum cantilevered wall height without support when tiebacks are cut is 8'-0".
2. The maximum allowed construction surcharge q = 500 psf. Higher loads may be used as long as the contractor determines that a higher load will not compromise the wall's stability and safety of the operation.
3. Maximum force per tieback:
   Tmax: ±90 kips (ROW A)
   Tmax: ±76 kips (ROW B)
4. The punching shear and flexural capacity of the wall are:
   V = 100 kips, M = 60 kip-ft.

DESIGN OVERSIGHT
7/14/16
SIGN OFF DATE

	BY	CHECKED
DESIGN	M. Vargas	G. Yu
DETAILS	H. Li	M. Vargas
QUANTITIES	M. Vargas	G. Yu

PREPARED FOR THE STATE OF CALIFORNIA DEPARTMENT OF TRANSPORTATION

Erik Okada
PROJECT ENGINEER

BRIDGE NO. 28E0215
POST MILES 5.92

RETAINING WALL NO. 7
TEMPORARY SHORING

DESIGN DETAIL SHEET (ENGLISH) (REV. 03/14/12)

ORIGINAL SCALE IN INCHES FOR REDUCED PLANS 0 1 2 3

UNIT: 0000
PROJECT NUMBER & PHASE: 04140005521 CONTRACT NO.: 04-2J6804

DISREGARD PRINTS BEARING EARLIER REVISION DATES

REVISION DATES

SHEET 29 OF 33

FILE => 029-28-0100r-a-rwdt22.dgn

USERNAME => hulil DATE PLOTTED => 7/14/2016 TIME PLOTTED => 10:26:33 AM

DIST	COUNTY	ROUTE	POST MILES TOTAL PROJECT	SHEET No	TOTAL SHEETS
04	CC/Mrn	580	5.0/7.8, 0.0/3.3	536	579

REGISTERED CIVIL ENGINEER 7/14/16 DATE

7/26/16
PLANS APPROVAL DATE

REGISTERED PROFESSIONAL ENGINEER E. OKADA No. S4415 Exp. 6-30-18 STRUCTURAL STATE OF CALIFORNIA

The State of California or its officers or agents shall not be responsible for the accuracy or completeness of scanned copies of this plan sheet.

HNTB CORPORATION
1111 BROADWAY
9TH FLOOR
OAKLAND, CA 94607

BAY AREA TOLL AUTHORITY
375 BEALE STREET, SUITE 800
SAN FRANCISCO, CA 94105

TABLE OF WALL DIMENSIONS AND REINFORCING STEEL				
DESIGN H	6′	8′		10′
Ret WALL No.	3	1 & 2	3	1 & 2
W	8′-3"	8′-3"	11′-0"	10′-0"
C	7′-0"	7′-0"	9′-9"	8′-9"
B	1′-3"	1′-3"	1′-3"	1′-3"
© BARS	#6 @ 9"	#6 @ 9"	#6 @ 6"	#6 @ 6"

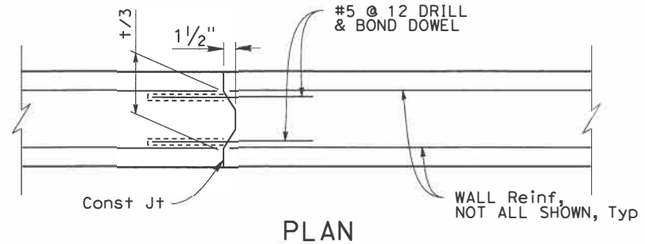

PLAN
CONSTRUCTION JOINT DETAIL
NO SCALE

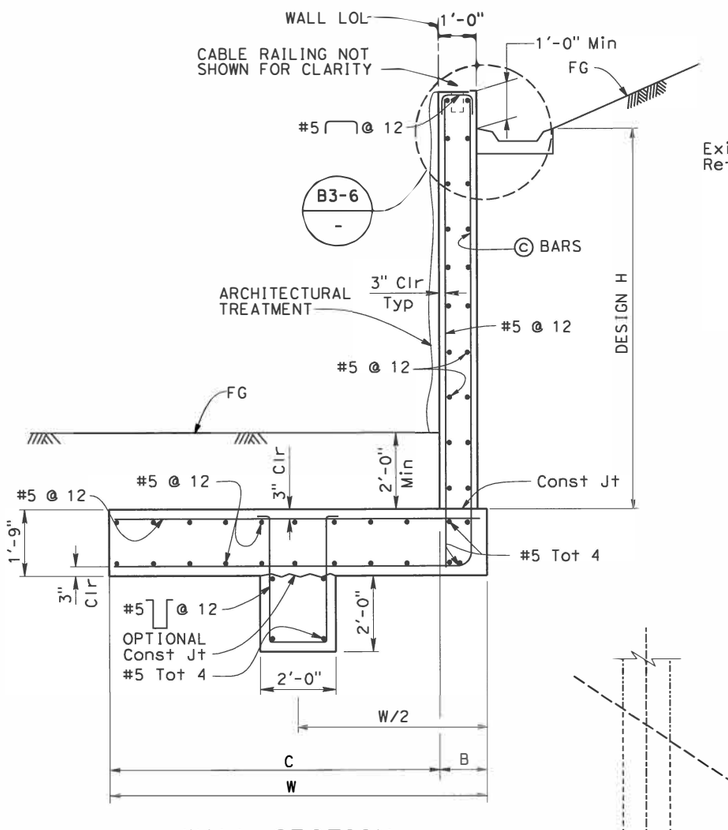

WALL SECTION
NO SCALE

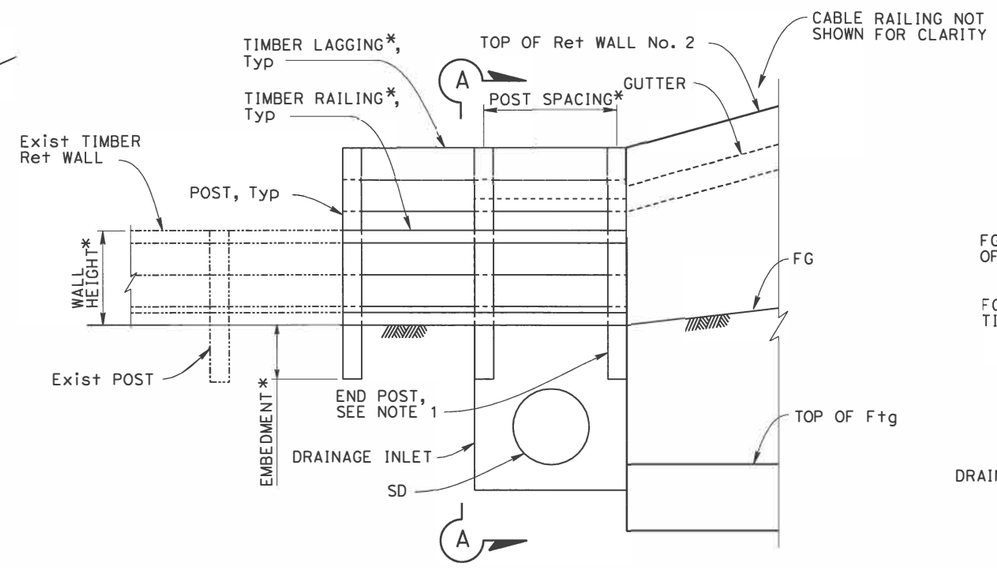

TIMBER WALL DETAIL - ELEVATION
½" = 1′-0"

* MATCH EXISTING EMBEDMENT, POST GEOMETRY AND LAGGING GEOMETRY. USE DOUGLAS FIR #1 FOR POSTS AND LAGGING.

LEGEND:

DENOTES EXISTING STRUCTURE

DENOTES NEW STRUCTURE

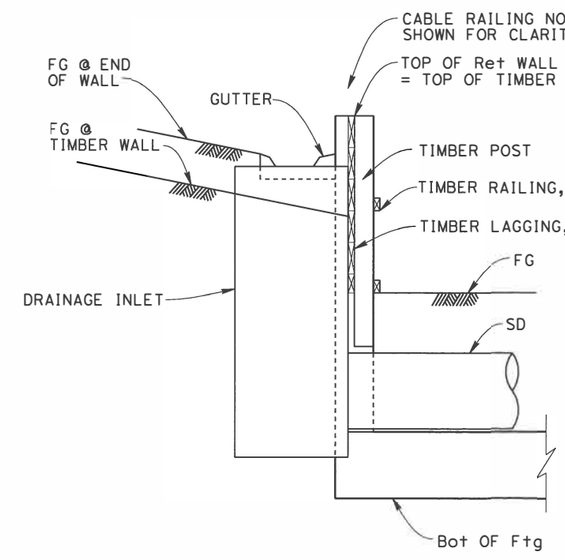

SECTION A-A
½" = 1′-0"

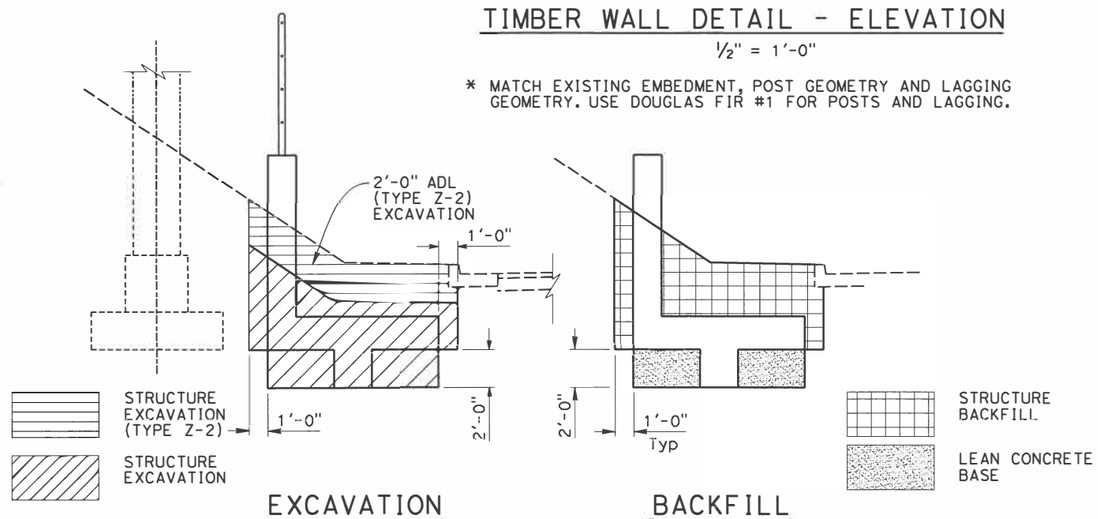

EXCAVATION
NO SCALE

BACKFILL
NO SCALE

NOTES:

1. Place timber end post flush with end of Retaining Wall No. 2 and space posts to miss pipe.
2. For drainage information, see "DRAINAGE PLANS".
3. Controlling field conditions to be verified prior to start of construction.

DESIGN OVERSIGHT
7/14/16
SIGN OFF DATE

	BY	CHECKED
DESIGN	G. Iwamoto	G. Yu
DETAILS	H. Li	G. Yu
QUANTITIES	G. Iwamoto	G. Yu

PREPARED FOR THE STATE OF CALIFORNIA DEPARTMENT OF TRANSPORTATION

Erik Okada
PROJECT ENGINEER

BRIDGE NO. VARIES
POST MILES 5.0/7.8, 0.0/3.3

RETAINING WALL DETAILS

DESIGN DETAIL SHEET (ENGLISH) (REV. 03/14/12)

ORIGINAL SCALE IN INCHES FOR REDUCED PLANS 0 1 2 3

UNIT: 0000
PROJECT NUMBER & PHASE: 04140005521
CONTRACT NO.: 04-2J6804

DISREGARD PRINTS BEARING EARLIER REVISION DATES

REVISION DATES

SHEET 30 OF 33

FILE => 030-28-0100-a-rwdt30.dgn

USERNAME => $USER$ DATE PLOTTED => $DATE$ TIME PLOTTED => $TIME$

DIST	COUNTY	ROUTE	POST MILES TOTAL PROJECT	SHEET No	TOTAL SHEETS
04	CC/Mrn	580	5.0/7.8, 0.0/3.3	537	579

REGISTERED CIVIL ENGINEER 7/14/16 DATE

7/26/16
PLANS APPROVAL DATE

REGISTERED PROFESSIONAL ENGINEER E. OKADA No. S4415 Exp. 6-30-18 STRUCTURAL STATE OF CALIFORNIA

The State of California or its officers or agents shall not be responsible for the accuracy or completeness of scanned copies of this plan sheet.

HNTB CORPORATION
1111 BROADWAY
9TH FLOOR
OAKLAND, CA 94607

BAY AREA TOLL AUTHORITY
375 BEALE STREET, SUITE 800
SAN FRANCISCO, CA 94105

NOTES:

1. Geocomposite drain per Section 88 Geosynthetics of the Standard Specifications
2. Geocomposite drain and 3" ø slotted plastic pipe continuous behind retaining wall. Cap ends of pipe. Provide "Tee" connection at each 4" ø drain.
3. Connect the low end of plastic pipe to the main outlet pipe as applicable.

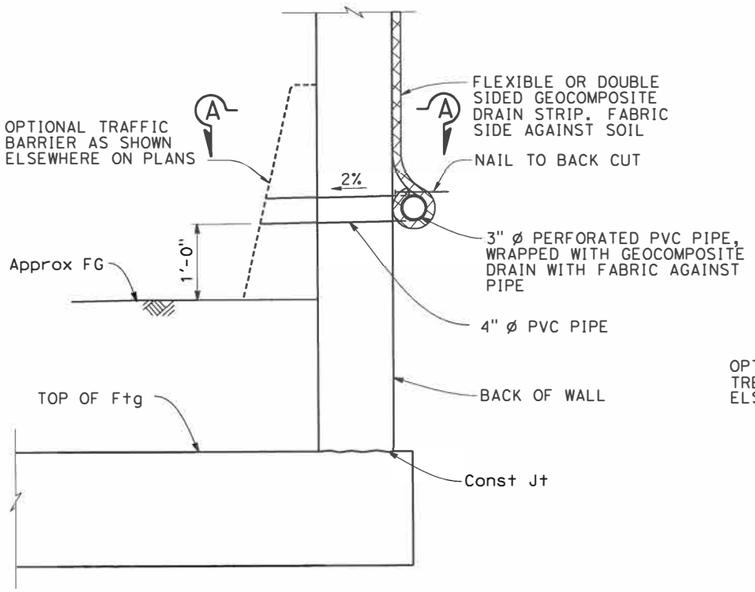

WALL DRAIN DETAIL AT WEEPHOLE OPTION A

NO SCALE

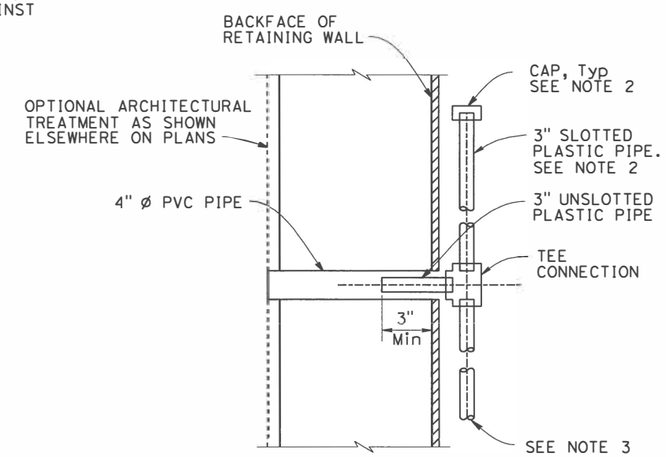

SECTION A-A

NO SCALE

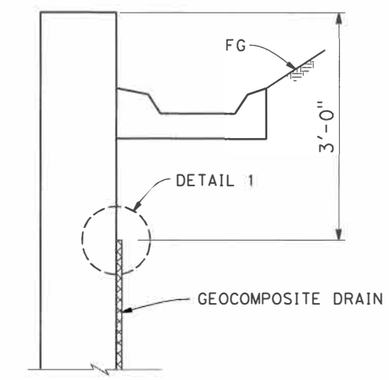

GEOCOMPOSITE DRAIN

NO SCALE

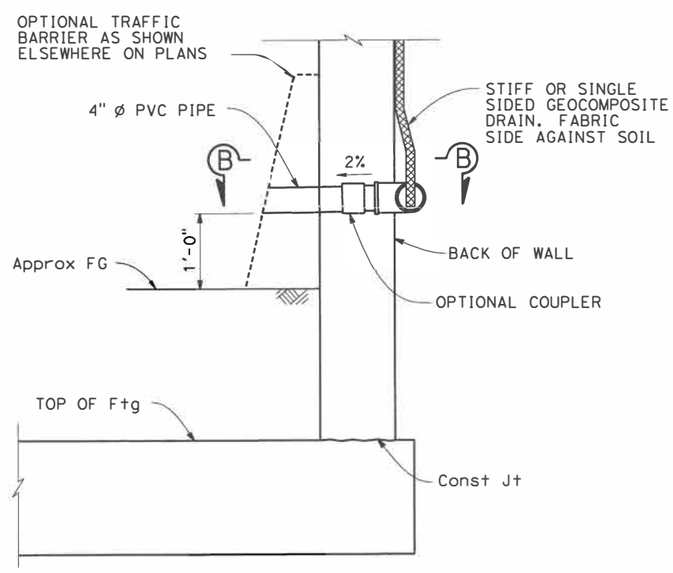

WALL DRAIN DETAIL AT WEEPHOLE OPTION B

NO SCALE

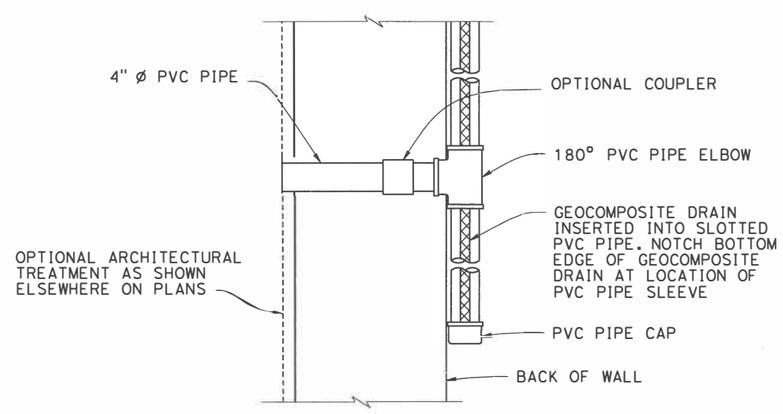

SECTION B-B

NO SCALE

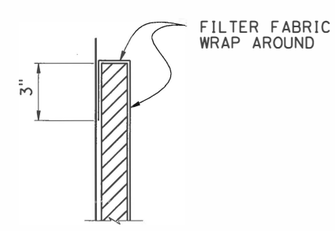

DETAIL 1

NO SCALE

DESIGN OVERSIGHT
7/14/16
SIGN OFF DATE

	BY	CHECKED
DESIGN	G. Iwamoto	G. Yu
DETAILS	H. Li	G. Yu
QUANTITIES	G. Iwamoto	G. Yu

PREPARED FOR THE STATE OF CALIFORNIA DEPARTMENT OF TRANSPORTATION

Erik Okada
PROJECT ENGINEER

BRIDGE NO. VARIES
POST MILES 5.0/7.8, 0.0/3.3

RETAINING WALL DRAIN DETAILS NO. 1

DESIGN DETAIL SHEET (ENGLISH) (REV. 03/14/12)

ORIGINAL SCALE IN INCHES FOR REDUCED PLANS 0 1 2 3

UNIT: 0000
PROJECT NUMBER & PHASE: 04140005521
CONTRACT NO.: 04-2J6804

DISREGARD PRINTS BEARING EARLIER REVISION DATES

REVISION DATES

SHEET 31 OF 33

FILE => 031-28-0100-g-rwdt31.dgn

USERNAME => hu111 DATE PLOTTED => 7/14/2016 TIME PLOTTED => 10:26:34 AM

DIST	COUNTY	ROUTE	POST MILES TOTAL PROJECT	SHEET No	TOTAL SHEETS
04	CC/Mrn	580	5.0/7.8, 0.0/3.3	538	579

REGISTERED CIVIL ENGINEER 7/14/16 DATE

7/26/16
PLANS APPROVAL DATE

REGISTERED PROFESSIONAL ENGINEER E. OKADA No. S4415 Exp. 6-30-18 STRUCTURAL STATE OF CALIFORNIA

The State of California or its officers or agents shall not be responsible for the accuracy or completeness of scanned copies of this plan sheet.

HNTB CORPORATION
1111 BROADWAY
9TH FLOOR
OAKLAND, CA 94607

BAY AREA TOLL AUTHORITY
375 BEALE STREET, SUITE 800
SAN FRANCISCO, CA 94105

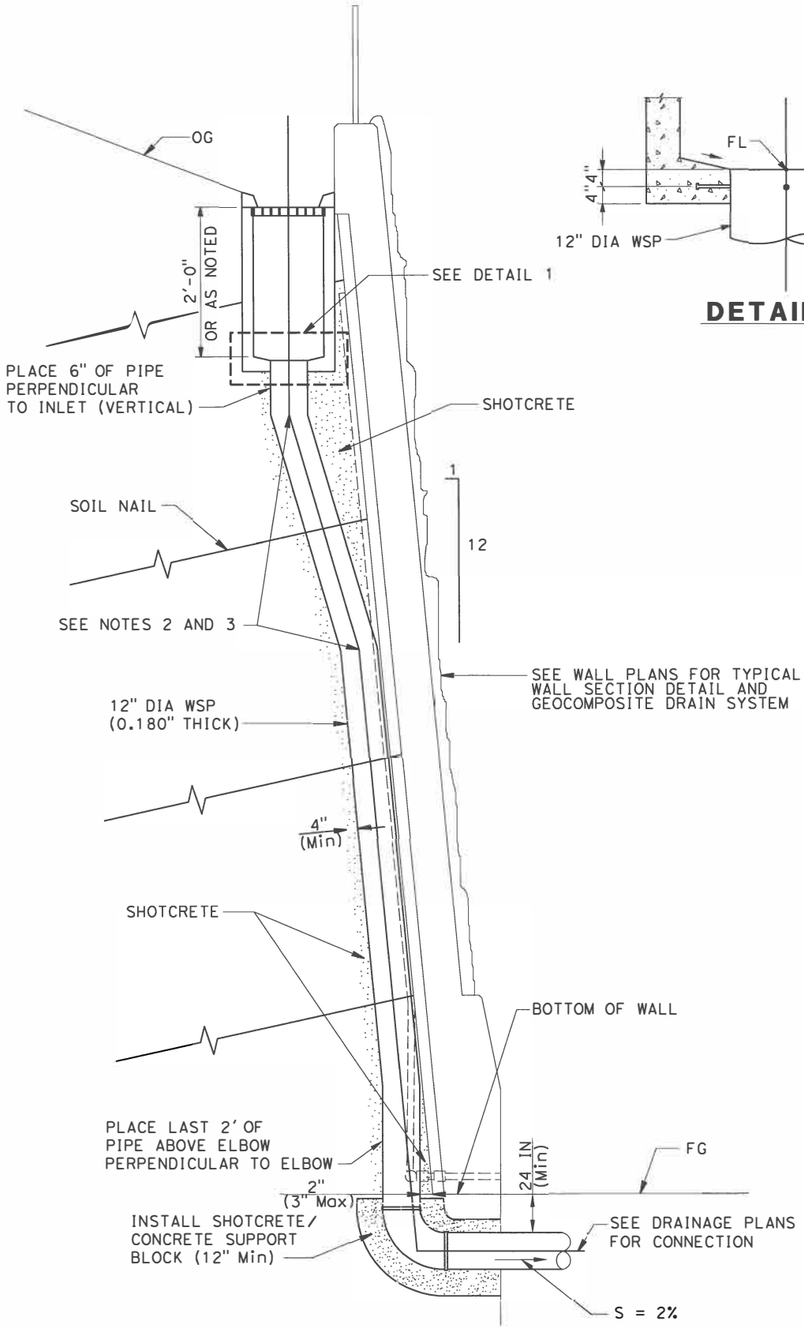

SOIL NAIL WALL INLET AND DOWN DRAIN

NO SCALE

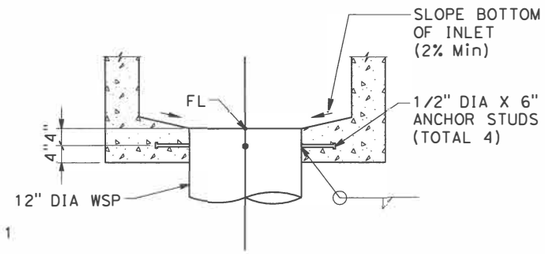

DETAIL 1

NOTES:

1. DRAINAGE INLETS AND PIPES SHALL BE CENTERED VERTICALLY BETWEEN SOIL NAIL OR TIEBACK ASSEMBLIES, AS SHOWN IN THE RETAINING WALL STRUCTURAL PLANS.
2. ADJUST PIPE CURVATURE AS NECESSARY TO MEET FIELD CONDITIONS AND MINIMIZE EXCAVATION FOR DOWN DRAIN PIPE.
3. ALL JOINTS TO BE BUTT WELDED.
4. FOR INLET TYPES AND ELEVATIONS, SEE DRAINAGE PLANS.

DESIGN OVERSIGHT
7/14/16
SIGN OFF DATE

	BY	CHECKED
DESIGN	M. Vargas	G. Iwamoto
DETAILS	H. Li	G. Iwamoto
QUANTITIES	E. Okada	G. Iwamoto

PREPARED FOR THE STATE OF CALIFORNIA DEPARTMENT OF TRANSPORTATION

Erik Okada
PROJECT ENGINEER

BRIDGE NO. NONE
POST MILES -

RETAINING WALL DRAIN DETAILS NO. 2

DESIGN DETAIL SHEET (ENGLISH) (REV. 03/14/12)

ORIGINAL SCALE IN INCHES FOR REDUCED PLANS 0 1 2 3

UNIT: 0000
PROJECT NUMBER & PHASE: 04140005521 CONTRACT NO.: 04-2J6804

DISREGARD PRINTS BEARING EARLIER REVISION DATES

REVISION DATES

SHEET 32 OF 33

FILE => 032-28-0100-a-rwdt32.dgn

USERNAME => hujii DATE PLOTTED => 7/14/2016 TIME PLOTTED => 10:26:35 AM

DIST	COUNTY	ROUTE	POST MILES TOTAL PROJECT	SHEET No	TOTAL SHEETS
04	CC/Mrn	580	5.0/7.8, 0.0/3.3	539	579

REGISTERED CIVIL ENGINEER — DATE 7/14/16

7/26/16
PLANS APPROVAL DATE

REGISTERED PROFESSIONAL ENGINEER — E. OKADA — No. S4415 — Exp. 6-30-18 — STRUCTURAL — STATE OF CALIFORNIA

The State of California or its officers or agents shall not be responsible for the accuracy or completeness of scanned copies of this plan sheet.

HNTB CORPORATION
1111 BROADWAY
9TH FLOOR
OAKLAND, CA 94607

BAY AREA TOLL AUTHORITY
375 BEALE STREET, SUITE 800
SAN FRANCISCO, CA 94105

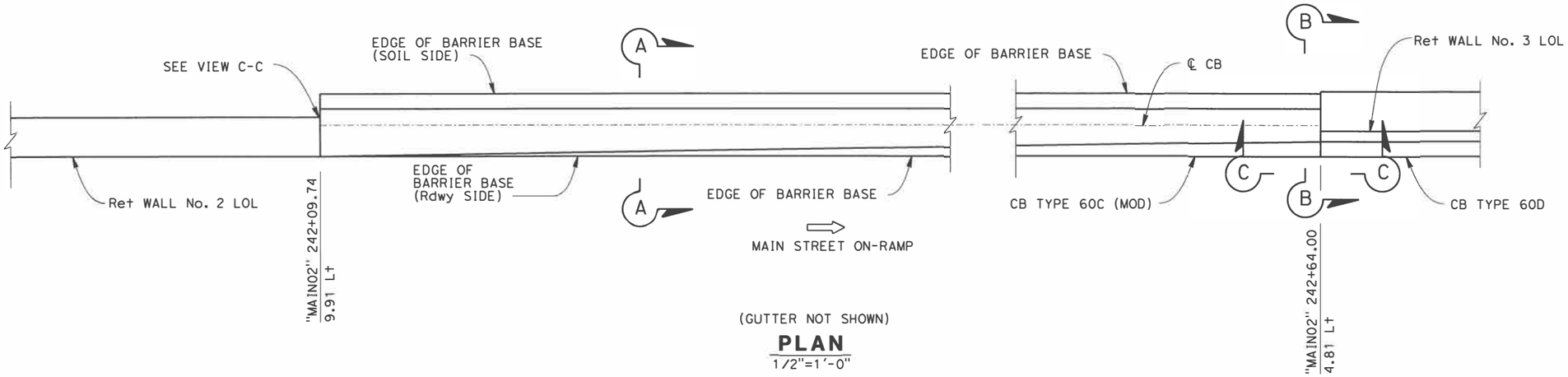

(GUTTER NOT SHOWN)

PLAN
1/2"=1'-0"

LEGEND:

⇨ INDICATES DIRECTION OF TRAFFIC

NOTES:

1. Top of concrete barrier elevation varies linearly between top of Retaining Wall No. 2 and top of Retaining Wall No. 3.
2. Embedded portion of barrier below construction joint shall be constructed as trench footing prior to construction of upper portion of barrier.
3. Controlling field dimensions to be verified prior to start of construction.
4. Conform to front face of concrete barrier type 60D on Retaining Wall No. 3.

CONCRETE BARRIER TYPE 60C (MOD) QUANTITIES

CONCRETE BARRIER (TYPE 60C) (MOD)	54	LF
MINOR CONCRETE (GUTTER)	54	LF

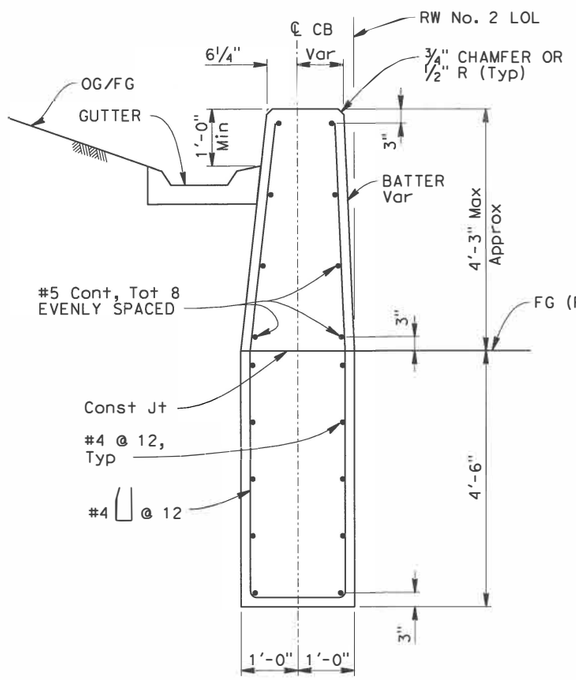

SECTION A-A
¾"=1'-0"

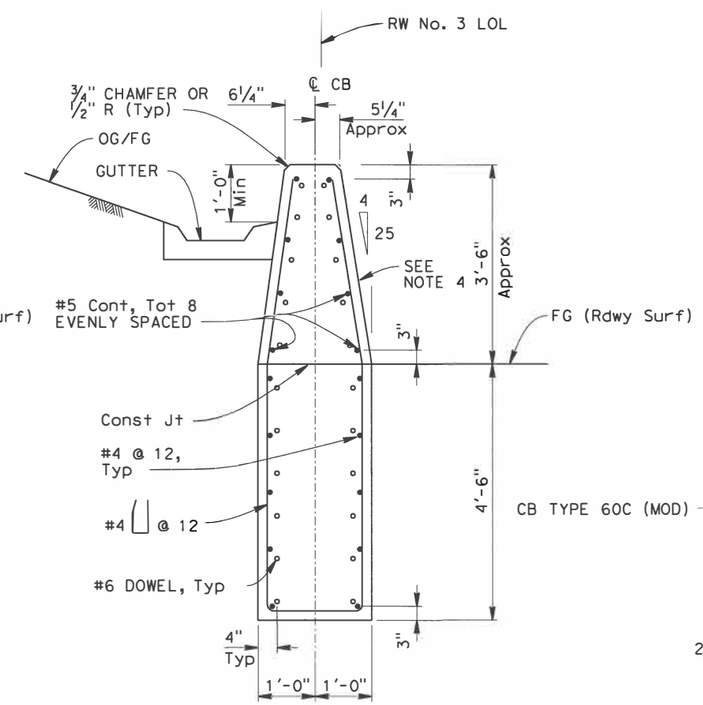

AT END OF CB TRANSITION

SECTION B-B
¾"=1'-0"

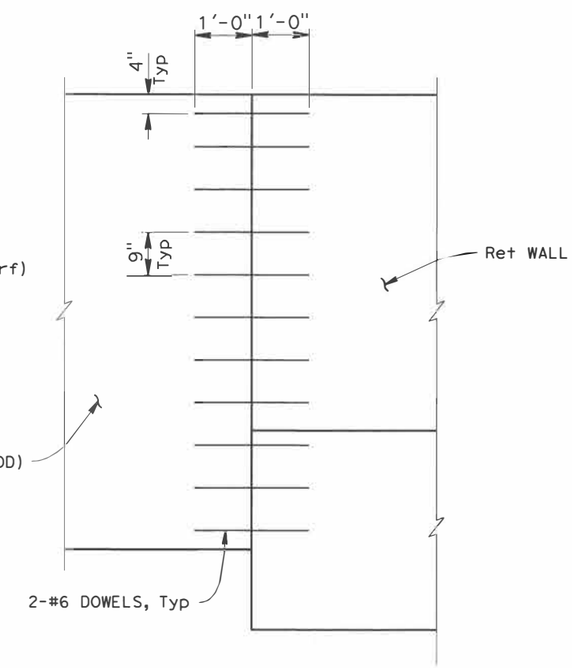

VIEW C-C
¾"=1'-0"

DESIGN OVERSIGHT
7/14/16
SIGN OFF DATE

	BY	CHECKED
DESIGN	G. Iwamoto	E. Okada
DETAILS	H. Li	E. Okada
QUANTITIES	G. Iwamoto	E. Okada

PREPARED FOR THE STATE OF CALIFORNIA DEPARTMENT OF TRANSPORTATION

Erik Okada
PROJECT ENGINEER

BRIDGE NO. VARIES
POST MILES 5.92

RETAINING WALL
CONCRETE BARRIER TYPE 60C (MOD)

DESIGN DETAIL SHEET (ENGLISH) (REV. 03/14/12)

ORIGINAL SCALE IN INCHES FOR REDUCED PLANS 0 1 2 3

UNIT: 0000
PROJECT NUMBER & PHASE: 04140005521
CONTRACT NO.: 04-2J6804

DISREGARD PRINTS BEARING EARLIER REVISION DATES

REVISION DATES

SHEET 33 OF 33

FILE => 033-28-0100-a-rwdt33.dgn

USERNAME => mulli DATE PLOTTED => 7/14/2016 TIME PLOTTED => 10:26:36 AM

DIST	COUNTY	ROUTE	POST MILES TOTAL PROJECT	SHEET No	TOTAL SHEETS
04	CC/Mrn	580	5.0/7.8, 0.0/3.3	540	579

REGISTERED CIVIL ENGINEER 7/14/16 DATE

7/26/16
PLANS APPROVAL DATE

REGISTERED PROFESSIONAL ENGINEER E. OKADA No. S4415 Exp. 6-30-18 STRUCTURAL STATE OF CALIFORNIA

The State of California or its officers or agents shall not be responsible for the accuracy or completeness of scanned copies of this plan sheet.

HNTB CORPORATION
1111 BROADWAY
9TH FLOOR
OAKLAND, CA 94607

BAY AREA TOLL AUTHORITY
375 BEALE STREET, SUITE 800
SAN FRANCISCO, CA 94105

SCOFIELD UC QUANTITIES

STRUCTURAL CONCRETE, BRIDGE	22	CY
BAR REINFORCING STEEL	3824	LBS
DRILL AND BOND (DOWEL BAR)	1607	EA
PROTECTION SYSTEM	1	LUMP SUM
PREPARE BRIDGE DECK SURFACE	5000	SQ FT
PLACE POLYESTER CONCRETE OVERLAY	5000	SQ FT
REMOVE CONCRETE BARRIER	677	LF
REMOVE CHAIN LINK FENCE	677	LF

SCOFIELD UC QUANTITIES (CONTINUED)

CONCRETE BARRIER TYPE 732 (MOD)	707 LF
CHAIN LINK RAILING (TYPE CL-8 MOD 2)	677 LF
FURNISH POLYESTER CONCRETE OVERLAY	409 CF
BICYCLE RAILING	707 LF
MISCELLANEOUS METAL (BRIDGE)	2297 LBS

NOTES:

1. All ℄ bent bearings are S16°00'00"E.

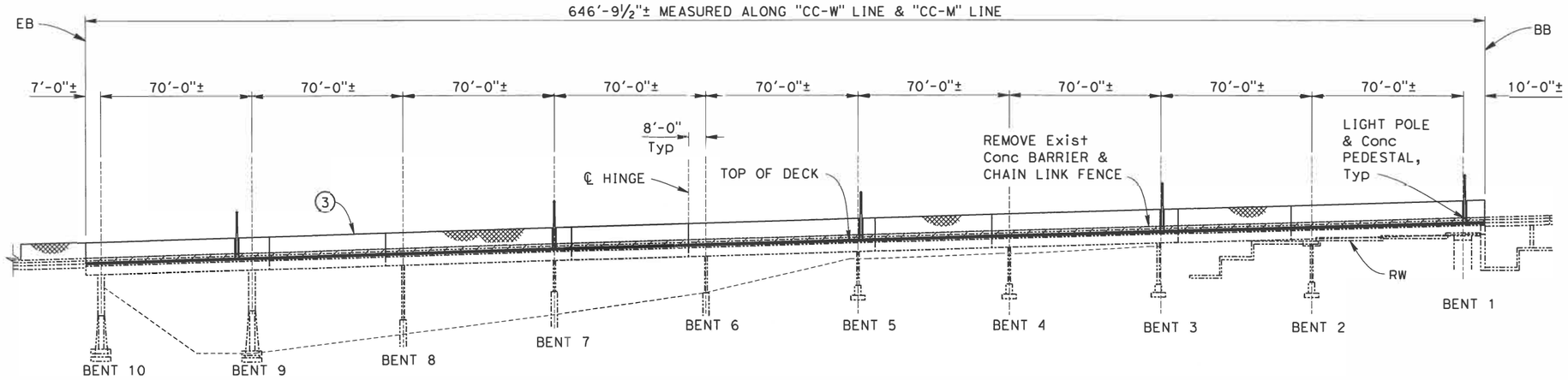

DATUM Elev = -10.00

LEGEND:

- INDICATES DIRECTION OF TRAFFIC
- NEW CONCRETE BARRIER
- TEMPORARY BARRIER (TYPE K)
- EXISTING STRUCTURE
- NEW CONSTRUCTION
- REMOVE CONCRETE BARRIER/CHAIN LINK FENCE
- BRIDGE LIGHT POLE
- POLYESTER CONCRETE OVERLAY

WB BRIDGE DEVELOPED ELEVATION

1"=30'-0"

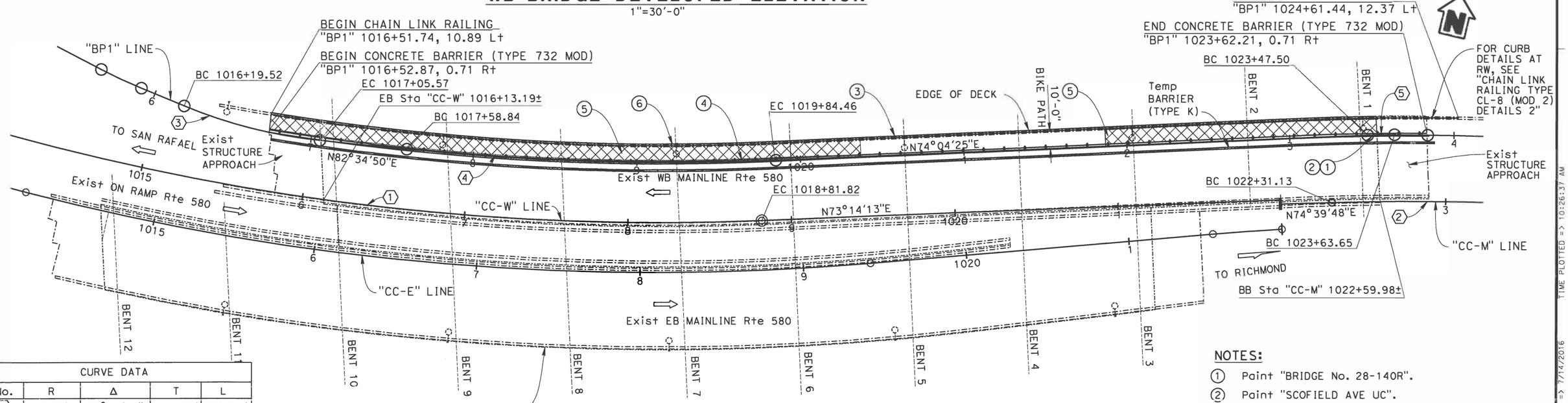

PLAN

1"=30'-0"

CURVE DATA

No.	R	Δ	T	L
1	1500'	28°53'13"	386.35'	756.26'
2	1615'	39°59'35"	587.70'	1127.29'
3	299'	16°29'25"	43.27'	86.06'
4	1523'	8°29'17"	113.02'	225.62'
5	301'	3°04'33"	8.08'	16.16'

NOTES:

1. Paint "BRIDGE No. 28-140R".
2. Paint "SCOFIELD AVE UC".
3. CONSTRUCT CHAIN LINK RAILING
4. CONSTRUCT CONCRETE BARRIER (TYPE 732 MODIFIED)
5. CONSTRUCT POLYESTER CONCRETE OVERLAY
6. REMOVE CONCRETE BARRIER AND CHAIN LINK FENCE

DESIGN OVERSIGHT 7/14/16 SIGN OFF DATE

	BY	CHECKED
DESIGN	G. Iwamoto	E. Okada
DETAILS	H. Li	G. Iwamoto
QUANTITIES	E. Okada	G. Yu

LOAD & RESISTANCE FACTOR DESIGN — LIVE LOADING: HL-93 W/"LOWBOY"; PERMIT DE SIGN VEHICLE

LAYOUT BY H. Li CHECKED G. Iwa moto

SPECIFICATIONS BY D. Desai PLANS AND SPECS COMPARED D. D esai

PREPARED FOR THE STATE OF CALIFORNIA DEPARTMENT OF TRANSPORTATION

Erik Okada
PROJECT ENGINEER

BRIDGE NO. 28-140R
POST MILES 5.80

SCOFIELD AVENUE UNDERCROSSING (MODIFY)

GENERAL PLAN No. 1

DESIGN GENERAL PLAN SHEET (ENGLISH) (REV. 06-01-09)

ORIGINAL SCALE IN INCHES FOR REDUCED PLANS 0 1 2 3

UNIT: 0000
PROJECT NUMBER & PHASE: 04140005521

DISREGARD PRINTS BEARING EARLIER REVISION DATES

REVISION DATES (PRELIMINARY STAGE ONLY)

SHEET 1 OF 12

FILE => 050-28-0140-a-gp01.dgn

USERNAME => PLUIII DATE PLOTTED => 7/14/2016 TIME PLOTTED => 10:26:37 AM

DIST	COUNTY	ROUTE	POST MILES TOTAL PROJECT	SHEET No	TOTAL SHEETS
04	CC/Mrn	580	5.0/7.8, 0.0/3.3	541	579

REGISTERED CIVIL ENGINEER 7/14/16 DATE

7/26/16
PLANS APPROVAL DATE

REGISTERED PROFESSIONAL ENGINEER E. OKADA No. S4415 Exp. 6-30-18 STRUCTURAL STATE OF CALIFORNIA

The State of California or its officers or agents shall not be responsible for the accuracy or completeness of scanned copies of this plan sheet.

HNTB CORPORATION
1111 BROADWAY
9TH FLOOR
OAKLAND, CA 94607

BAY AREA TOLL AUTHORITY
375 BEALE STREET, SUITE 800
SAN FRANCISCO, CA 94105

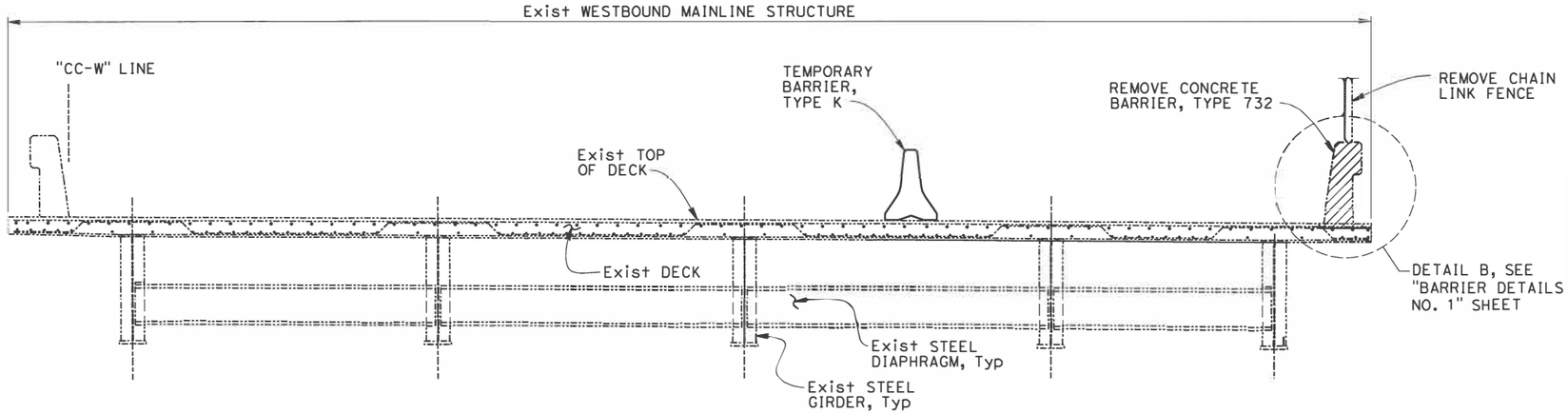

EXISTING TYPICAL SECTION

3/8"=1'-0"

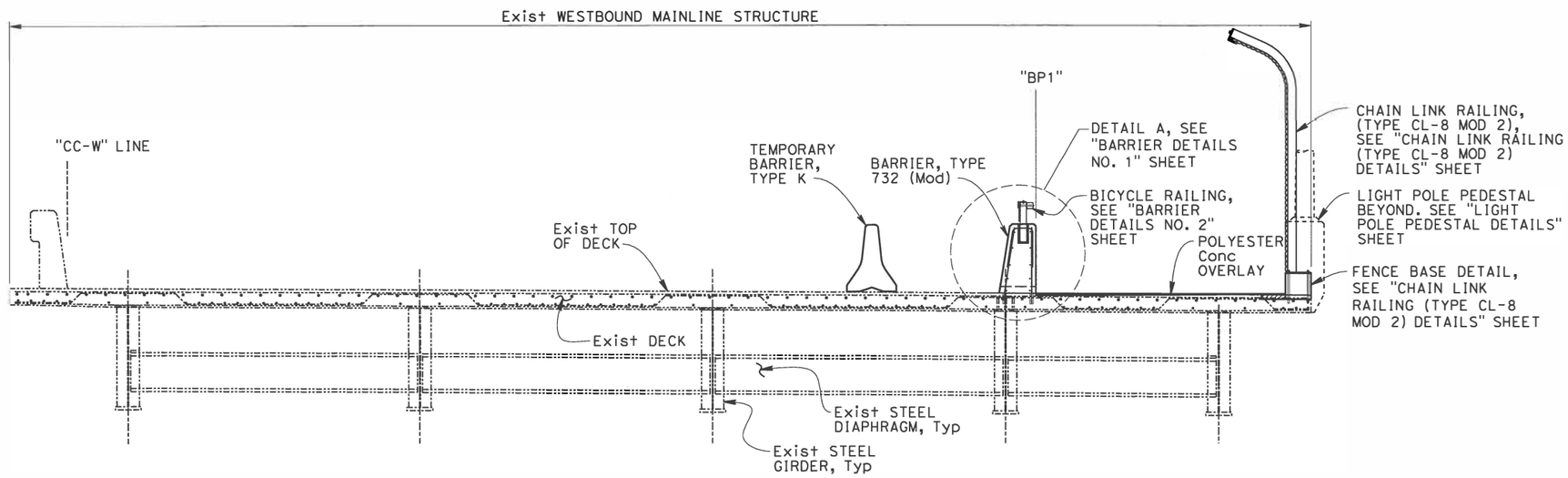

PROPOSED TYPICAL SECTION

3/8"=1'-0"

NOTES:

1. For Roadway elevations see "ROADWAY PLANS".
2. For Utility information see "UTILITY PLANS".
3. For Drainage information see "DRAINAGE PLANS".
4. For Layout of Temporary Barriers see "STAGE CONSTRUCTION & TRAFFIC HANDLING PLANS".
5. The Contractor shall verify all controlling dimensions before ordering or fabricating any material.
6. For Plan & Elevation see "GENERAL PLAN NO. 1" sheet.
7. Existing Chevron Oil Refinery and other facilities not shown.
8. Conduits and Light Standards not shown.
9. Substructure not shown.
10. Sections drawn parallel to ℄ of Bents.
11. See "PAVEMENT ELEVATIONS" for Polyester Concrete overlay finish elevation.
12. Location and Alignment of Existing Edge of Deck = Location and Alignment of New Edge of Deck.
13. Contractor shall Design, Detail and Install a Temporary Protection System as approved by the Engineer and Chevron Oil Company.

DESIGN OVERSIGHT
7/14/16
SIGN OFF DATE

	BY	CHECKED
DESIGN	G. Iwamoto	E. Okada
DETAILS	H. Paige	M. Vargas
QUANTITIES	E. Okada	G. Yu

PREPARED FOR THE STATE OF CALIFORNIA DEPARTMENT OF TRANSPORTATION

Erik Okada
PROJECT ENGINEER

BRIDGE NO. 28-140R
POST MILES 5.80

SCOFIELD AVENUE UNDERCROSSING
GENERAL PLAN NO. 2

DESIGN DETAIL SHEET (ENGLISH) (REV. 03/14/12)

ORIGINAL SCALE IN INCHES FOR REDUCED PLANS 0 1 2 3

UNIT: 0000
PROJECT NUMBER & PHASE: 04140005521
CONTRACT NO.: 04-2J6804

DISREGARD PRINTS BEARING EARLIER REVISION DATES

REVISION DATES

SHEET 2 OF 12

FILE => 051-28-0140-a-gp02.dgn

USERNAME => hu111 DATE PLOTTED => 7/14/2016 TIME PLOTTED => 10:26:38 AM

DIST	COUNTY	ROUTE	POST MILES TOTAL PROJECT	SHEET No.	TOTAL SHEETS
04	CC/Mrn	580	5.0/7.8, 0.0/3.3	542 427	579 556

REGISTERED CIVIL ENGINEER — DATE 7/14/16

7/26/16
PLANS APPROVAL DATE

REGISTERED PROFESSIONAL ENGINEER — E. OKADA — No. S4415 — Exp. 6-30-18 — STRUCTURAL — STATE OF CALIFORNIA

The State of California or its officers or agents shall not be responsible for the accuracy or completeness of scanned copies of this plan sheet.

HNTB CORPORATION
1111 BROADWAY
9TH FLOOR
OAKLAND, CA 94607

BAY AREA TOLL AUTHORITY
375 BEALE STREET, SUITE 800
SAN FRANCISCO, CA 94105

INDEX OF DRAWINGS

SHEET No.	DESCRIPTION
1	GENERAL PLAN NO. 1
2	GENERAL PLAN NO. 2
3	INDEX AND GENERAL NOTES
4	PAVEMENT ELEVATIONS
5	PAVING DETAILS
6	JOINT ARMOR FOR PEDESTRIAN WALKWAYS
7	BARRIER DETAILS NO. 1
8	BARRIER DETAILS NO. 2
9	BARRIER DETAILS NO. 3
10	CHAIN LINK RAILING (TYPE CL-8 MOD 2) DETAILS NO. 1
11	CHAIN LINK RAILING (TYPE CL-8 MOD 2) DETAILS NO. 2
12	LIGHT POLE PEDESTAL DETAILS

CALTRANS STANDARD PLANS DATED 2010

	A10A	ABBREVIATIONS (SHEETS 1 OF 2)
RSP	A10B	ABBREVIATIONS (SHEETS 2 OF 2)
	A10C	LINES AND SYMBOLS (SHEETS 1 OF 3)
	A10D	LINES AND SYMBOLS (SHEETS 2 OF 3)
	A10E	LINES AND SYMBOLS (SHEETS 3 OF 3)
	B11-51	TUBULAR HAND RAILING
RSP	B11-55	CONCRETE BARRIER TYPE 732
RSP	ES-6A	ELECTRICAL SYSTEMS (LIGHTING STANDARD, TYPE 15 AND 21)
	ES-6B	ELECTRICAL SYSTEMS (ELECTROLIER ANCHORAGE AND GROUTING FOR TYPE 15 TO 21, BARRIER RAIL MOUNTED)
	ES-9B	ELECTRICAL SYSTEMS (CONDUIT RISER AND EXPANSION FITTING, STRUCTURE INSTALLATIONS)
	T3A	TEMPORARY RAILING TYPE (K)

VERTICAL DATUM:

North American Vertical Datum of 1988 (NAVD 88)

GENERAL NOTES
LOAD AND RESISTANCE FACTOR DESIGN

DESIGN:	AASHTO LRFD Bridge Design Specifications, 6th Edition. And Caltrans Amendments. Preface Dated November 2014.
SEISMIC DESIGN:	Caltrans Seismic Design Criteria (SDC), Version 1.6 dated 2010
WIND LOAD:	Base Wind Velocity, V_b = 100 MPH Structure Height, Z > 30 FT
REINFORCED CONCRETE:	f'c = 4000 psi, Unless Noted Otherwise fy = 60 ksi

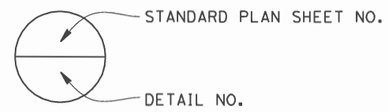

ABBREVIATIONS

SEE "STANDARD PLANS", "A10A", AND "A10B" FOR ADDITIONAL ABBREVIATIONS.

STRUCTURE STEEL

STEEL PLATES, SHAPES AND BARS:	ASTM A709
STRUCTURE TUBES:	ASTM A500, GRADE C

FASTENERS

BOLTS:	ASTM A307
ANCHOR BOLTS:	ASTM F1554
NUTS:	ASTM A563
WASHERS:	ASTM F844

WELDING

WELDING SHALL BE PER AWS D1.1

DESIGN OVERSIGHT
7/14/16
SIGN OFF DATE

	BY	CHECKED
DESIGN	G. Iwamoto	E. Okada
DETAILS	H. Li	E. Okada
QUANTITIES	G. Iwamoto	E. Okada

PREPARED FOR THE STATE OF CALIFORNIA DEPARTMENT OF TRANSPORTATION

Erik Okada
PROJECT ENGINEER

BRIDGE NO. 28-140R
POST MILES 5.80

SCOFIELD AVENUE UNDERCROSSING (MODIFY)
INDEX AND GENERAL NOTES

DESIGN DETAIL SHEET (ENGLISH) (REV. 03/14/12)

ORIGINAL SCALE IN INCHES FOR REDUCED PLANS 0 1 2 3

UNIT: 0000
PROJECT NUMBER & PHASE: 04140005521
CONTRACT NO.: 04-2J6804

DISREGARD PRINTS BEARING EARLIER REVISION DATES

REVISION DATES

SHEET 3 OF 12

FILE => 052-28-0140-b-gnote.dgn

USERNAME => hulii DATE PLOTTED => 7/14/2016 TIME PLOTTED => 10:26:38 AM

DIST	COUNTY	ROUTE	POST MILES TOTAL PROJECT	SHEET No	TOTAL SHEETS
04	CC/Mrn	580	5.0/7.8, 0.0/3.3	543	579

REGISTERED CIVIL ENGINEER 7/14/16 DATE

7/26/16
PLANS APPROVAL DATE

REGISTERED PROFESSIONAL ENGINEER E. OKADA No. S4415 Exp. 6-30-18 STRUCTURAL STATE OF CALIFORNIA

The State of California or its officers or agents shall not be responsible for the accuracy or completeness of scanned copies of this plan sheet.

HNTB CORPORATION
1111 BROADWAY
9TH FLOOR
OAKLAND, CA 94607

BAY AREA TOLL AUTHORITY
375 BEALE STREET, SUITE 800
SAN FRANCISCO, CA 94105

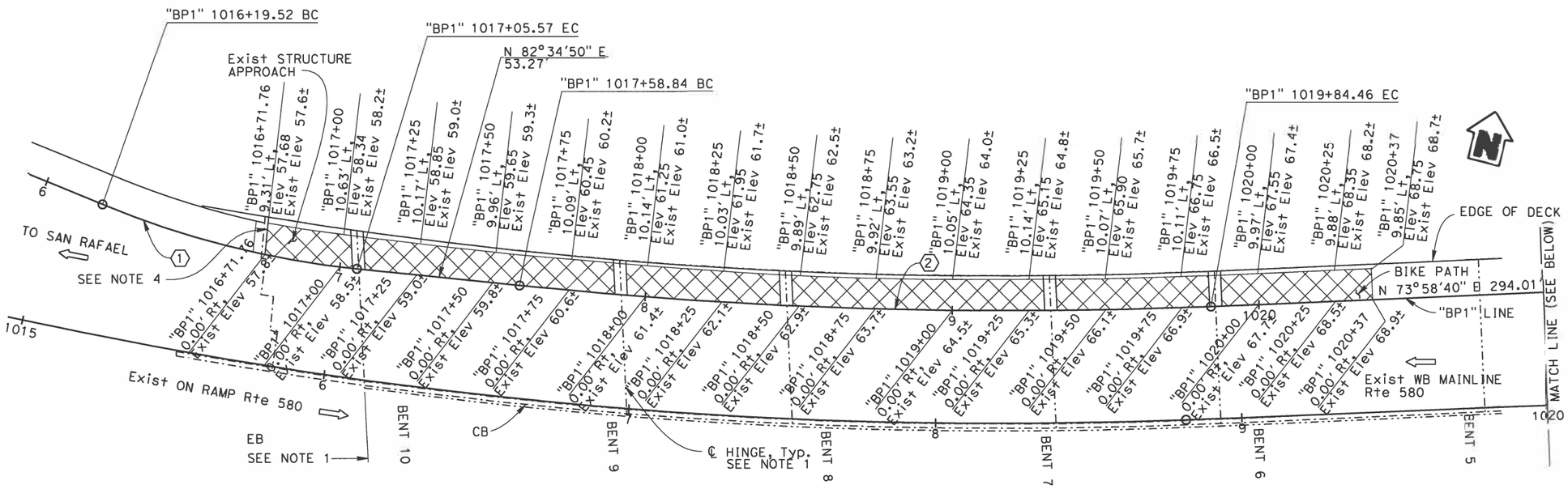

PARTIAL PLAN 1

1"=20'-0"

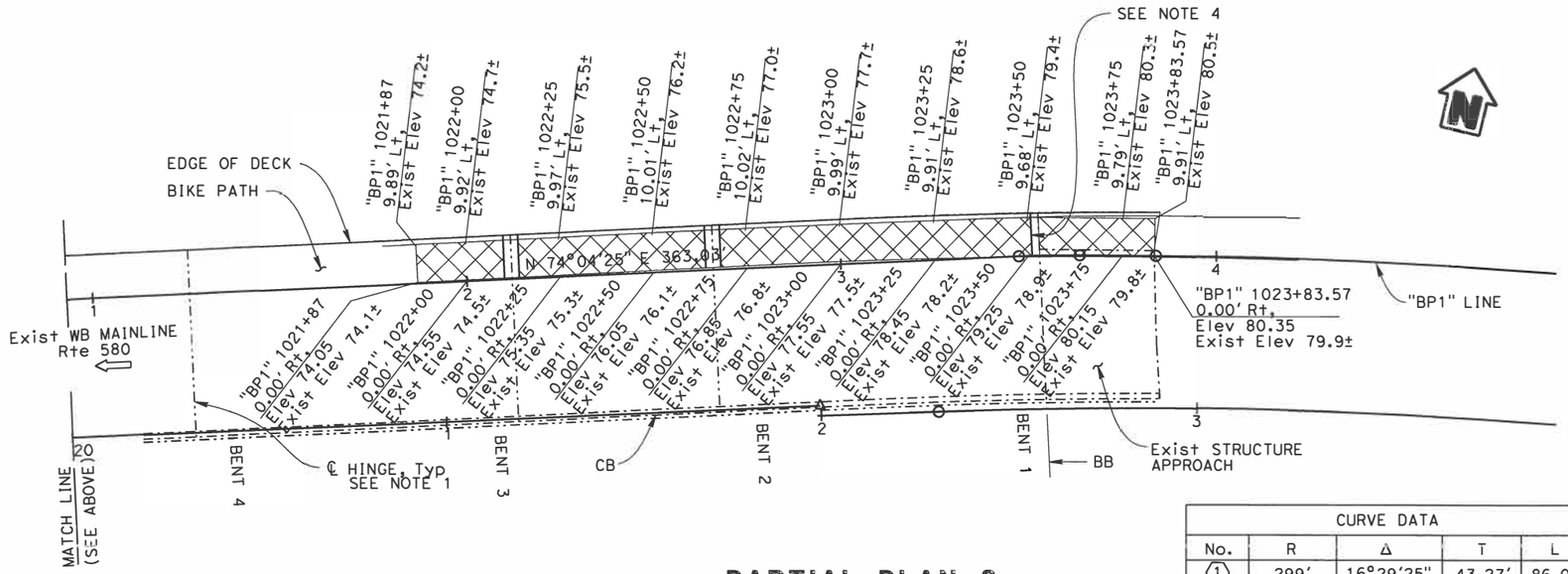

PARTIAL PLAN 2

1"=20'-0"

CURVE DATA				
No.	R	Δ	T	L
1	299'	16°29'25"	43.27'	86.06'
2	1523'	8°29'17"	113.02'	225.62'

LEGEND:

INDICATES POLYESTER CONCRETE OVERLAY

NOTES:

1. For deck joint and joint armor detail, see "DECK JOINT DETAIL" on "PAVING DETAILS" sheet.
2. For paving detail on "PARTIAL PLAN 1", see "PAVING DETAIL 1" on "PAVING DETAILS" sheet.
3. For paving detail on "PARTIAL PLAN 2", see "PAVING DETAIL 2" on "PAVING DETAILS" sheet.
4. For polyester concrete and asphalt concrete interface, see "APPROACH SLAB PAVING DETAIL" on "PAVING DETAILS" sheet
5. When polyester concrete ends, surface shall conform to existing deck or pavement.
6. For limits of paving, see "LAYOUT PLANS".
7. Pavement elevations that end in "±" shall match existing pavement elevation.

DESIGN OVERSIGHT
7/14/16
SIGN OFF DATE

	BY	CHECKED
DESIGN	G. Iwamoto	M. Vargas
DETAILS	H. L'i	M. Vargas
QUANTITIES	E. Okada	G. YYu

PREPARED FOR THE STATE OF CALIFORNIA DEPARTMENT OF TRANSPORTATION

Erik Okada
PROJECT ENGINEER

BRIDGE NO. 28-140R
POST MILES 5.80

SCOFIELD AVENUE UNDERCROSSING (MODIFY)
PAVEMENT ELEVATIONS

DESIGN DETAIL SHEET (ENGLISH) (REV. 03/14/12)

ORIGINAL SCALE IN INCHES FOR REDUCED PLANS 0 1 2 3

UNIT: 0000
PROJECT NUMBER & PHASE: 04140005521 CONTRACT NO.: 04-2J6804

DISREGARD PRINTS BEARING EARLIER REVISION DATES

REVISION DATES

SHEET 4 OF 12

FILE => 053-28-0140-d-dc.dgn

USERNAME => $USER$ DATE PLOTTED => $DATE$ TIME PLOTTED => $TIME$

DIST	COUNTY	ROUTE	POST MILES TOTAL PROJECT	SHEET No	TOTAL SHEETS
04	CC/Mrn	580	5.0/7.8, 0.0/3.3	544	579

REGISTERED CIVIL ENGINEER — DATE 7/14/16

PLANS APPROVAL DATE 7/26/16

REGISTERED PROFESSIONAL ENGINEER — E. OKADA — No. S4415 — Exp. 6-30-18 — STRUCTURAL — STATE OF CALIFORNIA

The State of California or its officers or agents shall not be responsible for the accuracy or completeness of scanned copies of this plan sheet.

HNTB CORPORATION
1111 BROADWAY
9TH FLOOR
OAKLAND, CA 94607

BAY AREA TOLL AUTHORITY
375 BEALE STREET, SUITE 800
SAN FRANCISCO, CA 94105

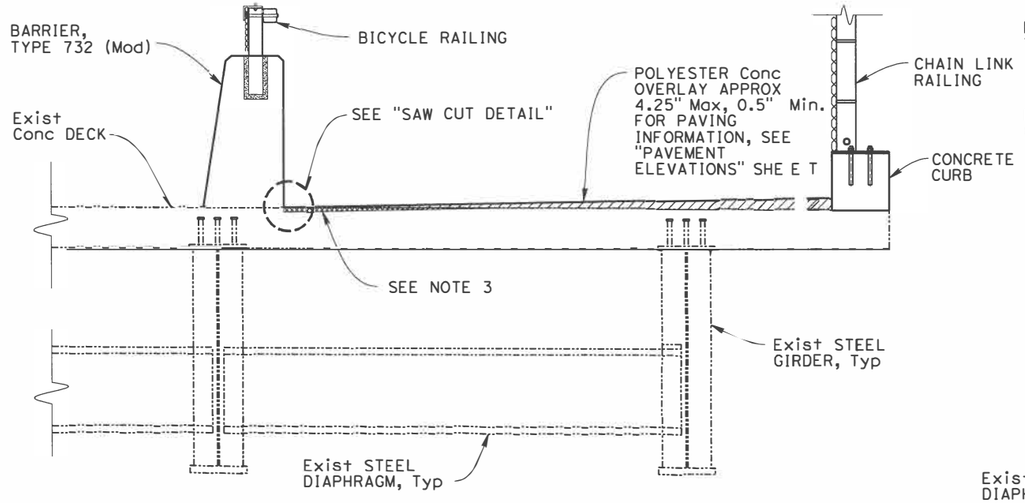

PAVING DETAIL 2

¾"=1'-0"

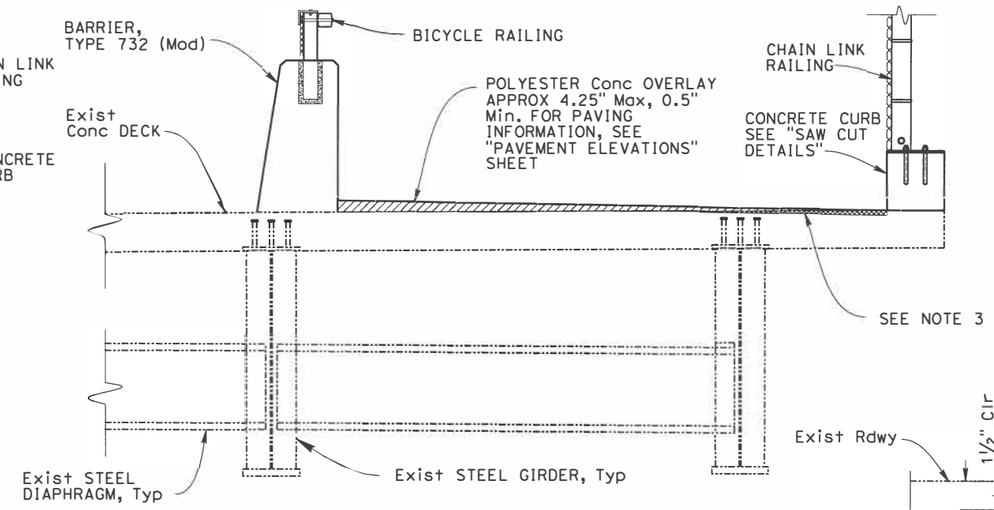

PAVING DETAIL 1

¾"=1'-0"

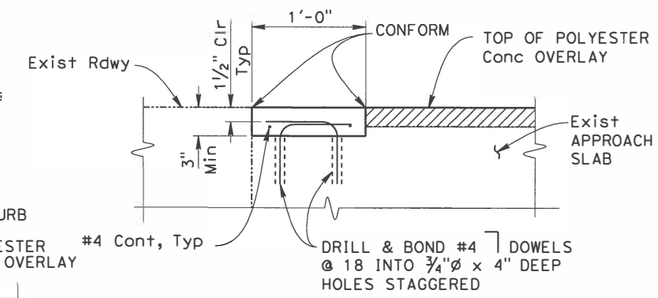

APPROACH SLAB PAVING DETAIL

NO SCALE

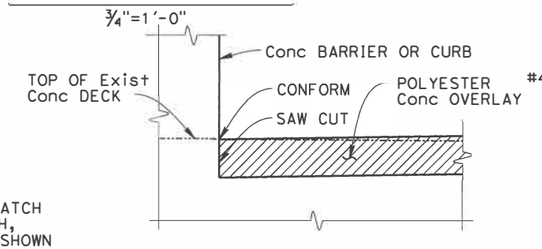

SAW CUT DETAIL

NO SCALE

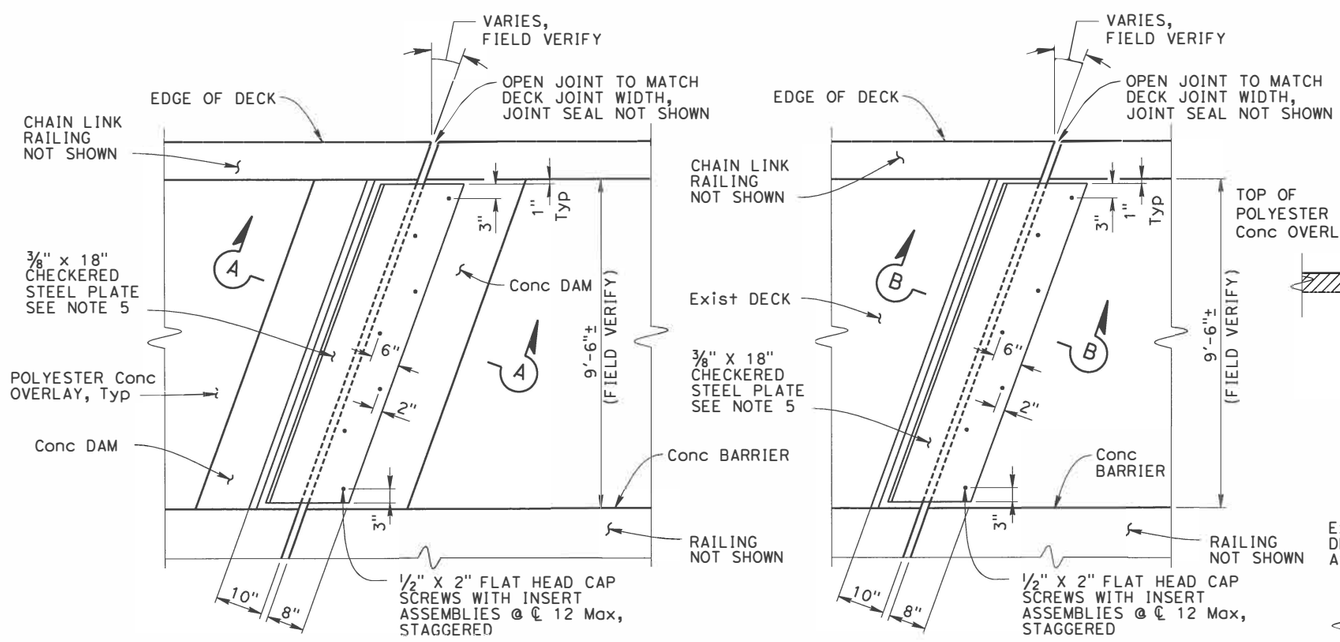

DECK JOINT DETAIL

NO SCALE

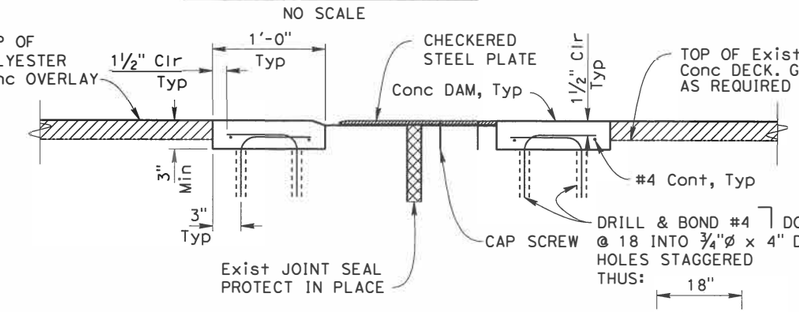

SECTION A-A

NO SCALE

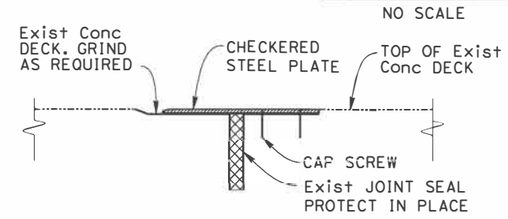

SECTION B-B

NO SCALE

NOTES:

1. For additional details, see "JOINT ARMOR FOR PEDESTRIAN WALKWAYS".
2. For roadway information, see "ROADWAY PLANS".
3. Grind existing top of deck as required to provide a minimum thickness per manufacturer's recommendation for polyester concrete overlay. Step or taper grinding depth to avoid damage to deck reinforcement.
4. The contractor shall verify all controlling field conditions before ordering or fabricating any material.
5. Non-skid surfaces shall be prepared in accordance with SSPC-SP 10 and shall be coated with a primer and non-skid top coat comprising a system that meets the requirements of MIL-PRF-24667V, Type V, International Paint Intershield 6GV or equivalent. The coating procedure shall follow the manufacturer's Application Guidelines for decks.

DESIGN OVERSIGHT
7/14/16
SIGN OFF DATE

	BY	CHECKED
DESIGN	G. Iwamoto	G. Yu
DETAILS	H. Li	G. Yu
QUANTITIES	E. Okada	G. Yu

PREPARED FOR THE STATE OF CALIFORNIA DEPARTMENT OF TRANSPORTATION

Erik Okada
PROJECT ENGINEER

BRIDGE NO. 28-140R
POST MILES 5.80

SCOFIELD AVENUE UNDERCROSSING (MODIFY)

PAVING DETAILS

DESIGN DETAIL SHEET (ENGLISH) (REV. 03/14/12)

ORIGINAL SCALE IN INCHES FOR REDUCED PLANS 0 1 2 3

UNIT: 0000
PROJECT NUMBER & PHASE: 04140005521
CONTRACT NO.: 04-2J6804

DISREGARD PRINTS BEARING EARLIER REVISION DATES

REVISION DATES

SHEET 5 OF 12

FILE => 054-28-0140-u-miscdt01.dgn

USERNAME => hulit DATE PLOTTED => 7/14/2016 TIME PLOTTED => 10:26:40 AM

DIST	COUNTY	ROUTE	POST MILES TOTAL PROJECT	SHEET No.	TOTAL SHEETS
04	CC/Mrn	580	5.0/7.8 0.0/3.3	545	579

REGISTERED CIVIL ENGINEER — DATE 7/14/16

PLANS APPROVAL DATE 7/26/16

REGISTERED PROFESSIONAL ENGINEER — E. OKADA — No. S4415 — Exp. 6-30-18 — STRUCTURAL — STATE OF CALIFORNIA

The State of California or its officers or agents shall not be responsible for the accuracy or completeness of scanned copies of this plan sheet.

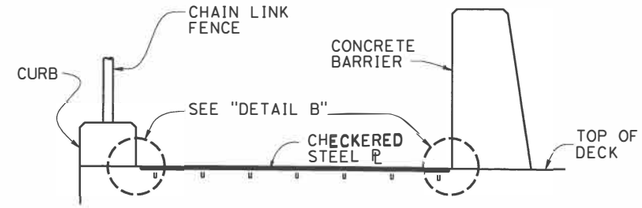

SECTION B-B

NO SCALE

NOTES:

1. Utility openings and expansion joints not shown for clarity.
2. Recess concrete ½" for plates.
3. Plates to be galvanized.
4. Architectural treatment not shown

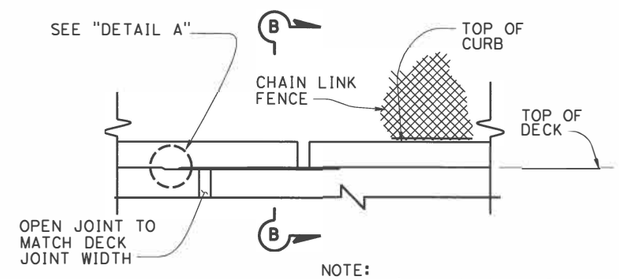

NOTE:
Barrier not shown for clarity

ELEVATION

NO SCALE

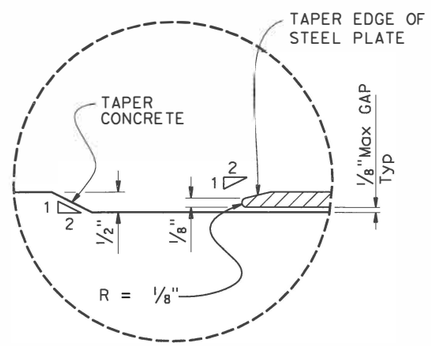

DETAIL A

NO SCALE

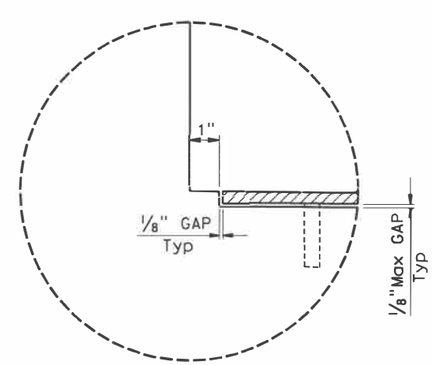

DETAIL B

NO SCALE

1 Delete Details.

SCOFIELD AVENUE UNDERCROSSING (MODIFY)

JOINT ARMOR FOR PEDESTRIAN WALKWAYS

STANDARD DRAWING — FILE NO. xs8-050 — APPROVAL DATE July 2014

STATE OF CALIFORNIA — DEPARTMENT OF TRANSPORTATION — DIVISION OF ENGINEERING SERVICES

BRIDGE NO. 28-140R — POST MILE 5.80

DS OSD 2147A (ENGLISH STANDARD DRAWING "XS" BORDER REV. (02-02-11)

ORIGINAL SCALE IN INCHES FOR REDUCED PLANS 0 1 2 3

UNIT: 0000
PROJECT NUMBER & PHASE: 04140005521 — CONTRACT NO.: 04-2J6804

DISREGARD PRINTS BEARING EARLIER REVISION DATES

REVISION DATES

SHEET 6 OF 12

FILE => 055-28-0140-u-miscdt02.dgn

USERNAME => hulit — DATE PLOTTED => 7/14/2016 — TIME PLOTTED => 10:26:41 AM

DIST	COUNTY	ROUTE	POST MILES TOTAL PROJECT	SHEET No	TOTAL SHEETS
04	CC/Mrn	580	5.0/7.8, 0.0/3.3	546	579

REGISTERED CIVIL ENGINEER 7/14/16 DATE

7/26/16
PLANS APPROVAL DATE

REGISTERED PROFESSIONAL ENGINEER E. OKADA No. S4415 Exp. 6-30-18 STRUCTURAL STATE OF CALIFORNIA

The State of California or its officers or agents shall not be responsible for the accuracy or completeness of scanned copies of this plan sheet.

HNTB CORPORATION
1111 BROADWAY
9TH FLOOR
OAKLAND, CA 94607

BAY AREA TOLL AUTHORITY
375 BEALE STREET, SUITE 800
SAN FRANCISCO, CA 94105

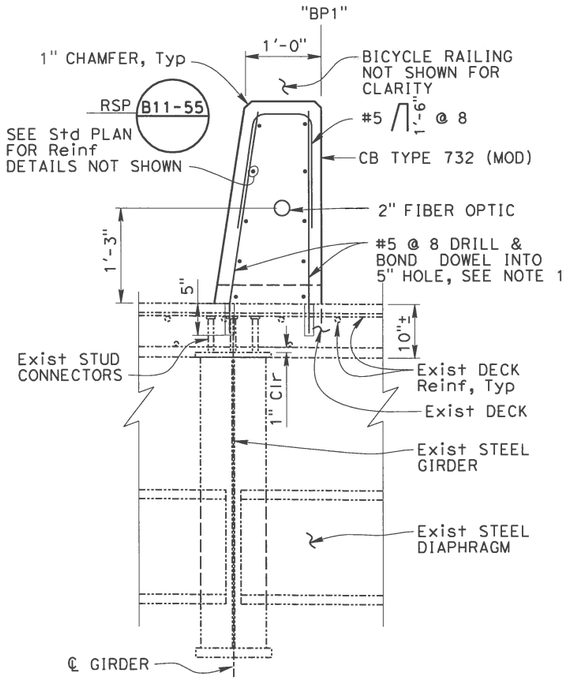

DETAIL A
CONCRETE BARRIER TYPE 732 (MOD)
1"=1'-0"

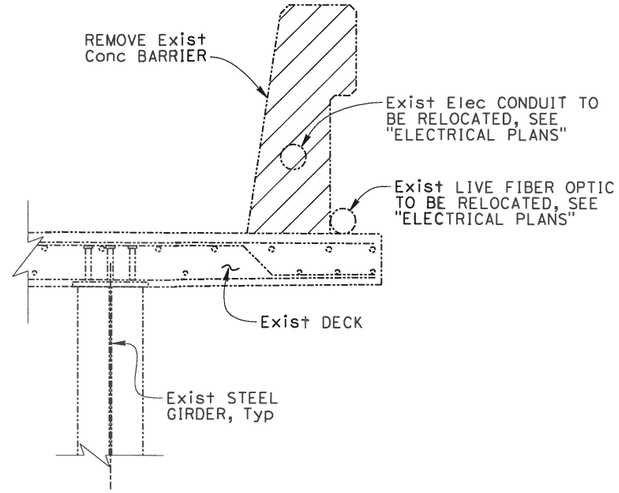

DETAIL B
CONCRETE BARRIER REMOVAL
1"=1'-0"

NOTES:

1. The Contractor shall determine location of existing deck reinforcement and shear studs by chipping concrete or by non-destructive locating methods and avoid conflicts prior to installation of drill and bond dowels. Refer to as-builts for Scofield Avenue Undercrossing for more information.
2. Exist reinf shall not be cut or damaged during drill and bond dowel installation.
3. Barrier joint locations and widths match deck joint locations and widths.
4. All barrier reinforcement shall be epoxy coated.

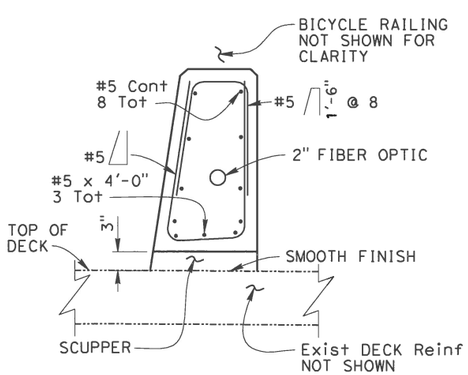

SCUPPER SECTION A-A
1"=1'-0"

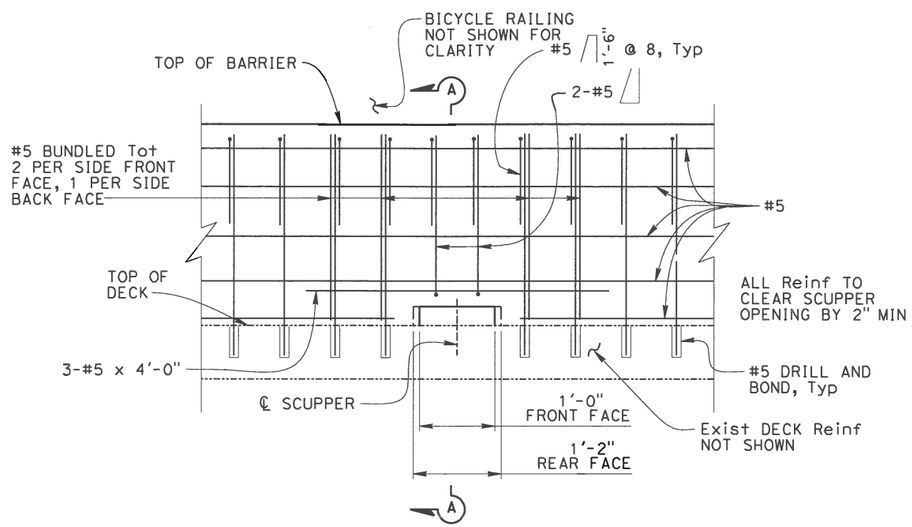

SCUPPER ELEVATION
1"=1'-0"

SCUPPER LOCATION	SCUPPER DIMENSIONS	SPACING C-C
"CC-W" 1015+70 TO "CC-W" 1018+40	3"x12"	6'
"CC-W" 1018+40 TO "CC-W" 1019+90	3"x12"	4'

DESIGN OVERSIGHT
7/14/16
SIGN OFF DATE

	BY	CHECKED
DESIGN	G. Iwamoto	G. Yu
DETAILS	H. Paige	G. Yu
QUANTITIES	E. Okada	G. Yu

PREPARED FOR THE STATE OF CALIFORNIA DEPARTMENT OF TRANSPORTATION

Erik Okada
PROJECT ENGINEER

BRIDGE NO. 28-140R
POST MILES 5.80

SCOFIELD AVENUE UNDERCROSSING (MODIFY)
BARRIER DETAILS NO. 1

DESIGN DETAIL SHEET (ENGLISH) (REV. 03/14/12)

ORIGINAL SCALE IN INCHES FOR REDUCED PLANS 0 1 2 3

UNIT: 0000
PROJECT NUMBER & PHASE: 04140005521
CONTRACT NO.: 04-2J6804

DISREGARD PRINTS BEARING EARLIER REVISION DATES

REVISION DATES

SHEET 7 OF 12

FILE => 056-28-0140-t-brdt01.dgn

USERNAME => hulit DATE PLOTTED => 7/14/2016 TIME PLOTTED => 10:26:42 AM

DIST	COUNTY	ROUTE	POST MILES TOTAL PROJECT	SHEET No	TOTAL SHEETS
04	CC/Mrn	580	5.0/7.8, 0.0/3.3	547	579

REGISTERED CIVIL ENGINEER 7/14/16 DATE

7/26/16
PLANS APPROVAL DATE

REGISTERED PROFESSIONAL ENGINEER E. OKADA No. S4415 Exp. 6-30-18 STRUCTURAL STATE OF CALIFORNIA

The State of California or its officers or agents shall not be responsible for the accuracy or completeness of scanned copies of this plan sheet.

HNTB CORPORATION
1111 BROADWAY
9TH FLOOR
OAKLAND, CA 94607

BAY AREA TOLL AUTHORITY
375 BEALE STREET, SUITE 800
SAN FRANCISCO, CA 94105

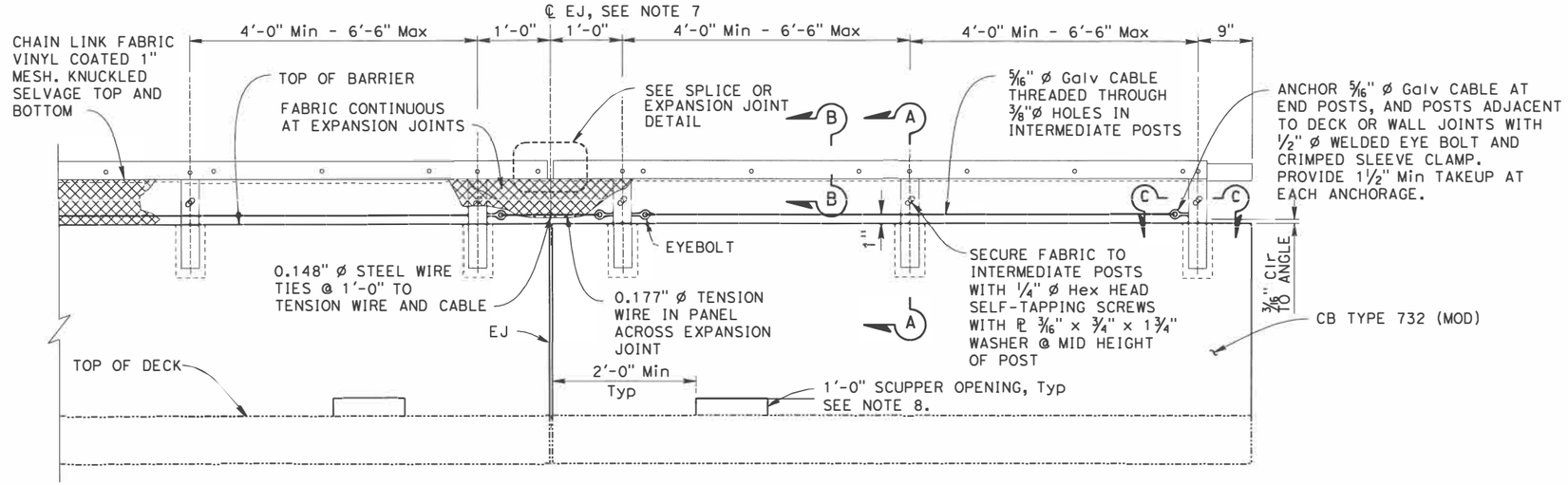

TYPICAL BICYCLE RAILING DETAILS

Scale: 1"=1'-0"

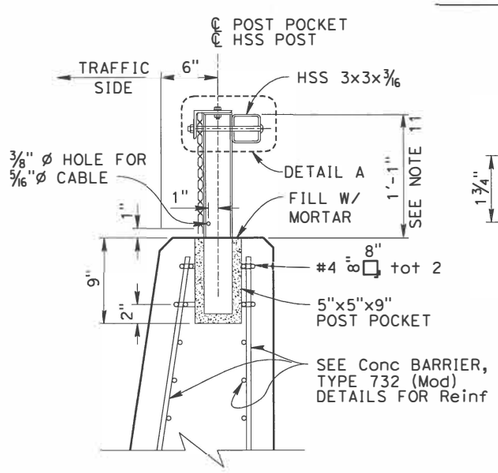

SECTION A-A

Scale: 1 1/2" = 1'-0"

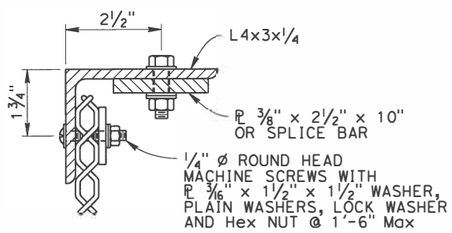

SECTION B-B

Scale: 6" = 1'-0"

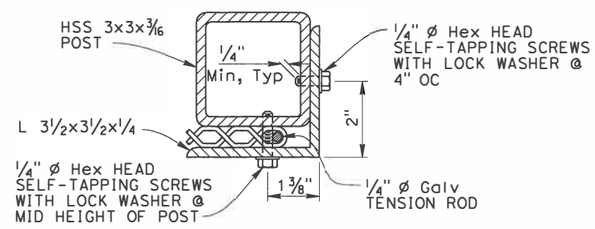

SECTION C-C

Scale: 6" = 1'-0"

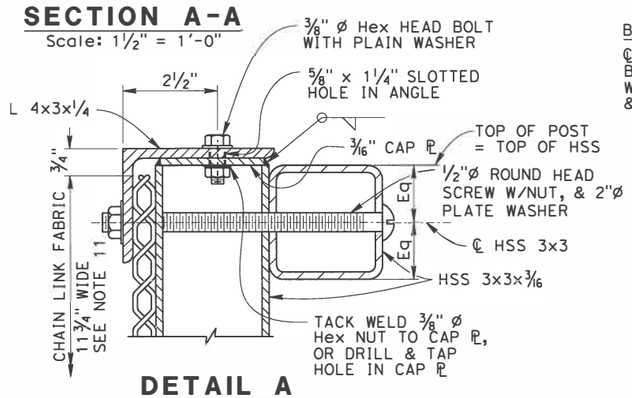

DETAIL A

Scale: 6" = 1'-0"

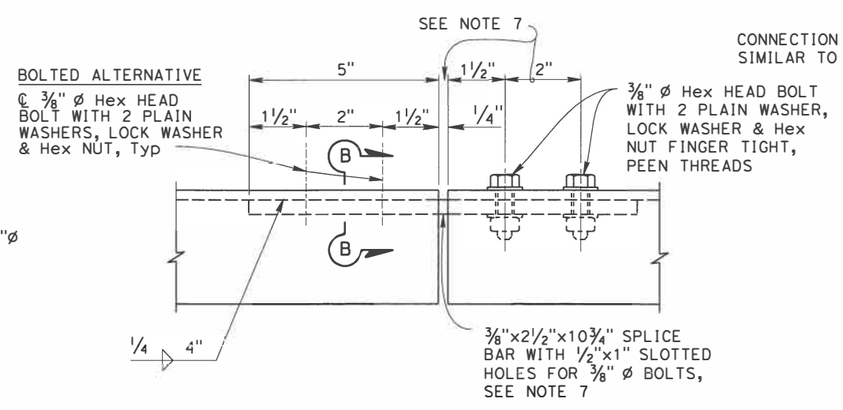

SPLICE OR EXPANSION JOINT DETAIL

Scale: 6" = 1'-0"

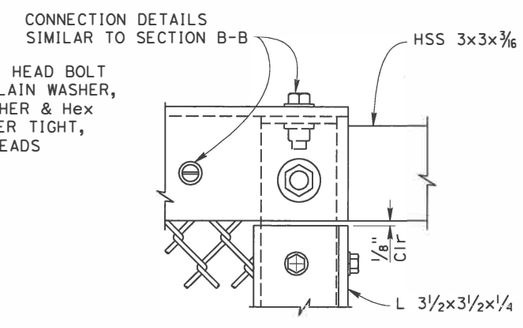

END POST ELEVATION

Scale: 6" = 1'-0"

NOTES:

1. Posts shall be vertical.
2. Railing shall conform to horizontal and vertical alignment. When railing is placed on a curved horizontal alignment with radius of 148'-0" or less, thread the 5/16" Ø cable through 3/8" Ø welded eye rods embedded 4" into the top of the concrete parapet and equally spaced to limit the midordinate distance between the 5/16" Ø cable and the curve to 1" maximum. Horizontal angle shall be bent to conform to horizontal alignment if radius is 148'-0" or less and may be on 10'-0" chords if radius is over 148'-0".
3. Horizontal angle shall be continuous over not less than two intermediate posts, except that a shorter length is permitted at expansion joints, electroliers and other rail discontinuities.
4. When rail is on slope, place fabric parallel to slope.
5. For tube expansion joint details, splice detail and rail cap details, see sheet "BARRIER DETAILS NO. 3".
6. Provide thimbles at all cable loops.
7. Expansion joint same dimension as expansion joint in deck or wall. Increase slotted hole length and splice bar length correspondingly. For conduit expansion fitting see Std plans ES-9B.
8. See sheet "BARRIER DETAILS - 1" for scupper spacing.
9. All barrier reinforcement shall be epoxy coated.
10. Powder coat all steel and connection hardware.
11. Height of bicycle railing varies so that top of railing is 42" minimum above top of pavement. See "PAVEMENT ELEVATIONS" sheet for more information.

DESIGN OVERSIGHT
7/14/16
SIGN OFF DATE

	BY	CHECKED
DESIGN	G. Iwamoto	G. Yu
DETAILS	H. Paige	G. Yu
QUANTITIES	E. Okada	G. Yu

PREPARED FOR THE STATE OF CALIFORNIA DEPARTMENT OF TRANSPORTATION

Erik Okada
PROJECT ENGINEER

BRIDGE NO. 28-140R
POST MILES 5.80

SCOFIELD AVENUE UNDERCROSSING (MODIFY)

BARRIER DETAILS NO. 2

DESIGN DETAIL SHEET (ENGLISH) (REV. 03/14/12)

ORIGINAL SCALE IN INCHES FOR REDUCED PLANS 0 1 2 3

UNIT: 0000
PROJECT NUMBER & PHASE: 04140005521
CONTRACT NO.: 04-2J6804

DISREGARD PRINTS BEARING EARLIER REVISION DATES

REVISION DATES

SHEET 8 OF 12

FILE => 057-28-0140-t-brdt02.dgn

USERNAME => $USER$ DATE PLOTTED => $DATE$ TIME PLOTTED => $TIME$

DIST	COUNTY	ROUTE	POST MILES TOTAL PROJECT	SHEET No	TOTAL SHEETS
04	CC/Mrn	580	5.0/7.8, 0.0/3.3	548	579

REGISTERED CIVIL ENGINEER 7/14/16 DATE

7/26/16
PLANS APPROVAL DATE

REGISTERED PROFESSIONAL ENGINEER E. OKADA No. S4415 Exp. 6-30-18 STRUCTURAL STATE OF CALIFORNIA

The State of California or its officers or agents shall not be responsible for the accuracy or completeness of scanned copies of this plan sheet.

HNTB CORPORATION
1111 BROADWAY
9TH FLOOR
OAKLAND, CA 94607

BAY AREA TOLL AUTHORITY
375 BEALE STREET, SUITE 800
SAN FRANCISCO, CA 94105

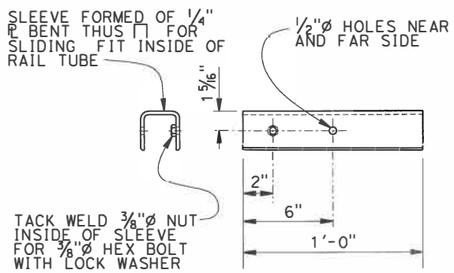

SLEEVE DETAIL

NO SCALE

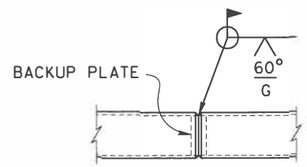

WELDED SPLICE DETAIL

NO SCALE

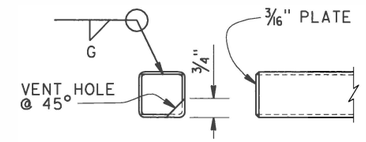

RAIL CAP DETAIL

NO SCALE

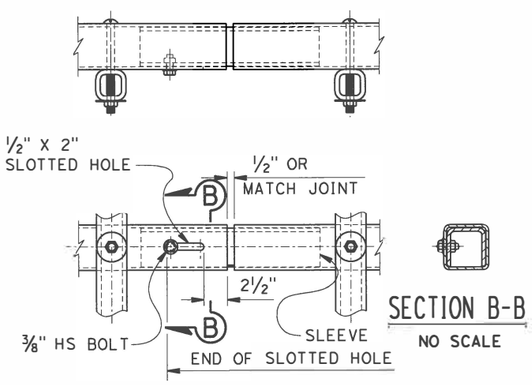

SECTION B-B

NO SCALE

TUBE EXPANSION JOINT DETAILS

NO SCALE

NOTES:

1. Post shall be vertical.
2. Rail tubes must be shop bent or fabricated to fit horizontal curve when radius is less than 950'.
3. Tube expansion joints must be located in the tubes spanning deck or wall joints. Increase joint width in tubes to match expansion joint width and increase sleeve length correspondingly.
4. Top rail tube must be continuous over not less than two posts except a short post spacing is permitted near deck or wall joints, electroliers, or other rail discontinuities as noted.

   See Project Plans for limits of bicycle railing.

DESIGN OVERSIGHT
7/14/16
SIGN OFF DATE

	BY	CHECKED
DESIGN	G. Iwamoto	G. Yu
DETAILS	H. Paige	G. Yu
QUANTITIES	E. Okada	G. Yu

PREPARED FOR THE STATE OF CALIFORNIA DEPARTMENT OF TRANSPORTATION

Erik Okada
PROJECT ENGINEER

BRIDGE NO. 28-140R
POST MILES 5.80

SCOFIELD AVENUE UNDERCROSSING (MODIFY)
BARRIER DETAILS NO. 3

DESIGN DETAIL SHEET (ENGLISH) (REV. 03/14/12)

ORIGINAL SCALE IN INCHES FOR REDUCED PLANS 0 1 2 3

UNIT: 0000
PROJECT NUMBER & PHASE: 04140005521
CONTRACT NO.: 04-2J6804

DISREGARD PRINTS BEARING EARLIER REVISION DATES

REVISION DATES

SHEET 9 OF 12

FILE => 058-28-0140-t-brdt03.dgn

USERNAME => $USER$ DATE PLOTTED => $DATE$ TIME PLOTTED => $TIME$

DIST	COUNTY	ROUTE	POST MILES TOTAL PROJECT	SHEET No	TOTAL SHEETS
04	CC/Mrn	580	5.0/7.8, 0.0/3.3	549	579

REGISTERED CIVIL ENGINEER — DATE 7/14/16

7/26/16
PLANS APPROVAL DATE

REGISTERED PROFESSIONAL ENGINEER — E. OKADA — No. S4415 — Exp. 6-30-18 — STRUCTURAL — STATE OF CALIFORNIA

The State of California or its officers or agents shall not be responsible for the accuracy or completeness of scanned copies of this plan sheet.

HNTB CORPORATION
1111 BROADWAY
9TH FLOOR
OAKLAND, CA 94607

BAY AREA TOLL AUTHORITY
375 BEALE STREET, SUITE 800
SAN FRANCISCO, CA 94105

NOTES:

1. Railing shall conform to horizontal and vertical alignment. Posts shall be vertical.
2. Horizontal pipes shall be bent if radius is 150'-0' or less-may be 8'-0" chords if radius is over 150'-0".
3. Peen all 3/8" ø bolts.
4. When railing is on slope, fabric shall be placed parallel to slope.
5. For Architectural treatment See LANDSCAPE ARCHITECTURE Drawings.
6. Expansion joint same dimension as expansion joint in deck/wall. increase slotted hole length and splice bar length as needed.
7. All curb reinforcement shall be epoxy coated.
8. Powder coat all steel and connection hardware.

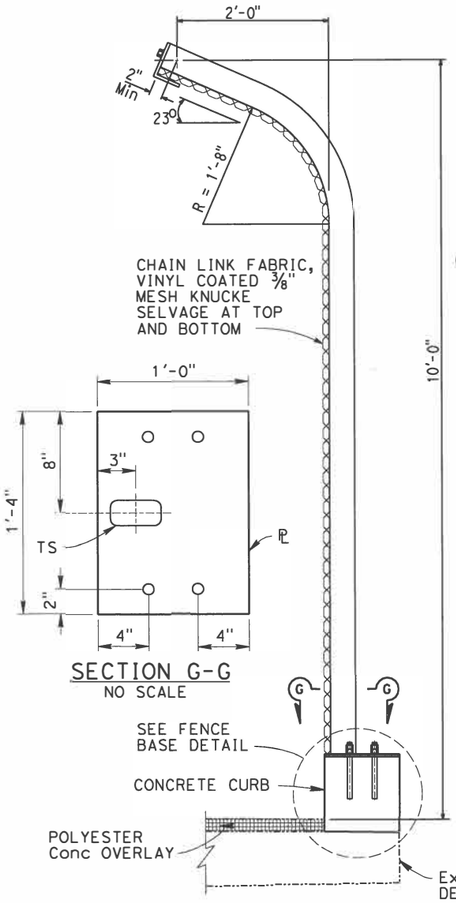

SECTION G-G
NO SCALE

CHAIN LINK RAILING & CONCRETE CURB SECTION
NO SCALE

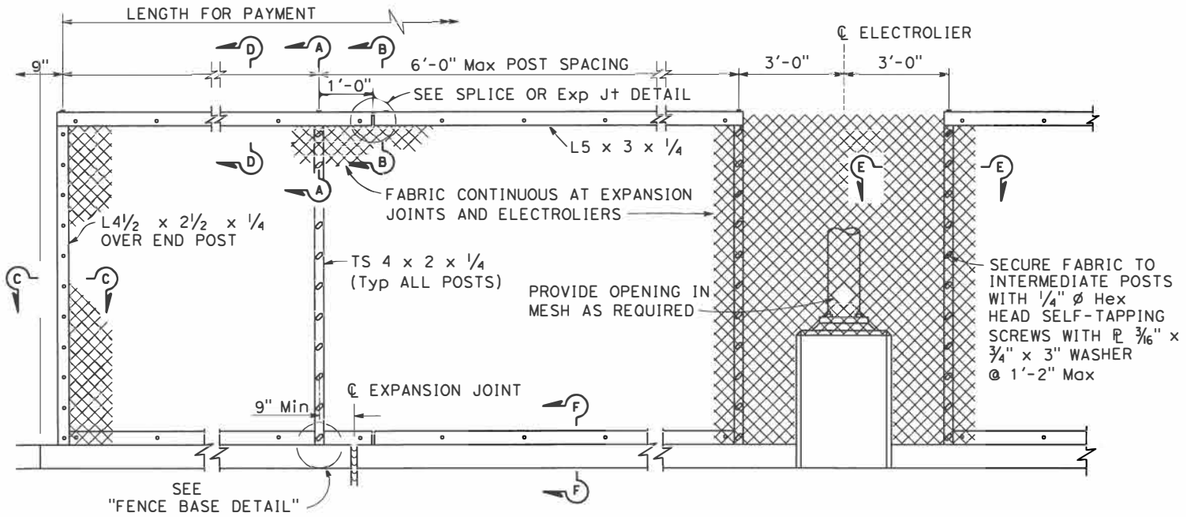

ELEVATION
NO SCALE

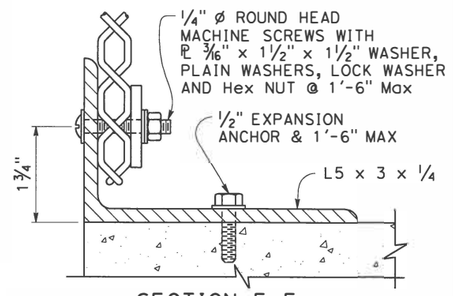

SECTION F-F
NO SCALE

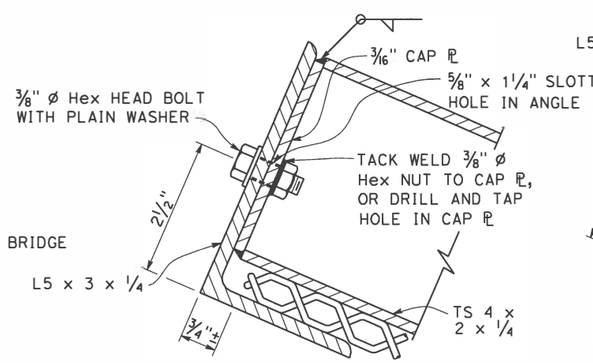

SECTION A-A
NO SCALE

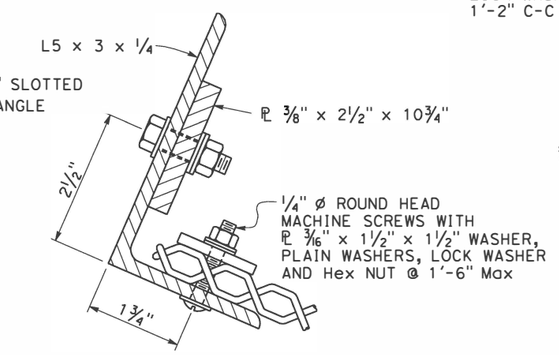

SECTION B-B
NO SCALE

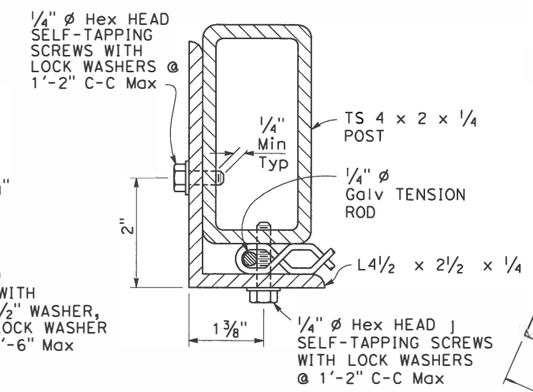

SECTION C-C
NO SCALE

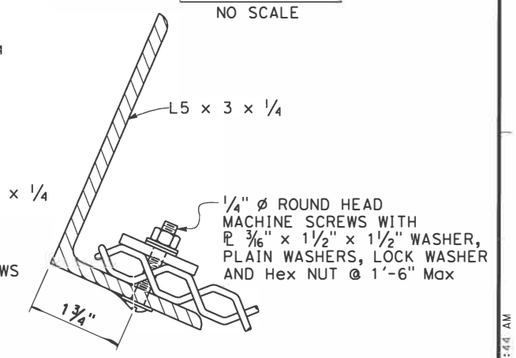

SECTION D-D
NO SCALE

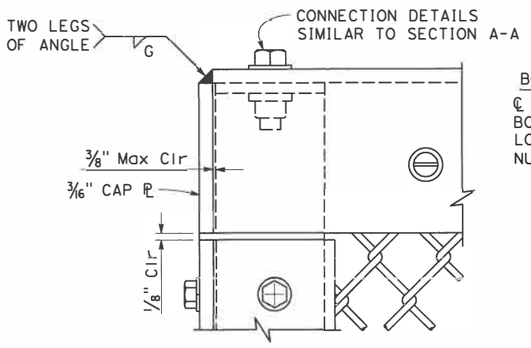

END POST ELEVATION
NO SCALE

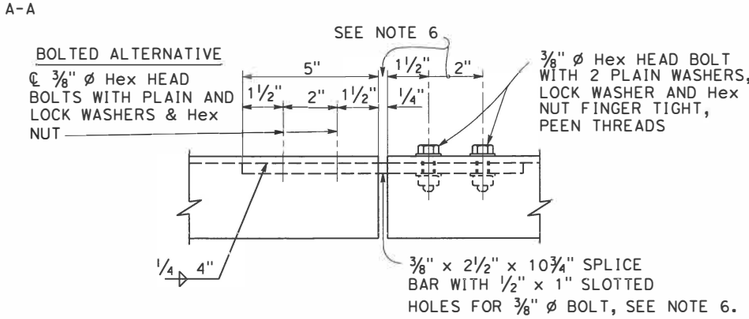

SPLICE OR EXPANSION JOINT DETAIL
NO SCALE

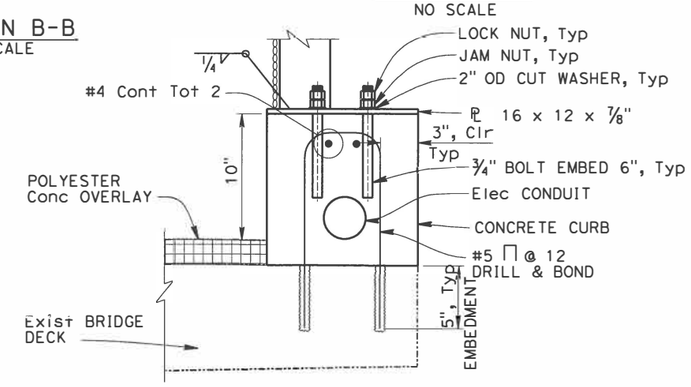

FENCE BASE DETAIL
NO SCALE

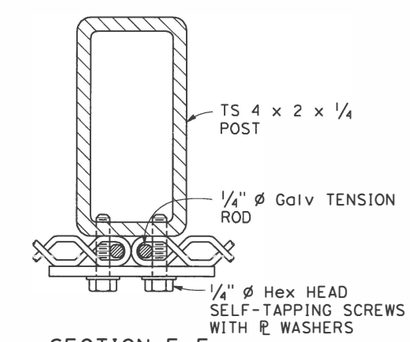

SECTION E-E
NO SCALE

DESIGN OVERSIGHT — 7/14/16 — SIGN OFF DATE

	BY	CHECKED
DESIGN	G. Iwamoto	E. Okada
DETAILS	H. Paige	M. Vargas
QUANTITIES	E. Okada	G. Yu

PREPARED FOR THE STATE OF CALIFORNIA DEPARTMENT OF TRANSPORTATION

Erik Okada — PROJECT ENGINEER

BRIDGE NO. 28-140R
POST MILES 5.92

SCOFIELD AVENUE UNDERCROSSING (MODIFY)
CHAIN LINK RAILING (TYPE CL-8 MOD 2) DETAILS NO. 1

DESIGN DETAIL SHEET (ENGLISH) (REV. 03/14/12)

ORIGINAL SCALE IN INCHES FOR REDUCED PLANS 0 1 2 3

UNIT: 0000
PROJECT NUMBER & PHASE: 04140005521
CONTRACT NO.: 04-2J6804

DISREGARD PRINTS BEARING EARLIER REVISION DATES

REVISION DATES

SHEET 10 OF 12

FILE => 059-28-0140-t-brdt04.dgn

USERNAME => null
DATE PLOTTED => 7/14/2016
TIME PLOTTED => 10:26:44 AM

DIST	COUNTY	ROUTE	POST MILES TOTAL PROJECT	SHEET No	TOTAL SHEETS
04	CC/Mrn	580	5.0/7.8, 0.0/3.3	550	579

REGISTERED CIVIL ENGINEER 7/14/16 DATE

7/26/16
PLANS APPROVAL DATE

REGISTERED PROFESSIONAL ENGINEER E. OKADA No. S4415 Exp. 6-30-18 STRUCTURAL STATE OF CALIFORNIA

The State of California or its officers or agents shall not be responsible for the accuracy or completeness of scanned copies of this plan sheet.

HNTB CORPORATION
1111 BROADWAY
9TH FLOOR
OAKLAND, CA 94607

BAY AREA TOLL AUTHORITY
375 BEALE STREET, SUITE 800
SAN FRANCISCO, CA 94105

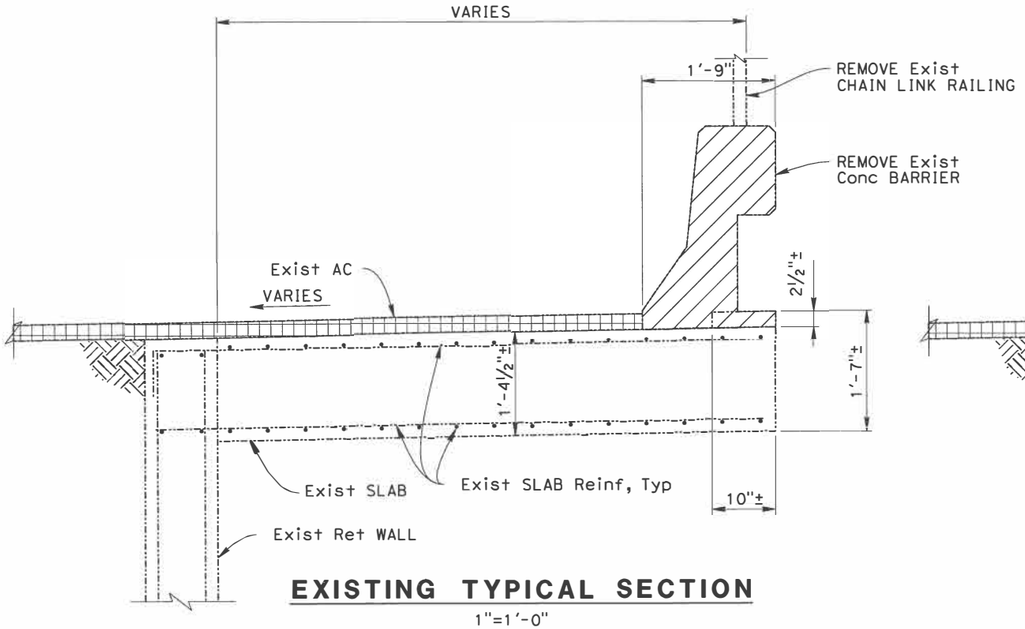

EXISTING TYPICAL SECTION

1"=1'-0"

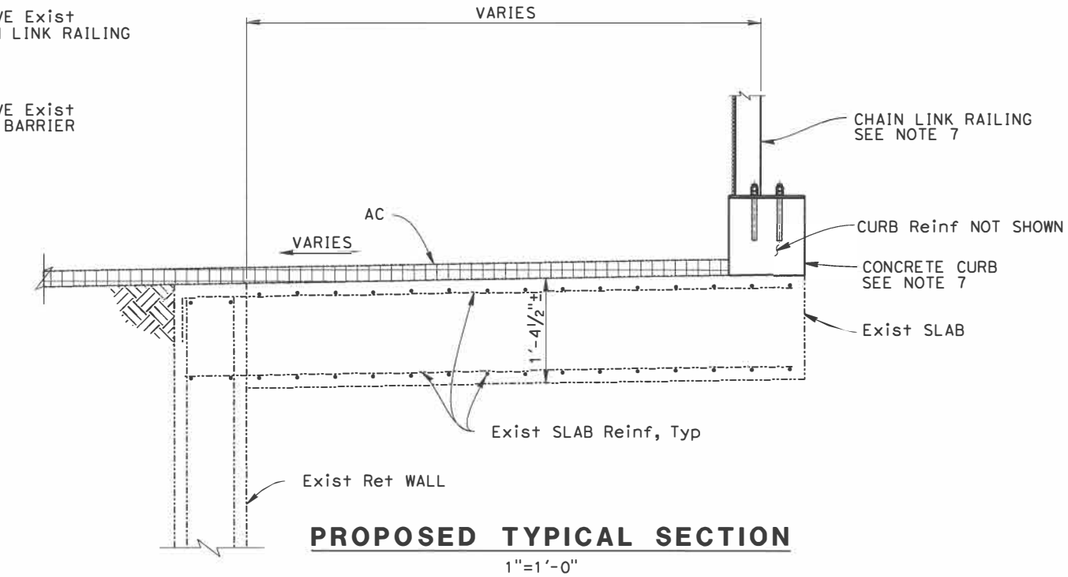

PROPOSED TYPICAL SECTION

1"=1'-0"

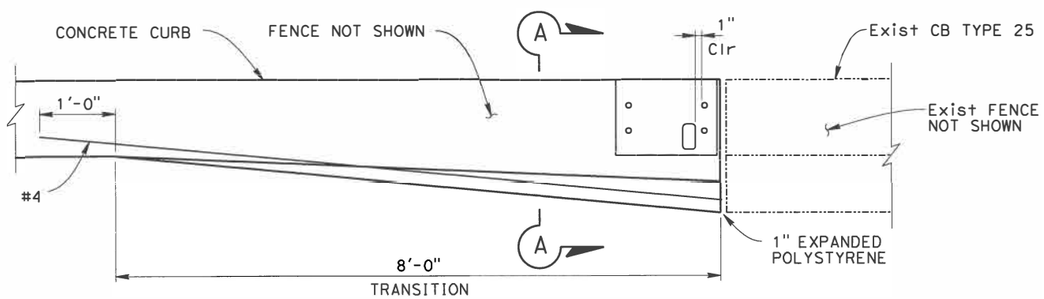

TRANSITION PLAN

1"=1'-0"

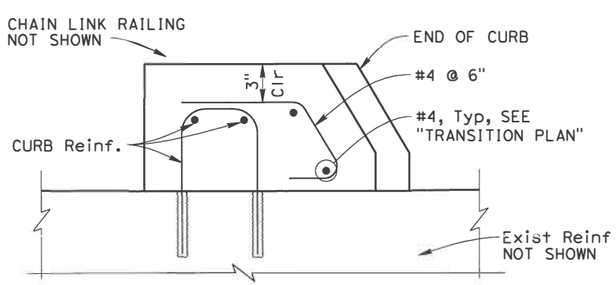

SECTION A-A

2"=1'-0"

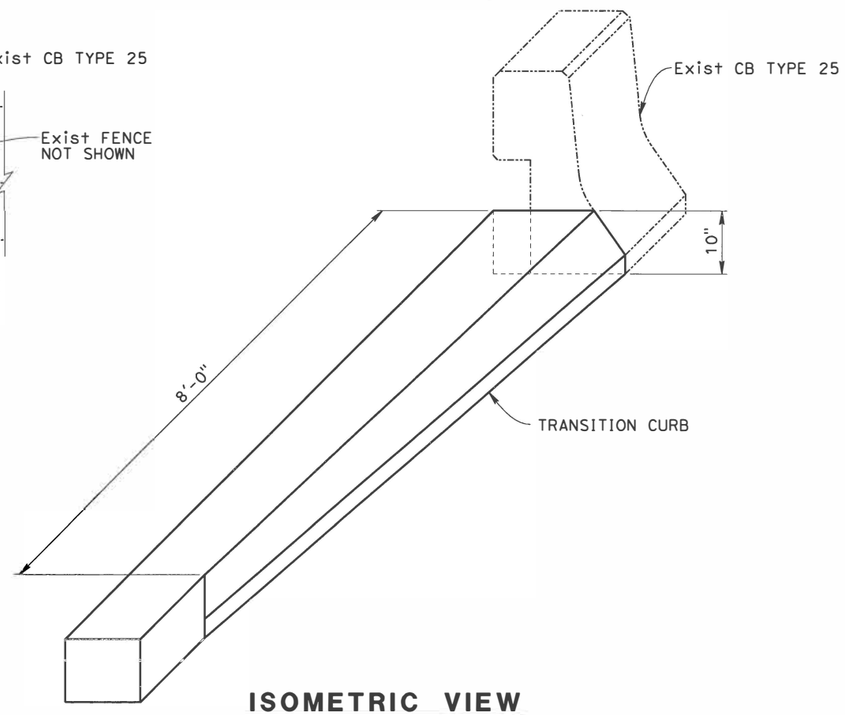

ISOMETRIC VIEW

NO SCALE

NOTES:

1. For Roadway elevations see "ROADWAY PLANS".
2. For Utility information see "UTILITY PLANS".
3. For Drainage information see "DRAINAGE PLANS".
4. For Layout of temporary barriers see "STAGE CONSTRUCTION & TRAFFIC HANDLING PLANS".
5. The Contractor shall verify all controlling dimensions before ordering or fabricating any material.
6. Typical section applies from beginning of existing retaining wall to "BP1" 1024+82.73. For typical section along existing bridge, see "GENERAL PLANS NO. 2".
7. For curb and fence details, see "CHAIN LINK RAILING (TYPE CL-8 MOD 2) DETAILS NO. 1".
8. For scupper spacing and details, see "BARRIER DETAILS NO. 1" and "LIGHT POLE PEDESTAL DETAILS".

DESIGN OVERSIGHT
7/14/16
SIGN OFF DATE

	BY	CHECKED
DESIGN	G. Iwamoto	E. Okada
DETAILS	H. Paige	M. Vargas
QUANTITIES	E. Okada	G. Yu

PREPARED FOR THE STATE OF CALIFORNIA DEPARTMENT OF TRANSPORTATION

Erik Okada
PROJECT ENGINEER

BRIDGE NO. 28-140R
POST MILES 5.92

SCOFIELD AVENUE UNDERCROSSING (MODIFY)
CHAIN LINK RAILING (TYPE CL-8 MOD 2) DETAILS NO. 2

DESIGN DETAIL SHEET (ENGLISH) (REV. 03/14/12)

ORIGINAL SCALE IN INCHES FOR REDUCED PLANS 0 1 2 3

UNIT: 0000
PROJECT NUMBER & PHASE: 04140005521
CONTRACT NO.: 04-2J6804

DISREGARD PRINTS BEARING EARLIER REVISION DATES

REVISION DATES

SHEET 11 OF 12

FILE => 060-28-0140-t-brdt05.dgn

USERNAME => hu111 DATE PLOTTED => 7/14/2016 TIME PLOTTED => 10:26:45 AM

DIST	COUNTY	ROUTE	POST MILES TOTAL PROJECT	SHEET No	TOTAL SHEETS
04	CC/Mrn	580	5.0/7.8, 0.0/3.3	551	579

REGISTERED CIVIL ENGINEER — DATE 7/14/16

7/26/16
PLANS APPROVAL DATE

REGISTERED PROFESSIONAL ENGINEER — E. OKADA — No. S4415 — Exp. 6-30-18 — STRUCTURAL — STATE OF CALIFORNIA

The State of California or its officers or agents shall not be responsible for the accuracy or completeness of scanned copies of this plan sheet.

HNTB CORPORATION
1111 BROADWAY
9TH FLOOR
OAKLAND, CA 94607

BAY AREA TOLL AUTHORITY
375 BEALE STREET, SUITE 800
SAN FRANCISCO, CA 94105

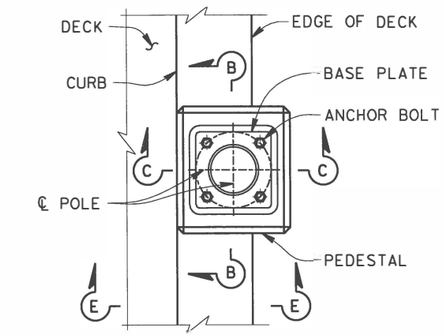

PLAN
1"=1'-0"

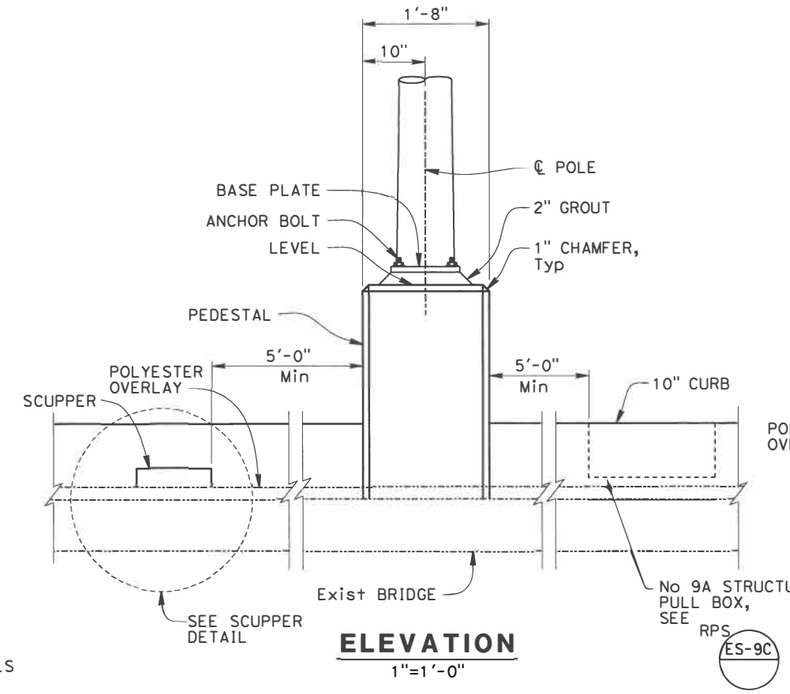

ELEVATION
1"=1'-0"

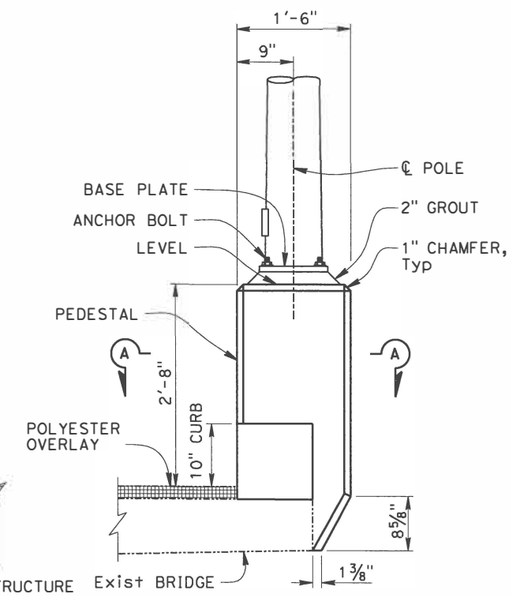

ELEVATION
1"=1'-0"

LEGEND:

- DENOTES Exist STRUCTURE
- DENOTES NEW STRUCTURE
- DENOTES LIMITS OF REMOVAL OF EXISTING STRUCTURES, INCLUDING; CONCRETE DECK, BARRIERS, RAILING, LIGHTING STANDARDS.

NOTES:

1. Place edge of Scupper 14" Min from ℄ of post.
2. See "SCOFIELD AVENUE UNDERCROSSING (MODIFY) - BARRIER DETAILS NO. 1" for scupper spacing.
3. See "ELECTRICAL PLANS" for light pole, conduit and pull box locations and details.
4. All curb reinforcement shall be epoxy coated.

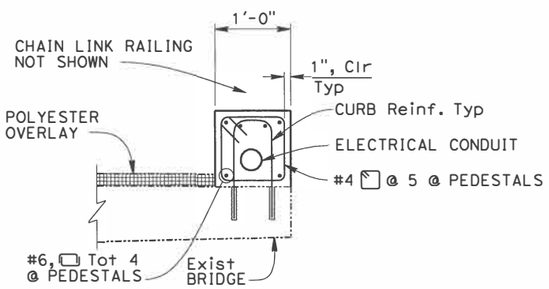

SECTION E-E
1"=1'-0"

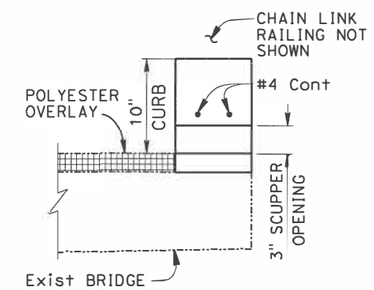

SECTION D-D
1½"=1'-0"

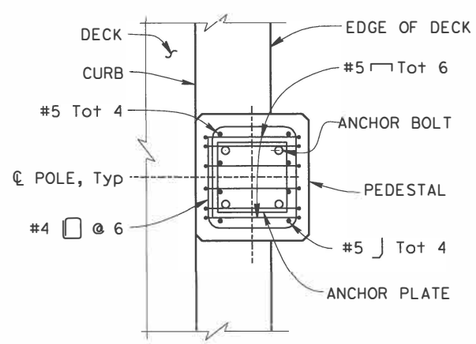

SECTION A-A
1"=1'-0"

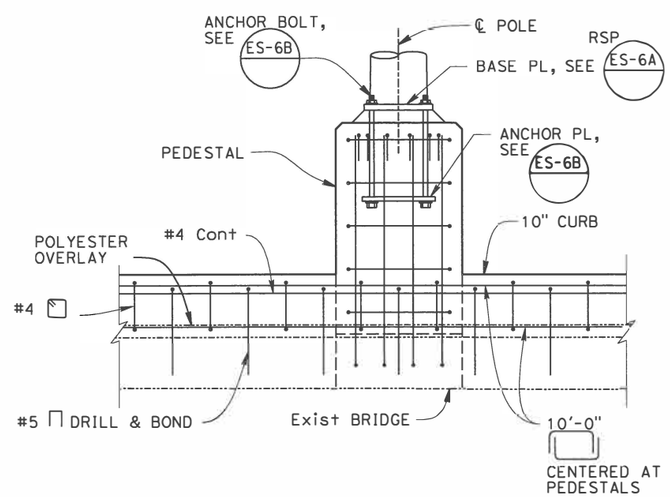

SECTION B-B
1"=1'-0"

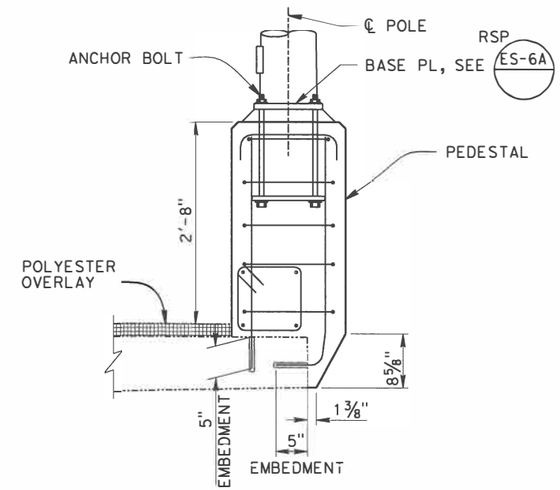

SECTION C-C
1"=1'-0"

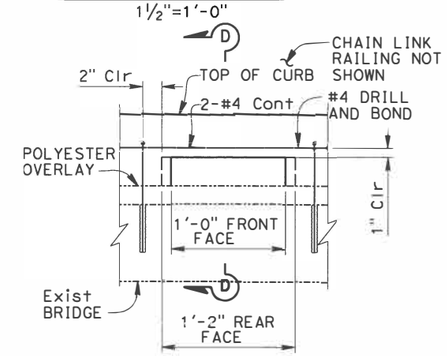

SCUPPER DETAIL
1½"=1'-0"

DESIGN OVERSIGHT
7/14/16
SIGN OFF DATE

	BY	CHECKED
DESIGN	M. Vargas	G. Yu
DETAILS	H. Paige	M. Vargas
QUANTITIES	E. Okada	G. Yu

PREPARED FOR THE STATE OF CALIFORNIA DEPARTMENT OF TRANSPORTATION

Erik Okada
PROJECT ENGINEER

BRIDGE NO. 28-140R
POST MILES 5.80

SCOFIELD AVENUE UNDERCROSSING (MODIFY)
LIGHT POLE PEDESTAL DETAILS

DESIGN DETAIL SHEET (ENGLISH) (REV. 03/14/12)

ORIGINAL SCALE IN INCHES FOR REDUCED PLANS 0 1 2 3

UNIT: 0000
PROJECT NUMBER & PHASE: 04140005521
CONTRACT NO.: 04-2J6804

DISREGARD PRINTS BEARING EARLIER REVISION DATES

REVISION DATES

SHEET 12 OF 12

FILE => 061-28-0140-t-brdt06.dgn

USERNAME => $USER$ DATE PLOTTED => $DATE$ TIME PLOTTED => $TIME$

DIST	COUNTY	ROUTE	POST MILES TOTAL PROJECT	SHEET No	TOTAL SHEETS
04	CC/Mrn	580	5.0/7.8, 0.0/3.3	552	579

REGISTERED CIVIL ENGINEER — DATE 7/14/16

7/26/16
PLANS APPROVAL DATE

REGISTERED PROFESSIONAL ENGINEER — E. OKADA — No. S4415 — Exp. 6-30-18 — STRUCTURAL — STATE OF CALIFORNIA

The State of California or its officers or agents shall not be responsible for the accuracy or completeness of scanned copies of this plan sheet.

HNTB CORPORATION
1111 BROADWAY
9TH FLOOR
OAKLAND, CA 94607

BAY AREA TOLL AUTHORITY
375 BEALE STREET, SUITE 800
SAN FRANCISCO, CA 94105

SAN QUENTIN UC QUANTITIES

REMOVE AC SURFACING	171	SF
REMOVE CONCRETE BARRIER	85	LF
REFINISH BRIDGE DECK	461	SF
CONCRETE BARRIER TYPE 60SA (MOD)	85	LF

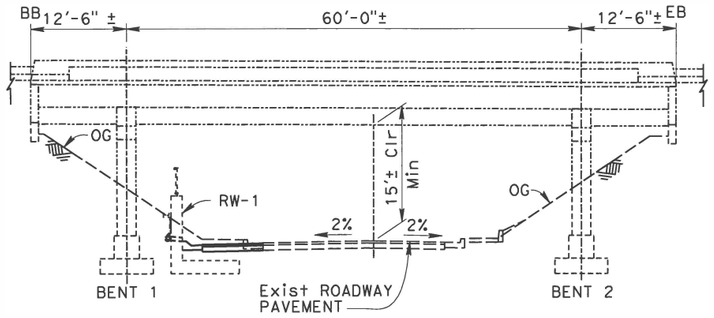

DATUM ELEVATION 0.00

ELEVATION
1"=10'-0"

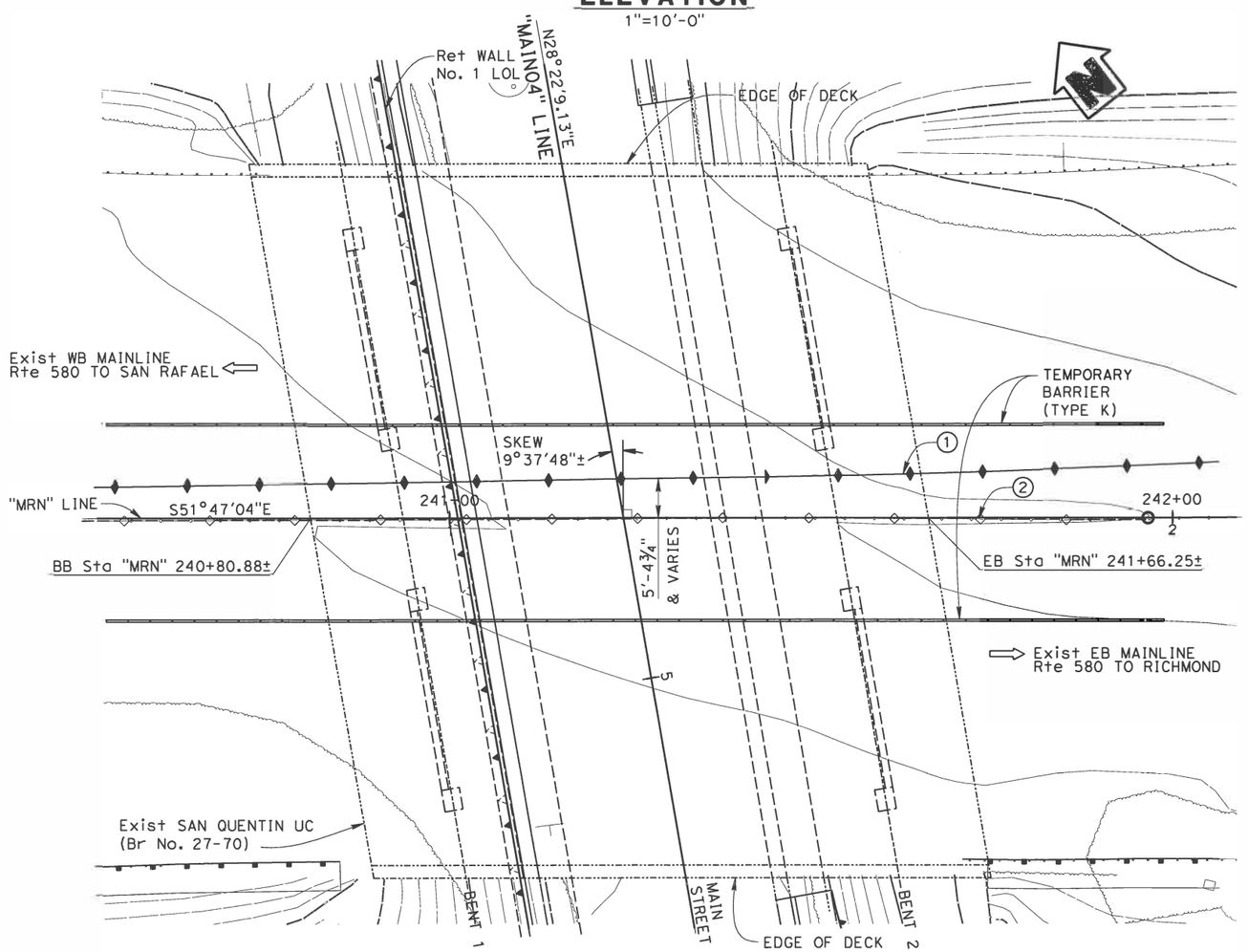

PLAN
1"=10'-0"

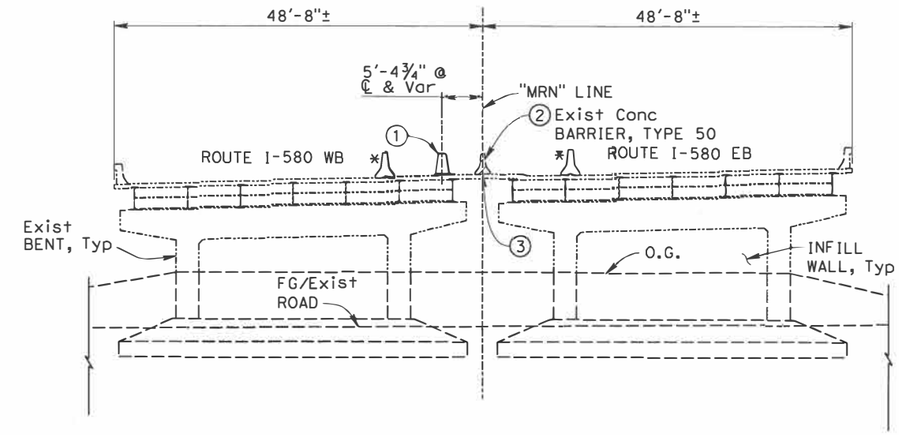

TYPICAL SECTION
1"=10'-0"

NOTES:

1. CONSTRUCT CONCRETE BARRIER TYPE 60SA (Mod).
2. REMOVE CONCRETE BARRIER.
3. REFINISH BRIDGE DECK

LEGEND:

- INDICATES DIRECTION OF TRAFFIC
- NEW CONCRETE BARRIER
- EXISTING CONCRETE BARRIER
- * TEMPORARY BARRIER (TYPE K)
- EXISTING STRUCTURE
- NEW CONSTRUCTION

DESIGN OVERSIGHT 7/14/16 SIGN OFF DATE	DESIGN	BY G. Iwamoto	CHECKED E. Okada	LOAD & RESISTANCE FACTOR DESIGN	LIVE LOADING: HS-44 AND ALTERNATIVE
	DETAILS	BY H. Paige	CHECKED E. Okada	LAYOUT	BY H. Paige / CHECKED M. Vargas
	QUANTITIES	BY G. Iwamoto	CHECKED E. Okada	SPECIFICATIONS	BY D. Desai / PLANS AND SPECS COMPARED E. Okada

PREPARED FOR THE STATE OF CALIFORNIA DEPARTMENT OF TRANSPORTATION

Erik Okada
PROJECT ENGINEER

BRIDGE NO. 27-70
POST MILES 2.63

SAN QUENTIN STREET UNDERCROSSING (MODIFY)
GENERAL PLAN

DESIGN GENERAL PLAN SHEET (ENGLISH) (REV. 06-01-09)

ORIGINAL SCALE IN INCHES FOR REDUCED PLANS 0 1 2 3

UNIT: 0000
PROJECT NUMBER & PHASE: 04140005521

DISREGARD PRINTS BEARING EARLIER REVISION DATES

REVISION DATES (PRELIMINARY STAGE ONLY)

SHEET 1 OF 4

FILE => 070-27-0070-a-gp.dgn

USERNAME => hu111 DATE PLOTTED => 7/14/2016 TIME PLOTTED => 10:26:47 AM

DIST	COUNTY	ROUTE	POST MILES TOTAL PROJECT	SHEET No	TOTAL SHEETS
04	CC/Mrn	580	5.0/7.8, 0.0/3.3	553	579

REGISTERED CIVIL ENGINEER — DATE 7/14/16

PLANS APPROVAL DATE 7/26/16

REGISTERED PROFESSIONAL ENGINEER — E. OKADA — No. S4415 — Exp. 6-30-18 — STRUCTURAL — STATE OF CALIFORNIA

The State of California or its officers or agents shall not be responsible for the accuracy or completeness of scanned copies of this plan sheet.

HNTB CORPORATION
1111 BROADWAY
9TH FLOOR
OAKLAND, CA 94607

BAY AREA TOLL AUTHORITY
375 BEALE STREET, SUITE 800
SAN FRANCISCO, CA 94105

INDEX OF DRAWINGS

SHEET No.	DESCRIPTION
1	GENERAL PLAN
2	INDEX AND GENERAL NOTES
3	BARRIER DETAILS
4	CONCRETE BARRIER TYPE 60A & TYPE 60SA MOD

CALTRANS STANDARD PLANS DATED 2010

	A10A	ABBREVIATIONS (SHEET 1 OF 2)
RSP	A10B	ABBREVIATIONS (SHEET 2 OF 2)
	A10C	LINES AND SYMBOLS (SHEET 1 OF 3)
	A10D	LINES AND SYMBOLS (SHEET 2 OF 3)
	A10E	LINES AND SYMBOLS (SHEET 3 OF 3)
	A76B	CONCRETE BARRIER TYPE 60
	A76G	CONCRETE BARRIER TYPE 60S
	A76H	CONCRETE BARRIER TYPE 60S
	T3A	TEMPORARY RAILING TYPE (K)

GENERAL NOTES
LOAD AND RESISTANCE FACTOR DESIGN

DESIGN:
AASHTO LRFD Bridge Design Specifications, 6th Edition. And Caltrans Amendments. Preface Dated November 2014.

REINFORCED CONCRETE:
f'c = 4000 psi, unless otherwise noted
fy = 60 ksi

VERTICAL DATUM:
North American Vertical Datum of 1988 (NAVD88)

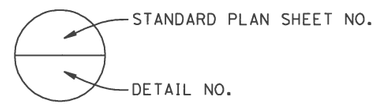

DESIGN OVERSIGHT
7/14/16
SIGN OFF DATE

	BY	CHECKED
DESIGN	G. Iwamoto	E. Okada
DETAILS	H. Paige	E. Okada
QUANTITIES	G. Iwamoto	E. Okada

PREPARED FOR THE STATE OF CALIFORNIA DEPARTMENT OF TRANSPORTATION

Erik Okada
PROJECT ENGINEER

BRIDGE NO. 27-70
POST MILES 2.63

SAN QUENTIN STREET UNDERCROSSING (MODIFY)
INDEX AND GENERAL NOTES

DESIGN DETAIL SHEET (ENGLISH) (REV. 03/14/12)

ORIGINAL SCALE IN INCHES FOR REDUCED PLANS 0 1 2 3

UNIT: 0000
PROJECT NUMBER & PHASE: 04140005521
CONTRACT NO.: 04-2J6804

DISREGARD PRINTS BEARING EARLIER REVISION DATES

REVISION DATES

SHEET 2 OF 4

FILE => 071- 27-0070-a-itp.dgn

USERNAME => hulll DATE PLOTTED => 7/14/2016 TIME PLOTTED => 10:26:48 AM

DIST	COUNTY	ROUTE	POST MILES TOTAL PROJECT	SHEET No	TOTAL SHEETS
04	CC/Mrn	580	5.0/7.8, 0.0/3.3	554	579

REGISTERED CIVIL ENGINEER — DATE 7/14/16

PLANS APPROVAL DATE 7/26/16

REGISTERED PROFESSIONAL ENGINEER — E. OKADA — No. S4415 — Exp. 6-30-18 — STRUCTURAL — STATE OF CALIFORNIA

The State of California or its officers or agents shall not be responsible for the accuracy or completeness of scanned copies of this plan sheet.

HNTB CORPORATION
1111 BROADWAY
9TH FLOOR
OAKLAND, CA 94607

BAY AREA TOLL AUTHORITY
375 BEALE STREET, SUITE 800
SAN FRANCISCO, CA 94105

NOTES:

1. For Roadway information see "ROADWAY PLANS".
2. For Utility information see "UTILITY PLANS".
3. For Drainage information see "DRAINAGE PLANS".
4. The Contractor shall verify all controlling dimensions before ordering or fabricating any material.
5. See "STAGE CONSTRUCTION" & "TRAFFIC HANDLING PLANS" for layout of Temporary Barriers.
6. All barrier reinforcement shall be epoxy coated.
7. The Contractor shall determine location of existing deck reinforcement and shear studs by chipping concrete or by non-destructive locating methods and avoid conflicts prior to installation of drill and bond dowels. Refer to as-builts for Main Street Undercrossing for more information.

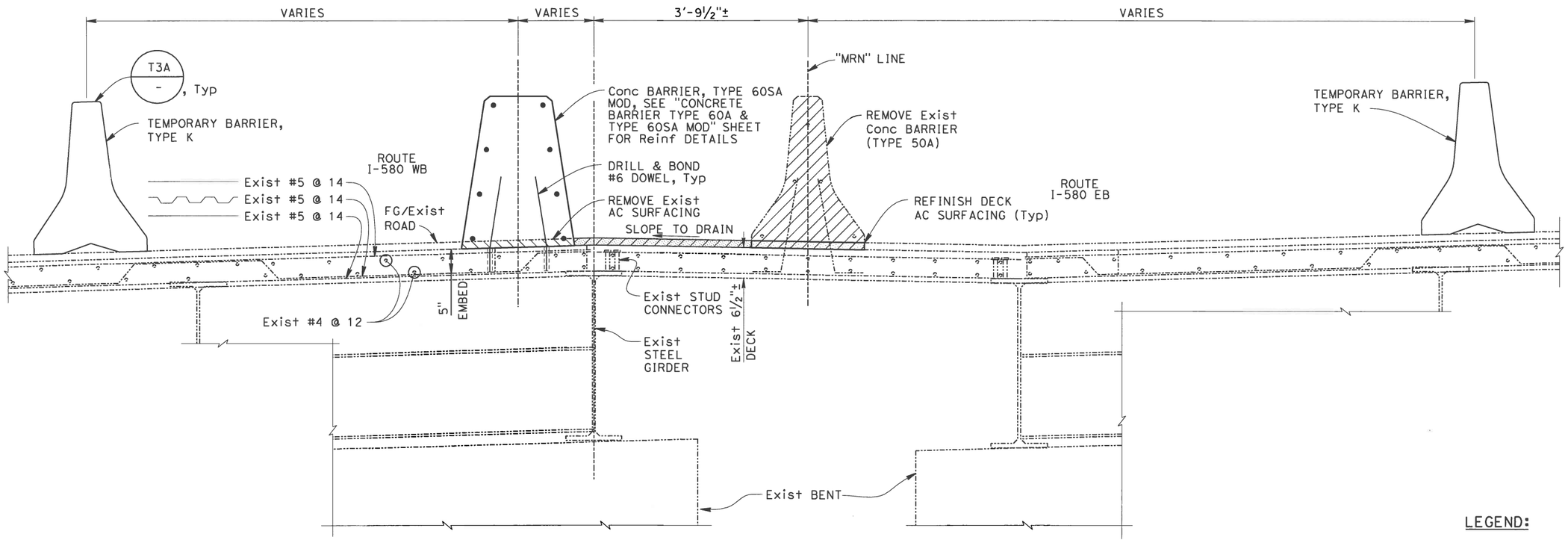

CONCRETE BARRIER REPLACEMENT DETAIL

1"=1'-0"

LEGEND:

- DENOTES Exist STRUCTURE
- DENOTES NEW STRUCTURE
- DENOTES LIMITS OF REMOVAL OF Exist STRUCTURES, INCLUDING AC SURFACING AND BARRIERS

DESIGN OVERSIGHT — 7/14/16 — SIGN OFF DATE

	BY	CHECKED
DESIGN	G. Iwamoto	E. Okada
DETAILS	H. Paige	E. Okada
QUANTITIES	G. Iwamoto	E. Okada

PREPARED FOR THE STATE OF CALIFORNIA DEPARTMENT OF TRANSPORTATION

Erik Okada — PROJECT ENGINEER

BRIDGE NO. 27-70 — POST MILES 2.63

SAN QUENTIN STREET UNDERCROSSING (MODIFY)

BARRIER DETAILS

DESIGN DETAIL SHEET (ENGLISH) (REV. 03/14/12)

ORIGINAL SCALE IN INCHES FOR REDUCED PLANS 0 1 2 3

UNIT: 0000
PROJECT NUMBER & PHASE: 04140005521
CONTRACT NO.: 04-2J6804

DISREGARD PRINTS BEARING EARLIER REVISION DATES

REVISION DATES

SHEET 3 OF 4

FILE => 072-27-0070-t-brdt01.dgn

USERNAME => hujit DATE PLOTTED => 7/14/2016 TIME PLOTTED => 10:26:49 AM

DIST	COUNTY	ROUTE	POST MILES TOTAL PROJECT	SHEET No.	TOTAL SHEETS
04	CC/Mrn	580	5.0/7.8, 0.0/3.3	555	579

REGISTERED CIVIL ENGINEER 7/14/16 DATE

7/26/16
PLANS APPROVAL DATE

REGISTERED PROFESSIONAL ENGINEER E. OKADA No. S4415 Exp. 6-30-18 STRUCTURAL STATE OF CALIFORNIA

The State of California or its officers or agents shall not be responsible for the accuracy or completeness of electronic copies of this plan sheet.

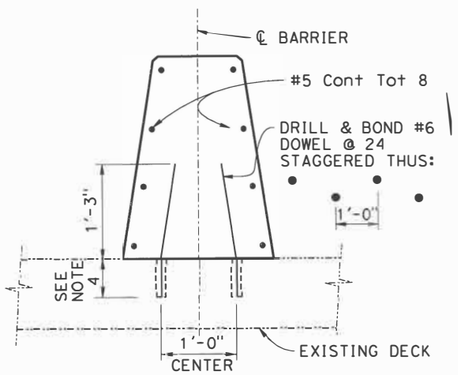

MODIFIED TYPE 60A.2 OR 60SA.2

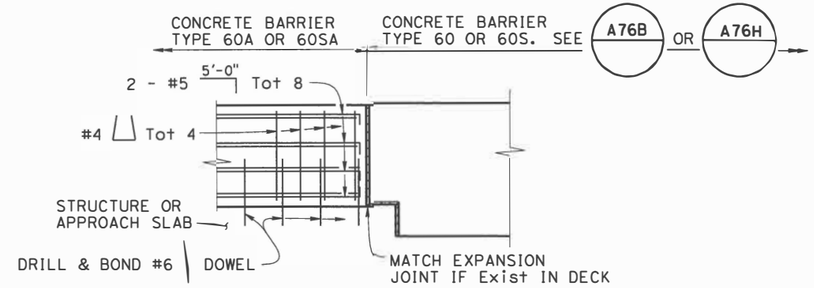

ELEVATION

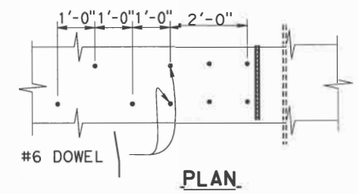

PLAN

CONNECTION TO STRUCTURE

½" = 1'-0"

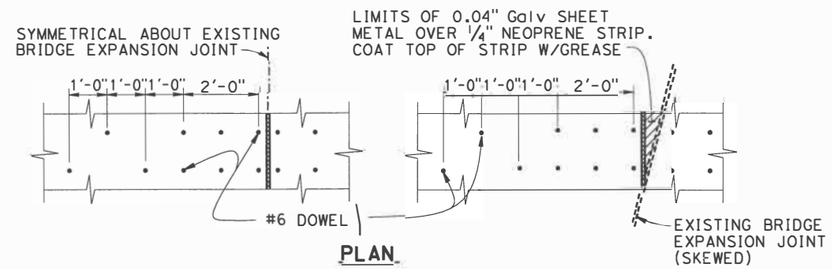

PLAN

DOWEL SPACING AT EXPANSION JOINT

½" = 1'-0"

NOTES:

1. Transverse expansion joints in concrete barrier shall match all deck joints
2. Remove all existing curbs and dikes
3. ~~Existing components of Cable Barrier may be altered and incorporated in Concrete Barriers as indicated. The existing Cable Barrier shall be removed when it is not on the centerline of the new Concrete Barrier~~
4. Depth of drilled hole equals depth of slab minus 1½", up to 6" maximum
5. Minor adjustments may be made in dowel spacing to clear main reinforcement
6. Transitions to match adjacent "Type 60A" Barrier shall have minimum flare of 20:1 off the structure
7. Barrier to be doweled on either side of deck joints.
8. For Concrete Barrier Type 60A details not shown, see STANDARD PLAN A76A. For Concrete Barrier Type 60SA details not shown, see STANDARD PLANS A76G.
9. Barrier Dimensions-Type 60A & 60SA, see sketch below:

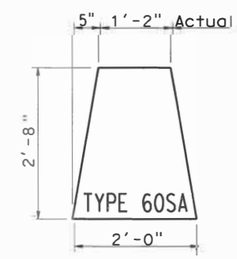

LEGEND:

- - - - - - - - Indicates existing structure
———— Indicates new structure

SCALE: 1" = 1'-0" except as noted

NOTE:
THE CONTRACTOR SHALL VERIFY ALL CONTROLLING FIELD DIMENSIONS BEFORE ORDERING OR FABRICATING ANY MATERIAL.

REVISED STANDARD DRAWING
FILE NO. xs16-100
APPROVAL DATE July 2014

1 DELETE DETAILS
2 REVISED NOTE

STATE OF CALIFORNIA
DEPARTMENT OF TRANSPORTATION

DIVISION OF ENGINEERING SERVICES

BRIDGE NO. 27-70
POST MILE 2.63

SAN QUENTIN STREET UNDERCROSSING (MODIFY)

DETAILS

CONCRETE BARRIER TYPE 60A & TYPE 60SA MOD

DS OSD 2147A (ENGLISH STANDARD DRAWING "XS" BORDER REV. (02-02-11)

ORIGINAL SCALE IN INCHES FOR REDUCED PLANS 0 1 2 3

UNIT: 0000
PROJECT NUMBER & PHASE: 04140005521
CONTRACT NO.: 04-2J6804

DISREGARD PRINTS BEARING EARLIER REVISION DATES

REVISION DATES

SHEET 4 OF 4

FILE => 073-27-0070-t-brdt02.dgn

USERNAME => bhunt DATE PLOTTED => 7/14/2016 TIME PLOTTED => 10:26:49 AM

DIST	COUNTY	ROUTE	POST MILES TOTAL PROJECT	SHEET No	TOTAL SHEETS
04	CC/Mrn	580	5.0/7.8, 0.0/3.3	556	579

REGISTERED CIVIL ENGINEER 7/14/16 DATE

7/26/16
PLANS APPROVAL DATE

REGISTERED PROFESSIONAL ENGINEER E. OKADA No. S4415 Exp. 6-30-18 STRUCTURAL STATE OF CALIFORNIA

The State of California or its officers or agents shall not be responsible for the accuracy or completeness of scanned copies of this plan sheet.

HNTB CORPORATION
1111 BROADWAY
9TH FLOOR
OAKLAND, CA 94607

BAY AREA TOLL AUTHORITY
375 BEALE STREET, SUITE 800
SAN FRANCISCO, CA 94105

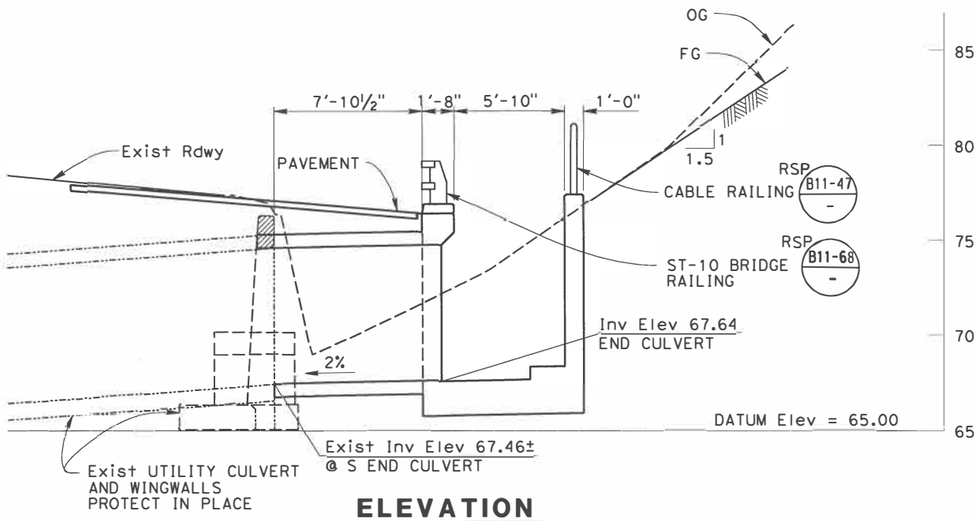

ELEVATION

¼"=1'-0"

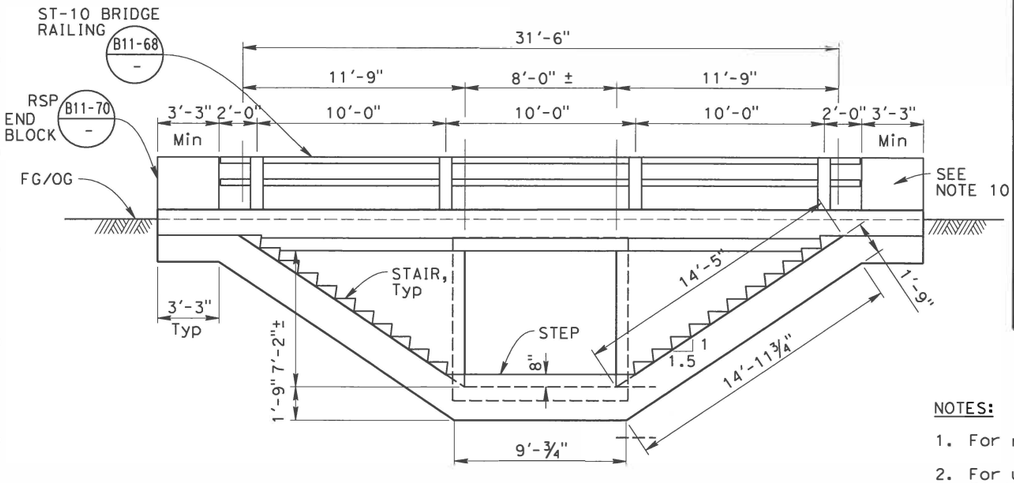

TYPICAL SECTION

¼"=1'-0"

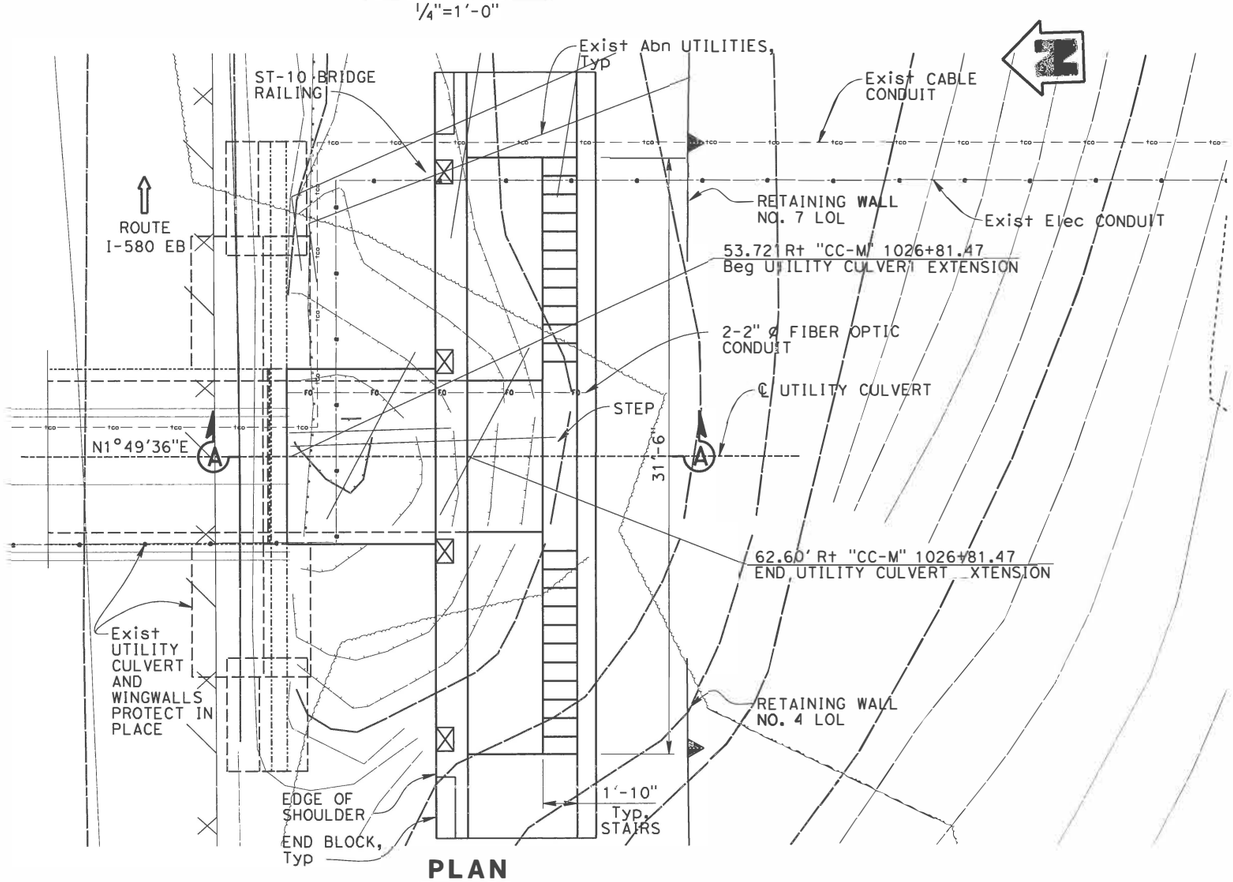

PLAN

¼"=1'-0"

NOTES:

1. For roadway information see "ROADWAY PLANS".
2. For utility information see "UTILITY PLANS". Protect all utilities in place unless noted otherwise on the "UTILITY PLANS".
3. For drainage information see "DRAINAGE PLANS".
4. For Box Culvert Details not shown see 2010 Standard Plans D80 and RSP D82.
5. For allowable construction loads on culverts see 2010 Standard Plan D88.
6. Controlling field conditions to be verified prior to start of construction.
7. For excavation and backfill limits of payment see 2010 Standard Plan A62E.
8. For Section A-A, see sheet "UTILITY CULVERT EXTENSION - DETAILS".
9. For pavement structural section, see "TYPICAL CROSS SECTIONS-X-6".
10. For typical connection details of MGS to bridge rail, see Revised Standard Plans RSP A77U1 and RSP A77U2.

UTILITY CULVERT EXTENSION QUANTITIES

STRUCTURAL CONCRETE, BOX CULVERT	47	CY
BAR REINFORCING STEEL	7,704	LB
STRUCTURE EXCAVATION (CULVERT)	69	CY
STRUCTURE BACKFILL (CULVERT)	13	CY
ROADWAY EMBANKMENT	24	CY
DRILL AND BOND DOWEL (CHEMICAL ADHESIVE)	36	EA
REMOVE CONCRETE STRUCTURE	2	CY
PIPE HANDRAILING	40	LF
CALIFORNIA ST-10 BRIDGE RAIL	34	LF

LEGEND:

- DENOTES Exist STRUCTURE
- DENOTES NEW STRUCTURE
- DENOTES LIMITS OF REMOVE CONCRETE STRUCTURE

DESIGN OVERSIGHT
7/14/16
SIGN OFF DATE

	BY	CHECKED
DESIGN	E. Okada	M. Vargas
DETAILS	H. Paige	M. Vargas
QUANTITIES	E. Okada	M. Vargas

LOAD & RESISTANCE FACTOR DESIGN — LIVE LOADING: HL-93

	BY	CHECKED
LAYOUT	H. Paige	E. Okada
SPECIFICATIONS	D. Desai	PLANS AND SPECS COMPARED D. Desai

PREPARED FOR THE STATE OF CALIFORNIA DEPARTMENT OF TRANSPORTATION

Erik Okada
PROJECT ENGINEER

BRIDGE NO. NONE
POST MILES -

UTILITY CULVERT EXTENSION
GENERAL PLAN

DESIGN GENERAL PLAN SHEET (ENGLISH) (REV. 06-01-09)

ORIGINAL SCALE IN INCHES FOR REDUCED PLANS 0 1 2 3

UNIT: 0000
PROJECT NUMBER & PHASE: 04140005521

DISREGARD PRINTS BEARING EARLIER REVISION DATES

REVISION DATES (PRELIMINARY STAGE ONLY)

SHEET 1 OF 4

FILE => 075-28-0100-c-sp01-D.dgn

USERNAME => $USER$ DATE PLOTTED => $DATE$ TIME PLOTTED => $TIME$

DIST	COUNTY	ROUTE	POST MILES TOTAL PROJECT	SHEET No	TOTAL SHEETS
04	CC/Mrn	580	5.0/7.8, 0.0/3.3	557	579

REGISTERED CIVIL ENGINEER 7/14/16 DATE

7/26/16
PLANS APPROVAL DATE

REGISTERED PROFESSIONAL ENGINEER E. OKADA No. S4415 Exp. 6-30-18 STRUCTURAL STATE OF CALIFORNIA

The State of California or its officers or agents shall not be responsible for the accuracy or completeness of scanned copies of this plan sheet.

HNTB CORPORATION
1111 BROADWAY
9TH FLOOR
OAKLAND, CA 94607

BAY AREA TOLL AUTHORITY
375 BEALE STREET, SUITE 800
SAN FRANCISCO, CA 94105

GENERAL NOTES

DESIGN:
AASHTO LRFD Bridge Design Specifications, 6th Edition with California Amendments.

REINFORCED CONCRETE:
f'c = 4000 psi, Unless Otherwise Noted
fy = 60 ksi

VERTICAL DATUM:
North American Vertical Datum of 1988 (NAVD88)

STRUCTURE STEEL

Steel plates, shapes and bars: ASTM A709

FASTENERS:

BOLTS: ASTM A307
NUTS, WASHERS: ASTM A304
ANCHOR BOLTS: ASTM F1554

WELDING:

Welding shall be per AWS D1.5.

INDEX OF DRAWINGS

SHEET No.	DESCRIPTION
1	GENERAL PLAN
2	INDEX AND GENERAL NOTES
3	DETAILS NO. 1
4	DETAILS NO. 2

CALTRANS STANDARD PLANS DATED 2010

	A10A	ABBREVIATIONS (SHEET 1 OF 2)
RSP	A10B	ABBREVIATIONS (SHEET 2 OF 2)
	A10C	LINES AND SYMBOLS (SHEET 1 OF 3)
	A10D	LINES AND SYMBOLS (SHEET 2 OF 3)
	A10E	LINES AND SYMBOLS (SHEET 3 OF 3)
	A62E	EXCAVATION AND BACKFILL-CAST-IN-PLACE REINFORCED CONCRETE BOX AND ARCH CULVERTS
	B0-3	BRIDGE DETAILS
RSP	B11-47	CABLE RAILING
	D-80	CAST-IN-PLACE REINFORCED CONCRETE SINGLE BOX CULVERT
RSP	D-82	CAST-IN-PLACE REINFORCED CONCRETE BOX CULVERT MISCELLANEOUS DETAILS
	D-88	CONSTRUCTION LOADS ON CULVERTS
RSP	B11-68	CALIFORNIA ST10 BRIDGE RAIL (SHEET 1 OF 3)
	B11-69	CALIFORNIA ST10 BRIDGE RAIL (SHEET 2 OF 3)
RSP	B11-70	CALIFORNIA ST10 BRIDGE RAIL (SHEET 3 OF 3)
RSP	A77U1	MIDWEST GUARDRAIL SYSTEM-CONNECTIONS TO BRIDGE RAILINGS WITHOUT SIDEWALKS DETAILS NO.1
RSP	A77U2	MIDWEST GUARDRAIL SYSTEM-CONNECTIONS TO BRIDGE RAILINGS WITHOUT SIDEWALKS DETAILS NO.2

ABBREVIATIONS

See Standard Plans A10A and A10B for additional Abbreviations.

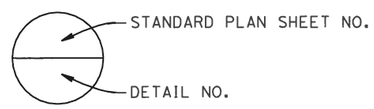

DESIGN OVERSIGHT
7/14/16
SIGN OFF DATE

	BY	CHECKED
DESIGN	E. Okada	M. Vargas
DETAILS	H. Paige	M. Vargas
QUANTITIES	E. Okada	M. Vargas

PREPARED FOR THE STATE OF CALIFORNIA DEPARTMENT OF TRANSPORTATION

Erik Okada
PROJECT ENGINEER

BRIDGE NO. NONE
POST MILES

UTILITY CULVERT EXTENSION
INDEX AND GENERAL NOTES

DESIGN DETAIL SHEET (ENGLISH) (REV. 03/14/12)

ORIGINAL SCALE IN INCHES FOR REDUCED PLANS 0 1 2 3

UNIT: 0000
PROJECT NUMBER & PHASE: 04140005521 CONTRACT NO.: 04-2J6804

DISREGARD PRINTS BEARING EARLIER REVISION DATES

REVISION DATES

SHEET 2 OF 4

FILE => 076-28-0100-a-itp.dgn

USERNAME => hu11 DATE PLOTTED => 7/14/2016 TIME PLOTTED => 10:26:52 AM

DIST	COUNTY	ROUTE	POST MILES TOTAL PROJECT	SHEET No	TOTAL SHEETS
04	CC/Mrn	580	5.0/7.8, 0.0/3.3	558	579

REGISTERED CIVIL ENGINEER 7/14/16 DATE

7/26/16
PLANS APPROVAL DATE

REGISTERED PROFESSIONAL ENGINEER E. OKADA No. 54415 Exp. 6-30-18 STRUCTURAL STATE OF CALIFORNIA

The State of California or its officers or agents shall not be responsible for the accuracy or completeness of scanned copies of this plan sheet.

HNTB CORPORATION
1111 BROADWAY
9TH FLOOR
OAKLAND, CA 94607

BAY AREA TOLL AUTHORITY
375 BEALE STREET, SUITE 800
SAN FRANCISCO, CA 94105

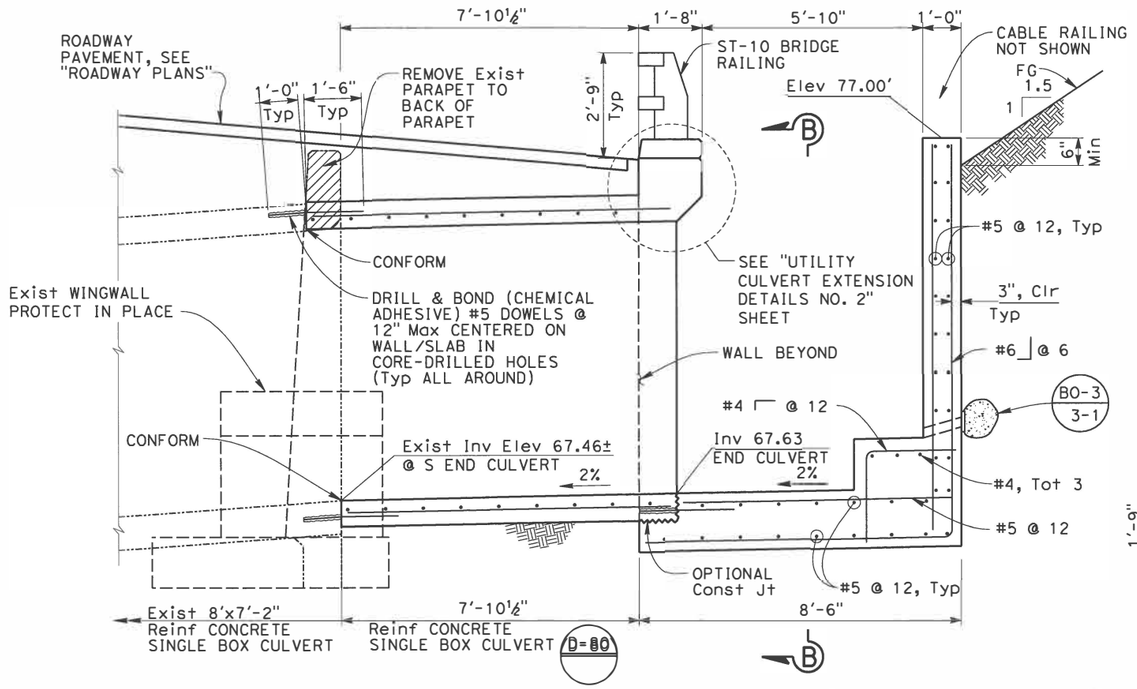

SECTION A-A

½"=1'-0"

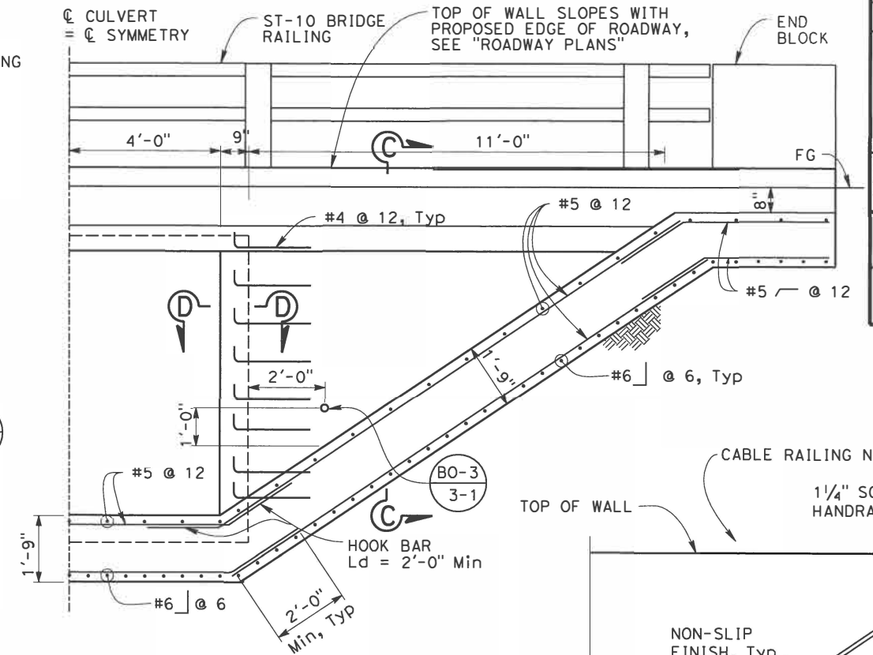

SECTION B-B

½"=1'-0"

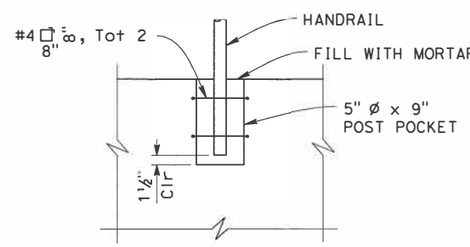

POST DETAIL

2"=1'-0"

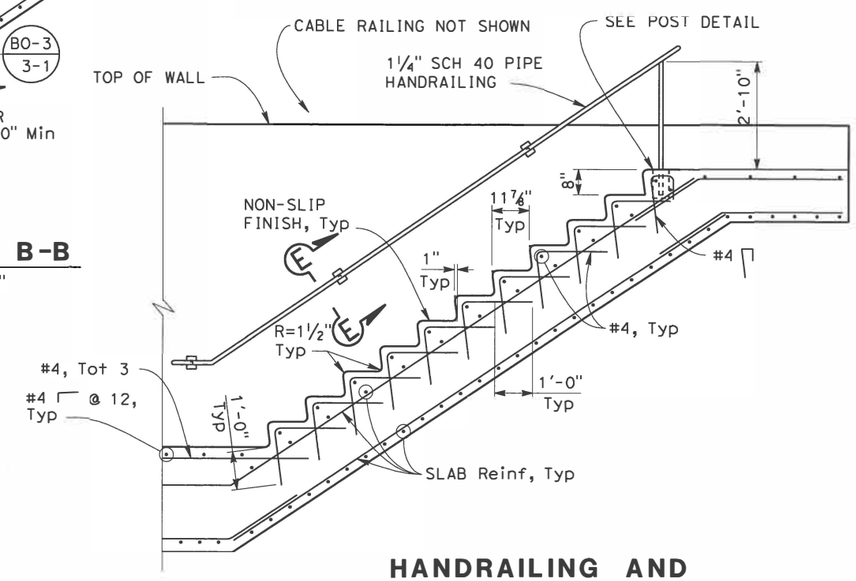

HANDRAILING AND STAIR ELEVATION

½"=1'-0"

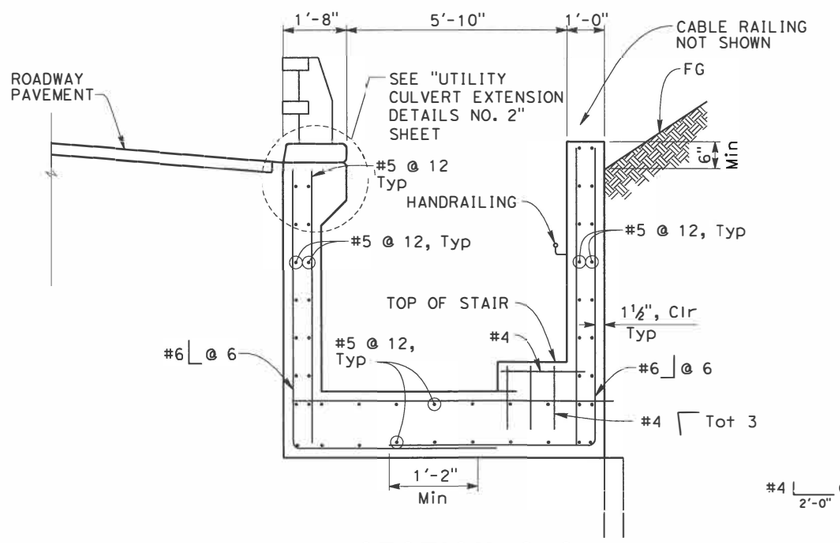

SECTION C-C

½"=1'-0"

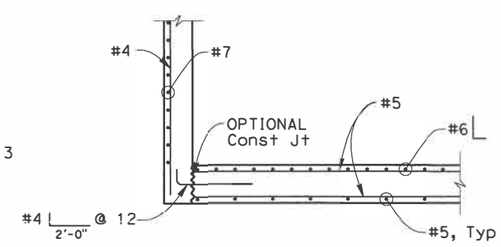

SECTION D-D

½"=1'-0"

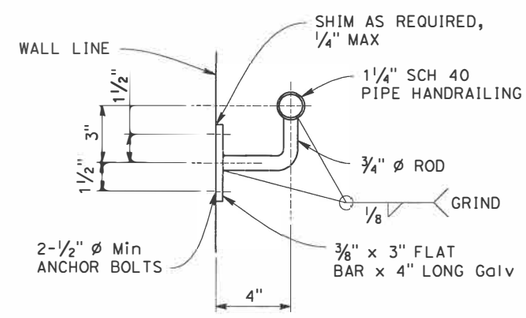

SECTION E-E

NO SCALE

LEGEND:

- DENOTES EXIST STRUCTURE
- DENOTES NEW STRUCTURE
- DENOTES LIMITS OF REMOVE CONCRETE STRUCTURE

DESIGN OVERSIGHT
7/14/16
SIGN OFF DATE

	BY	CHECKED
DESIGN	E. Okada	M. Vargas
DETAILS	H. Paige	M. Vargas
QUANTITIES	E. Okada	M. Vargas

PREPARED FOR THE STATE OF CALIFORNIA DEPARTMENT OF TRANSPORTATION

Erik Okada
PROJECT ENGINEER

BRIDGE NO. NONE
POST MILES -

UTILITY CULVERT EXTENSION DETAILS NO. 1

DESIGN DETAIL SHEET (ENGLISH) (REV. 03/14/12)

ORIGINAL SCALE IN INCHES FOR REDUCED PLANS 0 1 2 3

UNIT: 0000
PROJECT NUMBER & PHASE: 04140005521
CONTRACT NO.: 04-2J6804

DISREGARD PRINTS BEARING EARLIER REVISION DATES

REVISION DATES

SHEET 3 OF 4

FILE => 077-28-0100-c-sp02-D.dgn

USERNAME => hu111 DATE PLOTTED => 7/14/2016 TIME PLOTTED => 10:26:52 AM

DIST	COUNTY	ROUTE	POST MILES TOTAL PROJECT	SHEET No	TOTAL SHEETS
04	CC/Mrn	580	5.0/7.8, 0.0/3.3	559	579

REGISTERED CIVIL ENGINEER — DATE 7/14/16

7/26/16
PLANS APPROVAL DATE

REGISTERED PROFESSIONAL ENGINEER — E. OKADA — No. S4415 — Exp. 6-30-18 — STRUCTURAL — STATE OF CALIFORNIA

The State of California or its officers or agents shall not be responsible for the accuracy or completeness of scanned copies of this plan sheet.

HNTB CORPORATION
1111 BROADWAY
9TH FLOOR
OAKLAND, CA 94607

BAY AREA TOLL AUTHORITY
375 BEALE STREET, SUITE 800
SAN FRANCISCO, CA 94105

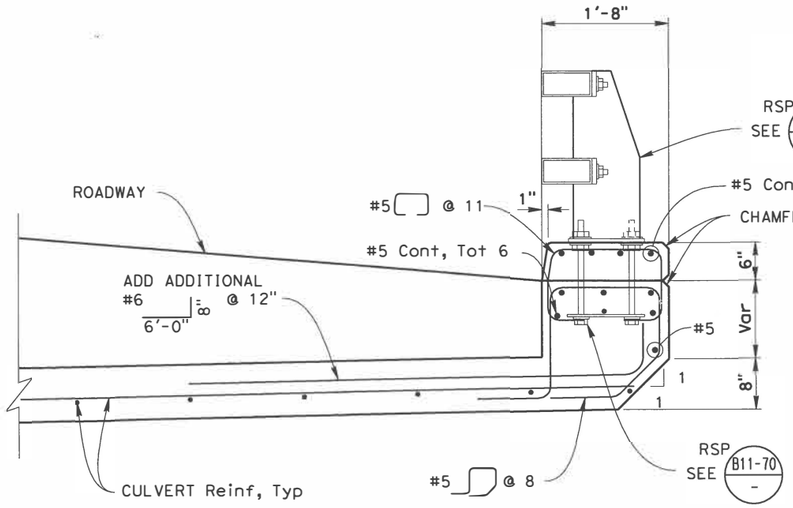

CULVERT DETAIL

1"=1'-0"

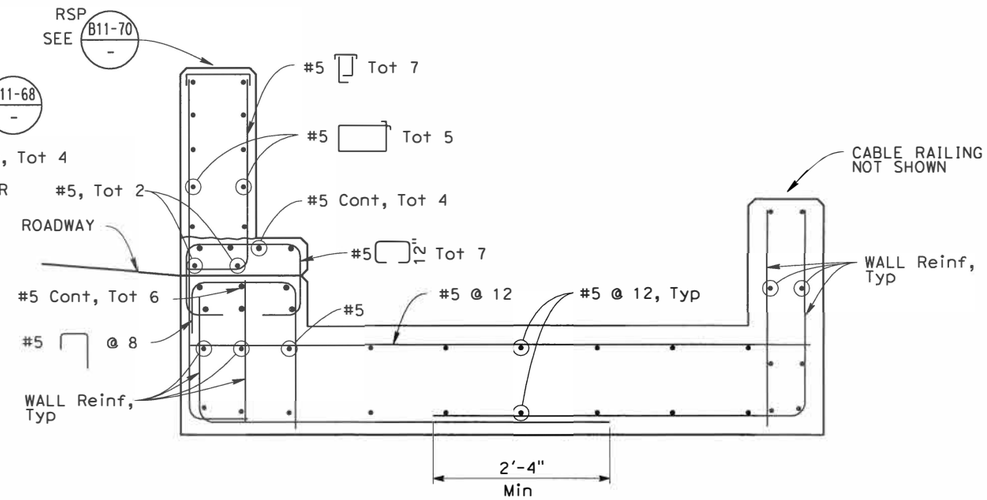

END BLOCK DETAIL

1"=1'-0"

NOTES:

1. For additional guardrail details, see "ROADWAY PLANS".
2. Contractor shall verify all controlling field dimensions before ordering or fabricating any material.

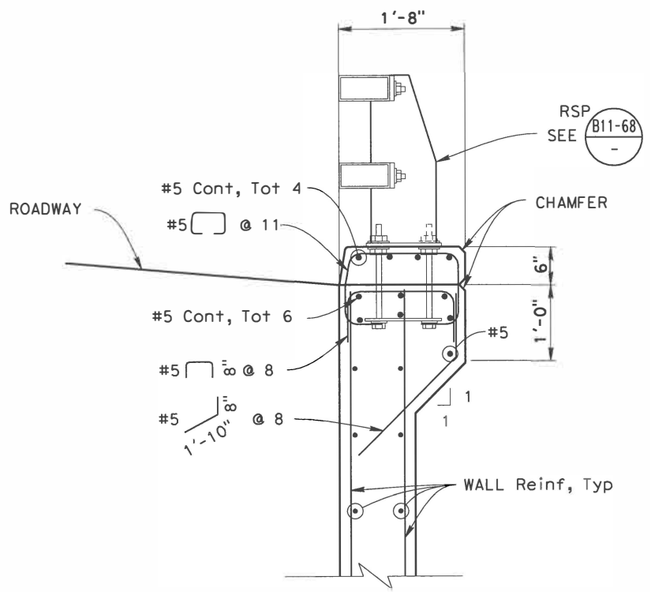

WINGWALL DETAIL

1"=1'-0"

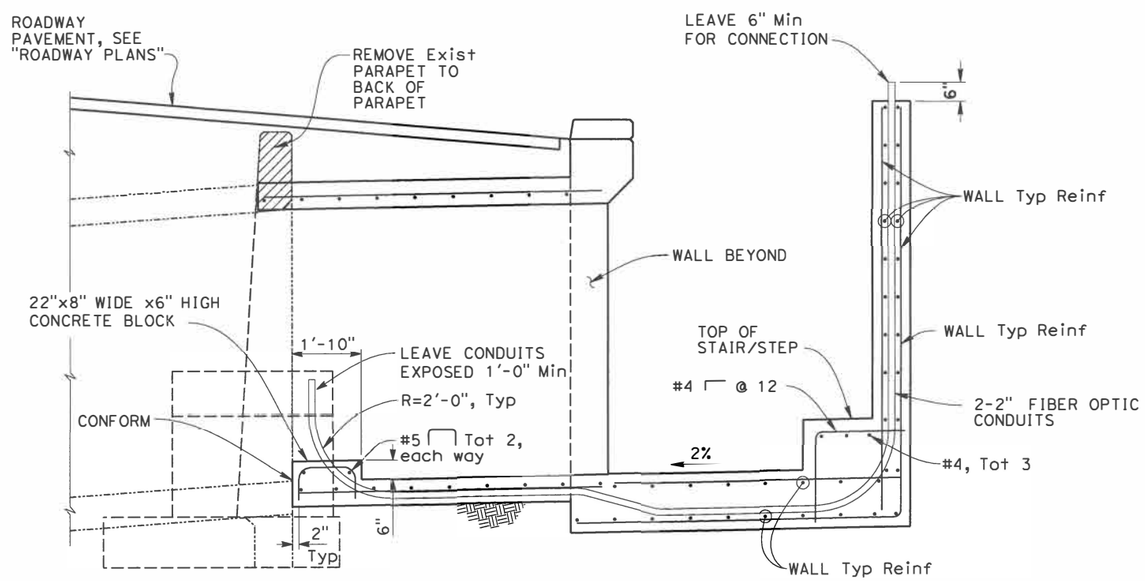

DETAILS AT CONDUIT

NO SCALE

DESIGN OVERSIGHT — 7/14/16 — SIGN OFF DATE

	BY	CHECKED
DESIGN	G. Iwamoto	M. Vargas
DETAILS	H. Li	M. Vargas
QUANTITIES	E. Okada	M. Vargas

PREPARED FOR THE STATE OF CALIFORNIA DEPARTMENT OF TRANSPORTATION

Erik Okada — PROJECT ENGINEER

BRIDGE NO. NONE — POST MILES -

UTILITY CULVERT EXTENSION
DETAILS NO. 2

DESIGN DETAIL SHEET (ENGLISH) (REV. 03/14/12)

ORIGINAL SCALE IN INCHES FOR REDUCED PLANS 0 1 2 3

UNIT: 0000
PROJECT NUMBER & PHASE: 04140005521 CONTRACT NO.: 04-2J6804

DISREGARD PRINTS BEARING EARLIER REVISION DATES

REVISION DATES

SHEET 4 OF 4

FILE => 078-28-0100-c-sp03.dgn

USERNAME => null

DATE PLOTTED => 7/14/2016 TIME PLOTTED => 10:26:53 AM

DIST	COUNTY	ROUTE	POST MILES TOTAL PROJECT	SHEET No	TOTAL SHEETS
04	CC/Mrn	580	5.0/7.8 0.0/3.3	560	579

REGISTERED CIVIL ENGINEER — DATE 7/14/16

7/26/16
PLANS APPROVAL DATE

REGISTERED PROFESSIONAL ENGINEER — E. OKADA — No. S4415 — Exp. 6-30-18 — STRUCTURAL — STATE OF CALIFORNIA

The State of California or its officers or agents shall not be responsible for the accuracy or completeness of scanned copies of this plan sheet.

HNTB CORPORATION
1111 BROADWAY, 9TH FLOOR
OAKLAND, CA 94607

BAY AREA TOLL AUTHORITY
375 BEALE STREET, SUITE 800
SAN FRANCISCO, CA 94105

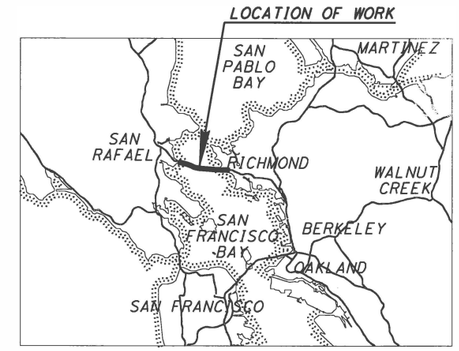

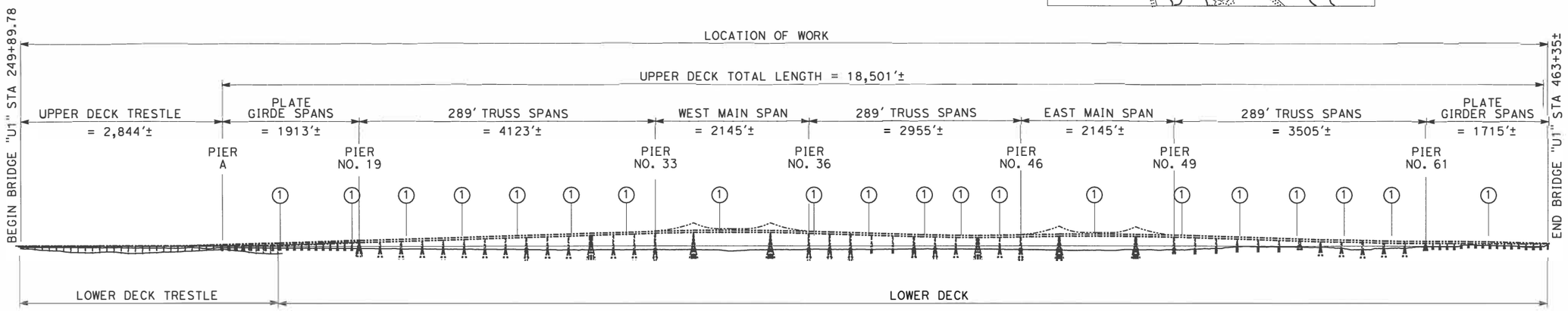

ELEVATION

1" = 800'-0"

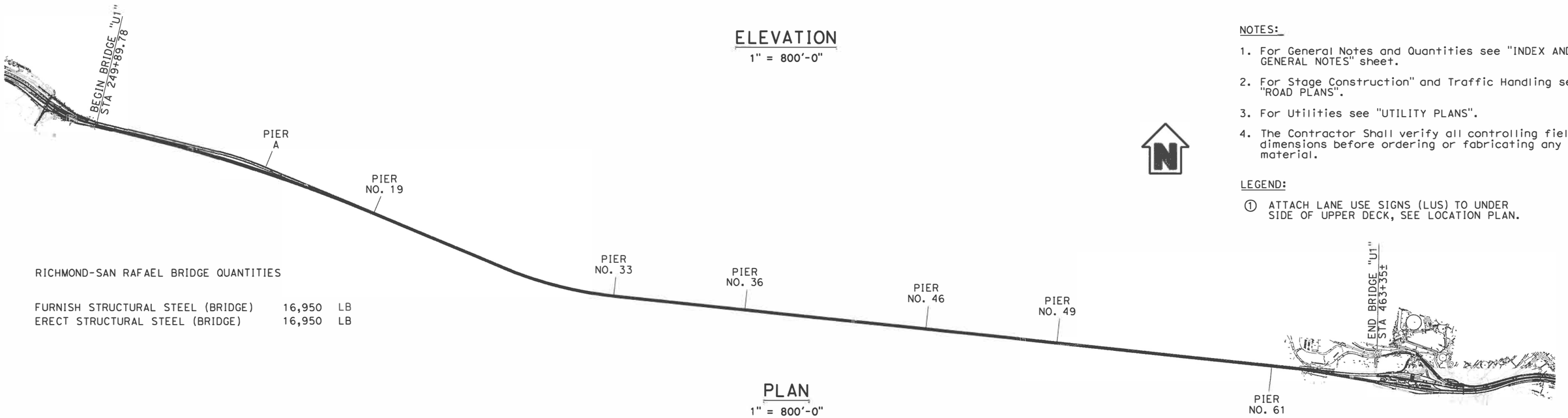

PLAN

1" = 800'-0"

NOTES:

1. For General Notes and Quantities see "INDEX AND GENERAL NOTES" sheet.
2. For Stage Construction" and Traffic Handling see "ROAD PLANS".
3. For Utilities see "UTILITY PLANS".
4. The Contractor Shall verify all controlling field dimensions before ordering or fabricating any material.

LEGEND:

① ATTACH LANE USE SIGNS (LUS) TO UNDER SIDE OF UPPER DECK, SEE LOCATION PLAN.

RICHMOND-SAN RAFAEL BRIDGE QUANTITIES

FURNISH STRUCTURAL STEEL (BRIDGE)	16,950	LB
ERECT STRUCTURAL STEEL (BRIDGE)	16,950	LB

DESIGN OVERSIGHT — 7/14/16 SIGN OFF DATE

	BY	CHECKED		
DESIGN	K. Kelly-Sneed	M. Vargas	LOAD & RESISTANCE FACTOR DESIGN	LIVE LOADING: HS20-44 AND ALTERNATIVE AND PERMIT DESIGN VEHICLE
DETAILS	H. Paige	K. Kelly-Sneed	LAYOUT: H. Li	CHECKED: M. Vargas
QUANTITIES	K. Kelly-Sneed	M. Vargas	SPECIFICATIONS: D. Desai	PLANS AND SPECS COMPARED: E. Okada

DESIGN GENERAL PLAN SHEET (ENGLISH) (REV. 06-01-09)

ORIGINAL SCALE IN INCHES FOR REDUCED PLANS 0 1 2 3

PREPARED FOR THE STATE OF CALIFORNIA DEPARTMENT OF TRANSPORTATION

E. Okada — PROJECT ENGINEER

CU 04
EA 04-2J6804

BRIDGE NO. 28-0100
POST MILES 6.22

RICHMOND-SAN RAFAEL BRIDGE (MODIFY)
GENERAL PLAN

DISREGARD PRINTS BEARING EARLIER REVISION DATES

REVISION DATES (PRELIMINARY STAGE ONLY) --/--/15

SHEET 1 OF 8

FILE => 080-28-0100r-a-gp.dgn

USERNAME => hnu111 DATE PLOTTED => 7/14/2016 TIME PLOTTED => 10:26:57 AM

DIST	COUNTY	ROUTE	POST MILES TOTAL PROJECT	SHEET No	TOTAL SHEETS
04	CC/Mrn	580	5.0/7.8, 0.0/3.3	561	579

REGISTERED CIVIL ENGINEER — DATE 7/14/16

PLANS APPROVAL DATE 7/26/16

REGISTERED PROFESSIONAL ENGINEER — E. OKADA — No. S4415 — Exp. 6-30-18 — STRUCTURAL — STATE OF CALIFORNIA

The State of California or its officers or agents shall not be responsible for the accuracy or completeness of scanned copies of this plan sheet.

HNTB CORPORATION
1111 BROADWAY
9TH FLOOR
OAKLAND, CA 94607

BAY AREA TOLL AUTHORITY
375 BEALE STREET, SUITE 800
SAN FRANCISCO, CA 94105

INDEX OF DRAWINGS

SHEET No.	DESCRIPTION
1	GENERAL PLAN
2	INDEX AND GENERAL NOTES
3	SIGN MOUNTING DETAILS NO. 1
4	SIGN MOUNTING DETAILS NO. 2
5	SIGN MOUNTING DETAILS NO. 3
6	LOCATION PLAN
7	MISCELLANEOUS ELECTRICAL CONNECTION DETAILS 1
8	MISCELLANEOUS ELECTRICAL CONNECTION DETAILS 2

CALTRANS STANDARD PLANS DATED 2010

	A10A	ABBREVIATIONS (SHEETS 1 OF 2)
RSP	A10B	ABBREVIATIONS (SHEETS 2 OF 2)
	A10C	LINES AND SYMBOLS (SHEETS 1 OF 3)
	A10D	LINES AND SYMBOLS (SHEETS 2 OF 3)
	A10E	LINES AND SYMBOLS (SHEETS 3 OF 3)
RSP	ES-7M	ELECTRICAL SYSTEMS (SIGNAL AND LIGHTING STANDARD DETAILS NO. 1)
RSP	ES-16B	ELECTRICAL SYSTEMS (CLOSED CIRCUIT TELEVISION, 25' TO 45' POLE)
RSP	ES-16C	ELECTRICAL SYSTEMS (CLOSED CIRCUIT TELEVISION, 50' TO 90' HIGH MAST POLE)
RSP	ES-7R	ELECTRICAL SYSTEMS (SIGNAL AND LIGHTING MISCELLANEOUS ATTACHMENT)

GENERAL NOTES
LOAD AND RESISTANCE FACTOR DESIGN

DESIGN:
Standard Specifications for structural supports of highway signs, luminaires, and traffic signals. 6th Edition 2013.

SEISMIC DESIGN:
Caltrans Seismic Design Criteria (SDC), Version 1.6 dated 2010

WIND LOAD:
Base Wind Velocity, V_b = 100 MPH
Structure Height, Z > 30 FT

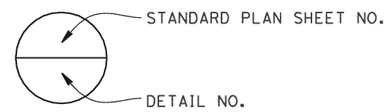

ABBREVIATIONS

SEE "STANDARD PLANS", "A10A", AND "A10B" FOR ADDITIONAL ABBREVIATIONS.

STRUCTURE STEEL

STEEL PLATES, SHAPES AND BARS: ASTM A709

FASTENERS

BOLTS:	ASTM A307
U-BOLTS, NUTS, WASHERS:	ASTM A304
ANCHOR BOLTS:	ASTM F1554
NUTS:	ASTM A503
WASHERS:	ASTM F844

WELDING

WELDING SHALL BE PER AWS D1.5

DESIGN OVERSIGHT
7/14/16
SIGN OFF DATE

	BY	CHECKED
DESIGN	K. Kelly-Sneed	M. Vargas
DETAILS	H. Li	M. Vargas
QUANTITIES	K. Kelly-Sneed	M. Vargas

PREPARED FOR THE STATE OF CALIFORNIA DEPARTMENT OF TRANSPORTATION

Erik Okada
PROJECT ENGINEER

BRIDGE NO. 28-0100
POST MILES 6.22

RICHMOND - SAN RAFAEL BRIDGE (MODIFY)
INDEX AND GENERAL NOTES

DESIGN DETAIL SHEET (ENGLISH) (REV. 03/14/12)

ORIGINAL SCALE IN INCHES FOR REDUCED PLANS 0 1 2 3

UNIT: 0000
PROJECT NUMBER & PHASE: 04140005521
CONTRACT NO.: 04-2J6804

DISREGARD PRINTS BEARING EARLIER REVISION DATES

REVISION DATES: X

SHEET 2 OF 8

FILE => 081-28-0100-b-gnote.dgn

USERNAME => null DATE PLOTTED => 7/14/2016 TIME PLOTTED => 10:27:00 AM

DIST	COUNTY	ROUTE	POST MILES TOTAL PROJECT	SHEET No	TOTAL SHEETS
04	CC/Mrn	580	5.0/7.8, 0.0/3.3	562	579

REGISTERED CIVIL ENGINEER — DATE 7/14/16

PLANS APPROVAL DATE 7/26/16

REGISTERED PROFESSIONAL ENGINEER — E. OKADA — No. S4415 — Exp. 6-30-18 — STRUCTURAL — STATE OF CALIFORNIA

The State of California or its officers or agents shall not be responsible for the accuracy or completeness of scanned copies of this plan sheet.

HNTB CORPORATION
1111 BROADWAY
9TH FLOOR
OAKLAND, CA 94607

BAY AREA TOLL AUTHORITY
375 BEALE STREET, SUITE 800
SAN FRANCISCO, CA 94105

NOTES:

1. The Contractor shall verify all controlling field dimensions before ordering or fabricating any material.
2. Coordinate LUS Sign wiring and manufacturer requirements.
3. LINDAPTER HSR beam clamp Type AF or equal.

LEGEND:

EXISTING STRUCTURE

NEW CONSTRUCTION

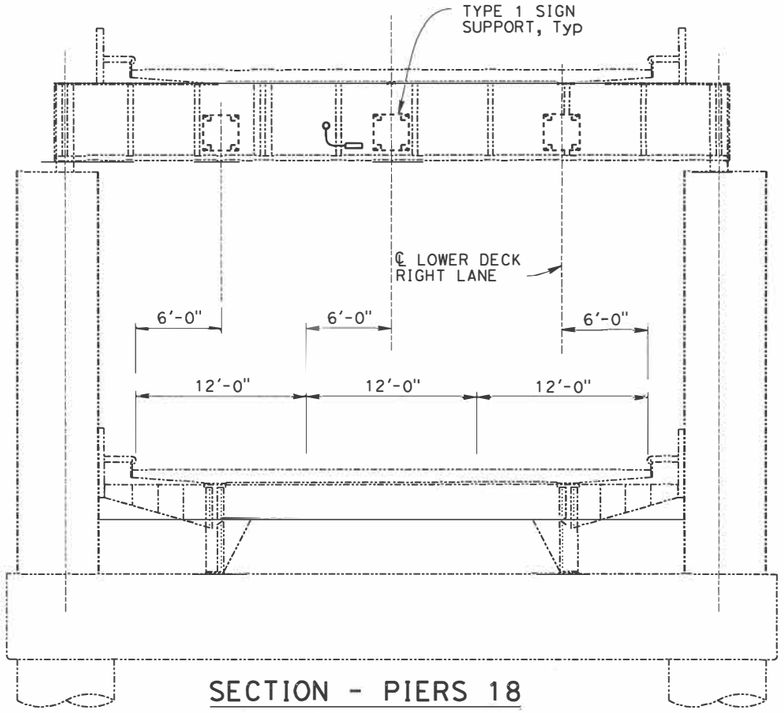

SECTION - PIERS 18

3/16" = 1'-0"

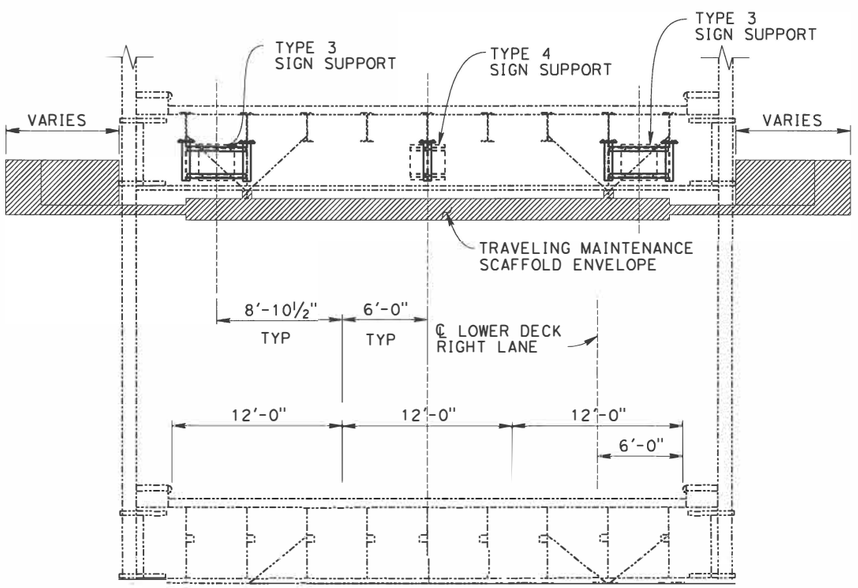

TYPICAL SECTION - 289' TRUSS & MAIN SPANS

3/16" = 1'-0"

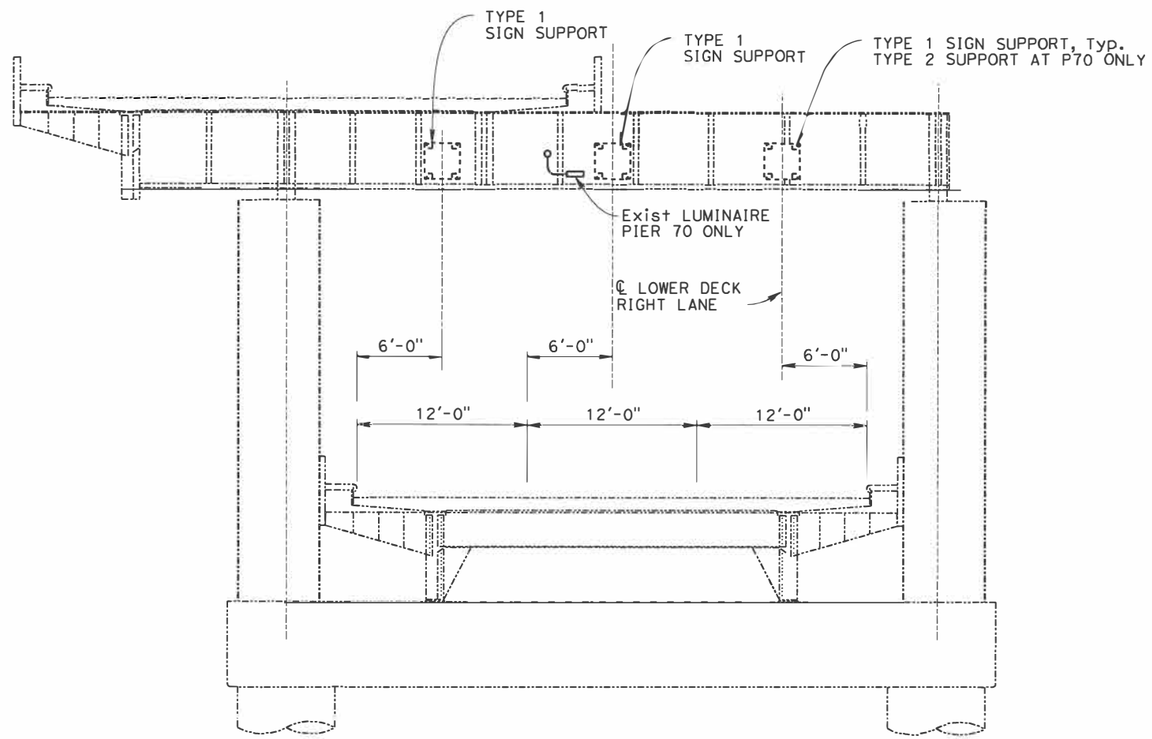

SECTION - PIERS 8 AND 70

3/16" = 1'-0"

DESIGN OVERSIGHT — SIGN OFF DATE 7/14/16

	BY	CHECKED
DESIGN	M. Vargas	K. Kelly-Sneed
DETAILS	H. Paige	M. Vargas
QUANTITIES	M. Vargas	K. Kelly-Sneed

PREPARED FOR THE STATE OF CALIFORNIA DEPARTMENT OF TRANSPORTATION

Erik Okada — PROJECT ENGINEER

BRIDGE NO. 28-0100 — POST MILES 6.23

RICHMOND-SAN RAFAEL BRIDGE (MODIFY)
SIGN MOUNTING DETAILS NO. 1

DESIGN DETAIL SHEET (ENGLISH) (REV. 03/14/12)

ORIGINAL SCALE IN INCHES FOR REDUCED PLANS 0 1 2 3

UNIT: 0000
PROJECT NUMBER & PHASE: 04140005521 CONTRACT NO.: 04-2J6804

DISREGARD PRINTS BEARING EARLIER REVISION DATES — REVISION DATES

SHEET 3 OF 8

FILE => 082-28-0100-u-miscdt-001.dgn

USERNAME => $USER$ DATE PLOTTED => $DATE$ TIME PLOTTED => $TIME$

DIST	COUNTY	ROUTE	POST MILES TOTAL PROJECT	SHEET No	TOTAL SHEETS
04	CC/Mrn	580	5.0/7.8, 0.0/3.3	563	579

REGISTERED CIVIL ENGINEER 7/14/16 DATE

7/26/16
PLANS APPROVAL DATE

REGISTERED PROFESSIONAL ENGINEER E. OKADA No. S4415 Exp. 6-30-18 STRUCTURAL STATE OF CALIFORNIA

The State of California or its officers or agents shall not be responsible for the accuracy or completeness of scanned copies of this plan sheet.

HNTB CORPORATION
1111 BROADWAY
9TH FLOOR
OAKLAND, CA 94607

BAY AREA TOLL AUTHORITY
375 BEALE STREET, SUITE 800
SAN FRANCISCO, CA 94105

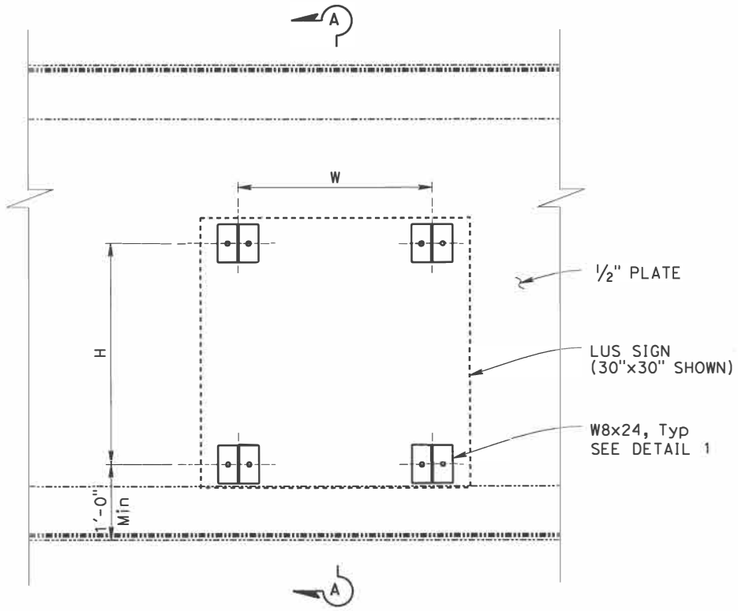

TYPE 1 AND TYPE 2 SIGN SUPPORT

1" = 1'-0"

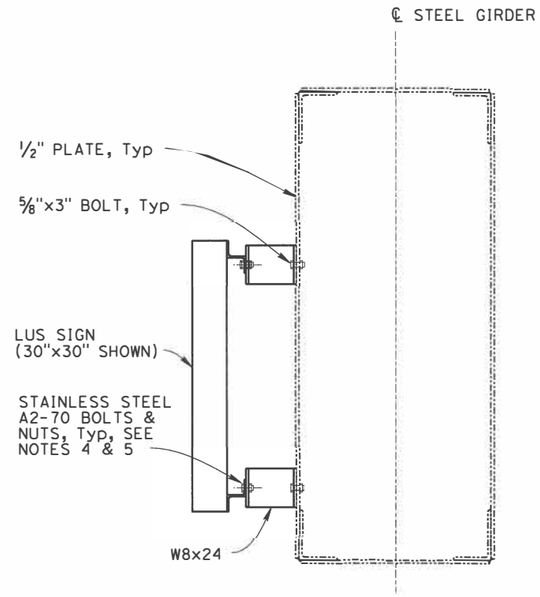

SECTION A-A

1" = 1'-0"

LUS SIGN INSTALLATION SCHEDULE

TYPE	SIZE	H*	W
TYPE 1	2.5x2.5	21.62	20.00
TYPE 2	3.8x3.5	34.95	30.68

* SEE NOTE 5

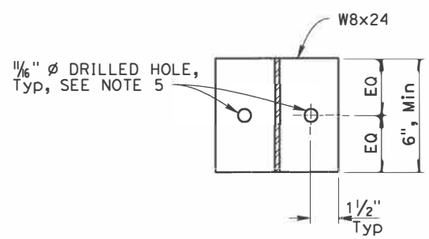

DETAIL 1

3" = 1'-0"

NOTES:

1. The Contractor shall verify all controlling field dimensions before ordering or fabricating any material.
2. Coordinate LUS Sign wiring and mounting per sign manufacturer requirements.
3. Install non-metallic isolation washers between dissimilar metals.
4. Bolts and nuts connecting LUS Sign to Sign Support shall be stainless steel grade A2-70 or as recommended per LUS Sign manufacturer.
5. Detail shows size and location of drilled holes for steel girder side only. Contractor to coordinate with sign manufacturer for drill location and size of holes.
6. All structural steel to be hot dipped galvanized.

LEGEND:

EXISTING STRUCTURE
NEW CONSTRUCTION

DESIGN OVERSIGHT
7/14/16
SIGN OFF DATE

	BY	CHECKED
DESIGN	M. Vargas	K. Kelly-Sneed
DETAILS	H. Li	M. Vargas
QUANTITIES	M. Vargas	K. Kelly-Sneed

PREPARED FOR THE STATE OF CALIFORNIA DEPARTMENT OF TRANSPORTATION

Erik Okada
PROJECT ENGINEER

BRIDGE NO. 28-0100
POST MILE 6.22

RICHMOND-SAN RAFAEL BRIDGE (MODIFY)
SIGN MOUNTING DETAILS NO. 2

DESIGN DETAIL SHEET (ENGLISH) (REV. 06-01-09)

ORIGINAL SCALE IN INCHES FOR REDUCED PLANS 0 1 2 3

UNIT: 0000
PROJECT NUMBER & PHASE: 04150004021 CONTRACT NO.: 04-4J7104

DISREGARD PRINTS BEARING EARLIER REVISION DATES

REVISION DATES

SHEET 4 OF 8

FILE => 083-28-0100-u-miscdt-002.dgn

USERNAME => hulll DATE PLOTTED => 7/14/2016 TIME PLOTTED => 10:27:01 AM

DIST	COUNTY	ROUTE	POST MILES TOTAL PROJECT	SHEET No	TOTAL SHEETS
04	CC/Mrn	580	5.0/7.8, 0.0/3.3	564	579

REGISTERED CIVIL ENGINEER 7/14/16 DATE

7/26/16
PLANS APPROVAL DATE

REGISTERED PROFESSIONAL ENGINEER E. OKADA No. S4415 Exp. 6-30-18 STRUCTURAL STATE OF CALIFORNIA

The State of California or its officers or agents shall not be responsible for the accuracy or completeness of scanned copies of this plan sheet.

HNTB CORPORATION
1111 BROADWAY
9TH FLOOR
OAKLAND, CA 94607

BAY AREA TOLL AUTHORITY
375 BEALE STREET, SUITE 800
SAN FRANCISCO, CA 94105

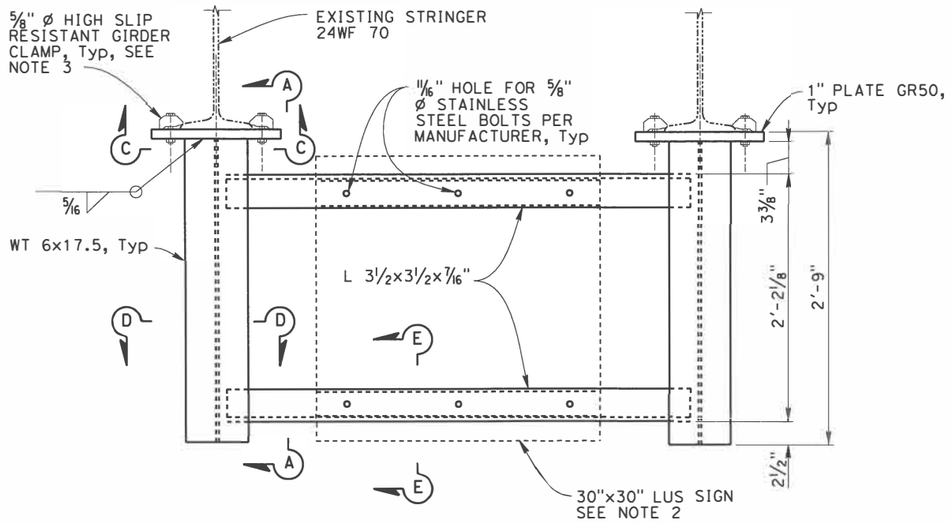

TYPE 3 SIGN SUPPORT

1½" = 1'-0"

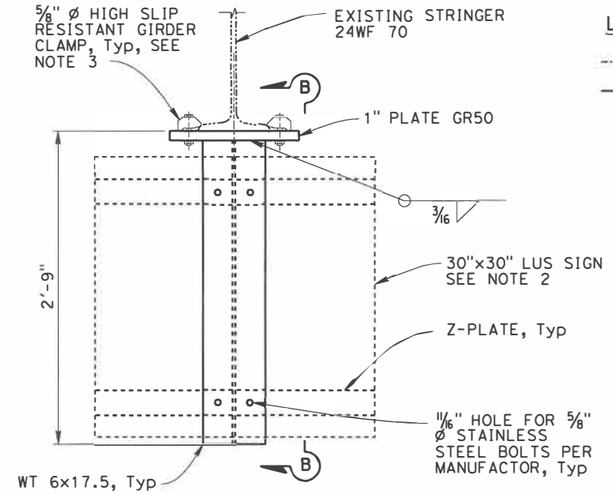

TYPE 4 SIGN SUPPORT

1½" = 1'-0"

LEGEND:

EXISTING STRUCTURE

NEW CONSTRUCTION

NOTES:

1. The Contractor shall verify all controlling field dimensions before ordering or fabricating any material.
2. Coordinate LUS Sign wiring and mounting per sign manufacturer requirements.
3. High slip resistant girder clamp similar to LINDAPTER HSR beam clamp Type AAF or equal.
4. Bolts and nuts connecting LUS Sign to Sign Support shall be stainless steel grade A2-70 or as recommended per LUS Sign manufacturer.
5. Detail shows size and location of drilled holes for steel girder side only. Contractor to coordinate with sign manufacturer for drill location and size of holes.
6. All structural steel to be hot dipped galvanized.
7. Install non-metallic isolation washers between dissimilar metals.

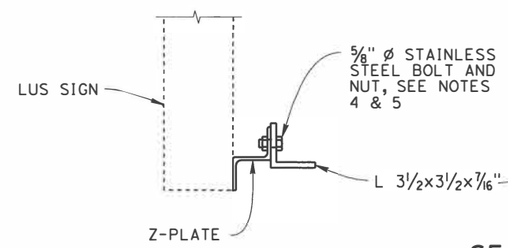

SECTION E-E

2" = 1'-0"

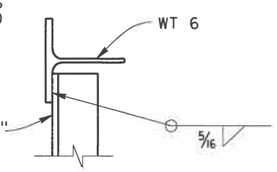

SECTION D-D

2" = 1'-0"

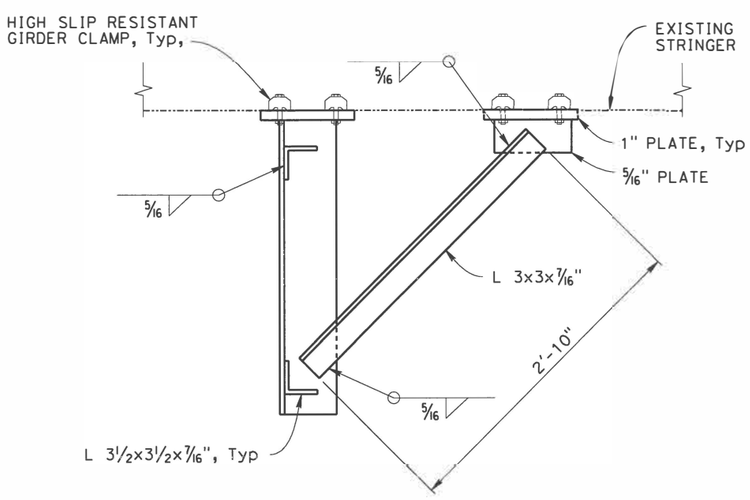

SECTION A-A

1½" = 1'-0"

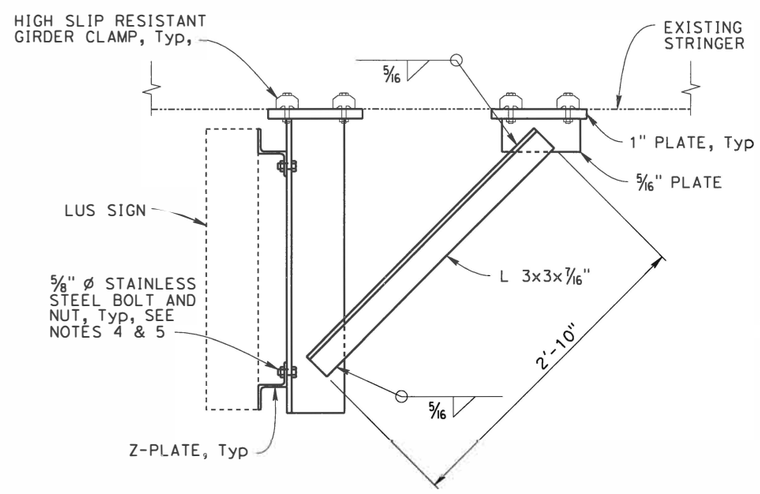

SECTION B-B

1½" = 1'-0"

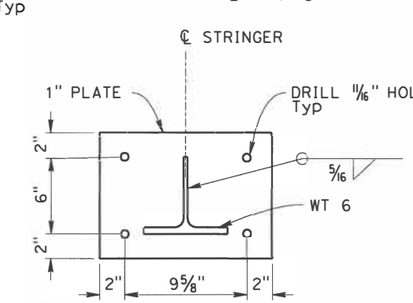

SECTION C-C

2" = 1'-0"

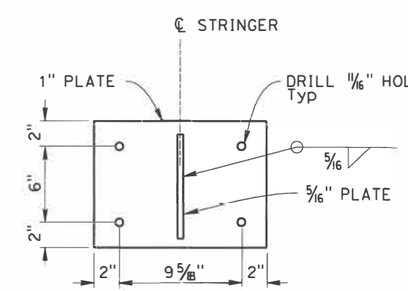

DETAIL 1

2" = 1'-0"

DESIGN OVERSIGHT 7/14/16 SIGN OFF DATE	DESIGN	BY M. Vargas	CHECKED K. Kelly-Sneed
	DETAILS	BY H. Li	CHECKED M. Vargas
	QUANTITIES	BY M. Vargas	CHECKED K. Kelly-Sneed

PREPARED FOR THE STATE OF CALIFORNIA DEPARTMENT OF TRANSPORTATION

Erik Okada
PROJECT ENGINEER

BRIDGE NO. 28-0100
POST MILE 6.22

RICHMOND-SAN RAFAEL BRIDGE (MODIFY)
SIGN MOUNTING DETAILS NO. 3

DESIGN DETAIL SHEET (ENGLISH) (REV. 06-01-09)

ORIGINAL SCALE IN INCHES FOR REDUCED PLANS 0 1 2 3

UNIT: 0000
PROJECT NUMBER & PHASE: 04140005521 CONTRACT NO.: 04-2J6804

DISREGARD PRINTS BEARING EARLIER REVISION DATES

REVISION DATES

SHEET 5 OF 8

FILE => 084-28-0100-u-miscdt-003.dgn

USERNAME => mulli DATE PLOTTED => 7/14/2016 TIME PLOTTED => 10:27:02 AM

DIST	COUNTY	ROUTE	POST MILES TOTAL PROJECT	SHEET No	TOTAL SHEETS
04	CC/Mrn	580	5.0/7.8, 0.0/3.3	565	579

REGISTERED CIVIL ENGINEER 7/14/16 DATE

7/26/16
PLANS APPROVAL DATE

REGISTERED PROFESSIONAL ENGINEER E. OKADA No. S4415 Exp. 6-30-18 STRUCTURAL STATE OF CALIFORNIA

The State of California or its officers or agents shall not be responsible for the accuracy or completeness of scanned copies of this plan sheet.

HNTB CORPORATION
1111 BROADWAY
9TH FLOOR
OAKLAND, CA 94607

BAY AREA TOLL AUTHORITY
375 BEALE STREET, SUITE 800
SAN FRANCISCO, CA 94105

NOTES:

1 The Contractor shall verify all controlling field dimensions before ordering or fabricating any material.

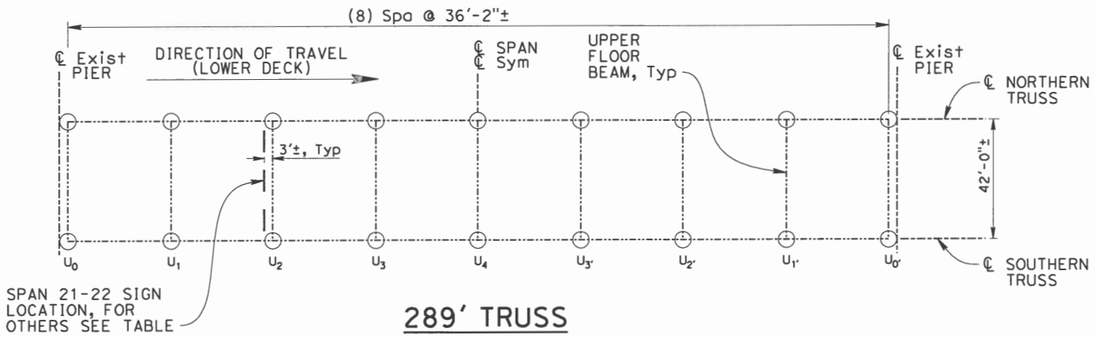

289' TRUSS

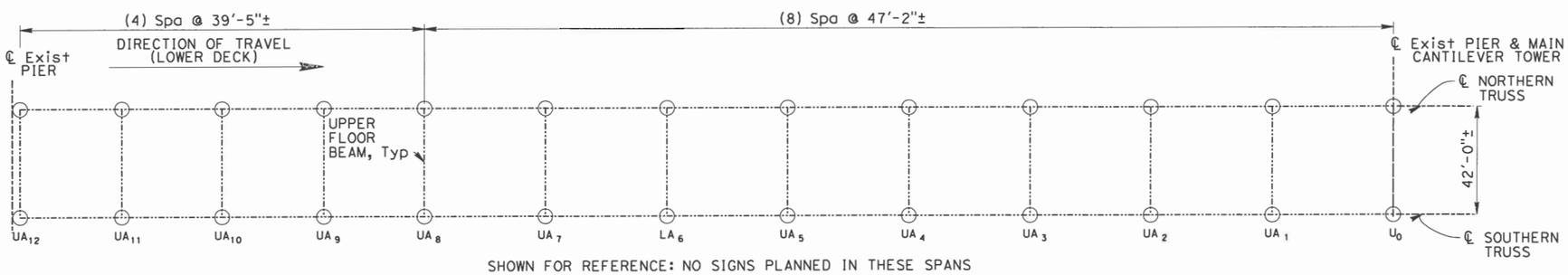

SHOWN FOR REFERENCE: NO SIGNS PLANNED IN THESE SPANS

MAIN SPANS - ANCHOR ARM TRUSS

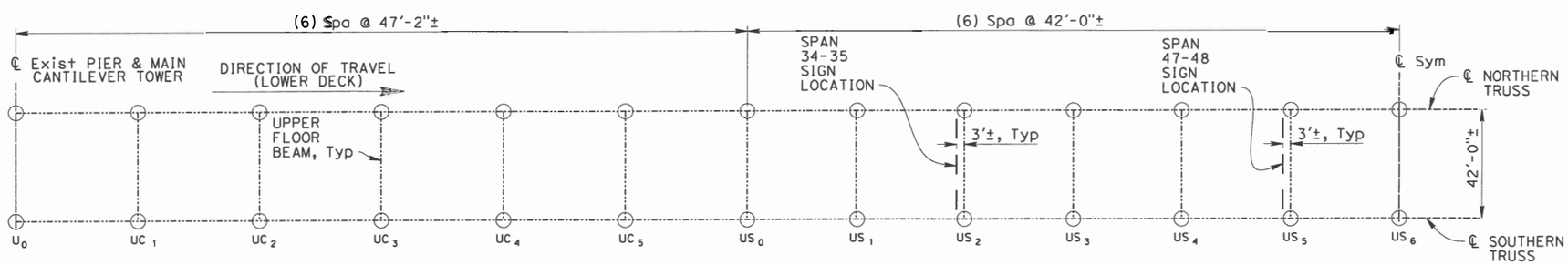

MAIN SPANS - CANTILEVER ARM & SUSPENDED SPAN TRUSS

LUS SIGN SUPPORT LOCATION SCHEDULE			
"U1" STA ±	"SPAN LOCATION"	ADJACENT FLOOR BEAM	STRINGER TYPE
286+44	FACE OF PIER 8	--	--
296+44	FACE OF PIER 18	--	--
304+00	SPAN 21-22	U2	24WF 70
311+64	SPAN 23-24	U1'	24WF 70
319+32	SPAN 26-27	U4	24WF 70
327+02	SPAN 29-30	U1	24WF 70
334+63	SPAN 31-32	U3'	24WF 70
347+71	SPAN 34-35	US2	27WF 94
360+86	SPAN 36-37	U2	24WF 70
368+50	SPAN 38-39	U1'	24WF 70
376+18	SPAN 41-42	U4	24WF 70
381+30	SPAN 43-44	U2	24WF 70
386+72	SPAN 44E-45	U0'	24WF 70
399+97	SPAN 47-48	US5	27WF 94
412+22	SPAN 49-50	U3	24WF 70
420+26	SPAN 52-53	U1	24WF 70
428+26	SPAN 54-55	U1'	24WF 70
434+86	SPAN 57-58	U1	24WF 70
441+44	SPAN 59-60	U3	24WF 70
455+17	FACE OF PIER 70	--	--

LEGEND:

EXISTING STRUCTURE

NEW CONSTRUCTION

KEY PLAN UPPER FLOOR BEAMS

NO SCALE

DESIGN OVERSIGHT
7/14/16
SIGN OFF DATE

	BY	CHECKED
DESIGN	K. Kelly-Sneed	M. Vargas
DETAILS	H. Paige	K. Kelly-Sneed
QUANTITIES	M. Vargas	K. Kelly-Sneed

PREPARED FOR THE STATE OF CALIFORNIA DEPARTMENT OF TRANSPORTATION

Erik Okada
PROJECT ENGINEER

BRIDGE NO. 28E-0100
POST MILES 6.00

RICHMOND-SAN RAFAEL BRIDGE (MODIFY)
LOCATION PLAN

DESIGN DETAIL SHEET (ENGLISH) (REV. 03/14/12)

ORIGINAL SCALE IN INCHES FOR REDUCED PLANS 0 1 2 3

UNIT: 0000
PROJECT NUMBER & PHASE: 04140005521 CONTRACT NO.: 04-2J6804

DISREGARD PRINTS BEARING EARLIER REVISION DATES

REVISION DATES

SHEET 6 OF 8

FILE => 085-28-0100-u-miscdt-004.dgn

USERNAME => $USER$ DATE PLOTTED => $DATE$ TIME PLOTTED => $TIME$

DIST	COUNTY	ROUTE	POST MILES TOTAL PROJECT	SHEET No	TOTAL SHEETS
04	CC/Mrn	580	5.0/7.8, 0.0/3.3	566	579

REGISTERED CIVIL ENGINEER 7/14/16 DATE

7/26/16
PLANS APPROVAL DATE

REGISTERED PROFESSIONAL ENGINEER E. OKADA No. S4415 Exp. 6-30-18 STRUCTURAL STATE OF CALIFORNIA

The State of California or its officers or agents shall not be responsible for the accuracy or completeness of scanned copies of this plan sheet.

HNTB CORPORATION
1111 BROADWAY
9TH FLOOR
OAKLAND, CA 94607

BAY AREA TOLL AUTHORITY
375 BEALE STREET, SUITE 800
SAN FRANCISCO, CA 94105

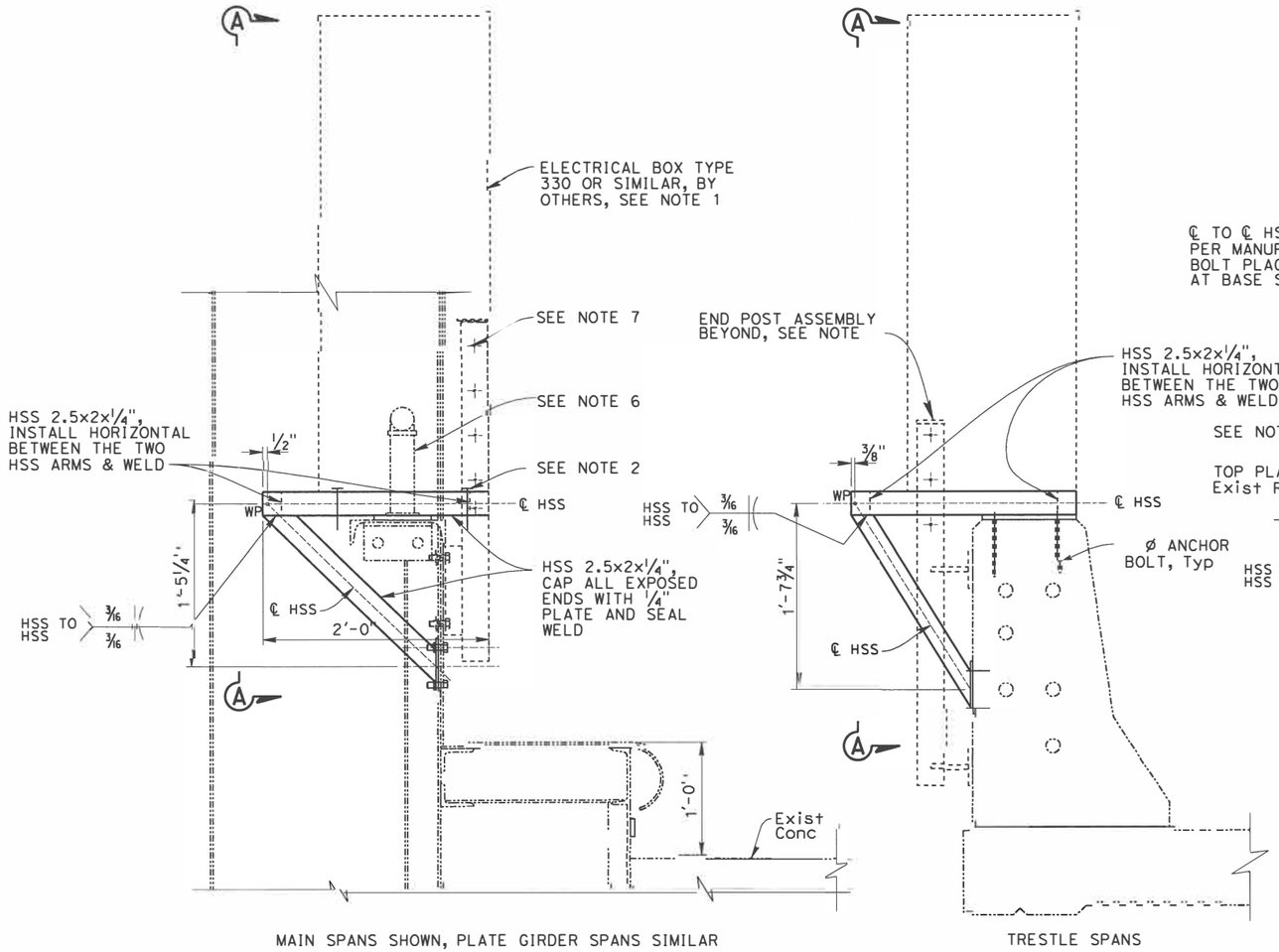

MAIN SPANS SHOWN, PLATE GIRDER SPANS SIMILAR

TRESTLE SPANS

BASE-MOUNT ELECTRICAL CABINET CONNECTION DETAIL

1 1/2" = 1'-0"

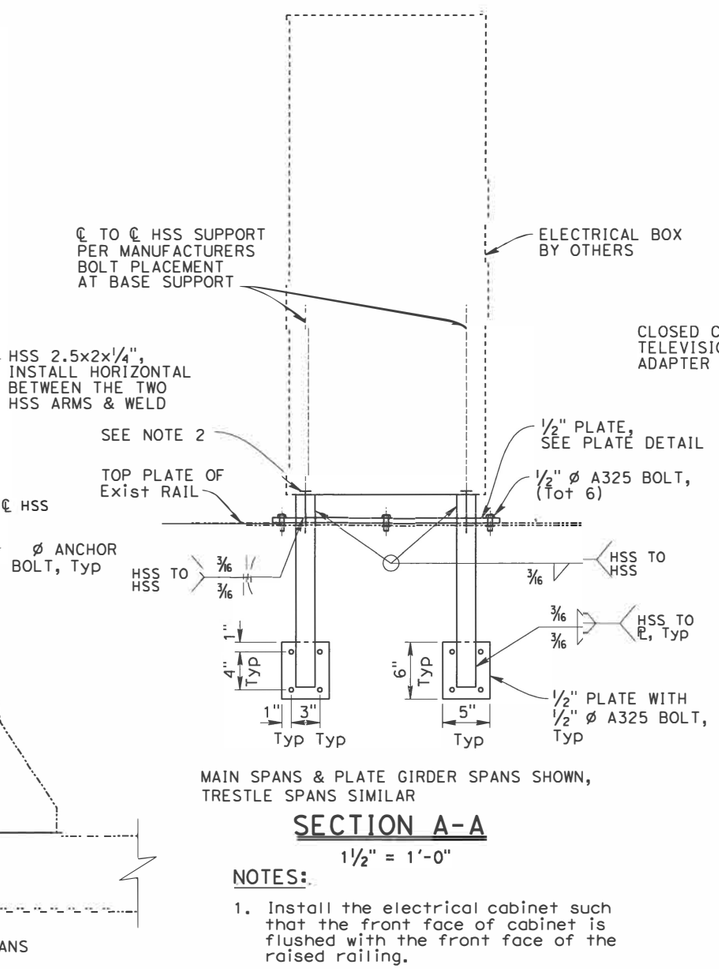

MAIN SPANS & PLATE GIRDER SPANS SHOWN, TRESTLE SPANS SIMILAR

SECTION A-A

1 1/2" = 1'-0"

NOTES:

1. Install the electrical cabinet such that the front face of cabinet is flushed with the front face of the raised railing.
2. Connect the electrical cabinet at base to the HSS support per manufacturer. Use through bolts.
3. Before pre-drilling holes on HSS supports coordinate the cabinet bolted connection locations with the manufacturer.
4. All structural steel items should be hot dipped galvanized and painted as needed for aesthetic compatibility.
5. See Electrical Plans for Equipment types and locations.
6. Exist tubular rail & post, trim back as needed to insert the electrical box with 1" clearance to the face of the box, cap the exposed end of the rail after trimming.
7. If the cabinet is installed next to the new railing, terminate cable railings using end posts as needed to insert the electrical cabinet, max 5" gap between cabinet and end post

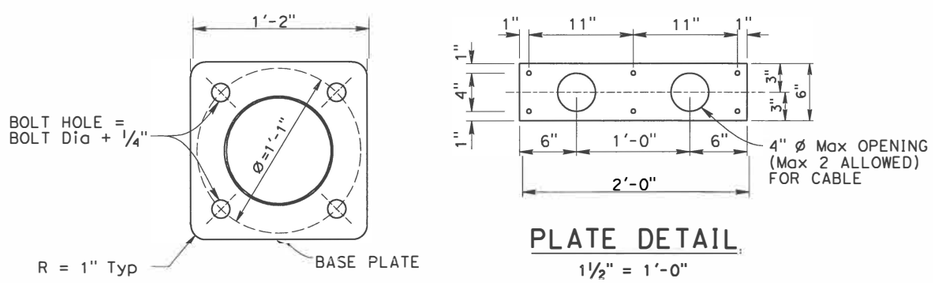

BASE PLATE AND STIFFENER PLATE DETAIL

2" = 1'-0"

PLATE DETAIL

1 1/2" = 1'-0"

LEGEND:

EXISTING STRUCTURE

NEW CONSTRUCTION

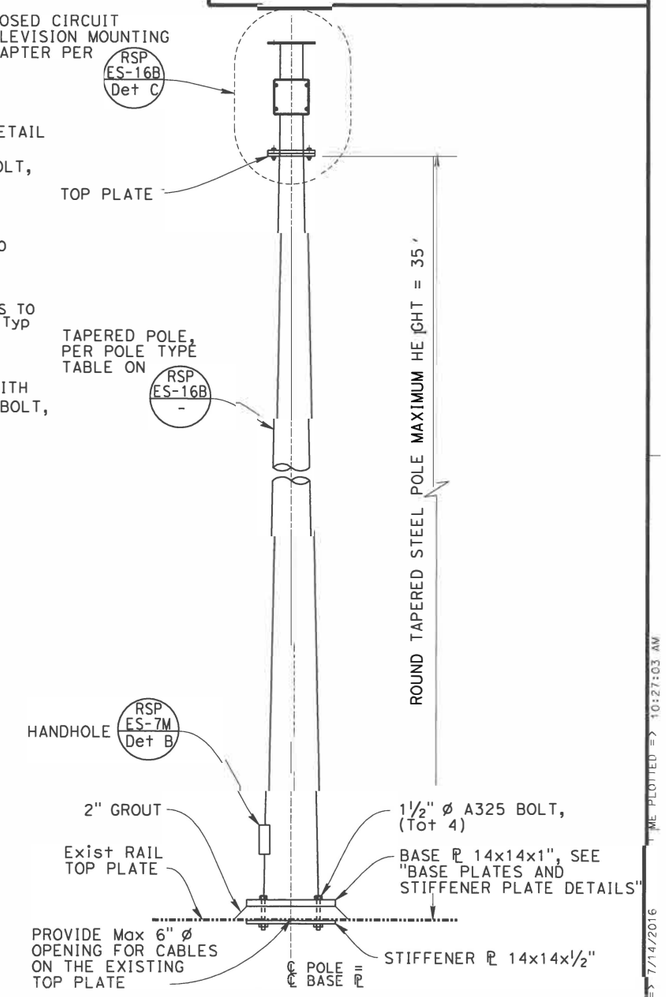

MAIN SPANS SHOWN, PLATE GIRDER SPANS SIMILAR

CCTV MOUNTING CAMERA DETAIL

1" = 1'-0"

DESIGN OVERSIGHT
7/14/16
SIGN OFF DATE

	BY	CHECKED
DESIGN	A. Rejaie	M. Vargas
DETAILS	H. Li	M. Vargas
QUANTITIES	A. Rejaie	M. Vargas

PREPARED FOR THE STATE OF CALIFORNIA DEPARTMENT OF TRANSPORTATION

Erik Okada
PROJECT ENGINEER

BRIDGE NO. 28-0100
POST MILE 6.22

RICHMOND-SAN RAFAEL BRIDGE (MODIFY)

MISCELLANEOUS ELECTRICAL CONNECTION DETAILS 1

DESIGN DETAIL SHEET (ENGLISH) (REV. 06-01-09)

ORIGINAL SCALE IN INCHES FOR REDUCED PLANS 0 1 2 3

UNIT: 0000
PROJECT NUMBER & PHASE: 04150004021
CONTRACT NO.: 04-4J7104

DISREGARD PRINTS BEARING EARLIER REVISION DATES

REVISION DATES

SHEET 7 OF 8

FILE => 086-28-0100-t-brdt04.dgn

DATE PLOTTED => 7/14/2016 TIME PLOTTED => 10:27:03 AM

DIST	COUNTY	ROUTE	POST MILES TOTAL PROJECT	SHEET No	TOTAL SHEETS
04	CC/Mrn	580	5.0/7.8, 0.0/3.3	567	579

REGISTERED CIVIL ENGINEER — DATE 7/14/16

7/26/16
PLANS APPROVAL DATE

REGISTERED PROFESSIONAL ENGINEER — E. OKADA — No. S4415 — Exp. 6-30-18 — STRUCTURAL — STATE OF CALIFORNIA

The State of California or its officers or agents shall not be responsible for the accuracy or completeness of scanned copies of this plan sheet.

HNTB CORPORATION
1111 BROADWAY
9TH FLOOR
OAKLAND, CA 94607

BAY AREA TOLL AUTHORITY
375 BEALE STREET, SUITE 800
SAN FRANCISCO, CA 94105

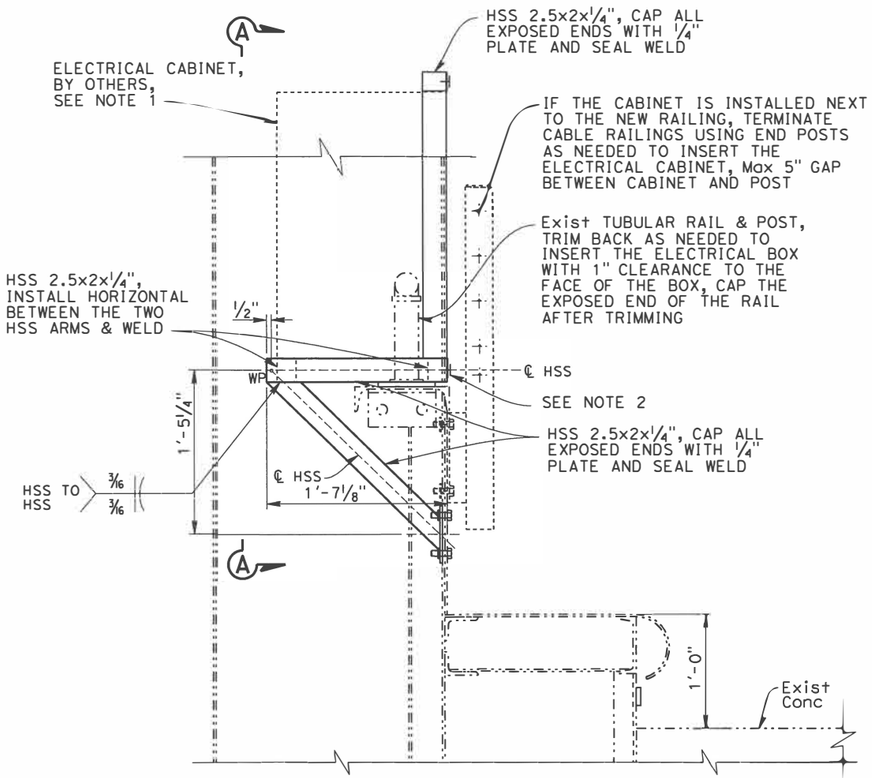

MAIN SPANS SHOWN, PLATE GIRDER SPANS SIMILAR

FACE-MOUNT ELECTRICAL CABINET CONNECTION DETAIL

1 1/2" = 1'-0"

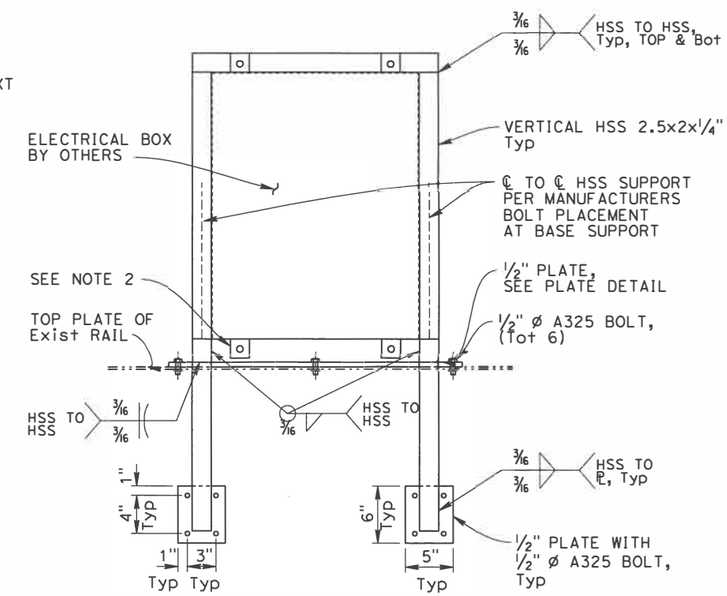

SECTION A-A

1 1/2" = 1'-0"

NOTES:

1. Install the electrical cabinet such that the front face of cabinet is flushed with the front face of the raised railing.
2. Use cabinet face mount tabs to connect to the face of HSS per manufacturers specification.
3. Before pre-drilling holes on HSS supports coordinate the cabinet bolted connection locations with the manufacturer.
4. All structural steel items should be hot dipped galvanized and painted as needed for aesthetic compatibility.
5. See Electrical Plans for Equipment types and locations.

LEGEND:

EXISTING STRUCTURE

NEW CONSTRUCTION

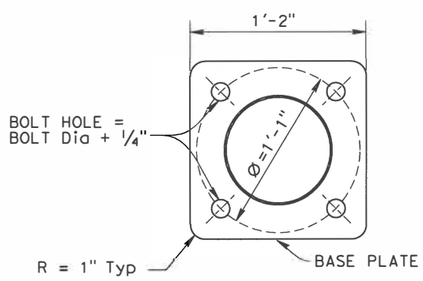

BASE PLATE AND STIFFENER PLATE DETAIL

2" = 1'-0"

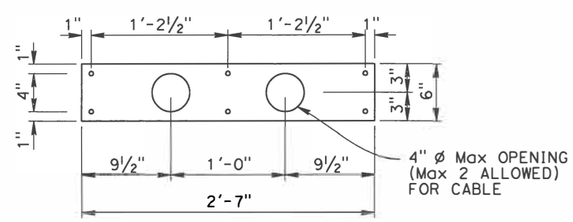

PLATE DETAIL

1 1/2" = 1'-0"

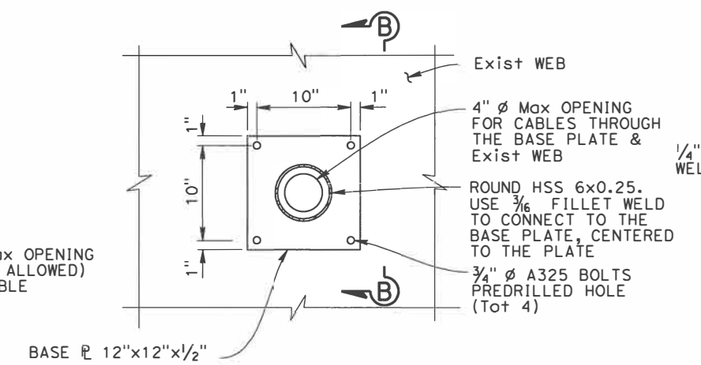

GIRDER WEB AND TRUSS FACE MOUNT CAMERA DETAIL

1 1/2" = 1'-0"

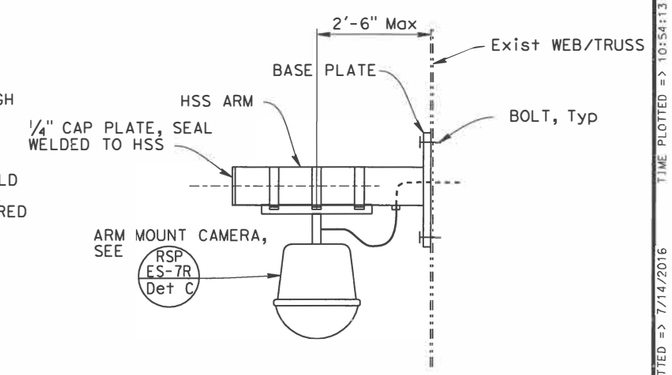

SECTION B-B

1 1/2" = 1'-0"

DESIGN OVERSIGHT 7/14/16 SIGN OFF DATE	DESIGN	BY A. Rejaie	CHECKED M. Vargas
	DETAILS	BY H. Li	CHECKED M. Vargas
	QUANTITIES	BY A. Rejaie	CHECKED M. Vargas

PREPARED FOR THE STATE OF CALIFORNIA DEPARTMENT OF TRANSPORTATION

Erik Okada — PROJECT ENGINEER

BRIDGE NO. 28-0100 — POST MILE 6.22

RICHMOND-SAN RAFAEL BRIDGE (MODIFY)

MISCELLANEOUS ELECTRICAL CONNECTION DETAILS 2

DESIGN DETAIL SHEET (ENGLISH) (REV. 06-01-09)

ORIGINAL SCALE IN INCHES FOR REDUCED PLANS 0 1 2 3

UNIT: 0000
PROJECT NUMBER & PHASE: 04150004021
CONTRACT NO.: 04-4J7104

DISREGARD PRINTS BEARING EARLIER REVISION DATES

REVISION DATES

SHEET 8 OF 8

FILE => 087-28-0100-t-brdt05.dgn

USERNAME => hu111

DATE PLOTTED => 7/14/2016 TIME PLOTTED => 10:54:13 AM

DIST	COUNTY	ROUTE	POST MILES TOTAL PROJECT	SHEET No	TOTAL SHEETS
04	CC/Mrn	580	5.0/7.8, 0.0/3.3	568	579

GEOTECHNICAL PROFESSIONAL — DATE 7/13/16

7/26/16
PLANS APPROVAL DATE

REGISTERED PROFESSIONAL ENGINEER — GARY PARIKH — No. 666 — Exp. 12/31/17 — GEOTECHNICAL — STATE OF CALIFORNIA

The State of California or its officers or agents shall not be responsible for the accuracy or completeness of scanned copies of this plan sheet.

PARIKH CONSULTANTS, INC.
2360 QUME DRIVE, SUITE A
SAN JOSE, CA 95131

NOTES:

Standard Penetration Test Sampler: I.D. = 1.4"; O.D. = 2" Modified California Sampler: I.D. = 2.5"; O.D. = 3" Hammer Assembly: A 140 lb hammer with a 30" drop (Automatic Hammer)

This LOTB sheet was prepared in accordance with the Caltrans Soil & Rock, Logging, Classification, and Presentation Manual (2010)

See Caltrans 2010 Standard Plans A10F, A10G and A10H for Soil and Rock Legend.

All dimensions are in feet unless otherwise shown

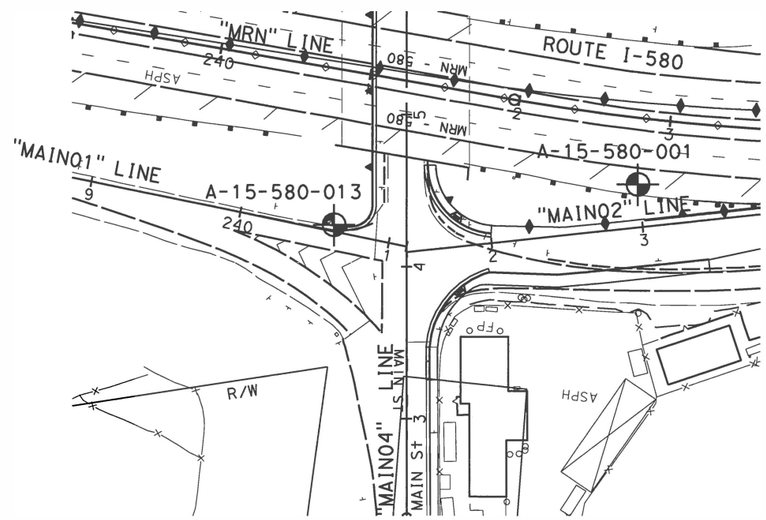

PLAN
1"=50'

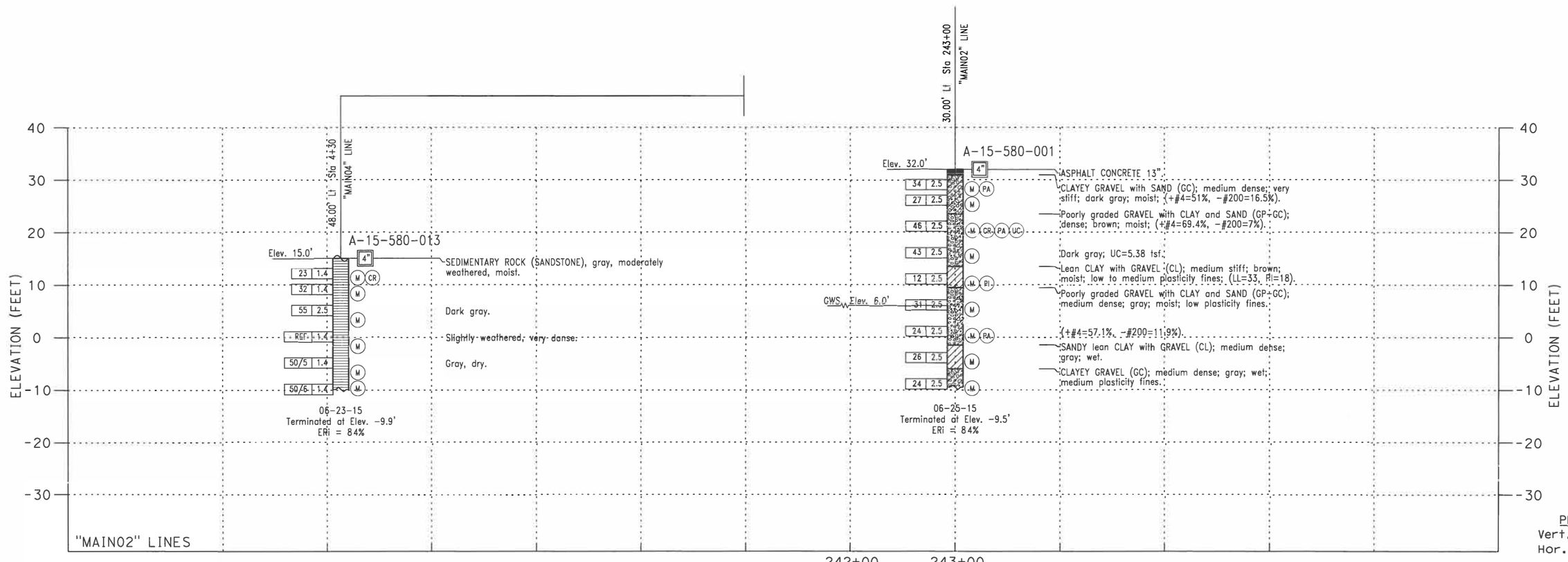

PROFILE
Vert. : 1" = 10'
Hor. : 1" = 50'

DESIGN OVERSIGHT	DRAWN BY	KIM OUYANG	L.S. BHANGOO — FIELD INVESTIGATION BY:
X 7/14/16 SIGN OFF DATE	CHECKED BY	KANDEEP SARAVANAPAVAN	DATE: JUNE & DECEMBER 2015 TO MARCH 2016

PREPARED FOR THE STATE OF CALIFORNIA DEPARTMENT OF TRANSPORTATION

KANDEEP SARAVAN APAVAN — PROJECT ENGINEER

BRIDGE NO. — POST MILES

RICHMOND - SAN RAFAEL BRIDGE ACCESS IMPROVEMENT PROJECT

LOG OF TEST BORINGS 1 OF 4

GS GEOTECHNICAL LOG OF TEST BORINGS SHEET (ENGLISH) (REV. 03/14/12)

ORIGINAL SCALE IN INCHES FOR REDUCED PLANS 0 1 2 3

UNIT:
PROJECT NUMBER & PHASE:
CONTRACT NO.:

DISREGARD PRINTS BEARING EARLIER REVISION DATES — REVISION DATES — SHEET — OF

FILE => 2 of 5.dgn

USERNAME => oaouthier DATE PLOTTED => 4/14/2016 TIME PLOTTED => 4:16:44 PM

DIST	COUNTY	ROUTE	POST MILES TOTAL PROJECT	SHEET No	TOTAL SHEETS
04	CC/Mrn	580	5.0/7.8, 0.0/3.3	569	579

GEOTECHNICAL PROFESSIONAL — DATE 7/13/16

7/26/16
PLANS APPROVAL DATE

REGISTERED PROFESSIONAL ENGINEER — GARY PARIKH No. 666 Exp. 12/31/17 GEOTECHNICAL — STATE OF CALIFORNIA

The State of California or its officers or agents shall not be responsible for the accuracy or completeness of scanned copies of this plan sheet.

PARIKH CONSULTANTS, INC.
2360 QUME DRIVE, SUITE A
SAN JOSE, CA 95131

NOTES:

Standard Penetration Test Sampler: I.D. = 1.4"; O.D. = 2" Modified California Sampler: I.D. = 2.5"; O.D. = 3" Hammer Assembly: A 140 lb hammer with a 30" drop (Automatic Hammer)

This LOTB sheet was prepared in accordance with the Caltrans Soil & Rock, Logging, Classification, and Presentation Manual (2010)

See Caltrans 2010 Standard Plans A10F, A10G and A10H for Soil and Rock Legend.

All dimensions are in feet unless otherwise shown

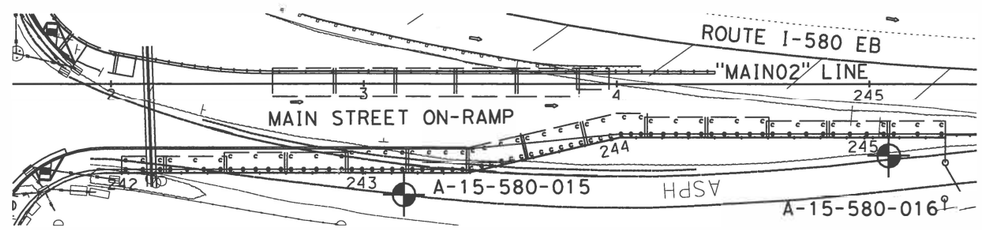

PLAN
1"=30'

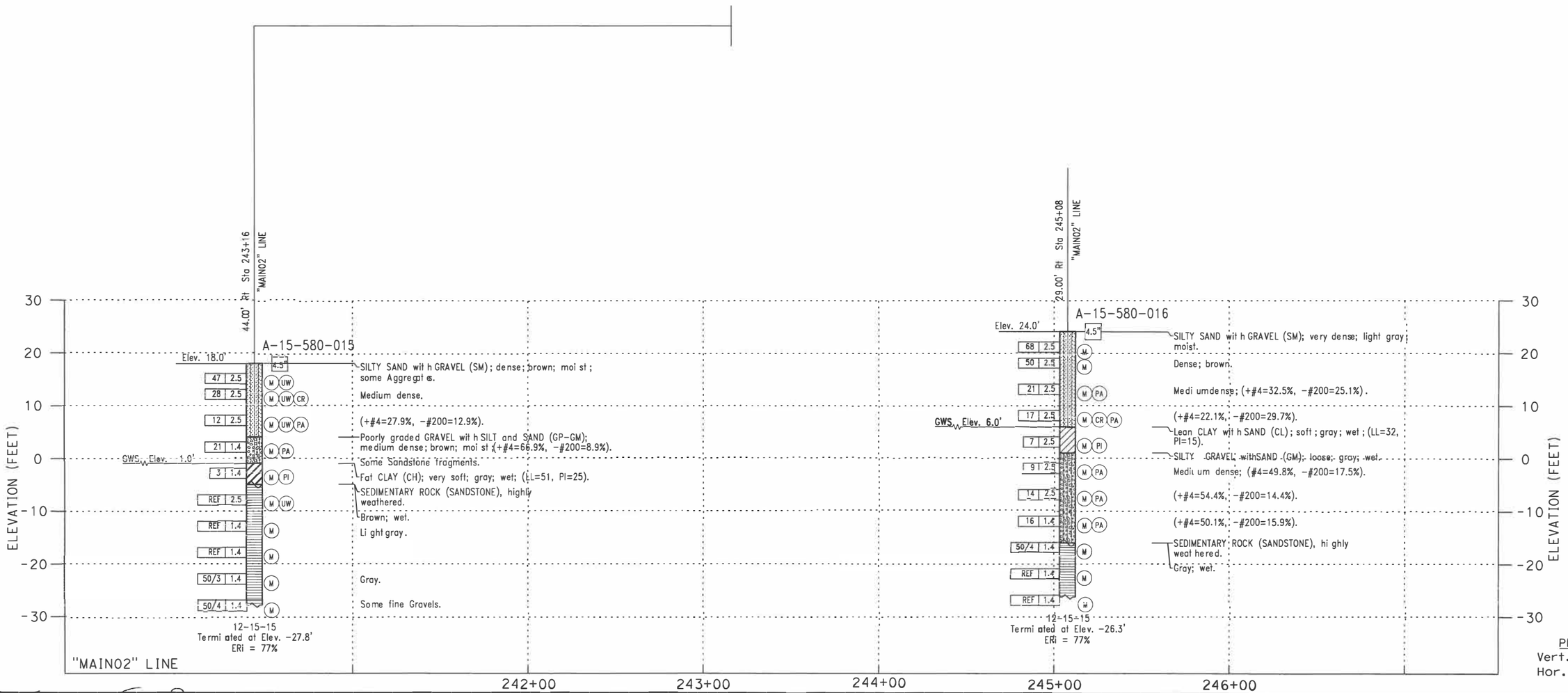

PROFILE
Vert. : 1" = 10'
Hor. : 1" = 30'

X DESIGN OVERSIGHT X 7/14/16 SIGN OFF DATE	DRAWN BY: KIM OUYANG	L.S. BHANGOO FIELD INVESTIGATION BY:	PREPARED FOR THE STATE OF CALIFORNIA DEPARTMENT OF TRANSPORTATION	KANDEEP SARAVANAPAVAN PROJECT ENGINEER	BRIDGE NO. / POST MILES
	CHECKED BY: KANDEEP SARAVANAPAVAN	DATE: JUNE & DECEMBER 2015 TO MARCH 2016			

RICHMOND - SAN RAFAEL BRIDGE ACCESS IMPROVEMENT PROJECT

LOG OF TEST BORINGS 2 OF 4

GS GEOTECHNICAL LOG OF TEST BORINGS SHEET (ENGLISH) (REV. 03/14/12)

ORIGINAL SCALE IN INCHES FOR REDUCED PLANS 0 1 2 3

UNIT: PROJECT NUMBER & PHASE: CONTRACT NO.:

DISREGARD PRINTS BEARING EARLIER REVISION DATES — REVISION DATES — SHEET OF

FILE => 3 of 5.dgn

USERNAME => coouthier DATE PLOTTED => 4/22/2016 TIME PLOTTED => 1:33:06 PM

DIST	COUNTY	ROUTE	POST MILES TOTAL PROJECT	SHEET No	TOTAL SHEETS
04	CC/Mrn	580	5.0/7.8, 0.0/3.3	570	579

GEOTECHNICAL PROFESSIONAL — DATE 7/13/16

7/26/16
PLANS APPROVAL DATE

REGISTERED PROFESSIONAL ENGINEER — GARY PARIKH — No. 666 — Exp. 12/31/17 — GEOTECHNICAL — STATE OF CALIFORNIA

The State of California or its officers or agents shall not be responsible for the accuracy or completeness of scanned copies of this plan sheet.

PARIKH CONSULTANTS, INC.
2360 QUME DRIVE, SUITE A
SAN JOSE, CA 95131

NOTES:

Standard Penetration Test Sampler: I.D. = 1.4"; O.D. = 2" Modified California Sampler: I.D. = 2.5"; O.D. = 3" Hammer Assembly: A 140 lb hammer with a 30" drop (Automatic Hammer)

This LOTB sheet was prepared in accordance with the Caltrans Soil & Rock, Logging, Classification, and Presentation Manual (2010)

See Caltrans 2010 Standard Plans A10F, A10G and A10H for Soil and Rock Legend.

All dimensions are in feet unless otherwise shown

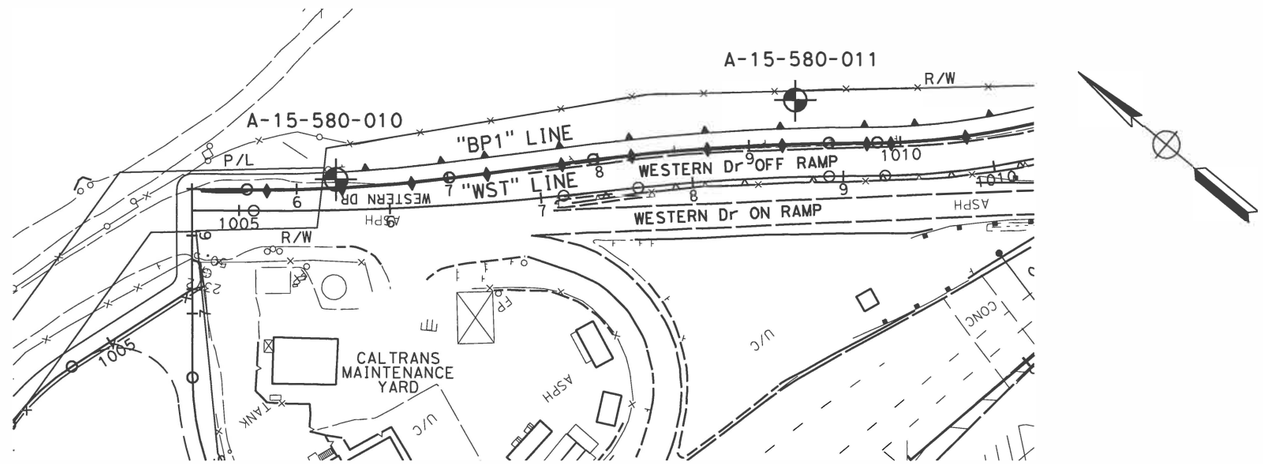

PLAN
1"=50'

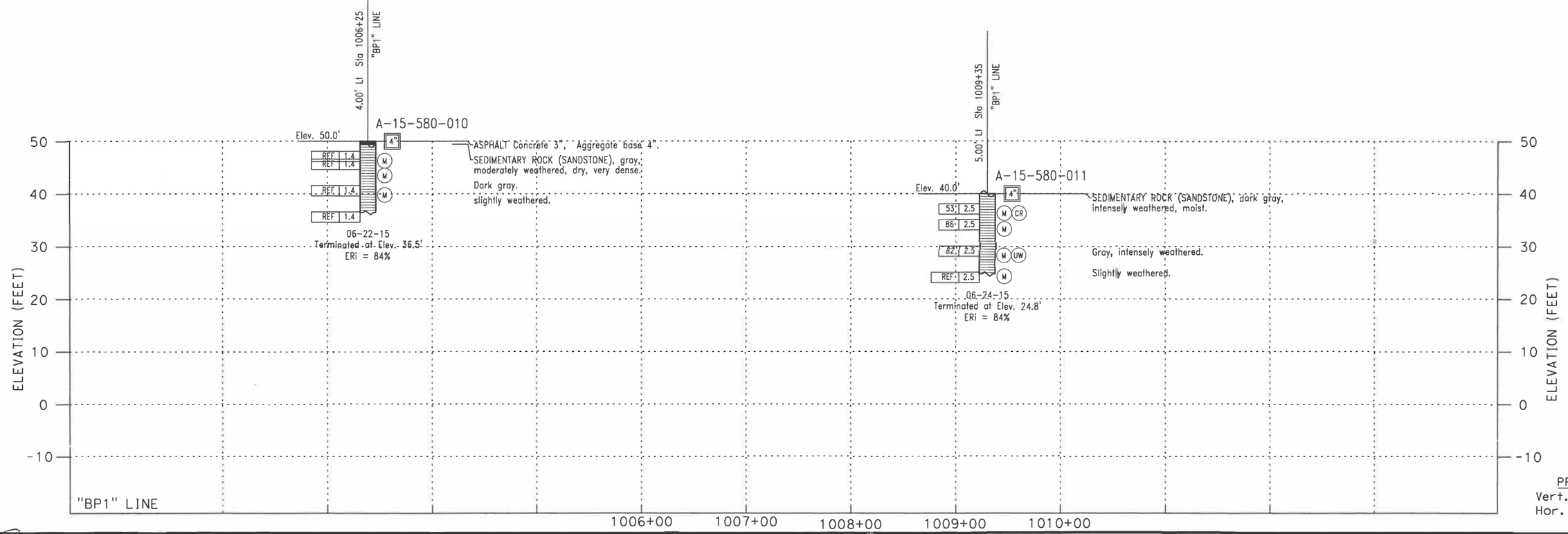

PROFILE
Vert. : 1" = 10'
Hor. : 1" = 50'

X DESIGN OVERSIGHT X 7/14/16 SIGN OFF DATE	DRAWN BY: KIM OUYANG	L.S. BHANGOO FIELD INVESTIGATION BY:	PREPARED FOR THE STATE OF CALIFORNIA DEPARTMENT OF TRANSPORTATION	KANDEEP SARAVANAPAVAN PROJECT ENGINEER	BRIDGE NO. / POST MILES
	CHECKED BY: KANDEEP SARAVANAPAVAN	DATE: JUNE & DECEMBER 2015 TO MARCH 2016			

RICHMOND - SAN RAFAEL BRIDGE ACCESS IMPROVEMENT PROJECT

LOG OF TEST BORINGS 3 OF 4

GS GEOTECHNICAL LOG OF TEST BORINGS SHEET (ENGLISH) (REV. 03/14/12)

ORIGINAL SCALE IN INCHES FOR REDUCED PLANS 0 1 2 3

UNIT: PROJECT NUMBER & PHASE: CONTRACT NO.:

DISREGARD PRINTS BEARING EARLIER REVISION DATES — REVISION DATES — SHEET — OF

FILE => 4 of 5.dgn

USERNAME => oadufhler DATE PLOTTED => 4/14/2016 TIME PLOTTED => 4:06:28 PM

DIST	COUNTY	ROUTE	POST MILES TOTAL PROJECT	SHEET No	TOTAL SHEETS
04	CC/Mrn	580	5.0/7.8, 0.0/3.3	571	579

GEOTECHNICAL PROFESSIONAL — DATE 7/13/16

7/26/16
PLANS APPROVAL DATE

REGISTERED PROFESSIONAL ENGINEER — GARY PARIKH — No. 666 — EXP. 12/31/17 — GEOTECHNICAL — STATE OF CALIFORNIA

The State of California or its officers or agents shall not be responsible for the accuracy or completeness of scanned copies of this plan sheet.

PARIKH CONSULTANTS, INC.
2360 QUME DRIVE, SUITE A
SAN JOSE, CA 95131

NOTES:

Standard Penetration Test Sampler: I.D. = 1.4"; O.D. = 2" Modified California Sampler: I.D. = 2.5"; O.D. = 3" Hammer Assembly: A 140 lb hammer with a 30" drop (Automatic Hammer)

This LOTB sheet was prepared in accordance with the Caltrans Soil & Rock, Logging, Classification, and Presentation Manual (2010)

See Caltrans 2010 Standard Plans A10F, A10G and A10H for Soil and Rock Legend.

All dimensions are in feet unless otherwise shown

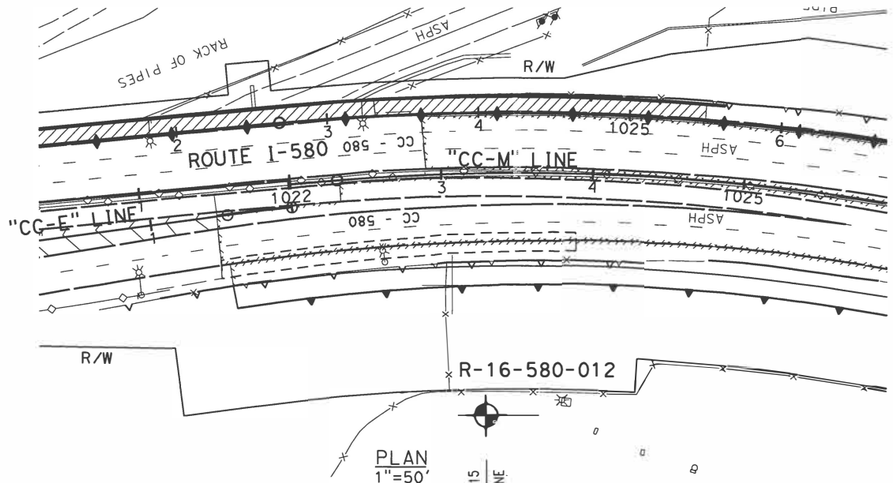

PLAN
1"=50'

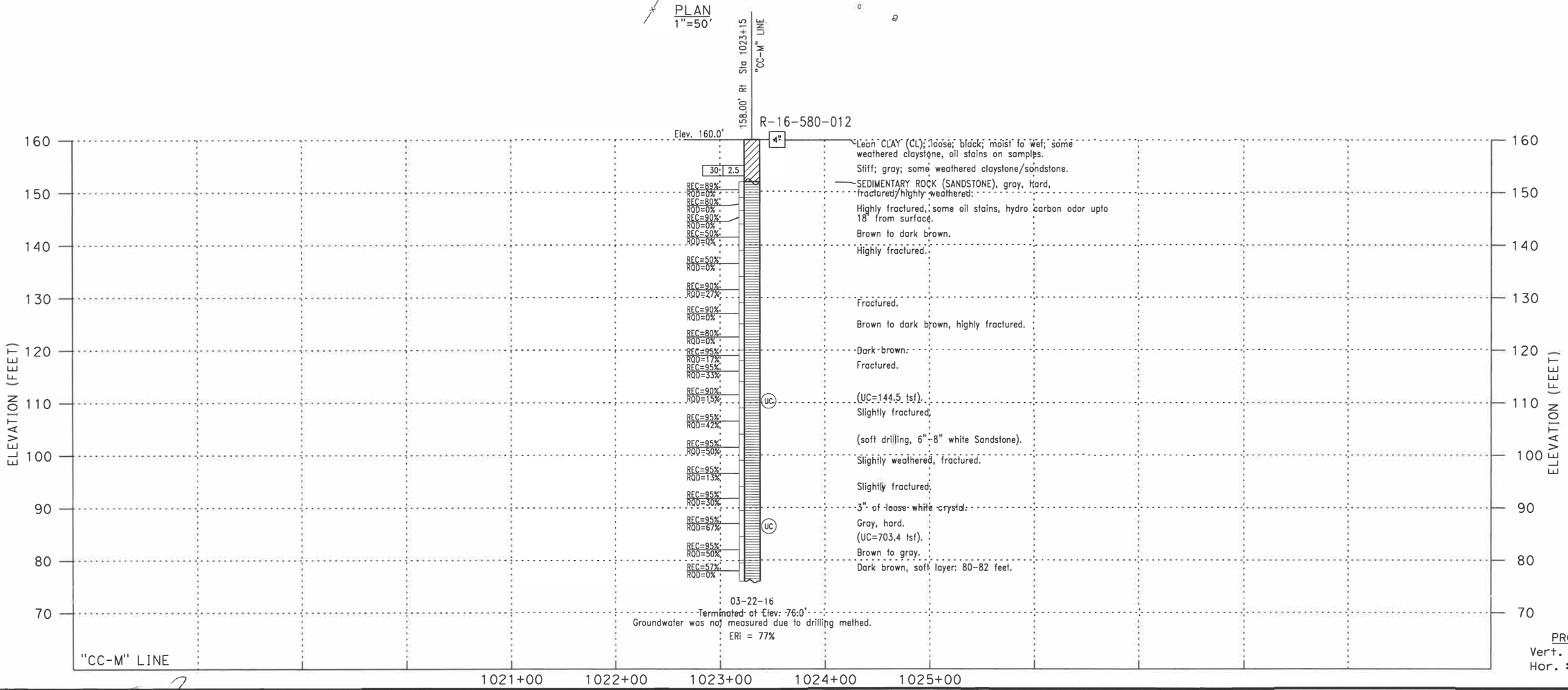

PROFILE
Vert. : 1" = 10'
Hor. : 1" = 50'

DESIGN OVERSIGHT x 7/14/16 SIGN OFF DATE	DRAWN BY: KIM OUYANG	L.S. BHANGOO FIELD INVESTIGATION BY:	PREPARED FOR THE STATE OF CALIFORNIA DEPARTMENT OF TRANSPORTATION	KANDEEP SARAVANAPAVAN PROJECT ENGINEER	BRIDGE NO. / POST MILES
	CHECKED BY: KANDEEP SARAVANAPAVAN	DATE: JUNE & DECEMBER 2015 TO MARCH 2016			

RICHMOND - SAN RAFAEL BRIDGE ACCESS IMPROVEMENT PROJECT

LOG OF TEST BORINGS 4 OF 4

GS GEOTECHNICAL LOG OF TEST BORINGS SHEET (ENGLISH) (REV. 03/14/12)

ORIGINAL SCALE IN INCHES FOR REDUCED PLANS 0 1 2 3

UNIT:
PROJECT NUMBER & PHASE:
CONTRACT NO.:

DISREGARD PRINTS BEARING EARLIER REVISION DATES

REVISION DATES — SHEET — OF

FILE => 5 of 5.dgn

USERNAME => aoauthier DATE PLOTTED => 4/15/2016 TIME PLOTTED => 1:16:35 PM

Dist	COUNTY	ROUTE	POST MILES TOTAL PROJECT	SHEET No.	TOTAL SHEETS
04	CC, Mrn	580	5.0/7.8, 0.0/3.2	572	579

LICENSED LANDSCAPE ARCHITECT

7-29-16
PLANS APPROVAL DATE

LICENSED LANDSCAPE ARCHITECT
CAPE C. HAYGOOD No. 1594
Signature
08-31-17
Renewal Date
7-29-16
Date
STATE OF CALIFORNIA

THE STATE OF CALIFORNIA OR ITS OFFICERS OR AGENTS SHALL NOT BE RESPONSIBLE FOR THE ACCURACY OR COMPLETENESS OF SCANNED COPIES OF THIS PLAN SHEET.

HAYGOOD & ASSOCIATES
LANDSCAPE ARCHITECTS
1496 B SOLANO AVENUE
ALBANY, CA 94706

BAY AREA TOLL AUTHORITY
375 BEALE STREET
SUITE 800
SAN FRANCISCO, CA 94105

RETAINING WALLS 4 AND 7:
FORMLINER PATTERN SURFACE AWAY FROM FACE OF WALL

+0.00" — MEDIUM SANDBLAST FINISH
+0.00" — BOTTOM OF GROOVE AROUND BIRDS IN WAVE PATTERN
+0.00 TO +1.75" — FRACTURED RIB VALLEY TO PEAK
+2.00" — WAVE PATTERN WITH SMOOTH FINISH
+3.00" — TOP AND SIDE BANDS WITH SMOOTH FINISH
+1.00" TO +3.00" — BIRDS WITH ARTICULATED BODY SHAPE AND SMOOTH FINISH

RETAINING WALLS 1, 2, 5 AND 6:
FORMLINER PATTERN SURFACE AWAY FROM FACE OF WALL

+0.00" — MEDIUM SANDBLAST FINISH
+0.00" — BOTTOM OF GROOVE AROUND BIRDS IN WAVE PATTERN
+0.00 TO +1.50" — FRACTURED FIN VALLEY TO PEAK
+1.75" — WAVE PATTERN WITH SMOOTH FINISH
+3.00" — SIDE BANDS WITH SMOOTH FINISH
+1.00" TO +3.00" — BIRDS WITH ARTICULATED BODY SHAPE AND SMOOTH FINISH

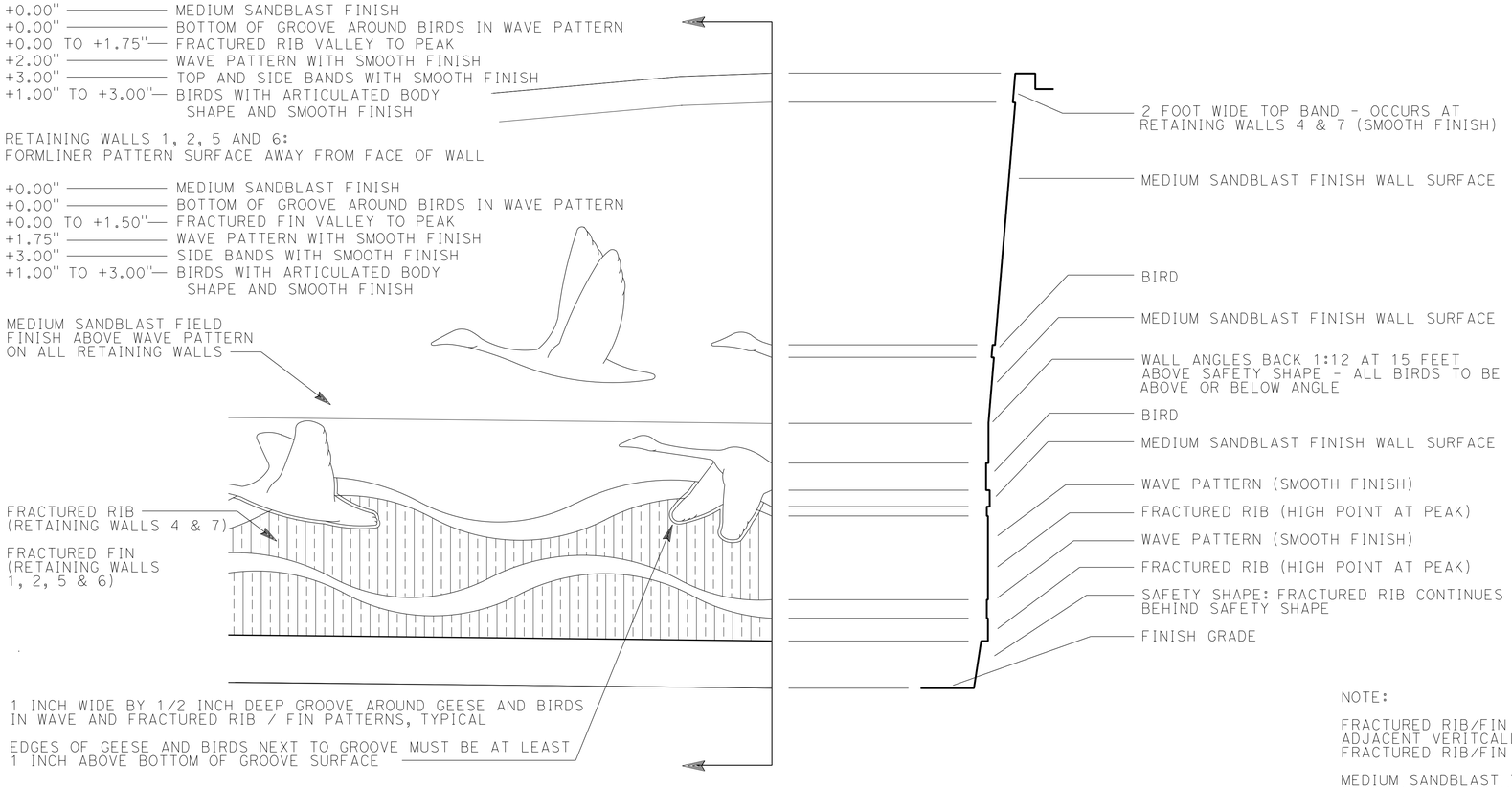

TYPICAL RETAINING WALL SECTION (SECTION AT RETAINING WALL 4 OTHER WALLS ARE SIMILAR)

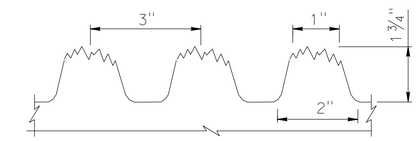

FRACTURED RIB DETAIL

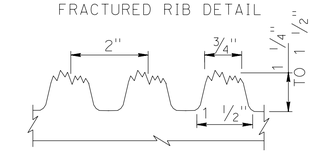

FRACTURED FIN DETAIL

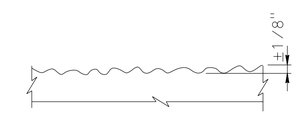

MEDIUM SANDBLAST FINISH DETAIL

NOTE:

FRACTURED RIB/FIN PATTERNS MUST ALIGN WITH ADJACENT VERITCALLY AND HORIZONTALLY PLACED FRACTURED RIB/FIN FORMLINER PANELS

MEDIUM SANDBLAST TEXTURE MUST BE UNIFORM THROUGHOUT MEDIUM SANDBLAST AREA

FORMLINER PATTERN DETAILS

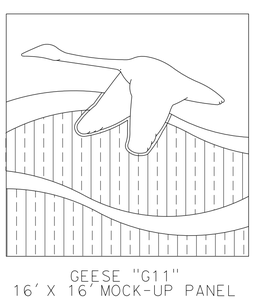

GEESE "G11"
16' X 16' MOCK-UP PANEL

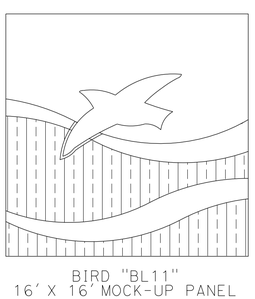

BIRD "BL11"
16' X 16' MOCK-UP PANEL

NOTE:

FRACTURED RIBS AND FINS PEAKS AND VALLEYS MUST BE IN ALIGNMENT ABOVE AND BELOW WAVE PATTERN.

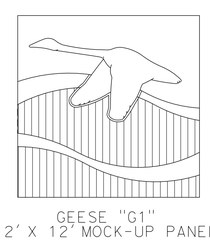

GEESE "G1"
12' X 12' MOCK-UP PANEL

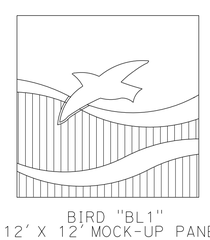

BIRD "BL1"
12' X 12' MOCK-UP PANEL

GEESE AND BIRD SCALE MODELS, TEST AND MOCK-UP PANELS WITH WAVE PATTERN

NOTES:

THESE DETAILS ARE DIAGRAMMATIC AND INDICATIVE OF THE DESIGN INTENT FOR THE RETAINING WALL FORMLINER PATTERNS. THE DRAWINGS DO NOT SHOW ALL THE REQUIRED ELEMENTS AND DETAILS FOR FABRICATION OF THE FORMLINER OR INSTALLATION ALONG THE RETAINING WALLS.

PROVIDE SHOP DRAWINGS OF SUFFICIENT SIZE AND DETAIL THAT CLEARLY DELINEATE THE CONSTRUCTION, INCLUDING, BUT NOT LIMITED TO DETAILS OF LAYOUT, DIMENSIONS, MATERIALS, FINISHES AND INSTALLATION OF FORMLINER PATTERNS AT EACH RETAINING WALL.

PROVIDE SCALE MODELS, TEST AND MOCK-UP PANELS FOR ENGINEER'S REVIEW AND APPROVAL.

CONTRACTOR IS RESPONSIBLE FOR INSURING FORMLINER PATTERNS ARE FABRICATED SO THAT THE FORMLINERS CAN BE INSTALLED AND RELEASED TO PROVIDE PATTERN SHOWN AND CONFORM TO THE RETAINING WALLS HORIZONTAL CURVES AND WALL FOLD LINE ON RETAINING WALL 4.

RETAINING WALL DETAILS

R-2

REVISED BY	DATE REVISED
CS	7-29-16

CALCULATED-DESIGNED BY: C. SAITO
CHECKED BY: L. HAYGOOD
CONSULTANT SENIOR LANDSCAPE ARCHITECT: LEAH C. HAYGOOD

STATE OF CALIFORNIA - DEPARTMENT OF TRANSPORTATION
Caltrans®

LAST REVISION: 11-20-15
DATE PLOTTED => 8/17/2016
TIME PLOTTED => 11:01:19 AM

Dist	COUNTY	ROUTE	POST MILES TOTAL PROJECT	SHEET No.	TOTAL SHEETS
04	CC, Mrn	580	5.0/7.8, 0.0/3.2	573	579

LICENSED LANDSCAPE ARCHITECT

7-29-16
PLANS APPROVAL DATE

LICENSED LANDSCAPE ARCHITECT
LARC-HAYGOOD No. 1594
Signature
08-31-17
Renewal Date
7-29-16
Date
STATE OF CALIFORNIA

THE STATE OF CALIFORNIA OR ITS OFFICERS OR AGENTS SHALL NOT BE RESPONSIBLE FOR THE ACCURACY OR COMPLETENESS OF SCANNED COPIES OF THIS PLAN SHEET.

HAYGOOD & ASSOCIATES
LANDSCAPE ARCHITECTS
1496 B SOLANO AVENUE
ALBANY, CA 94706

BAY AREA TOLL AUTHORITY
375 BEALE STREET
SUITE 800
SAN FRANCISCO, CA 94105

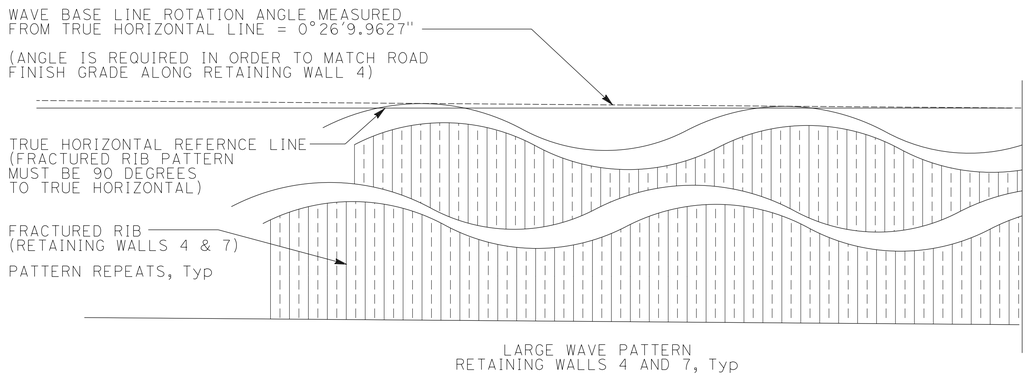

LARGE WAVE PATTERN
RETAINING WALLS 4 AND 7, Typ

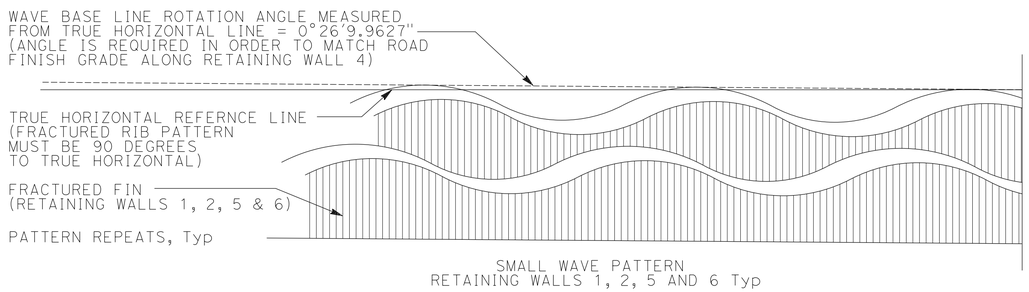

SMALL WAVE PATTERN
RETAINING WALLS 1, 2, 5 AND 6 Typ

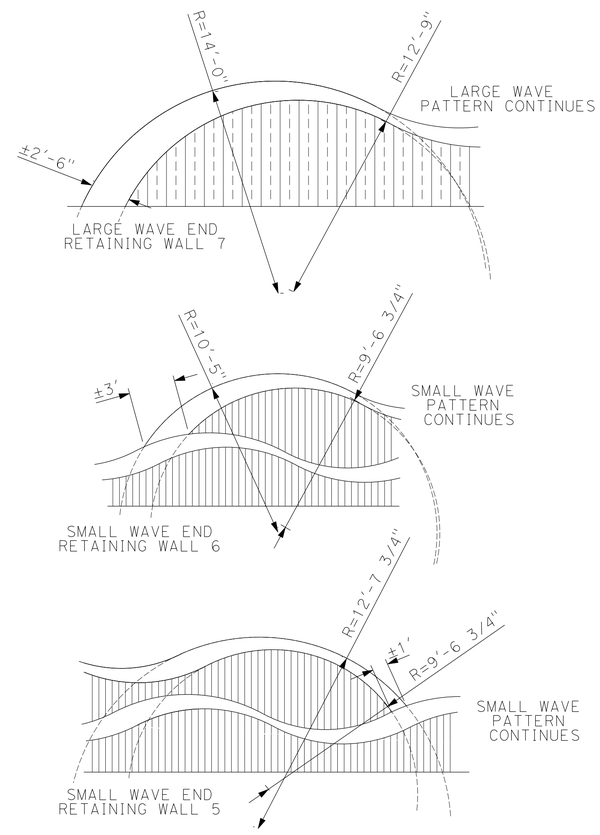

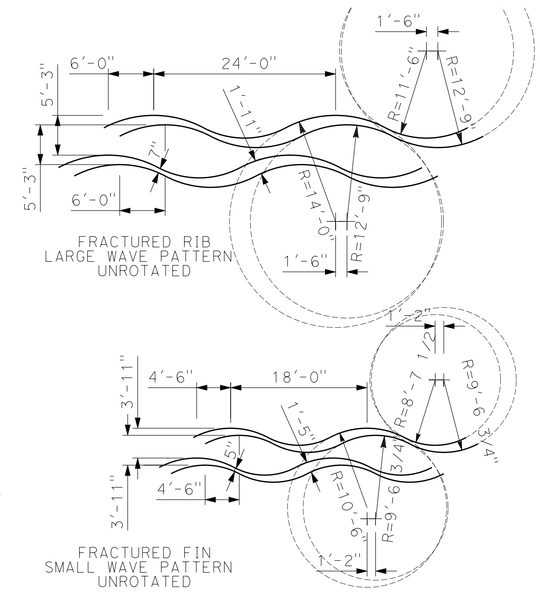

WAVE PATTERN SCHEMATIC DETAILS

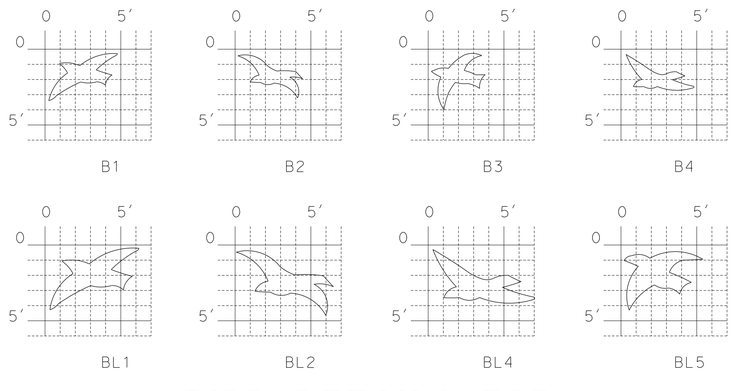

BIRD DETAILS FOR RETAINING WALLS 1, 2, 5 & 6

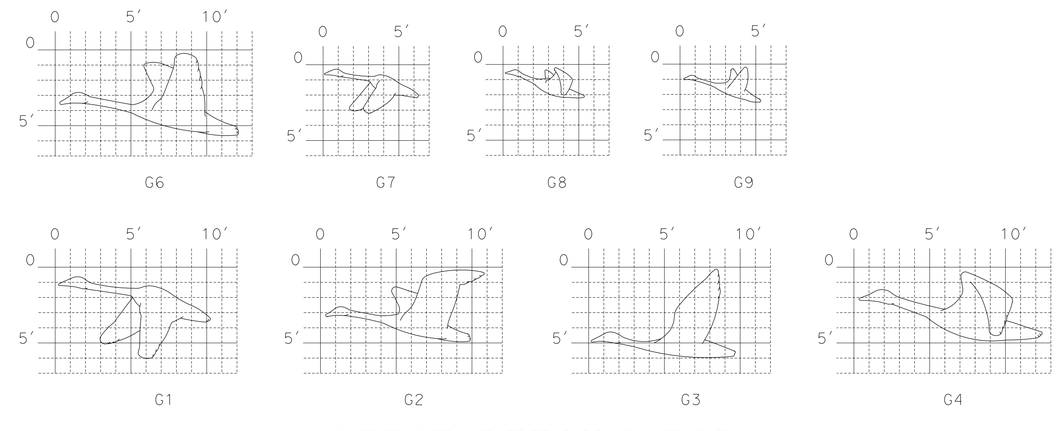

GEESE DETAILS FOR RETAINING WALLS 1, 2, 5 & 6

RETAINING WALL DETAILS

R-3

REVISED BY	CS		
DATE REVISED	7-29-16		
CALCULATED-DESIGNED BY	C. SAITO		
CHECKED BY	L. HAYGOOD		
CONSULTANT SENIOR LANDSCAPE ARCHITECT	LEAH C. HAYGOOD		

STATE OF CALIFORNIA - DEPARTMENT OF TRANSPORTATION
Caltrans

LAST REVISION 11-20-15
DATE PLOTTED => 8/17/2016
TIME PLOTTED => 11:01:25 AM

Dist	COUNTY	ROUTE	POST MILES TOTAL PROJECT	SHEET No.	TOTAL SHEETS
04	CC, Mrn	580	5.0/7.8, 0.0/3.2	574	579

LICENSED LANDSCAPE ARCHITECT

7-29-16
PLANS APPROVAL DATE

LICENSED LANDSCAPE ARCHITECT
CALIF. C. HAYGOOD No. 1594
Signature
08-31-17
Renewal Date
7-29-16
Date
STATE OF CALIFORNIA

THE STATE OF CALIFORNIA OR ITS OFFICERS OR AGENTS SHALL NOT BE RESPONSIBLE FOR THE ACCURACY OR COMPLETENESS OF SCANNED COPIES OF THIS PLAN SHEET.

HAYGOOD & ASSOCIATES
LANDSCAPE ARCHITECTS
1496 B SOLANO AVENUE
ALBANY, CA 94706

BAY AREA TOLL AUTHORITY
375 BEALE STREET
SUITE 800
SAN FRANCISCO, CA 94105

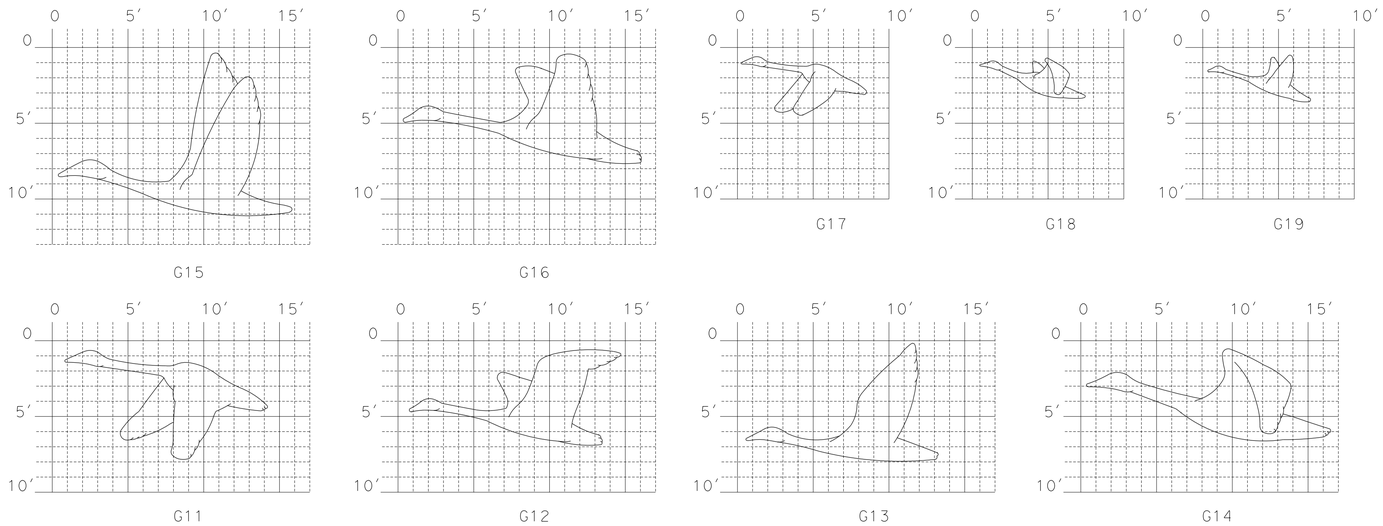

GEESE DETAILS FOR RETAINING WALL 4 & 7

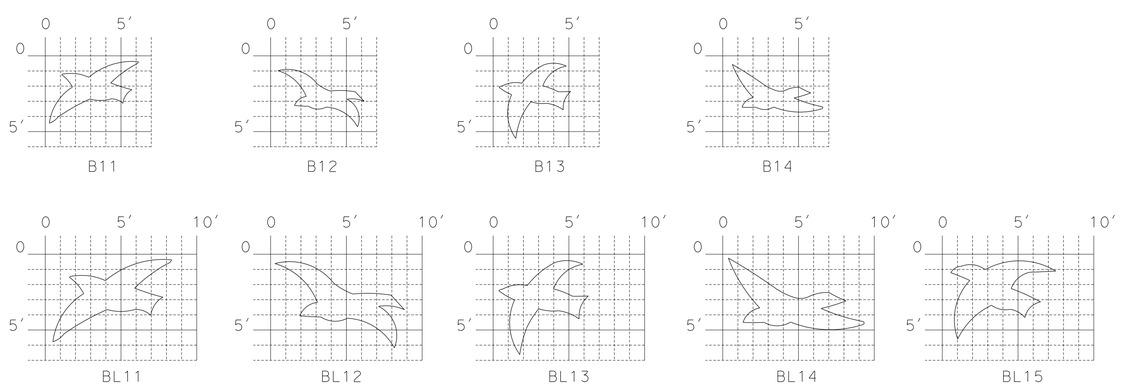

BIRD DETAILS FOR RETAINING WALLS 4 & 7

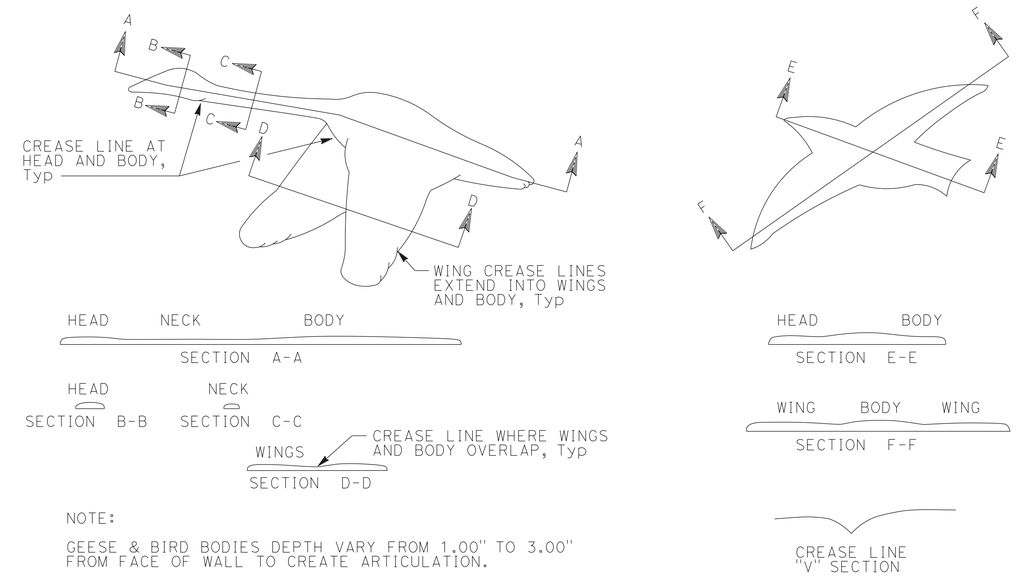

NOTE:

GEESE & BIRD BODIES DEPTH VARY FROM 1.00" TO 3.00" FROM FACE OF WALL TO CREATE ARTICULATION.

RADIUS EDGE OF BIRD SIDES SIMILAR TO SECTIONS.

CREASE MUST BE A ROUNDED EDGE "V" SHAPE.

GEESE AND BIRD SCHEMATIC SECTIONS

RETAINING WALL DETAILS

R-4

STATE OF CALIFORNIA - DEPARTMENT OF TRANSPORTATION
Caltrans

CONSULTANT SENIOR LANDSCAPE ARCHITECT: LEAH C. HAYGOOD
CALCULATED-DESIGNED BY: C. SAITO
CHECKED BY: L. HAYGOOD
REVISED BY: CS
DATE REVISED: 7-29-16

LAST REVISION 11-20-15
DATE PLOTTED => 8/17/2016
TIME PLOTTED => 11:01:29 AM

Dist	COUNTY	ROUTE	POST MILES TOTAL PROJECT	SHEET No.	TOTAL SHEETS
04	CC, Mrn	580	5.0/7.8, 0.0/3.2	575	579

LICENSED LANDSCAPE ARCHITECT

7-29-16
PLANS APPROVAL DATE

LICENSED LANDSCAPE ARCHITECT
CALIFORNIA HAYGOOD No. 3555
Signature
08-31-17
Renewal Date
7-29-16
Date
STATE OF CALIFORNIA

THE STATE OF CALIFORNIA OR ITS OFFICERS OR AGENTS SHALL NOT BE RESPONSIBLE FOR THE ACCURACY OR COMPLETENESS OF SCANNED COPIES OF THIS PLAN SHEET.

HAYGOOD & ASSOCIATES
LANDSCAPE ARCHITECTS
1496 B SOLANO AVENUE
ALBANY, CA 94706

BAY AREA TOLL AUTHORITY
375 BEALE STREET
SUITE 800
SAN FRANCISCO, CA 94105

NOTE:

TOP AND SIDE WALL BANDS, WHERE SHOWN, EXTEND 3" OUT FROM FACE OF WALL, TYPICAL FOR ALL RETAINING WALLS. SEE RETAINING WALL SECTION.

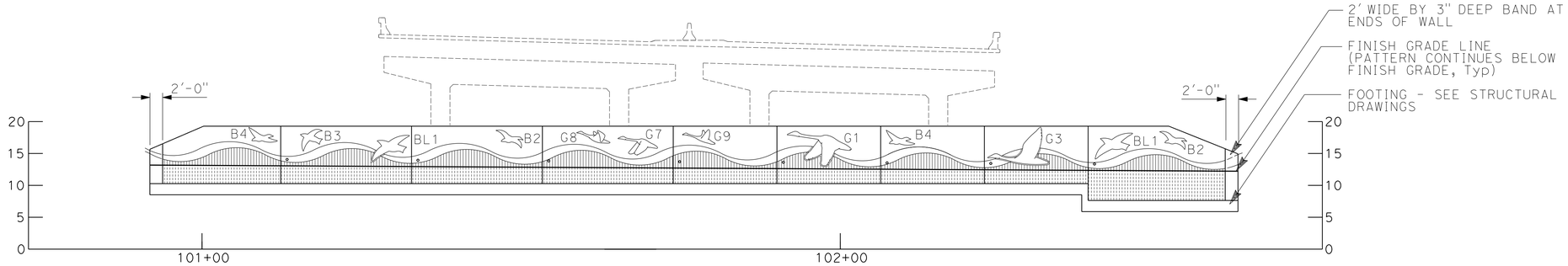

ELEVATION: RETAINING WALL 1

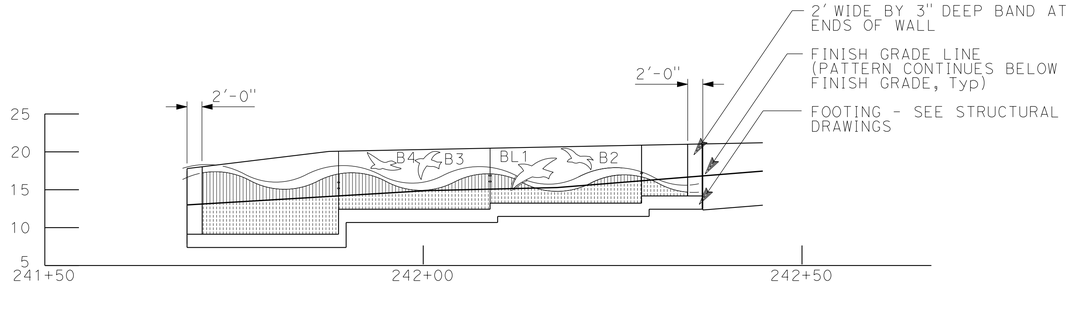

ELEVATION: RETAINING WALL 2

RETAINING WALL DETAILS

R-5

STATE OF CALIFORNIA - DEPARTMENT OF TRANSPORTATION
Caltrans

CONSULTANT SENIOR LANDSCAPE ARCHITECT: LEAH C. HAYGOOD

CALCULATED-DESIGNED BY: C. SAITO
CHECKED BY: L. HAYGOOD

REVISED BY: CS
DATE REVISED: 7-29-16

LAST REVISION: 11-20-15
DATE PLOTTED => 8/17/2016
TIME PLOTTED => 11:01:33 AM

Dist	COUNTY	ROUTE	POST MILES TOTAL PROJECT	SHEET No.	TOTAL SHEETS
04	CC, Mrn	580	5.0/7.8, 0.0/3.2	576	579

LICENSED LANDSCAPE ARCHITECT

7-29-16
PLANS APPROVAL DATE

LICENSED LANDSCAPE ARCHITECT
CAPE-C. HAYGOOD No. 1594
Signature
08-31-17
Renewal Date
7-29-16
Date
STATE OF CALIFORNIA

THE STATE OF CALIFORNIA OR ITS OFFICERS OR AGENTS SHALL NOT BE RESPONSIBLE FOR THE ACCURACY OR COMPLETENESS OF SCANNED COPIES OF THIS PLAN SHEET.

HAYGOOD & ASSOCIATES
LANDSCAPE ARCHITECTS
1496 B SOLANO AVENUE
ALBANY, CA 94706

BAY AREA TOLL AUTHORITY
375 BEALE STREET
SUITE 800
SAN FRANCISCO, CA 94105

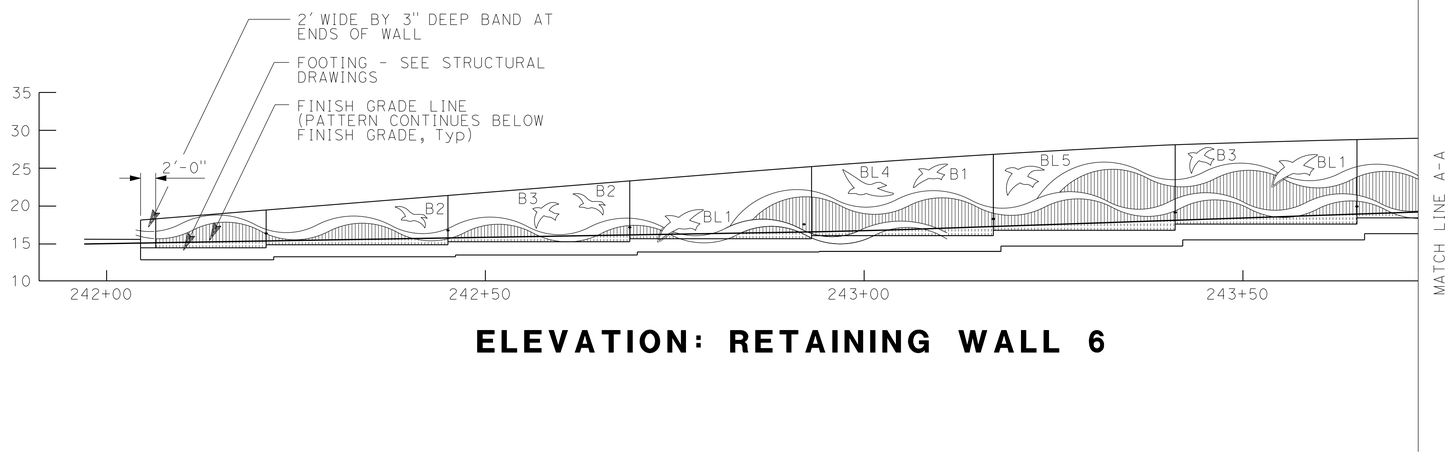

ELEVATION: RETAINING WALL 6

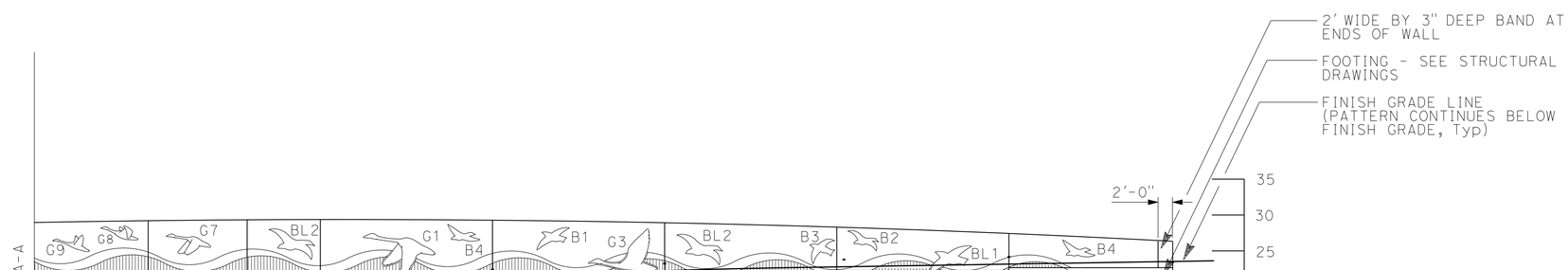

ELEVATION: RETAINING WALL 6

RETAINING WALL DETAILS

R-6

STATE OF CALIFORNIA - DEPARTMENT OF TRANSPORTATION
Caltrans®

CONSULTANT SENIOR LANDSCAPE ARCHITECT: LEAH C. HAYGOOD

CALCULATED-DESIGNED BY: C. SAITO
CHECKED BY: L. HAYGOOD

REVISED BY: CS
DATE REVISED: 7-29-16

LAST REVISION: 11-20-15
DATE PLOTTED => 8/17/2016
TIME PLOTTED => 11:01:36 AM

Dist	COUNTY	ROUTE	POST MILES TOTAL PROJECT	SHEET No.	TOTAL SHEETS
04	CC, Mrn	580	5.0/7.8, 0.0/3.2	577	579

LICENSED LANDSCAPE ARCHITECT

7-29-16
PLANS APPROVAL DATE

LICENSED LANDSCAPE ARCHITECT
CALIFORNIA HAYGOOD No. 3555
Signature
08-31-17
Renewal Date
7-29-16
Date
STATE OF CALIFORNIA

THE STATE OF CALIFORNIA OR ITS OFFICERS OR AGENTS SHALL NOT BE RESPONSIBLE FOR THE ACCURACY OR COMPLETENESS OF SCANNED COPIES OF THIS PLAN SHEET.

HAYGOOD & ASSOCIATES
LANDSCAPE ARCHITECTS
1496 B SOLANO AVENUE
ALBANY, CA 94706

BAY AREA TOLL AUTHORITY
375 BEALE STREET
SUITE 800
SAN FRANCISCO, CA 94105

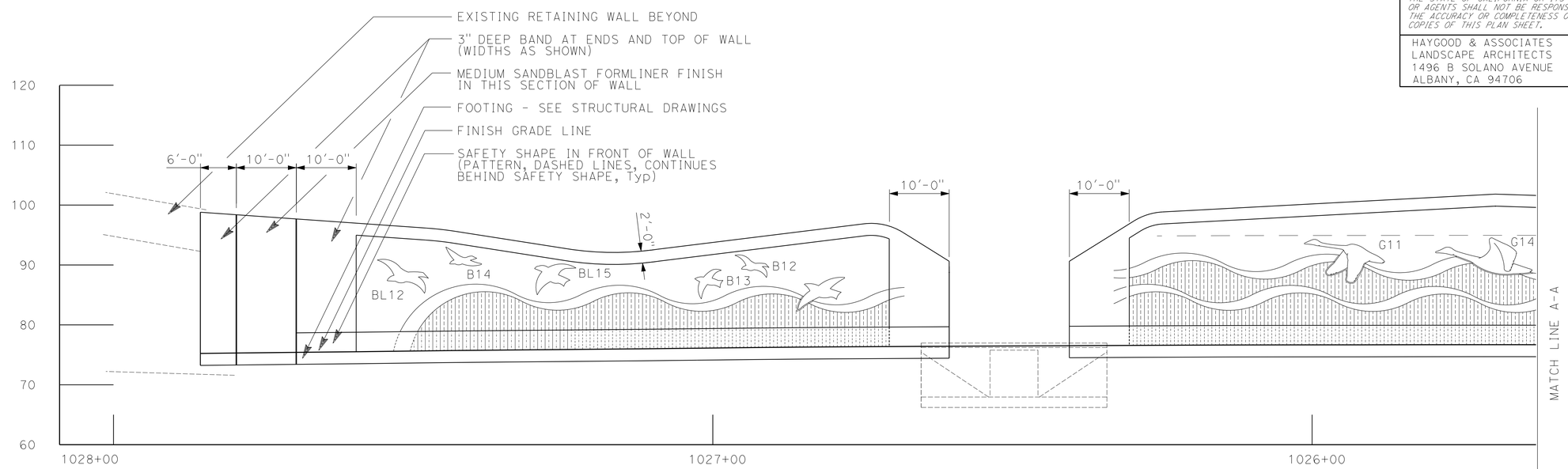

ELEVATION: RETAINING WALL 7

ELEVATION: RETAINING WALL 4

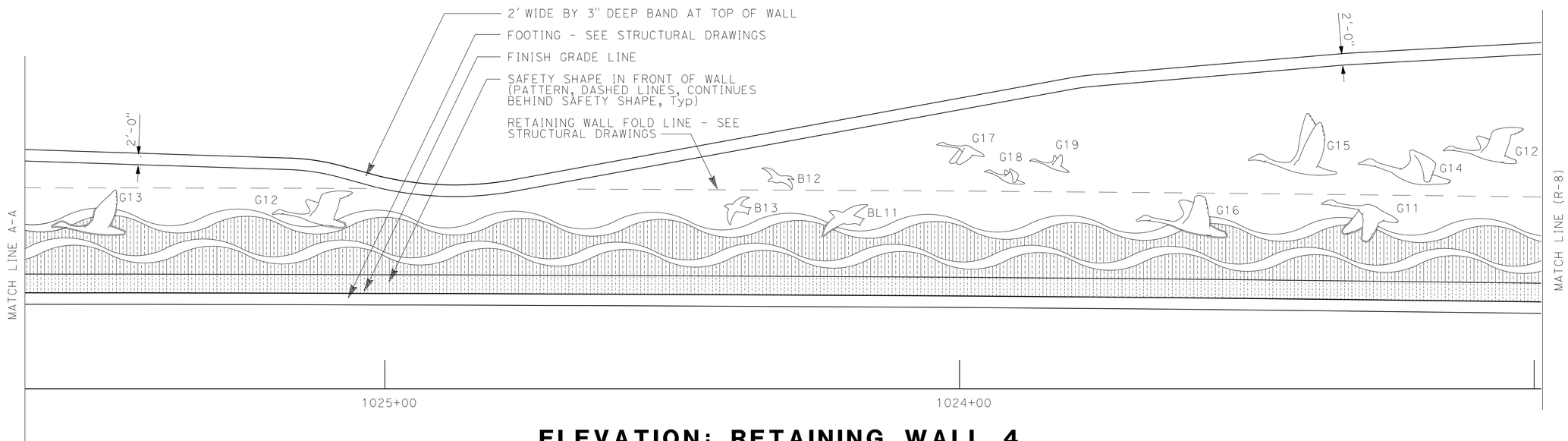

ELEVATION: RETAINING WALL 4

RETAINING WALL DETAILS

R-7

STATE OF CALIFORNIA - DEPARTMENT OF TRANSPORTATION
Caltrans®

CONSULTANT SENIOR LANDSCAPE ARCHITECT: LEAH C. HAYGOOD

CALCULATED-DESIGNED BY: C. SAITO
CHECKED BY: L. HAYGOOD
REVISED BY: CS
DATE REVISED: 7-29-16

LAST REVISION 11-20-15
DATE PLOTTED => 8/17/2016
TIME PLOTTED => 11:01:39 AM

Dist	COUNTY	ROUTE	POST MILES TOTAL PROJECT	SHEET No.	TOTAL SHEETS
04	CC, Mrn	580	5.0/7.8, 0.0/3.2	578	579

LICENSED LANDSCAPE ARCHITECT

7-29-16
PLANS APPROVAL DATE

LICENSED LANDSCAPE ARCHITECT
CALIFORNIA HAYGOOD No. 3594
Signature
08-31-17
Renewal Date
7-29-16
Date
STATE OF CALIFORNIA

THE STATE OF CALIFORNIA OR ITS OFFICERS OR AGENTS SHALL NOT BE RESPONSIBLE FOR THE ACCURACY OR COMPLETENESS OF SCANNED COPIES OF THIS PLAN SHEET.

HAYGOOD & ASSOCIATES
LANDSCAPE ARCHITECTS
1496 B SOLANO AVENUE
ALBANY, CA 94706

BAY AREA TOLL AUTHORITY
375 BEALE STREET
SUITE 800
SAN FRANCISCO, CA 94105

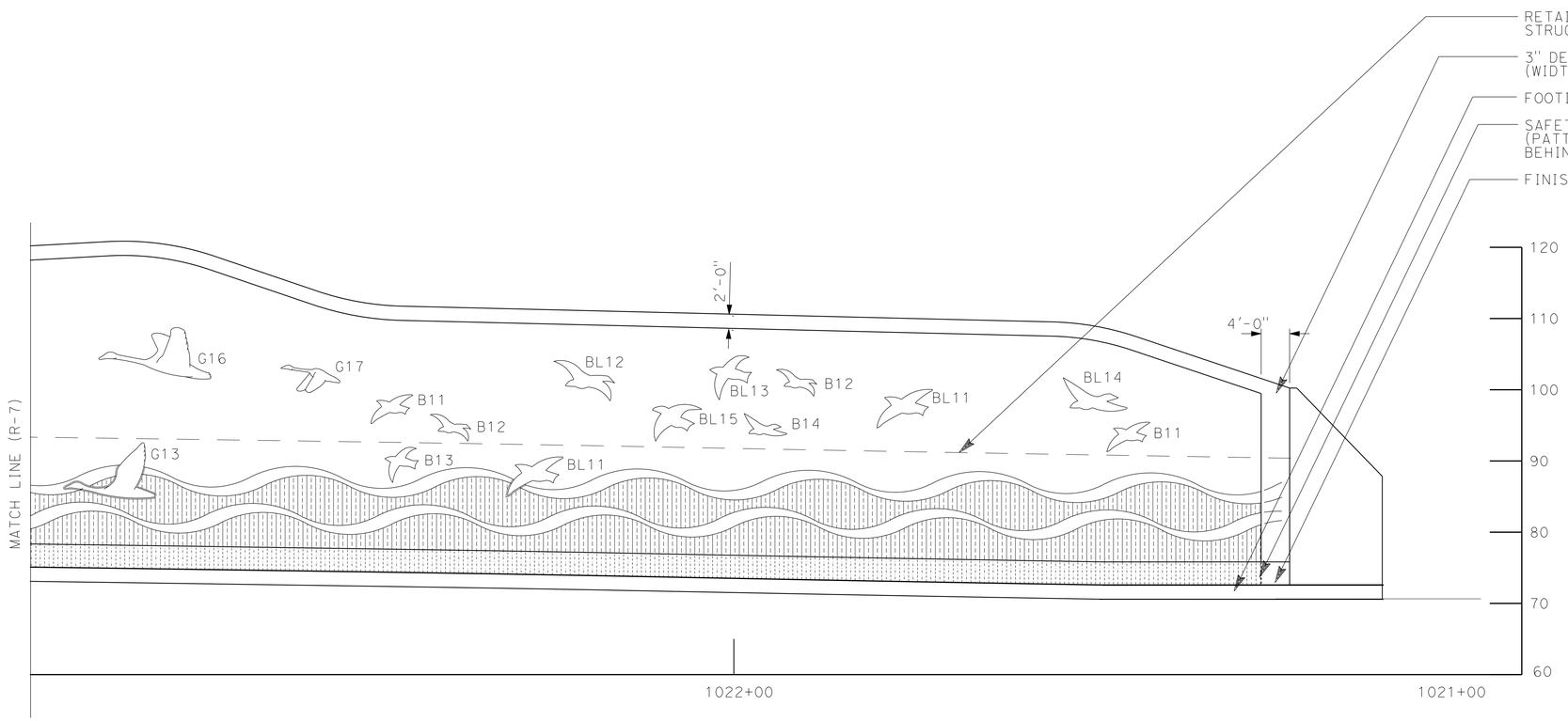

ELEVATION: RETAINING WALL 4

RETAINING WALL DETAILS

R-8

STATE OF CALIFORNIA - DEPARTMENT OF TRANSPORTATION
Caltrans

CONSULTANT SENIOR LANDSCAPE ARCHITECT: LEAH C. HAYGOOD

CALCULATED-DESIGNED BY: C. SAITO
CHECKED BY: L. HAYGOOD

REVISED BY: CS
DATE REVISED: 7-29-16

LAST REVISION 11-20-15
DATE PLOTTED => 8/17/2016
TIME PLOTTED => 11:01:43 AM

Dist	COUNTY	ROUTE	POST MILES TOTAL PROJECT	SHEET No.	TOTAL SHEETS
04	CC, Mrn	580	5.0/7.8, 0.0/3.2	579	579

LICENSED LANDSCAPE ARCHITECT

7-29-16
PLANS APPROVAL DATE

LICENSED LANDSCAPE ARCHITECT
CALIFORNIA HAYGOOD No. 3594
Signature
08-31-17
Renewal Date
7-29-16
Date
STATE OF CALIFORNIA

THE STATE OF CALIFORNIA OR ITS OFFICERS OR AGENTS SHALL NOT BE RESPONSIBLE FOR THE ACCURACY OR COMPLETENESS OF SCANNED COPIES OF THIS PLAN SHEET.

HAYGOOD & ASSOCIATES
LANDSCAPE ARCHITECTS
1496 B SOLANO AVENUE
ALBANY, CA 94706

BAY AREA TOLL AUTHORITY
375 BEALE STREET
SUITE 800
SAN FRANCISCO, CA 94105

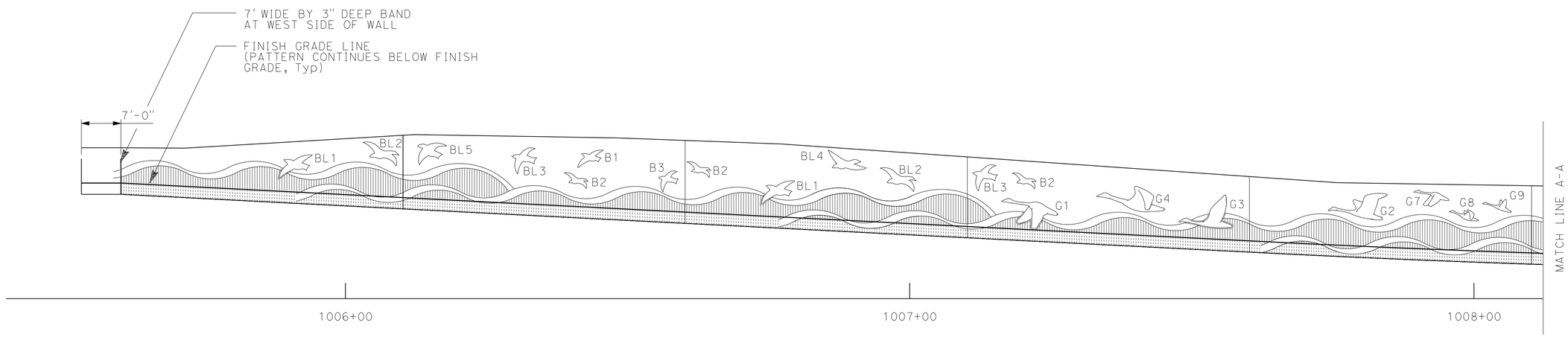

ELEVATION: RETAINING WALL 5

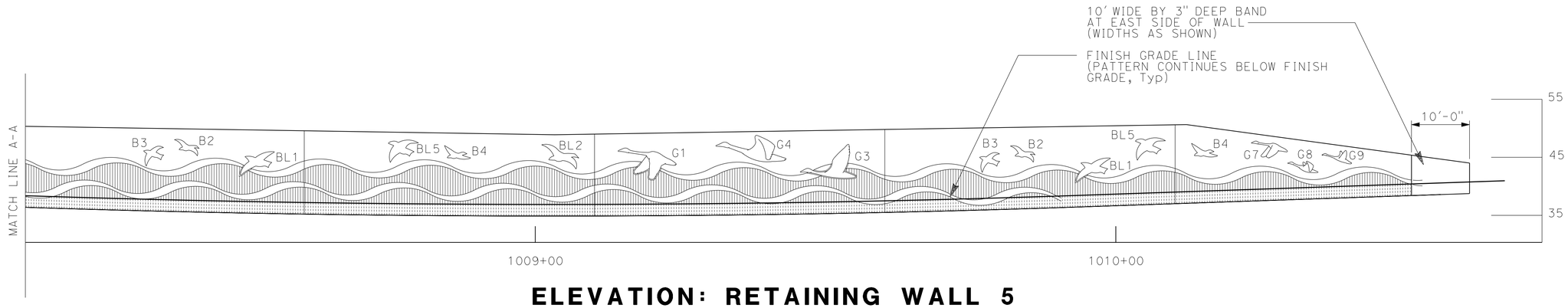

ELEVATION: RETAINING WALL 5

RETAINING WALL DETAILS

R-9

STATE OF CALIFORNIA - DEPARTMENT OF TRANSPORTATION
Caltrans®

CONSULTANT SENIOR LANDSCAPE ARCHITECT
LEAH C. HAYGOOD

CALCULATED-DESIGNED BY C. SAITO
CHECKED BY L. HAYGOOD

REVISED BY CS
DATE REVISED 7-29-16

LAST REVISION 11-20-15
DATE PLOTTED => 8/17/2016
TIME PLOTTED => 11:01:46 AM