M

Maint	MAINTENANCE
Max	MAXIMUM
MB	METAL BEAM
MBB	METAL BEAM BARRIER
MBGR	METAL BEAM GUARD RAILING
Med	MEDIAN
MGS	MIDWEST GUARDRAIL SYSTEM
MH	MANHOLE
Min	MINIMUM
Misc	MISCELLANEOUS
Misc I & S	MISCELLANEOUS IRON AND STEEL
Mkr	MARKER
Mod	MODIFIED, MODIFY
Mon	MONUMENT
MP	METAL PLATE
MPGR	METAL PLATE GUARD RAILING
MR	MOVEMENT RATING
MSE	MECHANICALLY STABILIZED EMBANKMENT
Mt	MOUNTAIN, MOUNT
Mtl	MATERIAL
MVP	MAINTENANCE VEHICLE PULLOUT

N

N	NORTH
NB	NORTHBOUND
No.	NUMBER (MUST HAVE PERIOD)
Nos.	NUMBERS (MUST HAVE PERIOD)
NPS	NOMINAL PIPE SIZE
NS	NEAR SIDE
NSP	NEW STANDARD PLAN
NTS	NOT TO SCALE

O

Oblr	OBLITERATE
OC	OVERCROSSING
OD	OUTSIDE DIAMETER
OF	OUTSIDE FACE
OG	ORIGINAL GROUND
OGAC	OPEN GRADED ASPHALT CONCRETE
OGFC	OPEN GRADED FRICTION COURSE
OH	OVERHEAD
OHWM	ORDINARY HIGH WATER MARK
O-O	OUT TO OUT
Opp	OPPOSITE
OSD	OVERSIDE DRAIN

P

p	PAGE
PAP	PERFORATED ALUMINUM PIPE
PB	PULL BOX
PC	POINT OF CURVATURE, PRECAST
PCC	POINT OF COMPOUND CURVE, PORTLAND CEMENT CONCRETE
PCMS	PORTABLE CHANGEABLE MESSAGE SIGN
PCP	PERFORATED CONCRETE PIPE, PRESTRESSED CONCRETE PIPE
PCVC	POINT OF COMPOUND VERTICAL CURVE
PEC	PERMIT TO ENTER AND CONSTRUCT
Ped	PEDESTRIAN
Ped OC	PEDESTRIAN OVERCROSSING
Ped UC	PEDESTRIAN UNDERCROSSING
Perm Mtl	PERMEABLE MATERIAL

P continued

PG	PROFILE GRADE
PI	POINT OF INTERSECTION
PJP	PARTIAL JOINT PENETRATION
Pkwy	PARKWAY
ℙ,PL	PLATE
P/L	PROPERTY LINE
PM	POST MILE, TIME FROM NOON TO MIDNIGHT
PN	PAVING NOTCH
POC	POINT OF HORIZONTAL CURVE
POT	POINT OF TANGENT
POVC	POINT OF VERTICAL CURVE
PP	PIPE PILE, PLASTIC PIPE, POWER POLE
PPL	PREFORMED PERMEABLE LINER
PPP	PERFORATED PLASTIC PIPE
PRC	POINT OF REVERSE CURVE
PRF	PAVEMENT REINFORCING FABRIC
PRVC	POINT OF REVERSE VERTICAL CURVE
PS&E	PLANS, SPECIFICATIONS AND ESTIMATES
PS, P/S	PRESTRESSED
PSP	PERFORATED STEEL PIPE
PT	POINT OF TANGENCY
PVC	POLYVINYL CHLORIDE
Pvmt	PAVEMENT

Q

Qty	QUANTITY

R

R	RADIUS
R & D	REMOVE AND DISPOSE
R & S	REMOVE AND SALVAGE
R/C	RATE OF CHANGE
RCA	REINFORCED CONCRETE ARCH
RCB	REINFORCED CONCRETE BOX
RCP	REINFORCED CONCRETE PIPE
RCPA	REINFORCED CONCRETE PIPE ARCH
Rd	ROAD
Reinf	REINFORCED, REINFORCEMENT, REINFORCING
Rel	RELOCATE
Repl	REPLACEMENT
Ret	RETAINING
Rev	REVISED, REVISION
Rdwy	ROADWAY
RHMA	RUBBERIZED HOT MIX ASPHALT
Riv	RIVER
RM	ROAD-MIXED
RP	RADIUS POINT, REFERENCE POINT
RR	RAILROAD
RSP	ROCK SLOPE PROTECTION, REVISED STANDARD PLAN
Rt	RIGHT
Rte	ROUTE
RW	REDWOOD, RETAINING WALL
R/W	RIGHT OF WAY
Rwy	RAILWAY

S

S	SOUTH, SUPPLEMENT
SAE	STRUCTURE APPROACH EMBANKMENT
Salv	SALVAGE
SAPP	STRUCTURAL ALUMINUM PLATE PIPE
SB	SOUTHBOUND
SC	SAND CUSHION
SCSP	SLOTTED CORRUGATED STEEL PIPE
SD	STORM DRAIN
Sec	SECOND, SECTION
Sep	SEPARATION
SG	SUBGRADE
Shld	SHOULDER
Sht	SHEET
Sim	SIMILAR
$	STATION LINE
SM	SELECTED MATERIAL
Spec	SPECIAL, SPECIFICATIONS
SPP	SLOTTED PLASTIC PIPE
SS	SLOPE STAKE
SSBM	STRAP AND SADDLE BRACKET METHOD
SSD	STRUCTURAL SECTION DRAIN
SSPA	STRUCTURAL STEEL PLATE ARCH
SSPP	STRUCTURAL STEEL PLATE PIPE
SSPPA	STRUCTURAL STEEL PLATE PIPE ARCH
SSRP	STEEL SPIRAL RIB PIPE
St	STREET
Sta	STATION
STBB	SINGLE THRIE BEAM BARRIER
Std	STANDARD
Str	STRUCTURE
Surf	SURFACING
SW	SIDEWALK, SOUND WALL
Swr	SEWER
Sym	SYMMETRICAL
S4S	SURFACE 4 SIDES

T

T	SEMI-TANGENT
Tan	TANGENT
TBB	THRIE BEAM BARRIER
Tbr	TIMBER
TC	TOP OF CURB
TCB	TRAFFIC CONTROL BOX
TCE	TEMPORARY CONSTRUCTION EASEMENT
Tel	TELEPHONE
Temp	TEMPORARY
TG	TOP OF GRADE
Tot	TOTAL
TP	TELEPHONE POLE
TPB	TREATED PERMEABLE BASE
TPM	TREATED PERMEABLE MATERIAL
Trans	TRANSITION

T continued

TS	TRANSVERSE, TRAFFIC SIGNAL, TUBULAR STEEL
Typ	TYPICAL

U

UC	UNDERCROSSING
UD	UNDERDRAIN
UG	UNDERGROUND
UON	UNLESS OTHERWISE NOTED
UP	UNDERPASS

V

V	VALVE, DESIGN SPEED
Var	VARIABLE, VARIES
VC	VERTICAL CURVE
VCP	VITRIFIED CLAY PIPE
Vert	VERTICAL
Via	VIADUCT
Vol	VOLUME

W

W	WEST, WIDTH
WB	WESTBOUND
WH	WEEP HOLE
WM	WIRE MESH
WS	WATER SURFACE
WSP	WELDED STEEL PIPE
Wt	WEIGHT
WV	WATER VALVE
WW	WINGWALL
WWLOL	WINGWALL LAYOUT LINE

X

X Sec	CROSS SECTION
Xing	CROSSING

Y

Yr	YEAR
Yrs	YEARS

Dist	COUNTY	ROUTE	POST MILES TOTAL PROJECT	SHEET No.	TOTAL SHEETS
04	CC/Mrn	580	5.0/7.8, 0.0/3.3	387	579

Grace M. Tsushima
REGISTERED CIVIL ENGINEER

July 19, 2013
PLANS APPROVAL DATE

REGISTERED PROFESSIONAL ENGINEER Grace M. Tsushima No. C49814 Exp. 9-30-14 CIVIL STATE OF CALIFORNIA

THE STATE OF CALIFORNIA OR ITS OFFICERS OR AGENTS SHALL NOT BE RESPONSIBLE FOR THE ACCURACY OR COMPLETENESS OF SCANNED COPIES OF THIS PLAN SHEET.

TO ACCOMPANY PLANS DATED _____

UNIT OF MEASUREMENT SYMBOLS:

Some of the symbols used in the project plan quantity tables and in the Bid Item List are:

TABLE A

SYMBOL USED	DEFINITIONS
ACRE	ACRE
CF	CUBIC FOOT
CY	CUBIC YARD
EA	EACH
GAL	GALLON
LB	POUND
LF	LINEAR FOOT
SQFT	SQUARE FOOT
SQYD	SQUARE YARD
STA	100 FEET
TAB	TABLET
TON	2,000 POUNDS

Some of the symbols used in the plans other than in the project plan quantity tables are:

TABLE B

SYMBOL USED	DEFINITIONS
ksi	KIPS PER SQUARE INCH
ksf	KIPS PER SQUARE FOOT
psi	POUNDS PER SQUARE INCH
psf	POUNDS PER SQUARE FOOT
lb/ft^3, pcf	POUNDS PER CUBIC FOOT
tsf	TONS PER SQUARE FOOT
mph, MPH *	MILES PER HOUR
ø	NOMINAL DIAMETER
oz	OUNCE
lb	POUND
kip	1,000 POUNDS
cal	CALORIE
ft	FOOT OR FEET
gal	GALLON

* For use on a sign panel only

STATE OF CALIFORNIA
DEPARTMENT OF TRANSPORTATION

ABBREVIATIONS (SHEET 2 OF 2)

NO SCALE

RSP A10B DATED JULY 19, 2013 SUPERSEDES STANDARD PLAN A10B DATED MAY 20, 2011 - PAGE 2 OF THE STANDARD PLANS BOOK DATED 2010.

REVISED STANDARD PLAN RSP A10B

2010 REVISED STANDARD PLAN RSP A10B

6-7-13

REFERENCE: CALTRANS SOIL & ROCK LOGGING, CLASSIFICATION, AND PRESENTATION MANUAL (2010)

Dist	COUNTY	ROUTE	POST MILES TOTAL PROJECT	SHEET No.	TOTAL SHEETS
04	CC/Mrn	580	5.0/7.8, 0.0/3.3	388	579

CERTIFIED ENGINEERING GEOLOGIST

October 30, 2015
PLANS APPROVAL DATE

REGISTERED GEOLOGIST — CHRIS A. RISDEN — CERTIFIED ENGINEERING GEOLOGIST — No. 2541 Exp. 2-30-17 — STATE OF CALIFORNIA

THE STATE OF CALIFORNIA OR ITS OFFICERS OR AGENTS SHALL NOT BE RESPONSIBLE FOR THE ACCURACY OR COMPLETENESS OF SCANNED COPIES OF THIS PLAN SHEET.

TO ACCOMPANY PLANS DATED _____

ABBREVIATION:

GWS = Ground Water Surface

CEMENTATION

DESCRIPTION	CRITERIA
WEAK	CRUMBLES OR BREAKS WITH HANDLING OR LITTLE FINGER PRESSURE.
MODERATE	CRUMBLES OR BREAKS WITH CONSIDERABLE FINGER PRESSURE.
STRONG	WILL NOT CRUMBLE OR BREAK WITH FINGER PRESSURE.

BOREHOLE IDENTIFICATION

SYMBOL	HOLE TYPE	DESCRIPTION
Size	A	AUGER BORING (HOLLOW OR SOLID STEM BUCKET)
Size	R RW RC P	ROTARY DRILLED BORING (CONVENTIONAL) ROTARY DRILLED WITH SELF-CASING WIRE-LINE ROTARY CORE WITH CONTINUOUSLY-SAMPLED, SELF-CASING WIRE-LINE ROTARY PERCUSSION BORING (AIR)
Size	R RC	ROTARY DRILLED DIAMOND CORE ROTARY DRILLED DIAMOND CORE, CONTINUOUSLY SAMPLED
Size	HD HA	HAND DRIVEN (1-INCH SOIL TUBE) HAND AUGER
●	D	DYNAMIC CONE PENETRATION BORING
▲	CPT	CONE PENETRATION TEST (ASTM D 5778)
⛶	O	OTHER (NOTE ON LOTB)

Note: Size in inches.

CONSISTENCY OF COHESIVE SOILS

DESCRIPTION	SHEAR STRENGTH (tsf)	POCKET PENETROMETER MEASUREMENT, PP, (tsf)	TORVANE MEASUREMENT, TV, (tsf)	VANE SHEAR MEASUREMENT, VS, (tsf)
VERY SOFT	LESS THAN 0.12	LESS THAN 0.25	LESS THAN 0.12	LESS THAN 0.12
SOFT	0.12 - 0.25	0.25 - 0.5	0.12 - 0.25	0.12 - 0.25
MEDIUM STIFF	0.25 - 0.5	0.5 - 1	0.25 - 0.5	0.25 - 0.5
STIFF	0.5 - 1	1 - 2	0.5 - 1	0.5 - 1
VERY STIFF	1 - 2	2 - 4	1 - 2	1 - 2
HARD	GREATER THAN 2	GREATER THAN 4	GREATER THAN 2	GREATER THAN 2

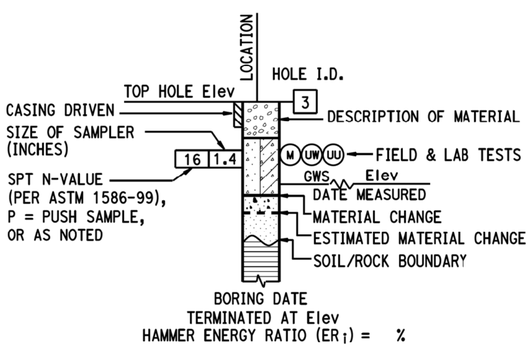

ROTARY BORING

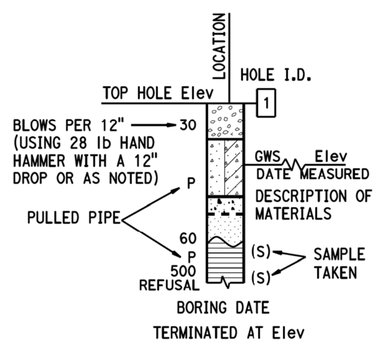

HAND BORING

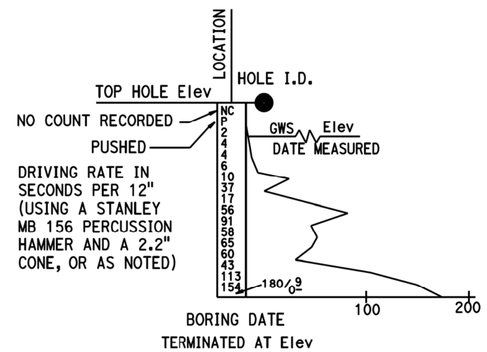

DYNAMIC CONE PENETRATION BORING

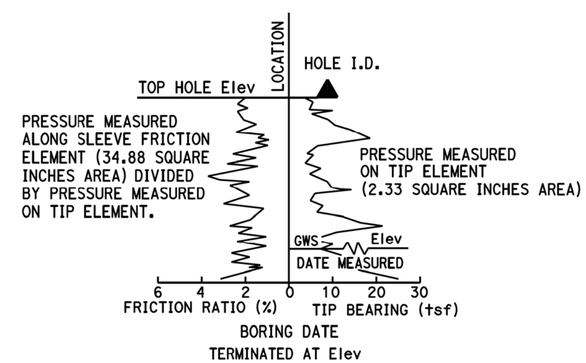

CONE PENETRATION TEST (CPT) BORING

STATE OF CALIFORNIA
DEPARTMENT OF TRANSPORTATION

LEGEND - SOIL (SHEET 1 OF 2)

NO SCALE

RSP A10F DATED OCTOBER 30, 2015 SUPERSEDES STANDARD PLAN A10F DATED MAY 20, 2011 - PAGE 6 OF THE STANDARD PLANS BOOK DATED 2010.

REVISED STANDARD PLAN RSP A10F

2010 REVISED STANDARD PLAN RSP A10F

8-18-15

REFERENCE: CALTRANS SOIL & ROCK LOGGING, CLASSIFICATION, AND PRESENTATION MANUAL (2010)

Dist	COUNTY	ROUTE	POST MILES TOTAL PROJECT	SHEET No.	TOTAL SHEETS
04	CC/Mrn	580	5.0/7.8, 0.0/3.3	389	579

CERTIFIED ENGINEERING GEOLOGIST

October 30, 2015
PLANS APPROVAL DATE

REGISTERED GEOLOGIST — CHRIS A. RISDEN — CERTIFIED ENGINEERING GEOLOGIST No. 2541 Exp. 12-30-17 — STATE OF CALIFORNIA

THE STATE OF CALIFORNIA OR ITS OFFICERS OR AGENTS SHALL NOT BE RESPONSIBLE FOR THE ACCURACY OR COMPLETENESS OF SCANNED COPIES OF THIS PLAN SHEET.

TO ACCOMPANY PLANS DATED _____

GROUP SYMBOLS AND NAMES

GRAPHIC/SYMBOL	GROUP NAMES
GW	WELL-GRADED GRAVEL WELL-GRADED GRAVEL WITH SAND
GP	POORLY-GRADED GRAVEL POORLY-GRADED GRAVEL WITH SAND
GW-GM	WELL-GRADED GRAVEL WITH SILT WELL-GRADED GRAVEL WITH SILT AND SAND
GW-GC	WELL-GRADED GRAVEL WITH CLAY (OR SILTY CLAY) WELL-GRADED GRAVEL WITH CLAY AND SAND (OR SILTY CLAY AND SAND)
GP-GM	POORLY-GRADED GRAVEL WITH SILT POORLY-GRADED GRAVEL WITH SILT AND SAND
GP-GC	POORLY-GRADED GRAVEL WITH CLAY (OR SILTY CLAY) POORLY-GRADED GRAVEL WITH CLAY AND SAND (OR SILTY CLAY AND SAND)
GM	SILTY GRAVEL SILTY GRAVEL WITH SAND
GC	CLAYEY GRAVEL CLAYEY GRAVEL WITH SAND
GC-GM	SILTY, CLAYEY GRAVEL SILTY, CLAYEY GRAVEL WITH SAND
SW	WELL-GRADED SAND WELL-GRADED SAND WITH GRAVEL
SP	POORLY-GRADED SAND POORLY-GRADED SAND WITH GRAVEL
SW-SM	WELL-GRADED SAND WITH SILT WELL-GRADED SAND WITH SILT AND GRAVEL
SW-SC	WELL-GRADED SAND WITH CLAY (OR SILTY CLAY) WELL-GRADED SAND WITH CLAY AND GRAVEL (OR SILTY CLAY AND GRAVEL)
SP-SM	POORLY-GRADED SAND WITH SILT POORLY-GRADED SAND WITH SILT AND GRAVEL
SP-SC	POORLY-GRADED SAND WITH CLAY (OR SILTY CLAY) POORLY-GRADED SAND WITH CLAY AND GRAVEL (OR SILTY CLAY AND GRAVEL)
SM	SILTY SAND SILTY SAND WITH GRAVEL
SC	CLAYEY SAND CLAYEY SAND WITH GRAVEL
SC-SM	SILTY, CLAYEY SAND SILTY, CLAYEY SAND WITH GRAVEL
PT	PEAT
	COBBLES COBBLES AND BOULDERS BOULDERS

GRAPHIC/SYMBOL	GROUP NAMES
CL	LEAN CLAY LEAN CLAY WITH SAND LEAN CLAY WITH GRAVEL SANDY LEAN CLAY SANDY LEAN CLAY WITH GRAVEL GRAVELLY LEAN CLAY GRAVELLY LEAN CLAY WITH SAND
CL-ML	SILTY CLAY SILTY CLAY WITH SAND SILTY CLAY WITH GRAVEL SANDY SILTY CLAY SANDY SILTY CLAY WITH GRAVEL GRAVELLY SILTY CLAY GRAVELLY SILTY CLAY WITH SAND
ML	SILT SILT WITH SAND SILT WITH GRAVEL SANDY SILT SANDY SILT WITH GRAVEL GRAVELLY SILT GRAVELLY SILT WITH SAND
OL	ORGANIC LEAN CLAY ORGANIC LEAN CLAY WITH SAND ORGANIC LEAN CLAY WITH GRAVEL SANDY ORGANIC LEAN CLAY SANDY ORGANIC LEAN CLAY WITH GRAVEL GRAVELLY ORGANIC LEAN CLAY GRAVELLY ORGANIC LEAN CLAY WITH SAND
OL	ORGANIC SILT ORGANIC SILT WITH SAND ORGANIC SILT WITH GRAVEL SANDY ORGANIC SILT SANDY ORGANIC SILT WITH GRAVEL GRAVELLY ORGANIC SILT GRAVELLY ORGANIC SILT WITH SAND
CH	FAT CLAY FAT CLAY WITH SAND FAT CLAY WITH GRAVEL SANDY FAT CLAY SANDY FAT CLAY WITH GRAVEL GRAVELLY FAT CLAY GRAVELLY FAT CLAY WITH SAND
MH	ELASTIC SILT ELASTIC SILT WITH SAND ELASTIC SILT WITH GRAVEL SANDY ELASTIC SILT SANDY ELASTIC SILT WITH GRAVEL GRAVELLY ELASTIC SILT GRAVELLY ELASTIC SILT WITH SAND
OH	ORGANIC FAT CLAY ORGANIC FAT CLAY WITH SAND ORGANIC FAT CLAY WITH GRAVEL SANDY ORGANIC FAT CLAY SANDY ORGANIC FAT CLAY WITH GRAVEL GRAVELLY ORGANIC FAT CLAY GRAVELLY ORGANIC FAT CLAY WITH SAND
OH	ORGANIC ELASTIC SILT ORGANIC ELASTIC SILT WITH SAND ORGANIC ELASTIC SILT WITH GRAVEL SANDY ORGANIC ELASTIC SILT SANDY ORGANIC ELASTIC SILT WITH GRAVEL GRAVELLY ORGANIC ELASTIC SILT GRAVELLY ORGANIC ELASTIC SILT WITH SAND
OL/OH	ORGANIC SOIL ORGANIC SOIL WITH SAND ORGANIC SOIL WITH GRAVEL SANDY ORGANIC SOIL SANDY ORGANIC SOIL WITH GRAVEL GRAVELLY ORGANIC SOIL GRAVELLY ORGANIC SOIL WITH SAND

FIELD AND LABORATORY TESTING

- (C) CONSOLIDATION (ASTM D2435)
- (CL) COLLAPSE POTENTIAL (ASTM D4546)
- (CP) COMPACTION CURVE (CTM 216)
- (CR) CORROSIVITY TESTING (CTM 643, CTM 422, CTM 417)
- (CU) CONSOLIDATED UNDRAINED TRIAXIAL (ASTM D4767)
- (DS) DIRECT SHEAR (ASTM D3080)
- (EI) EXPANSION INDEX (ASTM D4829)
- (M) MOISTURE CONTENT (ASTM D2216)
- (OC) ORGANIC CONTENT-% (ASTM D2974)
- (P) PERMEABILITY (CTM 220)
- (PA) PARTICLE SIZE ANALYSIS (ASTM D422)
- (PI) PLASTICITY INDEX (AASHTO T 90) LIQUID LIMIT (AASHTO T 89)
- (PL) POINT LOAD INDEX (ASTM D5731)
- (PM) PRESSURE METER
- (R) R-VALUE (CTM 301)
- (SE) SAND EQUIVALENT (CTM 217)
- (SG) SPECIFIC GRAVITY (AASHTO T 100)
- (SL) SHRINKAGE LIMIT (ASTM D4943)
- (SW) SWELL POTENTIAL (ASTM D4546)
- (UC) UNCONFINED COMPRESSION-SOIL (ASTM D2166) UNCONFINED COMPRESSION-ROCK (ASTM D7012 - METHOD C)
- (UU) UNCONSOLIDATED UNDRAINED TRIAXIAL (ASTM D2850)
- (UW) UNIT WEIGHT (ASTM D7263 - METHOD B)

APPARENT DENSITY OF COHESIONLESS SOILS

DESCRIPTION	SPT N_{60} (BLOWS / 12 INCHES)
VERY LOOSE	0 - 5
LOOSE	5 - 10
MEDIUM DENSE	10 - 30
DENSE	30 - 50
VERY DENSE	GREATER THAN 50

MOISTURE

DESCRIPTION	CRITERIA
DRY	NO DISCERNABLE MOISTURE
MOIST	MOISTURE PRESENT, BUT NO FREE WATER
WET	VISIBLE FREE WATER

PERCENT OR PROPORTION OF SOILS

DESCRIPTION	CRITERIA
TRACE	PARTICLES ARE PRESENT BUT ESTIMATED TO BE LESS THAN 5%
FEW	5% - 10%
LITTLE	15% - 25%
SOME	30% - 45%
MOSTLY	50% - 100%

PARTICLE SIZE

DESCRIPTION		SIZE
BOULDER		GREATER THAN 12"
COBBLE		3" - 12"
GRAVEL	COARSE	¾" - 3"
	FINE	1/5" - ¾"
SAND	COARSE	1/16" - 1/5"
	MEDIUM	1/64" - 1/16"
	FINE	1/300" - 1/64"
SILT AND CLAY		LESS THAN 1/300"

STATE OF CALIFORNIA
DEPARTMENT OF TRANSPORTATION

LEGEND - SOIL (SHEET 2 OF 2)

NO SCALE

RSP A10G DATED OCTOBER 30, 2015 SUPERSEDES STANDARD PLAN A10G DATED MAY 20, 2011 - PAGE 7 OF THE STANDARD PLANS BOOK DATED 2010.

REVISED STANDARD PLAN RSP A10G

2010 REVISED STANDARD PLAN RSP A10G

9-22-15

Dist	COUNTY	ROUTE	POST MILES TOTAL PROJECT	SHEET No.	TOTAL SHEETS
04	CC/Mrn	580	5.0/7.8, 0.0/3.3	390	579

REGISTERED CIVIL ENGINEER

July 19, 2013
PLANS APPROVAL DATE

REGISTERED PROFESSIONAL ENGINEER Roberta L. McLaughlin No. C40375 Exp. 3-31-15 CIVIL STATE OF CALIFORNIA

THE STATE OF CALIFORNIA OR ITS OFFICERS OR AGENTS SHALL NOT BE RESPONSIBLE FOR THE ACCURACY OR COMPLETENESS OF SCANNED COPIES OF THIS PLAN SHEET.

TO ACCOMPANY PLANS DATED _____

2010 REVISED STANDARD PLAN RSP A20C

EXIT RAMP NEUTRAL AREA (GORE) TREATMENT

DETAIL 36

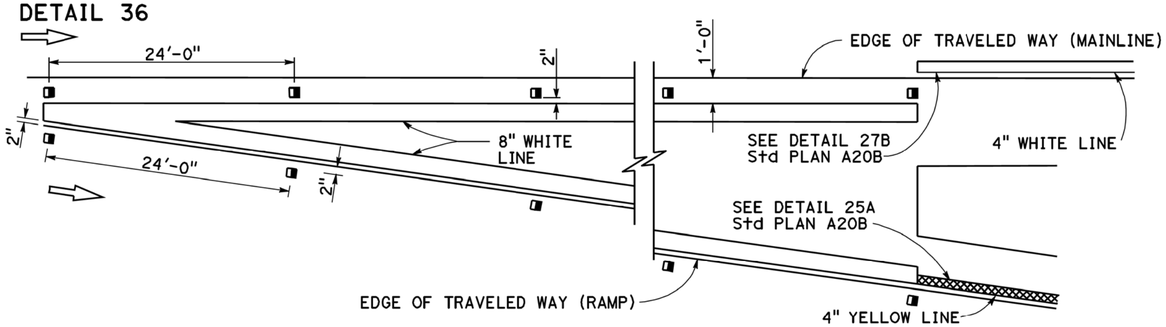

ENTRANCE RAMP NEUTRAL AREA (MERGE) TREATMENT

DETAIL 36A

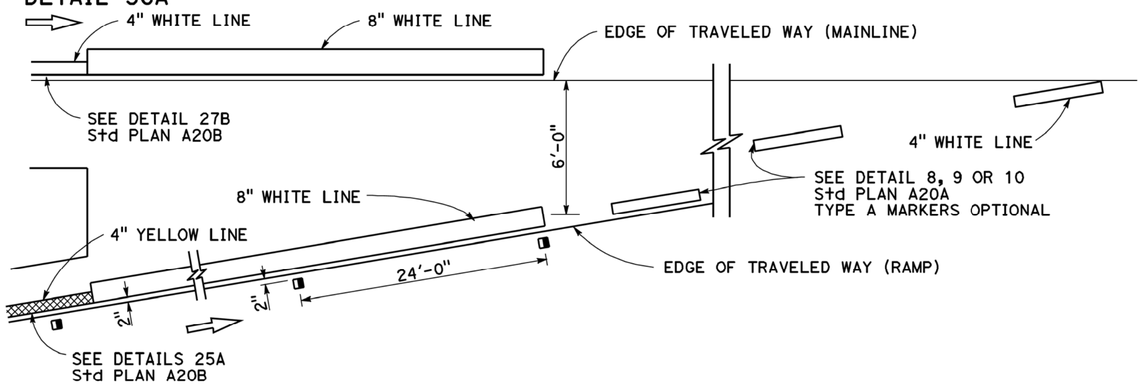

ENTRANCE RAMP NEUTRAL AREA (ACCELERATION LANE) TREATMENT

DETAIL 36B

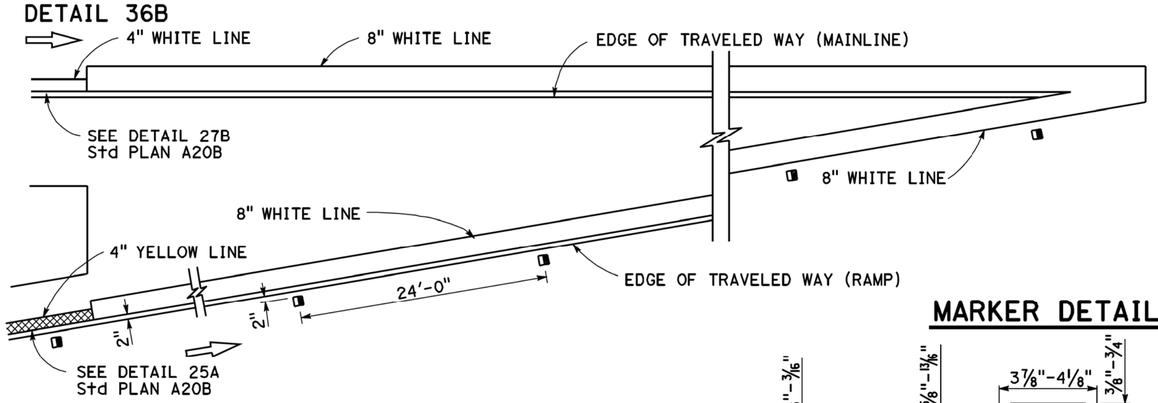

LANE DROP AT EXIT RAMPS

DETAIL 37

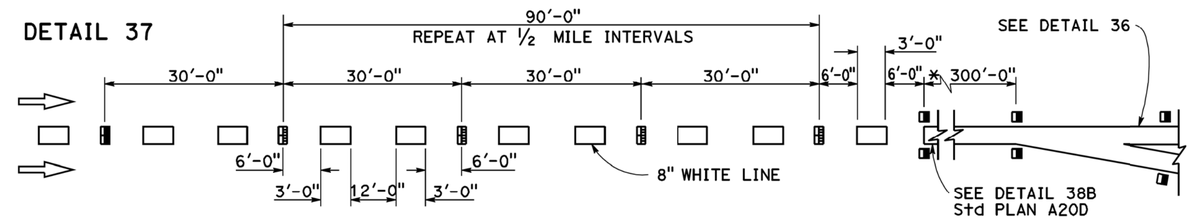

DETAIL 37A

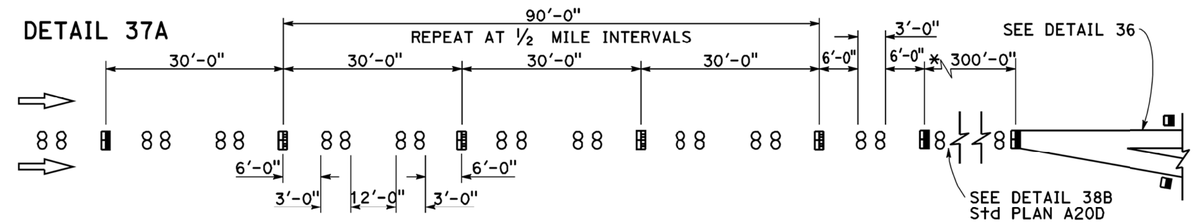

* The solid channelizing line shown may be omitted on short auxiliary lanes where weaving length is critical.

LANE DROP AT INTERSECTIONS

DETAIL 37B

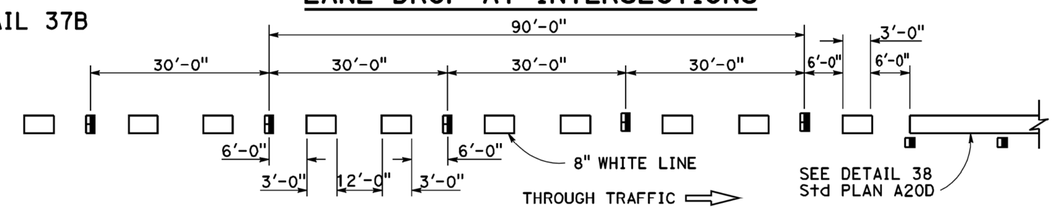

DETAIL 37C

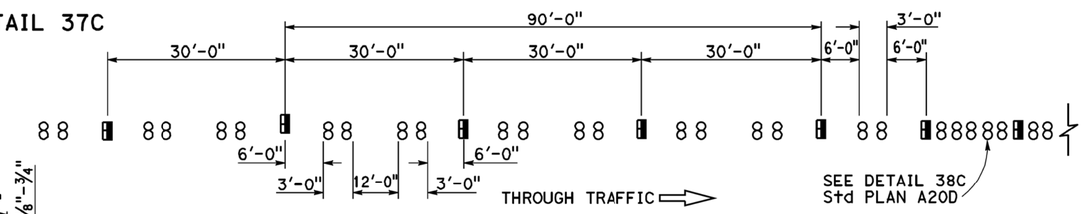

MARKER DETAILS

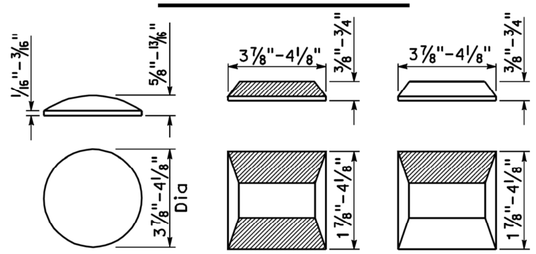

RETROREFLECTIVE FACE

LEGEND:

MARKERS

- ○ TYPE A WHITE NON-REFLECTIVE
- ⊞ TYPE C RED-CLEAR RETROREFLECTIVE
- ◨ TYPE G ONE-WAY CLEAR RETROREFLECTIVE

STATE OF CALIFORNIA
DEPARTMENT OF TRANSPORTATION

PAVEMENT MARKERS AND TRAFFIC LINE TYPICAL DETAILS

NO SCALE

RSP A20C DATED JULY 19, 2013 SUPERSEDES STANDARD PLAN A20C DATED MAY 20, 2011 - PAGE 11 OF THE STANDARD PLANS BOOK DATED 2010.

REVISED STANDARD PLAN RSP A20C

4-29-13

Dist	COUNTY	ROUTE	POST MILES TOTAL PROJECT	SHEET No.	TOTAL SHEETS
04	CC/Mrn	580	5.0/7.8, 0.0/3.3	391	579

REGISTERED CIVIL ENGINEER

April 20, 2012
PLANS APPROVAL DATE

REGISTERED PROFESSIONAL ENGINEER
Roberta L. McLaughlin
No. C40375
Exp. 3-31-13
CIVIL
STATE OF CALIFORNIA

THE STATE OF CALIFORNIA OR ITS OFFICERS OR AGENTS SHALL NOT BE RESPONSIBLE FOR THE ACCURACY OR COMPLETENESS OF SCANNED COPIES OF THIS PLAN SHEET.

TO ACCOMPANY PLANS DATED _____

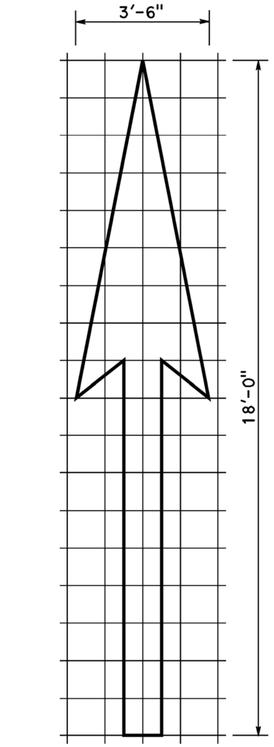

A=25 ft^2

TYPE I 18'-0" ARROW

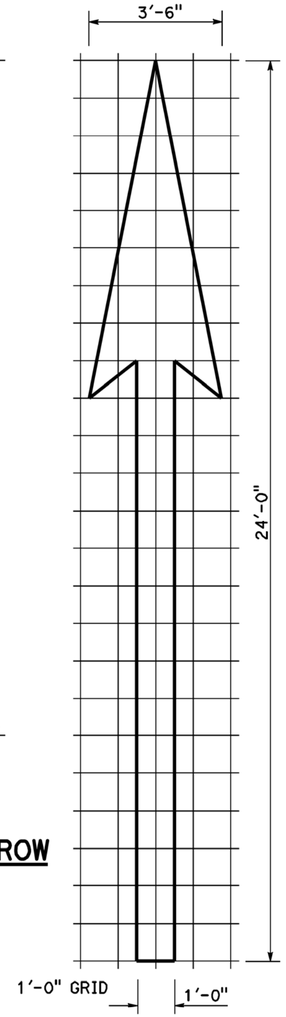

A=31 ft^2

TYPE I 24'-0" ARROW

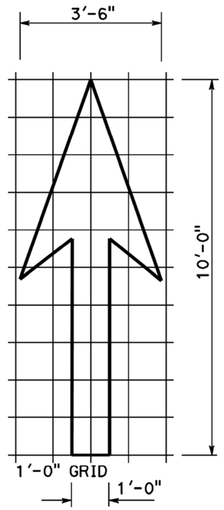

A=14 ft^2

TYPE I 10'-0" ARROW

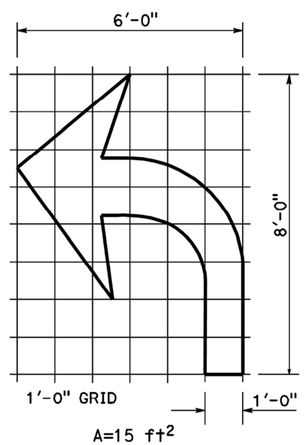

A=15 ft^2

TYPE IV (L) ARROW

(For Type IV (R) arrow, use mirror image)

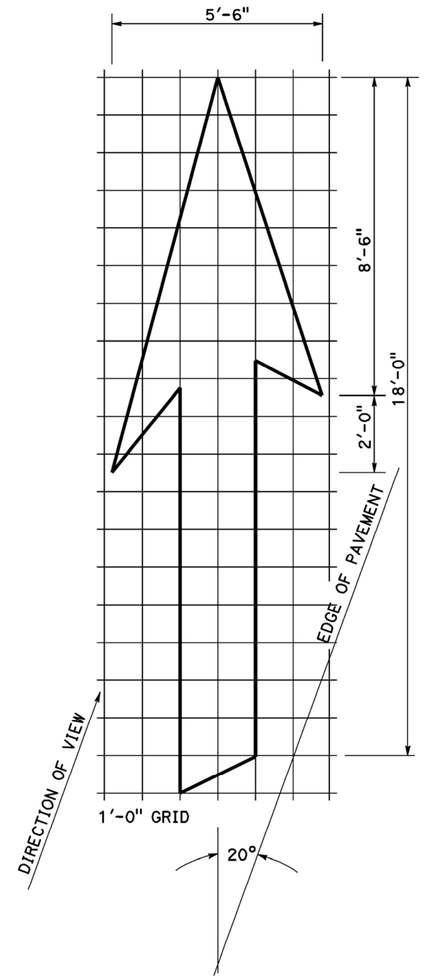

A=42 ft^2

TYPE VI ARROW

Right lane drop arrow (For left lane, use mirror image)

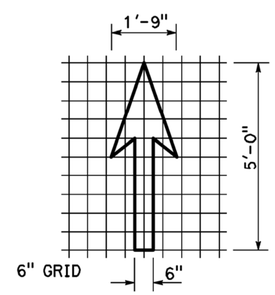

A=3.5 ft^2

BIKE LANE ARROW

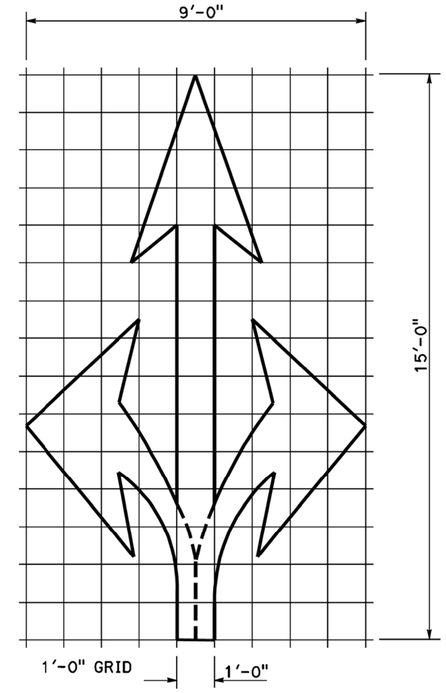

A=36 ft^2

TYPE VIII ARROW

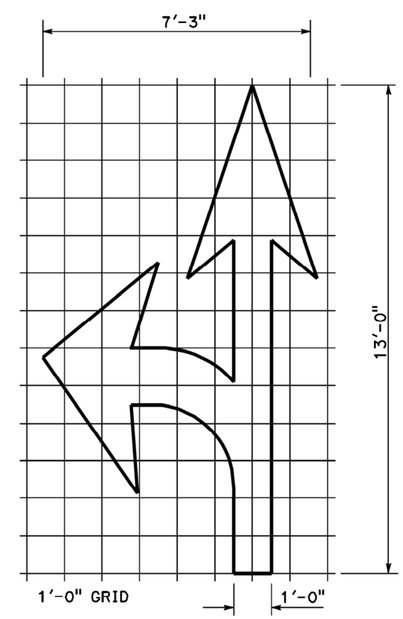

A=27 ft^2

TYPE VII (L) ARROW

(For Type VII (R) arrow, use mirror image)

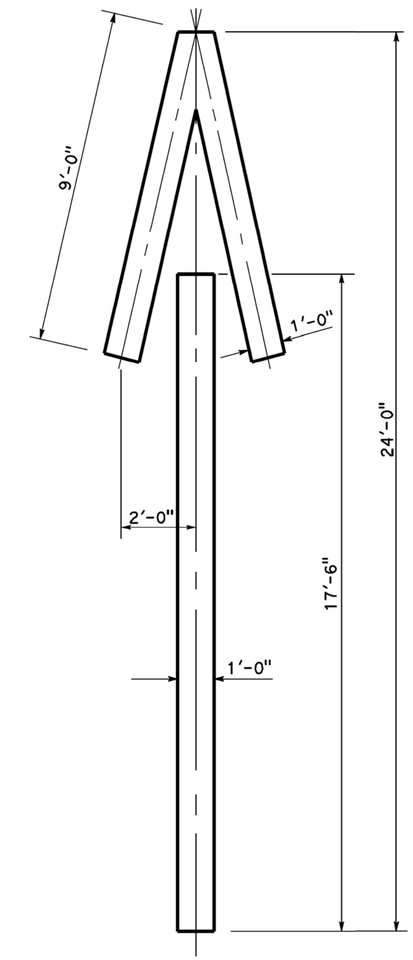

A=33 ft^2

TYPE V ARROW

NOTE:
Minor variations in dimensions may be accepted by the Engineer.

STATE OF CALIFORNIA
DEPARTMENT OF TRANSPORTATION

PAVEMENT MARKINGS ARROWS

NO SCALE

RSP A24A DATED APRIL 20, 2012 SUPERSEDES STANDARD PLAN A24A DATED MAY 20, 2011 - PAGE 13 OF THE STANDARD PLANS BOOK DATED 2010.

REVISED STANDARD PLAN RSP A24A

2010 REVISED STANDARD PLAN RSP A24A

3-14-12

Dist	COUNTY	ROUTE	POST MILES TOTAL PROJECT	SHEET No.	TOTAL SHEETS
04	CC/Mrn	580	5.0/7.8, 0.0/3.3	392	579

REGISTERED CIVIL ENGINEER

October 19, 2012
PLANS APPROVAL DATE

REGISTERED PROFESSIONAL ENGINEER Roberta L. McLaughlin No. C40375 Exp. 3-31-13 CIVIL STATE OF CALIFORNIA

THE STATE OF CALIFORNIA OR ITS OFFICERS OR AGENTS SHALL NOT BE RESPONSIBLE FOR THE ACCURACY OR COMPLETENESS OF SCANNED COPIES OF THIS PLAN SHEET.

NOTE: TO ACCOMPANY PLANS DATED _____

Minor variations in dimensions may be accepted by the Engineer.

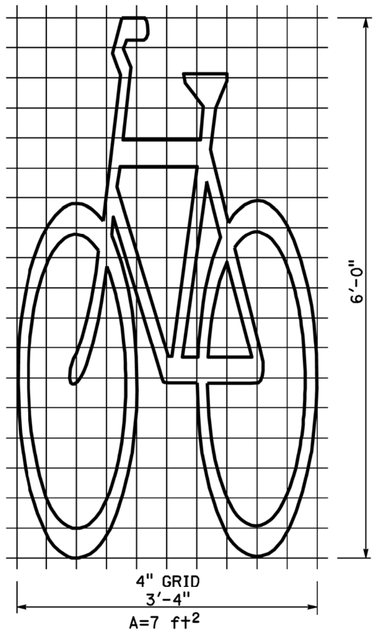

BIKE LANE SYMBOL WITHOUT PERSON

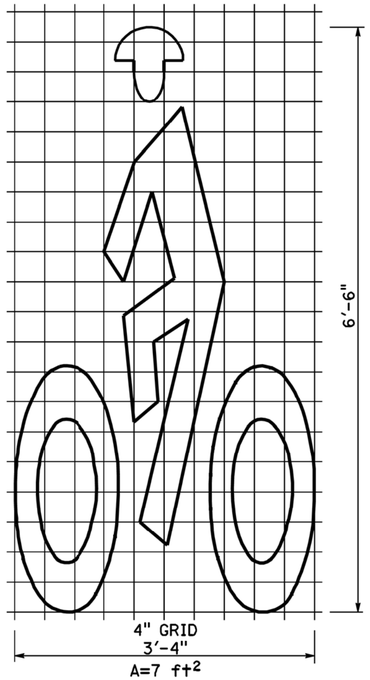

BIKE LANE SYMBOL WITH PERSON

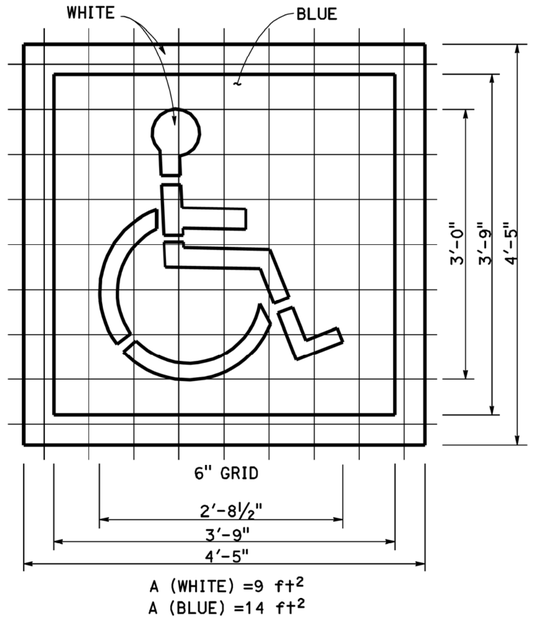

INTERNATIONAL SYMBOL OF ACCESSIBILITY (ISA) MARKING

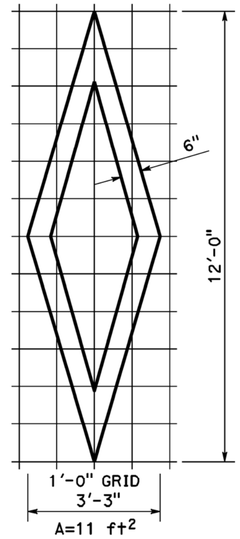

DIAMOND SYMBOL

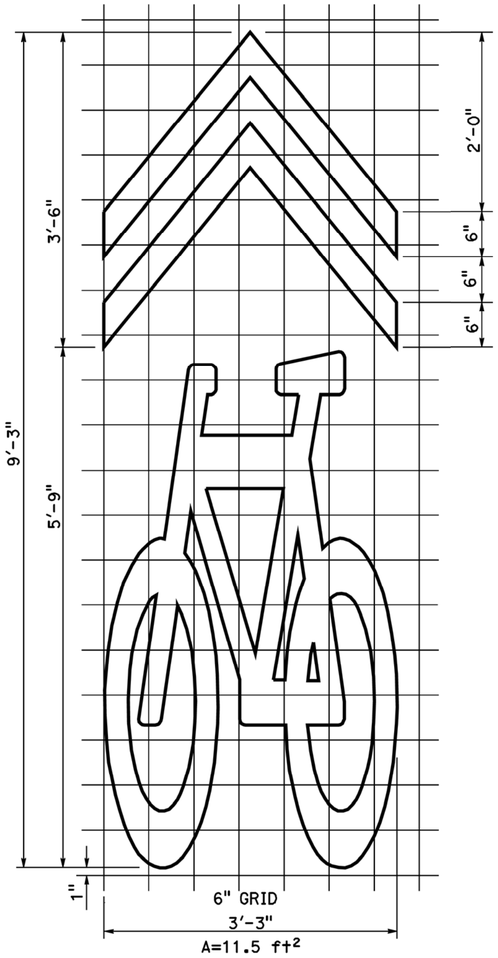

SHARED ROADWAY BICYCLE MARKING

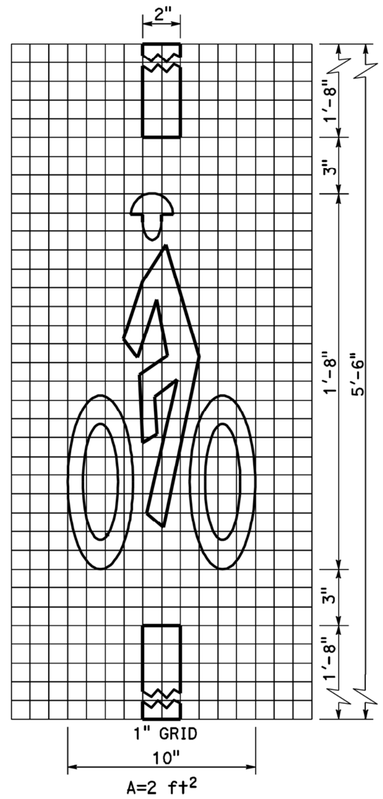

BICYCLE LOOP DETECTOR SYMBOL

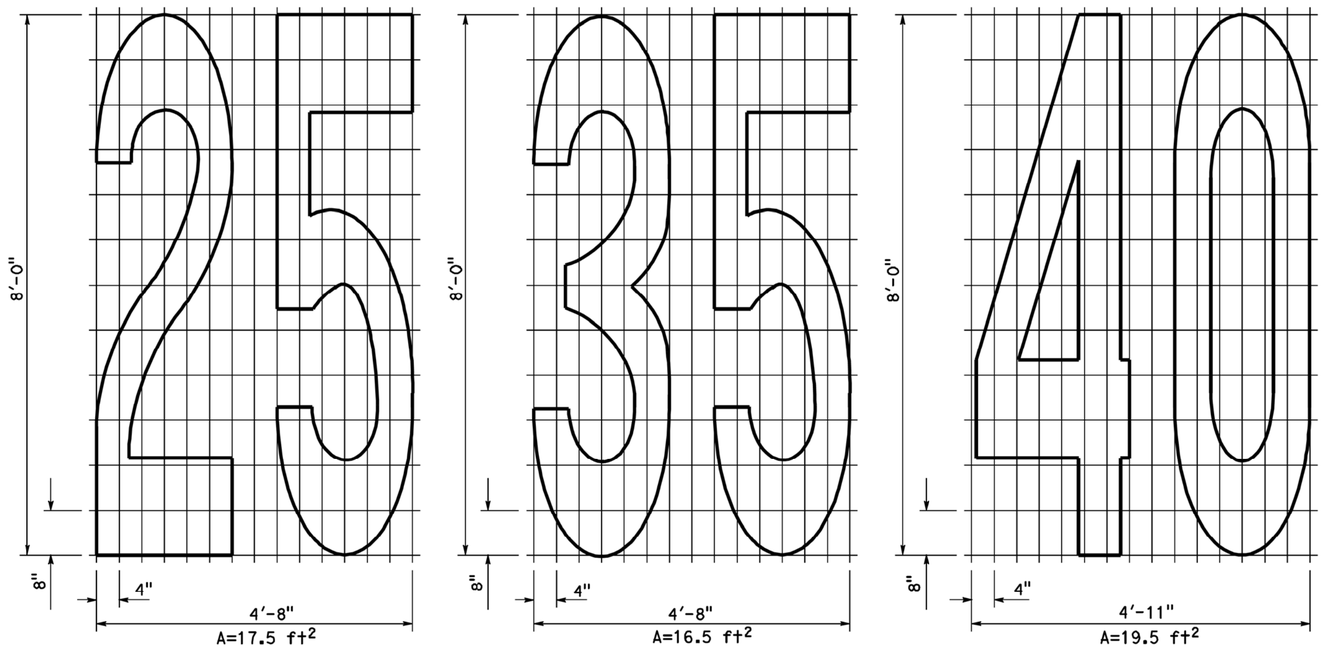

NUMERALS

STATE OF CALIFORNIA
DEPARTMENT OF TRANSPORTATION

PAVEMENT MARKINGS SYMBOLS AND NUMERALS

NO SCALE

RSP A24C DATED OCTOBER 19, 2012 SUPERSEDES STANDARD PLAN A24C DATED MAY 20, 2011 - PAGE 15 OF THE STANDARD PLANS BOOK DATED 2010.

REVISED STANDARD PLAN RSP A24C

2010 REVISED STANDARD PLAN RSP A24C

6-28-12

Dist	COUNTY	ROUTE	POST MILES TOTAL PROJECT	SHEET No.	TOTAL SHEETS
04	CC/Mrn	580	5.0/7.8, 0.0/3.3	393	579

REGISTERED CIVIL ENGINEER

July 20, 2012
PLANS APPROVAL DATE

REGISTERED PROFESSIONAL ENGINEER
Roberta L. McLaughlin
No. C40375
Exp. 3-31-13
CIVIL
STATE OF CALIFORNIA

THE STATE OF CALIFORNIA OR ITS OFFICERS OR AGENTS SHALL NOT BE RESPONSIBLE FOR THE ACCURACY OR COMPLETENESS OF SCANNED COPIES OF THIS PLAN SHEET.

TO ACCOMPANY PLANS DATED _____

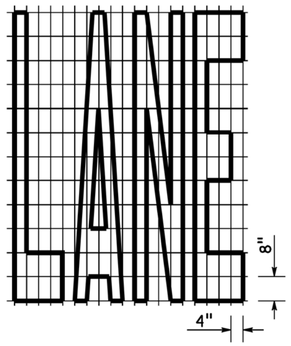

A=24 ft²

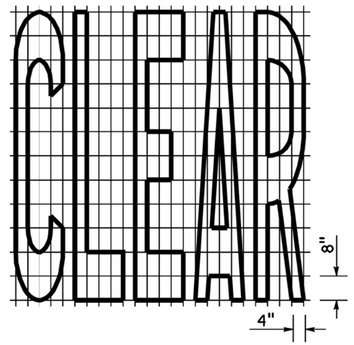

A=27 ft²

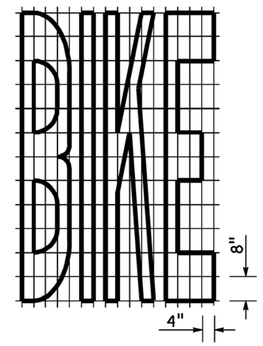

A=21 ft²

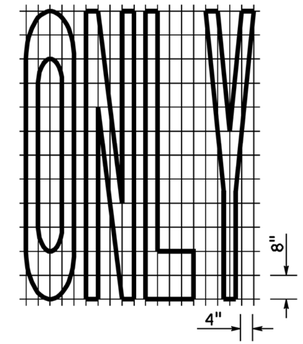

A=22 ft²

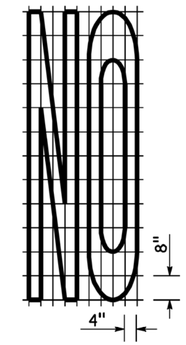

A=14 ft²

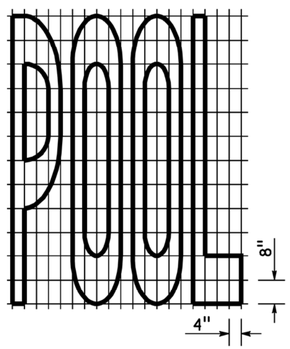

A=23 ft²

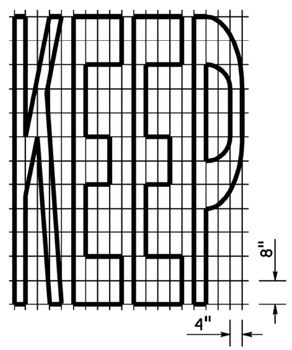

A=24 ft²

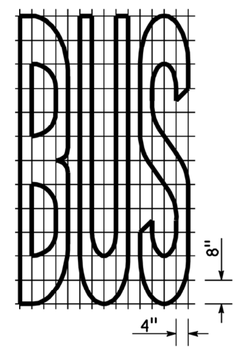

A=20 ft²

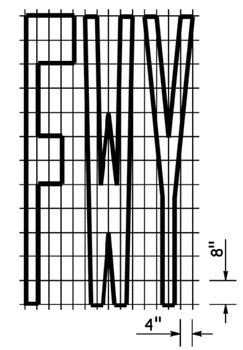

A=16 ft²

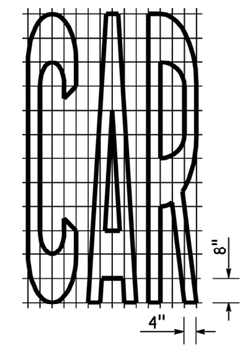

A=17 ft²

WORD MARKINGS			
ITEM	ft²	ITEM	ft²
LANE	24	NO	14
POOL	23	BIKE	21
CAR	17	BUS	20
CLEAR	27	ONLY	22
KEEP	24	FWY	16

A=2 ft²
See Notes 6 and 7

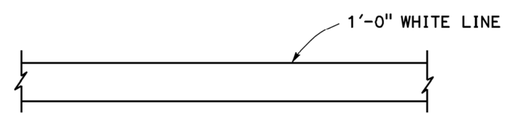

LIMIT LINE (STOP LINE)

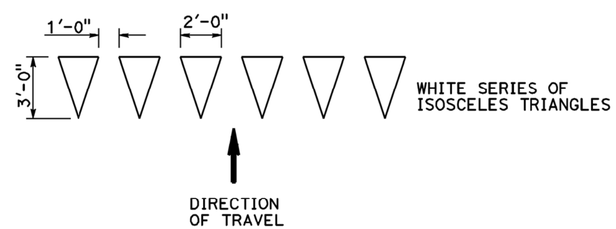

YIELD LINE

NOTES:

1. If a message consists of more than one word, it should read "UP", i.e., the first word should be nearest the driver.
2. The space between words should be at least four times the height of the characters for low speed roads, but not more than ten times the height of the characters. The space may be reduced appropriately where there is limited space because of local conditions.
3. Minor variations in dimensions may be accepted by the Engineer.
4. Portions of a letter, number or symbol may be separated by connecting segments not to exceed 2" in width.
5. The words "NO PARKING" pavement marking is to be used for parking facilities. For typical locations of markings, see Standard Plans A90A and A90B.
6. The words "NO PARKING", shall be painted in white letters no less than 1'-0" high on a contrasting background and located so that it is visible to traffic enforcement officials.

STATE OF CALIFORNIA
DEPARTMENT OF TRANSPORTATION

PAVEMENT MARKINGS
WORDS, LIMIT AND YIELD LINES

NO SCALE

RSP A24E DATED JULY 20, 2012 SUPERSEDES STANDARD PLAN A24E
DATED MAY 20, 2011 - PAGE 17 OF THE STANDARD PLANS BOOK DATED 2010.

REVISED STANDARD PLAN RSP A24E

2010 REVISED STANDARD PLAN RSP A24E

6-12-12

Dist	COUNTY	ROUTE	POST MILES TOTAL PROJECT	SHEET No.	TOTAL SHEETS
04	CC/Mrn	580	5.0/7.8, 0.0/3.3	394	579

Roberta L. McLaughlin
REGISTERED CIVIL ENGINEER

July 20, 2012
PLANS APPROVAL DATE

REGISTERED PROFESSIONAL ENGINEER
Roberta L. McLaughlin
No. C40375
Exp. 3-31-13
CIVIL
STATE OF CALIFORNIA

THE STATE OF CALIFORNIA OR ITS OFFICERS OR AGENTS SHALL NOT BE RESPONSIBLE FOR THE ACCURACY OR COMPLETENESS OF SCANNED COPIES OF THIS PLAN SHEET.

TO ACCOMPANY PLANS DATED _____

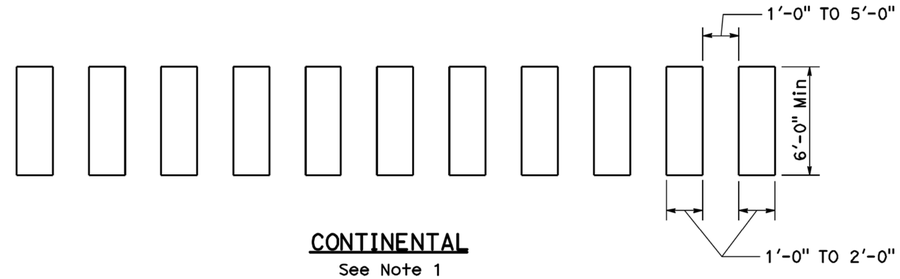

CONTINENTAL
See Note 1

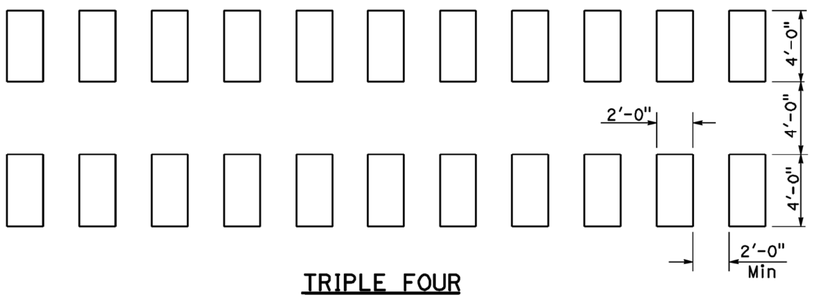

TRIPLE FOUR
See Note 1

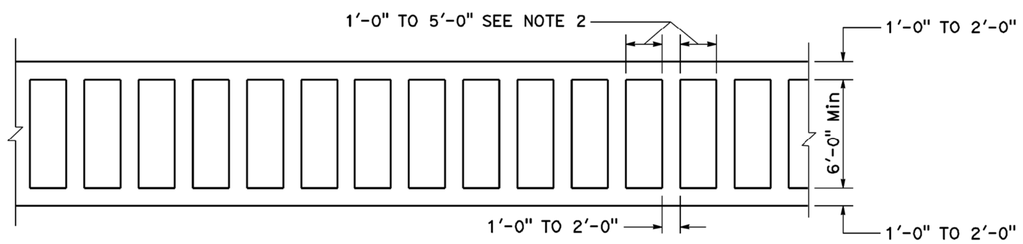

LADDER

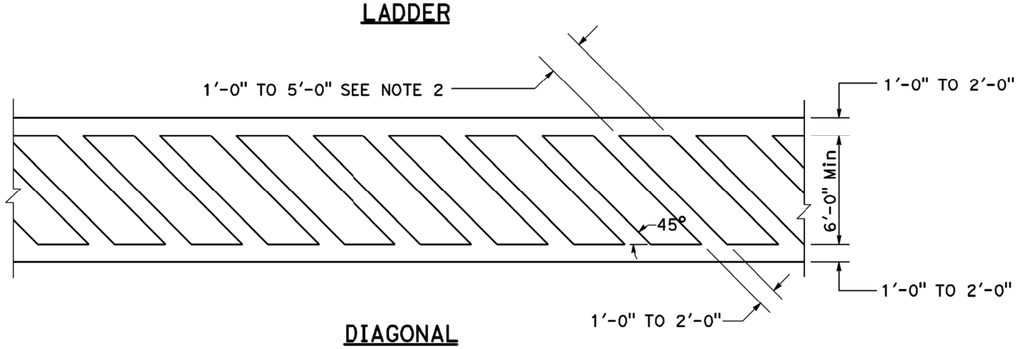

DIAGONAL

HIGHER VISIBILITY CROSSWALKS

NOTES:

1. Spaces between markings should be placed in wheel tracks of each lane.
2. Spacings not to exceed 2.5 times width of longitudinal line.
3. All crosswalk markings must be white except for those near schools must be yellow.

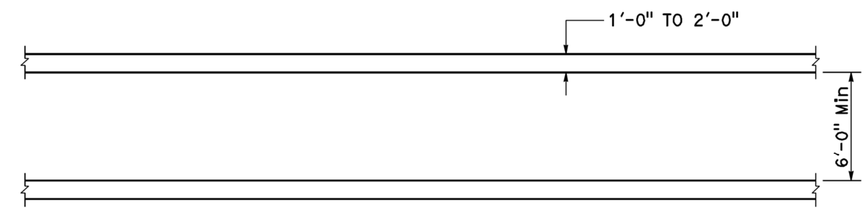

BASIC

STATE OF CALIFORNIA
DEPARTMENT OF TRANSPORTATION

PAVEMENT MARKINGS
CROSSWALKS

NO SCALE

RSP A24F DATED JULY 20, 2012 SUPPLEMENTS THE STANDARD PLANS BOOK DATED 2010.

REVISED STANDARD PLAN RSP A24F

2010 REVISED STANDARD PLAN RSP A24F

6-28-12

Dist	COUNTY	ROUTE	POST MILES TOTAL PROJECT	SHEET No.	TOTAL SHEETS
04	CC/Mrn	580	5.0/7.8, 0.0/3.3	395	579

REGISTERED CIVIL ENGINEER

July 15, 2016
PLANS APPROVAL DATE

REGISTERED PROFESSIONAL ENGINEER
Atifa Ferouz
No. C80402
Exp. 3-31-17
CIVIL
STATE OF CALIFORNIA

THE STATE OF CALIFORNIA OR ITS OFFICERS OR AGENTS SHALL NOT BE RESPONSIBLE FOR THE ACCURACY OR COMPLETENESS OF SCANNED COPIES OF THIS PLAN SHEET.

TO ACCOMPANY PLANS DATED _____

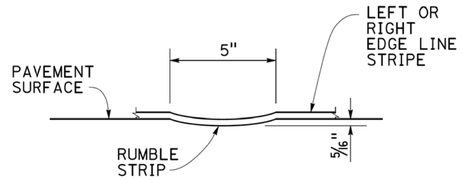

SECTION C-C

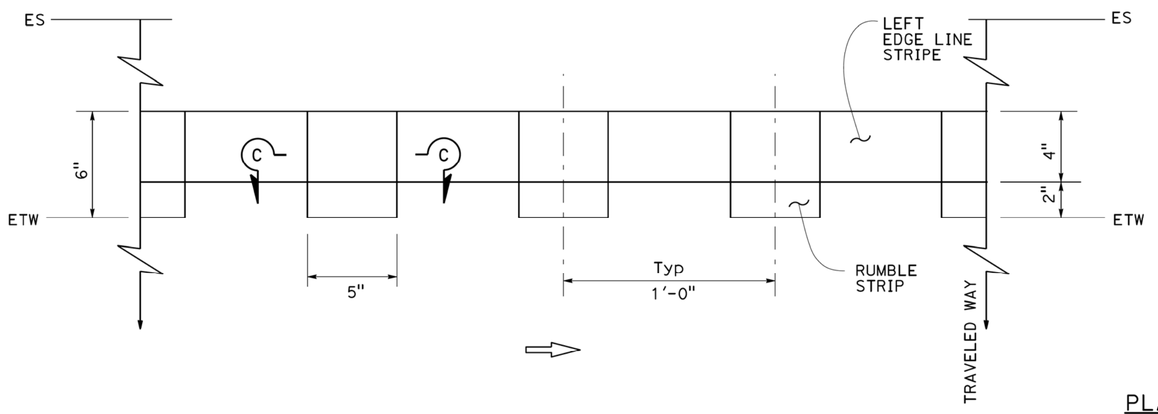

PLAN

EDGE LINE RUMBLE STRIP PLACEMENT
LEFT OF DIRECTION OF TRAVEL

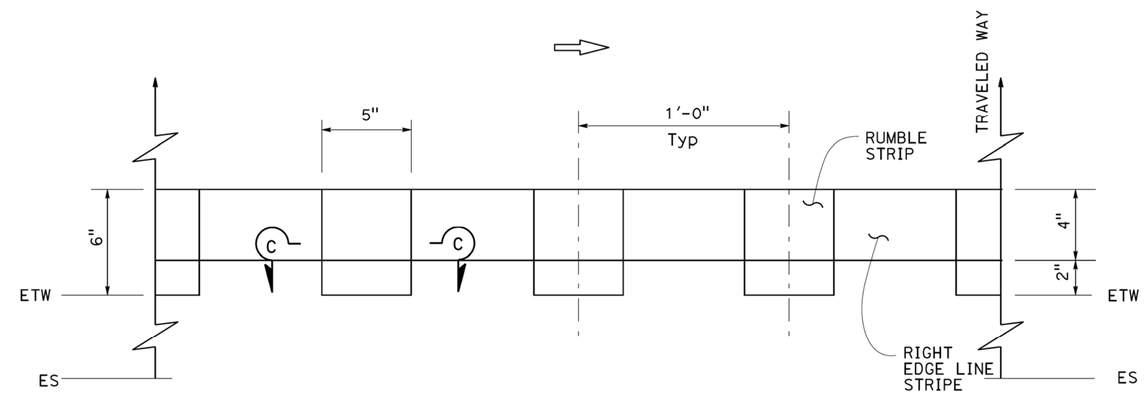

EDGE LINE RUMBLE STRIP PLACEMENT
RIGHT OF DIRECTION OF TRAVEL

TYPICAL EDGE LINE RUMBLE STRIP PLACEMENT

STATE OF CALIFORNIA
DEPARTMENT OF TRANSPORTATION

EDGE LINE RUMBLE STRIP DETAILS GROUND-IN INDENTATIONS

NO SCALE

RSP A40C DATED JULY 15, 2016 SUPPLEMENTS THE STANDARD PLANS BOOK DATED 2010.

REVISED STANDARD PLAN RSP A40C

2010 REVISED STANDARD PLAN RSP A40C

5-23-16

Dist	COUNTY	ROUTE	POST MILES TOTAL PROJECT	SHEET No.	TOTAL SHEETS
04	CC/Mrn	580	5.0/7.8, 0.0/3.3	396	579

REGISTERED CIVIL ENGINEER

July 18, 2014
PLANS APPROVAL DATE

REGISTERED PROFESSIONAL ENGINEER
Carl M. Duan
No. C59976
Exp. 6-30-16
CIVIL
STATE OF CALIFORNIA

THE STATE OF CALIFORNIA OR ITS OFFICERS OR AGENTS SHALL NOT BE RESPONSIBLE FOR THE ACCURACY OR COMPLETENESS OF SCANNED COPIES OF THIS PLAN SHEET.

TO ACCOMPANY PLANS DATED _____

DESIGN NOTES:

Design: AASHTO LRFD Bridge Design Specifications, 4th edition with California Amendments. ACPA DESIGN DATA 1, October 2007. INDIRECT DESIGN METHOD

Soil: w Fe = 162 pcf Installation Type 1
w Fe = 168 pcf Installation Types 2 & 3
w = Unit weight of soil (pcf)
Fe = Soil-structure interaction factor

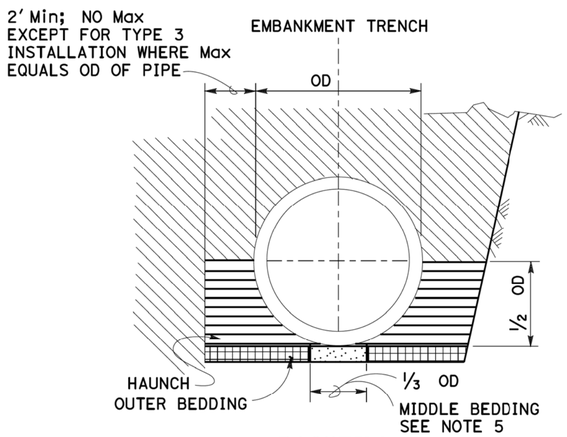

BACKFILL

LEGEND:

- ROADWAY EMBANKMENT
- STRUCTURE BACKFILL (CULVERT) FOR HAUNCH SEE NOTE 6
- STRUCTURE BACKFILL (CULVERT) FOR OUTER BEDDING SEE NOTE 6
- LOOSE BACKFILL
- STRUCTURE EXCAVATION (CULVERT)

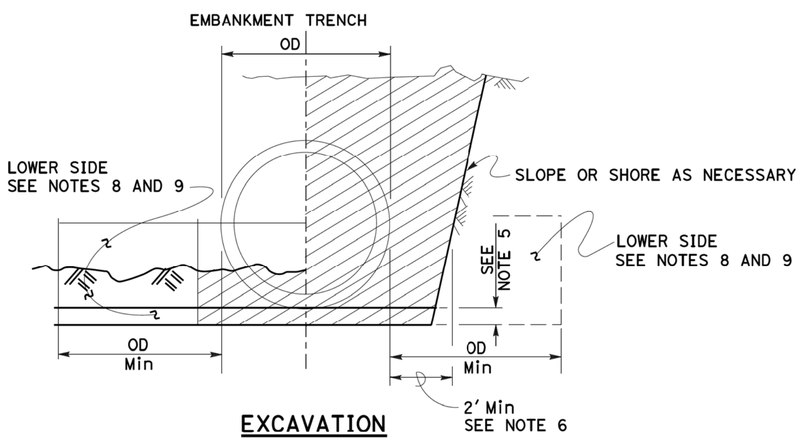

EXCAVATION

INSTALLATION TYPE 1:

The haunch and outer bedding shall be compacted to a minimum 90 percent relative compaction. In addition, the minimum sand equivalent in these areas shall be 30 and the maximum percentage passing the No. 200 sieve size shall be 12.

INSTALLATION TYPE 2:

The haunch and outer bedding shall be compacted to a minimum 90 percent relative compaction. In addition, the minimum sand equivalent in these areas shall be 25.

INSTALLATION TYPE 3:

The haunch and outer bedding shall be compacted to a minimum 85 percent relative compaction. 90 percent relative compaction will be required where the fill over the pipe is less than 4′-0" or ½ OD. In addition, the minimum sand equivalent in these areas shall be 25 and the material shall not contain rocks, broken concrete, or other solid material exceeding 3" in greatest dimension.

INSTALLATION TYPE 1

MINIMUM CLASS AND D-LOAD	COVER	
	60" Dia AND SMALLER	OVER 60" Dia TO 120" Dia Max
CLASS II 1000D	14.9′	12.9′
CLASS III 1350D	15.0′ - 21.9′	13.0′ - 18.9′
CLASS III SPECIAL 1700D	22.0′ - 27.9′	19.0′ - 24.9′
CLASS IV 2000D	28.0′ - 32.9′	25.0′ - 29.9′
CLASS IV SPECIAL 2500D	33.0′ - 41.9′	30.0′ - 38.9′
CLASS V 3000D	42.0′ - 49.9′	39.0′ - 46.9′
CLASS V SPECIAL 3600D	50.0′ - 60.0′	47.0′ - 58.0′

INSTALLATION TYPE 2

MINIMUM CLASS AND D-LOAD	COVER	
	60" Dia AND SMALLER	OVER 60" Dia TO 120" Dia Max
CLASS II 1000D	11.9′	9.9′
CLASS III 1350D	12.0′ - 15.9′	10.0′ - 14.9′
CLASS III SPECIAL 1700D	16.0′ - 20.9′	15.0′ - 19.9′
CLASS IV 2000D	21.0′ - 24.9′	20.0′ - 23.9′
CLASS IV SPECIAL 2500D	25.0′ - 31.9′	24.0′ - 30.9′
CLASS V 3000D	32.0′ - 37.9′	31.0′ - 37.9′
CLASS V SPECIAL 3600D	38.0′ - 46.0′	38.0′ - 46.0′

INSTALLATION TYPE 3

MINIMUM CLASS AND D-LOAD	COVER	
	60" Dia AND SMALLER	OVER 60" Dia TO 120" Dia Max
CLASS II 1000D	8.9′	5.9′
CLASS III 1350D	9.0′ - 11.9′	6.0′ - 10.9′
CLASS III SPECIAL 1700D	12.0′ - 15.9′	11.0′ - 13.9′
CLASS IV 2000D	16.0′ - 18.9′	14.0′ - 17.9′
CLASS IV SPECIAL 2500D	19.0′ - 24.9′	18.0′ - 22.9′
CLASS V 3000D	25.0′ - 29.9′	23.0′ - 28.9′
CLASS V SPECIAL 3600D	30.0′ - 36.0′	29.0′ - 35.0′

NOTES:

1. Unless otherwise shown on the plans or specified in the special provision, the Contractor shall have the option of selecting the class of RCP and the type of installation to be used, provided the height of cover does not exceed the value shown for the RCP selected.
   Example: 24" RCP culvert with maximum cover of 24′-0" the options are:
   a) Class III Special or stronger with Installation Type 1.
   b) Class IV or stronger with Installation Type 2.
   c) Class IV Special or stronger with Installation Type 3.
   Cover is defined as the maximum vertical distance from top of the pipe to finished grade within the length of any given culvert.
2. The class of RCP and Installation Type selected shall be the same throughout the length of any given culvert.
3. The "length of any culvert" is defined as the culvert between:
   a) Successive drainage structure (inlets, junction boxes, headwalls, etc.).
   b) A drainage structure and the inlet or outlet end of the culvert.
   c) The inlet and outlet end of the culvert when there are no intervening drainage structures.
4. Oval and arch shaped RCP shall not be used.
5. Bedding depth: 1/25 OD Min, not less than 3".
6. Slurry cement backfill may be substituted for backfill in the outer bedding and haunch areas. If slurry is used, the outer and middle beddings shall be omitted. Prior to installation, the soil under the middle ⅓ of the outside diameter of the pipe shall be softened by scarifying or other means to a minimum depth of 1/25 OD, but not less than 3". Where slurry cement backfill is used, clear distance to trench wall may be reduced as set forth in the Standard Specifications.
7. Backfill shall be placed full width of excavation except where dimensions are shown for backfill width or thickness. Dimensions shown are minimum.
8. Lower side shall be suitable material as determined by the Engineer. Otherwise it shall be considered unsuitable as set forth in of the Standard Specifications. See Note 9.
9. Where the pipe is placed in a trench, if the trench walls are sloped at 5 vertical to 1 horizontal or steeper for at least 90 percent of the trench height or up to not less than 12" from the grading plane, the firmness of the soil in the lower side need not be considered.
10. Non-reinforced precast concrete pipe sizes 3′-0" or smaller may be placed under installation Types 1, 2 or 3.

STATE OF CALIFORNIA
DEPARTMENT OF TRANSPORTATION

EXCAVATION AND BACKFILL CONCRETE PIPE CULVERTS INDIRECT DESIGN METHOD

NO SCALE

RSP A62DA DATED JULY 18, 2014 SUPERSEDES STANDARD PLAN A62DA DATED MAY 20, 2011 - PAGE 24 OF THE STANDARD PLANS BOOK DATED 2010.

REVISED STANDARD PLAN RSP A62DA

2010 REVISED STANDARD PLAN RSP A62DA

5-13-14

Dist	COUNTY	ROUTE	POST MILES TOTAL PROJECT	SHEET No.	TOTAL SHEETS
04	CC/Mrn	580	5.0/7.8, 0.0/3.3	397	579

REGISTERED CIVIL ENGINEER

October 30, 2015
PLANS APPROVAL DATE

REGISTERED PROFESSIONAL ENGINEER
Carl M. Duan
No. C59976
Exp. 6-30-16
CIVIL
STATE OF CALIFORNIA

THE STATE OF CALIFORNIA OR ITS OFFICERS OR AGENTS SHALL NOT BE RESPONSIBLE FOR THE ACCURACY OR COMPLETENESS OF SCANNED COPIES OF THIS PLAN SHEET.

TO ACCOMPANY PLANS DATED _____

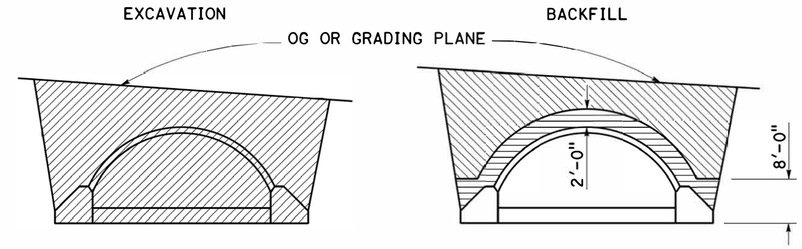

IN TRENCH

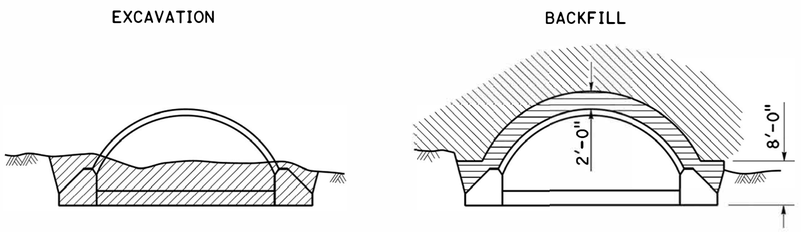

IN EMBANKMENT

STRUCTURAL STEEL PLATE ARCHES

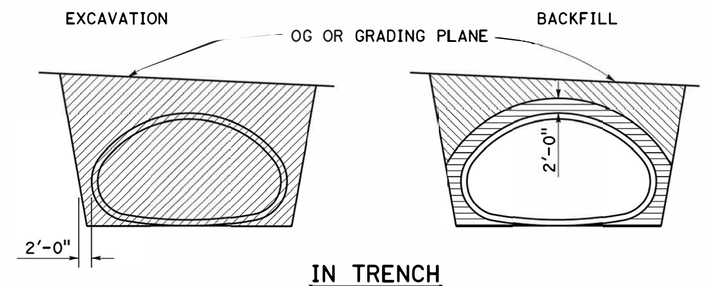

IN TRENCH

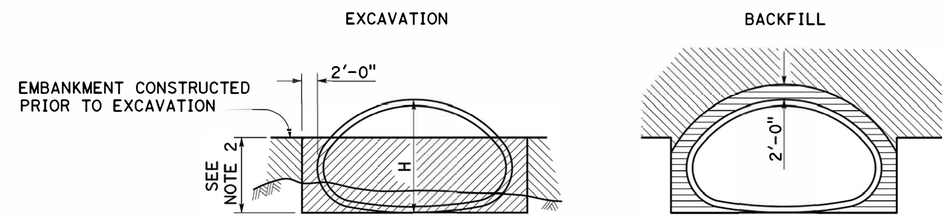

IN EMBANKMENT

STRUCTURAL STEEL PLATE PIPE ARCHES AND VEHICULAR UNDERCROSSING

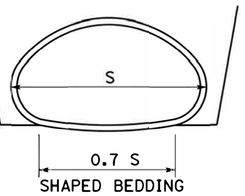

SHAPED BEDDING
S = Larger than 84"

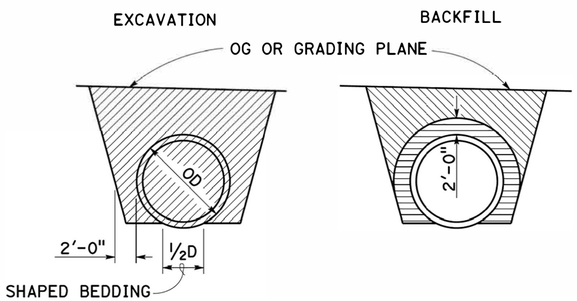

IN TRENCH

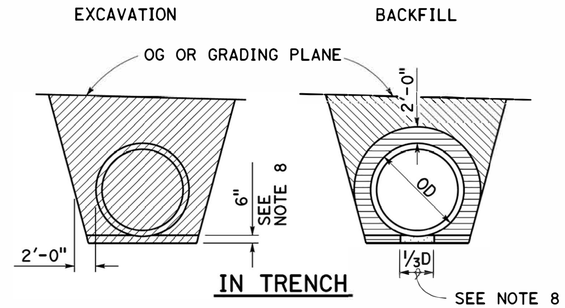

IN TRENCH

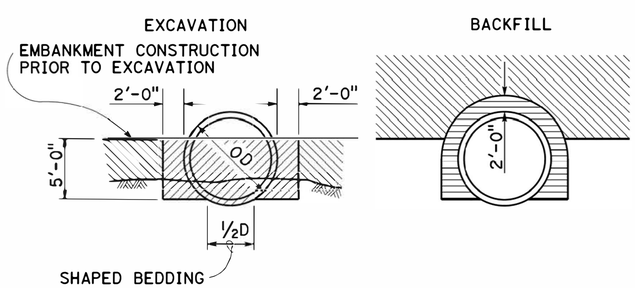

IN EMBANKMENT

PIPES

Larger than 84"

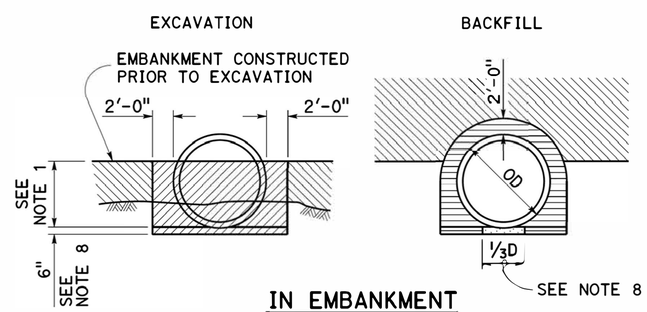

IN EMBANKMENT

METAL AND PLASTIC PIPES AND CORRUGATED METAL PIPE ARCHES

84" or Smaller

NOTES:

1. PIPES: 30" minimum for diameters up to and including 42" then ⅔ diameter but no more than 60" required. CORRUGATED METAL PIPE ARCHES: 30" maximum.
2. ⅔ H up to 60" maximum.
3. Slope or shore excavation sides as necessary.
4. Backfill shall be placed full width of excavation except as noted.
5. Diagrams do not apply to overside drains.
6. Dimensions shown are minimum.
7. Construction strutting of structural steel plate pipe, arches and vehicular undercrossing to be used when shown on the project plans. When shown, see Standard Plan D88A for strutting requirements.
8. Excavation below pipe and 80% relative compaction requirements for plastic pipes only.
9. D is the inside diameter (ID) of the pipe.

LEGEND

- STRUCTURE EXCAVATION (CULVERT)
- ROADWAY EMBANKMENT
- STRUCTURE BACKFILL (CULVERT) 95% RELATIVE COMPACTION
- STRUCTURE BACKFILL (CULVERT) 80% RELATIVE COMPACTION

STATE OF CALIFORNIA
DEPARTMENT OF TRANSPORTATION

EXCAVATION AND BACKFILL METAL AND PLASTIC CULVERTS

NO SCALE

RSP A62F DATED OCTOBER 30, 2015 SUPERSEDES STANDARD PLAN A62F DATED MAY 20, 2011 - PAGE 26 OF THE STANDARD PLANS BOOK DATED 2010.

REVISED STANDARD PLAN RSP A62F

2010 REVISED STANDARD PLAN RSP A62F

10-13-15

Dist	COUNTY	ROUTE	POST MILES TOTAL PROJECT	SHEET No.	TOTAL SHEETS
04	CC/Mrn	580	5.0/7.8, 0.0/3.3	398	579

Randell D. Hiatt
REGISTERED CIVIL ENGINEER

October 30, 2015
PLANS APPROVAL DATE

REGISTERED PROFESSIONAL ENGINEER Randell D. Hiatt No. C50200 Exp. 6-30-17 CIVIL STATE OF CALIFORNIA

THE STATE OF CALIFORNIA OR ITS OFFICERS OR AGENTS SHALL NOT BE RESPONSIBLE FOR THE ACCURACY OR COMPLETENESS OF SCANNED COPIES OF THIS PLAN SHEET.

TO ACCOMPANY PLANS DATED _____

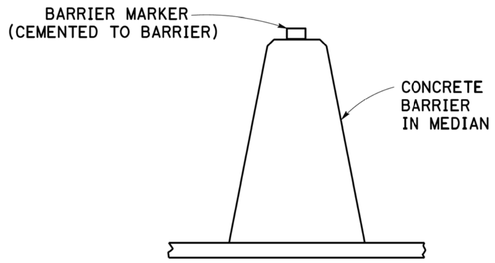

CONCRETE BARRIER TYPE 60 DELINEATION

See Note 5

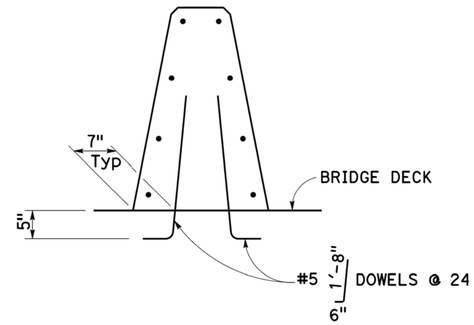

CONCRETE BARRIER TYPE 60A

Details similar to Type 60 except as noted.

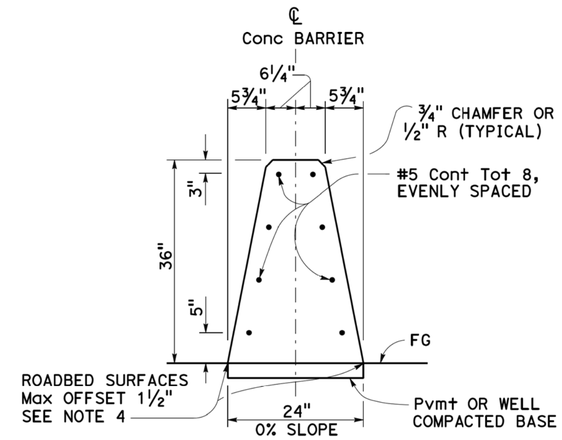

CONCRETE BARRIER TYPE 60

NOTES:

1. See Standard Plan A76B for details of Concrete Barrier Type 60 end anchors, connection to structures and transitions to Concrete Barrier Type 50 and Concrete Barrier Type 60S.
2. See Revised Standard Plan RSP A76C for Concrete Barrier Type 60 transitions at bridge column and sign pedestals.
3. Where glare screen is required on Concrete Barrier Type 60, use Concrete Barrier Type 60G.
4. Where roadbed offset is greater than 1½", see Concrete Barrier Type 60C.
5. See Project Plans for barrier delineation locations.
6. Reinforcing stirrup not required for roadbed offsets less than 1'-0".
7. For roadbed surfaces offset greater than 1½" and less than or equal to 3", no reinforcement required. For roadbed surfaces offset greater than 3" and less than or equal to 8", use two #4 Reinf at 3" above the lower roadbed surface. For roadbed surfaces offset greater than 8" and less than or equal to 12", use two #4 Reinf at 3" above the lower roadbed surface and two #4 Reinf at 8" above the lower roadbed surface. For roadbed surfaces offset greater than 12" and less than or equal to 36", use two #4 Reinf at 3" above the lower roadbed surface and two #4 Reinf at every 8" increment vertical spacing above the first two #4 Reinf.

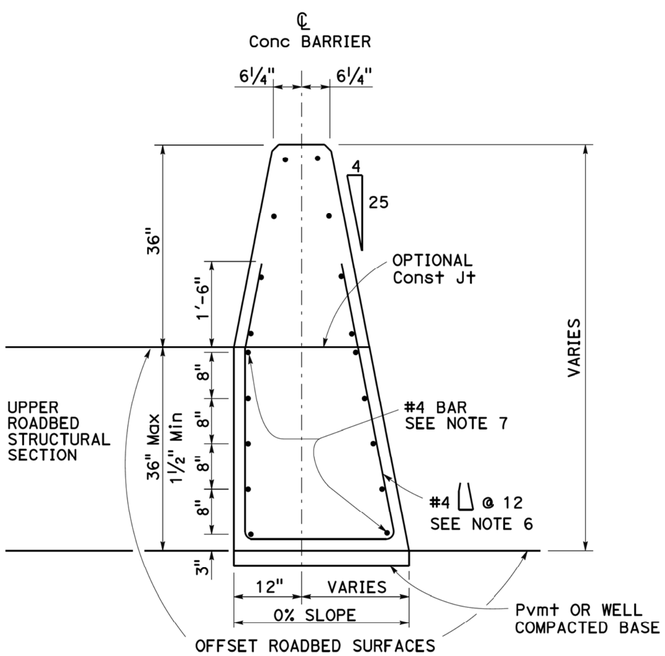

CONCRETE BARRIER TYPE 60C

Details similar to Type 60 except as noted.
Use concrete barrier end anchor when necessary.
36" roadbed surfaces offset shown.

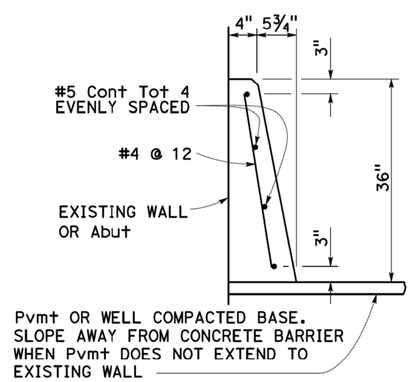

CONCRETE BARRIER TYPE 60D

STATE OF CALIFORNIA
DEPARTMENT OF TRANSPORTATION

CONCRETE BARRIER TYPE 60

NO SCALE

RSP A76A DATED OCTOBER 30, 2015 SUPERSEDES STANDARD PLAN A76A DATED MAY 20, 2011 - PAGE 34 OF THE STANDARD PLANS BOOK DATED 2010.

REVISED STANDARD PLAN RSP A76A

2010 REVISED STANDARD PLAN RSP A76A

10-7-15

Dist	COUNTY	ROUTE	POST MILES TOTAL PROJECT	SHEET No.	TOTAL SHEETS
04	CC/Mrn	580	5.0/7.8, 0.0/3.3	399	579

REGISTERED CIVIL ENGINEER

July 15, 2016
PLANS APPROVAL DATE

REGISTERED PROFESSIONAL ENGINEER
Stanley P. Johnson
No. C57793
Exp. 3-31-18
CIVIL
STATE OF CALIFORNIA

THE STATE OF CALIFORNIA OR ITS OFFICERS OR AGENTS SHALL NOT BE RESPONSIBLE FOR THE ACCURACY OR COMPLETENESS OF SCANNED COPIES OF THIS PLAN SHEET.

TO ACCOMPANY PLANS DATED _____

2010 REVISED STANDARD PLAN RSP A76BA

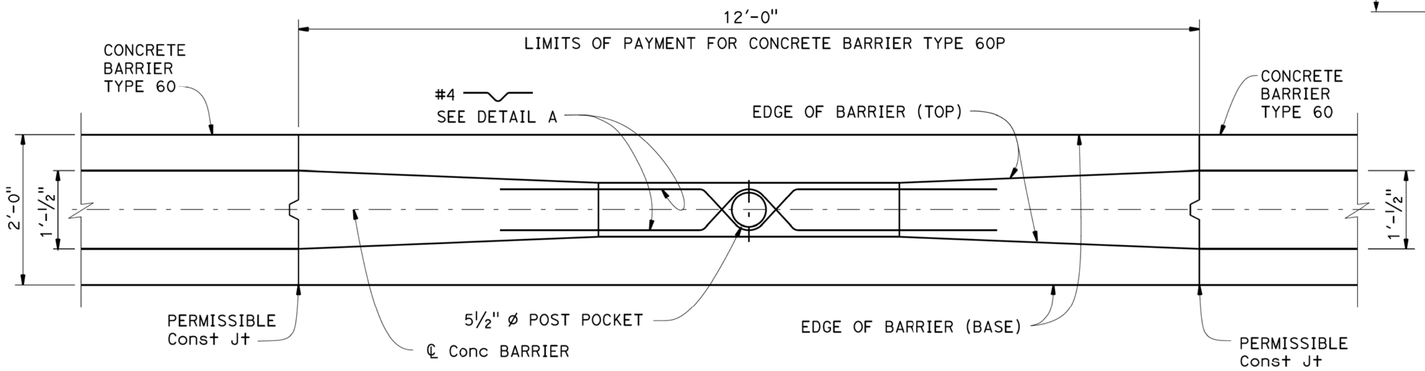

PLAN

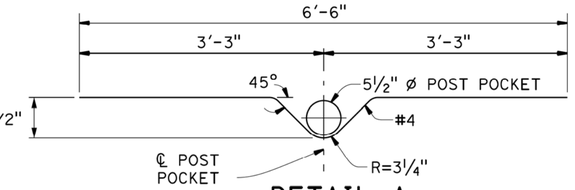

DETAIL A

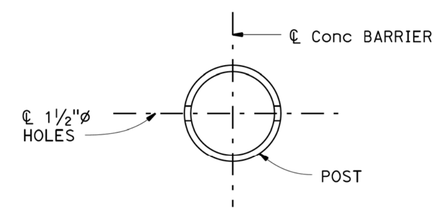

DETAIL B

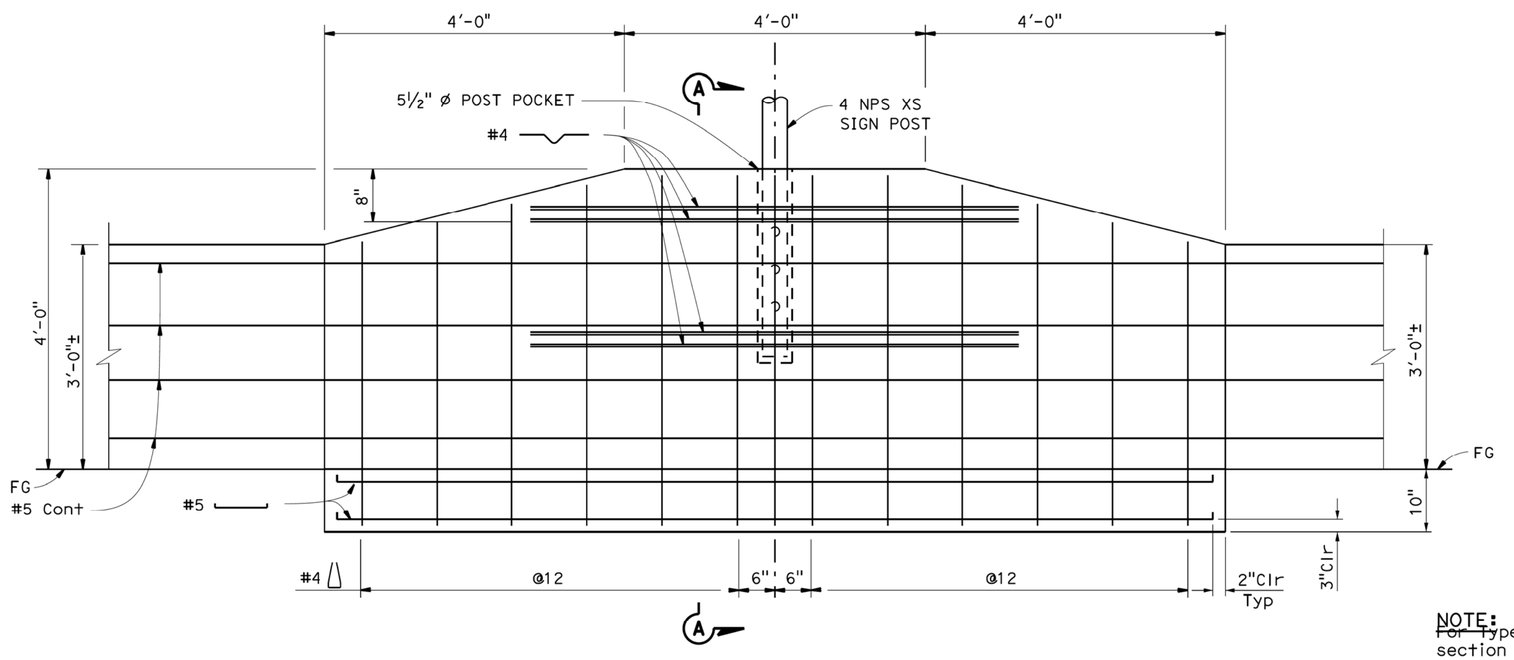

ELEVATION

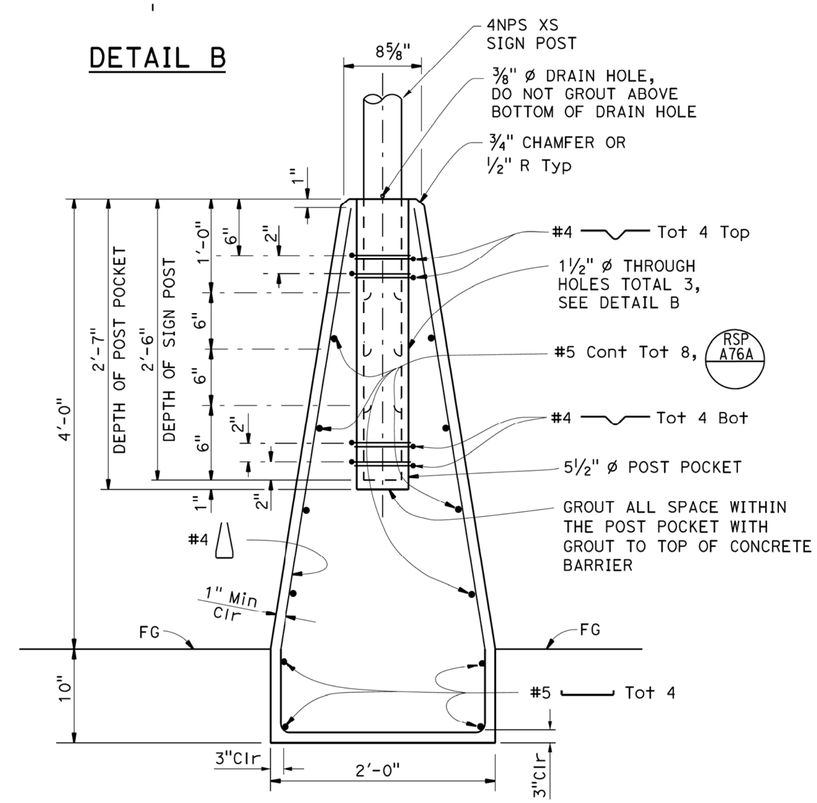

SECTION A-A

NOTE:
~~For~~ Type 60 Barrier cross section see Revised Standard Plan RSP A76A

STATE OF CALIFORNIA
DEPARTMENT OF TRANSPORTATION

CONCRETE BARRIER TYPE 60P

NO SCALE

RSP A76BA DATED JULY 15, 2016 SUPPLEMENTS THE STANDARD PLANS BOOK DATED 2010.

REVISED STANDARD PLAN RSP A76BA

6-29-16

Dist	COUNTY	ROUTE	POST MILES TOTAL PROJECT	SHEET No.	TOTAL SHEETS
04	CC/Mrn	580	5.0/7.8, 0.0/3.3	400	579

REGISTERED CIVIL ENGINEER

July 15, 2016
PLANS APPROVAL DATE

REGISTERED PROFESSIONAL ENGINEER Stanley P. Johnson No. C57793 Exp. 3-31-18 CIVIL STATE OF CALIFORNIA

THE STATE OF CALIFORNIA OR ITS OFFICERS OR AGENTS SHALL NOT BE RESPONSIBLE FOR THE ACCURACY OR COMPLETENESS OF SCANNED COPIES OF THIS PLAN SHEET.

TO ACCOMPANY PLANS DATED _____

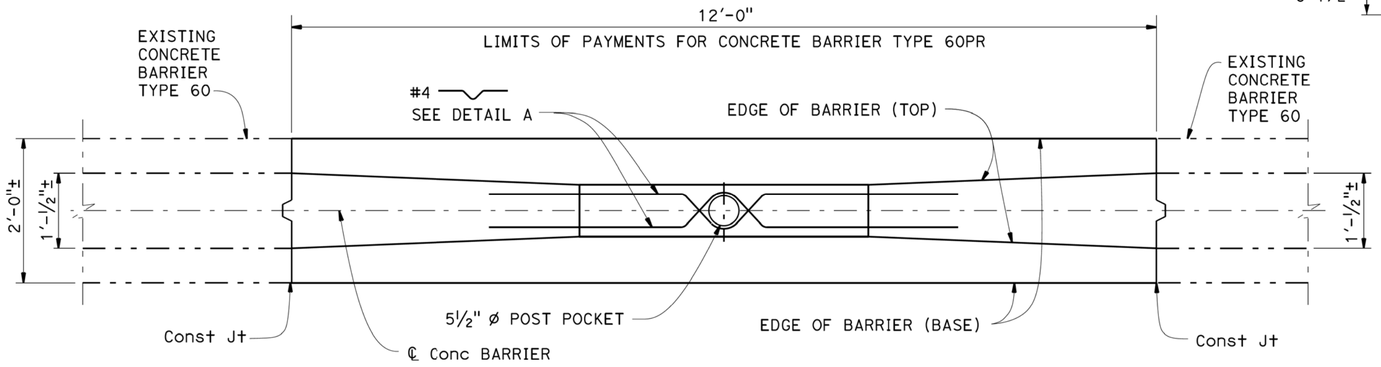

PLAN

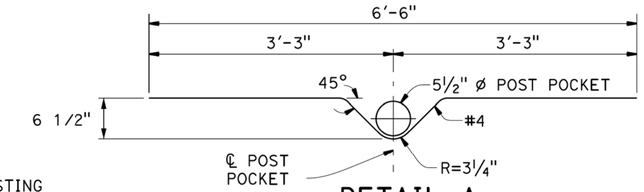

DETAIL A

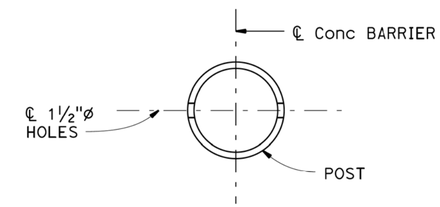

DETAIL B

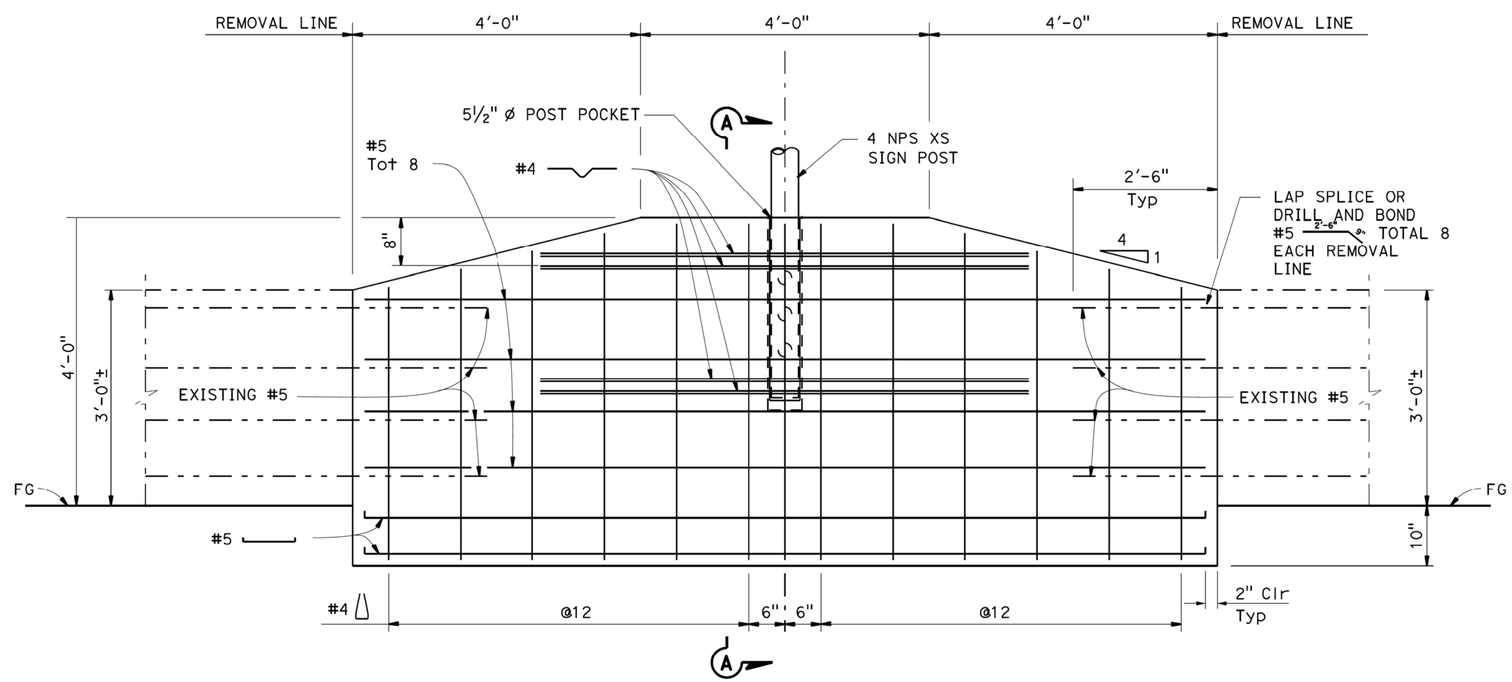

ELEVATION

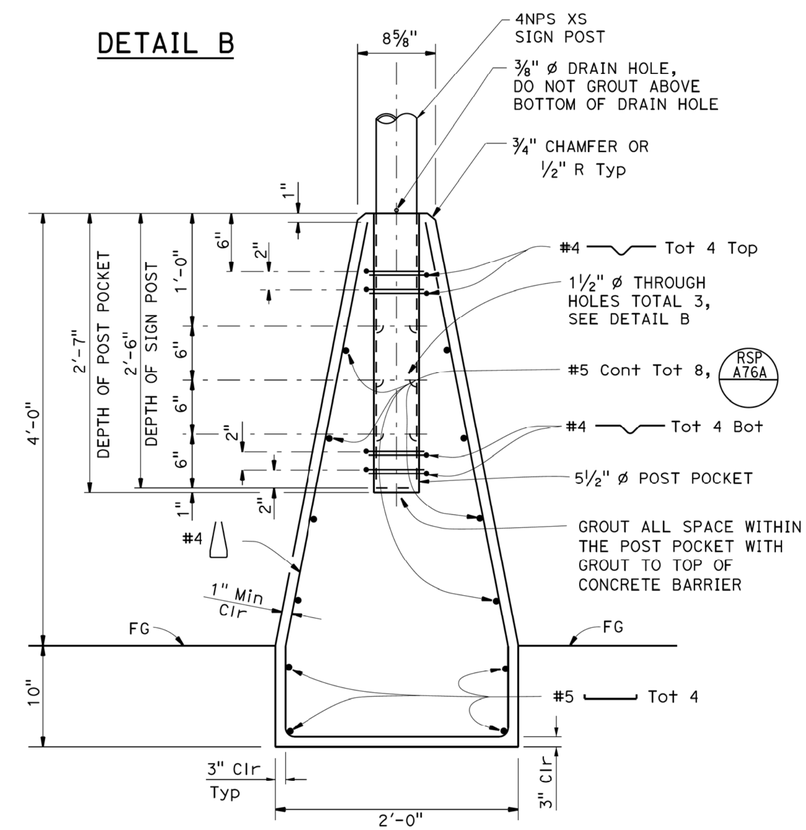

SECTION A-A

NOTE:

THE CONTRACTOR MUST VERIFY ALL CONTROLLING FIELD DIMENSIONS BEFORE ORDERING OR FABRICATING ANY MATERIAL.

STATE OF CALIFORNIA
DEPARTMENT OF TRANSPORTATION

CONCRETE BARRIER TYPE 60PR

NO SCALE

RSP A76BB DATED JULY 15, 2016 SUPPLEMENTS THE STANDARD PLANS BOOK DATED 2010.

REVISED STANDARD PLAN RSP A76BB

2010 REVISED STANDARD PLAN RSP A76BB

6-29-16

Dist	COUNTY	ROUTE	POST MILES TOTAL PROJECT	SHEET No.	TOTAL SHEETS
04	CC/Mrn	580	5.0/7.8, 0.0/3.3	401	579

Randell D. Hiatt
REGISTERED CIVIL ENGINEER

July 19, 2013
PLANS APPROVAL DATE

REGISTERED PROFESSIONAL ENGINEER Randell D. Hiatt No. C50200 Exp. 6-30-15 CIVIL STATE OF CALIFORNIA

THE STATE OF CALIFORNIA OR ITS OFFICERS OR AGENTS SHALL NOT BE RESPONSIBLE FOR THE ACCURACY OR COMPLETENESS OF SCANNED COPIES OF THIS PLAN SHEET.

TO ACCOMPANY PLANS DATED _____

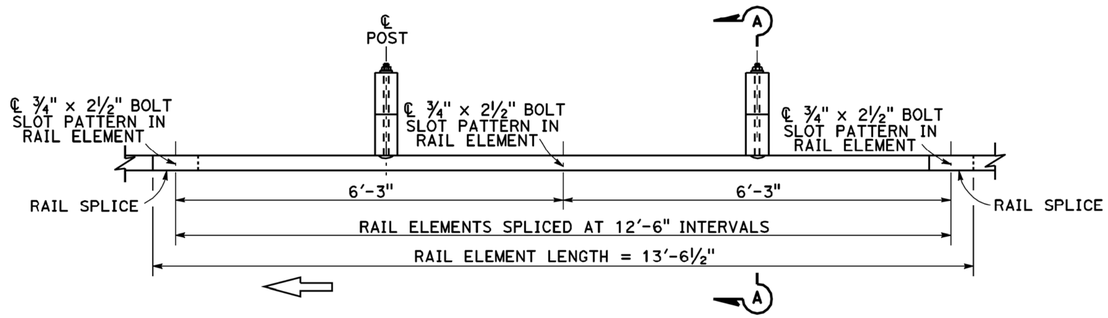

PLAN

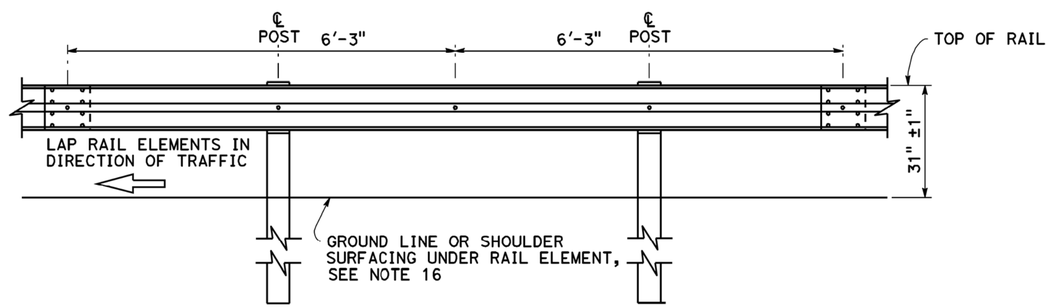

ELEVATION

MIDWEST GUARDRAIL SYSTEM WITH WOOD POST AND BLOCKS

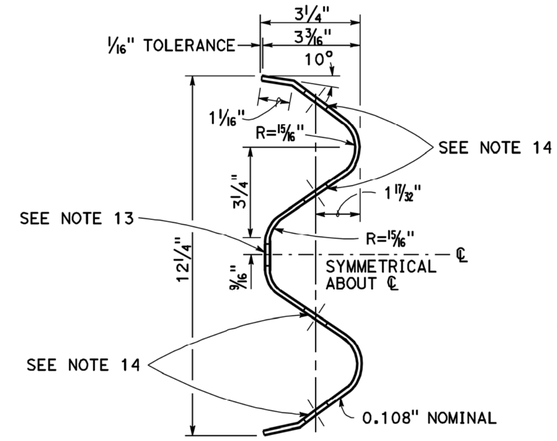

SECTION THRU RAIL ELEMENT

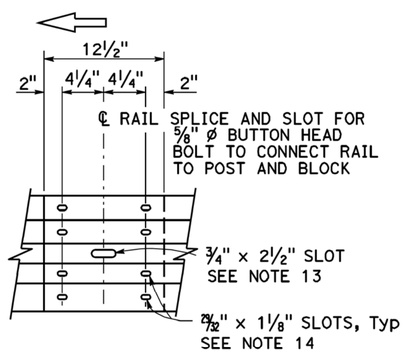

ELEVATION

RAIL ELEMENT SPLICE DETAIL

a) Connect the over lapped end of the rail elements with ⅝" ø x 1⅜" button head oval shoulder splice bolts inserted into the 29/32" x 1⅛" slots and bolted together with ⅝" ø recessed hex nuts. Recess of hex nut points toward rail element. A total of 8 bolts and nuts are to be used at each rail splice connection.

b) The ends of the rail elements are to be overlapped in the direction of traffic (see details).

c) Where end cap is to be attached to the end of a rail element, a total of 4 of the above described splice bolts and nuts are to be used.

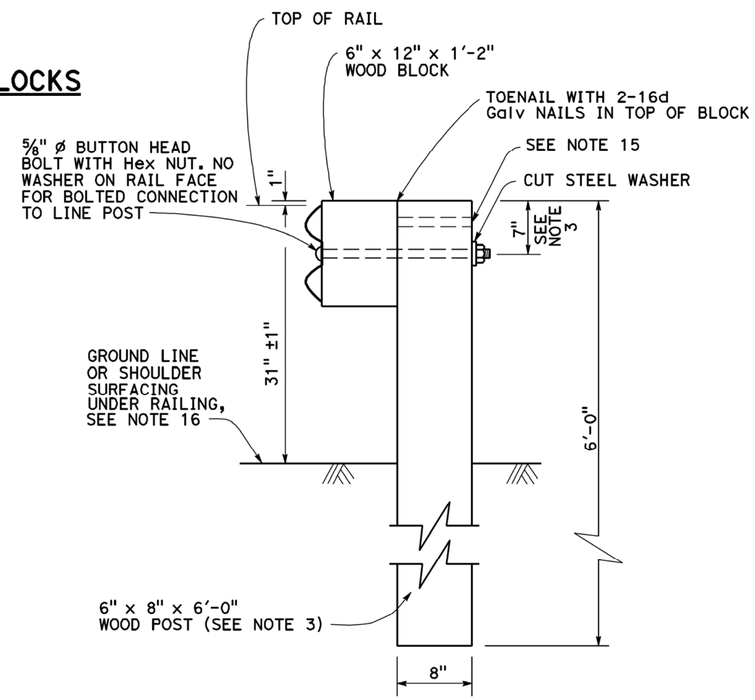

SECTION A-A

TYPICAL WOOD LINE POST INSTALLATION

See Note 4

NOTES:

1. For details of steel post installations, see Revised Standard Plan RSP A77L2.
2. For details of standard hardware used to construct MGS, see Revised Standard Plan RSP A77M1.
3. For details of wood posts and wood blocks used to construct MGS, see Revised Standard Plan RSP A77N1.
4. For additional installation details, see Revised Standard Plan RSP A77N3.
5. MGS post spacing to be 6'-3" center to center, except as otherwise noted.
6. For MGS typical layouts, see the A77P, A77Q and A77R Series of Standard Plans.
7. If railing is connected to terminal system end treatment, use 31" height terminal system end treatment.
8. For MGS end anchor details, see Revised Standard Plans RSP A77S1 and RSP A77T2.
9. For details of MGS transition to bridge railing, see Revised Standard Plan RSP A77U4.
10. For additional details of MSG connection to bridge railing, see Revised Standard Plans RSP A77U1, RSP A77U2 and RSP A77V1.
11. For MGS connection details to abutments and walls, see Revised Standard Plan RSP A77U3.
12. For typical MGS delineation and dike positioning details, see Revised Standard Plan RSP A77N4.
13. Slotted hole for bolted connection of rail element to block and post. See "Section Thru Rail Element".
14. Slotted holes for splice bolts to overlap ends of rail element. See "Section Thru Rail Element".
15. Additional hole in uppermost portion of line post is for potential future adjustments of railing height. See Revised Standard Plan RSP A77N1.
16. Install posts in soil.

STATE OF CALIFORNIA
DEPARTMENT OF TRANSPORTATION

MIDWEST GUARDRAIL SYSTEM STANDARD RAILING SECTION (WOOD POST WITH WOOD BLOCK)

NO SCALE

RSP A77L1 DATED JULY 19, 2013 SUPPLEMENTS STANDARD PLANS BOOK DATED 2010.

REVISED STANDARD PLAN RSP A77L1

2010 REVISED STANDARD PLAN RSP A77L1

7-3-13

Dist	COUNTY	ROUTE	POST MILES TOTAL PROJECT	SHEET No.	TOTAL SHEETS
04	CC/Mrn	580	5.0/7.8, 0.0/3.3	402	579

Randell D. Hiatt
REGISTERED CIVIL ENGINEER

July 19, 2013
PLANS APPROVAL DATE

REGISTERED PROFESSIONAL ENGINEER
Randell D. Hiatt
No. C50200
Exp. 6-30-15
CIVIL
STATE OF CALIFORNIA

THE STATE OF CALIFORNIA OR ITS OFFICERS OR AGENTS SHALL NOT BE RESPONSIBLE FOR THE ACCURACY OR COMPLETENESS OF SCANNED COPIES OF THIS PLAN SHEET.

TO ACCOMPANY PLANS DATED _____

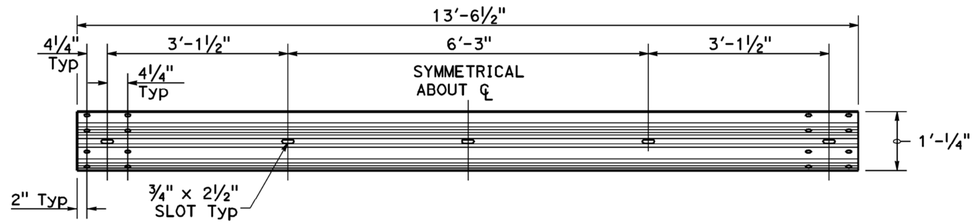

TYPICAL RAIL ELEMENT

NOTE:

1. Slotted holes for splice bolts to overlap ends of rail element.

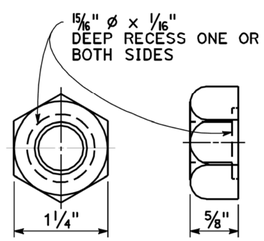

⅝" ø RECESS NUT

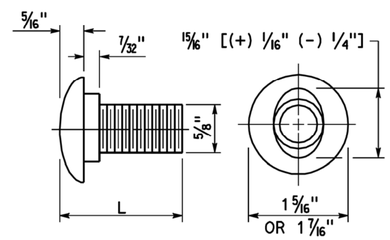

⅝" ø BUTTON HEAD BOLT

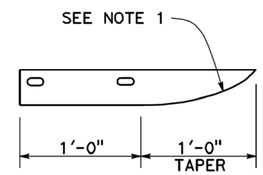

PLAN

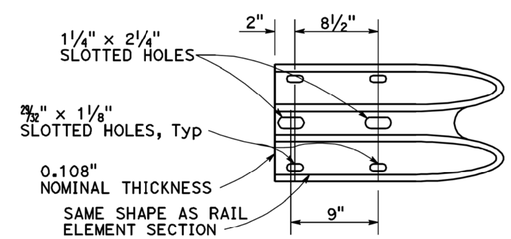

ELEVATION
END CAP
(TYPE A)

BUTTON HEAD BOLT

L	THREAD LENGTH
1⅜"	FULL THREAD LENGTH
2"	FULL THREAD LENGTH
10"	4" Min THREAD LENGTH
18"	4" Min THREAD LENGTH
20"	4" Min THREAD LENGTH
22"	4" Min THREAD LENGTH
26"	4" Min THREAD LENGTH
36"	4" Min THREAD LENGTH
** 2¾"	2" Min THREAD LENGTH
** 19"	4" Min THREAD LENGTH

** For nested rail applications.

STATE OF CALIFORNIA
DEPARTMENT OF TRANSPORTATION

MIDWEST GUARDRAIL SYSTEM STANDARD HARDWARE

NO SCALE

RSP A77M1 DATED JULY 19, 2013 SUPPLEMENTS THE STANDARD PLANS BOOK DATED 2010.

REVISED STANDARD PLAN RSP A77M1

2010 REVISED STANDARD PLAN RSP A77M1

7-3-13

Dist	COUNTY	ROUTE	POST MILES TOTAL PROJECT	SHEET No.	TOTAL SHEETS
04	CC/Mrn	580	5.0/7.8, 0.0/3.3	403	579

Randell D. Hiatt
REGISTERED CIVIL ENGINEER

July 19, 2013
PLANS APPROVAL DATE

REGISTERED PROFESSIONAL ENGINEER
Randell D. Hiatt
No. C50200
Exp. 6-30-15
CIVIL
STATE OF CALIFORNIA

THE STATE OF CALIFORNIA OR ITS OFFICERS OR AGENTS SHALL NOT BE RESPONSIBLE FOR THE ACCURACY OR COMPLETENESS OF SCANNED COPIES OF THIS PLAN SHEET.

TO ACCOMPANY PLANS DATED _____

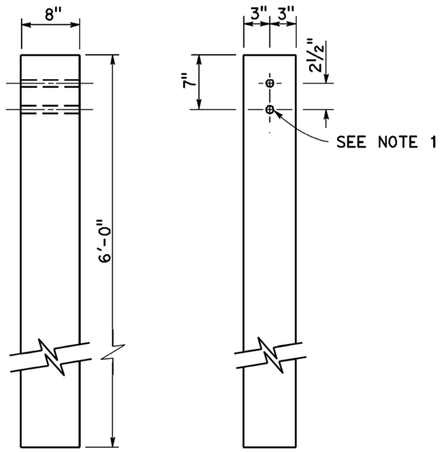

SIDE FRONT

6" x 8" WOOD POST
See Note 3

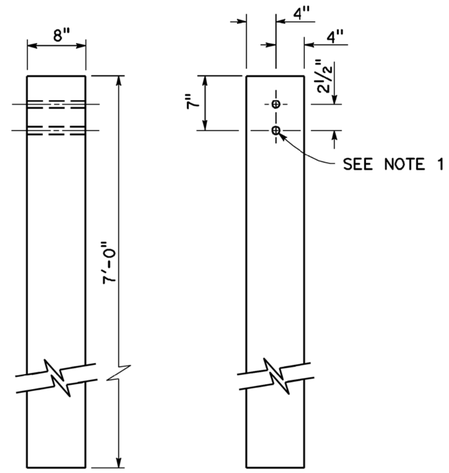

SIDE FRONT

8" x 8" WOOD POST
See Note 4

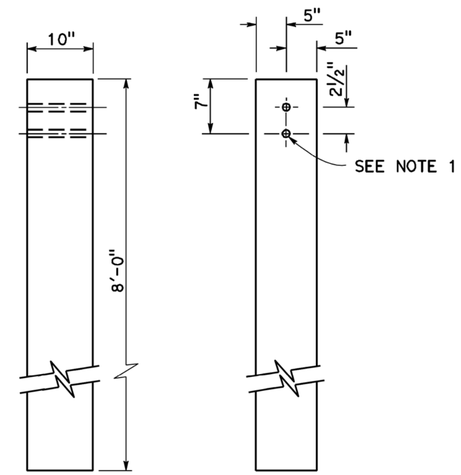

SIDE FRONT

10" x 10" WOOD POST
See Note 5

NOTES:

1. All holes in wood posts and blocks shall be ¾" Dia ± 1/16".
2. Dimensions shown for wood post are nominal.
3. This post and block combination used for standard line post sections of MGS.
4. This post and 8" x 12" block combination used for line post sections of MGS on narrow roadways.
5. This post and 8" x 12" block combination is typically used where strengthened line post sections of MGS are warranted to shield fixed objects.
6. See Revised Standard Plan RSP A77L3 for use of 6" x 8" and 8" x 8" wood blocks.

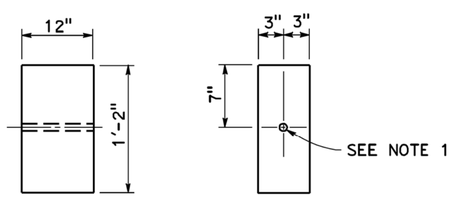

SIDE FRONT

6" x 12" WOOD BLOCK
See Note 3

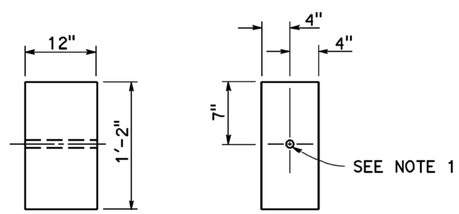

SIDE FRONT

8" x 12" WOOD BLOCK

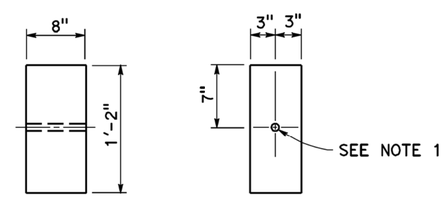

SIDE FRONT

6" x 8" WOOD BLOCK
Only for use with metal beam guard rail see Note 6

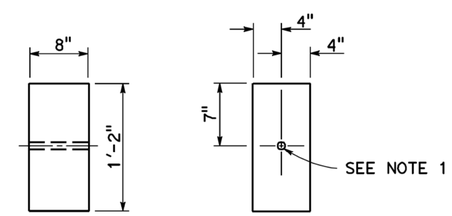

SIDE FRONT

8" x 8" WOOD BLOCK
Only for use with metal beam guard rail see Note 6

STATE OF CALIFORNIA
DEPARTMENT OF TRANSPORTATION

MIDWEST GUARDRAIL SYSTEM WOOD POST AND WOOD BLOCK DETAILS

NO SCALE

RSP A77N1 DATED JULY 19, 2013 SUPPLEMENTS THE STANDARD PLANS BOOK DATED 2010.

REVISED STANDARD PLAN RSP A77N1

2010 REVISED STANDARD RSP PLAN A77N1

7-3-13

Dist	COUNTY	ROUTE	POST MILES TOTAL PROJECT	SHEET No.	TOTAL SHEETS
04	CC/Mrn	580	5.0/7.8, 0.0/3.3	404	579

Randell D. Hiatt
REGISTERED CIVIL ENGINEER

November 15, 2013
PLANS APPROVAL DATE

REGISTERED PROFESSIONAL ENGINEER
Randell D. Hiatt
No. C50200
Exp. 6-30-15
CIVIL
STATE OF CALIFORNIA

THE STATE OF CALIFORNIA OR ITS OFFICERS OR AGENTS SHALL NOT BE RESPONSIBLE FOR THE ACCURACY OR COMPLETENESS OF SCANNED COPIES OF THIS PLAN SHEET.

TO ACCOMPANY PLANS DATED _____

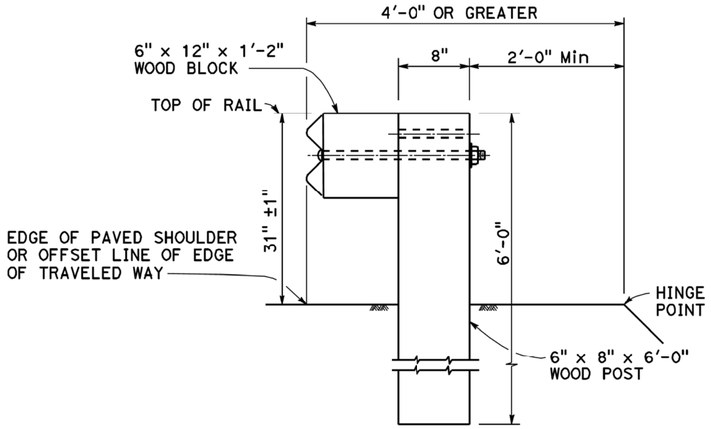

DETAIL A
TYPICAL ROADWAY INSTALLATION
See Note 1

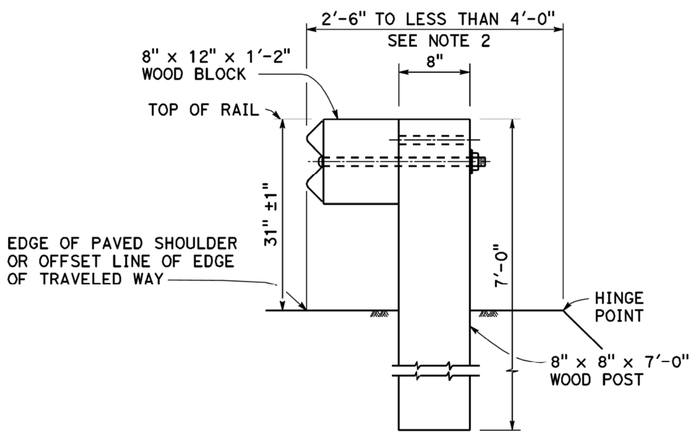

DETAIL B
NARROW ROADWAY INSTALLATION
See Note 1

POST EMBEDMENT

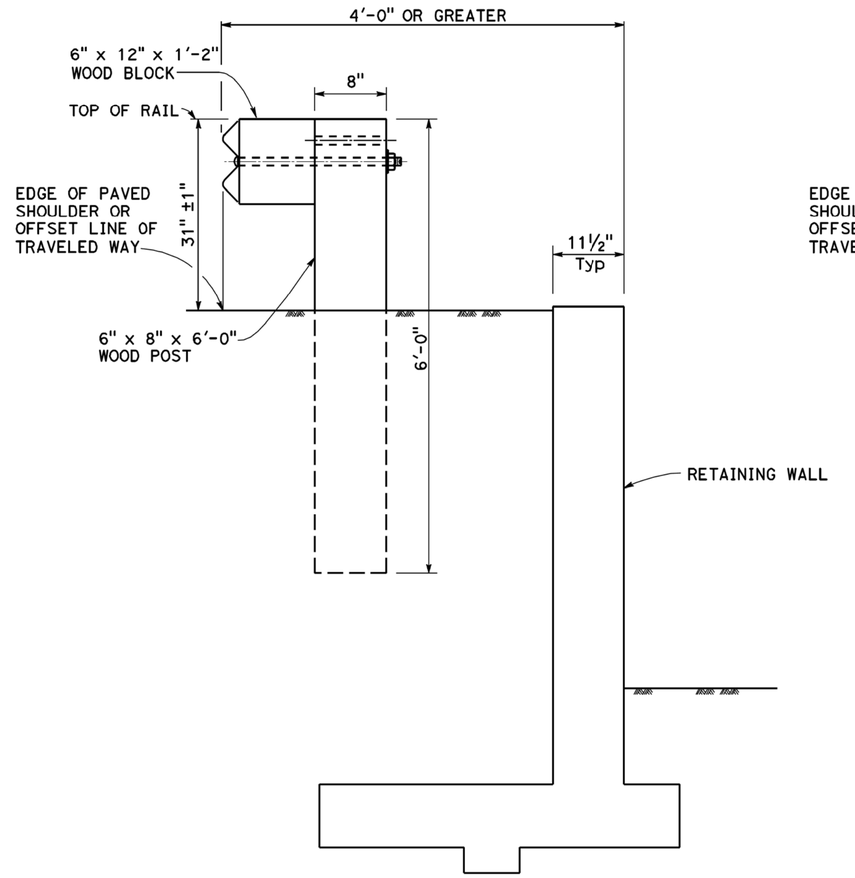

DETAIL C

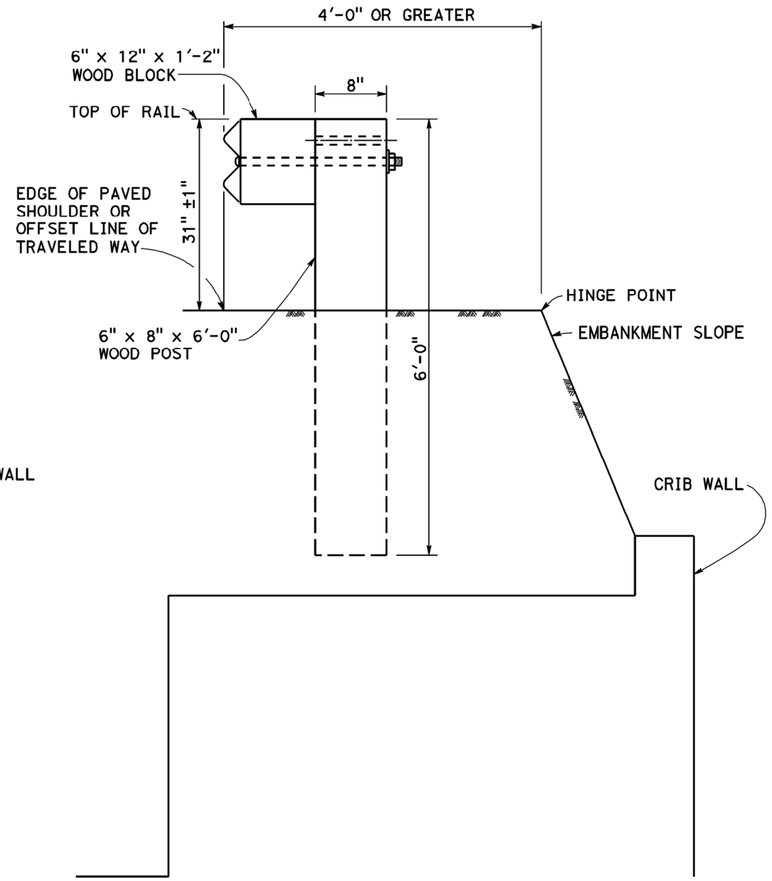

DETAIL D

INSTALLATION AT EARTH RETAINING WALLS

NOTES:

1. These installation details also applicable to steel line post installations. For Detail A, C, and D, where steel line post installations are constructed, W6 x 8.5 or W6 x 9 steel post, 6'-0" in length, with 6" x 12" x 1'-2" notched wood blocks or notched recycled plastic blocks are to be used in place of the size of wood post and wood block shown. For Detail B, where steel line post installations are constructed, W6 x 15 steel post, 8'-0" in length, with 8" x 12" x 1'-2" notched wood blocks or notched recycled plastic blocks are to be used in place of the size of wood post and wood block shown. For additional installation details, see Revised Standard Plan RSP A77L1 and RSP A77L2.
2. Where the distance between the face of the rail and the hinge point is less than 2'-6", see the Project Plans for special details.
3. For dike positioning with MGS installations, see Revised Standard Plan RSP A77N4.

STATE OF CALIFORNIA
DEPARTMENT OF TRANSPORTATION

MIDWEST GUARDRAIL SYSTEM TYPICAL LINE POST EMBEDMENT AND HINGE POINT OFFSET DETAILS

NO SCALE

RSP A77N3 DATED NOVEMBER 15, 2013 SUPERSEDES RSP A77N3
DATED JULY 19, 2013 THAT SUPPLEMENTS THE STANDARD PLANS BOOK DATED 2010.

REVISED STANDARD PLAN RSP A77N3

2010 REVISED STANDARD PLAN RSP A77N3

10-29-13

Dist	COUNTY	ROUTE	POST MILES TOTAL PROJECT	SHEET No.	TOTAL SHEETS
04	CC/Mrn	580	5.0/7.8, 0.0/3.3	405	579

Randell D. Hiatt
REGISTERED CIVIL ENGINEER

July 19, 2013
PLANS APPROVAL DATE

REGISTERED PROFESSIONAL ENGINEER
Randell D. Hiatt
No. C50200
Exp. 6-30-15
CIVIL
STATE OF CALIFORNIA

THE STATE OF CALIFORNIA OR ITS OFFICERS OR AGENTS SHALL NOT BE RESPONSIBLE FOR THE ACCURACY OR COMPLETENESS OF SCANNED COPIES OF THIS PLAN SHEET.

TO ACCOMPANY PLANS DATED _____

NOTES:

1. When necessary to place dike more than 7" in front of face of MGS, only Type C dike may be used. For dike details, see Revised Standard Plan RSP A87B.
2. For standard railing post embedment, see Revised Standard Plan RSP A77N3.
3. MGS delineation to be used where shown on the Project Plans.
4. When dike or curb is placed under MGS, the maximum height of the dike or curb shall be 6". Mountable dike should not be used. For dike and curb details, see Revised Standard Plans RSP A87A and RSP A87B.
5. For details of typical distance between the face of rail and hinge point, see Revised Standard Plan RSP A77N3.
6. For steel line posts, use 1/4 - 20 self-tapping screws in 0.22" diameter holes or 1/4" bolts in 9/32" diameter holes.

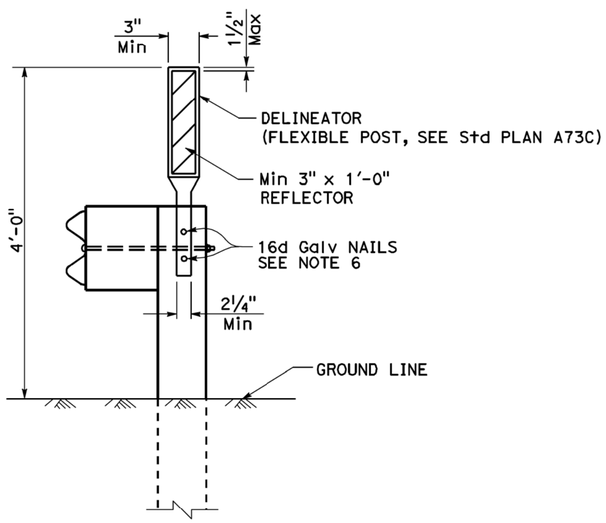

MGS DELINEATION

See Note 3

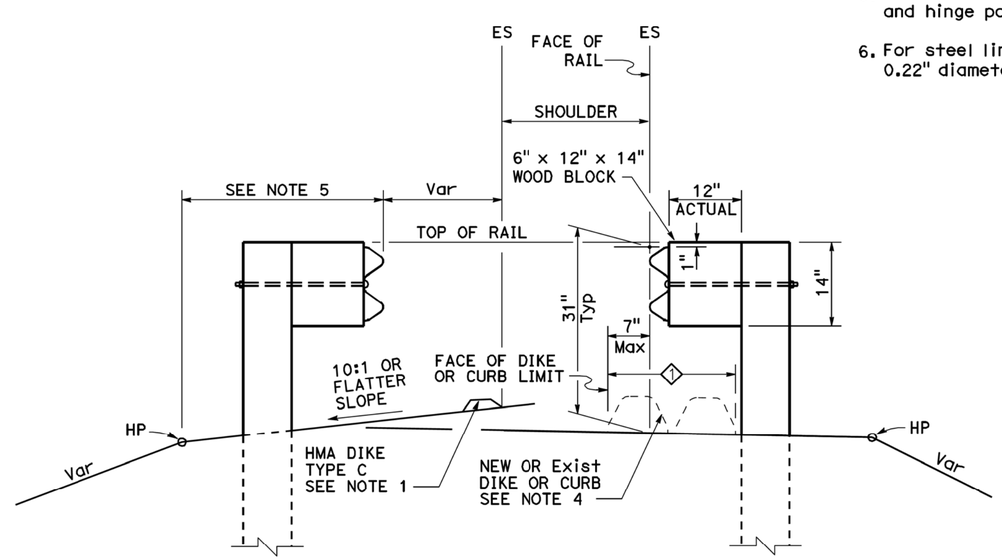

DIKE POSITIONING

See Note 1

1 PERMISSIBLE DIKE OR CURB PLACEMENT AREA

STATE OF CALIFORNIA
DEPARTMENT OF TRANSPORTATION

MIDWEST GUARDRAIL SYSTEM TYPICAL RAILING DELINEATION AND DIKE POSITIONING DETAILS

NO SCALE

RSP A77N4 DATED JULY 19, 2013 SUPPLEMENTS THE STANDARD PLANS BOOK DATED 2010.

REVISED STANDARD PLAN RSP A77N4

2010 REVISED STANDARD PLAN RSP A77N4

7-10-13

Dist	COUNTY	ROUTE	POST MILES TOTAL PROJECT	SHEET No.	TOTAL SHEETS
04	CC/Mrn	580	5.0/7.8, 0.0/3.3	406	579

Randell D. Hiatt
REGISTERED CIVIL ENGINEER

July 19, 2013
PLANS APPROVAL DATE

REGISTERED PROFESSIONAL ENGINEER
Randell D. Hiatt
No. C50200
Exp. 6-30-15
CIVIL
STATE OF CALIFORNIA

THE STATE OF CALIFORNIA OR ITS OFFICERS OR AGENTS SHALL NOT BE RESPONSIBLE FOR THE ACCURACY OR COMPLETENESS OF SCANNED COPIES OF THIS PLAN SHEET.

TO ACCOMPANY PLANS DATED _____

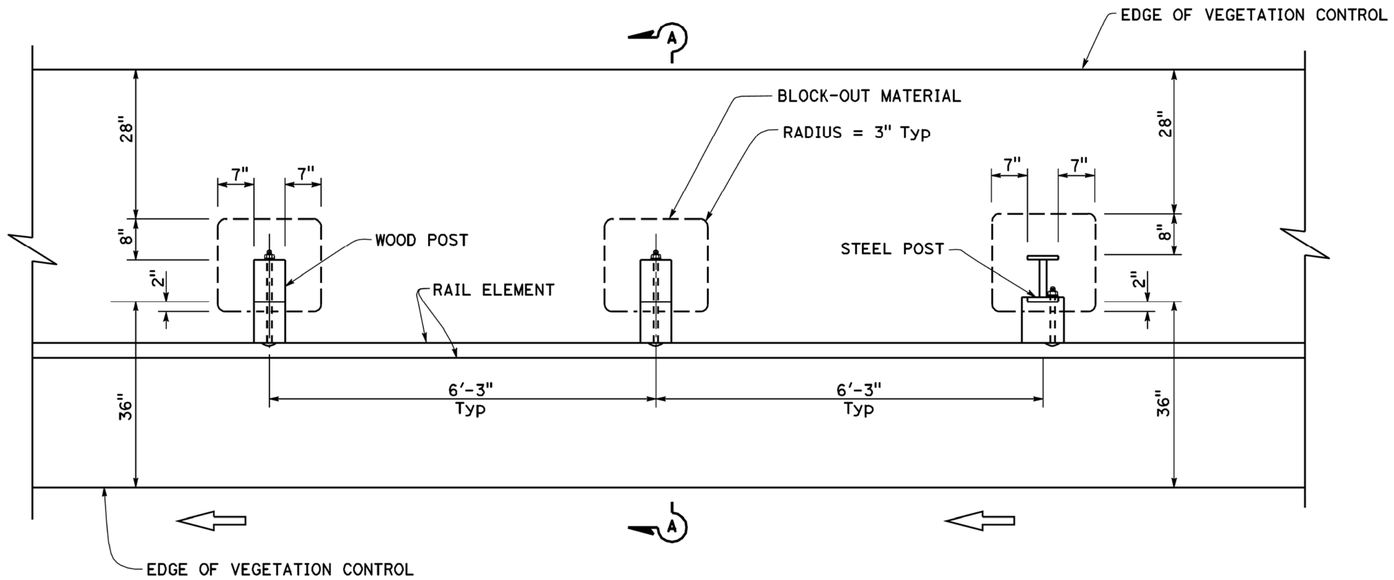

PLAN

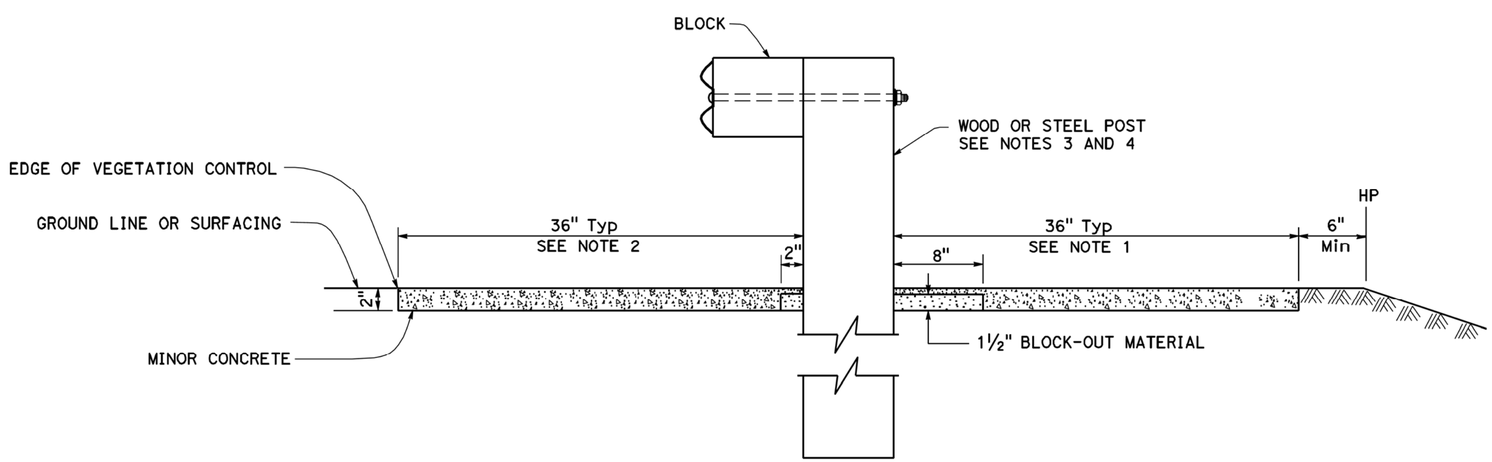

SECTION A-A

NOTES:

1. Where the distance between back of post and hinge point is less than 42", construct vegetation control to 6" from hinge point while maintaining the 8" block-out at back of post. If the 8" block-out at back of post can not be maintained, construct vegetation control flush with the back edge of post.
2. Where dike is constructed under railing, construct vegetation control to back edge of dike. Where paved shoulder is constructed within 36" in front of the post, construct vegetation control to the edge of paved shoulder.
3. For wood post sizes, see Revised Standard Plan RSP A77N1.
4. For steel post sizes, see Revised Standard Plan RSP A77N2.
5. For details not shown, see Revised Standard Plans RSP A77L1 and RSP A77L2.

STATE OF CALIFORNIA
DEPARTMENT OF TRANSPORTATION

MIDWEST GUARDRAIL SYSTEM TYPICAL VEGETATION CONTROL STANDARD RAILING SECTION

NO SCALE

RSP A77N5 DATED JULY 19, 2013 SUPPLEMENTS THE STANDARD PLANS BOOK DATED 2010.

REVISED STANDARD PLAN RSP A77N5

2010 REVISED STANDARD PLAN RSP A77N5

7-3-13

Dist	COUNTY	ROUTE	POST MILES TOTAL PROJECT	SHEET No.	TOTAL SHEETS
04	CC/Mrn	580	5.0/7.8, 0.0/3.3	407	579

Randell D. Hiatt
REGISTERED CIVIL ENGINEER

July 19, 2013
PLANS APPROVAL DATE

REGISTERED PROFESSIONAL ENGINEER Randell D. Hiatt No. C50200 Exp. 6-30-15 CIVIL STATE OF CALIFORNIA

THE STATE OF CALIFORNIA OR ITS OFFICERS OR AGENTS SHALL NOT BE RESPONSIBLE FOR THE ACCURACY OR COMPLETENESS OF SCANNED COPIES OF THIS PLAN SHEET.

TO ACCOMPANY PLANS DATED _____

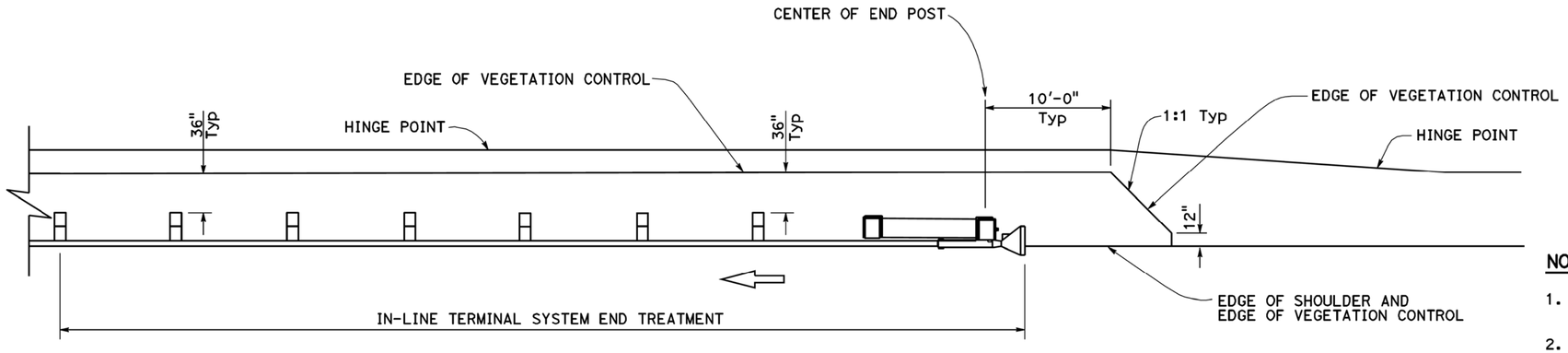

PLAN

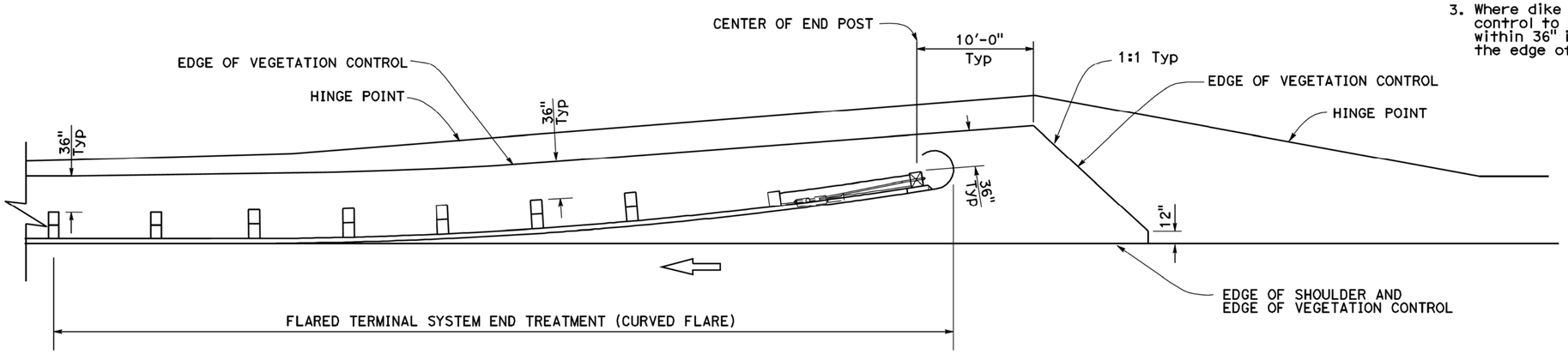

PLAN

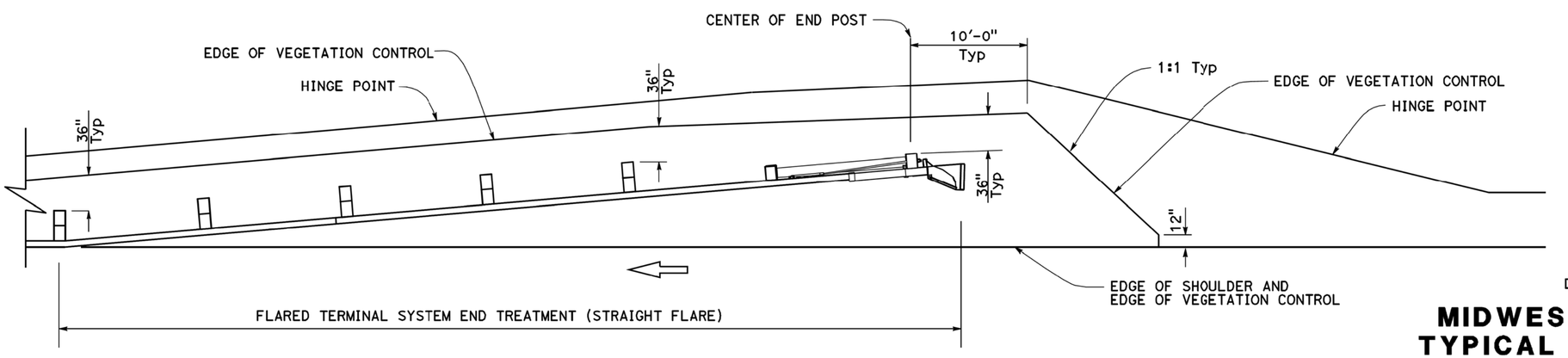

PLAN

NOTES:

1. See Revised Standard Plan RSP A77N5 for additional vegetation control details.
2. Where the distance between back of post and hinge point is less than 42", construct vegetation control to 6" from hinge point while maintaining the 8" block-out at back of post. If the 8" block-out at back of post can not be maintained, construct vegetation control flush with the back edge of post.
3. Where dike is constructed under railing, construct vegetation control to back edge of dike. Where paved shoulder is constructed within 36" in front of the post, construct vegetation control to the edge of paved shoulder.

STATE OF CALIFORNIA
DEPARTMENT OF TRANSPORTATION

MIDWEST GUARDRAIL SYSTEM TYPICAL VEGETATION CONTROL FOR TERMINAL SYSTEM END TREATMENTS

NO SCALE

RSP A77N6 DATED JULY 19, 2013 SUPPLEMENTS THE STANDARD PLANS BOOK DATED 2010.

REVISED STANDARD PLAN RSP A77N6

2010 REVISED STANDARD PLAN RSP A77N6

6-12-13

Dist	COUNTY	ROUTE	POST MILES TOTAL PROJECT	SHEET No.	TOTAL SHEETS
04	CC/Mrn	580	5.0/7.8, 0.0/3.3	408	579

Randell D. Hiatt
REGISTERED CIVIL ENGINEER

November 15, 2013
PLANS APPROVAL DATE

REGISTERED PROFESSIONAL ENGINEER Randell D. Hiatt No. C50200 Exp. 6-30-15 CIVIL STATE OF CALIFORNIA

THE STATE OF CALIFORNIA OR ITS OFFICERS OR AGENTS SHALL NOT BE RESPONSIBLE FOR THE ACCURACY OR COMPLETENESS OF SCANNED COPIES OF THIS PLAN SHEET.

TO ACCOMPANY PLANS DATED _____

2010 REVISED STANDARD PLAN RSP A77P1

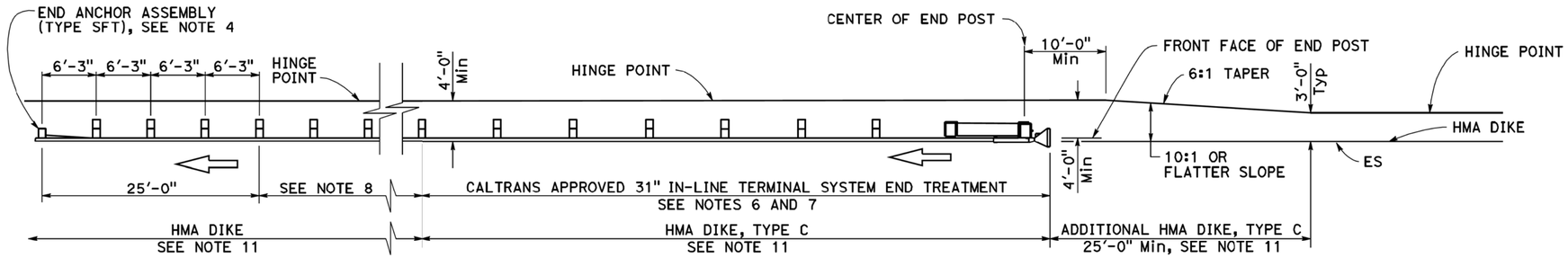

TYPE 11A LAYOUT

(Embankment MGS installation with 31" in-line end treatment at traffic approach end of railing) see Note 5

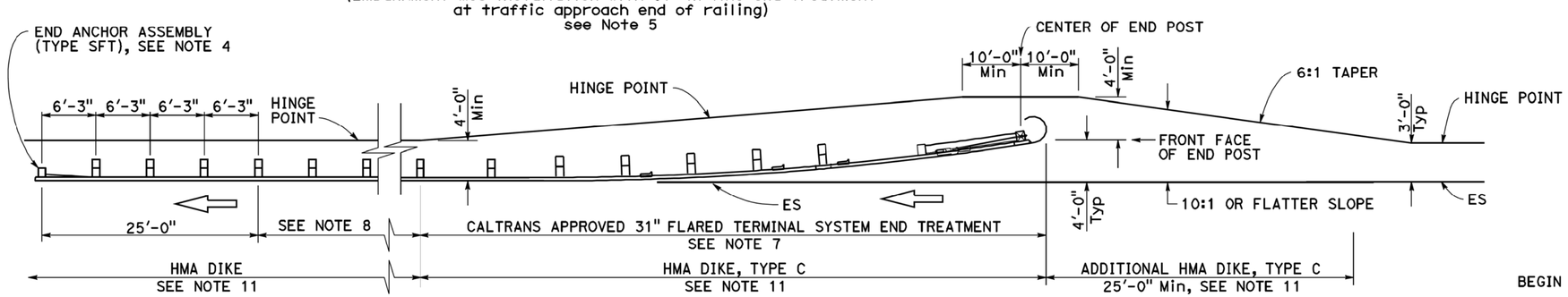

TYPE 11B LAYOUT

(Embankment MGS installation with 31" flared end treatment at traffic approach end of railing) see Note 5

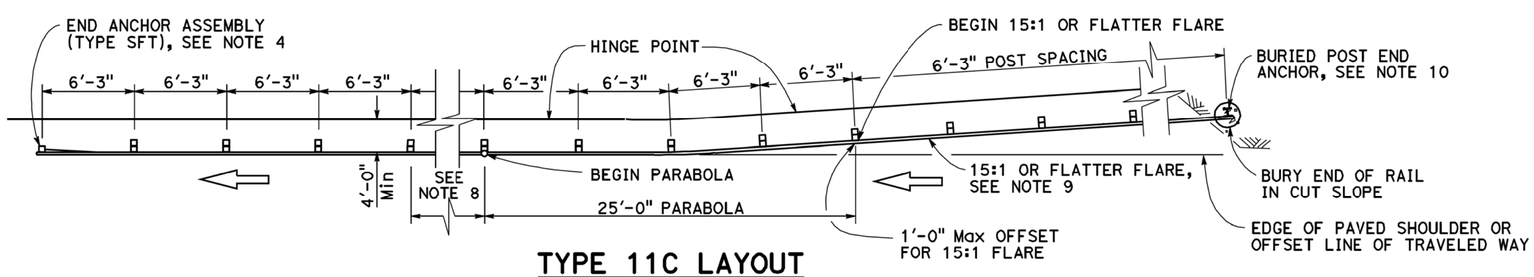

TYPE 11C LAYOUT

(Embankment MGS installation with buried end anchor treatment at traffic approach end of railing) see Notes 5 and 11

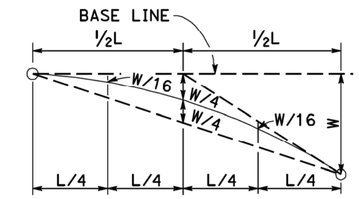

TYPICAL PARABOLIC LAYOUT

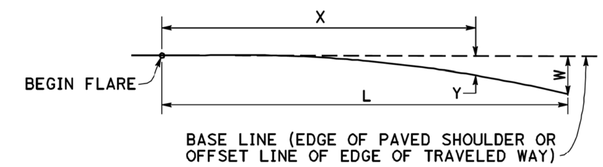

$$Y = \frac{WX^2}{L^2}$$

Y = OFFSET FROM BASE LINE
W = MAXIMUM OFFSET
X = DISTANCE ALONG BASE LINE
L = LENGTH OF FLARE

PARABOLIC FLARE OFFSETS

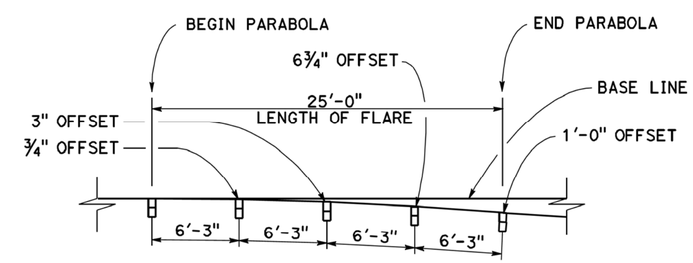

TYPICAL FLARE OFFSETS FOR 1 FOOT Max END OFFSET

NOTES:

1. Line post, blocks and hardware to be used are shown on Revised Standard Plans RSP A77L1, RSP A77L2, RSP A77M1, RSP A77N1 and RSP A77N2.
2. MGS post spacing to be 6'-3" center to center, except as otherwise noted.
3. Except as noted, line posts are 6" x 8" x 6'-0" wood with 6" x 12" x 1'-2" wood blocks. W6 x 8.5 or W6 x 9 steel posts, 6'-0" in length, with 6" x 12" x 1'-2" notched wood blocks or recycled plastic blocks may be used for 6" x 8" x 6'-0" wood post with 6" x 12" x 1'-2" wood blocks where applicable and when specified.
4. For End Anchor Assembly (Type SFT) details, see Revised Standard Plan RSP A77S1.
5. Layout Types 11A, 11B or 11C are typically used where MGS is recommended to shield embankment slopes and a crashworthy end treatment is required for only one direction of traffic.
6. 31" in-line terminal system end treatments are used where site conditions will not accommodate a flared end treatment.
7. The type of 31" terminal system end treatment to be used will be shown on the Project Plans.
8. Dependent on site conditions (embankment height and side slope), construction of additional MGS (length equal to multiples of 12'-6" with 6'-3" post spacing) may be advisable.
9. The 15:1 or flatter flare used with buried end anchors is based on the edge of the paved shoulder or offset line of edge of the traveled way. The length of MGS within the 15:1 or flatter flare is based on site conditions and should be a length equal to multiples of 12'-6".
10. For details of the buried post end anchor used with Type 11C Layout, see Revised Standard Plan RSP A77T2.
11. Where placement of dike is required with MGS installations, see Revised Standard Plan RSP A77N4 for dike positioning details.

STATE OF CALIFORNIA
DEPARTMENT OF TRANSPORTATION

MIDWEST GUARDRAIL SYSTEM TYPICAL LAYOUTS FOR EMBANKMENTS

NO SCALE

RSP A77P1 DATED NOVEMBER 15, 2013 SUPERSEDES RSP A77P1 DATED JULY 19, 2013 THAT SUPPLEMENTS THE STANDARD PLANS BOOK DATED 2010.

REVISED STANDARD PLAN RSP A77P1

10-4-13

Dist	COUNTY	ROUTE	POST MILES TOTAL PROJECT	SHEET No.	TOTAL SHEETS
04	CC/Mrn	580	5.0/7.8, 0.0/3.3	409	579

Randell D. Hiatt
REGISTERED CIVIL ENGINEER

August 14, 2015
PLANS APPROVAL DATE

REGISTERED PROFESSIONAL ENGINEER
Randell D. Hiatt
No. C50200
Exp. 6-30-17
CIVIL
STATE OF CALIFORNIA

THE STATE OF CALIFORNIA OR ITS OFFICERS OR AGENTS SHALL NOT BE RESPONSIBLE FOR THE ACCURACY OR COMPLETENESS OF SCANNED COPIES OF THIS PLAN SHEET.

TO ACCOMPANY PLANS DATED _____

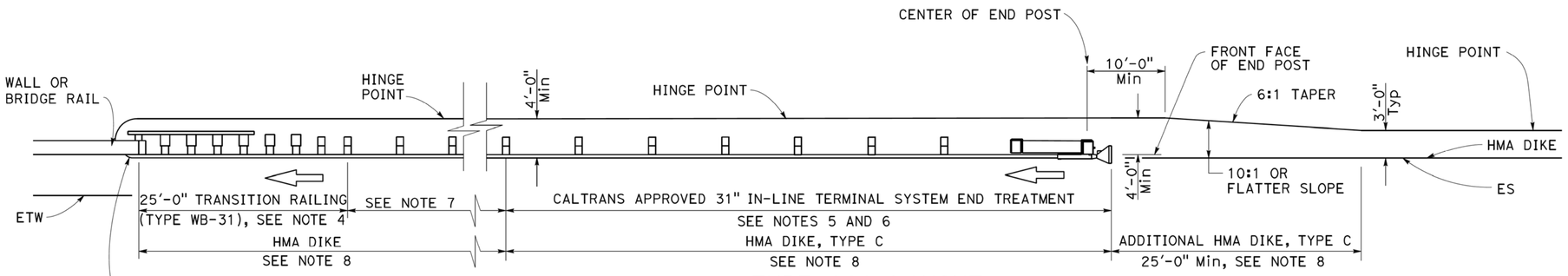

TYPE 12A LAYOUT

(MGS installation at structure approach with
31" In-line end treatment at traffic approach end of railing)
See Note 9

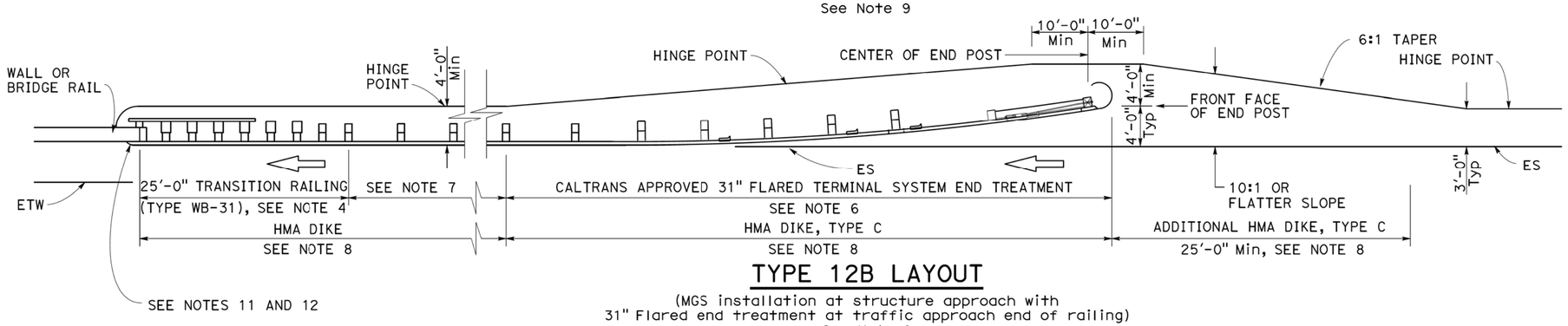

TYPE 12B LAYOUT

(MGS installation at structure approach with
31" Flared end treatment at traffic approach end of railing)
See Note 9

NOTES:

1. Line post, blocks and hardware to be used are shown on Revised Standard Plans RSP A77L1, RSP A77L2, RSP A77M1, RSP A77N1 and RSP A77N2.
2. MGS post spacing to be 6'-3" center to center, except as otherwise noted.
3. Except as noted, line posts are 6" x 8" x 6'-0" wood with 6" x 12" x 1'-2" wood blocks. W6 x 8.5 or W6 x 9 steel posts, 6'-0" in length, with 6" x 12" x 1'-2" notched wood blocks or plastic blocks may be used for 6" x 8" x 6'-0" wood posts with 6" x 12" x 1'-2" wood blocks where applicable and when specified.
4. For Transition Railing (Type WB-31) details for Types 12A and 12B Layouts, see Revised Standard Plan RSP A77U4.
5. 31" in-line terminal system end treatments are used where site conditions will not accommodate a 31" flared end treatment.
6. The type of 31" terminal system end treatment to be used will be shown on the Project Plans.
7. Dependent on site conditions (embankment height, side slopes, or other fixed objects), it may be advisable to construct additional guard railing (a length equal to multiples of 12'-6" with 6'-3" post spacing) between the transition railing and end treatment. A 12.5 degree angle of departure can be drawn on the Project Plans from the edge of traveled way through the outer most point of the fixed object to determine the additional length of railing needed.
8. Where placement of dike is required with guard railing installations, see Revised Standard Plan RSP A77N4 for dike positioning details.
9. Type 12A or Type 12B Layouts are typically used:
   a. To the right of approaching traffic, at the end of a structure, on two-lane conventional highway where the roadbed width across the structure is less than 40 feet.
   b. To the left of approaching traffic, at the end of a structure, on two-lane conventional highway where the roadbed width across the structure is less than 40 feet.
   c. To the right of approaching traffic at the end of each structure on multilane freeways or expressways with separate adjacent or parallel bridges.
   d. To the right of approaching traffic at the end of the structure on multilane freeways or expressways with decked median on the bridge.
10. See Revised Standard Plan RSP A77Q3 for typical layout used left of approaching traffic at the ends of each structure on multilane freeways or expressways with separate adjacent or parallel bridges.
11. For additional details of typical connections to bridge rail, see Connection Detail AA on Revised Standard Plans RSP A77U1 and RSP A77U2 and Connection Detail FF on Revised Standard Plans RSP A77V1 and RSP A77V2.
12. For additional details of a typical connection to walls or abutments, see Revised Standard Plan RSP A77U3.

STATE OF CALIFORNIA
DEPARTMENT OF TRANSPORTATION

MIDWEST GUARDRAIL SYSTEM TYPICAL LAYOUTS FOR STRUCTURE APPROACH

NO SCALE

RSP A77Q1 DATED AUGUST 14, 2015 SUPERSEDES RSP A77Q1 DATED JULY 19, 2013 THAT SUPPLEMENTS THE STANDARD PLANS BOOK DATED 2010.

REVISED STANDARD PLAN RSP A77Q1

2010 REVISED STANDARD PLAN RSP A77Q1

8-12-15

Dist	COUNTY	ROUTE	POST MILES TOTAL PROJECT	SHEET No.	TOTAL SHEETS
04	CC/Mrn	580	5.0/7.8, 0.0/3.3	410	579

Randell D. Hiatt
REGISTERED CIVIL ENGINEER

August 14, 2015
PLANS APPROVAL DATE

REGISTERED PROFESSIONAL ENGINEER Randell D. Hiatt No. C50200 Exp. 6-30-17 CIVIL STATE OF CALIFORNIA

THE STATE OF CALIFORNIA OR ITS OFFICERS OR AGENTS SHALL NOT BE RESPONSIBLE FOR THE ACCURACY OR COMPLETENESS OF SCANNED COPIES OF THIS PLAN SHEET.

TO ACCOMPANY PLANS DATED _____

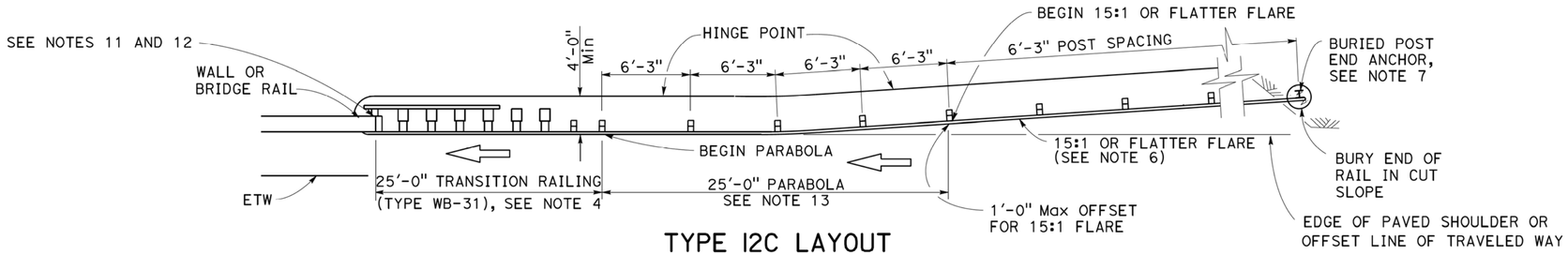

TYPE 12C LAYOUT

(MGS installation at structure approach with a Buried end anchor treatment at traffic approach end of railing)
See Notes 8 and 9

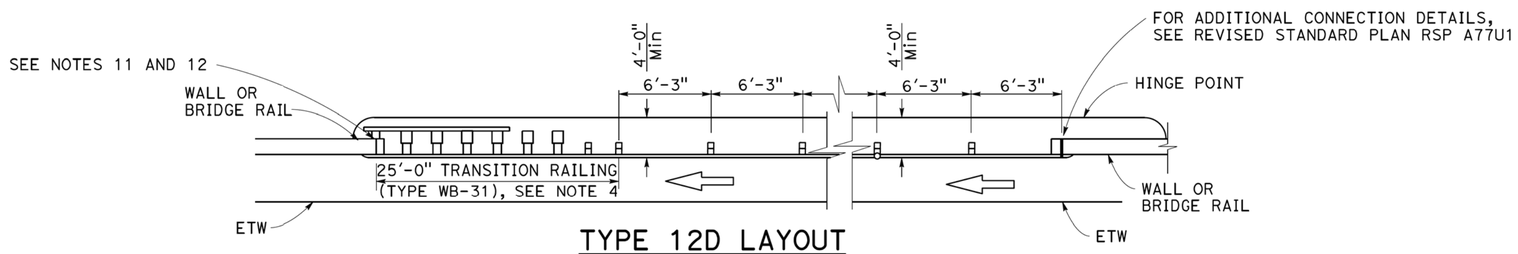

TYPE 12D LAYOUT

(Continuous MGS installation between structures)
See Notes 5 and 9

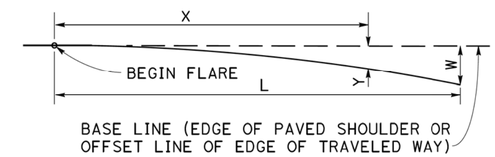

BASE LINE (EDGE OF PAVED SHOULDER OR OFFSET LINE OF EDGE OF TRAVELED WAY)

$$Y = \frac{WX^2}{L^2}$$

Y = OFFSET FROM BASE LINE
W = MAXIMUM OFFSET
X = DISTANCE ALONG BASE LINE
L = LENGTH OF FLARE

PARABOLIC FLARE OFFSETS

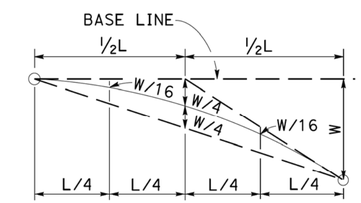

TYPICAL PARABOLIC LAYOUT

NOTES:

1. Line post, blocks and hardware to be used are shown on Revised Standard Plans RSP A77L1, RSP A77L2, RSP A77M1, RSP A77N1 and RSP A77N2.
2. MGS post spacing to be 6'-3" center to center, except as otherwise noted.
3. Except as noted, line posts are 6" x 8" x 6'-0" m wood with 6" x 12" x 1'-2" wood blocks. W6 x 8.5 or W6 x 9 steel posts, 6'-0" in length, with 6" x 12" x 1'-2" notched wood blocks or plastic blocks may be used for 6" x 8" x 6'-0" wood posts with 6" x 12" x 1'-2" wood blocks where applicable and when specified.
4. For Transition Railing (Type WB-31) details for Types 12C and 12D Layouts, see Revised Standard Plan RSP A77U4.
5. Type 12D layout is typically used where continous MGS is recommended between structures.
6. The 15:1 or flatter flare for Type 12C Layout is based on the edge of the paved shoulder or offset line of edge of the traveled way. The length of MGS with the 15:1 or flatter flare is based on site conditions and should be a length equal to multiples of 12'-6".
7. For details of the buried post end anchor used with Type 12C Layout, see Revised Standard Plan RSP A77T2.
8. Where placement of dike is required with MGS installations, see Revised Standard Plan RSP A77N4 for dike positioning details.
9. Type 12C Layout is typically used:
   a. To the right of approaching traffic, at the end of the structure, on two-lane conventional highway where the roadbed width across the structure is less than 40 feet.
   b. To the left of approaching traffic, at each of a structure, on two-lane conventional highway where the roadbed width across the structure is less than 40 feet.
   c. To the right of approaching traffic at the end of each structure on multilane freeways or expressways with separate adjacent or parallel bridges.
   d. To the right of approaching traffic at the end of the structure on multilane freeways or expressways with decked median on the bridge.
10. See Revised Standard Plan RSP A77Q3 for typical layout used left of approaching traffic at the ends of each structure on multilane freeways or expressways with separate adjacent or parallel bridges.
11. For additional details of typical connections to bridge rail, see Connection Detail AA on Revised Standard Plans RSP A77U1 and RSP A77U2 and Connection Detail FF on Revised Standard Plans RSP A77V1 and RSP A77V2.
12. For additional details of a typical connection to walls or abutments, see Revised Standard Plan RSP A77U3.
13. For typical flare offsets for 25'-0" length parabola with maximum offset of 1'-0", see Revised Standard Plan RSP A77P1.

STATE OF CALIFORNIA
DEPARTMENT OF TRANSPORTATION

MIDWEST GUARDRAIL SYSTEM TYPICAL LAYOUTS FOR STRUCTURE APPROACH AND BETWEEN STRUCTURES

NO SCALE

RSP A77Q2 DATED AUGUST 14, 2015 SUPERSEDES RSP A77Q2 DATED JULY 19, 2013 THAT SUPPLEMENTS THE STANDARD PLANS BOOK DATED 2010.

REVISED STANDARD PLAN RSP A77Q2

2010 REVISED STANDARD PLAN RSP A77Q2

8-12-15

Dist	COUNTY	ROUTE	POST MILES TOTAL PROJECT	SHEET No.	TOTAL SHEETS
04	CC/Mrn	580	5.0/7.8, 0.0/3.3	411	579

Randell D. Hiatt
REGISTERED CIVIL ENGINEER

August 14, 2015
PLANS APPROVAL DATE

REGISTERED PROFESSIONAL ENGINEER
Randell D. Hiatt
No. C50200
Exp. 6-30-17
CIVIL
STATE OF CALIFORNIA

THE STATE OF CALIFORNIA OR ITS OFFICERS OR AGENTS SHALL NOT BE RESPONSIBLE FOR THE ACCURACY OR COMPLETENESS OF SCANNED COPIES OF THIS PLAN SHEET.

TO ACCOMPANY PLANS DATED _____

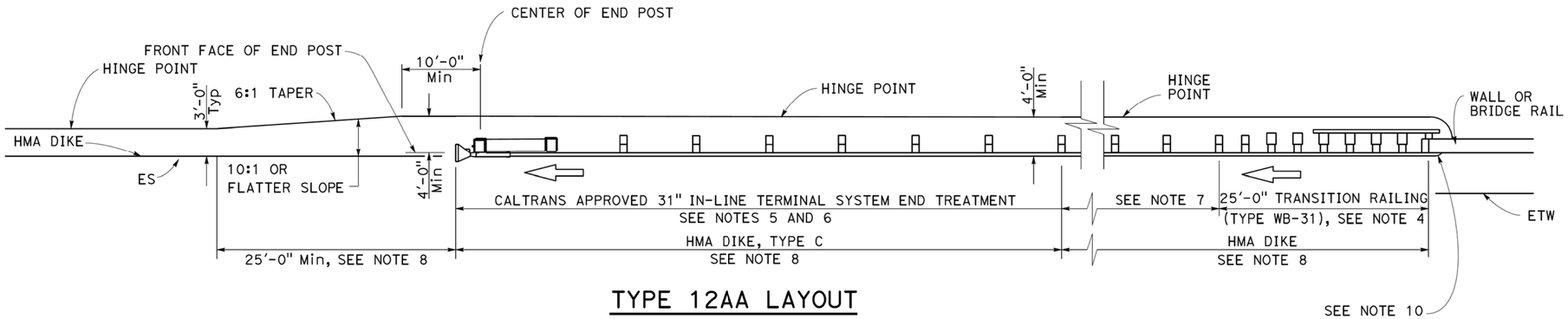

TYPE 12AA LAYOUT

(MGS installation at structure departure with
31" in-line end treatment at trailing end of railing)
See Notes 8 and 9

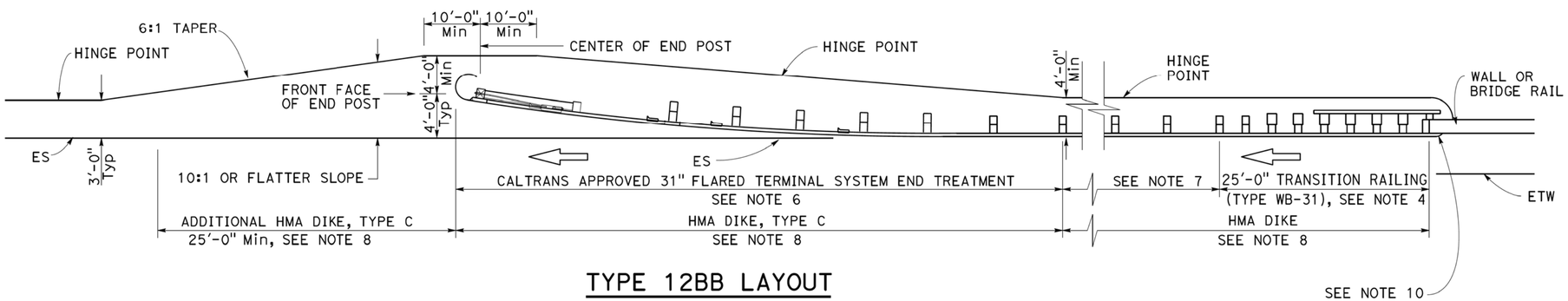

TYPE 12BB LAYOUT

(MGS installation at structure departure with
31" flared end treatment at trailing end of railing)
See Notes 8 and 9

NOTES:

1. Line post, blocks and hardware to be used are shown on Revised Standard Plans RSP A77L1, RSP A77L2, RSP A77M1, RSP A77N1 and RSP A77N2.
2. MGS post spacing to be 6'-3" center to center, except as otherwise noted.
3. Except as noted, line posts are 6" x 8" x 6'-0" wood with 6" x 12" x 1'-2" wood blocks. W6 x 8.5 or W6 x 9 steel posts, 6'-0" in length, with 6" x 12" x 1-2" notched wood blocks or notched recycled plastic blocks may be used for 6" x 8" x 6'-0" wood posts with 6" x 12" x 1'-2" wood blocks where applicable and when specified.
4. For Transition Railing (Type WB-31) details for Types 12AA and 12BB Layouts, see Revised Standard Plan RSP A77U4.
5. 31" in-line terminal system treatments are used where site conditions will not accommodate a 31" flared end treatment.
6. The type of 31" terminal system to be used will be shown on the Project Plans.
7. Dependent on site conditions (embankment height, side slopes, other fixed objects), it may be advisable to construct additional MGS (a length equal to multiples of 12'-6" with 6'-3" post spacing) between the transition railing and 31" end treatments.
8. Where placement of dike is required with MGS installations, see Revised Standard Plan RSP A77N4 for dike positioning details.
9. Type 12AA or Type 12BB Layouts are typically used to the right of traffic departing a structure on two-way conventional highways where the roadbed width across the structure is less than 40 feet.
10. For additional details of typical connections to bridge rail, see Connection Detail CC on Revised Standard Plan RSP A77U2 and Connection Detail HH on Revised Standard Plan RSP A77V2.

STATE OF CALIFORNIA
DEPARTMENT OF TRANSPORTATION

MIDWEST GUARDRAIL SYSTEM TYPICAL LAYOUTS FOR STRUCTURE DEPARTURE

NO SCALE

RSP A77Q4 DATED AUGUST 14, 2015 SUPERSEDES RSP A77Q4 DATED JULY 19, 2013 THAT SUPPLEMENTS THE STANDARD PLANS BOOK DATED 2010.

REVISED STANDARD PLAN RSP A77Q4

2010 REVISED STANDARD PLAN RSP A77Q4

8-12-15

Dist	COUNTY	ROUTE	POST MILES TOTAL PROJECT	SHEET No.	TOTAL SHEETS
04	CC/Mrn	580	5.0/7.8, 0.0/3.3	412	579

Randell D. Hiatt
REGISTERED CIVIL ENGINEER

July 19, 2013
PLANS APPROVAL DATE

REGISTERED PROFESSIONAL ENGINEER Randell D. Hiatt No. C50200 Exp. 6-30-15 CIVIL STATE OF CALIFORNIA

THE STATE OF CALIFORNIA OR ITS OFFICERS OR AGENTS SHALL NOT BE RESPONSIBLE FOR THE ACCURACY OR COMPLETENESS OF SCANNED COPIES OF THIS PLAN SHEET.

TO ACCOMPANY PLANS DATED _____

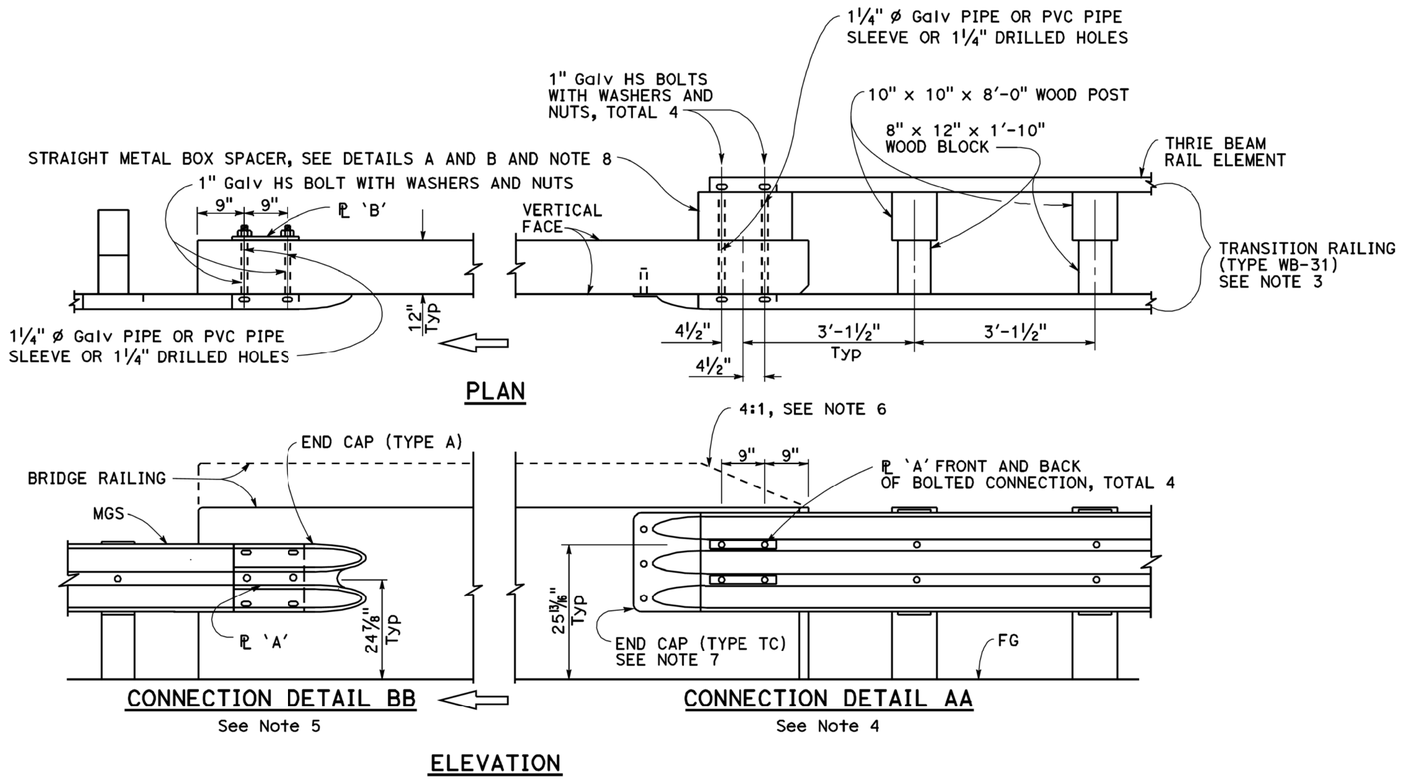

MIDWEST GUARDRAIL SYSTEM CONNECTION TO BRIDGE RAILING WITHOUT SIDEWALK

NOTES:

1. See Revised Standard Plan RSP A77U2 for additional connection details to bridges without sidewalks.
2. Additional details of posts, blocks and hardware are shown on Revised Standard Plans RSP A77M1, RSP A77N1 and RSP A77N2.
3. For additional details of Transition Railing (Type WB-31), see Revised Standard Plan RSP A77U4. Transition Railing (Type WB-31) transitions the 12 gauge MGS railing section to a heavier gage nested thrie beam railing section which is connected to the concrete bridge railing.
4. For typical use of Connection Detail AA, see Layout Types 12A and 12B on Revised Standard Plan RSP A77Q1, Layout Types 12C and 12D on Revised Standard Plan RSP A77Q2, and Layout Type 12E on Revised Standard Plan RSP A77Q3.
5. For typical use of Connection Detail BB, see Layout Type 12D (structure departure railing connection) on Revised Standard Plan RSP A77Q2 and Layout Type 12DD on Revised Standard Plan RSP A77Q5.
6. Where the height of the bridge railing exceeds the height of the thrie beam railing by more than 1" at Connection Detail AA, taper the top of the end of the bridge railing at 4:1 to match the top elevation of the thrie beam rail.
7. For details of End Cap (Type TC), see Revised Standard Plan RSP A77U4.
8. See Revised Standard Plan RSP A77U4 for additional details regarding depth dimension for straight metal box spacer.

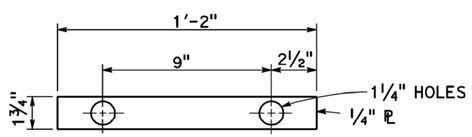

PLATE 'A'

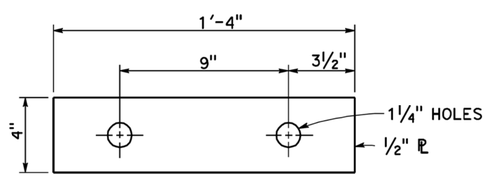

PLATE 'B'
(For backside of connection BB)

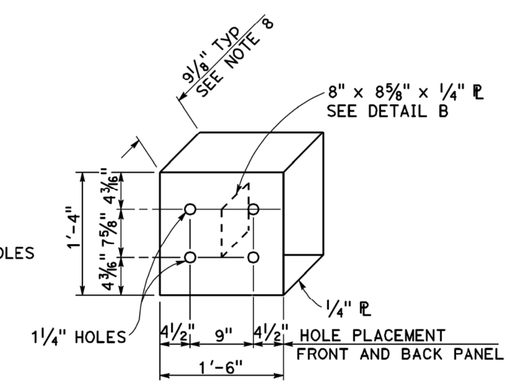

DETAIL A

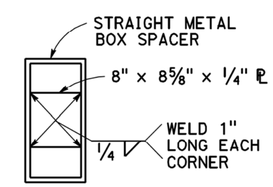

DETAIL B

STRAIGHT METAL BOX SPACER

STATE OF CALIFORNIA
DEPARTMENT OF TRANSPORTATION

MIDWEST GUARDRAIL SYSTEM CONNECTIONS TO BRIDGE RAILINGS WITHOUT SIDEWALKS DETAILS No. 1

NO SCALE

RSP A77U1 DATED JULY 19, 2013 SUPPLEMENTS THE STANDARD PLANS BOOK DATED 2010.

REVISED STANDARD PLAN RSP A77U1

2010 REVISED STANDARD PLAN RSP A77U1

7-8-13

Dist	COUNTY	ROUTE	POST MILES TOTAL PROJECT	SHEET No.	TOTAL SHEETS
04	CC/Mrn	580	5.0/7.8, 0.0/3.3	413	579

Randell D. Hiatt
REGISTERED CIVIL ENGINEER

July 19, 2013
PLANS APPROVAL DATE

REGISTERED PROFESSIONAL ENGINEER Randell D. Hiatt No. C50200 Exp. 6-30-15 CIVIL STATE OF CALIFORNIA

THE STATE OF CALIFORNIA OR ITS OFFICERS OR AGENTS SHALL NOT BE RESPONSIBLE FOR THE ACCURACY OR COMPLETENESS OF SCANNED COPIES OF THIS PLAN SHEET.

TO ACCOMPANY PLANS DATED _____

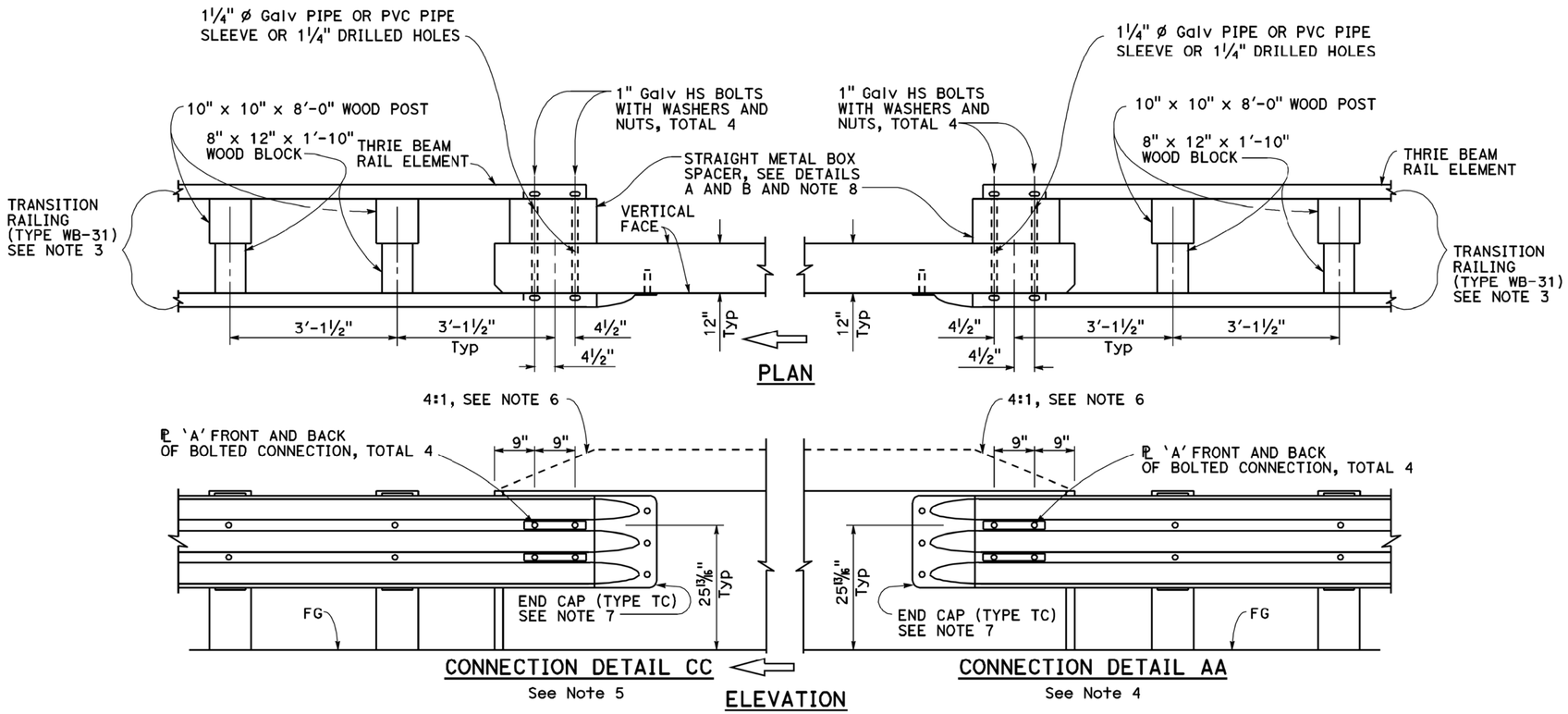

MIDWEST GUARDRAIL SYSTEM CONNECTION TO BRIDGE RAILING WITHOUT SIDEWALK

NOTES:

1. See Revised Standard Plan RSP A77U1 for additional connection details to bridges without sidewalks.
2. Additional details of posts, blocks and hardware are shown on Revised Standard Plans RSP A77M1, RSP A77N1 and RSP A77N2.
3. For additional details of Transition Railing (Type WB-31), see Revised Standard Plan RSP A77U4. Transition Railing (Type WB-31) transitions the 12 gauge MGS railing section to a heavier gage nested thrie beam railing section which is connected to the concrete bridge railing.
4. For typical use of Connection Detail AA, see Layout Types 12A and 12B on Revised Standard Plan RSP A77Q1, Layout Types 12C and 12D on Revised Standard Plan RSP A77Q2, and Layout Type 12E on Revised Standard Plan RSP A77Q3.
5. For typical use of Connection Detail CC, see Layout Types 12AA and 12BB on Revised Standard Plan RSP A77Q4 and Layout Type 12CC on Revised Standard Plan RSP A77Q5.
6. Where the height of the bridge railing exceeds the height of the thrie beam railing by more than 1" at Connection Detail AA and connection Detail CC, taper the top of the end of the bridge railing at 4:1 to match the top elevation of the thrie beam railing.
7. For details of End Cap (Type TC), see Revised Standard Plan RSP A77U4.
8. See Revised Standard Plan RSP A77U4 for additional details regarding depth dimension for straight metal box spacer.

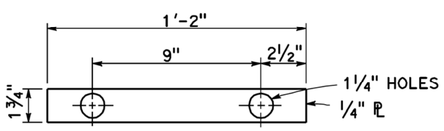

PLATE 'A'

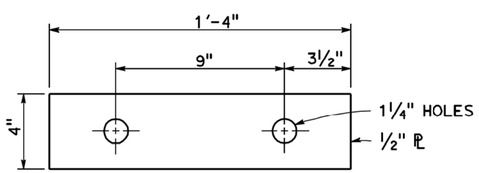

PLATE 'B'
(For backside of connection BB)

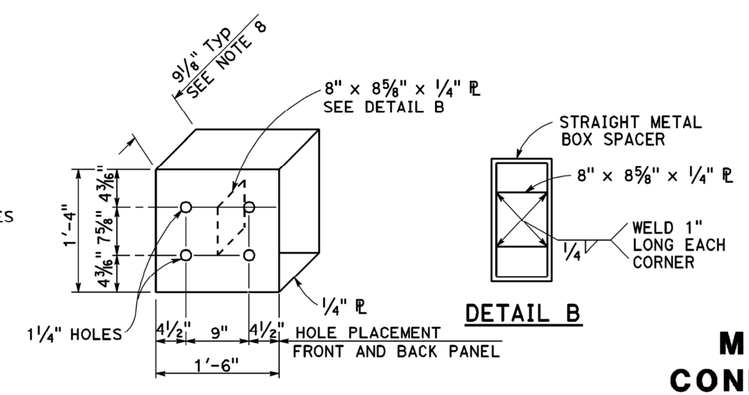

DETAIL B

DETAIL A

STRAIGHT METAL BOX SPACER

STATE OF CALIFORNIA
DEPARTMENT OF TRANSPORTATION

MIDWEST GUARDRAIL SYSTEM CONNECTIONS TO BRIDGE RAILINGS WITHOUT SIDEWALKS DETAILS No. 2

NO SCALE

RSP A77U2 DATED JULY 19, 2013 SUPPLEMENTS THE STANDARD PLANS BOOK DATED 2010.

REVISED STANDARD PLAN RSP A77U2

2010 REVISED STANDARD PLAN RSP A77U2

6-20-13

Dist	COUNTY	ROUTE	POST MILES TOTAL PROJECT	SHEET No.	TOTAL SHEETS
04	CC/Mrn	580	5.0/7.8, 0.0/3.3	414	579

Randell D. Hiatt
REGISTERED CIVIL ENGINEER

January 23, 2015
PLANS APPROVAL DATE

REGISTERED PROFESSIONAL ENGINEER Randell D. Hiatt No. C50200 Exp. 6-30-15 CIVIL STATE OF CALIFORNIA

THE STATE OF CALIFORNIA OR ITS OFFICERS OR AGENTS SHALL NOT BE RESPONSIBLE FOR THE ACCURACY OR COMPLETENESS OF SCANNED COPIES OF THIS PLAN SHEET.

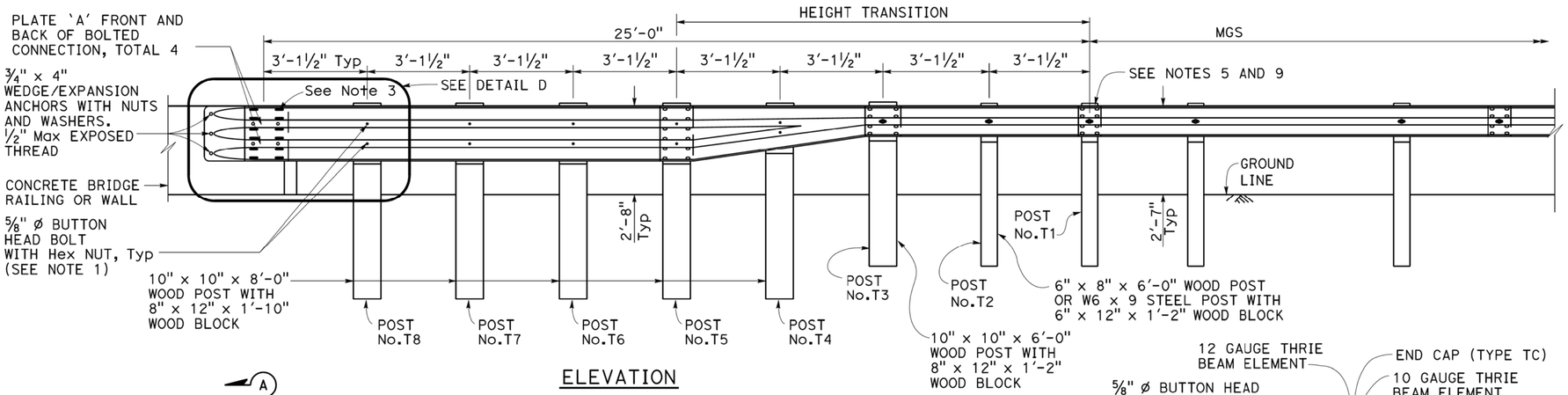

ELEVATION

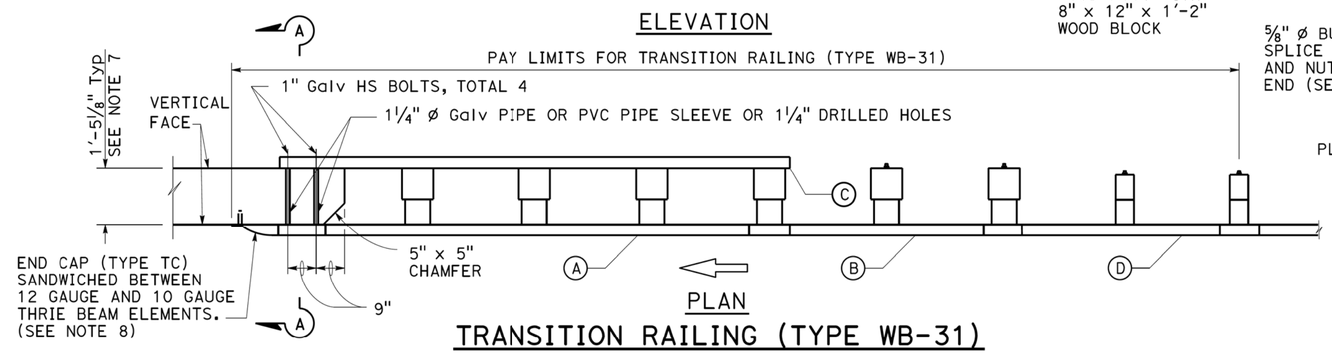

PLAN

TRANSITION RAILING (TYPE WB-31)

(No Blockout Attachment)

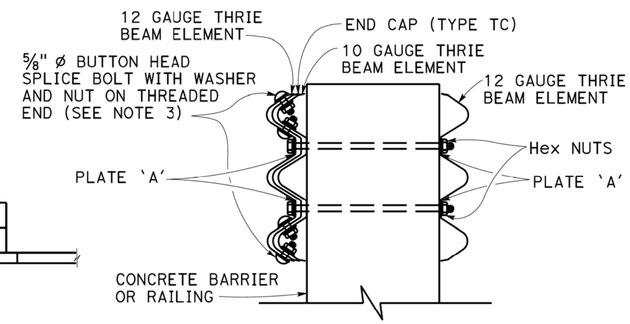

SECTION A-A

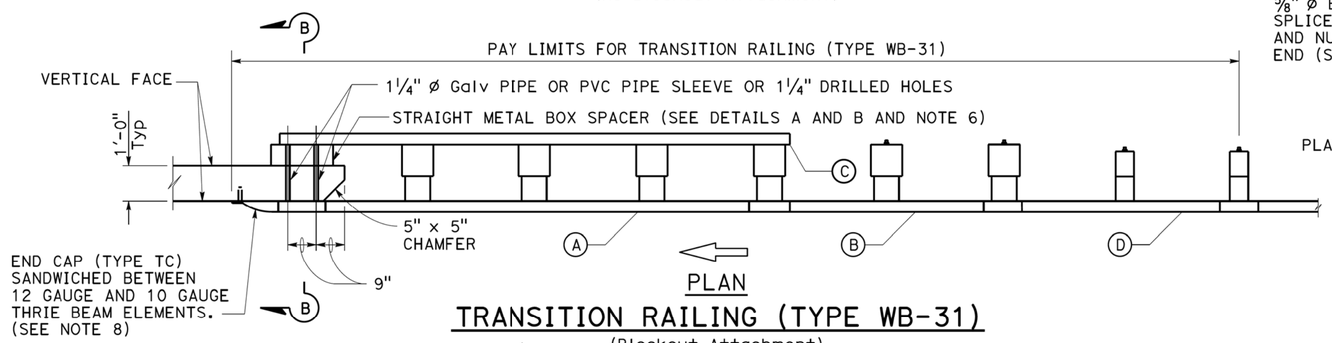

PLAN

TRANSITION RAILING (TYPE WB-31)

(Blockout Attachment)

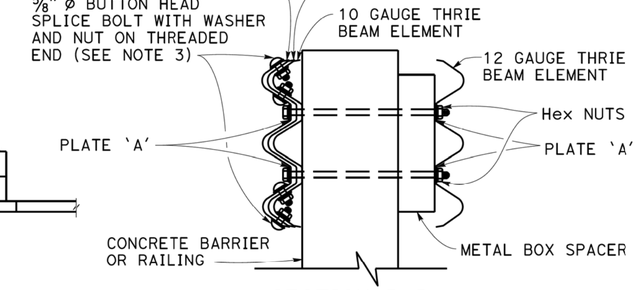

SECTION B-B

LEGEND:

(A) NESTED THRIE BEAM ELEMENTS (ONE 12 GAUGE ELEMENT NESTED OVER ONE 10 GAUGE ELEMENT).

(B) ONE ASYMMETRICAL 10 GAUGE "W" BEAM TO THRIE BEAM ELEMENT.

(C) ONE 12 GAUGE THRIE BEAM ELEMENT.

(D) ONE 10 GAUGE "W" BEAM RAIL ELEMENT (7'-3 1/2" LENGTH)

10 GAUGE = 0.138" THICK
12 GAUGE = 0.108" THICK

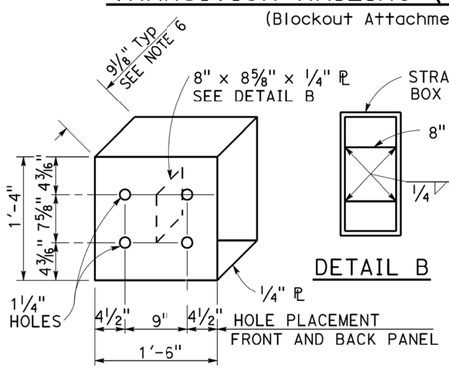

DETAIL A

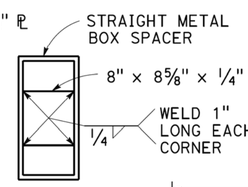

DETAIL B

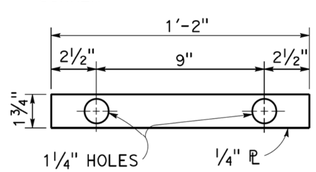

DETAIL C

STRAIGHT METAL BOX SPACER

PLATE 'A'

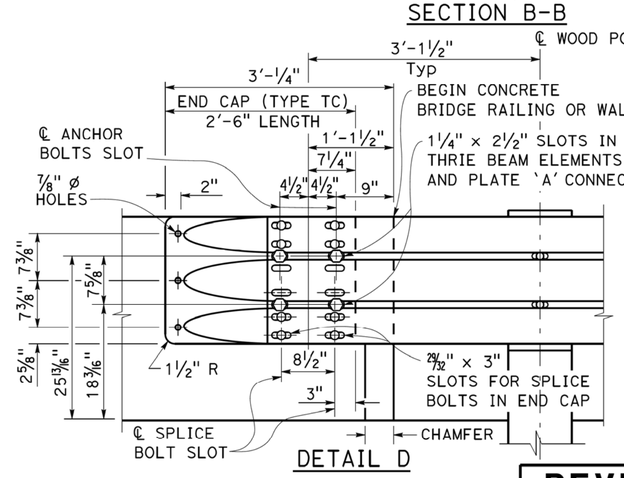

DETAIL D

NOTES:

TO ACCOMPANY PLANS DATED _____

1. Use 5/8" Ø Button head bolts and hex nuts for connections to posts. No washer on rail face for bolted connections to post.
2. The nested rail elements, end cap, and 'W' beam to thrie beam element may be spliced together prior to bolting the elements to the wood post and concrete barrier or railing.
3. Exterior splice bolt holes for rail element splices at Post No. T5 and the connection to the concrete barrier or railing shall be the standard 29/32" x 1 1/8" slot size. Interior splice bolt holes at these locations may be increased up to 1 1/4" Ø. Only the top 4 and the bottom 4 splice bolts with washers and nuts are required for rail splices at Post No. T5 and the connection to the concrete barrier or railing.
4. The top elevation of Posts No. T2 through No. T7 shall not project more than 1" above the top elevation of the rail element.
5. Typically, the railing connected to Transition Railing (Type WB-31) will be either standard railing section of MGS with height transition ratio of 150:1 or a Caltrans approved 31" end treatment attached to Post No. T1.
6. The depth of the metal box spacer varies from the 9 1/8" to 1 1/2" and is dependent on the width of the concrete railing or wall. The combined dimension for the depth of the metal box spacer plus the width of railing or wall is typically 21 1/8". Where the space between the backside of the concrete railing or wall and the rear thrie beam element is less than 1 1/2", metal plates similar to Plate 'A' are to be used as spacers.
7. Where the width of the concrete railing or wall is greater than 17 1/8", wood blocks are to be used to fill the space created between the backside of Posts No. T5 through No. T8 and the rear thrie beam element. These wood blocks shall be 8" in width and 1'-2" in length. The dimension between the front thrie beam element and the rear thrie beam element is to match the width of the concrete railing or wall.
8. End cap may be installed over 12 gauge and 10 gauge thrie beam elements where transition railing is installed on the departure end of bridge railing.
9. Conform standard railing section height to 31" at Post No. T1 using height transition ratio of 150:1.

STATE OF CALIFORNIA
DEPARTMENT OF TRANSPORTATION

MIDWEST GUARDRAIL SYSTEM TRANSITION RAILING (TYPE WB-31)

NO SCALE

RSP A77U4 DATED JANUARY 23, 2015 SUPERSEDES RSP A77U4 DATED NOVEMBER 15, 2013 AND RSP A77U4 DATED JULY 19, 2013 THAT SUPPLEMENTS THE STANDARD PLANS BOOK DATED 2010.

REVISED STANDARD PLAN RSP A77U4

2010 REVISED STANDARD PLAN RSP A77U4

1-8-15

Dist	COUNTY	ROUTE	POST MILES TOTAL PROJECT	SHEET No.	TOTAL SHEETS
04	CC/Mrn	580	5.0/7.8, 0.0/3.3	415	579

REGISTERED CIVIL ENGINEER

July 15, 2016
PLANS APPROVAL DATE

REGISTERED PROFESSIONAL ENGINEER Sukhdeep Singh Sandher No. C74893 Exp. 12-31-17 CIVIL STATE OF CALIFORNIA

THE STATE OF CALIFORNIA OR ITS OFFICERS OR AGENTS SHALL NOT BE RESPONSIBLE FOR THE ACCURACY OR COMPLETENESS OF SCANNED COPIES OF THIS PLAN SHEET.

TO ACCOMPANY PLANS DATED _____

2010 REVISED STANDARD PLAN RSP A85

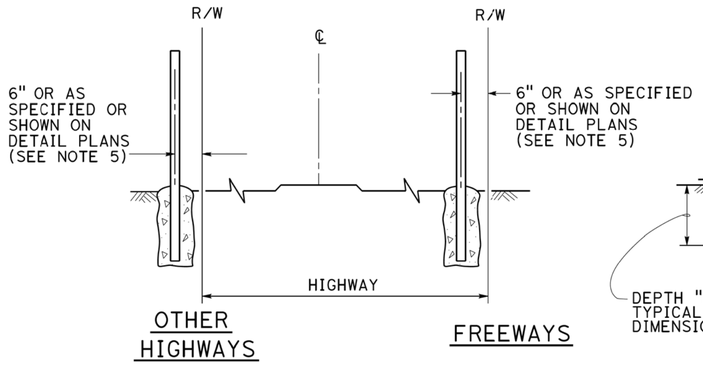

FENCE LOCATION

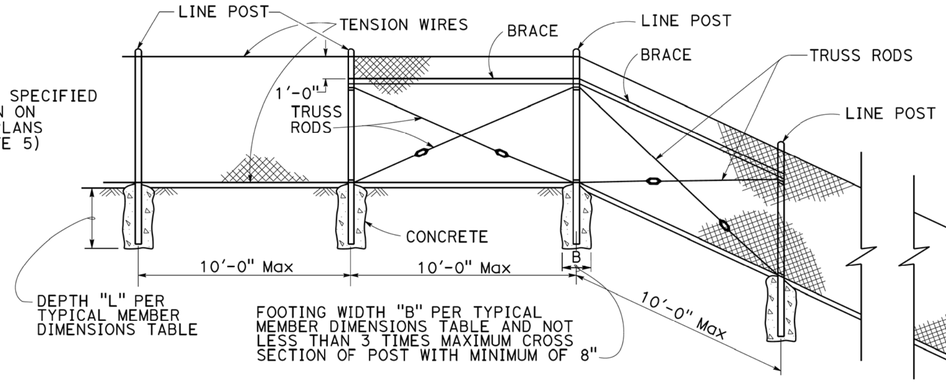

CHAIN LINK FENCE ON SHARP BREAK IN GRADE

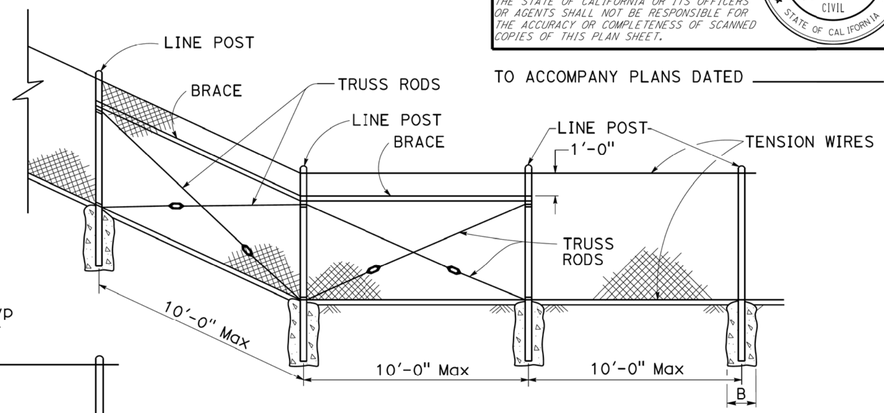

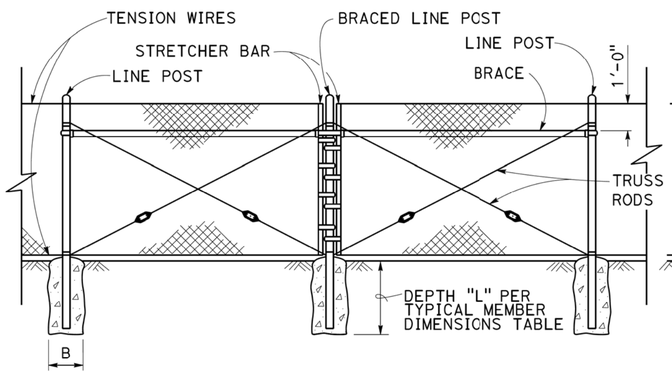

BRACED LINE POST INSTALLATION

Braced line post at intervals not exceeding 1000'

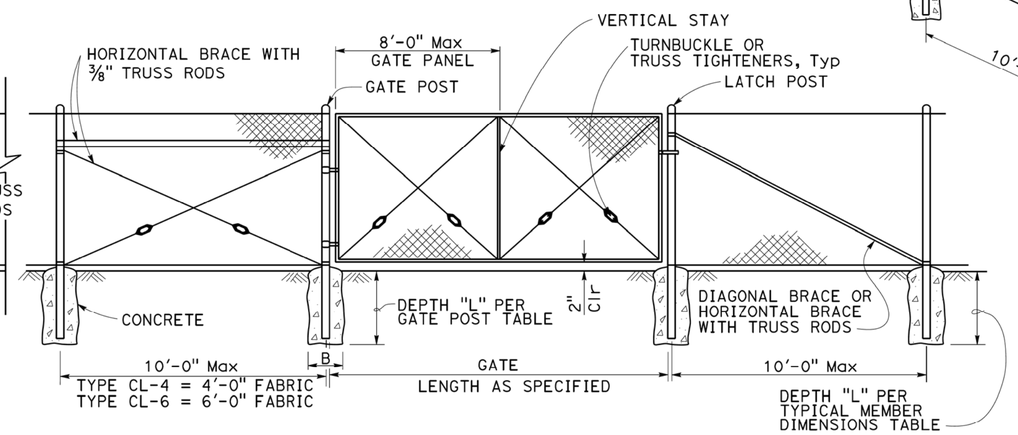

CHAIN LINK GATE INSTALLATION

GATE POST						
FENCE HEIGHT (Max)	SLATTED	B (in)	L (ft)	ROUND PIPE		
				SECTION	ROUND OD PIPE	WEIGHT (lb/ft)
5'-0"	NO	12"	2'-6"	3 Std	3.50"	7.58
6'-0"	NO	12"	2'-6"	3 Std	3.50"	7.58
8'-0"	NO	12"	3'-0"	3 Std	3.50"	7.58
10'-0"	NO	14"	3'-6"	3 Std	3.50"	7.58
5'-0"	YES	12"	3'-0"	3½ Std	4.00"	9.12
6'-0"	YES	14"	3'-6"	4 Std	4.50"	10.80
8'-0"	YES	18"	3'-6"	5 Std	5.56"	14.60
10'-0"	YES	20"	4'-0"	6 Std	6.63"	19.00

Above post dimensions and weights are minimums.
Larger sizes may be used upon approval.
Maximum Gate Width is 24'-0".

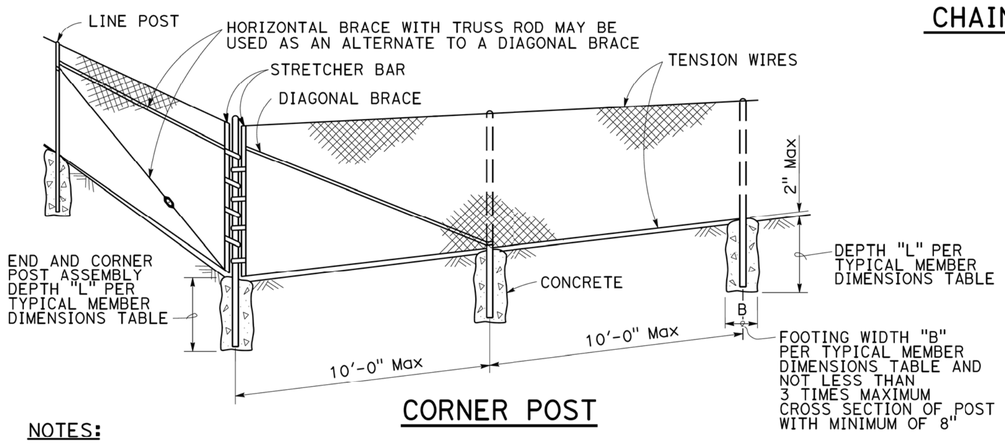

CORNER POST

TYPICAL MEMBER DIMENSIONS (See Notes)													
FENCE HEIGHT (Max)	SLATTED	B (in)	L (ft)	LINE POSTS					BRACES				
				ROUND PIPE			ROLL FORMED		ROUND PIPE			ROLL FORMED	
				SECTION	ROUND OD PIPE	WEIGHT (lb/ft)	SECTION	WEIGHT (lb/ft)	SECTION	ROUND OD PIPE	WEIGHT (lb/ft)	SECTION	WEIGHT (lb/ft)
5'-0"	NO	8"	2'-6"	1½ Std	1.90"	2.72	1.875" x 1.625"	1.85	2 Std	2.38"	3.66	1.625" x 1.250"	1.35
6'-0"	NO	10"	2'-6"	2 Std	2.38"	3.66	1.875" x 1.625"	2.40	2 Std	2.38"	3.66	1.625" x 1.250"	1.35
8'-0"	NO	12"	3'-0"	2½ Std	2.88"	5.80	3.250" x 2.500"	4.50	2 Std	2.38"	3.66	1.625" x 1.250"	1.35
10'-0"	NO	14"	3'-6"	3 Std	3.50"	7.58	3.250" x 2.500"	4.50	2½ Std	2.88"	5.80	1.625" x 1.250"	1.35
5'-0"	YES	12"	3'-0"	3½ Std	4.00"	9.12	N/A	-	2 Std	2.38"	3.66	N/A	-
6'-0"	YES	14"	3'-0"	4 Std	4.50"	10.80	N/A	-	2 Std	2.38"	3.66	N/A	-
8'-0"	YES	18"	3'-6"	5 Std	5.56"	14.60	N/A	-	2 Std	2.38"	3.66	N/A	-
10'-0"	YES	20"	4'-0"	6 Std	6.63"	19.00	N/A	-	2½ Std	2.88"	5.80	N/A	-

NOTES:

1. The table to the right shows minimum sized posts and braces complying with the specifications. Larger or heavier post and brace sizes may be used upon approval.
2. Sections shown in the tables must also comply with the strength requirements and other provisions of the Specifications.
3. Other sections which comply with the strength requirements and other provisions of the Specifications may be used upon approval.
4. Options exercised shall be uniform on any one project.
5. Offset to be 2'-0" at monument locations, measured at right angles to R/W lines. Taper to achieve offset to be at least 20'-0" long.
6. See Revised Standard Plan RSP A85B for Brace, Stretcher Bar, and Truss Tightener Details.

STATE OF CALIFORNIA
DEPARTMENT OF TRANSPORTATION

CHAIN LINK FENCE

NO SCALE

RSP A85 DATED JULY 15, 2016 SUPERSEDES RSP A85 DATED JULY 18, 2014 AND STANDARD PLAN A85 DATED MAY 20, 2011 - PAGE 112 OF THE STANDARD PLANS BOOK DATED 2010.

REVISED STANDARD PLAN RSP A85

6-29-16

Dist	COUNTY	ROUTE	POST MILES TOTAL PROJECT	SHEET No.	TOTAL SHEETS
04	CC/Mrn	580	5.0/7.8, 0.0/3.3	416	579

REGISTERED CIVIL ENGINEER

July 15, 2016

PLANS APPROVAL DATE

REGISTERED PROFESSIONAL ENGINEER Sukhdeep Singh Sandher No. C74893 Exp. 12-31-17 CIVIL STATE OF CALIFORNIA

THE STATE OF CALIFORNIA OR ITS OFFICERS OR AGENTS SHALL NOT BE RESPONSIBLE FOR THE ACCURACY OR COMPLETENESS OF SCANNED COPIES OF THIS PLAN SHEET.

TO ACCOMPANY PLANS DATED _____

2010 REVISED STANDARD PLAN RSP A85A

NOTES:

1. B is not less than 3 times maximum cross section of post with minimum of 8".
2. See Revised Standard Plan RSP A85 for Chain Link Fencing dimensions.
3. See Detail A on Standard Plan A86B for connection at headwall.
4. See Detail D on Standard Plan A86B for connection at headwall.

CENTER POST		
FENCE HEIGHT (Max)	SLATTED	P
ALL HEIGHTS	NO	1'-6"
5'-0"	YES	3'-0"
6'-0"	YES	3'-0"
8'-0"	YES	3'-6"
10'-0"	YES	4'-0"

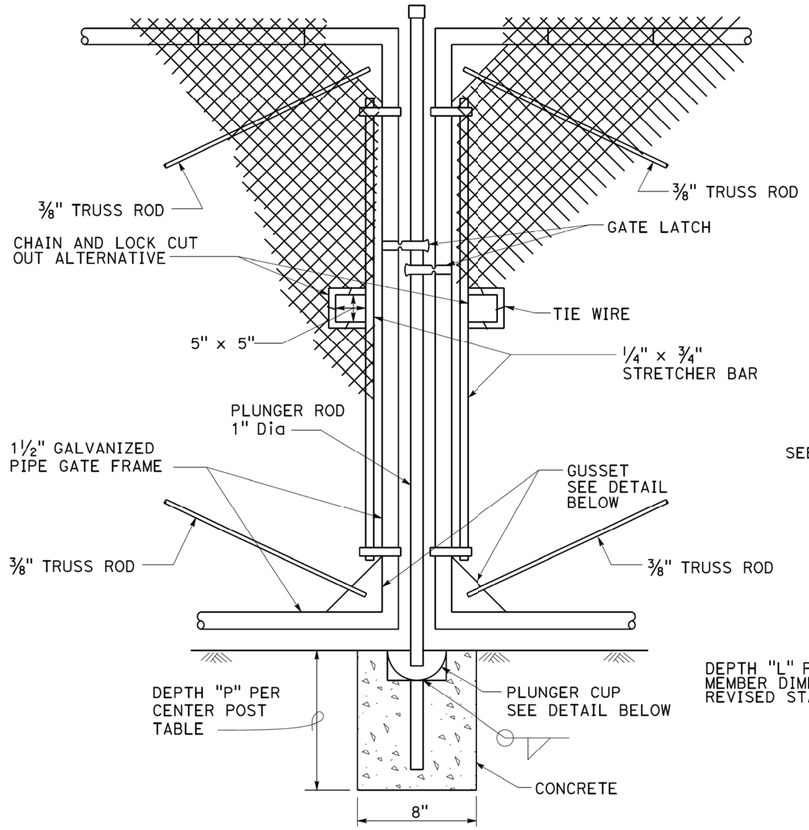

DOUBLE GATE REMOVABLE CENTER POST

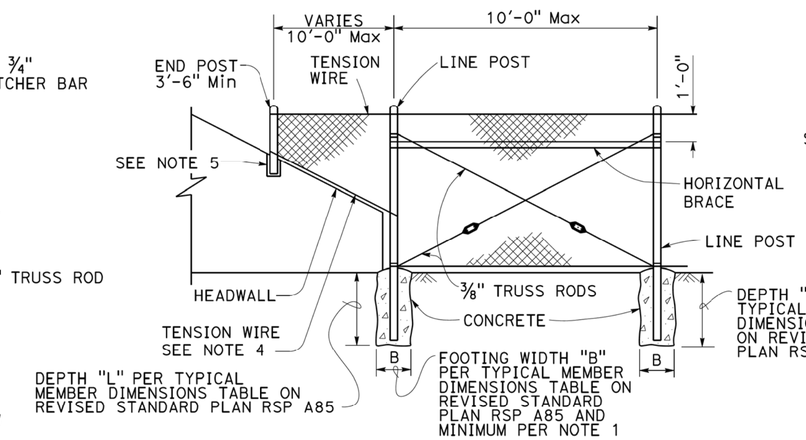

METHOD OF TYING FENCE TO HEADWALL

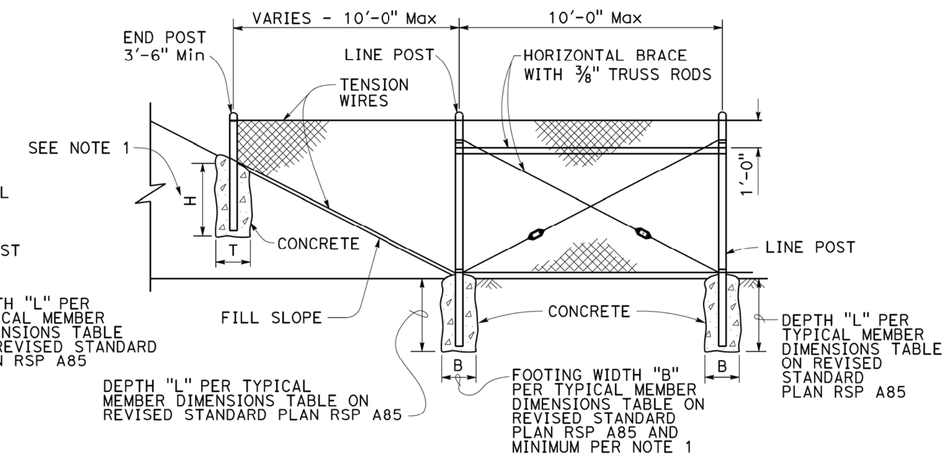

METHOD OF ERECTING FENCE FOR FILL SLOPE

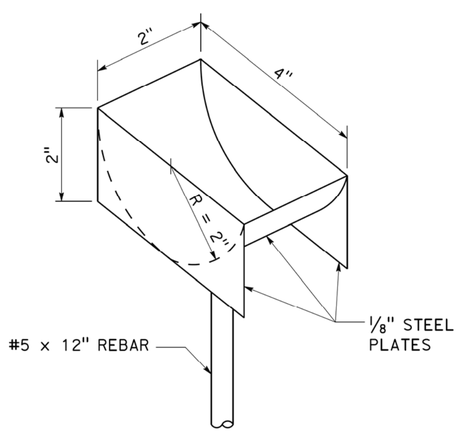

PLUNGER CUP DETAIL

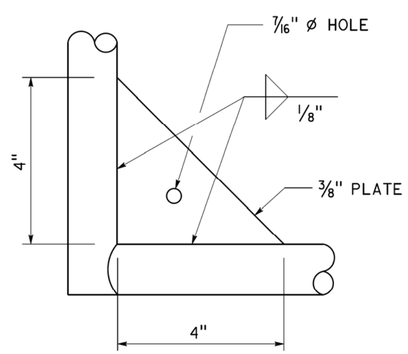

GUSSET DETAIL

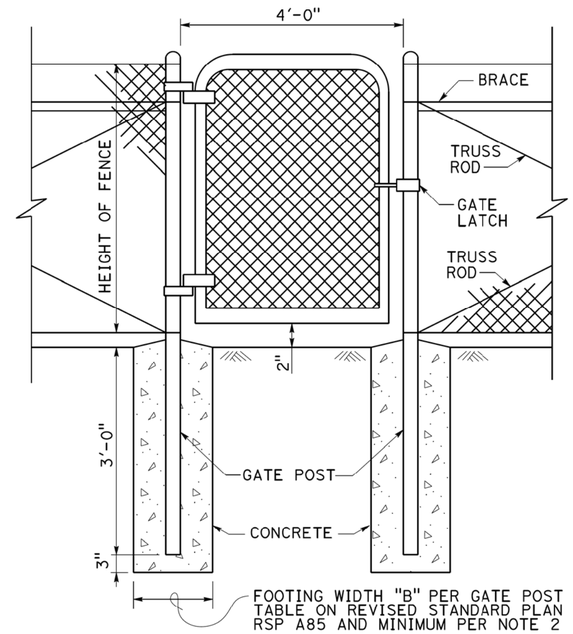

WALK GATE

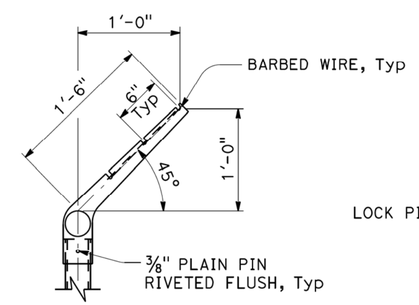

LINE POST

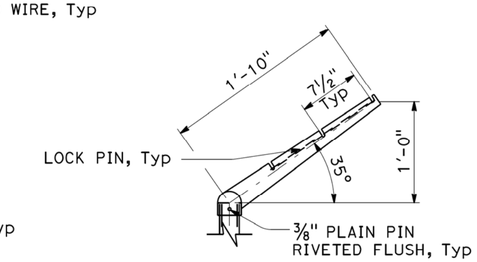

CORNER POST

BARBED WIRE POST TOP

STATE OF CALIFORNIA
DEPARTMENT OF TRANSPORTATION

CHAIN LINK FENCE DETAILS

NO SCALE

RSP A85A DATED JULY 15, 2016 SUPERSEDES STANDARD PLAN A85A DATED MAY 20, 2011 - PAGE 113 OF THE STANDARD PLANS BOOK DATED 2010.

REVISED STANDARD PLAN RSP A85A

6-16-16

Dist	COUNTY	ROUTE	POST MILES TOTAL PROJECT	SHEET No.	TOTAL SHEETS
04	CC/Mrn	580	5.0/7.8, 0.0/3.3	417	579

REGISTERED CIVIL ENGINEER

July 19, 2013
PLANS APPROVAL DATE

REGISTERED PROFESSIONAL ENGINEER Michael Janzen No. 44788 Exp. 03-31-14 CIVIL STATE OF CALIFORNIA

THE STATE OF CALIFORNIA OR ITS OFFICERS OR AGENTS SHALL NOT BE RESPONSIBLE FOR THE ACCURACY OR COMPLETENESS OF SCANNED COPIES OF THIS PLAN SHEET.

TO ACCOMPANY PLANS DATED _____

2010 REVISED STANDARD PLAN RSP A87A

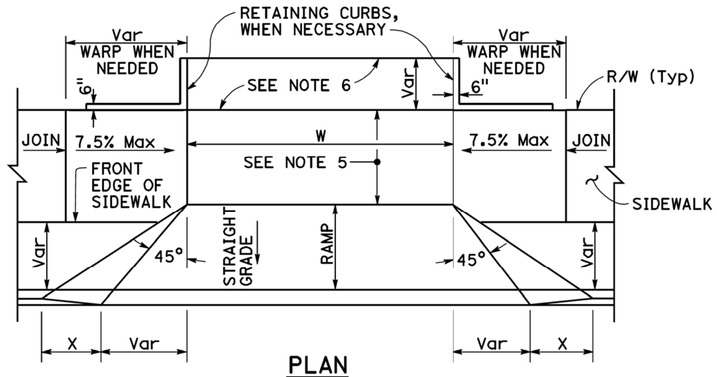

PLAN

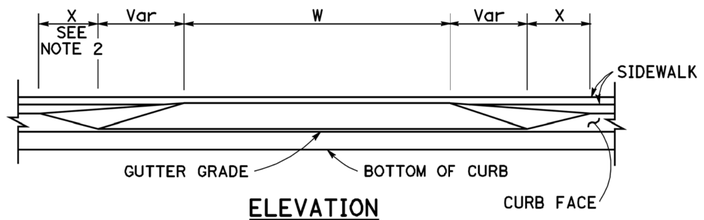

ELEVATION

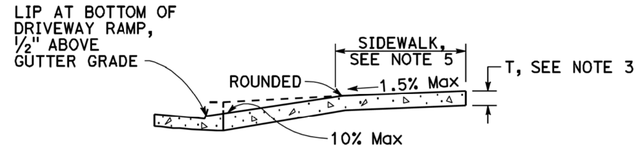

CASE A

Typical driveway, sidewalk not depressed

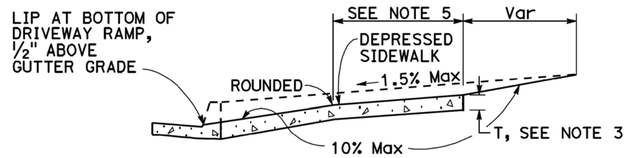

CASE B

Driveway with depressed sidewalk

SECTIONS

DRIVEWAYS

TABLE A

CURB TYPE	DIMENSIONS			
	"H1"	"H2"	"W1"	"W2"
A1-6	1'-2"	6"	7½"	1½"
A1-8	1'-4"	8"	8"	2"
A2-6	1'-0"	6"	2'-7½"	1½"
A2-8	1'-2"	8"	2'-8"	2"
A3-6	6"	5"	7¼"	1¼"
A3-8	8"	7"	7¾"	1¾"
B1-4	1'-0"	4"	7½"	2½"
B1-6	1'-2"	6"	9"	4"
B2-4	10"	4"	2'-7½"	2½"
B2-6	1'-0"	6"	2'-9"	4"
B3-4	4"	3"	7"	2"
B3-6	6"	5"	8½"	3½"
D-4	10"	4"	1'-6"	1'-1"
D-6	1'-0"	6"	2'-2"	1'-9"

CURB QUANTITIES

TYPE	CUBIC YARDS PER LINEAR FOOT
A1-6	0.02585
A1-8	0.03084
A2-6	0.05903
A2-8	0.06379
A3-6	0.01036
A3-8	0.01435
B1-4	0.02185
B1-6	0.02930
B2-4	0.05515
B2-6	0.06171
B3-4	0.00641
B3-6	0.01074
B4	0.05709
D-4	0.04083
D-6	0.06804
E	0.06661

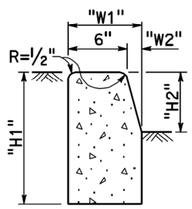

TYPE A1 CURBS

See Table A

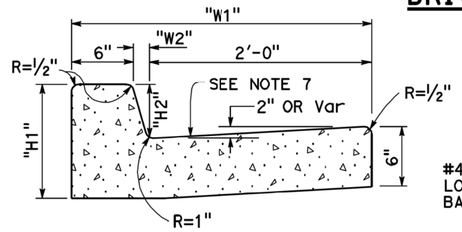

TYPE A2 CURBS

See Table A

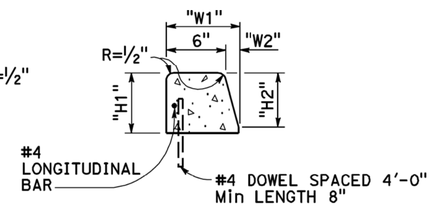

TYPE A3 CURBS

Superimposed on existing pavement
See Table A

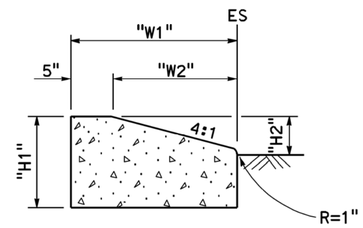

TYPE D CURBS

See Table A

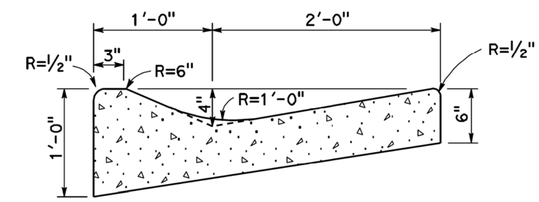

TYPE E CURB

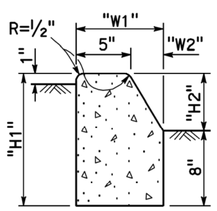

TYPE B1 CURBS

See Table A

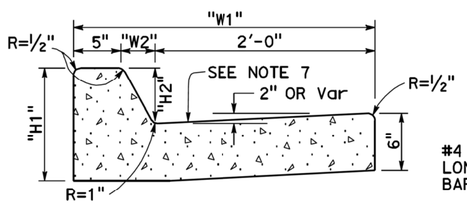

TYPE B2 CURBS

See Table A

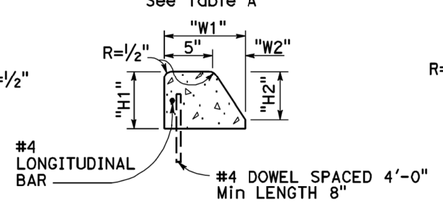

TYPE B3 CURBS

Superimposed on existing pavement
See Table A

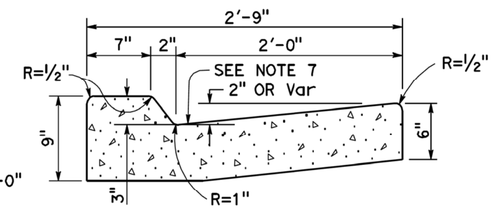

TYPE B4 CURBS

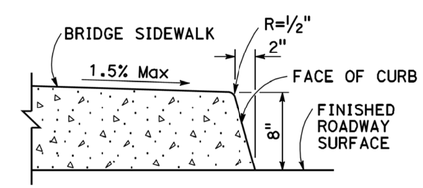

TYPE H CURB

On Bridges

CURBS

NOTES:

1. Case A driveway section typically applies.
2. X=3'-0" except for curb heights over 10" where 4:1 slopes shall be used on curb slope.
3. Sidewalk and ramp thickness "T" at driveway shall be 4" for residental and 6" for commercial.
4. Difference in slope of the driveway ramp and the slope of a line between the gutter and a point on the roadway 5'-0" from gutter line shall not exceed 15%. Reduce driveway ramp slope, not gutter slope, where required.
5. Minimum width of clear passageway for sidewalk shall be 4'-2".
6. Retaining curbs and acquisition of construction easement may be necessary for narrow sidewalks or curb heights in excess of 6".
7. Across the pedestrian route at curb ramp locations, the gutter pan slope shall not exceed 1" of depth for each 2'-0" of width.

STATE OF CALIFORNIA
DEPARTMENT OF TRANSPORTATION

CURBS AND DRIVEWAYS

NO SCALE

RSP A87A DATED JULY 19, 2013 SUPERSEDES STANDARD PLAN A87A
DATED MAY 20, 2011 - PAGE 119 OF THE STANDARD PLANS BOOK DATED 2010.

REVISED STANDARD PLAN RSP A87A

7-8-13

Dist	COUNTY	ROUTE	POST MILES TOTAL PROJECT	SHEET No.	TOTAL SHEETS
04	CC/Mrn	580	5.0/7.8, 0.0/3.3	418	579

REGISTERED CIVIL ENGINEER

January 15, 2016
PLANS APPROVAL DATE

REGISTERED PROFESSIONAL ENGINEER
Michael Janzen
No. 44788
Exp. 3-31-16
CIVIL
STATE OF CALIFORNIA

THE STATE OF CALIFORNIA OR ITS OFFICERS OR AGENTS SHALL NOT BE RESPONSIBLE FOR THE ACCURACY OR COMPLETENESS OF SCANNED COPIES OF THIS PLAN SHEET.

TO ACCOMPANY PLANS DATED _____

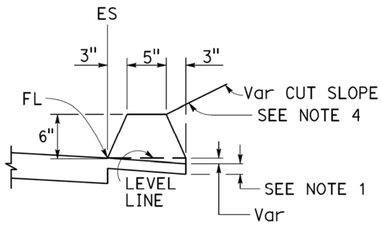

TYPE A
See Notes 3 and 5

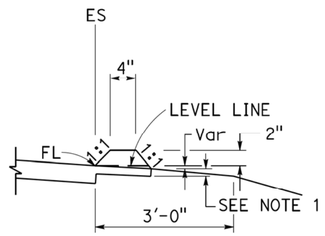

TYPE C

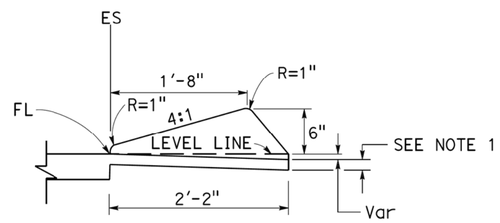

TYPE D

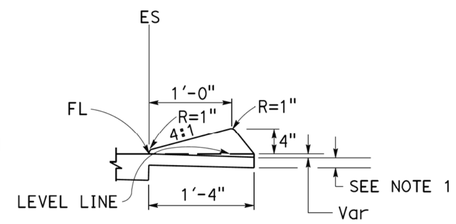

TYPE E

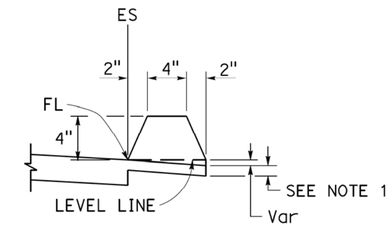

TYPE F
See Note 5

DIKES

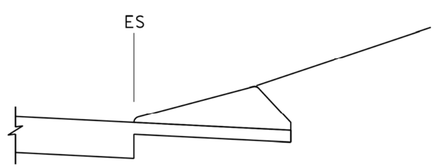

CASE C-1
Cut Slope

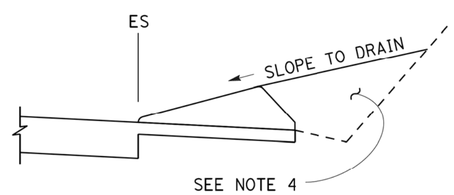

CASE C-2
Cut Slope

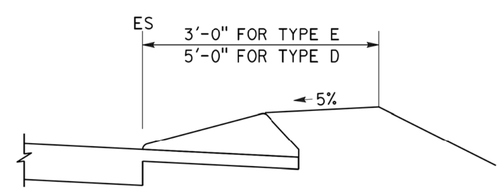

CASE F

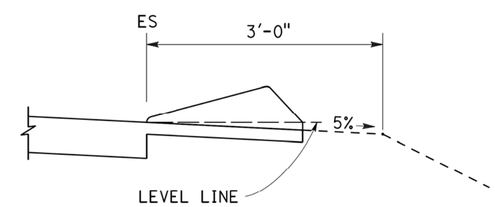

CASE R
See Note 2

TYPE D AND E BACKFILL DETAILS

NOTES:

1. For HMA shoulders only, extend top layer of HMA placed on the shoulder under dike with no joint at the ES. For projects with OGFC shoulders, do not extend OGFC under dike. See project plans for modified dike detail.
2. Case R applies to retrofit only projects where restrictive conditions do not provide enough width for Case F backfill.
3. Type A dike only to be used where restrictive slope conditions do not provide enough width to use Type D or Type E dike.
4. Fill and compact with excavated material to top of dike.
5. Use Type A or F dike, where dike is required with guardrail installations. See Revised Standard Plan RSP A77N4 for dike positioning details. See Revised Standard Plan RSP A77N3 for hinge point offsets with guardrail.

DIKE QUANTITIES

TYPE	CUBIC YARDS PER LINEAR FOOT
A	0.0135
C	0.0038
D	0.0293
E	0.0130
F	0.0066

Quantities based on 5% cross slope.

STATE OF CALIFORNIA
DEPARTMENT OF TRANSPORTATION

HOT MIX ASPHALT DIKES

NO SCALE

RSP A87B DATED JANUARY 15, 2016 SUPERSEDES RSP A87B DATED JULY 19, 2013 AND STANDARD PLAN A87B DATED MAY 20, 2011 - PAGE 120 OF THE STANDARD PLANS BOOK DATED 2010.

REVISED STANDARD PLAN RSP A87B

2010 REVISED STANDARD PLAN RSP A87B

11-17-15

Dist	COUNTY	ROUTE	POST MILES TOTAL PROJECT	SHEET No.	TOTAL SHEETS
04	CC/Mrn	580	5.0/7.8, 0.0/3.3	419	579

REGISTERED CIVIL ENGINEER

July 15, 2016

PLANS APPROVAL DATE

REGISTERED PROFESSIONAL ENGINEER Hector David Cordova No. C41957 Exp. 3-31-18 CIVIL STATE OF CALIFORNIA

THE STATE OF CALIFORNIA OR ITS OFFICERS OR AGENTS SHALL NOT BE RESPONSIBLE FOR THE ACCURACY OR COMPLETENESS OF SCANNED COPIES OF THIS PLAN SHEET.

TO ACCOMPANY PLANS DATED _____

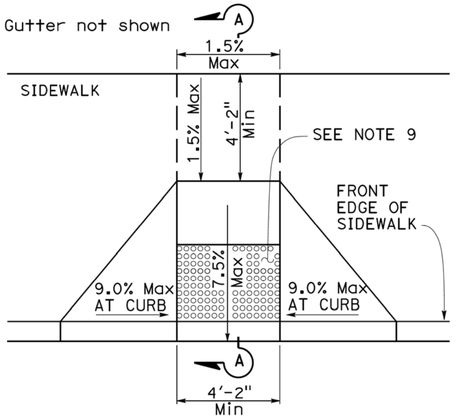

CASE A

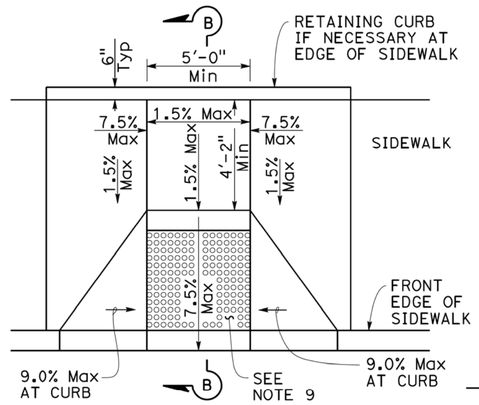

CASE B

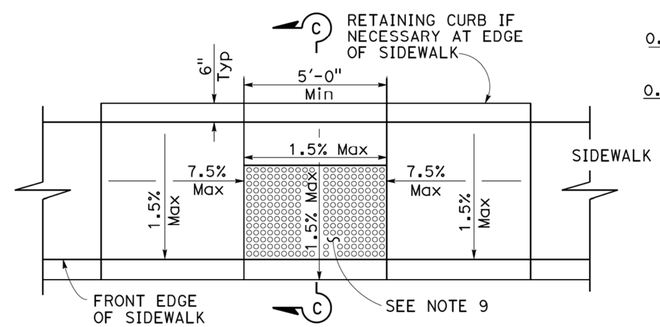

CASE C

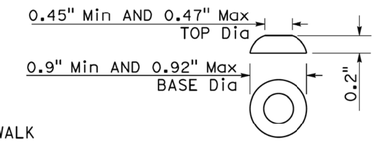

RAISED TRUNCATED DOME

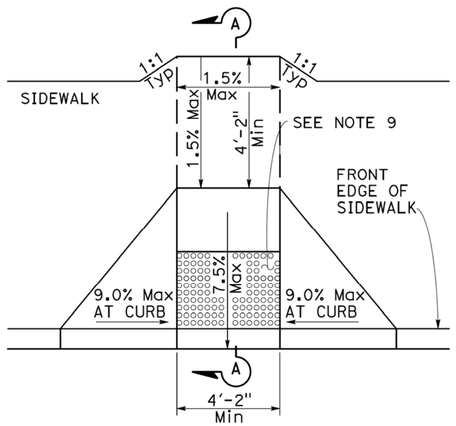

CASE D

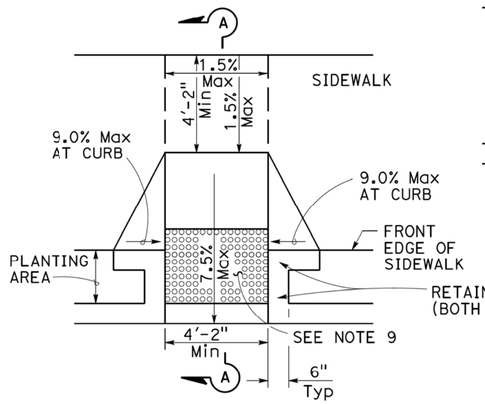

CASE E

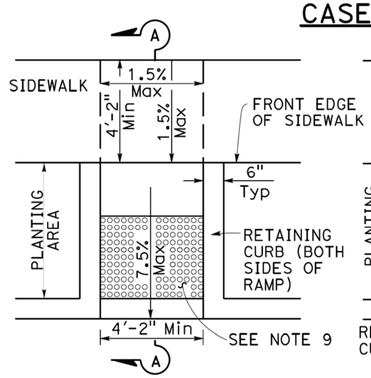

CASE F

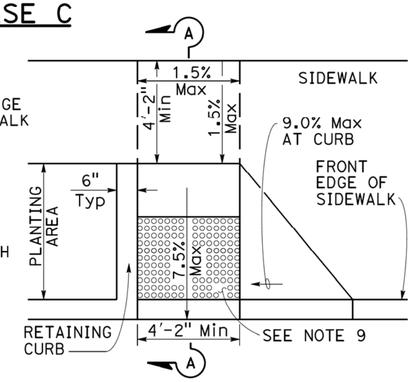

CASE G

See Note 4

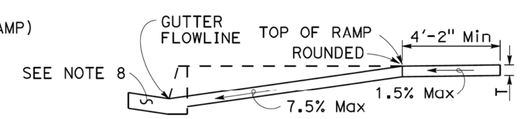

SECTION A-A

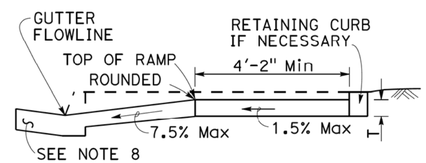

SECTION B-B

Depress entire sidewalk as required

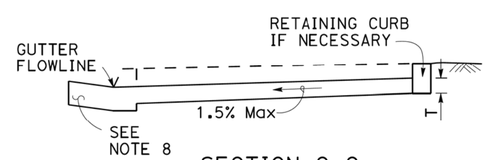

SECTION C-C

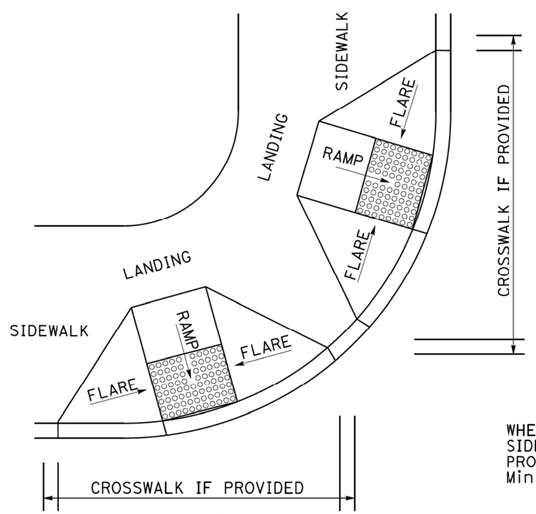

DETAIL A

TYPICAL TWO-RAMP CORNER INSTALLATION

See Note 1

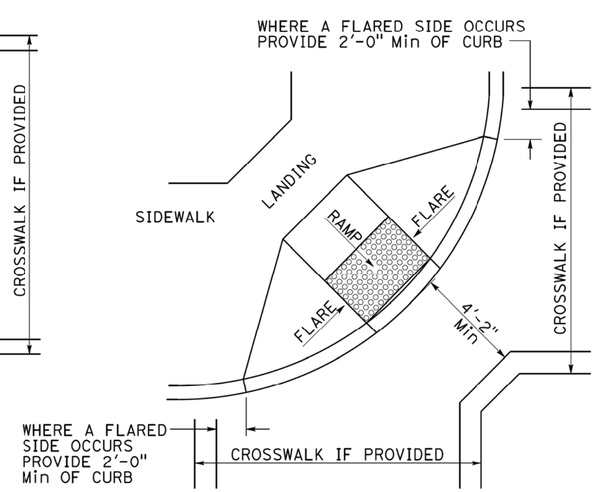

DETAIL B

TYPICAL ONE-RAMP CORNER INSTALLATION

See Notes 1 and 3

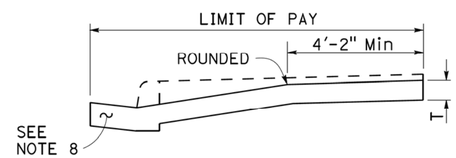

RETROFIT PAY LIMITS

Existing curb and sidewalk

NOTES:

1. As site conditions dictate, Case A through Case G curb ramps may be used for corner installations similar to those shown in Detail A and Detail B. The case of curb ramps used in Detail A do not have to be the same. Case A through Case G curb ramps also may be used at mid block locations, as site conditions dictate.
2. If distance from curb to back of sidewalk is too short to accommodate ramp and 4'-2" platform (landing) as shown in Case A, the sidewalk may be depressed longitudinally as in Case B, or C or may be widened as in Case D.
3. When ramp is located in center of curb return, crosswalk configuration must be similar to that shown for Detail B.
4. As site conditions dictate, the retaining curb side and the flared side of the Case G ramp shall be constructed in reversed position.
5. If located on a curve, the sides of the ramp need not be parallel, but the minimum width of the ramp shall be 4'-2".
6. Side slope of ramp flares vary uniformly from a maximum of 9.0% at curb to conform with longitudinal sidewalk slope adjacent to top of the ramp, except in Case C and Case F.
7. The adjacent surfaces at transitions at curb ramps to walks, gutters, and streets shall be at the same level.
8. Counter slopes of adjoining gutters and road surfaces immediately adjacent to and within 24 inches of the curb ramp shall not be steeper than 1:20 (5.0%). Gutter pan slope shall not exceed 1" of depth for each 2'-0" of width.
9. Curb ramps shall have a detectable warning surface that extends the full width and 3'-0" depth of the ramp. A 4'-0" wide detectable warning surface may be used on a 4'-2" wide curb ramp. Detectable Warning Surfaces shall conform to the requirements in the Standard Specifications.
10. Sidewalk and ramp thickness, "T", shall be 3½" minimum.
11. Utility pull boxes, manholes, vaults and all other utility facilities within the boundaries of the curb ramp will be relocated or adjusted to grade by the owner prior to, or in conjunction with, curb ramp construction.
12. Detectable warning surface may have to be cut to allow removal of utility covers while maintaining full detectable warning width and depth.

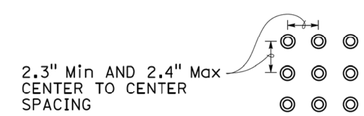

RAISED TRUNCATED DOME PATTERN (IN-LINE)

DETECTABLE WARNING SURFACE

See Note 9

STATE OF CALIFORNIA
DEPARTMENT OF TRANSPORTATION

CURB RAMP DETAILS

NO SCALE

RSP A88A DATED JULY 15, 2016 SUPERSEDES RSP A88A DATED JULY 3, 2015, RSP A88A DATED MARCH 21, 2014 AND RSP A88A DATED JULY 19, 2013 AND STANDARD PLAN A88A DATED MAY 20, 2011 - PAGE 121 OF THE STANDARD PLANS BOOK DATED 2010.

REVISED STANDARD PLAN RSP A88A

2010 REVISED STANDARD PLAN RSP A88A

3-30-16

Dist	COUNTY	ROUTE	POST MILES TOTAL PROJECT	SHEET No.	TOTAL SHEETS
04	CC/Mrn	580	5.0/7.8, 0.0/3.3	420	579

REGISTERED CIVIL ENGINEER

July 15, 2016
PLANS APPROVAL DATE

REGISTERED PROFESSIONAL ENGINEER Hector David Cordova No. C41957 Exp. 3-31-18 CIVIL STATE OF CALIFORNIA

THE STATE OF CALIFORNIA OR ITS OFFICERS OR AGENTS SHALL NOT BE RESPONSIBLE FOR THE ACCURACY OR COMPLETENESS OF SCANNED COPIES OF THIS PLAN SHEET.

TO ACCOMPANY PLANS DATED _____

Gutter not shown

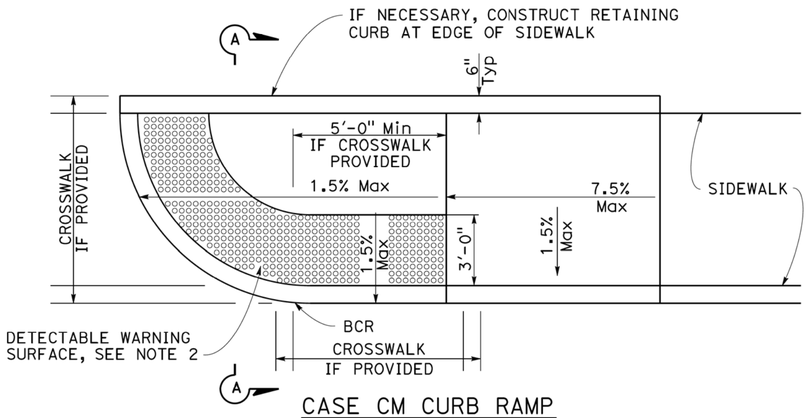

CASE CM CURB RAMP

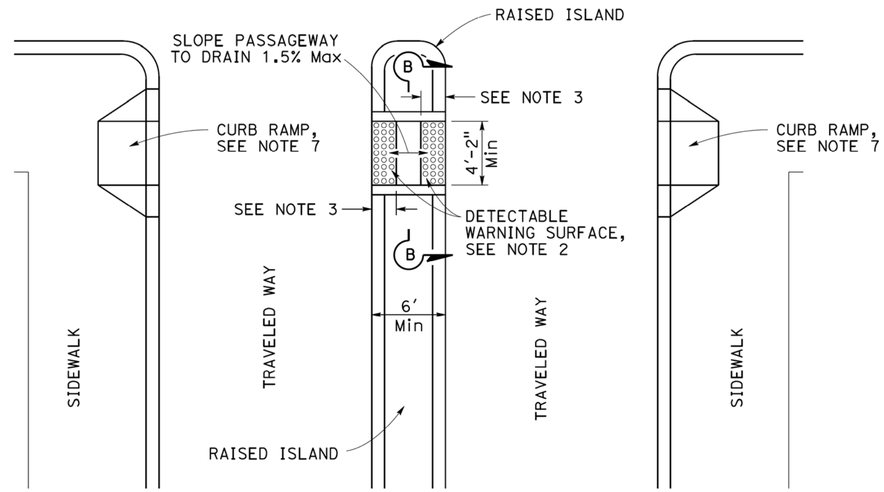

TYPE A PASSAGEWAY

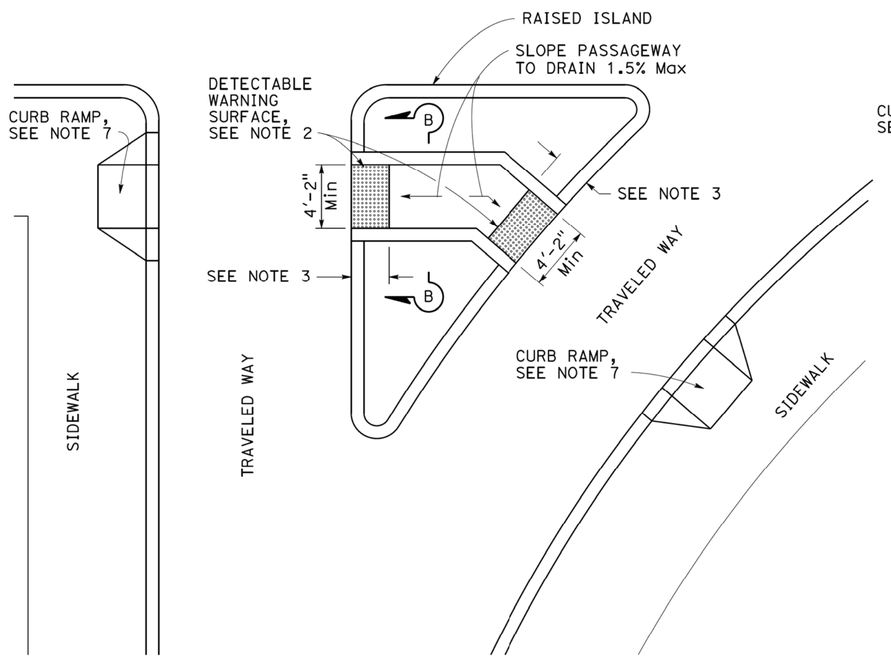

TYPE B PASSAGEWAY

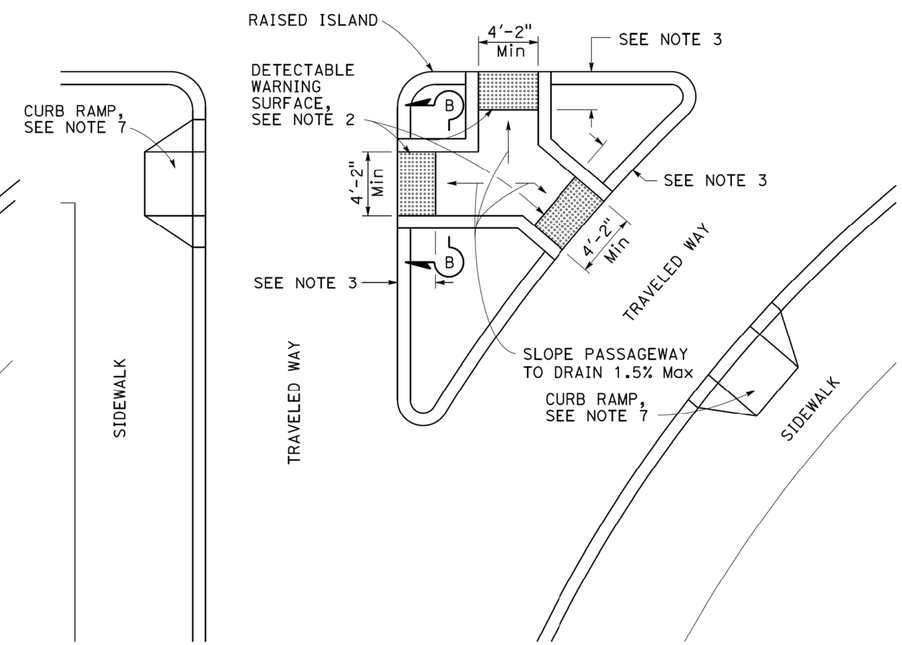

TYPE C PASSAGEWAY

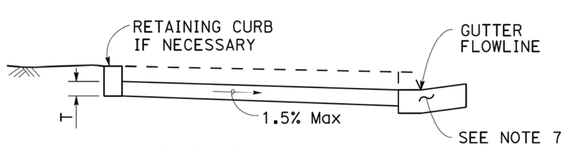

SECTION A-A

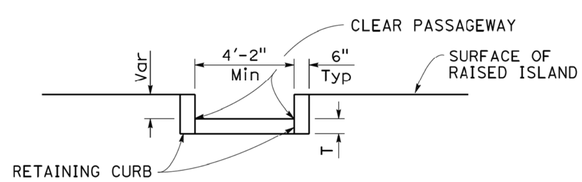

SECTION B-B

NOTES:

1. Sidewalk, ramp and passageway thickness, "T", shall be 3½" minimum.
2. For details of detectable warning surfaces, see Revised Standard Plan RSP A88A.
3. Where an island passageway length is greater than or equal to 6'-0", but less than 8'-0", each detectable warning surface shall extend the full width and 2'-0" depth of the passageway length. Where an island passageway length is greater than or equal to 8'-0", each detectable warning surface shall extend the full width and 3'-0" depth of the passageway length. A 4'-0" wide detectable warning surface may be used on a 4'-2" wide island passageway.
4. The adjacent surfaces at transitions at curb ramps to walks, gutters, and streets shall be at the same level.
5. Utility pull boxes, manholes, vaults and all other utility facilities within the boundaries of the curb ramp will be relocated or adjusted to grade by the owner prior to, or in conjunction with, curb ramp construction.
6. Detectable warning surface may have to be cut to allow removal of utility covers while maintaining full detectable warning width and depth.
7. For additional curb ramp details, see Revised Standard Plan RSP A88A.

STATE OF CALIFORNIA
DEPARTMENT OF TRANSPORTATION

CURB RAMP AND ISLAND PASSAGEWAY DETAILS

NO SCALE

RSP A88B DATED JULY 15, 2016 SUPERSEDES RSP A88B DATED JULY 3, 2015, RSP A88B DATED MARCH 21, 2014 AND RSP A88B DATED JULY 19, 2013 AND STANDARD PLAN A88B DATED MAY 20, 2011 - PAGE 122 OF THE STANDARD PLANS BOOK DATED 2010.

REVISED STANDARD PLAN RSP A88B

2010 REVISED STANDARD PLAN RSP A88B

3-29-16

Dist	COUNTY	ROUTE	POST MILES TOTAL PROJECT	SHEET No.	TOTAL SHEETS
04	CC/Mrn	580	5.0/7.8, 0.0/3.3	421	579

REGISTERED CIVIL ENGINEER

October 30, 2015
PLANS APPROVAL DATE

REGISTERED PROFESSIONAL ENGINEER Srikanth N. Balasubramanian No. C56426 Exp. 6-30-17 CIVIL STATE OF CALIFORNIA

THE STATE OF CALIFORNIA OR ITS OFFICERS OR AGENTS SHALL NOT BE RESPONSIBLE FOR THE ACCURACY OR COMPLETENESS OF SCANNED COPIES OF THIS PLAN SHEET.

TO ACCOMPANY PLANS DATED _____

ABBREVIATIONS:

TE TAPERED EDGE

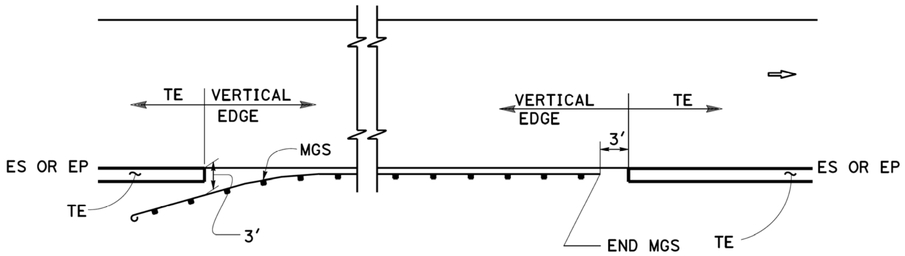

MGS

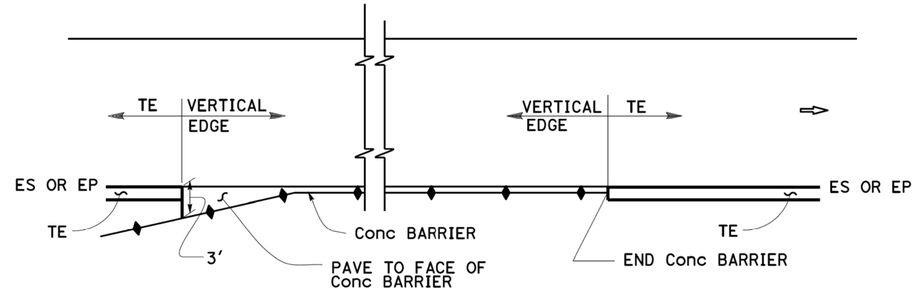

CONCRETE BARRIER

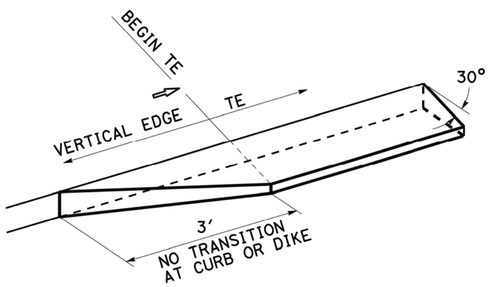

TRANSITION DETAIL FOR CONCRETE ONLY

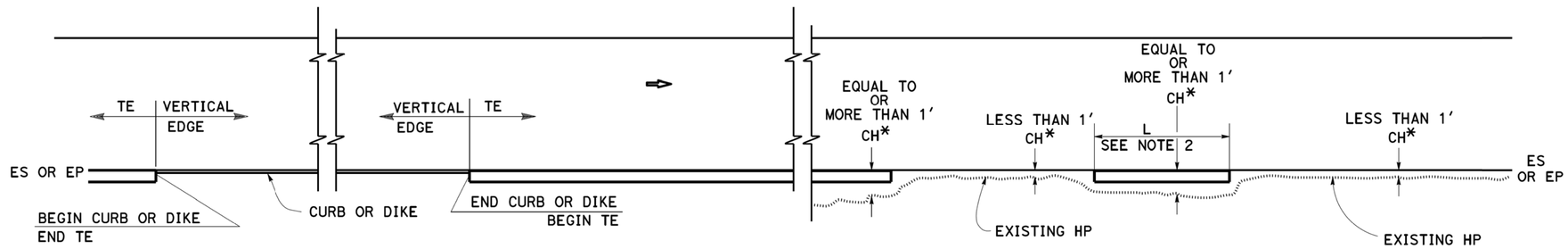

CURB OR DIKE

NARROW SIDE SLOPE

* CH = Distance from ES or EP to existing HP.

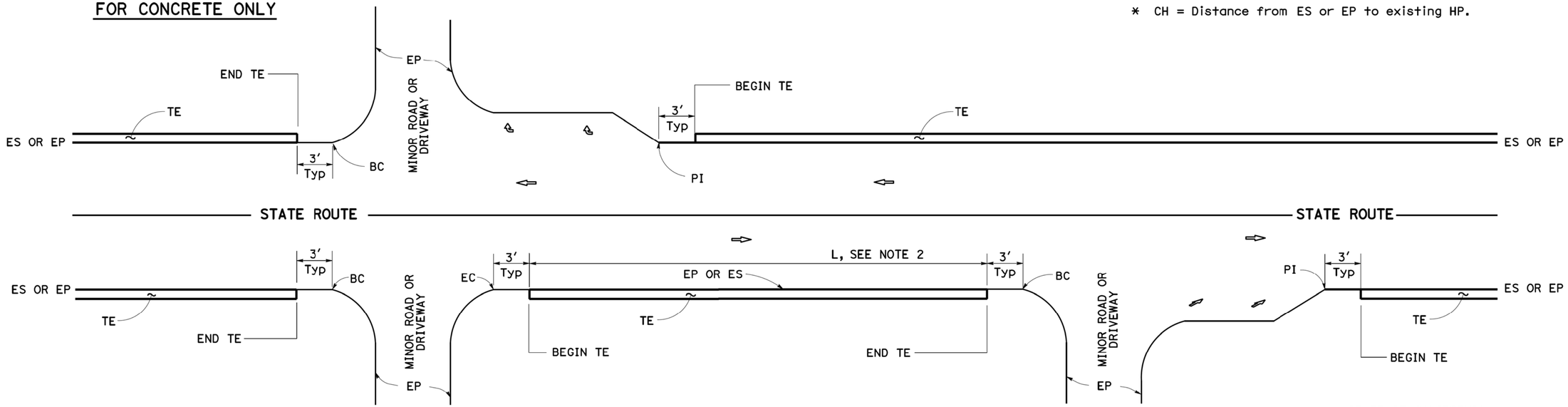

INTERTECTION

MINOR ROADWAY OR DRIVEWAY

DRIVEWAY AND INTERSECTION

STATE OF CALIFORNIA
DEPARTMENT OF TRANSPORTATION

PAVEMENT EDGE TREATMENTS

NO SCALE

NOTES:

1. For details not shown, see Revised Standard Plans RSP P75 and RSP P76.
2. Tapered edge is optional when L is less than 30′.

RSP P74 DATED OCTOBER 30, 2015 SUPERSEDES RSP P74 DATED NOVEMBER 15, 2013 AND RSP P74 DATED JANUARY 20, 2012 THAT SUPPLEMENTS THE STANDARD PLANS BOOK DATED 2010.

REVISED STANDARD PLAN RSP P74

2010 REVISED STANDARD PLAN RSP P74

10-13-15

Dist	COUNTY	ROUTE	POST MILES TOTAL PROJECT	SHEET No.	TOTAL SHEETS
04	CC/Mrn	580	5.0/7.8, 0.0/3.3	422	579

REGISTERED CIVIL ENGINEER

October 30, 2015
PLANS APPROVAL DATE

REGISTERED PROFESSIONAL ENGINEER Srikanth N. Balasubramanian No. C56426 Exp. 6-30-17 CIVIL STATE OF CALIFORNIA

THE STATE OF CALIFORNIA OR ITS OFFICERS OR AGENTS SHALL NOT BE RESPONSIBLE FOR THE ACCURACY OR COMPLETENESS OF SCANNED COPIES OF THIS PLAN SHEET.

TO ACCOMPANY PLANS DATED _____

LEGEND:

- HMA OVERLAY
- HMA OR CONCRETE OVERLAY
- CONCRETE OVERLAY

ABBREVIATIONS:

TE TAPERED EDGE
TT TOTAL THICKNESS OF TE

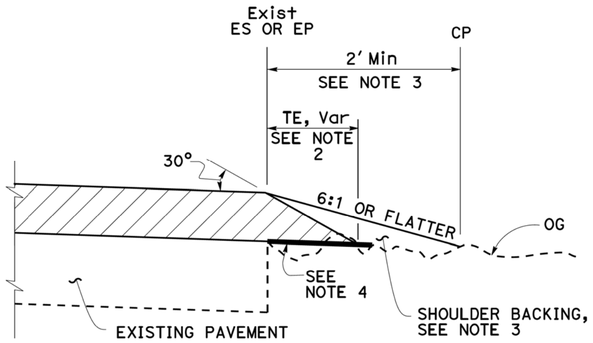

CASE A
Tapered Edge

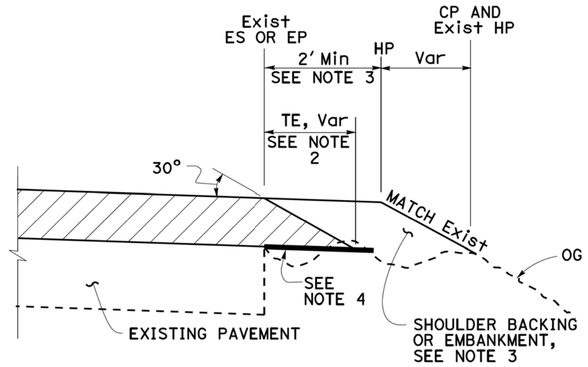

CASE B
Tapered Edge

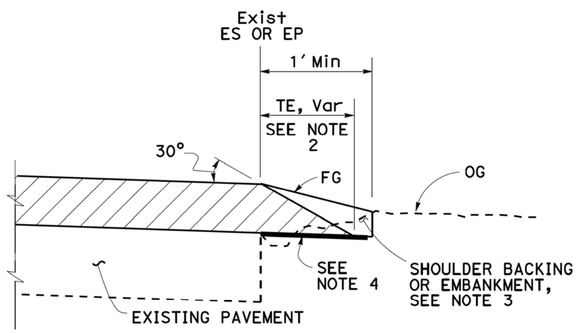

CASE C
Tapered Edge

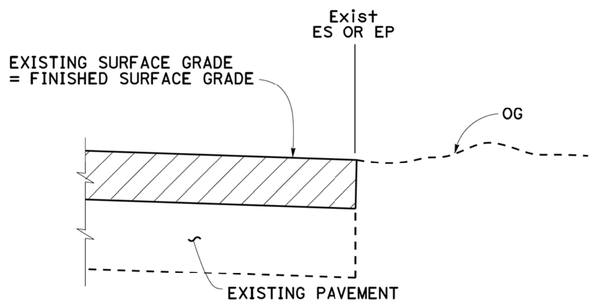

CASE D
Vertical Edge

TABLE A
EDGE TREATMENT FOR VARIOUS OVERLAY THICKNESS AND CONDITIONS

	OVERLAY THICKNESS	
FIELD CONDITION	LESS THAN 0.15'	0.15' OR MORE
Exist SLOPE 6:1 OR FLATTER	CASE E	CASE A
Exist SLOPE 3:1 TO 6:1	CASE E	CASE B
Exist SLOPE STEEPER THAN 3:1	CASE F	CASE F
CUT SECTION (REPLACE, COLD PLANE, MILL PAVEMENT)	CASE D	CASE C

ADDITIONAL HMA OR CONCRETE QUANTITIES FOR TE/SIDE/MILE

TYPICAL CROSS SECTION	TT	TOTAL ADDITIONAL MATERIAL FOR TE/SIDE/MILE		
		HMA (TON)	CONCRETE (CY)*	CONCRETE (CY)**
TT	0.15'	7.7	NA	NA
	0.20'	13.7	NA	NA
	0.30'	30.9	NA	NA
	0.40'	54.9	NA	NA
	0.45'	69.4	NA	NA
TT, 0.43'	0.50'	84.2	NA	NA
	0.60'	113.9	NA	NA
	0.70'	143.6	70.9	94.2
	0.80'	173.3	85.6	112.2
	0.90'	203.0	100.3	130.2
	1.00'	232.7	114.9	148.2
	1.10'	262.4	129.6	166.2
	1.20'	292.1	144.3	184.2

* For Detail "A"
** For Optional Detail "A"

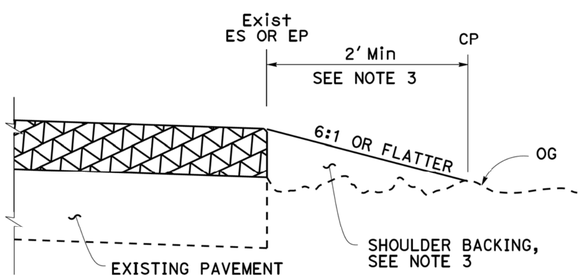

CASE E
Vertical Edge

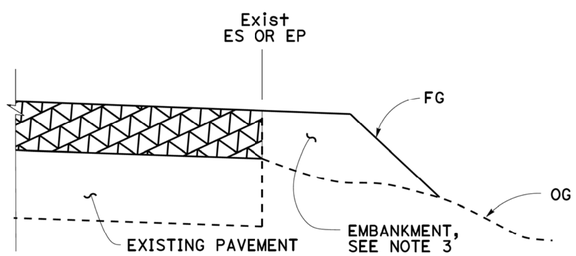

CASE F
Vertical Edge
* See Table A and Revised Std Plan RSP P74

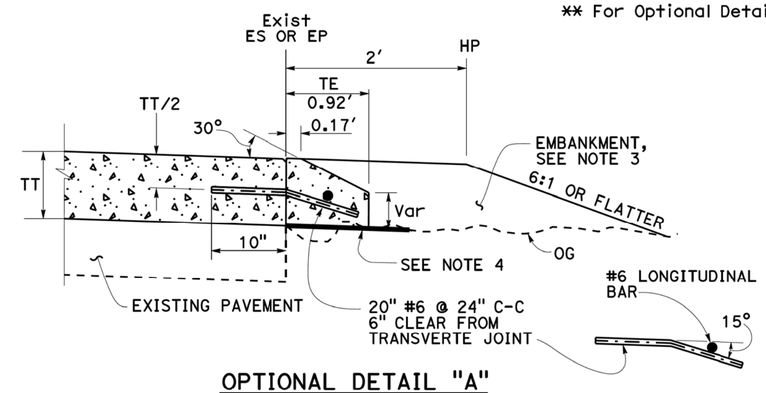

OPTIONAL DETAIL "A"
For concrete overlay
See Note 5

NOTES:

1. For limits of tapered edge and vertical edge treatments, see Revised Standard Plan RSP P74.
2. Details shown for HMA overlay thickness less than 0.43'. See Detail "A" for HMA overlay thickness more than 0.43' or concrete overlay.
3. For locations and limits of shoulder backing or embankment see project plans.
4. Grade existing ground to place tapered edge. 1' minimum width
5. Tapered edge transverse joint must match overlay transverse joint. End of #6 longitudinal bar must be 2" ±½" clear from transverse joint.
6. Tapered edge is not needed in the area of MGS, barrier, right turn lane and acceleration lane. See Revised Standard Plan RSP P74.

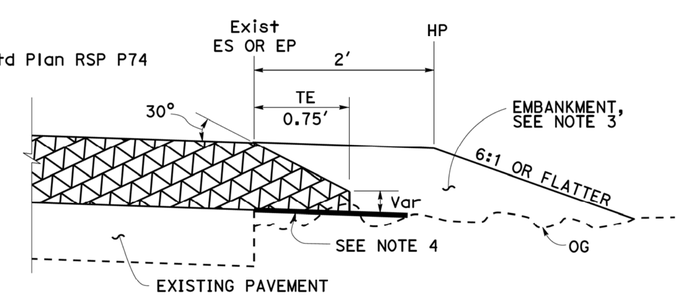

DETAIL "A"
For HMA overlay thickness more than 0.43' or concrete overlay

STATE OF CALIFORNIA
DEPARTMENT OF TRANSPORTATION

PAVEMENT EDGE TREATMENTS-OVERLAYS

NO SCALE

RSP P75 DATED OCTOBER 30, 2015 SUPERSEDES RSP P75 DATED NOVEMBER 15, 2013 AND RSP P75 DATED JANUARY 20, 2012 THAT SUPPLEMENTS THE STANDARD PLANS BOOK DATED 2010.

REVISED STANDARD PLAN RSP P75

2010 REVISED STANDARD PLAN RSP P75

7-2-15

Dist	COUNTY	ROUTE	POST MILES TOTAL PROJECT	SHEET No.	TOTAL SHEETS
04	CC/Mrn	580	5.0/7.8, 0.0/3.3	423	579

REGISTERED CIVIL ENGINEER

October 30, 2015
PLANS APPROVAL DATE

REGISTERED PROFESSIONAL ENGINEER Srikanth N. Balasubramanian No. C56426 Exp. 6-30-17 CIVIL STATE OF CALIFORNIA

THE STATE OF CALIFORNIA OR ITS OFFICERS OR AGENTS SHALL NOT BE RESPONSIBLE FOR THE ACCURACY OR COMPLETENESS OF SCANNED COPIES OF THIS PLAN SHEET.

TO ACCOMPANY PLANS DATED _____

LEGEND:

- HMA PAVEMENT
- HMA OR CONCRETE PAVEMENT
- CONCRETE PAVEMENT

ABBREVIATIONS:

TE TAPERED EDGE
TT TOTAL THICKNESS OF TE
HW HINGE WIDTH, DISTANCE FROM ES OR EP TO HP

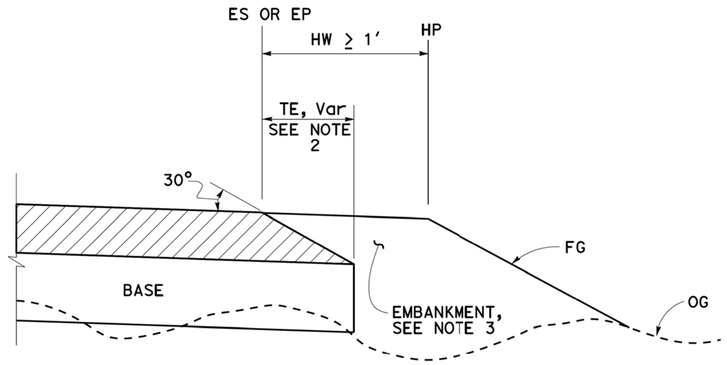

CASE K
Tapered Edge - Fill Section, HW ≥ 1′

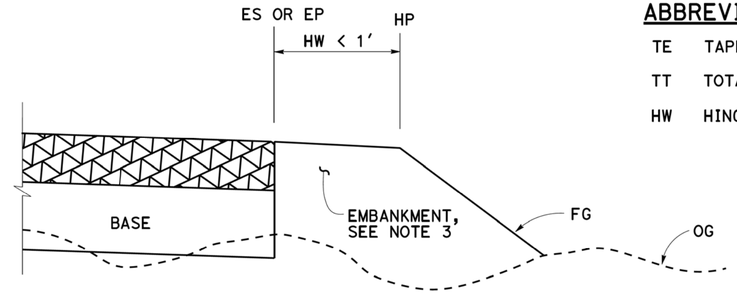

CASE L
Vertical Edge - Fill Section, HW < 1′

FILL SECTION

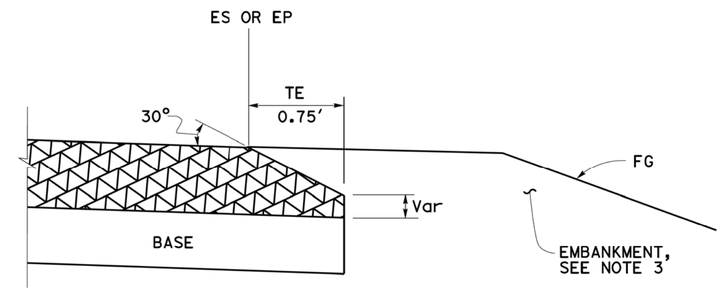

DETAIL "B"
For HMA pavement thickness more than 0.43′ or concrete pavement

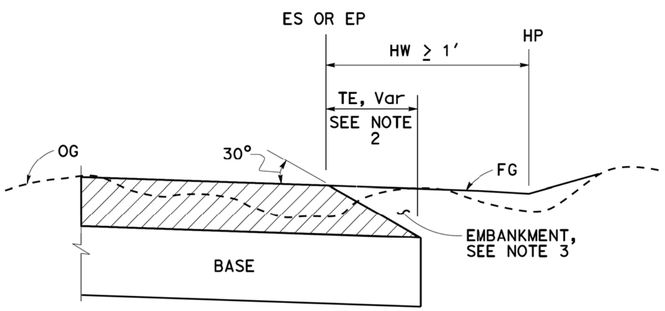

CASE M
Tapered Edge - Cut Section, HW ≥ 1′

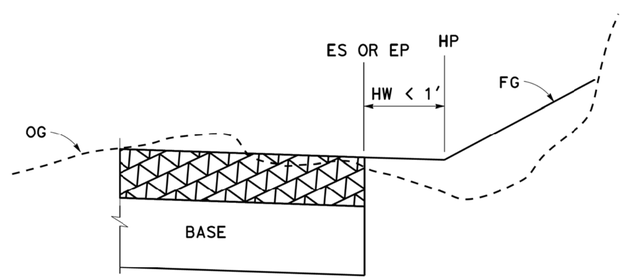

CASE N
Vertical Edge - Cut Section, HW < 1′

CUT SECTION

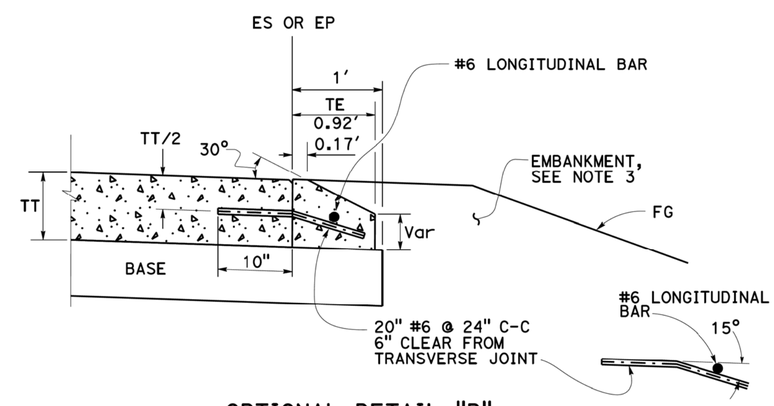

OPTIONAL DETAIL "B"
For concrete pavement
See Note 4

NOTES:

1. For limits of tapered edge and vertical edge treatments, see Revised Standard Plan RSP P74
2. Details shown for HMA pavement thickness less than 0.43′. See Detail "B" for HMA pavement thickness more than 0.43′ or concrete pavement.
3. For locations and limits of embankment see project plans.
4. Tapered edge transverse joint must match pavement transverse joint. End of #6 longitudinal bar must be 2" ±½" clear from transverse joint.
5. Tapered edge is not needed in the area of MGS, barrier, right turn lane and acceleration lane. See Revised Standard Plan RSP P74.

STATE OF CALIFORNIA
DEPARTMENT OF TRANSPORTATION

PAVEMENT EDGE TREATMENTS-NEW CONSTRUCTION

NO SCALE

RSP P76 DATED OCTOBER 30, 2015 SUPERSEDES RSP P76 DATED NOVEMBER 15, 2013 AND RSP P76 DATED JANUARY 20, 2012 THAT SUPPLEMENTS THE STANDARD PLANS BOOK DATED 2010.

REVISED STANDARD PLAN RSP P76

2010 REVISED STANDARD PLAN RSP P76

7-2-15

Dist	COUNTY	ROUTE	POST MILES TOTAL PROJECT	SHEET No.	TOTAL SHEETS
04	CC/Mrn	580	5.0/7.8, 0.0/3.3	424	579

REGISTERED CIVIL ENGINEER

July 15, 2016
PLANS APPROVAL DATE

REGISTERED PROFESSIONAL ENGINEER Carl M. Duan No. C59976 Exp. 6-30-18 CIVIL STATE OF CALIFORNIA

THE STATE OF CALIFORNIA OR ITS OFFICERS OR AGENTS SHALL NOT BE RESPONSIBLE FOR THE ACCURACY OR COMPLETENESS OF SCANNED COPIES OF THIS PLAN SHEET.

TO ACCOMPANY PLANS DATED _____

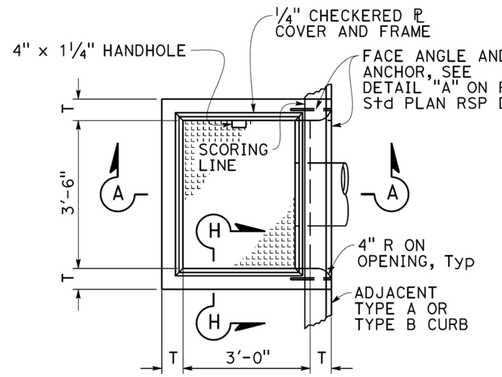

PLAN
TYPE OS

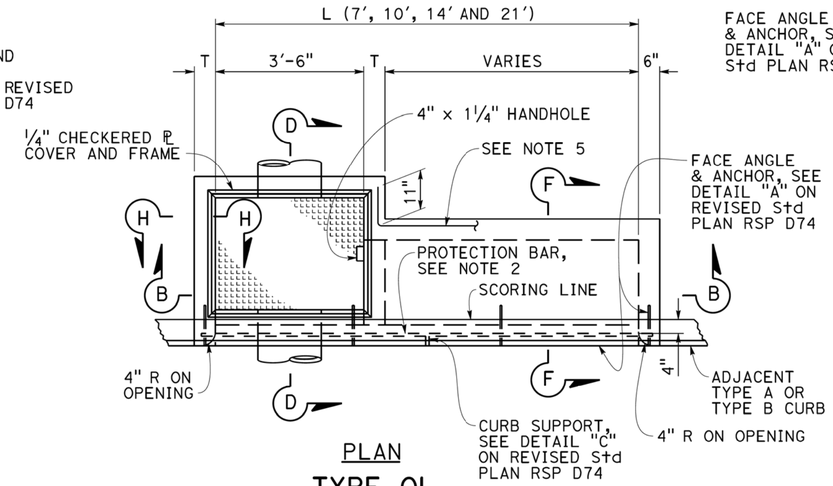

PLAN
TYPE OL

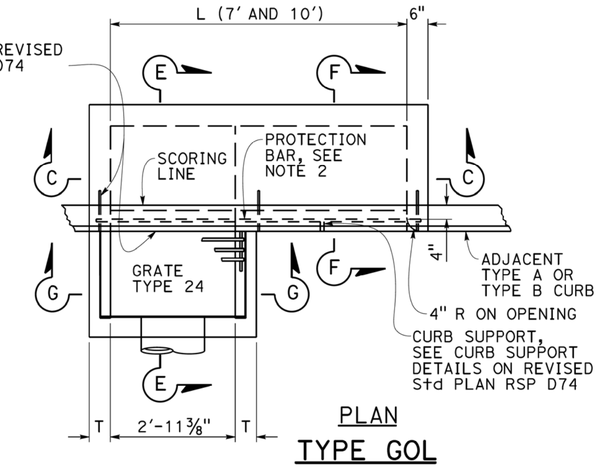

PLAN
TYPE GOL

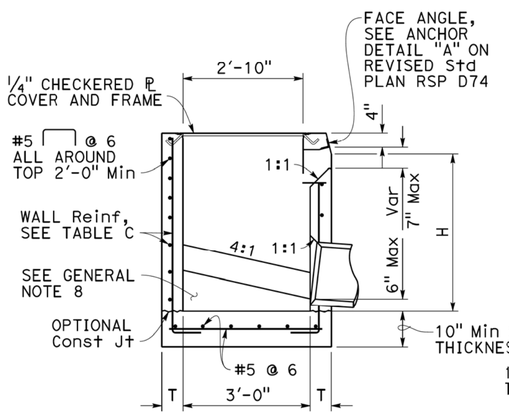

SECTION A-A

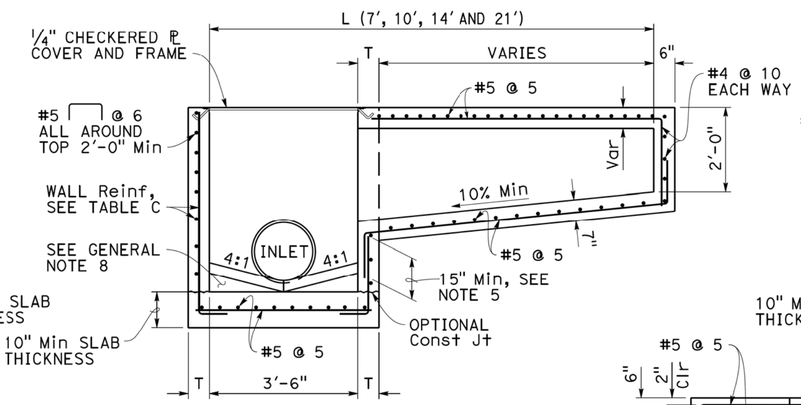

SECTION B-B

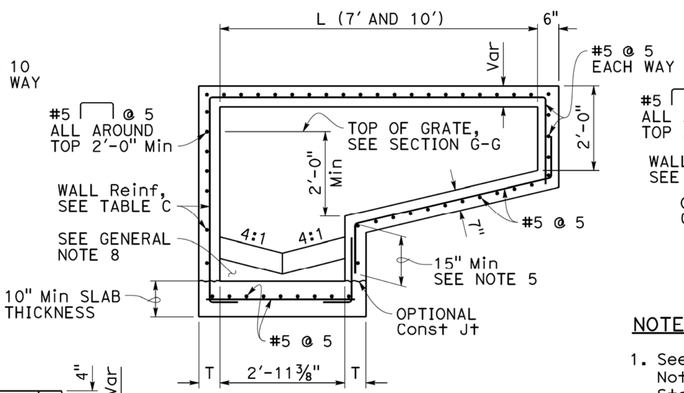

SECTION C-C

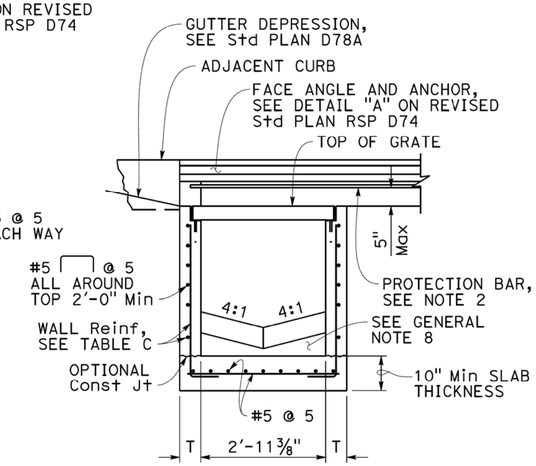

SECTION G-G

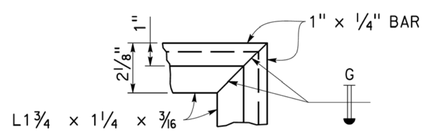

COVER FRAME
TYPICAL EACH CORNER
(CHECKERED ℙ COVER NOT SHOWN)

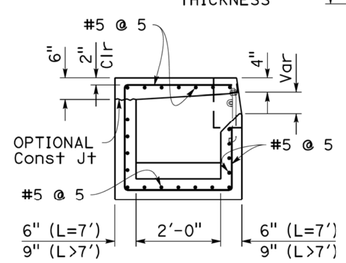

SECTION F-F
(SEE NOTE 5)

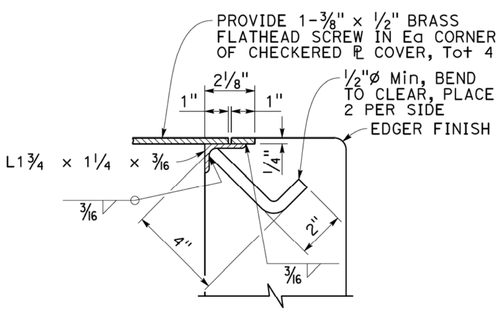

SECTION H-H

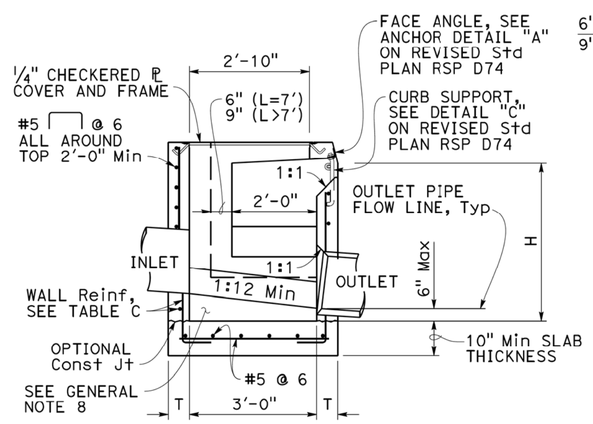

SECTION D-D

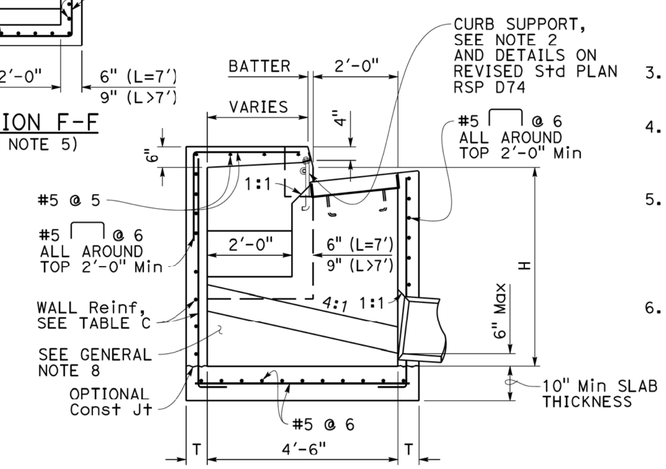

SECTION E-E

NOTES:

1. See Revised Standard Plan RSP D72F for General Notes and additional details. See Revised Standard Plan RSP D72G for tables, wall thickness "T" and quantities.
2. Where shown on the project plans, place a ¾"ø plain round protection bar horizontally across the length of the opening and bend back 4" into the inlet wall on each side.
3. Complete joint penetration butt welds may be substituted for the fillet welds on all anchors.
4. Standard square, hexagon, round or equivalent headed anchors may be substituted for the right angle hooks on the anchors shown on this plan.
5. Extend all horizontal bars from inlet extensions into adjacent concrete elements of main inlet box a minimum of 15". Where shown, bend horizontal bars into box. If necessary rotate bars to maintain 2" clear coverage.
6. Height of curb opening will vary with the type of curb and the depth of the local depression.

STATE OF CALIFORNIA
DEPARTMENT OF TRANSPORTATION

CIP DRAINAGE INLETS TYPES OS, OL AND GOL

NO SCALE

RSP D72A DATED JULY 15, 2016 SUPPLEMENTS THE STANDARD PLANS BOOK DATED 2010.

REVISED STANDARD PLAN RSP D72A

2010 REVISED STANDARD PLAN RSP D72A

6-28-16

Dist	COUNTY	ROUTE	POST MILES TOTAL PROJECT	SHEET No.	TOTAL SHEETS
04	CC/Mrn	580	5.0/7.8, 0.0/3.3	425	579

REGISTERED CIVIL ENGINEER

July 15, 2016
PLANS APPROVAL DATE

REGISTERED PROFESSIONAL ENGINEER Carl M. Duan No. C59976 Exp. 6-30-18 CIVIL STATE OF CALIFORNIA

THE STATE OF CALIFORNIA OR ITS OFFICERS OR AGENTS SHALL NOT BE RESPONSIBLE FOR THE ACCURACY OR COMPLETENESS OF SCANNED COPIES OF THIS PLAN SHEET.

TO ACCOMPANY PLANS DATED _____

NOTE:

1. For notes and Table 2, See Revised Standard Plan RSP D72C.

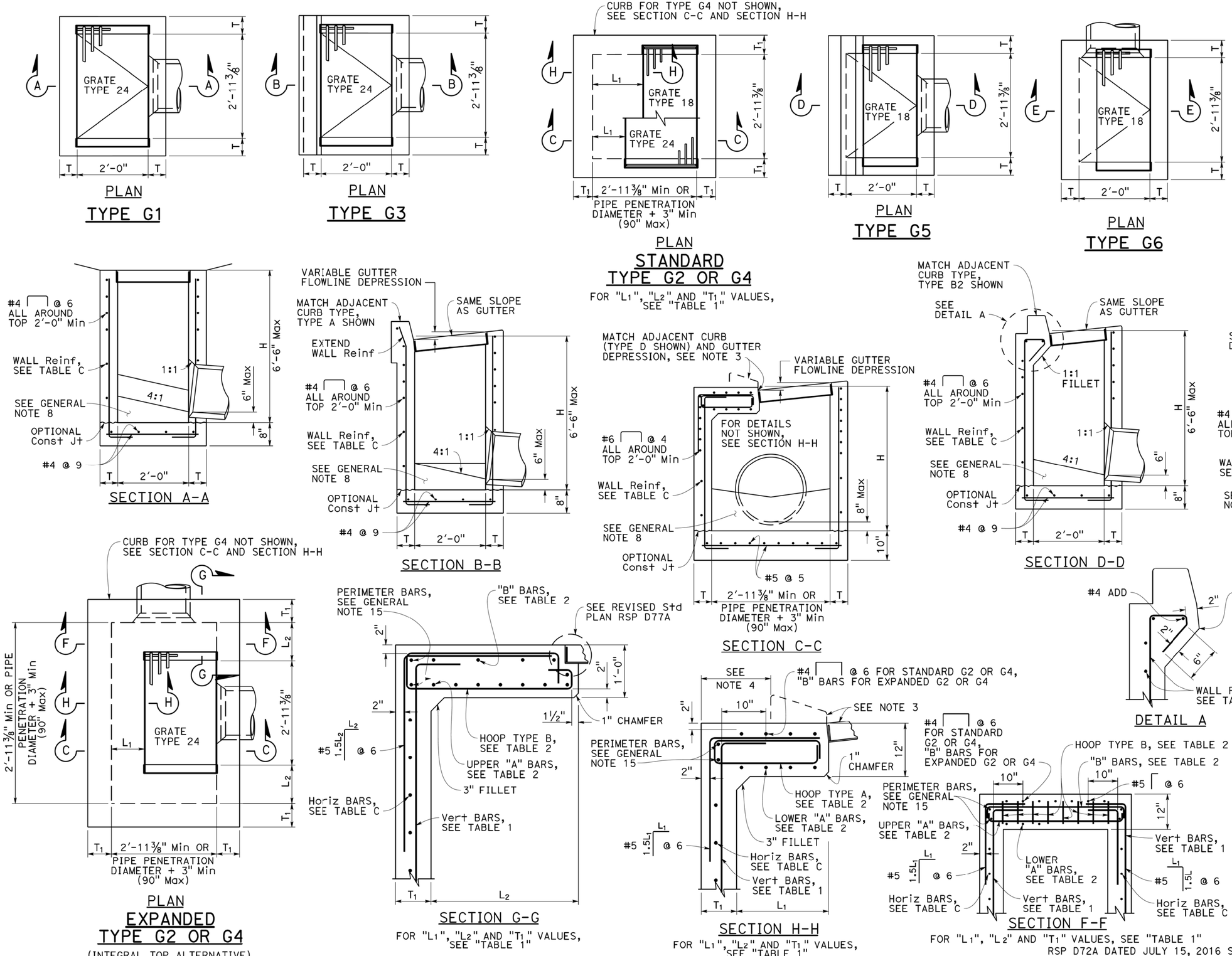

TABLE 1		
	T_1	Vert BARS
L_1 AND L_2 < 2'-10"	9"	#4 @ 12
L_1 OR L_2 > 2'-10"	12"	#5 @ 12

STATE OF CALIFORNIA
DEPARTMENT OF TRANSPORTATION

CIP DRAINAGE INLETS TYPES G1, G2, G3, G4, G5 AND G6

NO SCALE

RSP D72A DATED JULY 15, 2016 SUPPLEMENTS THE STANDARD PLANS BOOK DATED 2010.

REVISED STANDARD PLAN RSP D72B

2010 REVISED STANDARD PLAN RSP D72B

6-20-16

Dist	COUNTY	ROUTE	POST MILES TOTAL PROJECT	SHEET No.	TOTAL SHEETS
04	CC/Mrn	580	5.0/7.8, 0.0/3.3	426	579

REGISTERED CIVIL ENGINEER

July 15, 2016
PLANS APPROVAL DATE

REGISTERED PROFESSIONAL ENGINEER
Carl M. Duan
No. C59976
Exp. 6-30-18
CIVIL
STATE OF CALIFORNIA

THE STATE OF CALIFORNIA OR ITS OFFICERS OR AGENTS SHALL NOT BE RESPONSIBLE FOR THE ACCURACY OR COMPLETENESS OF SCANNED COPIES OF THIS PLAN SHEET.

TO ACCOMPANY PLANS DATED _____

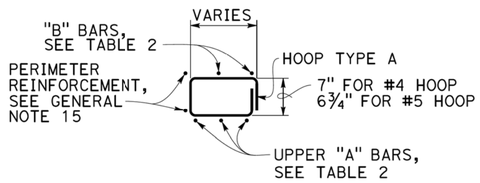

HOOP TYPE A

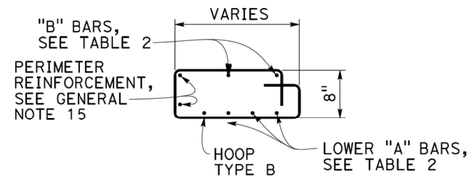

HOOP TYPE B

NOTES:

1. See Revised Standard Plan RSP D72F for General Notes and additional details. See Revised Standard Plan RSP D72G for tables and quantities.
2. Type G4 inlet can use Grate Type 18 or 24. Type G2 inlet uses Grate Type 24.
3. Type G4 inlet details are similar to Type G2 inlet details, except for the addition of a curb and sloped grate to match the adjacent curb and gutter depression.
4. Dimension will vary with different grates, curb types, box width and wall thickness.

TABLE 2 - TOP SLAB REINFORCEMENT

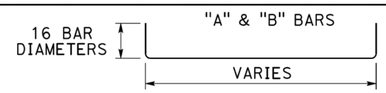

	W/ CURB	W/O CURB
"A" BARS	#4 @ 5 (2 BARS Min)	#5 @ 5 (3 BARS Min)
"B" BARS	#4 @ 10 (2 BARS Min)	#4 @ 12 (2 BARS Min)
HOOPS ("A" & "B")	#4 @ 5	#5 @ 5

ROTATE "A" AND "B" BARS SO HOOKED ENDS WILL MAINTAIN 2" CLEAR COVERAGE.

STATE OF CALIFORNIA
DEPARTMENT OF TRANSPORTATION

CIP DRAINAGE INLETS TYPES G1, G2, G3, G4, G5 AND G6

NO SCALE

RSP D72C DATED JULY 15, 2016 SUPPLEMENTS THE STANDARD PLANS BOOK DATED 2010.

REVISED STANDARD PLAN RSP D72C

2010 REVISED STANDARD PLAN RSP D72C

6-20-16

Dist	COUNTY	ROUTE	POST MILES TOTAL PROJECT	SHEET No.	TOTAL SHEETS
04	CC/Mrn	580	5.0/7.8, 0.0/3.3	427	579

REGISTERED CIVIL ENGINEER

July 15, 2016
PLANS APPROVAL DATE

REGISTERED PROFESSIONAL ENGINEER Carl M. Duan No. C59976 Exp. 6-30-18 CIVIL STATE OF CALIFORNIA

THE STATE OF CALIFORNIA OR ITS OFFICERS OR AGENTS SHALL NOT BE RESPONSIBLE FOR THE ACCURACY OR COMPLETENESS OF SCANNED COPIES OF THIS PLAN SHEET.

TO ACCOMPANY PLANS DATED _____

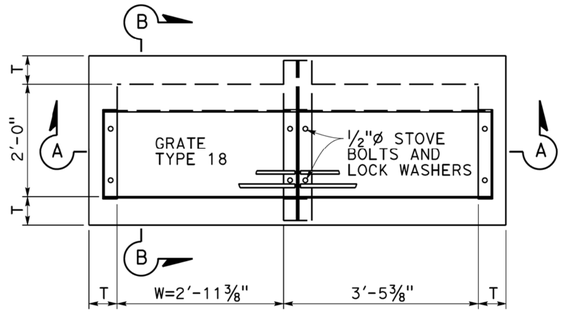

PLAN
TYPE GT1

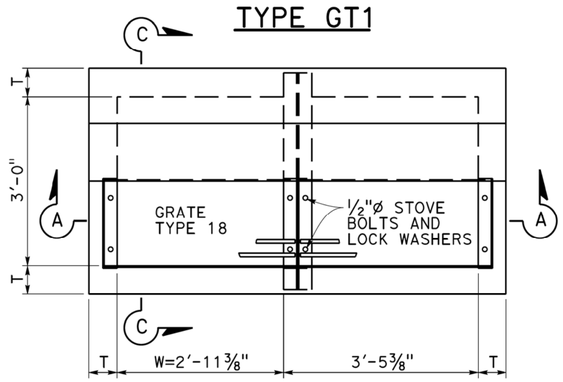

PLAN
TYPE GT2

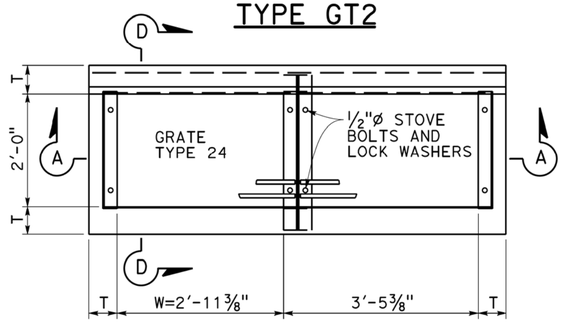

PLAN
TYPE GT3

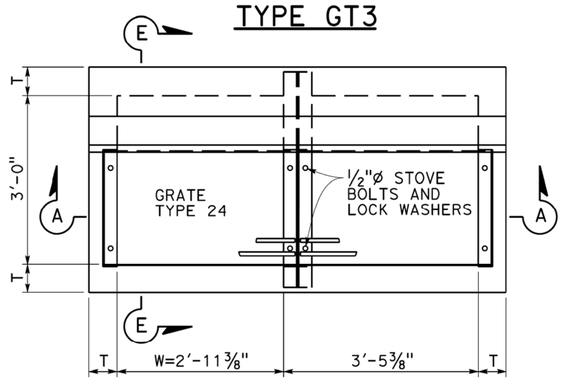

PLAN
TYPE GT4

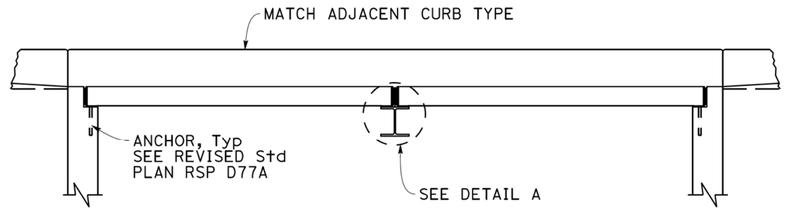

SECTION A-A

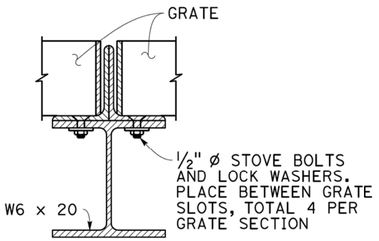

DETAIL A

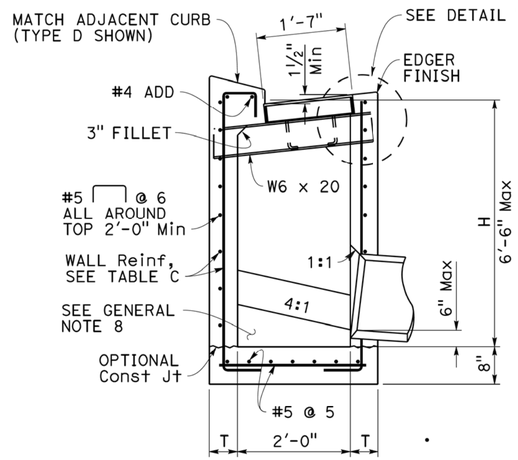

SECTION B-B

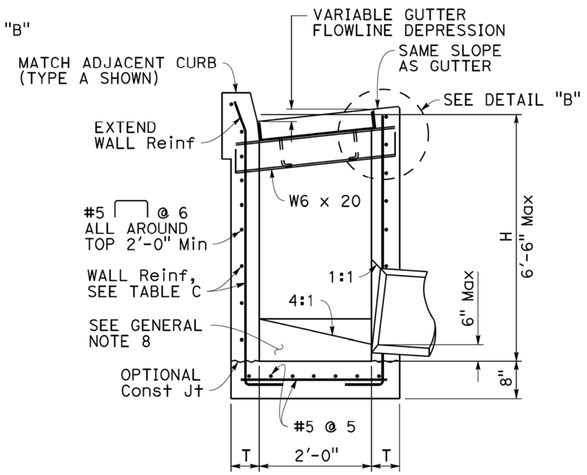

SECTION D-D

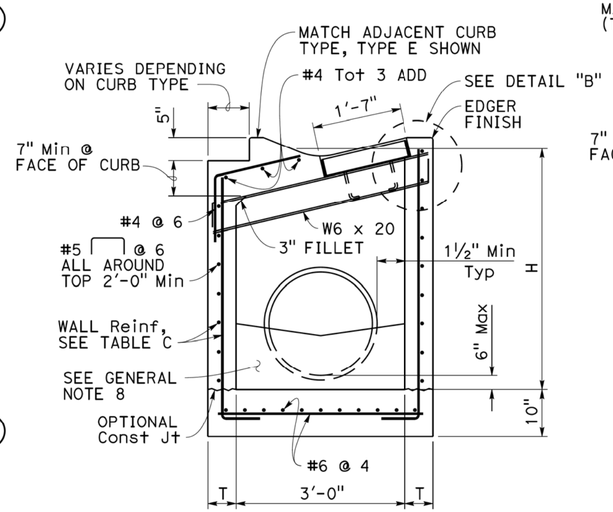

SECTION C-C

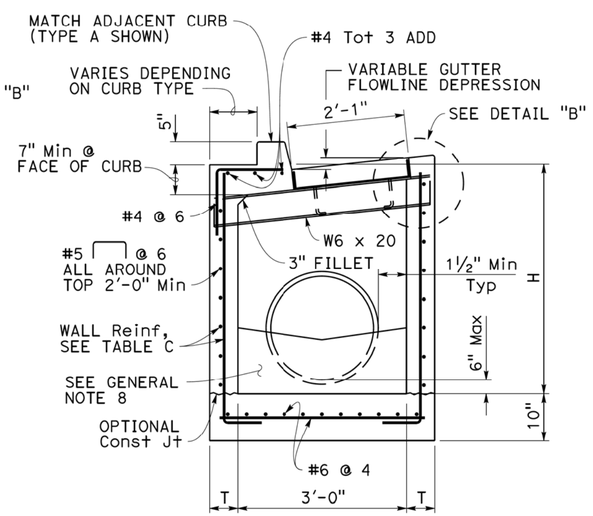

SECTION E-E

NOTES:

1. See Revised Standard Plan RSP D72F for General Notes and additional details. See Revised Standard Plan RSP D72G for tables, wall thickness "T" and quantities.
2. W=2'-11 3/8" for one grate. Add 3'-5 3/8" for additional grates in tandem.
3. Complete joint penetration butt welds may be substituted for the fillet welds on all anchors.
4. Standard square, hexagon, round or equivalent headed anchors may be substituted for the right angle hooks on the anchors shown on this plan.

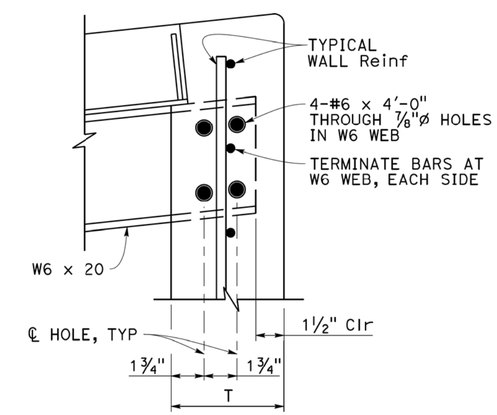

DETAIL "B"
(SIMILAR OPPOSITE END OF W6)

STATE OF CALIFORNIA
DEPARTMENT OF TRANSPORTATION

CIP DRAINAGE INLETS TYPES GT1, GT2, GT3 AND GT4

NO SCALE

RSP D72D DATED JULY 15, 2016 SUPPLEMENTS THE STANDARD PLANS BOOK DATED 2010.

REVISED STANDARD PLAN RSP D72D

2010 REVISED STANDARD PLAN RSP D72D

6-20-16

Dist	COUNTY	ROUTE	POST MILES TOTAL PROJECT	SHEET No.	TOTAL SHEETS
04	CC/Mrn	580	5.0/7.8, 0.0/3.3	428	579

REGISTERED CIVIL ENGINEER

July 15, 2016
PLANS APPROVAL DATE

REGISTERED PROFESSIONAL ENGINEER Carl W. Duan No. C59976 Exp. 6-30-18 CIVIL STATE OF CALIFORNIA

THE STATE OF CALIFORNIA OR ITS OFFICERS OR AGENTS SHALL NOT BE RESPONSIBLE FOR THE ACCURACY OR COMPLETENESS OF SCANNED COPIES OF THIS PLAN SHEET.

TO ACCOMPANY PLANS DATED _____

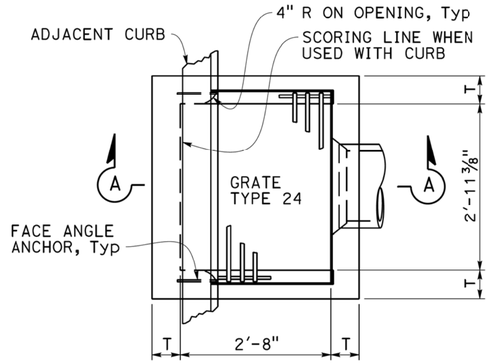

PLAN
TYPE GO

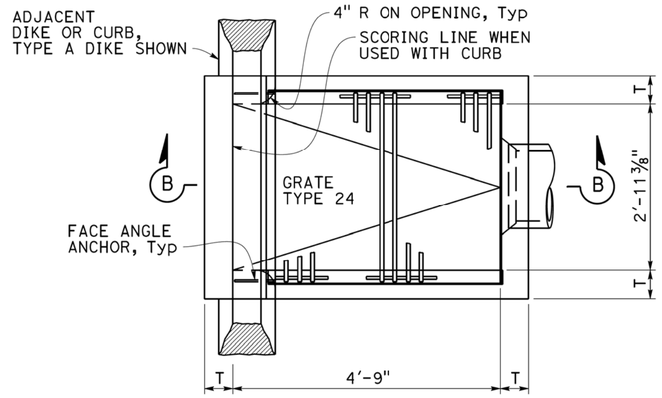

PLAN
TYPE GDO

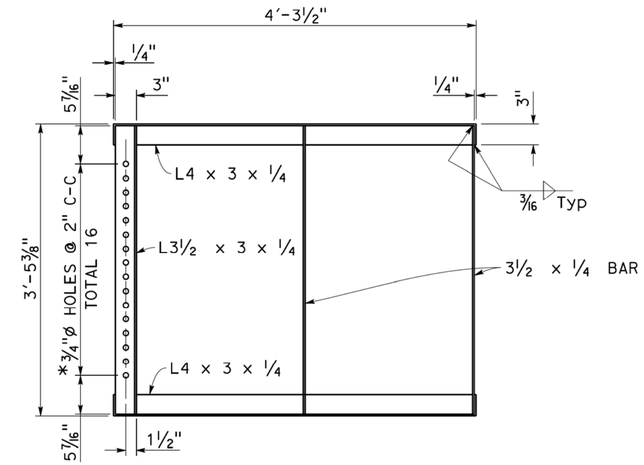

GRATE FRAME FOR TYPE GDO INLET
* HOLES REQUIRED ONLY WITH TRASH RACK

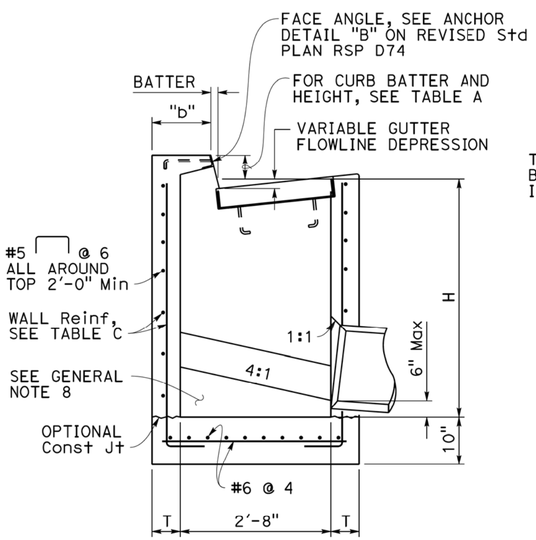

SECTION A-A

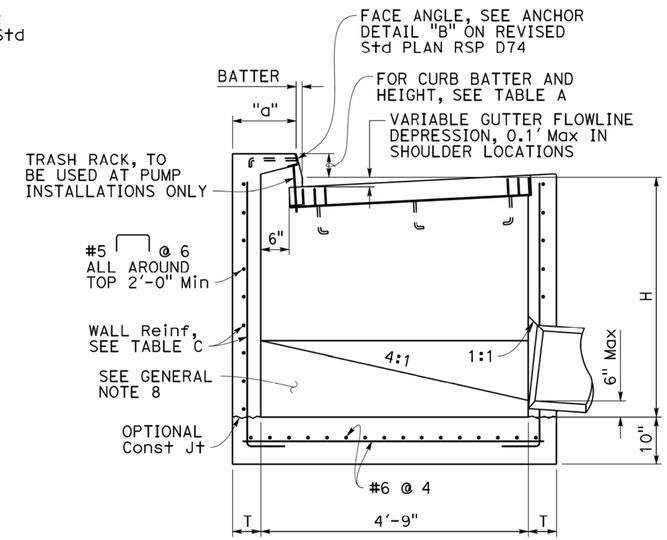

SECTION B-B

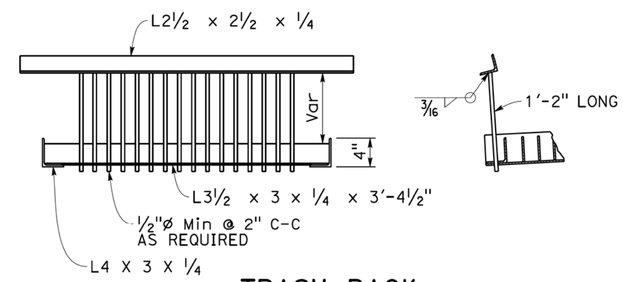

TRASH RACK
(FOR USE WITH PUMP INSTALLATION)

TABLE A				
CURB TYPE	NORMAL CURB HEIGHT	CURB BATTER	"a" DIMENSION	"b" DIMENSION
A1-6	6"	1 1/2"	T+7 1/2"	T+6 1/2"
A1-8	8"	2"	T+7"	T+6"
B1-6	6"	4"	T+5"	T+4"
TYPE A DIKE	6"	3"	T+6"	T+5"

Height of curb opening will vary with the type of curb and the depth of the local depression.

NOTES:

1. See Revised Standard Plan RSP D72F for General Notes and additional details. See Revised Standard Plan RSP D72G for tables, wall thickness "T" and quantities.
2. Where shown on the project plans, place a 3/4"ø plain round protection bar horizontally across the length of the opening and bend back 4" into the inlet wall on each side.
3. Complete joint penetration butt welds may be substituted for the fillet welds on all anchors.
4. Standard square, hexagon, round or equivalent headed anchors may be substituted for the right angle hooks on the anchors shown on this plan.

STATE OF CALIFORNIA
DEPARTMENT OF TRANSPORTATION

CIP DRAINAGE INLETS TYPES GO AND GDO

NO SCALE

RSP D72E DATED JULY 15, 2016 SUPPLEMENTS THE STANDARD PLANS BOOK DATED 2010.

REVISED STANDARD PLAN RSP D72E

2010 REVISED STANDARD PLAN RSP D72E

6-20-16

Dist	COUNTY	ROUTE	POST MILES TOTAL PROJECT	SHEET No.	TOTAL SHEETS
04	CC/Mrn	580	5.0/7.8, 0.0/3.3	429	579

REGISTERED CIVIL ENGINEER

July 15, 2016
PLANS APPROVAL DATE

REGISTERED PROFESSIONAL ENGINEER
Carl M. Duan
No. C59976
Exp. 6-30-18
CIVIL
STATE OF CALIFORNIA

THE STATE OF CALIFORNIA OR ITS OFFICERS OR AGENTS SHALL NOT BE RESPONSIBLE FOR THE ACCURACY OR COMPLETENESS OF SCANNED COPIES OF THIS PLAN SHEET.

TO ACCOMPANY PLANS DATED _____

GENERAL NOTES:

1. "H" is measured from top of bottom slab to the normal gutter grade line undepressed at the curb face.
2. For "T" wall thickness and reinforcement, see Table C on Revised Standard Plan RSP D72G.
3. Wall reinforcement must be placed in the center of the wall thickness with horizontal bars placed on the exterior face. Bottom slab concrete cover must be 3" clear on the interior face unless otherwise noted. Top slab concrete cover must be 2" clear on the exterior face unless otherwise noted. Reinforcement spacing is in inches unless otherwise noted.
4. Steps - None required where "H" is less than 2'-6". Where "H" is 2'-6" or more, install steps with lowest rung 1'-0" above the floor and highest rung not more than 6" below bottom of lid. The distance between steps must not exceed 1'-0" and be uniform throughout the length of the wall. Place steps in the wall without an opening. Steps inserts may be substituted for the bar steps. Step inserts must comply with State Industrial Safety Requirements. See Revised Standard Plan RSP D74 for step details.
5. Pipe(s) can be placed in any wall. Adjacent to each side of the opening, place additional reinforcement equivalent to half the interupted main reinforcement. For larger pipes greater than or equal to 42" diameter, also add 4 diagonal bars, 1 bar each side. Bars must be the same size as the larger of the main vertical or horizontal bars. Extend bars one development length past the intersection with the adjacent diagonal bar, or where bars intersect mid thickness of adjacent wall bottom or top of non-continuous wall, bend ends as required into same plane.
6. Set inlet so that grate bars are parallel to direction of principal surface flow.
7. Curb section must match adjacent curb.
8. Except for inlets used as junction boxes, basin floors must have wood trowel finish and a minimum slope of 4:1, unless otherwise noted, from all directions toward outlet pipe by casting grout fill on top of the bottom slab. The additional volume to achieve the 4:1 slope may also be achieved by casting the bottom slab and fill as a composite concrete element.
9. See Revised Standard Plans RSP D77A and RSP D77B for grate and frame details and weights of miscellaneous iron and steel.
10. See Standard Plans D78A and D78B for gutter depression details.
11. See Revised Standard Plans RSP A87A and RSP A87B for curb and dike details.
12. Details shown apply to metal, concrete and plastic pipe(s).
13. The Contractor may use WWR instead of bar reinforcement. The ratio of bar reinforcement to WWR shall be based on the yield strength ratio.
14. Cast-in-place (CIP) inlets to be formed around all pipes/stubs intersecting the inlet, and concrete poured in one continuous operation.
15. Perimeter reinforcement must not be smaller than main bars and #4 and serves as a rigid frame to position and attach the required structural reinforcement and may be tack welded at outer corners when using ASTM A706 weldable bars.

DESIGN NOTES:

1. Design Specifications: AASHTO LRFD Bridge Design Specifications, 6th edition with 2012 Interims and Errata and CA Amendments.
2. Live Load (AASHTO LRFD 3.6.1.2):
   HL-93, consists of design truck or tandem, and design lane load.
   Dynamic Load Allowance, IM = 33%
   Multiple Presence Factor, m = 1.0
   Design lane load was excluded in Top Slab design.
   A wheel load of 8 kips without impact factor was used for top slabs that are above a curb.
3. Earth Load:
   Vertical pressure = 140 pcf
   Lateral pressure:
   = 100 pcf for walls with flat embankment
   = 140 pcf For walls with slope embankment, 1.5:1 Max
4. Downdrag: ϕ = 34° and γ_E = 120 pcf.
5. Buoyancy: γ_W = 62.4 pcf to finished grade
6. Reinforced Concrete: f'c = 3.6 ksi, fy = 60.0 ksi.
7. Soil pressures shown are factored per AASHTO LRFD and include self-weight, live load and downdrag.

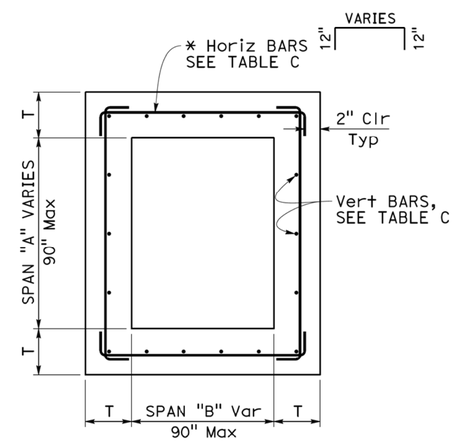

TYPICAL INLET PLAN

* ALTERNATIVE HORIZONTAL BARS

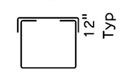

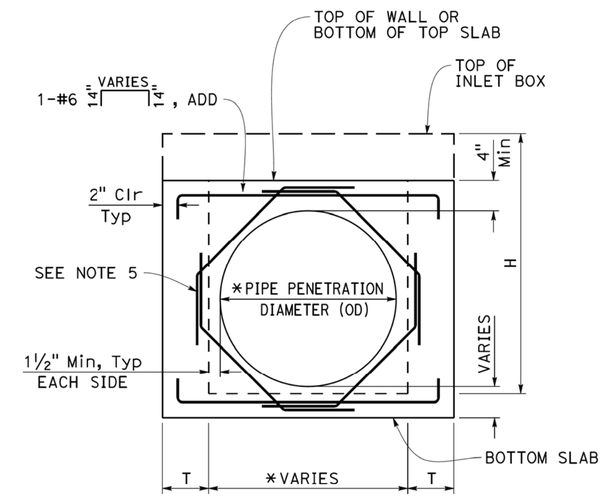

TYPICAL WALL
W/ PIPE OPENING

* SEE "SKEWED PIPE PLAN"

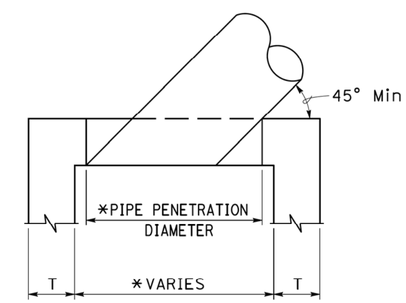

SKEWED PIPE PLAN

* ADJUST PIPE PENETRATION AND BOX WIDTH FOR SKEWED PIPES.

STATE OF CALIFORNIA
DEPARTMENT OF TRANSPORTATION

CIP DRAINAGE INLET NOTES

NO SCALE

RSP D72F DATED JULY 15, 2016 SUPPLEMENTS THE STANDARD PLANS BOOK DATED 2010.

REVISED STANDARD PLAN RSP D72F

2010 REVISED STANDARD PLAN RSP D72F

6-20-16

Dist	COUNTY	ROUTE	POST MILES TOTAL PROJECT	SHEET No.	TOTAL SHEETS
04	CC/Mrn	580	5.0/7.8, 0.0/3.3	430	579

REGISTERED CIVIL ENGINEER

July 15, 2016
PLANS APPROVAL DATE

REGISTERED PROFESSIONAL ENGINEER
Carl M. Duan
No. C59976
Exp. 6-30-18
CIVIL
STATE OF CALIFORNIA

THE STATE OF CALIFORNIA OR ITS OFFICERS OR AGENTS SHALL NOT BE RESPONSIBLE FOR THE ACCURACY OR COMPLETENESS OF SCANNED COPIES OF THIS PLAN SHEET.

TO ACCOMPANY PLANS DATED _____

TABLE A - CONCRETE QUANTITIES

TYPE	H=3'-0" TO 8'-0"		H=8'-1" TO 20'-0"	
	H=3'-0" (CY)	ADDITIONAL CONCRETE PER FOOT (CY)	H=8'-1" (CY)	ADDITIONAL CONCRETE PER FOOT (CY)
G1	0.95	0.220	SEE NOTE 2	SEE NOTE 2
G2*	2.00	0.411	5.11	0.525
G3	1.03	0.220	SEE NOTE 2	SEE NOTE 2
G4 (TYPE 18)*	2.02	0.411	5.14	0.525
G4 (TYPE 24)*	1.99	0.411	5.10	0.525
G5	1.02	0.220	SEE NOTE 2	SEE NOTE 2
G6	1.04	0.220	SEE NOTE 2	SEE NOTE 2
OS	1.53	0.278	5.08	0.504
OL7	2.06	0.278	6.17	0.566
OL10	2.85	0.278	6.85	0.566
OL14	3.81	0.278	7.78	0.566
OL21	5.71	0.278	9.62	0.566
GOL7	2.48	0.313	6.89	0.630
GOL10	3.41	0.313	7.85	0.630
GT1	1.72	0.248	SEE NOTE 2	SEE NOTE 2
GT2	2.93	0.530	7.73	0.762
GT3	1.74	0.348	SEE NOTE 2	SEE NOTE 2
GT4	2.83	0.530	7.62	0.762
GO	1.26	0.245	4.90	0.506
GDO	1.74	0.322	6.33	0.647

* Quantities are based on the minimum interior dimensions.

TABLE B - REINFORCEMENT QUANTITIES

TYPE	H=3'-0" TO 8'-0"		H=8'-1" TO 20'-0"	
	H=3'-0" (LB)	ADDITIONAL REINFORCEMENT PER FOOT (LB)	H=8'-1" (LB)	ADDITIONAL REINFORCEMENT PER FOOT (LB)
G1	118	22.20	SEE NOTE 2	SEE NOTE 2
G2*	729	86.48	1794	171.79
G3	118	22.20	SEE NOTE 2	SEE NOTE 2
G4 (TYPE 18)*	647	86.48	1675	171.79
G4 (TYPE 24)*	647	86.48	1675	171.79
G5	118	22.20	SEE NOTE 2	SEE NOTE 2
G6	118	22.20	SEE NOTE 2	SEE NOTE 2
OS	245	49.88	1057	120.77
OL7	458	50.53	1324	126.75
OL10	729	50.53	1595	126.75
OL14	982	50.53	1849	126.75
OL21	1453	50.53	2320	126.75
GOL7	644	83.57	1969	148.79
GOL10	883	83.57	2208	148.79
GT1	486	96.91	SEE NOTE 2	SEE NOTE 2
GT2	1040	117.08	2543	233.37
GT3	486	96.91	SEE NOTE 2	SEE NOTE 2
GT4	1001	117.08	2556	237.88
GO	308	32.44	1013	96.56
GDO	519	57.09	1654	165.66

* Quantities are based on the minimum interior dimensions.

TABLE D

INLET	CURB USED IN QUANTITIES
G1	-
G2	-
G3	A1-6
G4 (Type 18)	A1-6
G4 (Type 24)	A1-6
G5	B1-4
G6	½E
OS	-
OL7	-
OL10	-
OL14	-
OL21	-
GOL7	-
GOL10	-
GT1	D-6
GT2	E
GT3	A2-8
GT4	A2-8
GO	-
GDO	-

TABLE C - WALL REINFORCEMENT

TYPE	H≤8 (T=6",UON)		8<H≤20 (T=11",UON)	
	HORIZ	VERTICAL	HORIZ	VERTICAL
OS	#4 @ 8	#4 @ 6	#5 @ 6	#6 @ 4.5
OL	#4 @ 6	#4 @ 6	#5 @ 6	#6 @ 4.5
GOL	#5 @ 6	#5 @ 8	#6 @ 5	#6 @ 4.5
G1 (H≤6-6")	#3 @ 6	#3 @ 6	-	-
G2	T=9" #5 @ 5	#5 @ 5	T=11" #6 @ 4	#6 @ 4.5
G3 (H≤6-6")	#3 @ 6	#3 @ 6	-	-
G4	T=9" #5 @ 5	#5 @ 5	T=11" #6 @ 4	#6 @ 4.5
G5 (H≤6-6")	#3 @ 6	#3 @ 6	-	-
G6 (H≤6-6")	#3 @ 6	#3 @ 6	-	-
GT1 (H≤6-6")	#5 @ 6	#5 @ 6	-	-
GT2	T=8" #5 @ 6	#5 @ 6	#6 @ 4	#6 @ 4.5
GT3 (H≤6-6")	#5 @ 6	#5 @ 6	-	-
GT4	T=8" #5 @ 6	#5 @ 6	#6 @ 4	#6 @ 4.5
GO	#4 @ 9	#4 @ 6	#4 @ 6	#6 @ 4.5
GDO	#4 @ 6	#4 @ 6	#5 @ 4	#6 @ 4.5

TABLE E

SOIL PRESSURE BELOW BASE SLAB (ksf)		
TYPE	H=8'-0"	8'-0"< H ≤20'-0"
OS	2.93	5.56
OL*	2.93	5.56
GOL*	2.50	5.06
G1	3.67	-
G2	2.99	5.91
G3	3.67	-
G4	2.99	5.91
G5	3.67	-
G6	3.67	-
GT1	3.66	-
GT2	3.91	6.07
GT3	3.86	-
GT4	3.91	6.07
GO	3.42	6.11
GDO	2.52	6.95

* Main Box

NOTES:

1. No deduction or adjustment was made to the quantities of concrete and reinforcement for pipe openings, floor alternatives or curb type.
2. Maximum allowable height is 6'-6".
3. Quantities are approximate and for design purposes only.
4. Design is based on envelope of level and sloped ground.

STATE OF CALIFORNIA
DEPARTMENT OF TRANSPORTATION

CIP DRAINAGE INLET TABLES

NO SCALE

RSP D72G DATED JULY 15, 2016 SUPPLEMENTS THE STANDARD PLANS BOOK DATED 2010.

REVISED STANDARD PLAN RSP D72G

2010 REVISED STANDARD PLAN RSP D72G

6-20-16

Dist	COUNTY	ROUTE	POST MILES TOTAL PROJECT	SHEET No.	TOTAL SHEETS
04	CC/Mrn	580	5.0/7.8, 0.0/3.3	431	579

REGISTERED CIVIL ENGINEER

April 19, 2013
PLANS APPROVAL DATE

REGISTERED PROFESSIONAL ENGINEER Raymond Don Tsztoo No. C37332 Exp. 6-30-14 CIVIL STATE OF CALIFORNIA

THE STATE OF CALIFORNIA OR ITS OFFICERS OR AGENTS SHALL NOT BE RESPONSIBLE FOR THE ACCURACY OR COMPLETENESS OF SCANNED COPIES OF THIS PLAN SHEET.

TO ACCOMPANY PLANS DATED _____

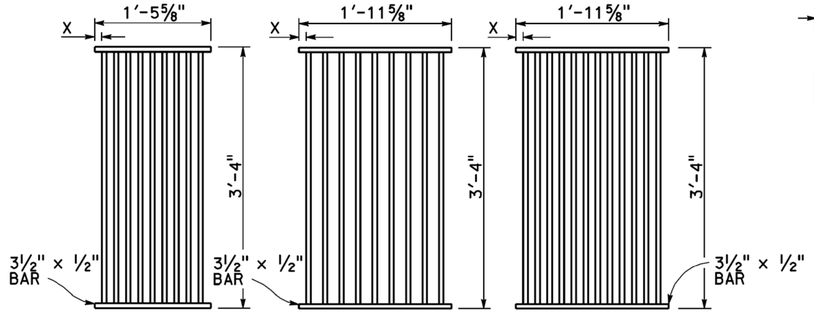

TYPE 18-9
1⅜" Clear spacing. Use within the roadbed on highways where bicycles and pedestrians are excluded.

TYPE 24-9
2" Clear spacing. Use in locations off the roadbed on all types of highways.

TYPE 24-12
1⅜" Clear spacing. Use within the roadbed on highways where bicycles and pedestrians are excluded.

RECTANGULAR GRATE DETAILS
(See table below)

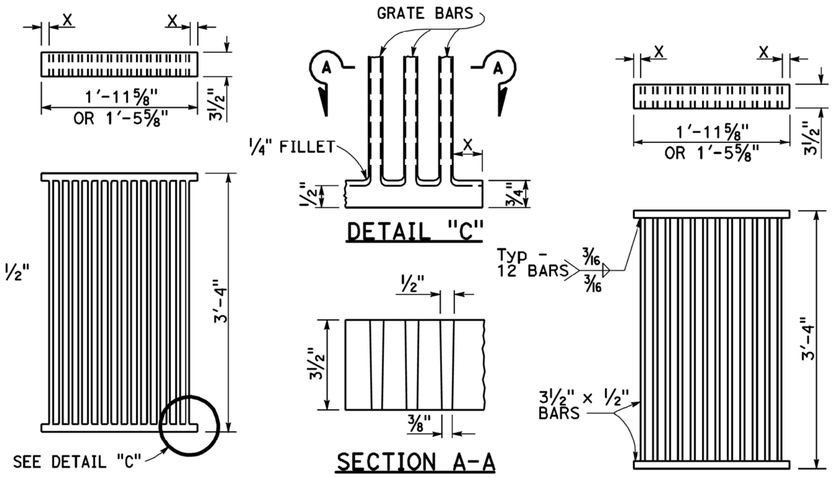

ALTERNATIVE CAST DUCTILE IRON GRATE OR CAST CARBON STEEL GRATE

ALTERNATIVE WELDED GRATE

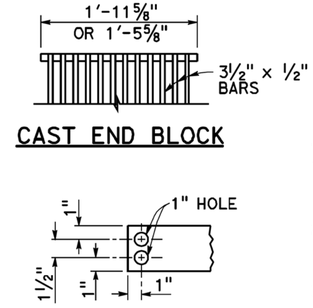

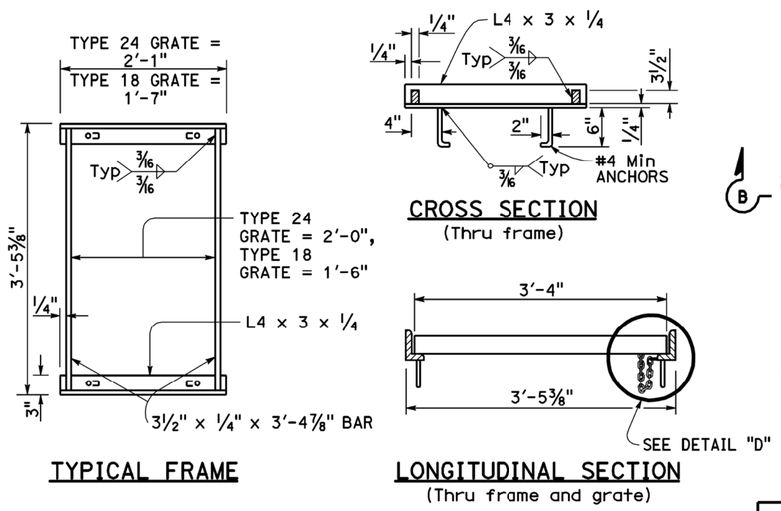

RECTANGULAR FRAME DETAILS
(For all rectangular grates)

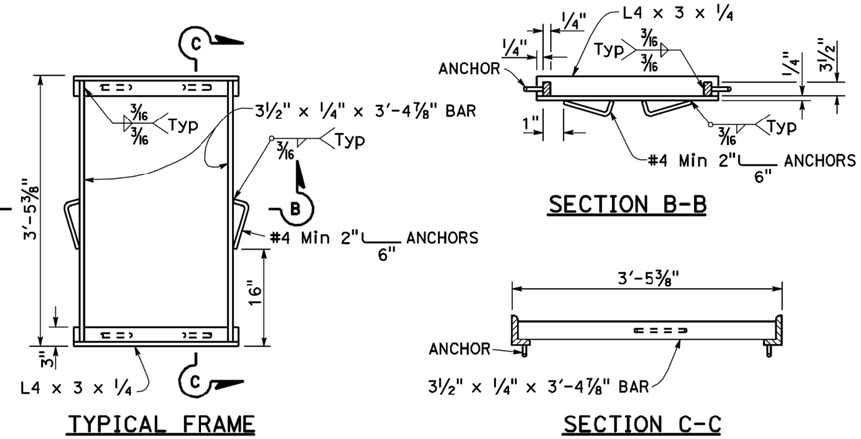

ALTERNATIVE ANCHOR FOR RECTANGULAR FRAME
(For details not shown, See Rectangular Frame Details)

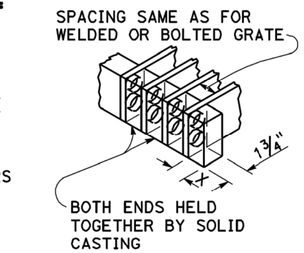

ALTERNATIVE CAST DUCTILE IRON OR CAST CARBON STEEL END BLOCK GRATE

NOTES:

1. Grate type numbers refer to approximate width of grate in inches and number of bars, respectively.
2. Contractor has the option of using cast ductile iron, cast carbon steel, welded, bolted, or cast end block grate.
3. Rounded top of bars optional on all grates.
4. Pipe inlets with a grate shall be placed so that bars parallel direction of principle surface flow.
5. Complete joint penetration butt welds may be substituted for the fillet welds on all anchors.
6. Standard square, hexagon, round or equivalent headed anchors may be substituted for the right angle hooks on the anchors shown on this plan.
7. Grate and frame weights are based on welded grates (weights of face angles, steps, protection bars, etc. are not included).
8. Connect chain to grate and frame only at locations shown on the plans. When chain is required, do not use cast ductile iron grates.

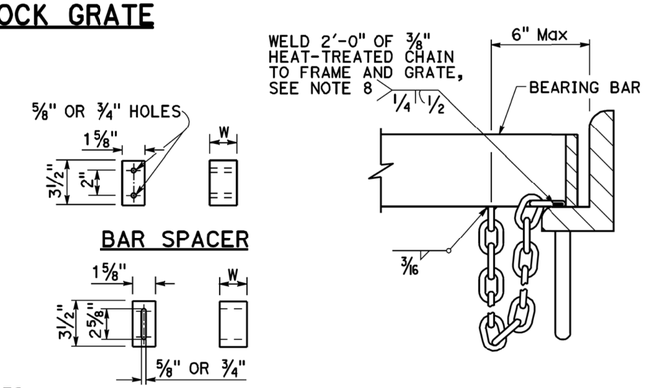

GRATE BAR SPACING TABLE

TYPE	No. OF BARS	CLEAR BAR SPACING	X
18-9	9	1⅜"	1 1/16"
24-9	9	2"	1 9/16"
24-12	12	1⅜"	1¼"

INLET TYPE	COVER TYPE	WEIGHT LB
OS	PLATE	174
OL-7	PLATE	170
OL-10	PLATE	170
OL-14	PLATE	170
OL-21	PLATE	170
OCP	PLATE	112
OCPI	PLATE	112
OCPI	REDWOOD	42
OMP	PLATE	177
OMPI	PLATE	177

INLET TYPE	GRATE TYPE	No. OF GRATES	WEIGHT LB
GDO	24-12	2	634
GOL-7	24-12	1	326
GOL-10	24-12	1	326
GO,G1,G2,G3,G4 (TYPE 24)	24-9	1	263
	24-12	1	326
G4 (TYPE 18),G5,G6	18-9	1	249
GT1	18-9	2	498
GT2	18-9	2	498
GT3	24-12	2	652
GT4	24-12	2	652
TRASH RACK			22
GRATE CHAIN			3

BASIS FOR Misc IRON & STEEL FINAL PAY WEIGHTS FOR DRAINAGE INLETS
(See Note 7)

STATE OF CALIFORNIA
DEPARTMENT OF TRANSPORTATION

GRATE DETAILS No. 1

NO SCALE

RSP D77A DATED APRIL 19, 2013 SUPERSEDES RSP D77A DATED JULY 20, 2012 AND STANDARD PLAN D77A DATED MAY 20, 2011 - PAGE 164 OF THE STANDARD PLANS BOOK DATED 2010.

REVISED STANDARD PLAN RSP D77A

2010 REVISED STANDARD PLAN RSP D77A

4-4-13

Dist	COUNTY	ROUTE	POST MILES TOTAL PROJECT	SHEET No.	TOTAL SHEETS
04	CC/Mrn	580	5.0/7.8, 0.0/3.3	432	579

REGISTERED CIVIL ENGINEER

April 19, 2013
PLANS APPROVAL DATE

Raymond Don Tsztoo No. C37332 Exp. 6-30-14 CIVIL — REGISTERED PROFESSIONAL ENGINEER — STATE OF CALIFORNIA

THE STATE OF CALIFORNIA OR ITS OFFICERS OR AGENTS SHALL NOT BE RESPONSIBLE FOR THE ACCURACY OR COMPLETENESS OF SCANNED COPIES OF THIS PLAN SHEET.

TO ACCOMPANY PLANS DATED _____

2010 REVISED STANDARD PLAN RSP D77B

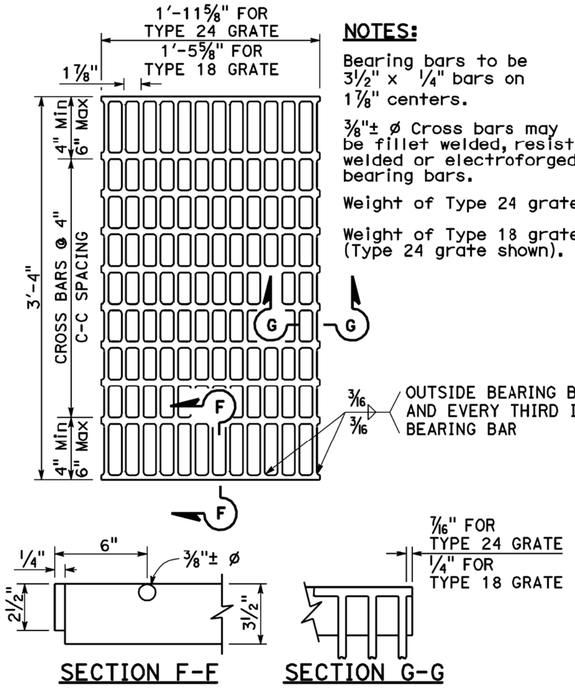

SECTION F-F SECTION G-G

TYPE 18-10 AND 24-13 GRATE

(Welded Steel)

NOTES:

Bearing bars to be 3½" x ¼" bars on 1⅞" centers.

⅜"± ø Cross bars may be fillet welded, resistance welded or electroforged to bearing bars.

Weight of Type 24 grate = 141 LBS.

Weight of Type 18 grate = 107 LBS. (Type 24 grate shown).

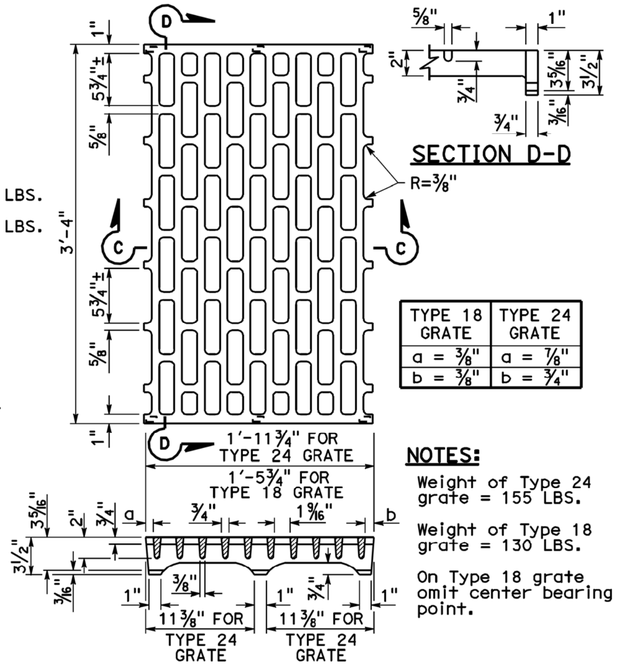

SECTION D-D

TYPE 18 GRATE	TYPE 24 GRATE
a = ⅜"	a = ⅞"
b = ⅜"	b = ¾"

NOTES:

Weight of Type 24 grate = 155 LBS.

Weight of Type 18 grate = 130 LBS.

On Type 18 grate omit center bearing point.

SECTION C-C

TYPE 18-8C AND 24-10C GRATE

(Cast ductile iron)

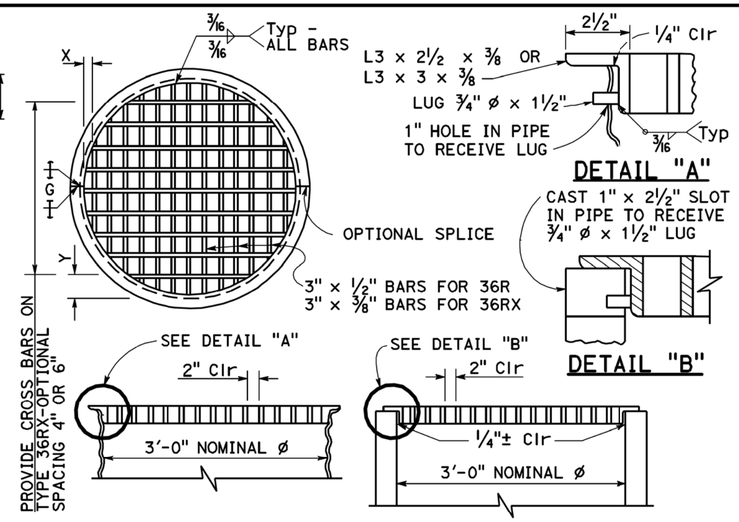

TYPE 36R AND 36RX GRATE DETAILS

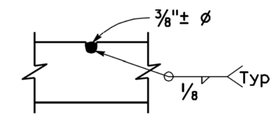

⅜"± ø Cross bars may be fillet welded, resistance welded or electroforged to bearing bars.

CROSS BAR DETAIL TYPE 36RX GRATE (WELDED STEEL)

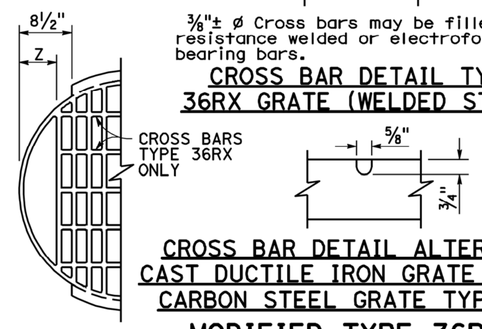

CROSS BAR DETAIL ALTERNATIVE CAST DUCTILE IRON GRATE OR CAST CARBON STEEL GRATE TYPE 36RX

MODIFIED TYPE 36R AND 36RX GRATE FOR ODI INLET

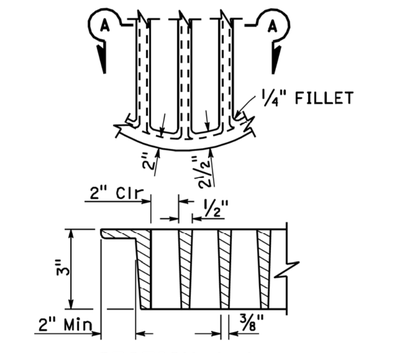

SECTION A-A

ALTERNATIVE CAST DUCTILE IRON GRATE OR CAST CARBON STEEL GRATE TYPE 36R AND 36RX

NOTES:

1. When alternative grates are allowed - Final pay based on alternative with the lesser weight.
2. Use frame shown on Standard Plan D74A, D74B or RSP D77A as appropriate.
3. When Type 24-10S, 24-12X or 24-13 grates are used with GDO Inlets, a ¼" x 3½" x 3'-4⅞" steel bar shall be welded across the center of inlet frame to separate the individual grates.
4. See Revised Standard Plan RSP D77A for connecting chain to welded grate and frame. When chain is required, do not use cast ductile iron grate.

BASIS FOR Misc IRON AND STEEL FINAL PAY WEIGHTS FOR DRAINAGE INLETS

INLET TYPE	GRATE TYPE	No. OF GRATES	WEIGHT LB
GDO (SEE NOTE 4)	24-10C	2	391
	24-10S	2	456
	24-12X	2	473
	24-13	2	374
GO,GOL,G1,G2, G3,G4 (TYPE 24)	24-10C	1	202
	24-10S	1	229
	24-12X	1	239
	24-13	1	188
G4 (TYPE 18) G5,G6	18-8S	1	187
	18-9X	1	187
	18-10	1	149
GT1,GT2	18-8S	2	374
	18-9X	2	374
	18-10	2	298
GT3,GT4	24-10C	2	404
	24-10S	2	458
	24-12X	2	478
	24-13	2	376
ODI	36RX (Mod)	1	196
GMP,GCP,GCPI	36RX	1	215
ODI	36R (Mod)	1	220
GMP,GCP,GCPI	36R	1	236
TRASH RACK			22
GRATE CHAIN			3

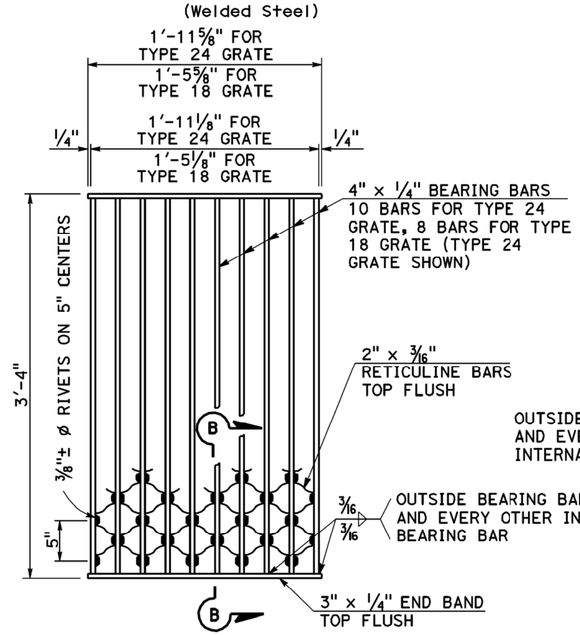

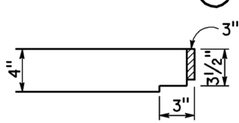

SECTION B-B

NOTES:

Weight of Type 24 grate = 182 LBS.
Weight of Type 18 grate = 145 LBS.

TYPE 18-8S AND 24-10S GRATE

(Welded Steel) Reticuline type

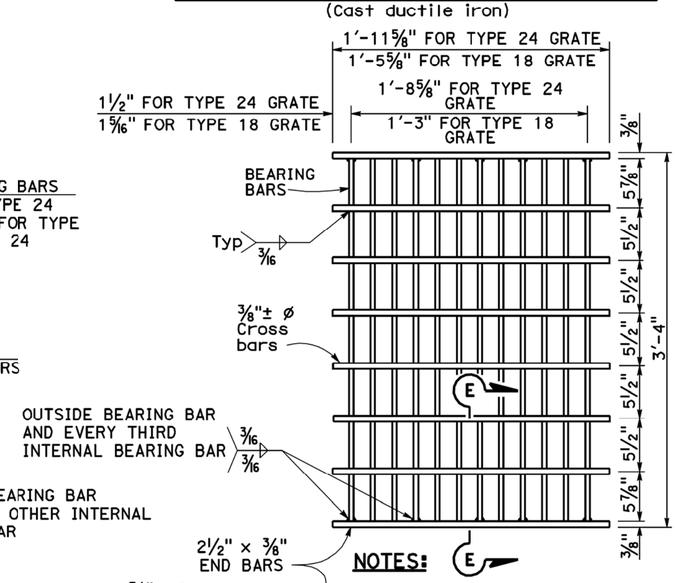

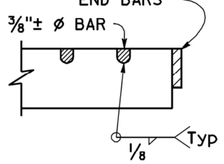

SECTION E-E

NOTES:

Bearing bars to be 3½" x ⅜" bars on 1⅛" centers.

12 Bars for Type 24 grate - 9 bars for Type 18 grates. (Type 24 grate shown).

Weight of Type 24 grate = 192 LBS.

Weight of Type 18 grate = 145 LBS.

⅜"± ø Cross bars may be fillet welded, resistance welded or electroforged to bearing bars.

TYPE 18-9X AND 24-12X GRATE

(Welded Steel)

GRATE BAR SPACING TABLE

TYPE	No. OF BARS	CLEAR BAR SPACING	X	Y 4" SPACING	Y 6" SPACING	Z
36R	13	2"	2⅛"	-	-	-
36RX (STEEL)	15	2"	9/16"	3¾"	5¾"	-
36RX (CAST)	13	2"	2⅛"	3¾"	5¾"	-
36R Mod	12	2"	2⅛"	-	-	5"
36RX Mod (STEEL)	13	2"	9/16"	3¾"	5¾"	5 11/16"
36RX Mod (CAST)	12	2"	2⅛"	3¾"	5¾"	5"

STATE OF CALIFORNIA
DEPARTMENT OF TRANSPORTATION

GRATE DETAILS No. 2

NO SCALE

RSP D77B DATED APRIL 19, 2013 SUPERSEDES RSP D77B DATED JULY 20, 2012 AND STANDARD PLAN D77B DATED MAY 20, 2011 - PAGE 165 OF THE STANDARD PLANS BOOK DATED 2010.

REVISED STANDARD PLAN RSP D77B

4-4-13

Dist	COUNTY	ROUTE	POST MILES TOTAL PROJECT	SHEET No.	TOTAL SHEETS
04	CC/Mrn	580	5.0/7.8, 0.0/3.3	433	579

REGISTERED CIVIL ENGINEER

July 18, 2014
PLANS APPROVAL DATE

REGISTERED PROFESSIONAL ENGINEER Carl W. Duan No. C59976 Exp. 6-30-16 CIVIL STATE OF CALIFORNIA

THE STATE OF CALIFORNIA OR ITS OFFICERS OR AGENTS SHALL NOT BE RESPONSIBLE FOR THE ACCURACY OR COMPLETENESS OF SCANNED COPIES OF THIS PLAN SHEET.

TO ACCOMPANY PLANS DATED _____

2010 REVISED STANDARD PLAN RSP D82

DESIGN NOTES:

Design Specifications:
AASHTO LRFD Bridge Design Specifications, 4th Edition with California Amendments.

Loading:
Live load: (AASHTO LRFD 3.6.1.2)
HL-93 consists of design truck or design tandem and design lane load.

Impact Factor: (Apply to roof slab only)
$IM = 33(1.0-0.125D_E) \geq 0\%$ (AASHTO LRFD 3.6.2.2)
D_E = minimum depth of earth cover

Earth load:
Earth pressure for two conditions:
140 pcf vertical, 42 pcf horizontal
140 pcf vertical, 140 pcf horizontal

Load Factors:
AASHTO LRFD Table 3.4.1.1 & Table 3.4.1.2

Unit stresses:
f'_c = 3600 psi
f_y = 60,000 psi

Distribution "d" bars:
Up to and including 10'-0" cover
Express as a percentage of main positive reinforcement required: $\frac{100}{\sqrt{S}}$, Max 50%,
Over 10'-0" cover,
4 @ 12 maximum

Shear:
$V_c = \{2.14\sqrt{f'_c}+4600\frac{A_s}{bd_e}\frac{Vud_e}{Mu}\}b.d_e \leq 4.0\sqrt{f'_c}b.d_e$ (Pounds)
V_c shall not be less than $3.00\sqrt{f'_c}b.d_e$ for frame members and $2.5\sqrt{f'_c}b.d_e$ for simply supported members.

Exclusion:
Compressive reinforcement and negative moment reduction (for continuity) do not apply.
Axial loading on members has not been considered.

CONSTRUCTION NOTES:

Construction loads:
Strutting required as shown on Standard Plan D88. Strutting may be required on culvert extensions when existing parapet is removed.

Expansion joints:
Invert:
No expansion joints shall be permitted.
Roof and Walls:
When cover is less than span length-
Place ½" premolded expansion joint filler at 30'-0" ± centers outside the paved roadway lanes and place Bridge Detail 3-2, Standard Plan B0-3, at 30'-0" centers under paved roadway lanes.
When cover is more than span length-
Place ½" premolded expansion joint filler at 30'-0" ± centers and additional ½" premolded expansion joints at locations of change in foundation character, as directed by the Engineer.

Construction joints:
Temporary joints may be permitted if normal (or radial) to ℄ of RCB. Otherwise, the contractor is to submit a proposal for consideration.

Cutoff walls:
4'-0" cutoff walls are to be provided at inlet and/or outlet unless adjacent channel is lined and unless otherwise shown. These walls are to be extended if scour conditions warrant.

Earthwork:
See Standard Plan A62E.

Backfill:
See Standard Specifications, except that the difference in level of backfill (against outside walls) shall not exceed 2'-0".

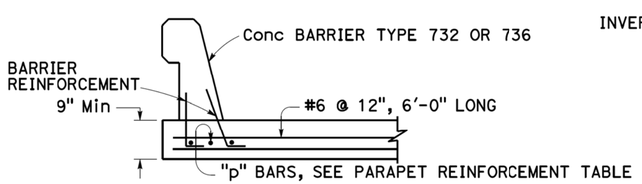

BARRIER SECTION (30'-0" MINIMUM)

GENERAL NOTES:

Designation:
Standard single or multiple box culverts are shown on plans as span times height with maximum cover over roof thus: 8' x 5' RCB with 10' or double 10' x 5' RCB with 20', followed by alternatives.

Alternatives:
Single cell: Invert will be sloped unless "trapezoidal invert", "flat invert" or "V invert" is included in designation.
Multiple cell: Invert will be vee unless "flat invert" is specified. Ends of culvert will be rounded unless "square ends" are designated. Parapets will be as shown unless designated in plans. Such designations may be different for inlet and outlet ends.

Quantities:
Quantities do not include the following:
- Concrete for parapet, paving notches and cut-off wall.
- Reinforcement for 2% splices, parapets, paving notches, cut-off wall and additional required bars for exposed top slab (D-80, Note 9).

Reinforcement placement:
Main reinforcement is to be placed transversely or, for curved culverts, radially. When radial, reinforcing spacing of the "a", "f" and "g" bars is measured along the centerline. Stagger splices not shown. Hooks may be rotated or tilted, as necessary, for clearance.

Special reinforcement coverage:
Box standard plans are not to be used for culverts in a corrosive environment or where there is a severe abrasive flow condition or in freeze-thaw locations.

Special design:
Required for culverts with conditions, loads, design bearing pressures or sizes greater than those given on this plan or Standard Plans D80 & D81. Also required for multiple cell culverts with unequal spans. For culverts with railroad loading, see the current AREMA design specification.

3 or more cells:
For culverts with more than two cells, use dimensions and reinforcement for the standard "double box culvert" and adjust quantities accordingly.

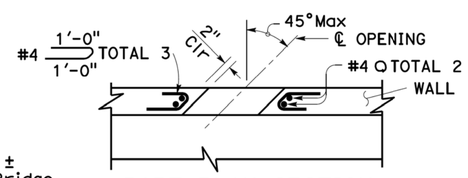

PART PLAN-SECTION

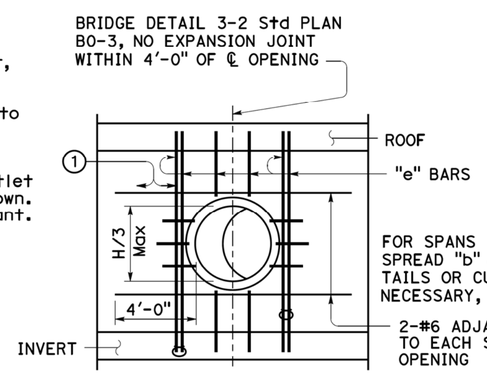

LONGITUDINAL SECTION

UTILITY OPENING-WALL

H=Height of box

(1) Adjacent to each side of the opening, place additional bars equivalent to half the interrupted main reinforcement.

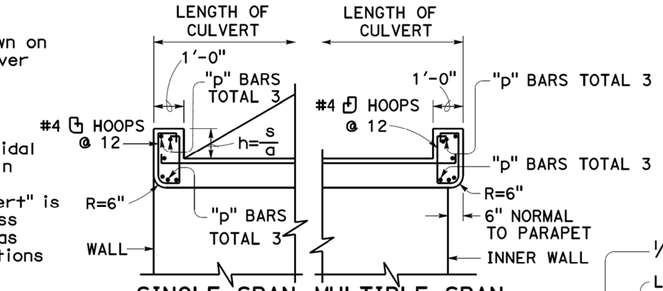

SINGLE SPAN MULTIPLE SPAN

PARAPET DETAIL

s = Clear span (ft)
a = 12 cosine skew angle
h = Height, 1'-0" Min

PARAPET "p" BARS			
SPAN \ SKEW ANGLE	0° TO 15°	16° TO 30°	31° TO 45°
4'	#4	#4	#4
6'	#4	#4	#5
8'	#4	#5	#6
10'	#5	#6	#7
12'	#6	#7	#8
14'	#7	#8	#9

PARAPET REINFORCEMENT

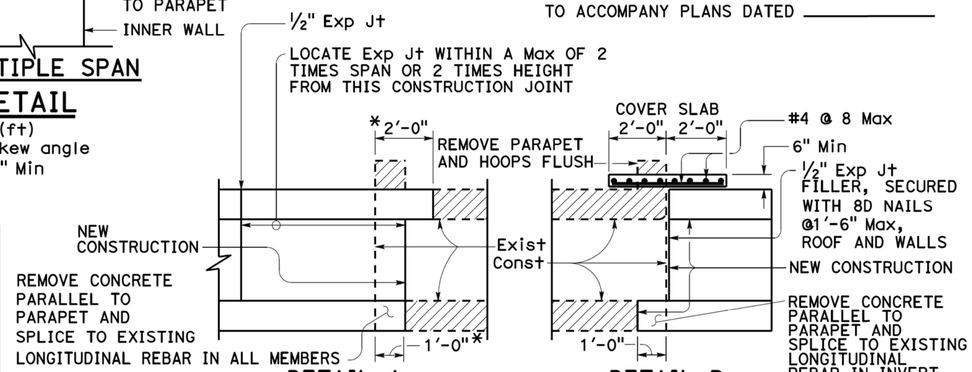

DETAIL A

20° maximum skew as shown. If existing longitudinal and transverse reinforcing bars in top slab are lap spliced with new longitudinal and transverse reinforcing bars, the 20° skew may be exceeded. Lap splicing may require removal of top slab in excess of 2'-0" shown.

DETAIL B

Single cell only, no skew allowed, 1'-0" minimum cover.

* Measured perpendicular to parapet

CULVERT EXTENSION

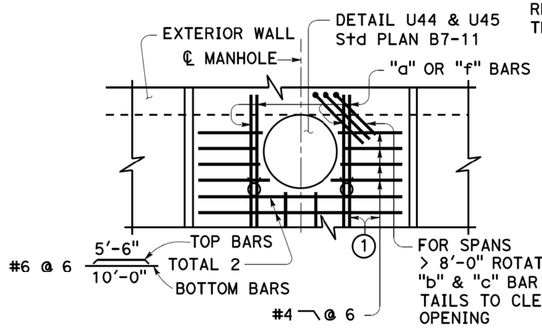

PART PLAN

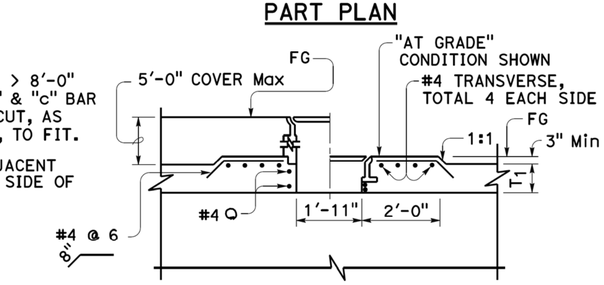

PART LONGITUDINAL SECTION

MANHOLE

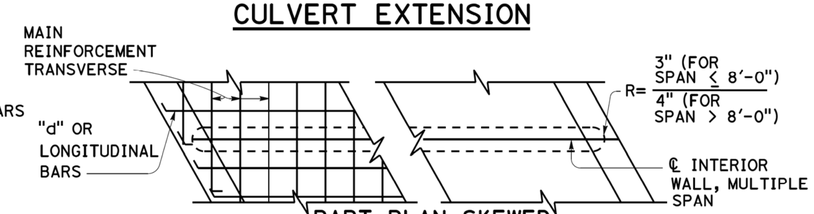

PART PLAN-SKEWED

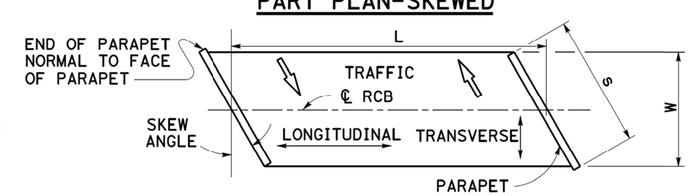

RCB TERMINOLOGY

STATE OF CALIFORNIA
DEPARTMENT OF TRANSPORTATION

CAST-IN-PLACE REINFORCED CONCRETE BOX CULVERT MISCELLANEOUS DETAILS

NO SCALE

RSP D82 DATED JULY 18, 2014 SUPERSEDES STANDARD PLAN D82 DATED MAY 20, 2011 - PAGE 174 OF THE STANDARD PLANS BOOK DATED 2010.

REVISED STANDARD PLAN RSP D82

4-3-14

Dist	COUNTY	ROUTE	POST MILES TOTAL PROJECT	SHEET No.	TOTAL SHEETS
04	CC/Mrn	580	5.0/7.8, 0.0/3.3	434	579

REGISTERED CIVIL ENGINEER

October 30, 2015
PLANS APPROVAL DATE

REGISTERED PROFESSIONAL ENGINEER Bruce D. Swanger No. C61257 Exp. 6-30-17 CIVIL STATE OF CALIFORNIA

THE STATE OF CALIFORNIA OR ITS OFFICERS OR AGENTS SHALL NOT BE RESPONSIBLE FOR THE ACCURACY OR COMPLETENESS OF SCANNED COPIES OF THIS PLAN SHEET.

TO ACCOMPANY PLANS DATED _____

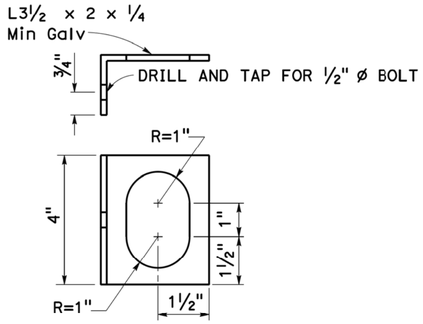

ALTERNATIVE CLIP BRACKET DETAIL

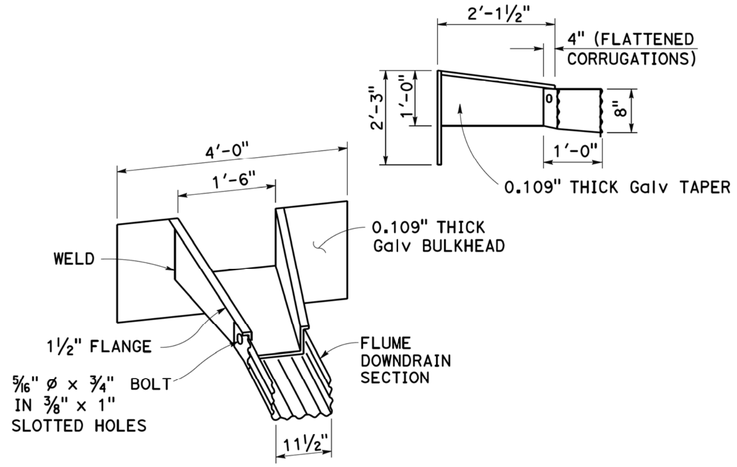

TAPERED INLET

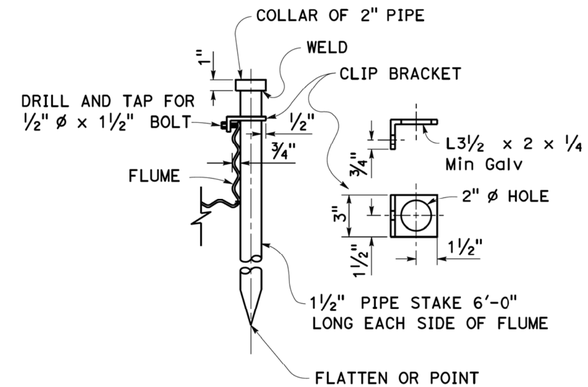

PIPE STAKE ANCHOR DETAIL

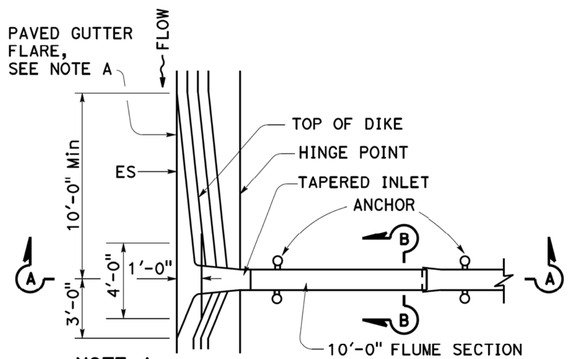

NOTE A

In sag location, use 10'-0" length of paved gutter flare on both sides of inlet.

PLAN

TAPERED INLET AND FLUME DOWNDRAIN

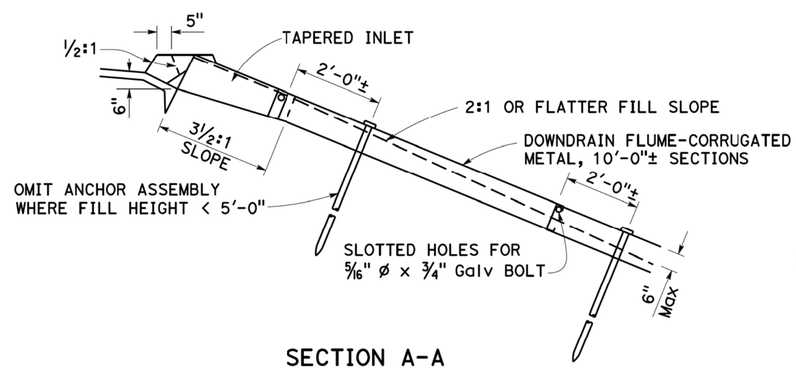

SECTION A-A

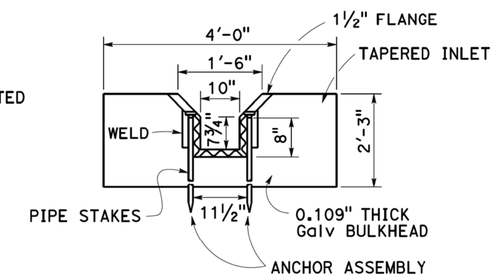

SECTION B-B

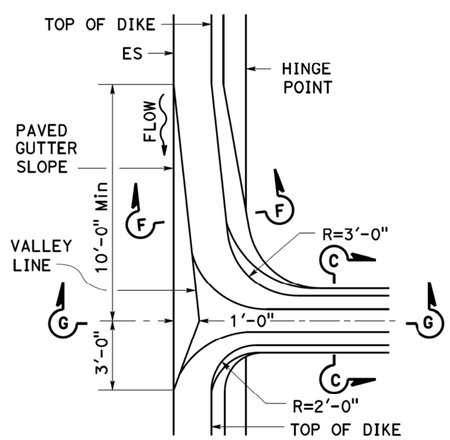

PLAN

MOUNTABLE DIKE

HOT MIX ASPHALT OVERSIDE DRAINS

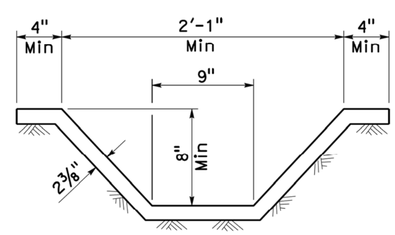

SECTION C-C

See Note 1

NOTE:

1. Cross section of slope ditch may be semicircular, vee or trapezoidal.

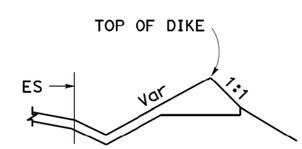

SECTION F-F

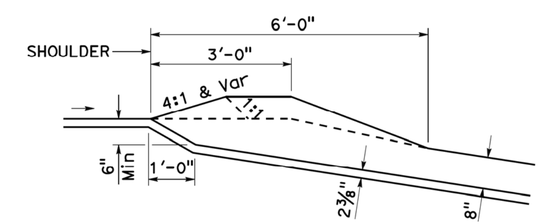

SECTION G-G

STATE OF CALIFORNIA
DEPARTMENT OF TRANSPORTATION

OVERSIDE DRAINS

NO SCALE

RSP D87D DATED OCTOBER 30, 2015 SUPERSEDES STANDARD PLAN D87D DATED MAY 20, 2011 - PAGE 185 OF THE STANDARD PLANS BOOK DATED 2010.

REVISED STANDARD PLAN RSP D87D

2010 REVISED STANDARD PLAN RSP D87D

9-28-15

Dist	COUNTY	ROUTE	POST MILES TOTAL PROJECT	SHEET No.	TOTAL SHEETS
04	CC/Mrn	580	5.0/7.8, 0.0/3.3	435	579

REGISTERED CIVIL ENGINEER

October 30, 2015
PLANS APPROVAL DATE

REGISTERED PROFESSIONAL ENGINEER William K. Farnbach No. C49042 Exp. 9-30-16 CIVIL STATE OF CALIFORNIA

THE STATE OF CALIFORNIA OR ITS OFFICERS OR AGENTS SHALL NOT BE RESPONSIBLE FOR THE ACCURACY OR COMPLETENESS OF SCANNED COPIES OF THIS PLAN SHEET.

TO ACCOMPANY PLANS DATED _____

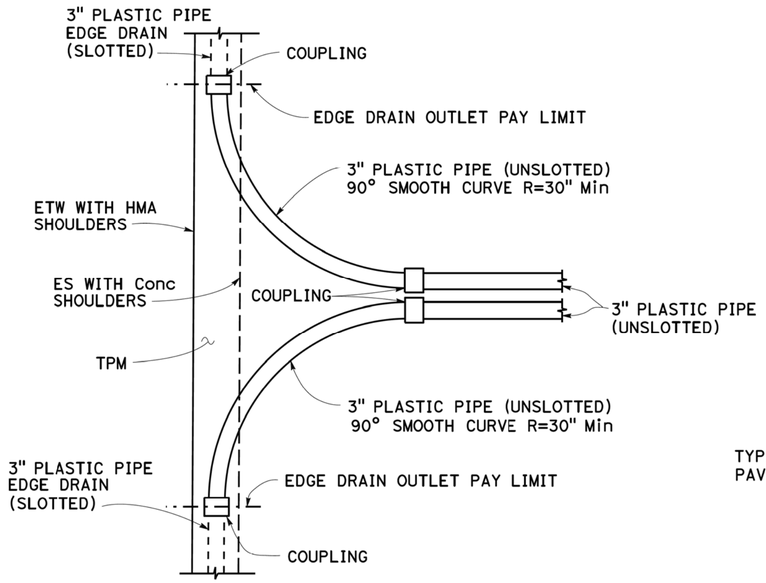

PLAN
DUAL OUTLET AND/OR VENT
See Note 2

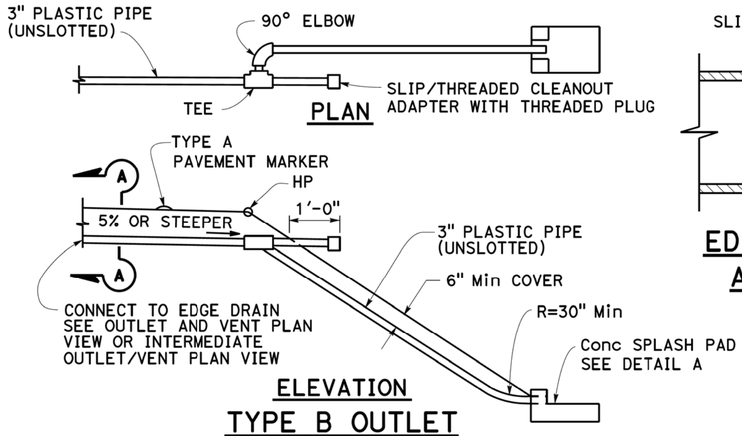

ELEVATION
TYPE B OUTLET

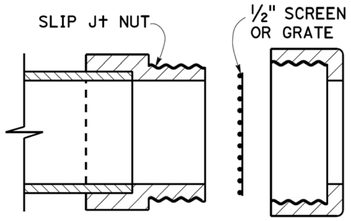

EDGE DRAIN OUTLET AND VENT COVER

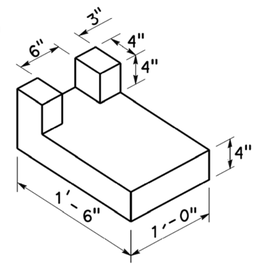

DETAIL A
CONCRETE SPLASH PAD

NOTES:

1. See project plans for location and type of outlet and/or vent installations.
2. The position of slotted plastic pipe and limits of treated permeable material shown are for the Type 1 pavement structure drainage system shown on Revised Standard Plan RSP D99A.
3. The maximum length of plastic pipe outlet shall be 50'-0" measured from the longitudinal centerline of the collector trench to the pipe outlet. For pipe lengths greater than 50'-0" use Type B outlets.
4. See project plans for slope protection details at Type C pipe outlets.
5. Backfill with aggregate base from outside edge paved shoulder to hinge point and backfill with native material in slope area.
6. See Revised Standard Plan RSP D99C for Type G vent detail used with concrete shoulders.

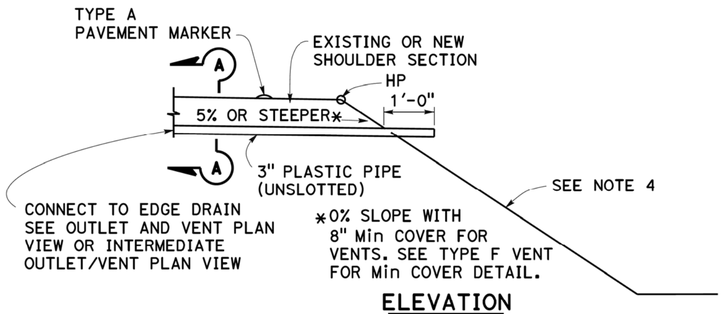

ELEVATION
TYPE C OUTLET AND/OR VENT

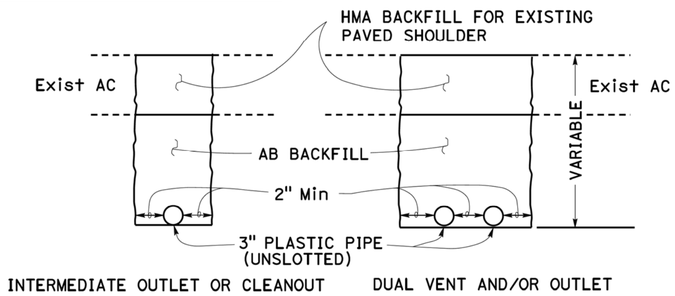

SECTION A-A
OUTLET EXCAVATION AND BACKFILL IN PAVED SHOULDERS
See Note 5

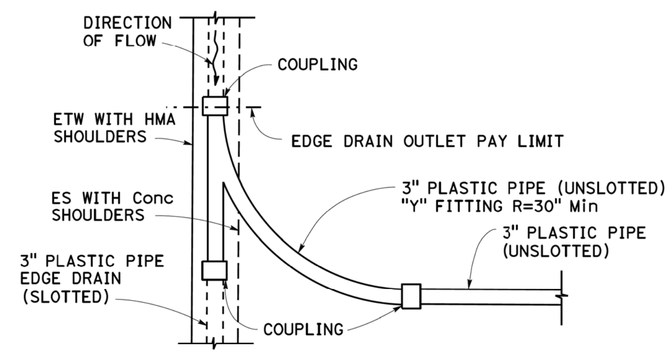

PLAN
INTERMEDIATE OUTLET
See Note 2

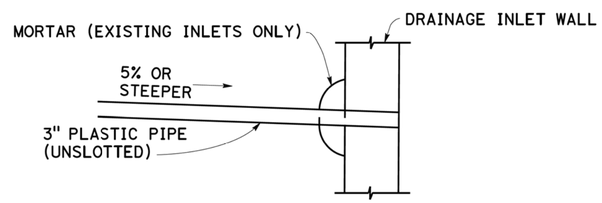

ELEVATION
TYPE D OUTLET CONNECTION TO DRAINAGE INLET

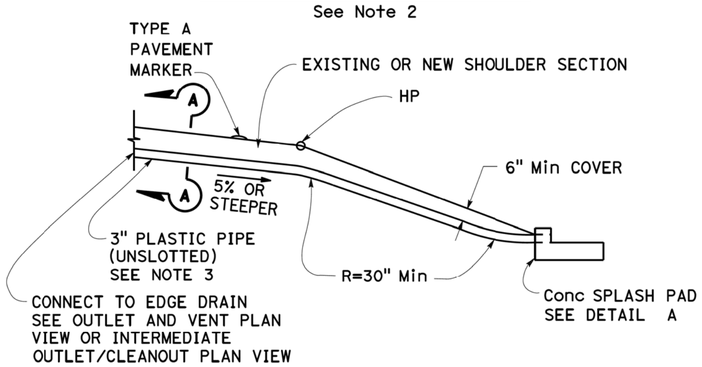

ELEVATION
TYPE A OUTLET

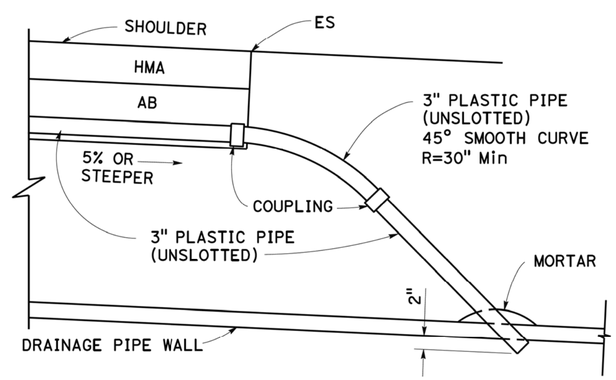

ELEVATION
TYPE E OUTLET CONNECTION TO DRAINAGE PIPE

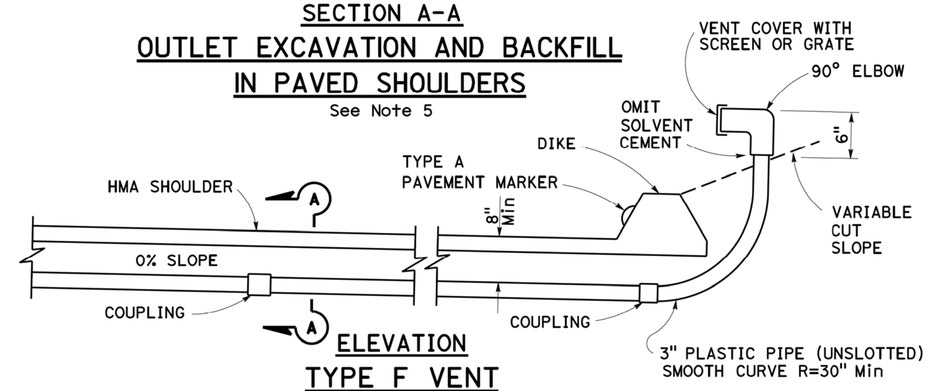

ELEVATION
TYPE F VENT

STATE OF CALIFORNIA
DEPARTMENT OF TRANSPORTATION

EDGE DRAIN OUTLET AND VENT DETAILS

NO SCALE

RSP D99B DATED OCTOBER 30, 2015 SUPERSEDES STANDARD PLAN D99B DATED MAY 20, 2011 - PAGE 212 OF THE STANDARD PLANS BOOK DATED 2010.

REVISED STANDARD PLAN RSP D99B

2010 REVISED STANDARD PLAN RSP D99B

9-28-15

Dist	COUNTY	ROUTE	POST MILES TOTAL PROJECT	SHEET No.	TOTAL SHEETS
04	CC/Mrn	580	5.0/7.8, 0.0/3.3	436	579

William K. Farnbach
REGISTERED CIVIL ENGINEER

October 30, 2015
PLANS APPROVAL DATE

REGISTERED PROFESSIONAL ENGINEER William K. Farnbach No. C49042 Exp. 9-30-16 CIVIL STATE OF CALIFORNIA

THE STATE OF CALIFORNIA OR ITS OFFICERS OR AGENTS SHALL NOT BE RESPONSIBLE FOR THE ACCURACY OR COMPLETENESS OF SCANNED COPIES OF THIS PLAN SHEET.

TO ACCOMPANY PLANS DATED _____

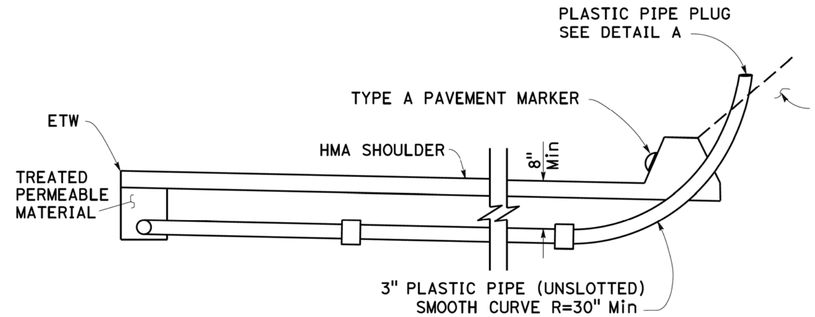

ELEVATION

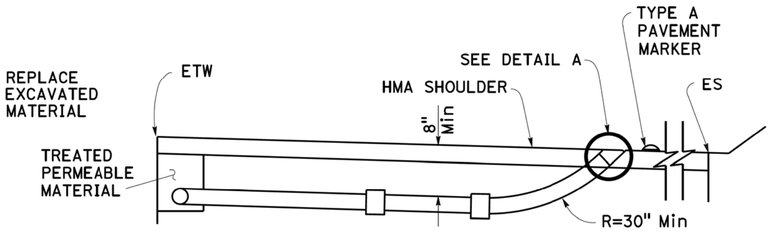

ELEVATION

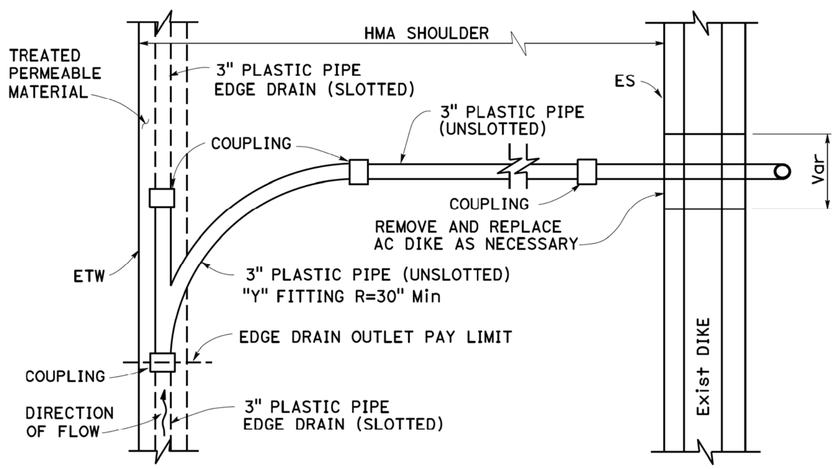

PLAN

TYPE 1 CLEANOUT

See Note 2

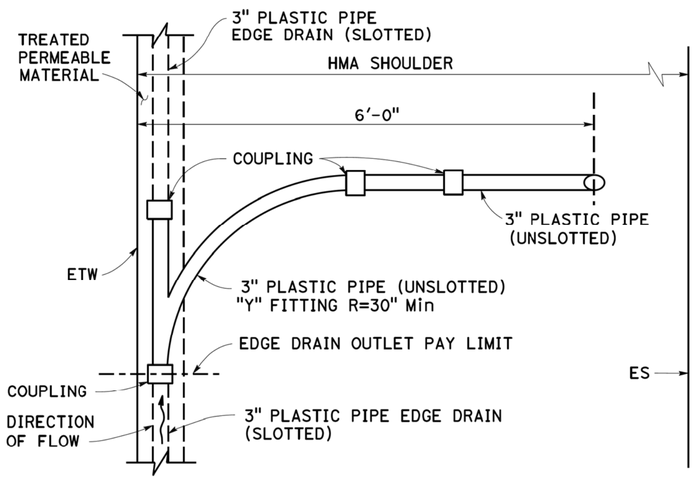

PLAN

TYPE 2 CLEANOUT

See Note 2

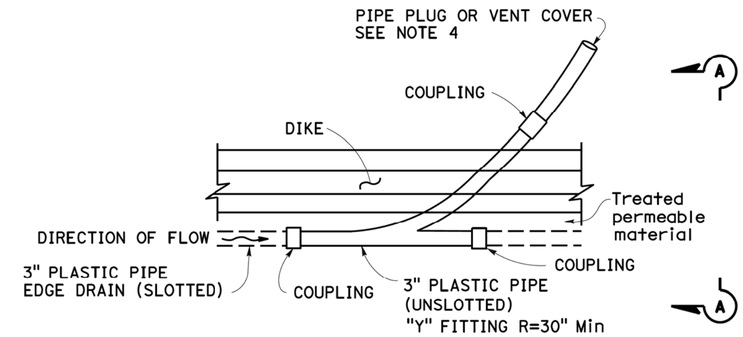

PLAN

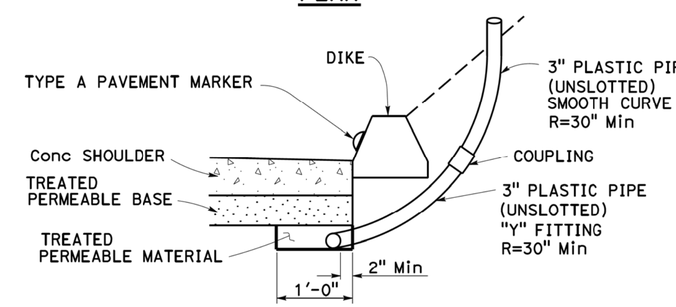

SECTION A-A

TYPE 3 CLEANOUT/TYPE G VENT

See Note 4

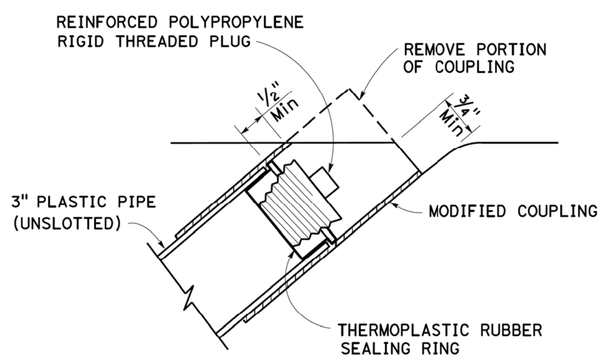

ALTERNATIVE 1

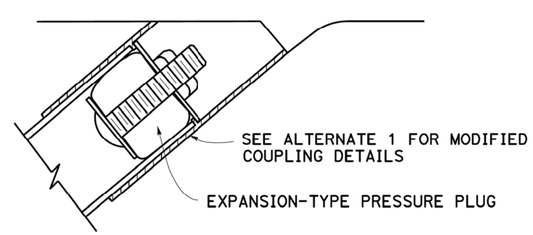

ALTERNATIVE 2

DETAIL A

PLASTIC PIPE PLUG

See Note 3

NOTES:

1. See project plans for location and type of cleanout or vent installations.
2. The position of slotted plastic pipe and limits of treated permeable material shown are for the Type 1 structural section drainage system shown on Revised Standard Plan RSP D99A.
3. Other types of plugs may be substituted with the Engineer's approval.
4. The Type 3 cleanout and Type G vent is for use with concrete shoulders. The Type 6 structural section drainage system from Revised Standard Plan RSP D99A isshown. Use plastic pipe plug shown in Detail A with Type 3 cleanouts. Use vent cover shown on Revised Standard Plan RSP D99B with Type G vents.

STATE OF CALIFORNIA
DEPARTMENT OF TRANSPORTATION

EDGE DRAIN CLEANOUT AND VENT DETAILS

NO SCALE

RSP D99C DATED OCTOBER 30, 2015 SUPERSEDES STANDARD PLAN D99C DATED MAY 20, 2011 - PAGE 213 OF THE STANDARD PLANS BOOK DATED 2010.

REVISED STANDARD PLAN RSP D99C

2010 REVISED STANDARD PLAN RSP D99C

9-28-15

Dist	COUNTY	ROUTE	POST MILES TOTAL PROJECT	SHEET No.	TOTAL SHEETS
04	CC/Mrn	580	5.0/7.8, 0.0/3.3	437	579

LICENSED LANDSCAPE ARCHITECT

July 19, 2013
PLANS APPROVAL DATE

THE STATE OF CALIFORNIA OR ITS OFFICERS OR AGENTS SHALL NOT BE RESPONSIBLE FOR THE ACCURACY OR COMPLETENESS OF SCANNED COPIES OF THIS PLAN SHEET.

LICENSED LANDSCAPE ARCHITECT — Gregory A. Balzer — 2-28-15 Renewal Date — 7-19-13 Date — STATE OF CALIFORNIA

TO ACCOMPANY PLANS DATED _____

A

AB	AGGREGATE BASE
ABS	ACRYLONITRILE-BUTADIENE-STYRENE
AC	ASPHALT CONCRETE
ACC	ARMOR-CLAD CONDUCTORS
Adj	ADJACENT/ADJUSTABLE
AIC	AUXILIARY IRRIGATION CONTROLLER
Alt	ALTERNATIVE
AMEND	AMENDMENT
ARV	AIR RELEASE VALVE
AUTO	AUTOMATIC
AUX	AUXILIARY
AVB	ATMOSPHERIC VACUUM BREAKER

B

B&B	BALLED AND BURLAPPED
B/B	BRASS/BRONZE
B/B/PL	BRASS/BRONZE/PLASTIC
B/PL	BRASS/PLASTIC
BFM	BONDED FIBER MATRIX
Bit Ctd	BITUMINOUS COATED
BP	BOOSTER PUMP
BPA	BACKFLOW PREVENTER ASSEMBLY
BPE	BACKFLOW PREVENTER ENCLOSURE
BV	BALL VALVE

C

C	CONDUIT
CAP	CORRUGATED ALUMINUM PIPE
CARV	COMBINATION AIR RELEASE VALVE
CB	COUPLING BAND
CCA	CAM COUPLER ASSEMBLY
CEC	CONTROLLER ENCLOSURE CABINET
CHDPE	CORRUGATED HIGH DENSITY POLYETHYLENE
CL	CHAIN LINK
CNC	CONTROL AND NEUTRAL CONDUCTORS
Conc	CONCRETE
CP	COPPER PIPE
CS	COMPOST SOCK
CSP	CORRUGATED STEEL PIPE
CST	CENTER STRIP
CV	CHECK VALVE

D

Dia	DIAMETER
DIP	DUCTILE IRON PIPE
DIT	DRIP IRRIGATION TUBING
DG	DECOMPOSED GRANITE
DN	DIAMETER NOMINAL
DVA	DRIP VALVE ASSEMBLY

E

EC	EROSION CONTROL
ECTC	EROSION CONTROL TECHNOLOGY COUNCIL
Elect	ELECTRIC/ELECTRICAL
Elev	ELEVATION
ELL	ELBOW
ENCL	ENCLOSURE
EP	EDGE OF PAVEMENT
ES	EDGE OF SHOULDER
EST	END STRIP
ESTB	ESTABLISHMENT
ETW	EDGE OF TRAVELED WAY

F

F	FULL CIRCLE
F/P	FULL/PART CIRCLE
FCV	FLOW CONTROL VALVE
FERT	FERTILIZER
FG	FINISHED GRADE
FH	FLEXIBLE HOSE
FIPT	FEMALE IRON PIPE THREAD
FIS	FERTILIZER INJECTOR SYSTEM
FL	FLOW LINE
FR	FIBER ROLL
FS	FLOW SENSOR
FSC	FLOW SENSOR CABLE
FV	FLUSH VALVE

G

Galv	GALVANIZED
GARV	GARDEN VALVE
GARVA	GARDEN VALVE ASSEMBLY
GM	GRAVEL MULCH
GPH	GALLONS PER HOUR
GPM	GALLONS PER MINUTE
GSP	GALVANIZED STEEL PIPE
GV	GATE VALVE

H

H	HALF CIRCLE
HDPE	HIGH DENSITY POLYETHYLENE
HP	HORSEPOWER/HINGE POINT
HPL	HIGH PRESSURE LINE
Hwy	HIGHWAY

I

IC	IRRIGATION CONTROLLER
ICC	IRRIGATION CONTROLLER(S) IN CONTROLLER ENCLOSURE CABINET
ID	INSIDE DIAMETER
IFS	IRRIGATION FILTRATION SYSTEM
IPS	IRON PIPE SIZE
IPT	IRON PIPE THREAD
Irr	IRRIGATION

L

L	LENGTH

M

Max	MAXIMUM
MBGR	METAL BEAM GUARD RAILING
MCV	MANUAL CONTROL VALVE
MIC	MASTER IRRIGATION CONTROLLER
Min	MINIMUM
MIPT	MALE IRON PIPE THREAD
Misc	MISCELLANEOUS
Mtl	MATERIAL
MVP	MAINTENANCE VEHICLE PULLOUT

N

NCN	NO COMMON NAME
NL	NOZZLE LINE
No.	NUMBER
NPT	NATIONAL PIPE THREAD

O

O/C	ON CENTER
OD	OUTSIDE DIAMETER
OL	OVERLAP

P

P	PART CIRCLE
PB	PULL BOX
PCC	PORTLAND CEMENT CONCRETE
PE	POLYETHYLENE
Pkt	PACKET
PL	PLASTIC
PLS	PURE LIVE SEED
PLT	PLANT/PLANTING
PLT ESTB	PLANT ESTABLISHMENT
PM	POST MILE
PR	PRESSURE RATED
PRLV	PRESSURE RELIEF VALVE
PRV	PRESSURE REGULATING VALVE
PVC	POLYVINYL CHLORIDE
Pvmt	PAVEMENT

Q

Q	QUARTER CIRCLE
QCV	QUICK COUPLING VALVE

R

R	RADIUS
RCP	REINFORCED CONCRETE PIPE
RCV	REMOTE CONTROL VALVE
RCVM	REMOTE CONTROL VALVE (MASTER)
RCVMF	REMOTE CONTROL VALVE (MASTER) W/FLOW SENSOR
RCVP	REMOTE CONTROL VALVE W/PRESSURE REGULATOR
RCW	RECYCLED WATER
RECP	ROLLED EROSION CONTROL PRODUCT
REQ	REQUIRED
RICS	REMOTE IRRIGATION CONTROL SYSTEM
R/W	RIGHT OF WAY

S

S	SLIP
SCH	SCHEDULE
SF	STATE-FURNISHED
Shld	SHOULDER
Sq	SQUARE
SST	SIDE STRIP
Sta	STATION
Std	STANDARD
SW	SIDEWALK/SOUND WALL

T

T	THIRD CIRCLE/THREAD
TLS	TRUCK LOADING STANDPIPE
TQ	THREE QUARTER CIRCLE
TRM	TURF REINFORCEMENT MAT
TT	TWO-THIRDS CIRCLE
TWSA	TREE WELL SPRINKLER ASSEMBLY
Typ	TYPICAL

U

UG	UNDERGROUND

W

W	WIDTH
W/	WITH
WM	WATER METER
WS	WYE STRAINER
WSA	WYE STRAINER ASSEMBLY
WSP	WELDED STEEL PIPE
WWM	WELDED WIRE MESH

NOTE:
For additional abbreviations, see Standard Plans A10A and A10B.

STATE OF CALIFORNIA
DEPARTMENT OF TRANSPORTATION

LANDSCAPE AND EROSION CONTROL ABBREVIATIONS

NO SCALE

RSP H1 DATED JULY 19, 2013 SUPERSEDES STANDARD PLAN H1
DATED MAY 20, 2011 - PAGE 218 OF THE STANDARD PLANS BOOK DATED 2010.

REVISED STANDARD PLAN RSP H1

2010 REVISED STANDARD PLAN RSP H1

6-28-13

Dist	COUNTY	ROUTE	POST MILES TOTAL PROJECT	SHEET No.	TOTAL SHEETS
04	CC/Mrn	580	5.0/7.8, 0.0/3.3	438	579

LICENSED LANDSCAPE ARCHITECT

July 15, 2016
PLANS APPROVAL DATE

LICENSED LANDSCAPE ARCHITECT
Michael V. Ferraro 3869
Signature
9-30-17
Renewal Date
Date
STATE OF CALIFORNIA

THE STATE OF CALIFORNIA OR ITS OFFICERS OR AGENTS SHALL NOT BE RESPONSIBLE FOR THE ACCURACY OR COMPLETENESS OF SCANNED COPIES OF THIS PLAN SHEET.

TO ACCOMPANY PLANS DATED _____

EXISTING	NEW	ITEM DESCRIPTION
		WATER METER (WM)
		BACKFLOW PREVENTER ASSEMBLY (BPA)
		BACKFLOW PREVENTER ENCLOSURE (BPE)
		BOOSTER PUMP (BP)
		TRUCK LOADING STANDPIPE (TLS)
	FS	FLOW SENSOR (FS)
		MASTER IRRIGATION CONTROLLER (MIC)
		AUXILIARY IRRIGATION CONTROLLER (AIC)
		IRRIGATION CONTROLLER (IC) IRRIGATION CONTROLLER (IC) (BATTERY) IRRIGATION CONTROLLER (IC) (SOLAR) IRRIGATION CONTROLLER (IC) (TWO WIRE)
		IRRIGATION CONTROLLER(S) IN CONTROLLER ENCLOSURE CABINET (ICC)
acc	ACC	ARMOR-CLAD CONDUCTORS (ACC)
		CONTROL AND NEUTRAL CONDUCTORS (CNC)
		IRRIGATION CONDUIT
		IRRIGATION SLEEVE
dip	DIP	DUCTILE IRON PIPE (SUPPLY LINE) (MAIN) (DIP)
		GALVANIZED STEEL PIPE (SUPPLY LINE) (MAIN) (GSP)
		GALVANIZED STEEL PIPE (SUPPLY LINE) (LATERAL) (GSP)
		PLASTIC PIPE (SUPPLY LINE) (MAIN)
		PLASTIC PIPE (SUPPLY LINE) (LATERAL)
cp	CP	COPPER PIPE (SUPPLY LINE)
dit	DIT	DRIP IRRIGATION TUBING
		REMOTE CONTROL VALVE (RCV) REMOTE CONTROL VALVE (MASTER) (RCVM) REMOTE CONTROL VALVE (MASTER) W/FLOW METER (RCVMF)
	P	REMOTE CONTROL VALVE W/PRESSURE REGULATOR (RCVP)
		EXISTING MANUAL CONTROL VALVE (MCV)
	V	DRIP VALVE ASSEMBLY (DVA)
	Y	WYE STRAINER ASSEMBLY (WSA)

EXISTING	NEW	ITEM DESCRIPTION
		GATE VALVE (GV)
		BALL VALVE (BV)
		QUICK COUPLING VALVE (QCV)
		CAM COUPLER ASSEMBLY (CCA)
		GARDEN VALVE ASSEMBLY (GARVA)
		PRESSURE REGULATING VALVE (PRV)
		PRESSURE RELIEF VALVE (PRLV)
		FLOW CONTROL VALVE (FCV)
		COMBINATION AIR RELEASE VALVE (CARV)
		CHECK VALVE (CV)
		FLUSH VALVE (FV)
		EXISTING NOZZLE LINE W/TURNING UNION
		EXISTING IRRIGATION SYSTEM
		EXISTING IRRIGATION SYSTEM TO BE REMOVED
		CHAIN LINK GATE
		QUICK COUPLING VALVE W/SPRINKLER PROTECTOR
3	3	SPRINKLER W/SPRINKLER PROTECTOR
	C	CONNECT TO EXISTING SYSTEM
		CAP
		CAP EXISTING
	\\\FR\\\	FIBER ROLL
	\\\CS\\\	COMPOST SOCK

RCV SIZE
IRRIGATION CONTROLLER
CONTROLLER STATION
VALVE IN PARALLEL (IF APPLICABLE)
GPM
QUANTITY OF SPRINKLERS (WHEN SHOWN)

* 2½"-A-2b-40-60

VALVE CODE

* VALVE CODES FOR EXISTING VALVES ARE SHOWN IN A DASHED ENCLOSURE.

STATE OF CALIFORNIA
DEPARTMENT OF TRANSPORTATION

LANDSCAPE AND EROSION CONTROL SYMBOLS

NO SCALE

RSP H2 DATED JULY 15, 2016 SUPERSEDES RSP H2 DATED NOVEMBER 15, 2013 AND RSP H2 DATED JULY 19, 2013 AND STANDARD PLAN H2 DATED MAY 20, 2011 - PAGE 219 OF THE STANDARD PLANS BOOK DATED 2010.

REVISED STANDARD PLAN RSP H2

2010 REVISED STANDARD PLAN RSP H2

5-24-16

Dist	COUNTY	ROUTE	POST MILES TOTAL PROJECT	SHEET No.	TOTAL SHEETS
04	CC/Mrn	580	5.0/7.8, 0.0/3.3	439	579

LICENSED LANDSCAPE ARCHITECT

July 19, 2013
PLANS APPROVAL DATE

LICENSED LANDSCAPE ARCHITECT
Gregory A. Belzer
REGISTERED PROFESSIONAL ENGINEER
2-28-15
RENEWAL DATE
7-19-13
DATE
STATE OF CALIFORNIA

THE STATE OF CALIFORNIA OR ITS OFFICERS OR AGENTS SHALL NOT BE RESPONSIBLE FOR THE ACCURACY OR COMPLETENESS OF SCANNED COPIES OF THIS PLAN SHEET.

TO ACCOMPANY PLANS DATED _____

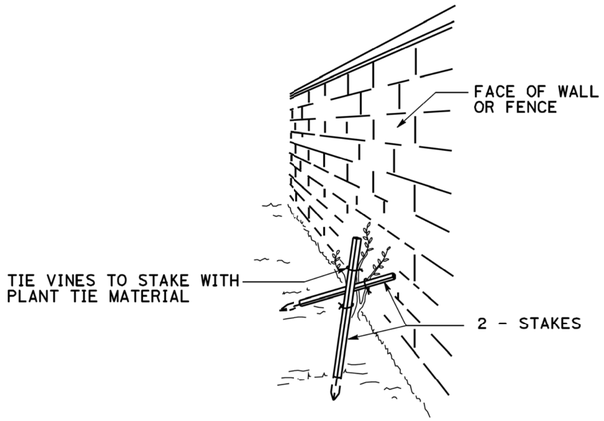

PERSPECTIVE
VINE STAKING

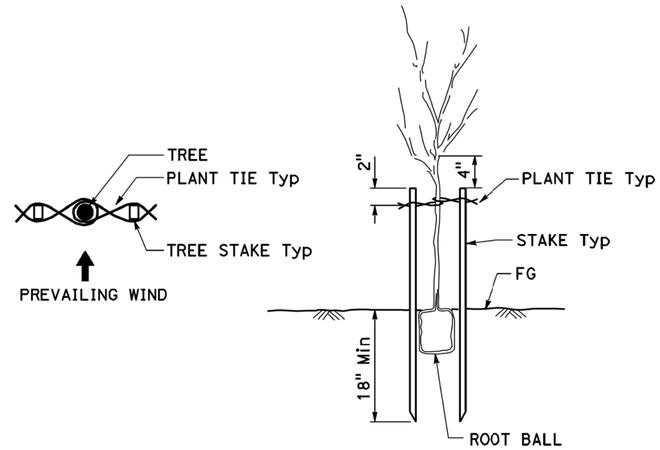

TREE STAKING

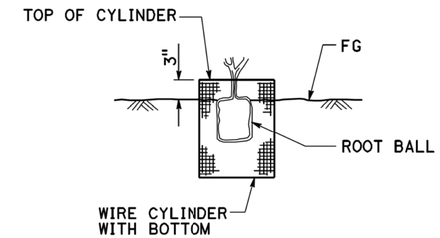

SECTION
ROOT PROTECTOR

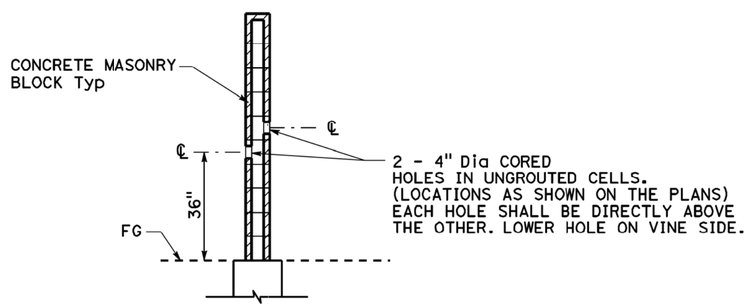

SECTION
CORE HOLE (VINE)

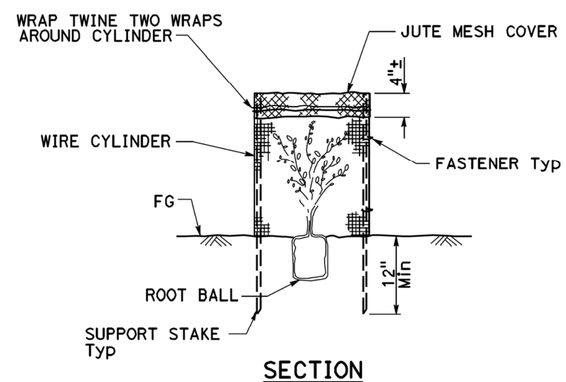

SECTION
FOLIAGE PROTECTOR

STATE OF CALIFORNIA
DEPARTMENT OF TRANSPORTATION

LANDSCAPE DETAILS

NO SCALE

RSP H4 DATED JULY 19, 2013 SUPERSEDES STANDARD PLAN H4
DATED MAY 20, 2011 - PAGE 221 OF THE STANDARD PLANS BOOK DATED 2010.

REVISED STANDARD PLAN RSP H4

2010 REVISED STANDARD PLAN RSP H4

6-28-13

Dist	COUNTY	ROUTE	POST MILES TOTAL PROJECT	SHEET No.	TOTAL SHEETS
04	CC/Mrn	580	5.0/7.8, 0.0/3.3	440	579

LICENSED LANDSCAPE ARCHITECT

July 15, 2016
PLANS APPROVAL DATE

THE STATE OF CALIFORNIA OR ITS OFFICERS OR AGENTS SHALL NOT BE RESPONSIBLE FOR THE ACCURACY OR COMPLETENESS OF SCANNED COPIES OF THIS PLAN SHEET.

LICENSED LANDSCAPE ARCHITECT
Michael V. Ferrara 3859
Signature
9-30-17
Renewal Date
Date
STATE OF CALIFORNIA

TO ACCOMPANY PLANS DATED _____

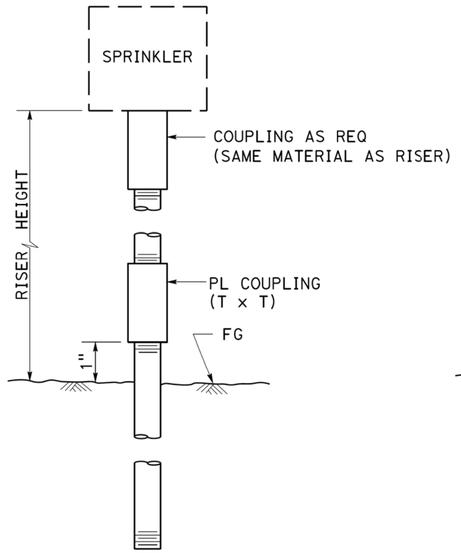

ELEVATION

RISER TYPE I

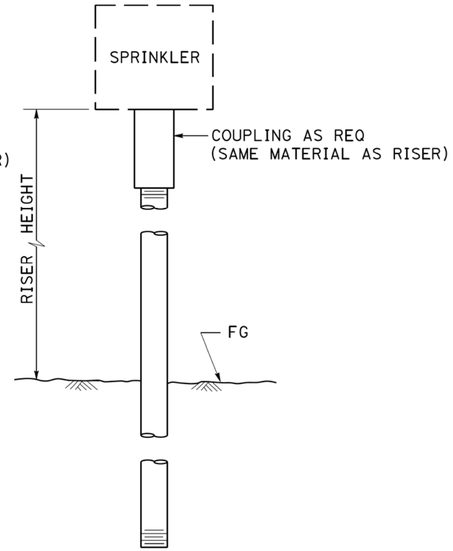

ELEVATION

RISER TYPE II

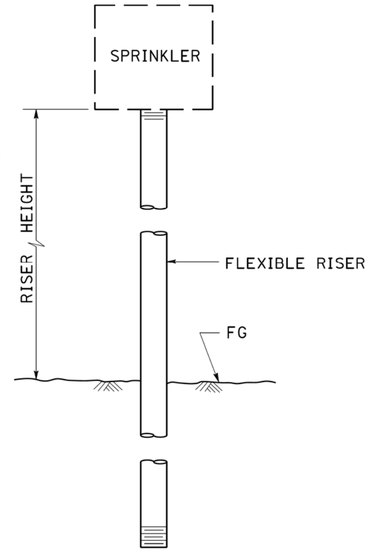

ELEVATION

RISER TYPE III

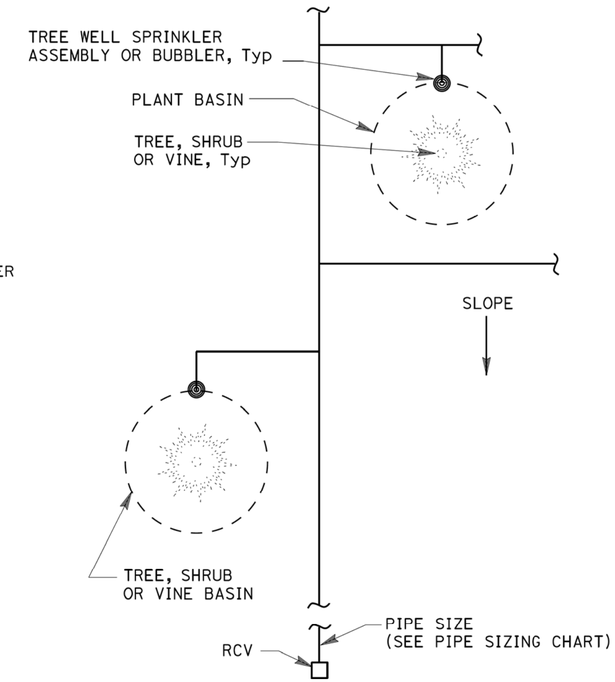

PLAN

NOTES:

1. Install tree well sprinkler assembly on up-hill side of plant when on slope.
2. Install bubbler within basin.

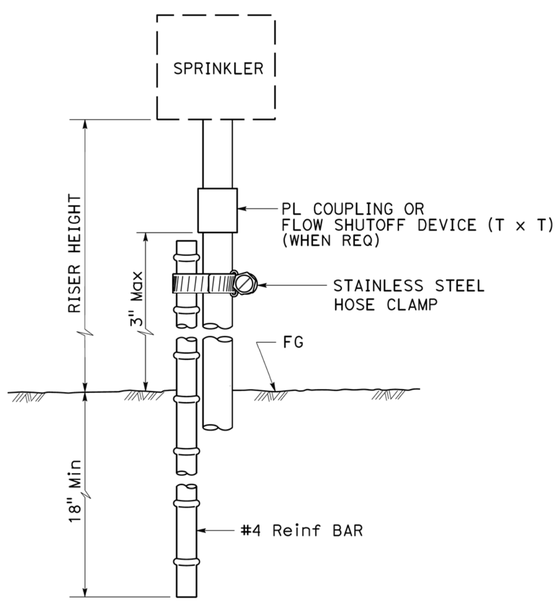

ELEVATION

RISER TYPE IV

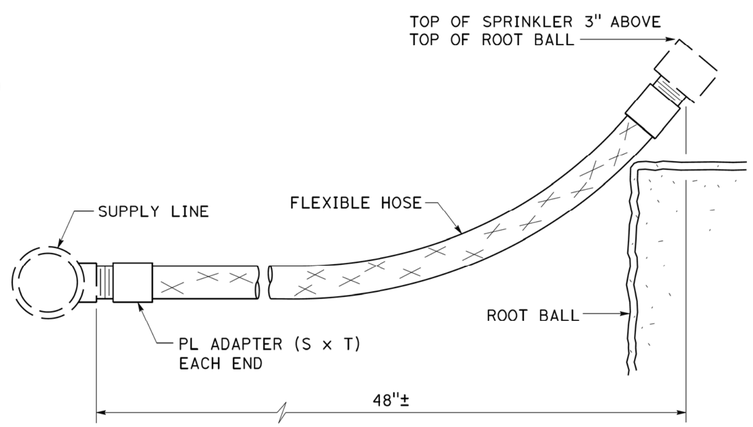

ELEVATION

RISER TYPE V

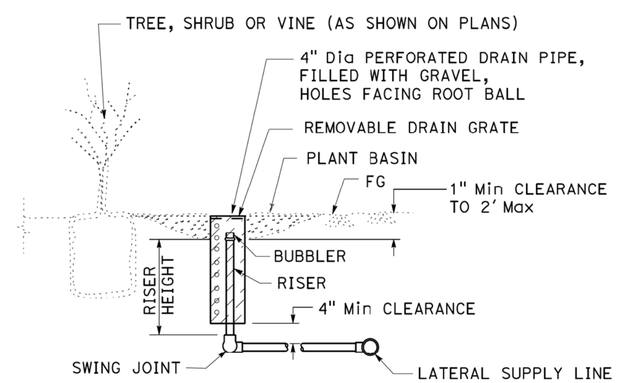

SECTION

TREE WELL SPRINKLER ASSEMBLY

STATE OF CALIFORNIA
DEPARTMENT OF TRANSPORTATION

LANDSCAPE DETAILS
(RISER SPRINKLER ASSEMBLY)

NO SCALE

RSP H5 DATED JULY 15, 2016 SUPERSEDES RSP H5 DATED JULY 19, 2013 AND STANDARD PLAN H5 DATED MAY 20, 2011 - PAGE 222 OF THE STANDARD PLANS BOOK DATED 2010.

REVISED STANDARD PLAN RSP H5

2010 REVISED STANDARD PLAN RSP H5

6-22-16

Dist	COUNTY	ROUTE	POST MILES TOTAL PROJECT	SHEET No.	TOTAL SHEETS
04	CC/Mrn	580	5.0/7.8, 0.0/3.3	441	579

LICENSED LANDSCAPE ARCHITECT

July 15, 2016
PLANS APPROVAL DATE

LICENSED LANDSCAPE ARCHITECT
Michael V. Ferraro 3859
9-30-17
Renewal Date
Date
STATE OF CALIFORNIA

THE STATE OF CALIFORNIA OR ITS OFFICERS OR AGENTS SHALL NOT BE RESPONSIBLE FOR THE ACCURACY OR COMPLETENESS OF SCANNED COPIES OF THIS PLAN SHEET.

TO ACCOMPANY PLANS DATED _____

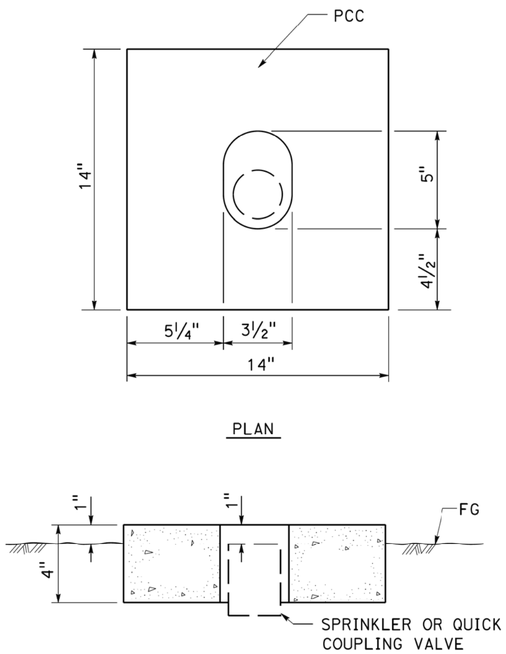

SECTION
SPRINKLER PROTECTOR TYPE I

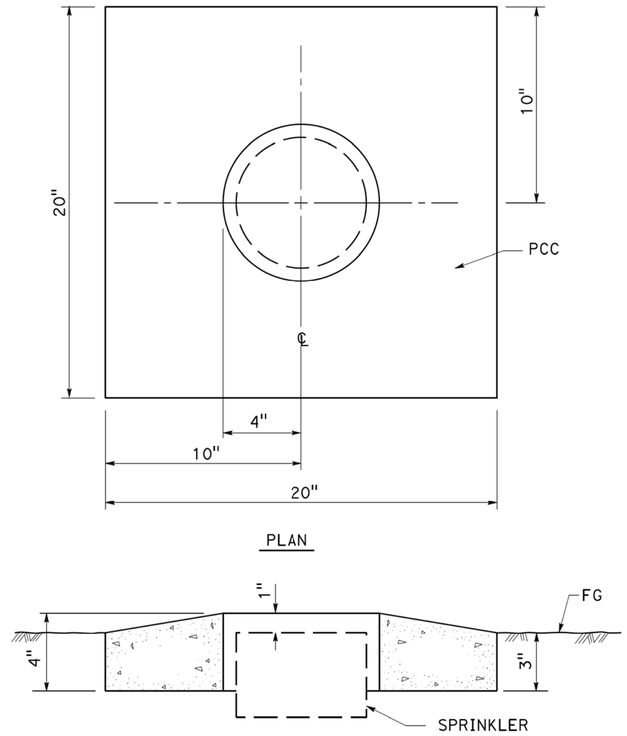

SECTION
SPRINKLER PROTECTOR TYPE II

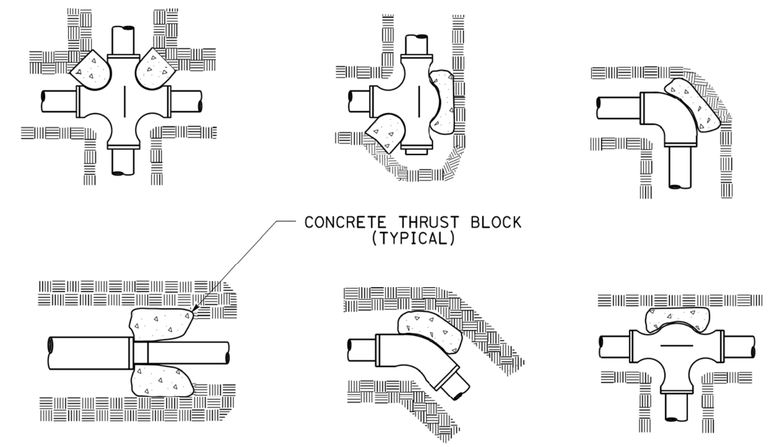

TYPICAL THRUST BLOCKS

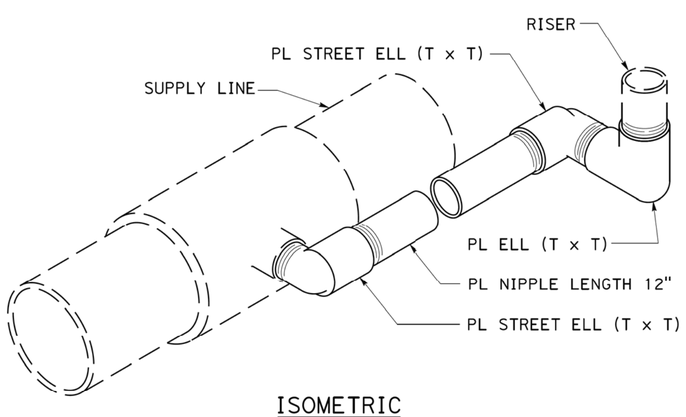

ISOMETRIC
SWING JOINT TYPE I

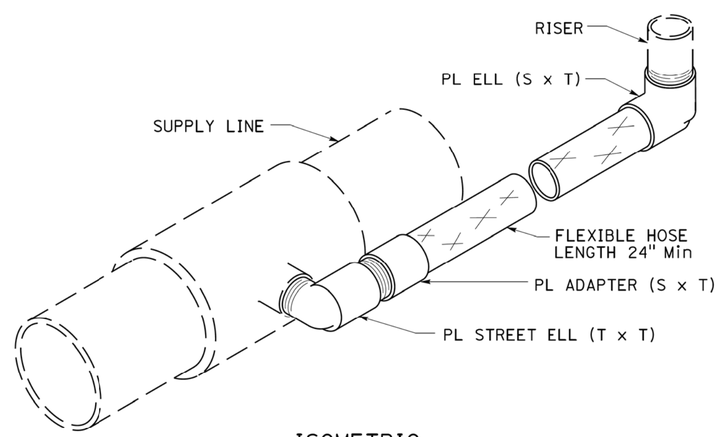

ISOMETRIC
SWING JOINT TYPE II

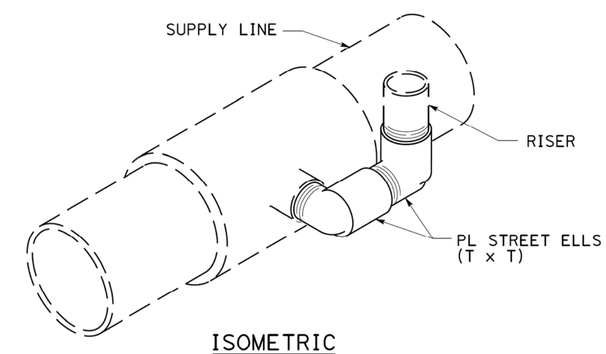

ISOMETRIC
SWING JOINT TYPE III

STATE OF CALIFORNIA
DEPARTMENT OF TRANSPORTATION

LANDSCAPE DETAILS (SWING JOINT AND PROTECTOR)

NO SCALE

RSP H6 DATED JULY 15, 2016 SUPERSEDES RSP H6 DATED JULY 19, 2013 AND STANDARD PLAN H6 DATED MAY 20, 2011 - PAGE 223 OF THE STANDARD PLANS BOOK DATED 2010.

REVISED STANDARD PLAN RSP H6

2010 REVISED STANDARD PLAN RSP H6

6-16-16

Dist	COUNTY	ROUTE	POST MILES TOTAL PROJECT	SHEET No.	TOTAL SHEETS
04	CC/Mrn	580	5.0/7.8, 0.0/3.3	442	579

LICENSED LANDSCAPE ARCHITECT

July 19, 2013
PLANS APPROVAL DATE

THE STATE OF CALIFORNIA OR ITS OFFICERS OR AGENTS SHALL NOT BE RESPONSIBLE FOR THE ACCURACY OR COMPLETENESS OF SCANNED COPIES OF THIS PLAN SHEET.

LICENSED LANDSCAPE ARCHITECT — Gregory A. Barber — Signature — 2-28-15 Renewal Date — 7-19-13 Date — STATE OF CALIFORNIA

TO ACCOMPANY PLANS DATED _____

2010 REVISED STANDARD PLAN RSP H7

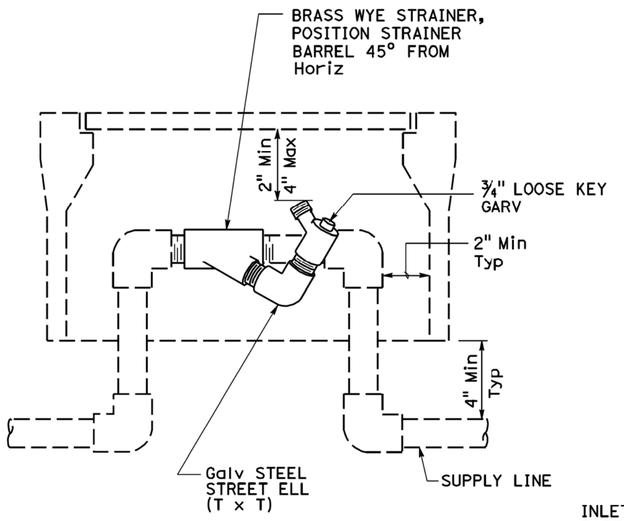

ELEVATION
WYE STRAINER ASSEMBLY

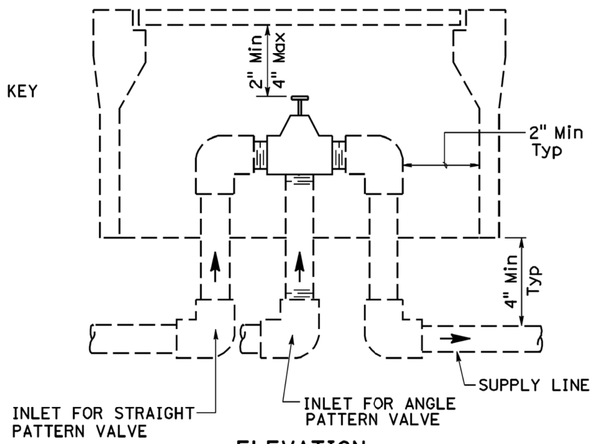

ELEVATION
VALVE

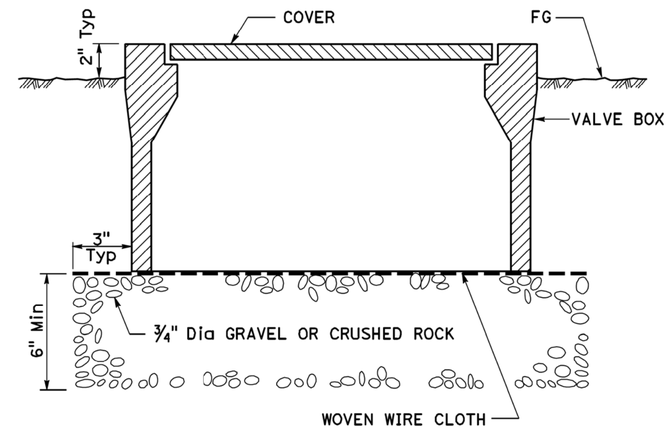

SECTION
VALVE BOX

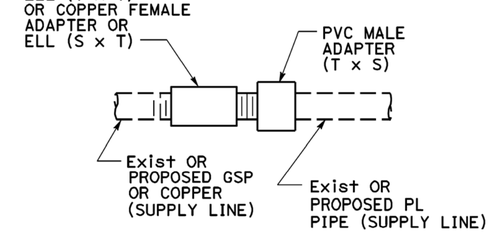

GALVANIZED OR COPPER PIPE CONNECTION TO PLASTIC PIPE

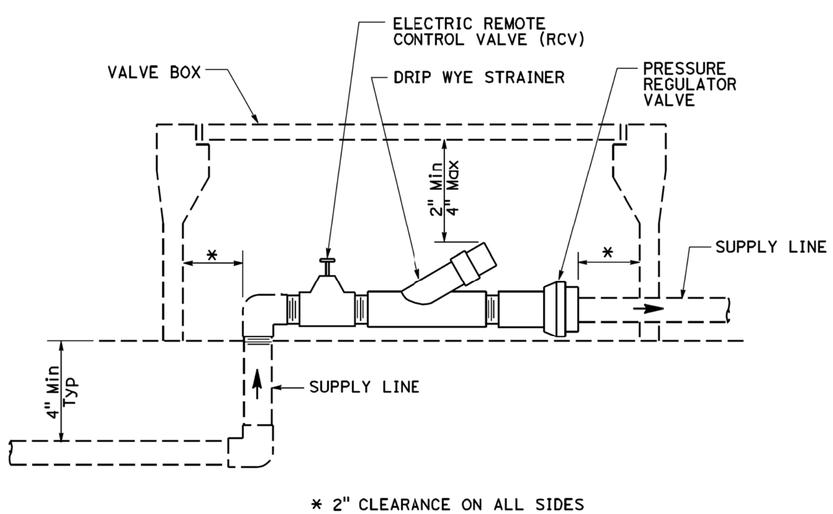

ELEVATION
DRIP VALVE ASSEMBLY

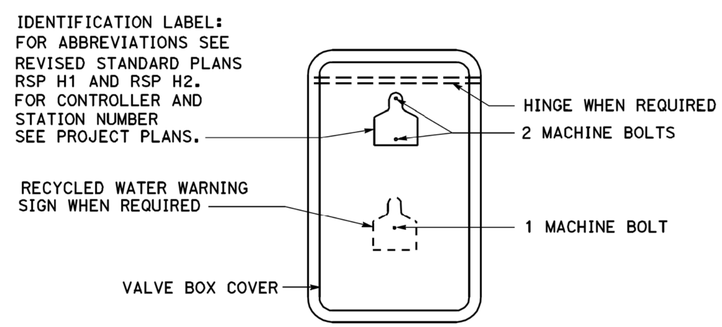

PLAN

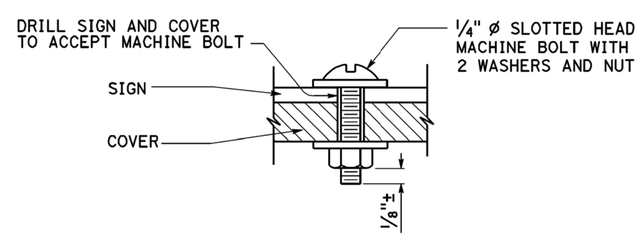

SECTION
VALVE BOX IDENTIFICATION

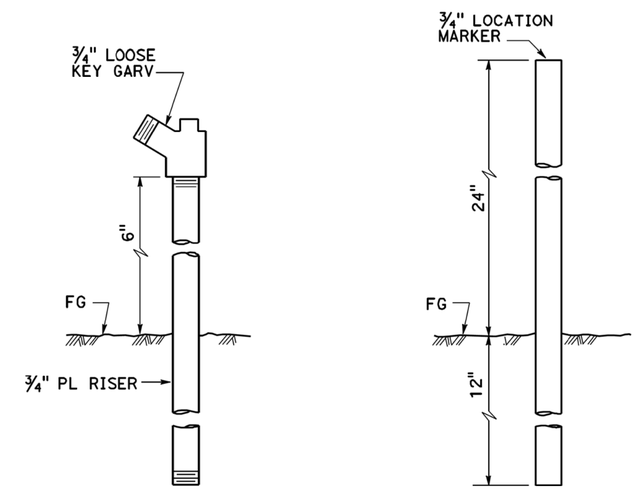

ELEVATION
GARDEN VALVE ASSEMBLY

ELEVATION
LOCATION MARKER

GARDEN VALVE ASSEMBLY

STATE OF CALIFORNIA
DEPARTMENT OF TRANSPORTATION

LANDSCAPE DETAILS

NO SCALE

RSP H7 DATED JULY 19, 2013 SUPERSEDES STANDARD PLAN H7 DATED MAY 20, 2011 - PAGE 224 OF THE STANDARD PLANS BOOK DATED 2010.

REVISED STANDARD PLAN RSP H7

6-20-13

Dist	COUNTY	ROUTE	POST MILES TOTAL PROJECT	SHEET No.	TOTAL SHEETS
04	CC/Mrn	580	5.0/7.8, 0.0/3.3	443	579

LICENSED LANDSCAPE ARCHITECT

October 30, 2015
PLANS APPROVAL DATE

THE STATE OF CALIFORNIA OR ITS OFFICERS OR AGENTS SHALL NOT BE RESPONSIBLE FOR THE ACCURACY OR COMPLETENESS OF SCANNED COPIES OF THIS PLAN SHEET.

LICENSED LANDSCAPE ARCHITECT — Victor V. Ferrara 3359 — Signature — 9-30-17 Renewal Date — Date — STATE OF CALIFORNIA

TO ACCOMPANY PLANS DATED _____

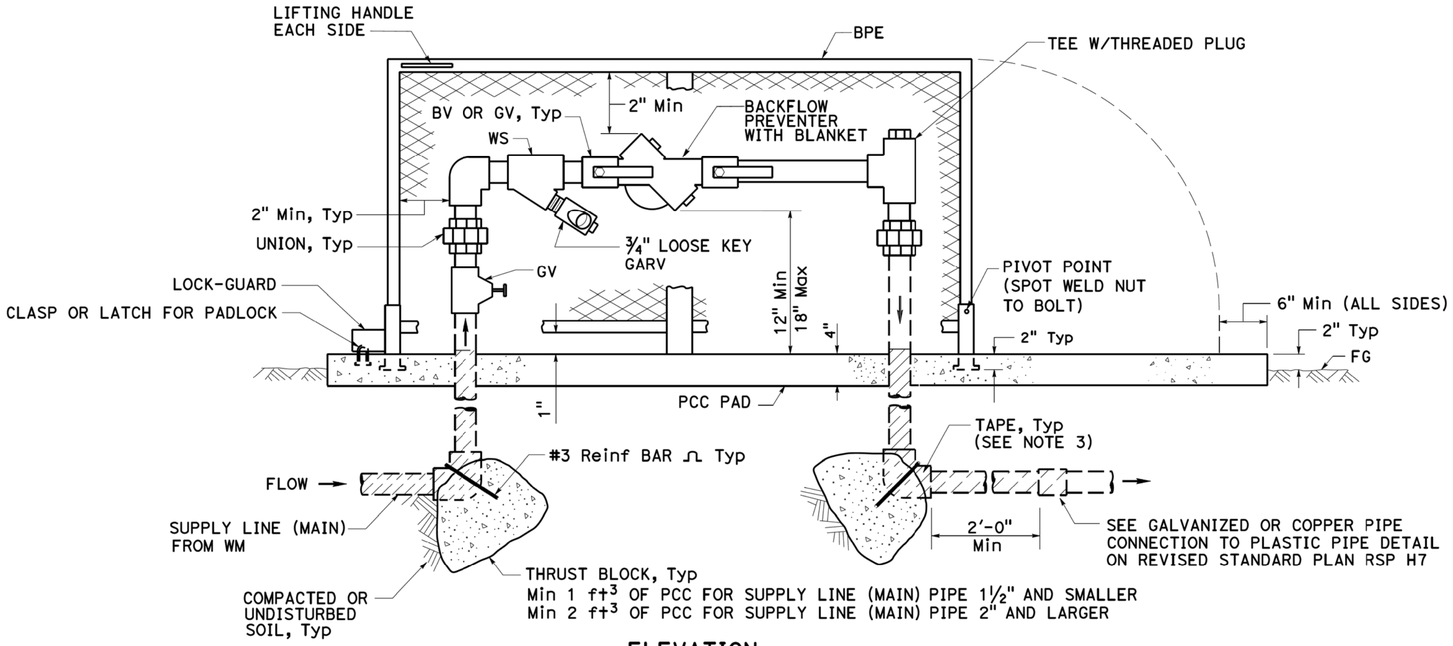

ELEVATION
BACKFLOW PREVENTER ASSEMBLY
IN ONE PIECE ENCLOSURE

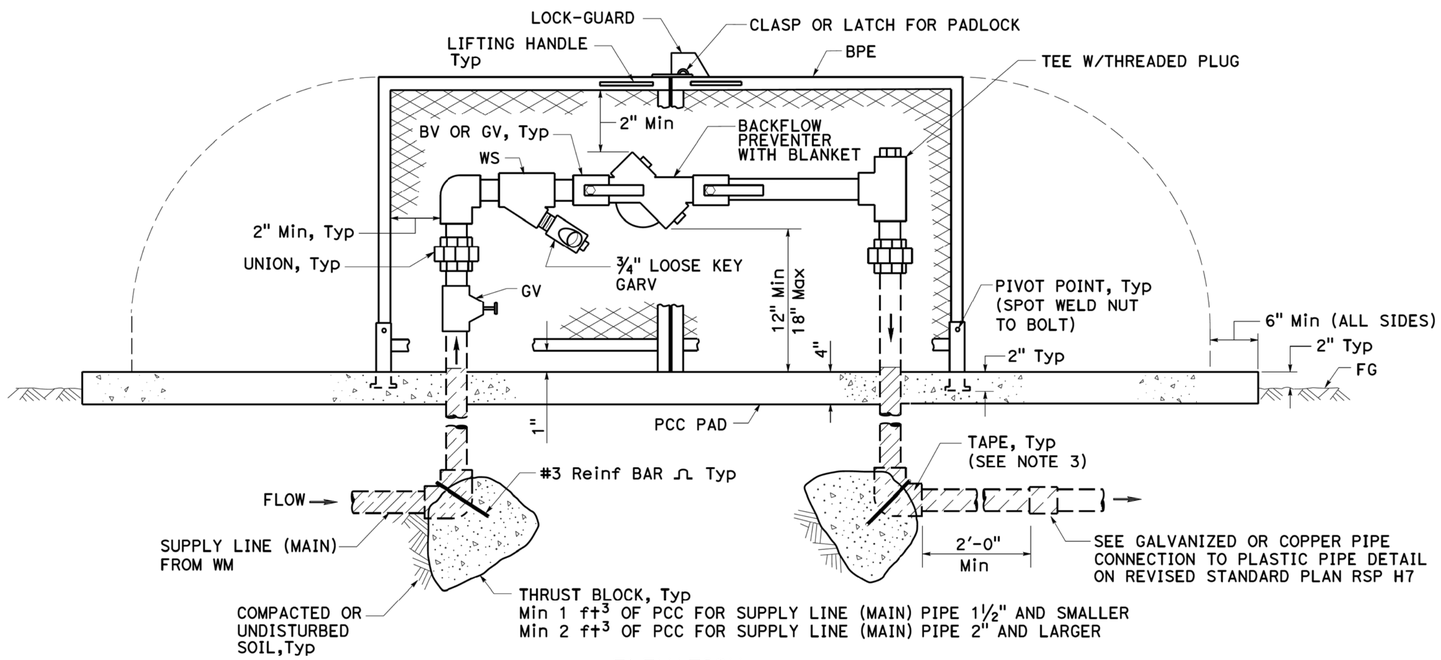

ELEVATION
BACKFLOW PREVENTER ASSEMBLY
IN TWO PIECE ENCLOSURE

NOTES:

1. Wye strainer and fittings must be the same size as the backflow preventer shown on the plans.
2. Backflow preventer assembly manifold pipe must be the same pipe as the supply line (main) pipe to be installed from the water meter to the backflow preventer assembly.
3. All metal in contact with soil and Portland Cement Concrete must be wrapped with 2" wide plastic backed adhesive polyethylene tape 20 mil thick with ½" overlap.

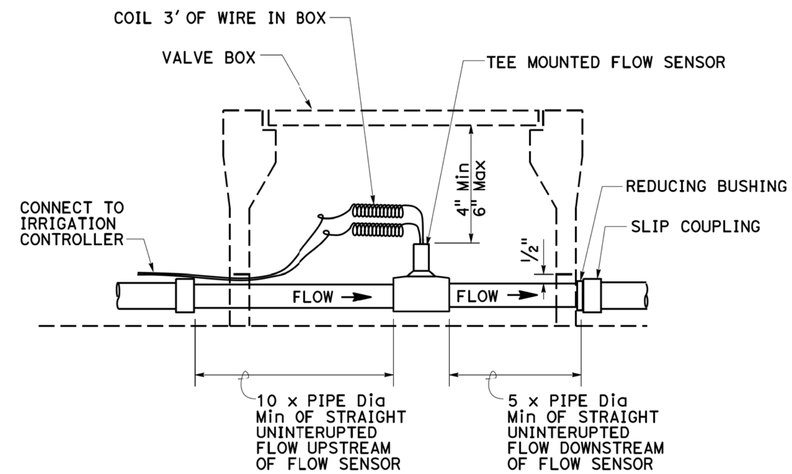

SECTION
FLOW SENSOR

STATE OF CALIFORNIA
DEPARTMENT OF TRANSPORTATION

LANDSCAPE DETAILS

NO SCALE

RSP H8 DATED OCTOBER 30, 2015 SUPERSEDES RSP H8 DATED JULY 19, 2013 AND STANDARD PLAN H8 DATED MAY 20, 2011 - PAGE 225 OF THE STANDARD PLANS BOOK DATED 2010.

REVISED STANDARD PLAN RSP H8

2010 REVISED STANDARD PLAN RSP H8

10-7-15

Dist	COUNTY	ROUTE	POST MILES TOTAL PROJECT	SHEET No.	TOTAL SHEETS
04	CC/Mrn	580	5.0/7.8, 0.0/3.3	444	579

LICENSED LANDSCAPE ARCHITECT

April 15, 2016
PLANS APPROVAL DATE

LICENSED LANDSCAPE ARCHITECT
Michael V. Ferraro 3889
Signature
9-30-17
Renewal Date
Date
STATE OF CALIFORNIA

THE STATE OF CALIFORNIA OR ITS OFFICERS OR AGENTS SHALL NOT BE RESPONSIBLE FOR THE ACCURACY OR COMPLETENESS OF SCANNED COPIES OF THIS PLAN SHEET.

TO ACCOMPANY PLANS DATED _____

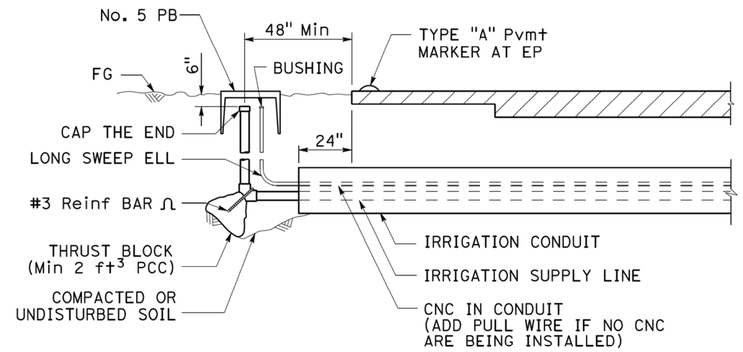

SECTION

IRRIGATION CONDUIT

UNDER TRAVELED WAY

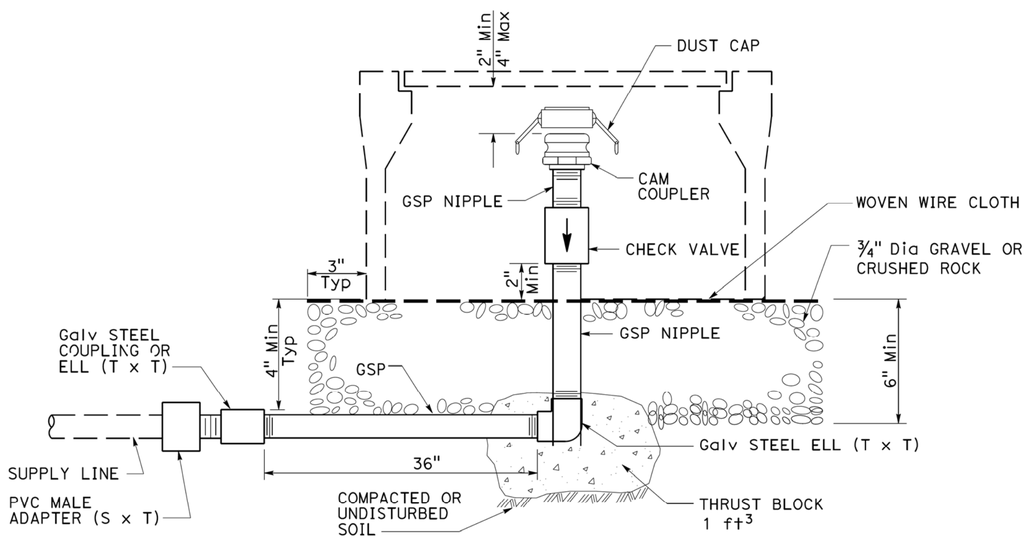

ELEVATION

CAM COUPLER ASSEMBLY

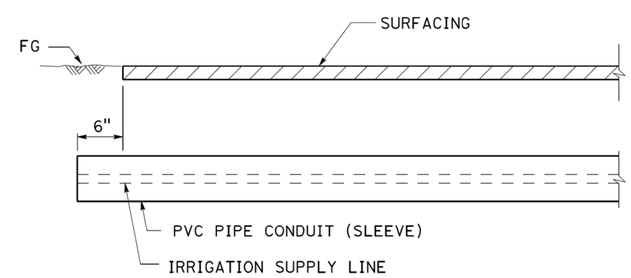

SECTION

PVC PIPE CONDUIT (SLEEVE)

UNDER SIDEWALKS, DRIVEWAYS AND PATHS

STATE OF CALIFORNIA
DEPARTMENT OF TRANSPORTATION

LANDSCAPE DETAILS

NO SCALE

RSP H9 DATED APRIL 15, 2016 SUPERSEDES RSP H9 DATED JULY 19, 2013 AND STANDARD PLAN H9 DATED MAY 20, 2011 - PAGE 226 OF THE STANDARD PLANS BOOK DATED 2010.

REVISED STANDARD PLAN RSP H9

2010 REVISED STANDARD PLAN RSP H9

3-24-16

Dist	COUNTY	ROUTE	POST MILES TOTAL PROJECT	SHEET No.	TOTAL SHEETS
04	CC/Mrn	580	5.0/7.8, 0.0/3.3	445	579

LICENSED LANDSCAPE ARCHITECT

July 19, 2013
PLANS APPROVAL DATE

THE STATE OF CALIFORNIA OR ITS OFFICERS OR AGENTS SHALL NOT BE RESPONSIBLE FOR THE ACCURACY OR COMPLETENESS OF SCANNED COPIES OF THIS PLAN SHEET.

LICENSED LANDSCAPE ARCHITECT — GREGORY A. BALZER — 2578 — Expiration Date 2-28-15 — Renewal Date 7-19-13 — Date — STATE OF CALIFORNIA

TO ACCOMPANY PLANS DATED _____

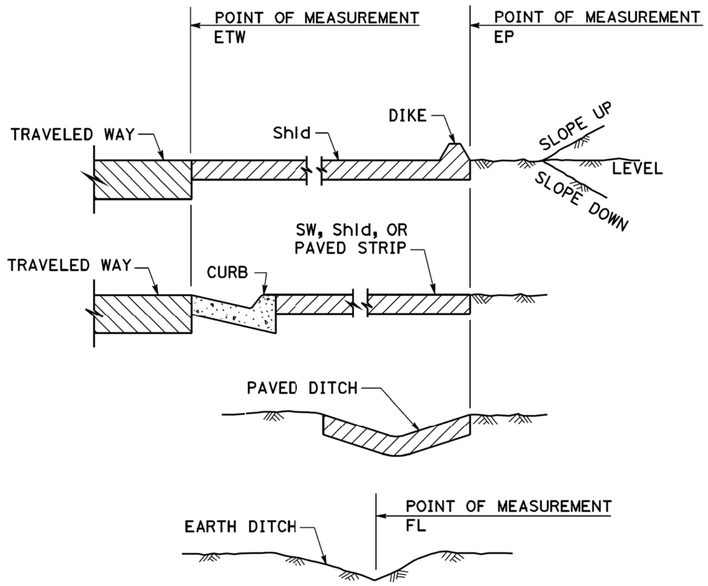

SECTION
POINTS OF MEASUREMENT

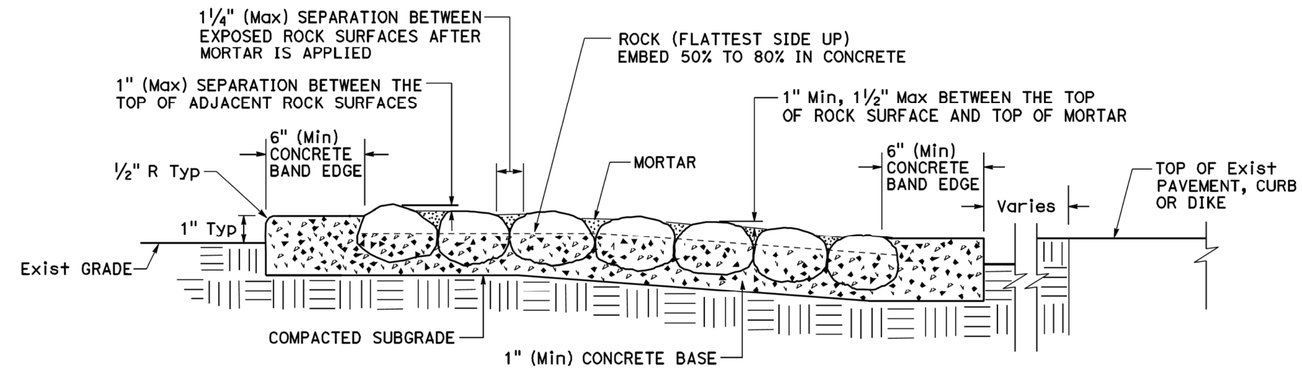

SECTION
ROCK BLANKET

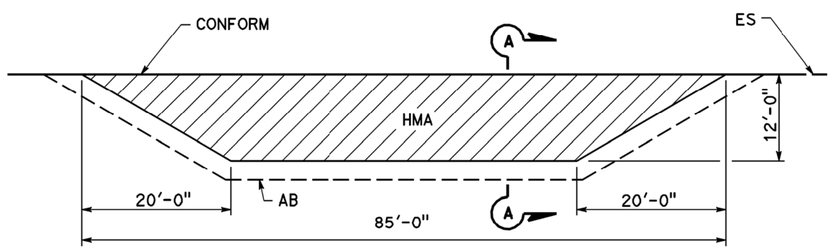

PLAN

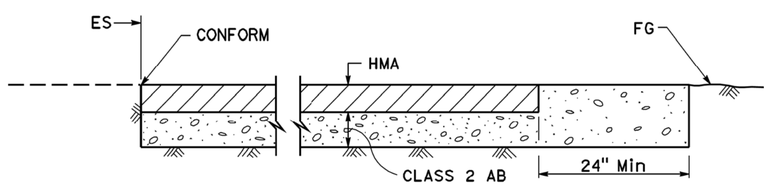

SECTION A-A
MAINTENANCE VEHICLE PULLOUT

STATE OF CALIFORNIA
DEPARTMENT OF TRANSPORTATION

LANDSCAPE DETAILS

NO SCALE

RSP H9A DATED JULY 19, 2013 SUPPLEMENTS THE STANDARD PLANS BOOK DATED 2010.

REVISED STANDARD PLAN RSP H9A

2010 REVISED STANDARD PLAN RSP H9A

6-21-13

Dist	COUNTY	ROUTE	POST MILES TOTAL PROJECT	SHEET No.	TOTAL SHEETS
04	CC/Mrn	580	5.0/7.8, 0.0/3.3	446	579

REGISTERED CIVIL ENGINEER

July 19, 2013
PLANS APPROVAL DATE

REGISTERED PROFESSIONAL ENGINEER Gurinderpal Bhullar No. C48815 Exp. 9-30-14 CIVIL STATE OF CALIFORNIA

THE STATE OF CALIFORNIA OR ITS OFFICERS OR AGENTS SHALL NOT BE RESPONSIBLE FOR THE ACCURACY OR COMPLETENESS OF SCANNED COPIES OF THIS PLAN SHEET.

TO ACCOMPANY PLANS DATED _____

TABLE 1

TAPER LENGTH CRITERIA AND CHANNELIZING DEVICE SPACING

SPEED (S)	MINIMUM TAPER LENGTH * FOR WIDTH OF OFFSET 12 FEET (W)				MAXIMUM CHANNELIZING DEVICE SPACING		
					X	Y	Z **
	TANGENT 2L	MERGING L	SHIFTING L/2	SHOULDER L/3	TAPER	TANGENT	CONFLICT
mph	ft	ft	ft	ft	ft	ft	ft
20	160	80	40	27	20	40	10
25	250	125	63	42	25	50	12
30	360	180	90	60	30	60	15
35	490	245	123	82	35	70	17
40	640	320	160	107	40	80	20
45	1080	540	270	180	45	90	22
50	1200	600	300	200	50	100	25
55	1320	660	330	220	55	110	27
60	1440	720	360	240	60	120	30
65	1560	780	390	260	65	130	32
70	1680	840	420	280	70	140	35

* - For other offsets, use the following merging taper length formula for L:
For speed of 40 mph or less, $L = WS^2/60$
For speed of 45 mph or more, $L = WS$

Where: L = Taper length in feet
W = Width of offset in feet
S = Posted speed limit, off-peak 85th-percentile speed prior to work starting, or the anticipated operating speed in mph

** - Use for taper and tangent sections where there are no pavement markings or where there is a conflict between existing pavement markings and channelizers (CA).

TABLE 2

LONGITUDINAL BUFFER SPACE AND FLAGGER STATION SPACING

SPEED *	Min D **	DOWNGRADE Min D ***		
		-3%	-6%	-9%
mph	ft	ft	ft	ft
20	115	116	120	126
25	155	158	165	173
30	200	205	215	227
35	250	257	271	287
40	305	315	333	354
45	360	378	400	427
50	425	446	474	507
55	495	520	553	593
60	570	598	638	686
65	645	682	728	785
70	730	771	825	891

* - Speed is posted speed limit, off-peak 85th-percentile speed prior to work starting, or the anticipated operating speed in mph

** - Longitudinal buffer space or flagger station spacing

*** - Use on sustained downgrade steeper than -3 percent and longer than 1 mile.

TABLE 3

ADVANCE WARNING SIGN SPACING

ROAD TYPE	DISTANCE BETWEEN SIGNS *		
	A	B	C
	ft	ft	ft
URBAN - 25 mph OR LESS	100	100	100
URBAN - MORE THAN 25 mph TO 40 mph	250	250	250
URBAN - MORE THAN 40 mph	350	350	350
RURAL	500	500	500
EXPRESSWAY / FREEWAY	1000	1500	2640

* - The distances are approximate, are intended for guidance purposes only, and should be applied with engineering judgment. These distances should be adjusted by the Engineer for field conditions, if necessary, by increasing or decreasing the recommmended distances.

STATE OF CALIFORNIA
DEPARTMENT OF TRANSPORTATION

TRAFFIC CONTROL SYSTEM TABLES FOR LANE AND RAMP CLOSURES

NO SCALE

RSP T9 DATED JULY 19, 2013 SUPERSEDES RSP T9 DATED APRIL 19, 2013 THAT SUPPLEMENTS THE STANDARD PLANS BOOK DATED 2010.

REVISED STANDARD PLAN RSP T9

2010 REVISED STANDARD PLAN RSP T9

4-30-13

Dist	COUNTY	ROUTE	POST MILES TOTAL PROJECT	SHEET No.	TOTAL SHEETS
04	CC/Mrn	580	5.0/7.8, 0.0/3.3	447	579

REGISTERED CIVIL ENGINEER

April 19, 2013
PLANS APPROVAL DATE

REGISTERED PROFESSIONAL ENGINEER Gurinderpal Bhullar No. C48815 Exp. 9-30-14 CIVIL STATE OF CALIFORNIA

THE STATE OF CALIFORNIA OR ITS OFFICERS OR AGENTS SHALL NOT BE RESPONSIBLE FOR THE ACCURACY OR COMPLETENESS OF SCANNED COPIES OF THIS PLAN SHEET.

TO ACCOMPANY PLANS DATED _____

NOTES:

See Revised Standard Plan RSP T9 for tables.

Use cone spacing X for taper segment, Y for tangent segment or Z for conflict situations, as approriate, per Table 1, unless X, Y, or Z cone spacing is shown on this sheet.

Unless otherwise specified in the special provisions, all temporary warning signs shall have black legend on fluorescent orange background.

California codes are designated by (CA). Otherwise, Federal (MUTCD) codes are shown.

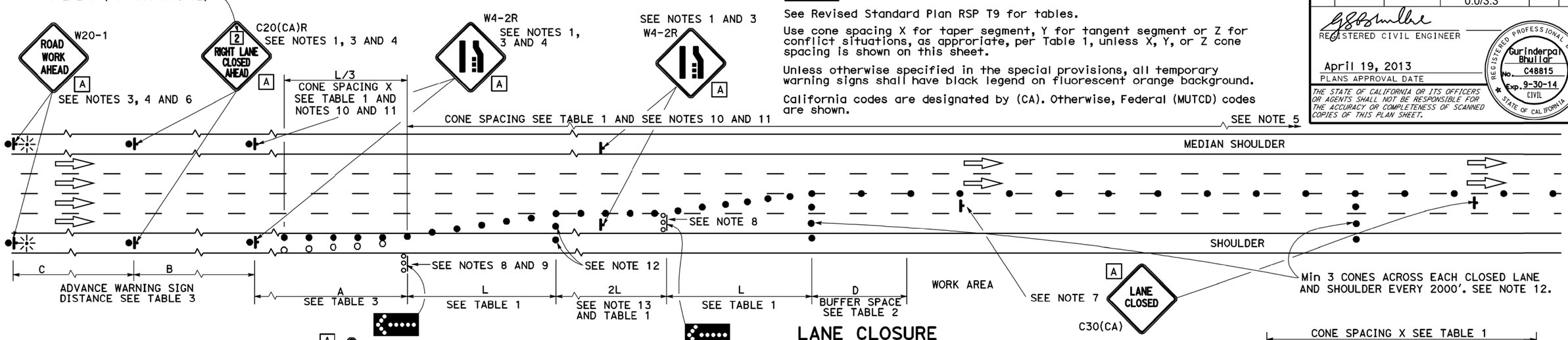

LANE CLOSURE

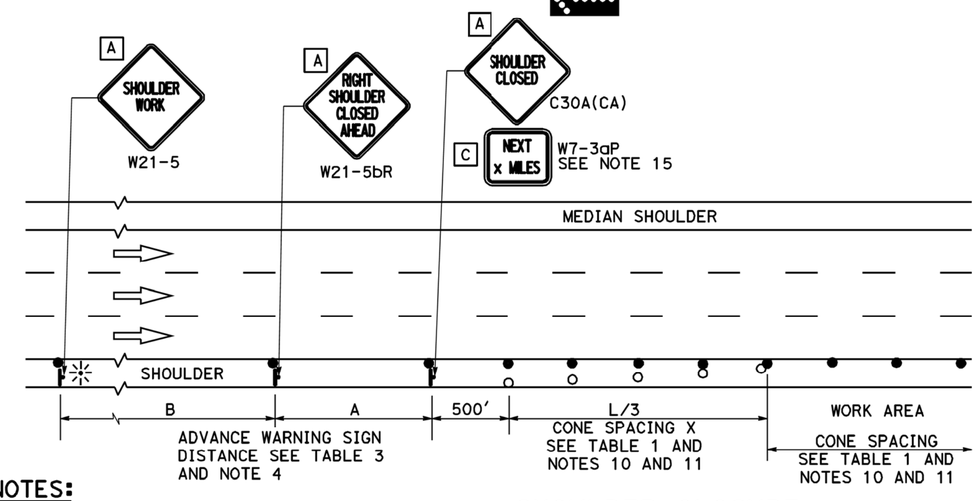

SHOULDER CLOSURE

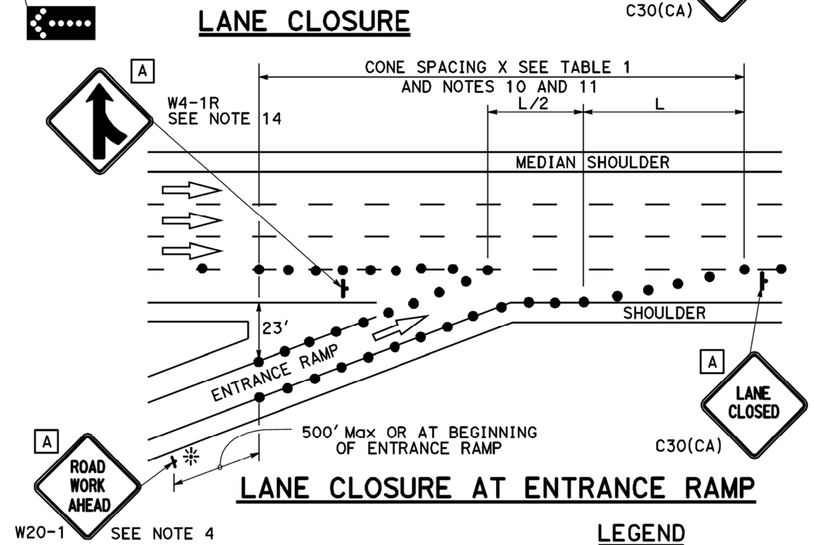

LANE CLOSURE AT ENTRANCE RAMP

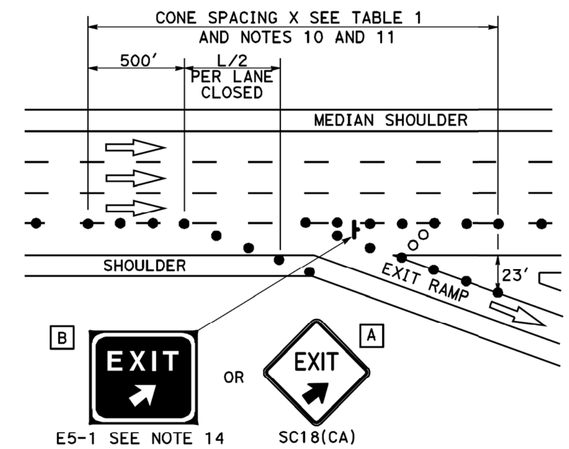

LANE CLOSURE AT EXIT RAMP

NOTES:

1. Median lane closures shall conform to the details as shown except that C20(CA)L and W4-2L signs shall be used.
2. At least one person shall be assigned to provide full time maintenance of traffic control devices for lane closures.
3. Duplicate sign installations are not required:
   a) On opposite shoulder if at least one-half of the available lanes remain open to traffic.
   b) In the median if the width of the median shoulder is less than 8' and the outside lanes are to be closed.
4. Each advance warning sign on each side of the roadway shall be equipped with at least two flags for daytime closure. Each flag shall be at least 16" x 16" in size and shall be orange or fluorescent red-orange in color. Flashing beacons shall be placed at the locations indicated for lane closure during hours of darkness.
5. A G20-2 "END ROAD WORK" sign, with minimum size of 48" x 24" as appropriate, shall be placed at the end of the lane closure unless the end of work area is obvious or ends within a larger project's limits.
6. If the W20-1 sign would follow within 2000' of a stationary W20-1 or G20-1 "ROAD WORK NEXT _____ MILES", use a C20(CA) sign for the first advance warning sign.
7. Place a C30(CA) sign every 2000' throughout length of lane closure.
8. One flashing arrow sign for each lane closed. The flashing arrow signs shall be Type I.
9. A minimum 1500' of sight distance shall be provided where possible for vehicles approaching the first flashing arrow sign. Lane closures shall not begin at top of crest vertical curve or on a horizontal curve.
10. All cones used for lane closures during the hours of darkness shall be fitted with retroreflective bands (or sleeves) as specified in the specifications.
11. Portable delineators, placed at one-half the spacing indicated for traffic cones may be used instead of cones for daytime closures only.
12. Unless otherwise specified in the special provisions, a minimum of 3 cones shall be placed transversely across each closed lane and shoulder at each location where a taper across a traffic lane ends and every 2000' as shown on the "Lane Closure" detail. Two Type II barricades may be used instead of the 3 cones. The transverse alignment of the cones or barricades on the closed shoulder may be shifted from the transverse alignment to provide access to the work.
13. Unless otherwise specified in the special provisions, the 2L tangent shown along lane lines shall be used between the L tapers required for each closed traffic lane.
14. Unless otherwise specified in the special provisions, the E5-1 or SC18(CA) and W4-1 signs shall be used as shown.
15. A W7-3aP "NEXT___ MILES" plaque must be used if theshoulder closure extends beyond the distance that can be perceived by road users.

LEGEND

- ● TRAFFIC CONE
- ○ TRAFFIC CONE (OPTIONAL TAPER)
- TEMPORARY TRAFFIC CONTROL SIGN
- FLASHING ARROW SIGN (FAS)
- FAS SUPPORT OR TRAILER
- PORTABLE FLASHING BEACON

SIGN PANEL SIZE (Min)

A	48" x 48"
B	72" x 60"
C	36" x 30"

STATE OF CALIFORNIA
DEPARTMENT OF TRANSPORTATION

TRAFFIC CONTROL SYSTEM FOR LANE CLOSURE ON FREEWAYS AND EXPRESSWAYS

NO SCALE

RSP T10 DATED APRIL 19, 2013 SUPERSEDES STANDARD PLAN T10 DATED MAY 20, 2011 - PAGE 237 OF THE STANDARD PLANS BOOK DATED 2010.

REVISED STANDARD PLAN RSP T10

2010 REVISED STANDARD PLAN RSP T10

12-18-12

TO ACCOMPANY PLANS DATED _____

Dist	COUNTY	ROUTE	POST MILES TOTAL PROJECT	SHEET No.	TOTAL SHEETS
04	CC/Mrn	580	5.0/7.8, 0.0/3.3	448	579

REGISTERED CIVIL ENGINEER

April 19, 2013
PLANS APPROVAL DATE

REGISTERED PROFESSIONAL ENGINEER Gurinderpal Bhullar No. C48815 Exp. 9-30-14 CIVIL STATE OF CALIFORNIA

THE STATE OF CALIFORNIA OR ITS OFFICERS OR AGENTS SHALL NOT BE RESPONSIBLE FOR THE ACCURACY OR COMPLETENESS OF SCANNED COPIES OF THIS PLAN SHEET.

NOTES: See Revised Standard Plan RSP T9 for tables.

Use cone spacing X for taper segment, Y for tangent segment or Z for conflict situations, as approriate, per Table 1, unless X, Y, or Z cone spacing is shown on this sheet.

Unless otherwise specified in the special provisions, all temporary warning signs shall have black legend on fluorescent orange background.

California codes are designated by (CA). Otherwise, Federal (MUTCD) codes are shown.

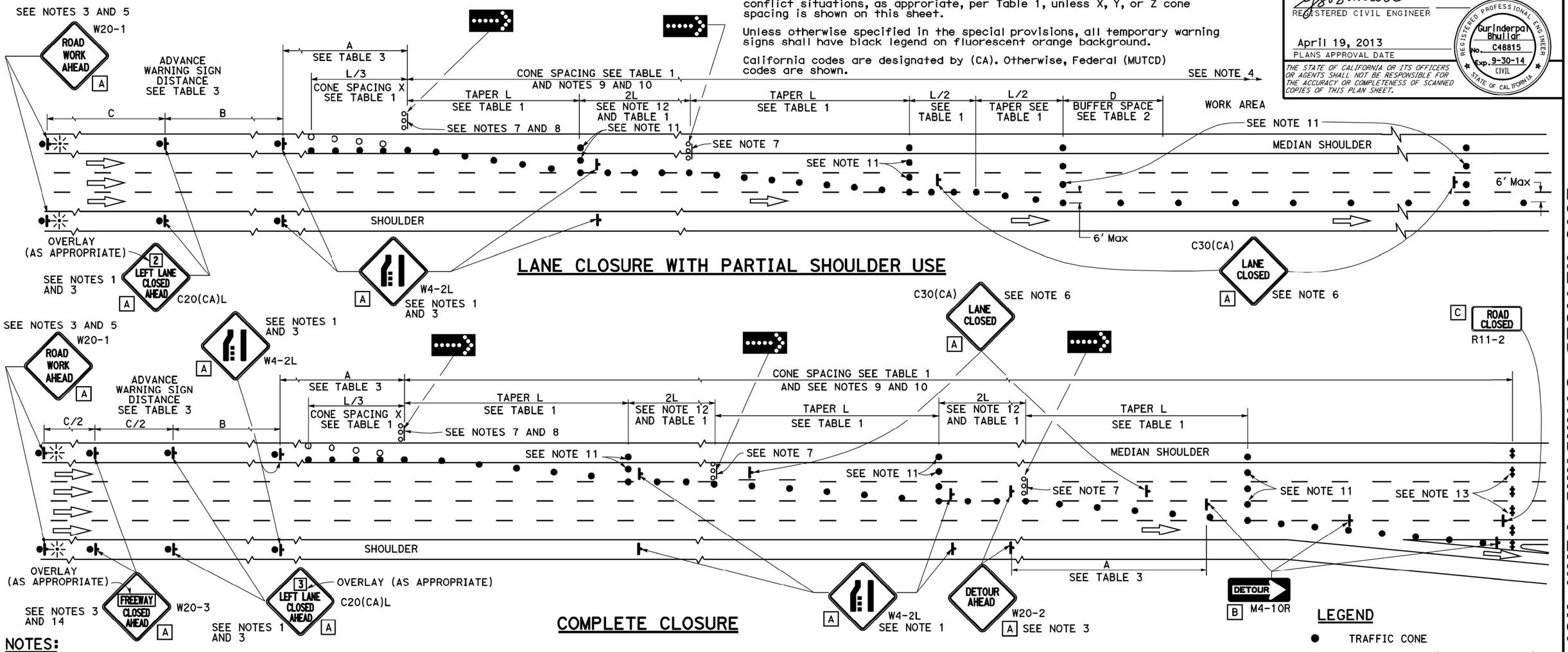

LANE CLOSURE WITH PARTIAL SHOULDER USE

COMPLETE CLOSURE

NOTES:

1. Lane closures on the right side using partial median shoulder as a traffic lane shall conform to the details as shown except that C20(CA)R and W4-2R signs shall be used.
2. At least one person shall be assigned to provide full time maintenance of traffic control devices for lane closures.
3. Each advance warning sign on each side of the roadway shall be equipped with at least two flags for daytime closure. Each flag shall be at least 16" X 16" in size and shall be orange or fluorescent red-orange in color. Flashing beacons shall be placed at the locations indicated for lane closure during hours of darkness.
4. A G20-2 "END ROAD WORK" sign, with minimum size of 48" x 24" as appropriate, shall be placed at the end of the lane closure unless the end of work area is obvious or ends within a larger project's limits.
5. If the W20-1 sign would follow within 2000' of a stationary W20-1 or G20-1 "ROAD WORK NEXT ___ MILES", use a C20(CA) sign for the first advance warning sign.
6. Place a C30(CA) sign every 2000' throughout length of lane closure.
7. One flashing arrow sign for each lane closed. The flashing arrow signs shall be Type I.
8. A minimum 1500' of sight distance shall be provided where possible for vehicles approaching the first flashing arrow sign. Lane closures shall not begin at the top of crest vertical curve or on a horizontal curve.
9. All cones used for lane closures during the hours of darkness shall be fitted with retroreflective bands (or sleeves) as specified in the specifications.
10. Portable delineators, placed at one-half the spacing indicated for traffic cones, may be used instead of cones for daytime closures only.
11. Unless otherwise specified in the special provisions, a minimum of 3 cones shall be placed transversely across each closed lane and shoulder at each location where a taper across a traffic lane ends and every 2000' as shown on the "Lane Closure With Partial Shoulder Use" detail. Two Type II barricades may be used instead of the 3 cones. The transverse alignment of the cones or barricades on the closed shoulder may be shifted from the transverse alignment to provide access to the work.
12. Unless otherwise specified in the special provisions, the 2L tangent shown along lane lines shall be used between the L tapers required for each closed traffic lane.
13. A minimum of Two Type II or III barricades shall be placed across each closed lane and shoulder at the location shown and every 2000' within the complete closure area. Within the complete closure area, the transverse alignment of the barricades on the closed shoulder may be shifted from the transverse alignment to provide access to the work.
14. When specified in the special provisions, a W20-2 "DETOUR AHEAD" sign is to be used in place of the W20-3 "FREEWAY CLOSED AHEAD" sign.

SIGN PANEL SIZE (Min)

- A 48" x 48"
- B 48" x 18"
- C 48" x 30"

LEGEND

- TRAFFIC CONE
- TRAFFIC CONE (OPTIONAL TAPER)
- TEMPORARY TRAFFIC CONTROL SIGN
- FLASHING ARROW SIGN (FAS)
- FAS SUPPORT OR TRAILER
- PORTABLE FLASHING BEACON

STATE OF CALIFORNIA
DEPARTMENT OF TRANSPORTATION

TRAFFIC CONTROL SYSTEM FOR LANE CLOSURES ON FREEWAYS AND EXPRESSWAYS

NO SCALE

RSP T10A DATED APRIL 19, 2013 SUPERSEDES STANDARD PLAN T10A DATED MAY 20, 2011 - PAGE 238 OF THE STANDARD PLANS BOOK DATED 2010.

REVISED STANDARD PLAN RSP T10A

2010 REVISED STANDARD PLAN RSP T10A

12-18-12

Dist	COUNTY	ROUTE	POST MILES TOTAL PROJECT	SHEET No.	TOTAL SHEETS
04	CC/Mrn	580	5.0/7.8, 0.0/3.3	449	579

REGISTERED CIVIL ENGINEER

April 19, 2013
PLANS APPROVAL DATE

REGISTERED PROFESSIONAL ENGINEER Gurinderpal Bhullar No. C48815 Exp. 9-30-14 CIVIL STATE OF CALIFORNIA

THE STATE OF CALIFORNIA OR ITS OFFICERS OR AGENTS SHALL NOT BE RESPONSIBLE FOR THE ACCURACY OR COMPLETENESS OF SCANNED COPIES OF THIS PLAN SHEET.

TO ACCOMPANY PLANS DATED _____

TYPICAL RAMP CLOSURES

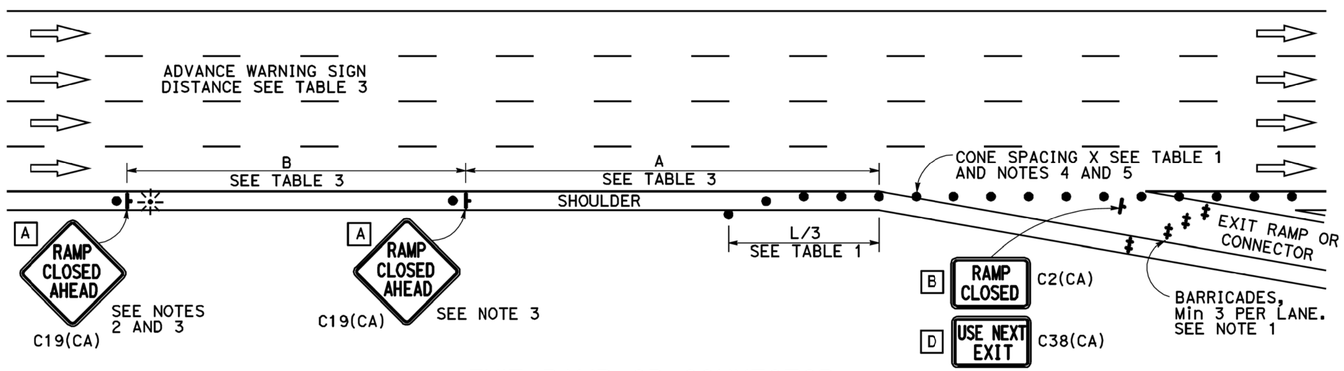

EXIT RAMP OR CONNECTOR

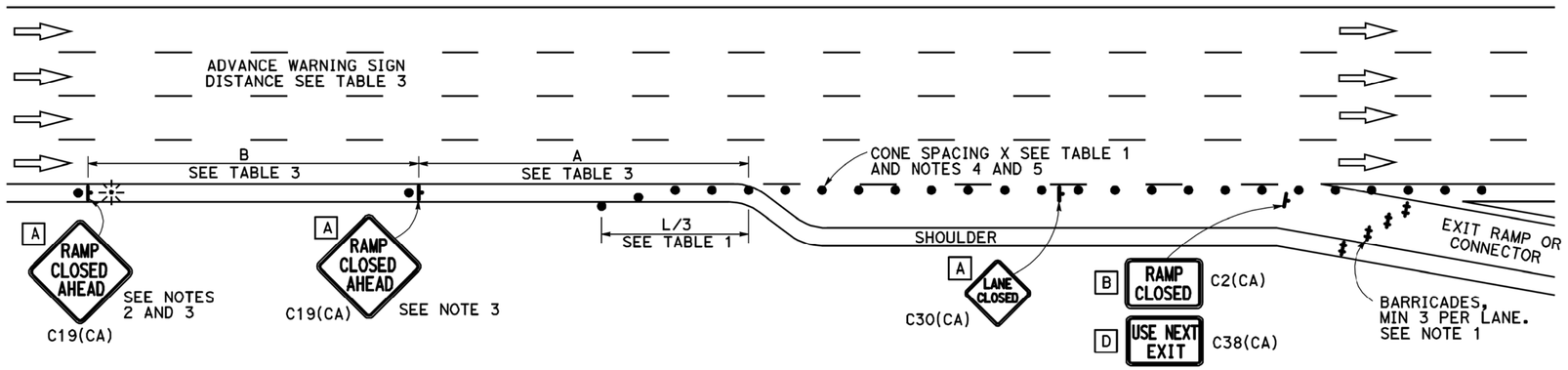

EXIT RAMP OR CONNECTOR WITH ADDITIONAL LANE

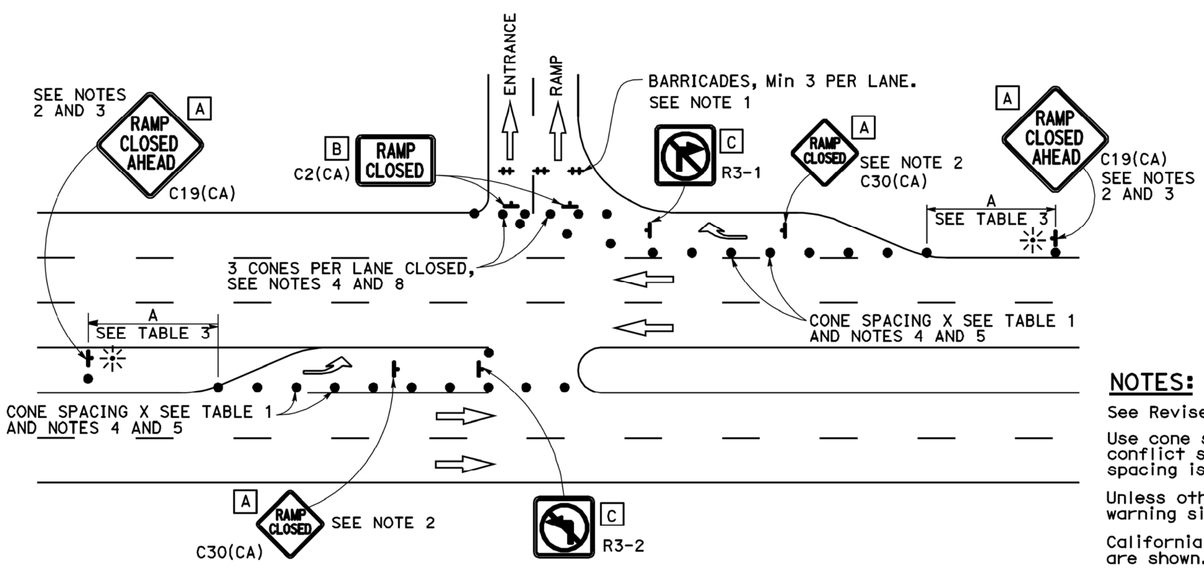

ENTRANCE RAMP WITH TURNING POCKETS

SIGN PANEL SIZE (Min)

- A 48" x 48"
- B 48" x 30"
- C 36" x 36"
- D 48" x 36"

LEGEND

- ● TRAFFIC CONE
- ⊢ TEMPORARY TRAFFIC CONTROL SIGN
- ‡ BARRICADES
- ✳ PORTABLE FLASHING BEACON

NOTES:

1. Barricades shall be Type I, II, or III for closures lasting one week or less and Type III for closures lasting longer than one week.
2. In addition to placing the C19(CA) "RAMP CLOSED AHEAD" and C30(CA) "RAMP CLOSED" signs, black on orange overlay plates with the word "CLOSED" may be mounted, as directed by the Engineer, on all guide signs that refer to the closed ramp. The letter size on the overlay shall be the same as the guide sign.
3. Each advance C19(CA) "RAMP CLOSED AHEAD" sign shall be equipped with at least two flags for daytime closure. Each flag shall be at least 16" x 16" in size and shall be orange or fluorescent red-orange in color. A flashing beacon shall be placed on top of the first C19(CA) sign during hours of darkness.
4. All cones used for ramp closures during the hours of darkness shall be fitted with retroreflective bands (or sleeves) as specified in the specifications.
5. Portable delineators, placed at one-half the spacing indicated for traffic cones, may be used instead of cones for daytime ramp closures only.
6. At least one person shall be assigned to provide full time maintenance of traffic control devices, unless otherwise directed by the Engineer.
7. The existing "EXIT" signs shall be covered during ramp closures.
8. A minimum of 3 cones shall be placed transversely across each closed lane and shoulder.

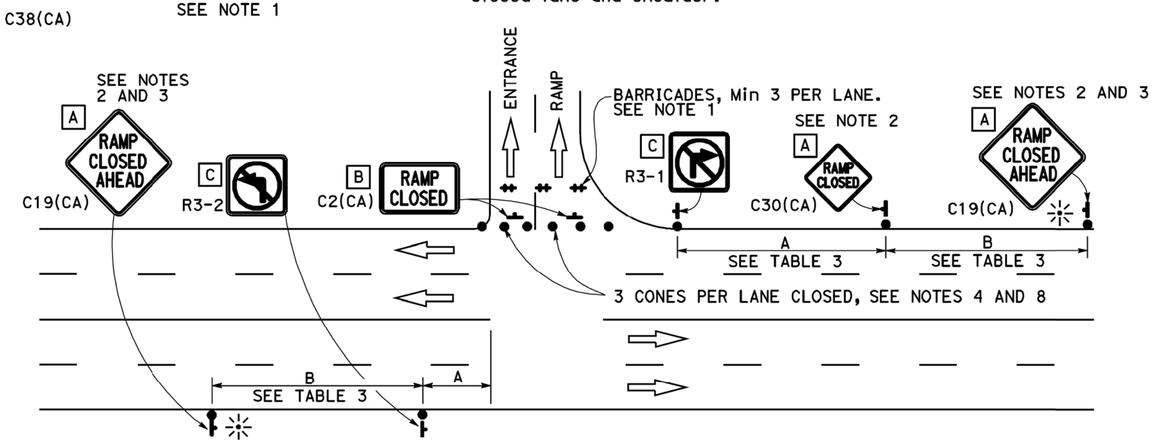

ENTRANCE RAMP WITHOUT TURNING POCKETS

NOTES:

See Revised Standard Plan RSP T9 for tables.

Use cone spacing X for taper segment, Y for tangent segment or Z for conflict situations, as approriate, per Table 1, unless X, Y, or Z cone spacing is shown on this sheet.

Unless otherwise specified in the special provisions, all temporary warning signs shall have black legend on fluorescent orange background.

California codes are designated by (CA). Otherwise, Federal (MUTCD) codes are shown.

STATE OF CALIFORNIA
DEPARTMENT OF TRANSPORTATION

TRAFFIC CONTROL SYSTEM FOR RAMP CLOSURE

NO SCALE

RSP T14 DATED APRIL 19, 2013 SUPERSEDES STANDARD PLAN T14
DATED MAY 20, 2011 - PAGE 242 OF THE STANDARD PLANS BOOK DATED 2010.

REVISED STANDARD PLAN RSP T14

2010 REVISED STANDARD PLAN RSP T14

12-18-12

Dist	COUNTY	ROUTE	POST MILES TOTAL PROJECT	SHEET No.	TOTAL SHEETS
04	CC/Mrn	580	5.0/7.8, 0.0/3.3	450	579

REGISTERED CIVIL ENGINEER

April 20, 2012
PLANS APPROVAL DATE

REGISTERED PROFESSIONAL ENGINEER Gary Wang No. C58298 Exp. 6-30-12 CIVIL STATE OF CALIFORNIA

THE STATE OF CALIFORNIA OR ITS OFFICERS OR AGENTS SHALL NOT BE RESPONSIBLE FOR THE ACCURACY OR COMPLETENESS OF SCANNED COPIES OF THIS PLAN SHEET.

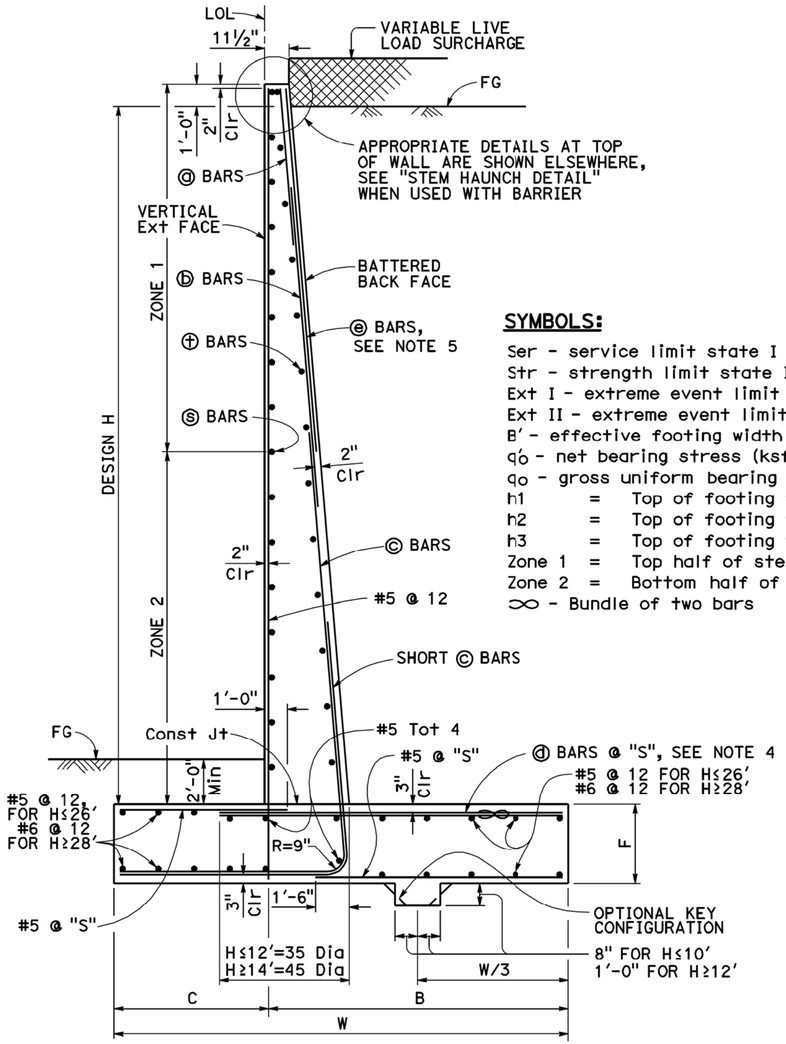

TYPICAL SECTION

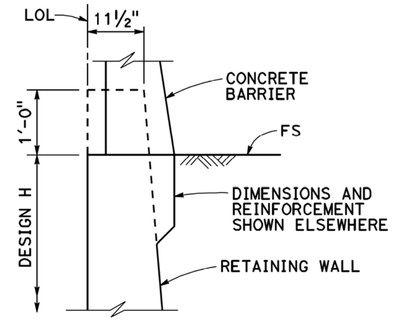

STEM HAUNCH DETAIL

SYMBOLS:

Ser - service limit state I
Str - strength limit state I
Ext I - extreme event limit state I
Ext II - extreme event limit state II
B' - effective footing width (ft)
q_o' - net bearing stress (ksf), OG assumed to be FG at toe
q_o - gross uniform bearing stress (ksf)
h1 = Top of footing to top of short ⓒ bar
h2 = Top of footing to top of ⓒ bar
h3 = Top of footing to top of ⓓ bar
Zone 1 = Top half of stem height
Zone 2 = Bottom half of stem height
∞ - Bundle of two bars

DESIGN CONDITIONS:

Design H may be exceeded by 6" before going to the next size. Special footing design is required where foundation material is incapable of supporting bearing stress listed in the table.

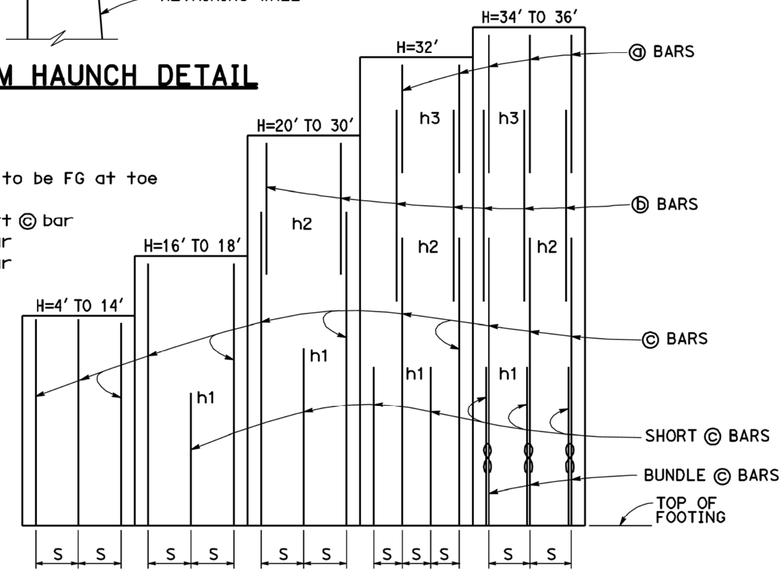

ELEVATION

DESIGN NOTES:

TO ACCOMPANY PLANS DATED _____

DESIGN: AASHTO LRFD Bridge Design Specifications, 4th Edition with California Amendments

LS: Varied surcharge on level ground surface

DC: Stem Architectural Treatment of thickness up to 6" of concrete (75 psf) considered

CT: 54 kip transverse force applied at He = 32", distributed over 10 feet at the top of wall and 1 : 1 distribution down and outward. Distribution below footing taken no less than 40'.

SEISMIC: $k_h = 0.2$, $k_v = 0.0$

SOIL: $\phi = 34°$, $\gamma = 120$ pcf

REINFORCED CONCRETE: f'c = 3,600 psi
fy = 60,000 psi

LOAD COMBINATIONS AND LIMIT STATES:

Service I	Q = 1.00DC+1.00EV+1.00EH+1.00LS
Strength I	Q = αDC+βEV+ηEH+1.75LS
Extreme I	Q = 1.00DC+1.00EV+1.00EH+1.00EQD+1.00EQE
Extreme II	Q = 1.00DC+1.00EV+1.00EH+1.00CT

Where:

Q:	Force Effects
α:	1.25 or 0.90, Whichever Controls Design
β:	1.35 or 1.00, Whichever Controls Design
η:	1.50 or 0.90, Whichever Controls Design
DC:	Dead Load of Structure Components
EH:	Horizontal Earth Fill Pressure
EV:	Vertical Earth Pressure from Earth Fill Weight
LS:	Live Load Surcharge
EQE:	Seismic Earth Pressure
EQD:	Soil and Structural and Nonstructural Components Inertia
CT:	Vehicular Collision Force

TABLE OF REINFORCING STEEL, DIMENSIONS AND DATA

DESIGN H	4'	6'	8'	10'	12'	14'	16'	18'	20'	22'	24'	26'	28'	30'	32'	34'	36'
W	6'-10"	7'-0"	7'-3"	7'-7"	8'-4"	9'-7"	10'-9"	12'-0"	13'-3"	14'-6"	15'-9"	17'-1"	18'-5"	19'-10"	21'-2"	22'-7"	24'-0"
C	2'-2"	2'-3"	2'-3"	2'-4"	2'-6"	3'-0"	3'-6"	4'-0"	4'-6"	5'-0"	5'-5"	6'-0"	6'-6"	7'-2"	7'-8"	8'-2"	9'-0"
B	4'-8"	4'-9"	5'-0"	5'-3"	5'-10"	6'-7"	7'-3"	8'-0"	8'-9"	9'-6"	10'-4"	11'-1"	11'-11"	12'-8"	13'-6"	14'-5"	15'-0"
F	1'-4"	1'-4"	1'-4"	1'-4"	1'-6"	1'-8"	1'-8"	1'-9"	1'-9"	1'-11"	2'-2"	2'-5"	2'-10"	3'-3"	3'-6"	4'-0"	4'-3"
BATTER	½: 12	½: 12	½: 12	½: 12	½: 12	½: 12	½: 12	½: 12	½: 12	½: 12	⅝: 12	⅝: 12	¾: 12	⅞: 12	1 : 12	1 : 12	1 : 12
SPACING "S"	9"	9"	9"	9"	9"	7"	6"	5"	6"	6"	6"	6"	6"	6"	6"	10"	8"
ⓐ BARS	-	-	-	-	-	-	-	-	-	-	-	-	-	-	#7	#7	#6
ⓑ BARS	-	-	-	-	-	-	-	-	#7	#7	#7	#7	#7	#7	#9	#9	#8
ⓒ BARS	#6	#6	#6	#6	#6	#6	#7	#7	#8	#9	#9	#10	#10	#10	#11	#11	#11
ⓓ BARS	#5	#5	#6	#6	#6	#6	#9	#8	#8	#9	#9	#10	#10	#10	#11	#11	#11
h1	-	-	-	-	-	-	5'-9"	5'-10"	8'-0"	9'-0"	10'-1"	11'-0"	12'-1"	13'-0"	13'-0"	12'-7"	11'-6"
h2	-	-	-	-	-	-	-	-	10'-5"	13'-0"	14'-7"	17'-6"	19'-0"	20'-5"	19'-0"	18'-0"	20'-2"
h3	-	-	-	-	-	-	-	-	-	-	-	-	-	-	21'-2"	21'-10"	24'-0"
ZONE 1 ⓢ BARS	#5 @ 18	#5 @ 18	#5 @ 18	#5 @ 18	#5 @ 18	#5 @ 18	#5 @ 18	#5 @ 18	#5 @ 18	#5 @ 18	#5 @ 12	#5 @ 12	#5 @ 12	#5 @ 12	#5 @ 12	#5 @ 12	#5 @ 12
ZONE 2 ⓢ BARS	#5 @ 18	#5 @ 18	#5 @ 18	#5 @ 18	#5 @ 18	#5 @ 18	#5 @ 12	#5 @ 12	#5 @ 12	#5 @ 12	#5 @ 12	#5 @ 12	#6 @ 12	#6 @ 12	#6 @ 12	#7 @ 12	#7 @ 12
ZONE 1 ⓕ BARS	#4 @ 18	#4 @ 18	#4 @ 18	#4 @ 18	#4 @ 18	#4 @ 18	#4 @ 18	#4 @ 18	#4 @ 18	#4 @ 18	#4 @ 12	#4 @ 12	#4 @ 18	#4 @ 12	#4 @ 12	#4 @ 12	#4 @ 12
ZONE 2 ⓕ BARS	#4 @ 18	#4 @ 18	#4 @ 18	#4 @ 18	#4 @ 18	#4 @ 18	#4 @ 18	#4 @ 18	#4 @ 18	#4 @ 18	#4 @ 12	#4 @ 12	#4 @ 12	#4 @ 12	#5 @ 12	#5 @ 12	#5 @ 12
Ser: B', q_o'	6.8, 0.7	6.5, 1.0	6.2, 1.3	6.0, 1.6	6.3, 2.0	7.5, 2.1	8.6, 2.2	9.8, 2.3	11.0, 2.4	12.1, 2.5	13.2, 2.8	14.4, 2.9	15.5, 3.1	16.8, 3.3	18.0, 3.5	19.2, 3.7	20.6, 3.7
Str: B', q_o	6.6, 1.6	5.0, 1.8	3.6, 2.3	3.0, 3.3	3.2, 4.0	4.3, 3.8	5.3, 3.7	6.4, 3.7	7.4, 3.8	8.2, 4.1	9.0, 4.4	9.9, 4.6	10.7, 4.9	11.7, 5.2	12.6, 5.4	13.6, 5.8	14.6, 5.9
Ext I: B', q_o	5.2, 1.1	4.7, 1.5	3.9, 2.2	3.1, 3.4	2.8, 4.8	3.2, 5.3	3.6, 5.7	4.1, 6.1	4.6, 6.4	5.0, 6.9	5.3, 7.6	5.8, 8.1	6.1, 8.9	6.7, 9.4	7.1, 10.0	7.5, 10.7	8.2, 10.9
Ext II: B', q_o	2.6, 2.2	2.7, 2.6	2.8, 3.1	2.9, 3.6	3.7, 3.6	5.2, 3.3	6.7, 3.1	8.3, 3.0	9.8, 3.0	11.2, 3.1	12.5, 3.2	13.9, 3.4	15.2, 3.6	16.7, 3.8	18.0, 4.0	19.3, 4.2	20.8, 4.3

NOTES:

1. For details not shown and drainage notes see RSP B3-5
2. For wall stem joint details see B0-3/3-3 and B0-3/3-4
3. At ⓒ bars:
   H ≤ 6', no splices are allowed within 1'-8" above the top of footing.
   H > 6', no splices are allowed within H/4 above the top of footing.
4. Bundle ⓓ bars for H = 34' & 36'.
5. Provide #6 @ 10" x 15'-0" ⓔ bars over a distance of 8'-0" measured from all expansion joints, begin wall and end wall locations. For H ≤ 14', hook ⓔ bar into footing and reduce bar length as needed to maintain Min Clr cover.

STATE OF CALIFORNIA
DEPARTMENT OF TRANSPORTATION

RETAINING WALL TYPE 1 (CASE 1)

NO SCALE

RSP B3-1A DATED APRIL 20, 2012 SUPPLEMENTS THE STANDARD PLANS BOOK DATED 2010.

REVISED STANDARD PLAN RSP B3-1A

2010 REVISED STANDARD PLAN RSP B3-1A

2-22-12

Dist	COUNTY	ROUTE	POST MILES TOTAL PROJECT	SHEET No.	TOTAL SHEETS
04	CC/Mrn	580	5.0/7.8, 0.0/3.3	451	579

REGISTERED CIVIL ENGINEER

April 20, 2012
PLANS APPROVAL DATE

REGISTERED PROFESSIONAL ENGINEER Gary Wang No. C58298 Exp. 6-30-12 CIVIL STATE OF CALIFORNIA

THE STATE OF CALIFORNIA OR ITS OFFICERS OR AGENTS SHALL NOT BE RESPONSIBLE FOR THE ACCURACY OR COMPLETENESS OF SCANNED COPIES OF THIS PLAN SHEET.

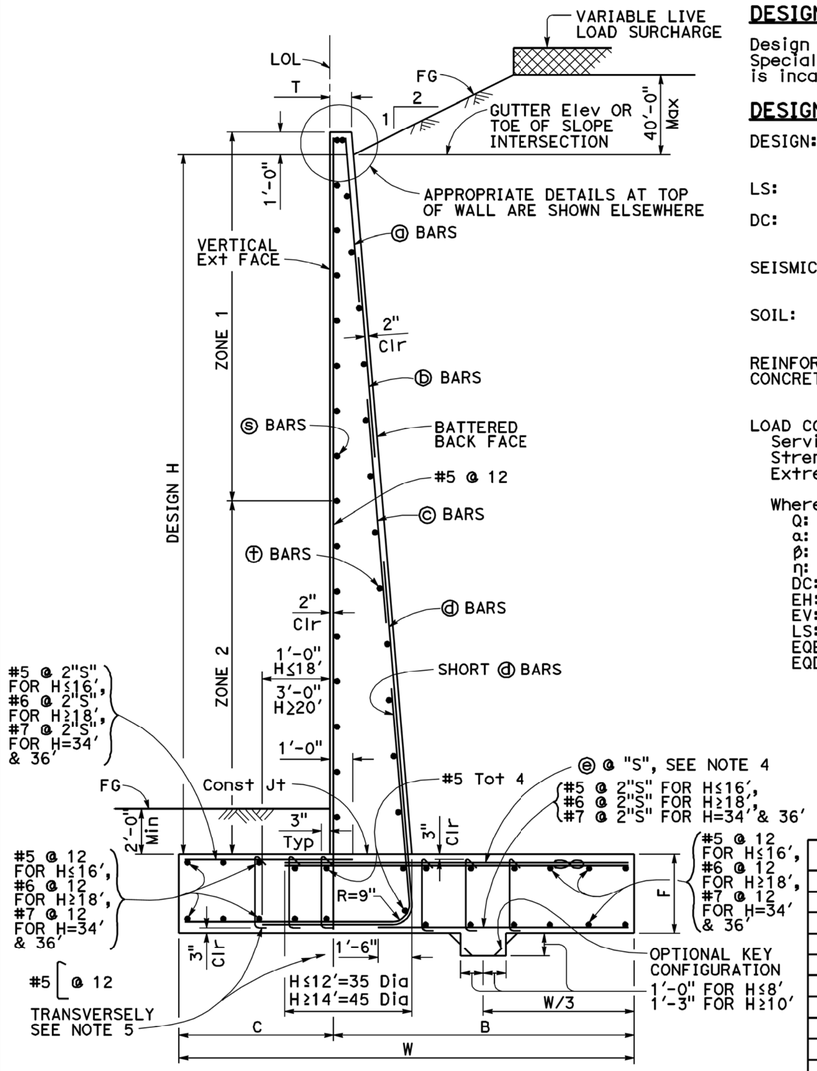

TYPICAL SECTION

NOTES:

1. For details not shown and drainage notes see RSP B3-5
2. For wall stem joint details see BO-3 / 3-3 and BO-3 / 3-4
3. At ⓓ and short ⓓ bars:
   H ≤ 6', no splices are allowed within 1'-8" above the top of footing.
   H > 6', no splices are allowed within H/4 above the top of footing.
4. Bundle ⓔ bars for H ≥ 26'.
5. Hook stirrups around & space with alternating transverse reinforcement at 2 x "S".

DESIGN CONDITIONS:

Design H may be exceeded by 6" before going to the next size. Special footing design is required where foundation material is incapable of supporting bearing stress listed in the table.

DESIGN NOTES:

DESIGN: AASHTO LRFD Bridge Design Specifications, 4th Edition with California Amendments

LS: Varied surcharge on level ground surface

DC: Stem Architectural Treatment of thickness up to 6" of concrete (75 psf) considered

SEISMIC: $k_h = 0.2$, $k_v = 0.0$

SOIL: $\phi = 34°$, $\gamma = 120$ pcf

REINFORCED CONCRETE: $f'c = 3{,}600$ psi, $fy = 60{,}000$ psi

LOAD COMBINATIONS AND LIMIT STATES:

Service I: $Q = 1.00DC+1.00EV+1.00EH+1.00LS$
Strength I: $Q = \alpha DC+\phi EV+\eta EH+1.75LS$
Extreme I: $Q = 1.00DC+1.00EV+1.00EH+1.00EQD+1.00EQE$

Where:
- Q: Force Effects
- α: 1.25 or 0.90, Whichever Controls Design
- ϕ: 1.35 or 1.00, Whichever Controls Design
- η: 1.50 or 0.90, Whichever Controls Design
- DC: Dead Load of Structure Components
- EH: Horizontal Earth Fill Pressure
- EV: Vertical Earth Pressure from Earth Fill Weight
- LS: Live Load Surcharge
- EQE: Seismic Earth Pressure
- EQD: Soil and Structural and Nonstructural Components Inertia

SYMBOLS:

TO ACCOMPANY PLANS DATED _____

Ser - service limit state I
Str - strength limit state I
Ext - extreme event limit state I
B' - effective footing width (ft)
q'_o - net bearing stress (ksf), OG assumed to be FG at toe
q_o - gross uniform bearing stress (ksf)
h1 = Top of footing to top of short ⓓ bar
h2 = Top of footing to top of ⓓ bar
h3 = Top of footing to top of ⓒ bar
h4 = Top of footing to top of ⓑ bar
Zone 1 = Top half of stem height
Zone 2 = Bottom half of stem height
∞ - Bundle of two bars

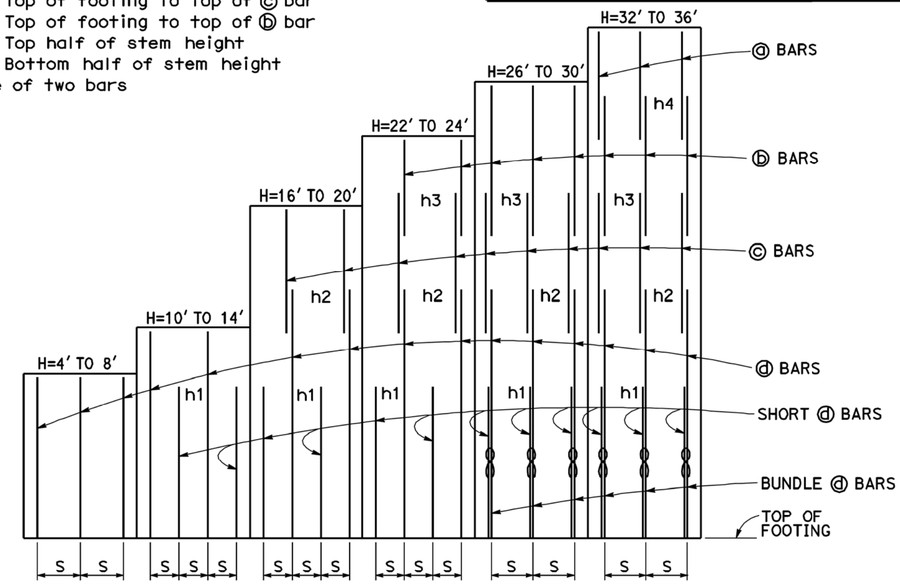

ELEVATION

TABLE OF REINFORCING STEEL, DIMENSIONS AND DATA

DESIGN H	4'	6'	8'	10'	12'	14'	16'	18'	20'	22'	24'	26'	28'	30'	32'	34'	36'
W	6'-0"	7'-6"	9'-6"	11'-0"	12'-6"	15'-6"	17'-3"	19'-6"	21'-9"	23'-6"	26'-0"	28'-1"	30'-3"	31'-6"	33'-0"	34'-8"	35'-11"
C	2'-0"	2'-6"	3'-3"	3'-6"	4'-3"	5'-0"	5'-3"	5'-9"	6'-9"	7'-3"	8'-3"	8'-9"	9'-0"	9'-6"	10'-0"	10'-10"	11'-3"
B	4'-0"	5'-0"	6'-3"	7'-6"	8'-3"	10'-6"	12'-0"	13'-9"	15'-0"	16'-3"	17'-9"	19'-4"	21'-3"	22'-0"	23'-0"	23'-10"	24'-8"
F	1'-6"	1'-6"	2'-0"	2'-3"	2'-6"	2'-8"	2'-10"	3'-0"	3'-4"	3'-6"	3'-6"	3'-7"	3'-7"	3'-9"	3'-9"	4'-0"	4'-4"
T	11½"	11½"	11½"	11½"	11½"	11½"	11½"	11½"	11½"	11½"	11½"	11½"	1'-2"	1'-5"	1'-10"	2'-3"	2'-9"
BATTER	½: 12	½: 12	½: 12	½: 12	½: 12	⅝: 12	⅝: 12	¾: 12	⅞: 12	1 : 12	1⅛: 12	1⅛: 12	1⅛: 12	1⅛: 12	1⅛: 12	1⅛: 12	1⅛: 12
SPACING "S"	16"	12"	10"	7"	7"	7"	7"	7"	7"	6"	6"	10"	8"	7"	7"	7"	7"
ⓐ BARS	-	-	-	-	-	-	-	-	-	-	-	-	-	-	#5	#5	#5
ⓑ BARS	-	-	-	-	-	-	-	-	-	#5	#5	#5	#5	#5	#7	#7	#7
ⓒ BARS	-	-	-	-	-	-	#6	#6	#6	#7	#8	#8	#8	#8	#9	#9	#9
ⓓ BARS	#5	#5	#6	#6	#7	#8	#9	#10	#10	#10	#11	#11	#11	#11	#11	#11	#11
ⓔ BARS	#5	#5	#6	#6	#7	#8	#9	#10	#10	#10	#11	#11	#11	#11	#11	#11	#11
h1	-	-	-	5'-3"	6'-4"	7'-6"	8'-9"	9'-9"	11'-0"	11'-3"	11'-6"	10'-3"	11'-9"	12'-3"	12'-6"	13'-3"	13'-8"
h2	-	-	-	-	-	-	12'-8"	15'-6"	17'-0"	16'-6"	17'-3"	18'-0"	17'-6"	17'-4"	14'-10"	15'-9"	16'-4"
h3	-	-	-	-	-	-	-	-	-	18'-9"	21'-3"	21'-3"	22'-4"	22'-8"	18'-0"	18'-6"	19'-6"
h4	-	-	-	-	-	-	-	-	-	-	-	-	-	-	26'-3"	27'-4"	28'-6"
No. of Toe Stirrups	0	0	0	0	0	0	0	0	0	0	0	5	5	6	7	8	9
No. of Heel Stirrups	0	0	0	0	0	0	0	0	4	6	7	8	10	10	11	11	11
ZONE 1 ⓢ BARS	#5 @ 18	#5 @ 18	#5 @ 18	#5 @ 18	#5 @ 18	#5 @ 18	#5 @ 18	#5 @ 18	#5 @ 12	#5 @ 12	#5 @ 12	#5 @ 12	#5 @ 12	#6 @ 12	#6 @ 12	#6 @ 10	#6 @ 10
ZONE 2 ⓢ BARS	#5 @ 18	#5 @ 18	#5 @ 18	#5 @ 18	#5 @ 18	#5 @ 12	#5 @ 12	#5 @ 12	#5 @ 12	#6 @ 12	#6 @ 12	#7 @ 12	#7 @ 12	#7 @ 12	#7 @ 12	#7 @ 10	#7 @ 10
ZONE 1 ⓣ BARS	#4 @ 18	#4 @ 18	#4 @ 18	#4 @ 18	#4 @ 18	#4 @ 18	#4 @ 18	#4 @ 18	#4 @ 18	#4 @ 18	#4 @ 18	#4 @ 12	#4 @ 12	#4 @ 12	#5 @ 12	#5 @ 12	#5 @ 12
ZONE 2 ⓣ BARS	#4 @ 18	#4 @ 18	#4 @ 18	#4 @ 18	#4 @ 18	#4 @ 12	#4 @ 12	#4 @ 12	#4 @ 12	#4 @ 12	#4 @ 12	#5 @ 12	#5 @ 12	#5 @ 12	#6 @ 12	#6 @ 12	#6 @ 12
Ser: B', q'_o	4.0, 0.9	5.5, 1.0	9.3, 1.0	10.9, 1.3	12.3, 1.5	14.8, 1.9	16.6, 2.1	18.7, 2.4	20.6, 2.7	22.3, 3.0	24.2, 3.3	26.1, 3.5	28.2, 3.9	29.6, 4.0	31.1, 4.2	32.7, 4.4	34.1, 4.6
Str: B', q_o	2.2, 2.2	3.5, 2.2	5.1, 2.3	6.3, 2.6	7.6, 2.7	12.9, 3.1	14.3, 3.6	16.5, 3.9	19.4, 4.5	20.7, 4.8	22.5, 5.2	24.3, 5.6	26.2, 6.0	27.5, 6.3	28.8, 6.6	30.3, 6.9	31.8, 7.2
Ext: B', q_o	2.3, 3.4	2.7, 4.4	3.6, 5.0	3.8, 6.5	4.5, 7.0	7.0, 6.1	7.6, 6.9	9.3, 7.0	11.0, 7.1	11.8, 7.6	14.1, 7.4	15.6, 7.7	17.1, 8.0	17.2, 8.7	18.1, 9.0	19.0, 9.4	19.4, 10.0

STATE OF CALIFORNIA
DEPARTMENT OF TRANSPORTATION

RETAINING WALL TYPE 1 (CASE 2)

NO SCALE

RSP B3-1B DATED APRIL 20, 2012 SUPPLEMENTS THE STANDARD PLANS BOOK DATED 2010.

REVISED STANDARD PLAN RSP B3-1B

2010 REVISED STANDARD PLAN RSP B3-1B

3-30-12

Dist	COUNTY	ROUTE	POST MILES TOTAL PROJECT	SHEET No.	TOTAL SHEETS
04	CC/Mrn	580	5.0/7.8, 0.0/3.3	452	579

TO ACCOMPANY PLANS DATED _____

REGISTERED CIVIL ENGINEER

April 20, 2012
PLANS APPROVAL DATE

REGISTERED PROFESSIONAL ENGINEER Gary Wang No. C58298 Exp. 6-30-12 CIVIL STATE OF CALIFORNIA

THE STATE OF CALIFORNIA OR ITS OFFICERS OR AGENTS SHALL NOT BE RESPONSIBLE FOR THE ACCURACY OR COMPLETENESS OF SCANNED COPIES OF THIS PLAN SHEET.

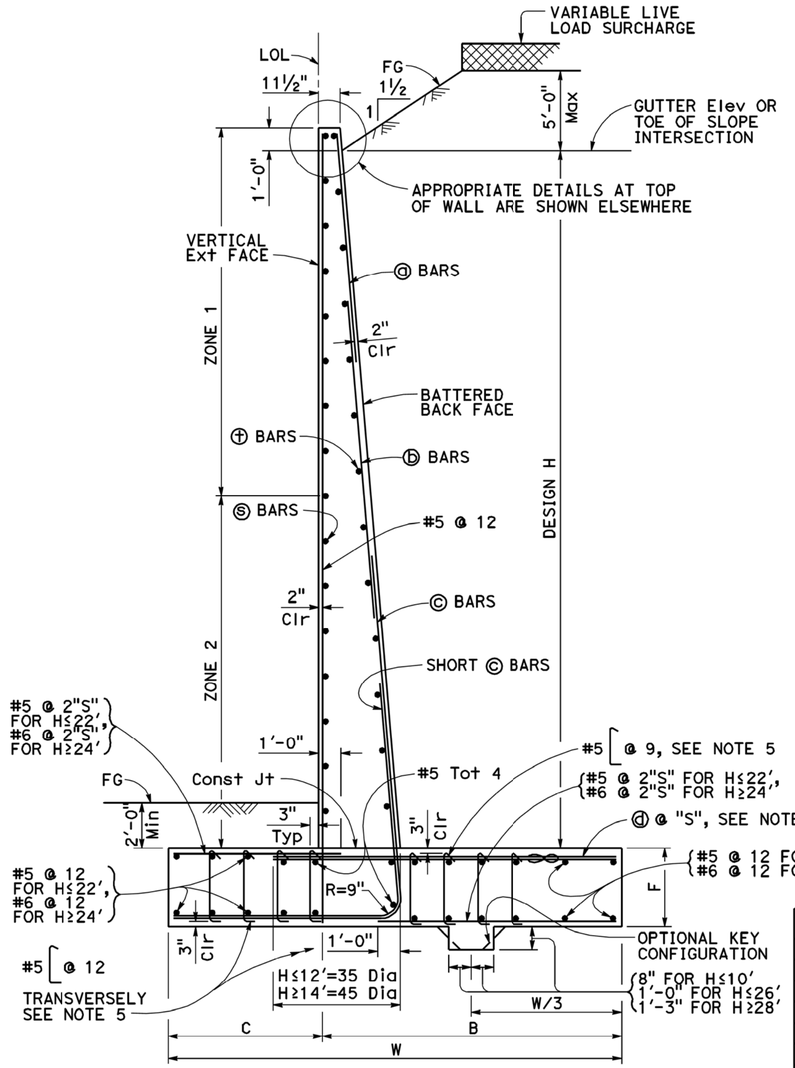

TYPICAL SECTION

NOTES:

1. For details not shown and drainage notes see RSP B3-5
2. For wall stem joint details see B0-3 / 3-3 and B0-3 / 3-4
3. At ⓒ bars:
   H ≤ 6', no splices are allowed within 1'-8" above the top of footing.
   H > 6', no splices are allowed within H/4 above the top of footing.
4. Bundle ⓓ bars for H = 36'.
5. Hook stirrups around & space with alternating transverse reinforcement at 2 x "S".

DESIGN CONDITIONS:

Design H may be exceeded by 6" before going to the next size. Special footing design is required where foundation material is incapable of supporting bearing stress listed in the table.

DESIGN NOTES:

DESIGN: AASHTO LRFD Bridge Design Specifications, 4th Edition with California Amendments

LS: Varied surcharge on level ground surface

DC: Stem Architectural Treatment of thickness up to 6" of concrete (75 psf) considered

SEISMIC: $k_h = 0.2$, $k_v = 0.0$

SOIL: $\phi = 34°$, $\gamma = 120$ pcf

REINFORCED CONCRETE: $f'c = 3{,}600$ psi, $fy = 60{,}000$ psi

LOAD COMBINATIONS AND LIMIT STATES:

Service I $Q = 1.00DC+1.00EV+1.00EH+1.00LS$
Strength I $Q = \alpha DC+\phi EV+\eta EH+1.75LS$
Extreme I $Q = 1.00DC+1.00EV+1.00EH+1.00EQD+1.00EQE$

Where:

Q: Force Effects
α: 1.25 or 0.90, Whichever Controls Design
φ: 1.35 or 1.00, Whichever Controls Design
η: 1.50 or 0.90, Whichever Controls Design
DC: Dead Load of Structure Components
EH: Horizontal Earth Fill Pressure
EV: Vertical Earth Pressure from Earth Fill Weight
LS: Live Load Surcharge
EQE: Seismic Earth Pressure
EQD: Soil and Structural and Nonstructural Components Inertia

SYMBOLS:

Ser - service limit state I
Str - strength limit state I
Ext - extreme event limit state I
B' - effective footing width (ft)
q'o - net bearing stress (ksf), OG assumed to be FG at toe
qo - gross uniform bearing stress (ksf)
h1 = Top of footing to top of short ⓒ bar
h2 = Top of footing to top of ⓒ bar
h3 = Top of footing to top of ⓑ bar
Zone 1 = Top half of stem height
Zone 2 = Bottom half of stem height
∞ - Bundle of two bars

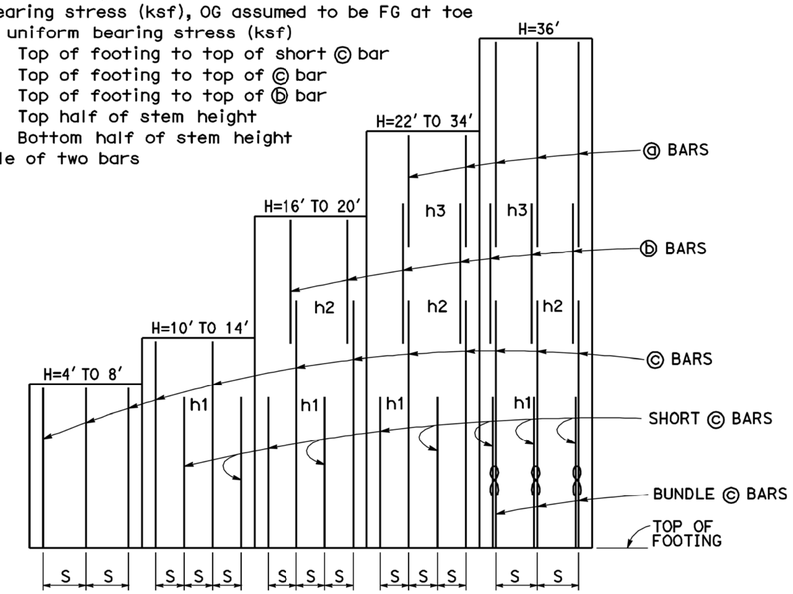

ELEVATION

TABLE OF REINFORCING STEEL, DIMENSIONS AND DATA

DESIGN H	4'	6'	8'	10'	12'	14'	16'	18'	20'	22'	24'	26'	28'	30'	32'	34'	36'
W	6'-5"	7'-3"	8'-3"	9'-3"	10'-8"	12'-6"	13'-9"	15'-1"	16'-6"	17'-10"	19'-3"	20'-4"	21'-5"	22'-8"	23'-11"	25'-1"	26'-4"
C	2'-2"	2'-6"	3'-0"	3'-6"	3'-8"	3'-11"	4'-0"	4'-7"	5'-3"	6'-0"	7'-0"	7'-9"	8'-3"	8'-8"	9'-0"	9'-6"	9'-10"
B	4'-3"	4'-9"	5'-3"	5'-9"	7'-0"	8'-7"	9'-9"	10'-6"	11'-3"	11'-10"	12'-3"	12'-7"	13'-2"	14'-0"	14'-11"	15'-7"	16'-6"
F	1'-4"	1'-4"	1'-4"	1'-6"	1'-6"	1'-6"	1'-8"	2'-0"	2'-4"	2'-9"	3'-2"	3'-0"	3'-0"	3'-0"	3'-3"	3'-3"	3'-3"
BATTER	½: 12	½: 12	½: 12	½: 12	½: 12	½: 12	½: 12	½: 12	½: 12	½: 12	⅝: 12	¾: 12	1 : 12	1 : 12	1⅛: 12	1⅛: 12	1⅛: 12
SPACING "S"	16"	16"	16"	8"	8"	7"	7"	7"	6"	6"	7"	7"	7"	6"	6"	6"	8"
ⓐ BARS	-	-	-	-	-	-	-	-	-	#5	#5	#5	#5	#5	#5	#6	#6
ⓑ BARS	-	-	-	-	-	-	#5	#5	#5	#7	#7	#7	#8	#8	#8	#9	#9
ⓒ BARS	#5	#5	#6	#5	#6	#6	#7	#8	#8	#9	#10	#10	#10	#10	#10	#11	#11
ⓓ BARS	#5	#5	#6	#5	#6	#8	#9	#9	#9	#10	#11	#9	#9	#9	#10	#10	#9
h1	-	-	-	4'-2"	4'-7"	6'-2"	7'-3"	8'-6"	8'-8"	9'-8"	11'-0"	12'-2"	14'-0"	13'-0"	15'-10"	14'-6"	12'-0"
h2	-	-	-	-	-	-	10'-6"	12'-9"	14'-2"	13'-8"	17'-0"	18'-6"	17'-10"	18'-9"	20'-3"	21'-0"	17'-0"
h3	-	-	-	-	-	-	-	-	-	15'-6"	17'-9"	19'-6"	21'-8"	23'-0"	24'-8"	25'-6"	24'-8"
No. of Toe Stirrups	0	0	0	0	0	0	0	0	0	0	0	6	6	7	7	7	8
No. of Heel Stirrups	0	0	0	0	0	0	0	0	0	0	0	6	6	6	6	6	6
ZONE 1 Ⓢ BARS	#5 @ 18	#5 @ 18	#5 @ 18	#5 @ 18	#5 @ 18	#5 @ 18	#5 @ 18	#5 @ 18	#5 @ 18	#5 @ 18	#5 @ 18	#5 @ 12	#5 @ 12	#5 @ 12	#5 @ 12	#5 @ 12	#5 @ 12
ZONE 2 Ⓢ BARS	#5 @ 18	#5 @ 18	#5 @ 18	#5 @ 18	#5 @ 18	#5 @ 18	#5 @ 12	#5 @ 12	#5 @ 12	#5 @ 12	#5 @ 12	#6 @ 12	#6 @ 12	#6 @ 12	#7 @ 12	#7 @ 12	#7 @ 12
ZONE 1 Ⓣ BARS	#4 @ 18	#4 @ 18	#4 @ 18	#4 @ 18	#4 @ 18	#4 @ 18	#4 @ 18	#4 @ 18	#4 @ 18	#4 @ 18	#4 @ 18	#4 @ 18	#4 @ 12	#4 @ 12	#4 @ 12	#4 @ 12	#4 @ 12
ZONE 2 Ⓣ BARS	#4 @ 18	#4 @ 18	#4 @ 18	#4 @ 18	#4 @ 18	#4 @ 18	#4 @ 18	#4 @ 18	#4 @ 18	#4 @ 18	#4 @ 12	#4 @ 12	#5 @ 12	#5 @ 12	#5 @ 12	#5 @ 12	#5 @ 12
Ser: B', q'o	4.3, 0.8	4.9, 1.1	5.6, 1.3	7.1, 1.5	8.0, 1.8	9.3, 2.1	10.6, 2.3	11.9, 2.5	13.3, 2.6	14.6, 2.8	15.9, 2.9	17.0, 3.0	18.0, 3.1	19.3, 3.3	20.4, 3.5	21.5, 3.7	22.7, 3.9
Str: B', qo	2.4, 2.2	2.4, 2.7	2.7, 3.2	3.0, 3.7	4.3, 3.8	5.9, 3.8	7.0, 4.1	7.9, 4.3	9.0, 4.5	9.9, 4.7	10.8, 4.9	11.6, 5.0	12.3, 5.2	13.3, 5.4	14.2, 5.7	15.0, 5.9	16.0, 6.1
Ext: B', qo	4.1, 1.5	3.9, 2.1	3.8, 2.8	3.5, 3.9	3.6, 4.9	4.2, 5.5	4.6, 6.3	5.0, 7.0	5.6, 7.4	6.0, 8.0	6.5, 8.4	6.9, 8.6	7.2, 9.2	7.7, 9.6	8.1, 10.4	8.4, 10.9	8.9, 11.3

STATE OF CALIFORNIA
DEPARTMENT OF TRANSPORTATION

RETAINING WALL TYPE 1 (CASE 3)

NO SCALE

RSP B3-1C DATED APRIL 20, 2012 SUPPLEMENTS THE STANDARD PLANS BOOK DATED 2010.

REVISED STANDARD PLAN RSP B3-1C

2010 REVISED STANDARD PLAN RSP B3-1C

3-30-12

Dist	COUNTY	ROUTE	POST MILES TOTAL PROJECT	SHEET No.	TOTAL SHEETS
04	CC/Mrn	580	5.0/7.8, 0.0/3.3	453	579

REGISTERED CIVIL ENGINEER

April 20, 2012
PLANS APPROVAL DATE

REGISTERED PROFESSIONAL ENGINEER Gary Wang No. C58298 Exp. 6-30-12 CIVIL STATE OF CALIFORNIA

THE STATE OF CALIFORNIA OR ITS OFFICERS OR AGENTS SHALL NOT BE RESPONSIBLE FOR THE ACCURACY OR COMPLETENESS OF SCANNED COPIES OF THIS PLAN SHEET.

TO ACCOMPANY PLANS DATED _____

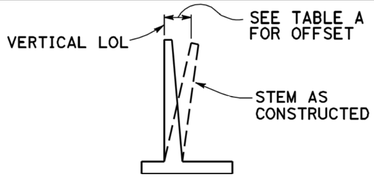

APPROXIMATE WALL OFFSET VALUES

Values for offseting forms to be determined by the Engineer.

TABLE A

H	OFFSET
4'-12'	H/200
14'-16'	H/160
18'-20'	H/140
22'-24'	H/130
26'-36'	2½"

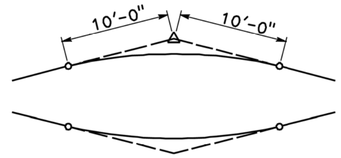

20'-0" VC AT TOP OF WALL SLOPE CHANGE

Where shown on the plans

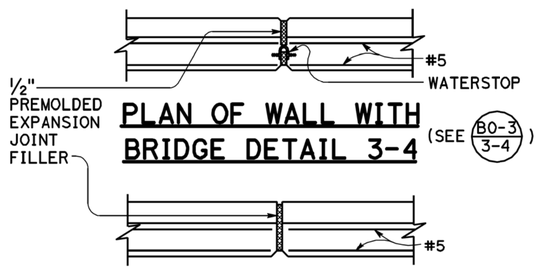

PLAN OF WALL WITH BRIDGE DETAIL 3-4

(SEE B0-3/3-4)

PLAN OF WALL WITH EXPANSION JOINT ONLY

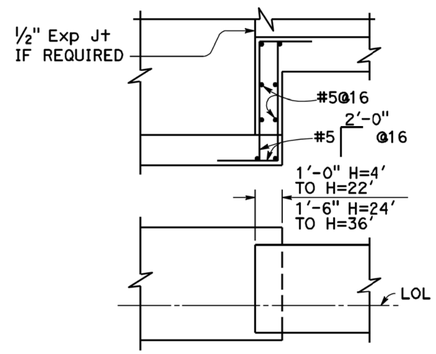

FOOTING STEP

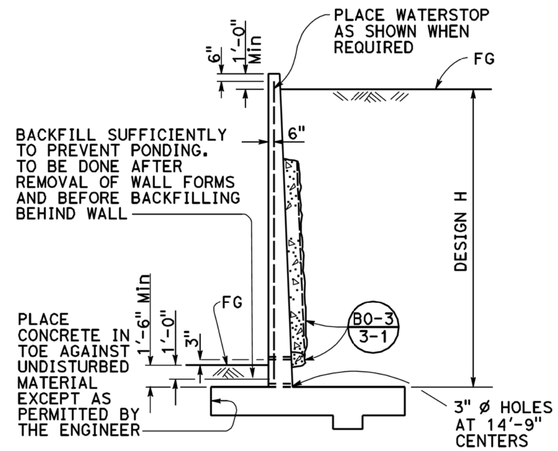

DESIGN AND DRAINAGE

DESIGN CONDITIONS:

Design "H" may be exceeded by 6" before going to the next size. Special footing design is required where foundation material is incapable of supporting bearing stress listed in table

Return wall not required unless shown elsewhere

DESIGN NOTES:

DESIGN: AASHTO LRFD Bridge Design Specifications, 4th edition with California Amendments

LIVE LOAD: Surcharge on level ground surface

SOIL: ø = 34°
γ = 120 pcf

REINFORCED CONCRETE: fy = 60,000 psi
fc' = 3,600 psi

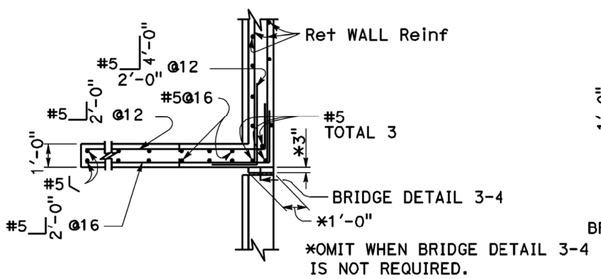

PLAN

(For return wall Type "A")

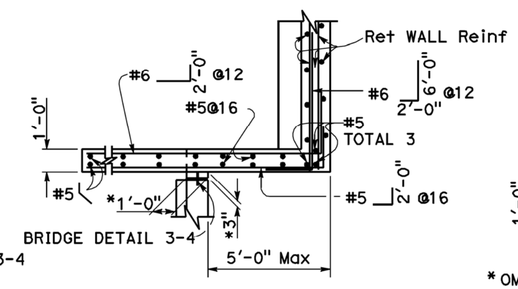

PLAN

(For return wall Type "B")

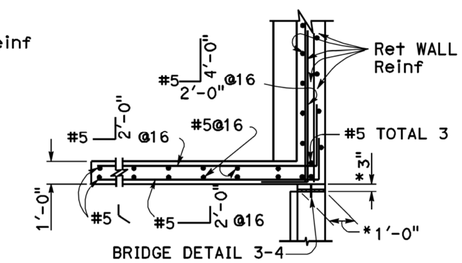

*OMIT WHEN BRIDGE DETAIL 3-4 IS NOT REQUIRED.

PLAN

(For return wall Type "C")

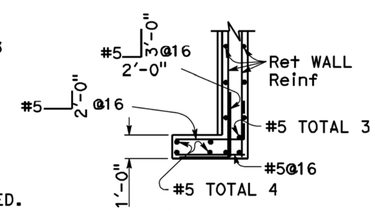

PLAN

(For return wall Type "D")

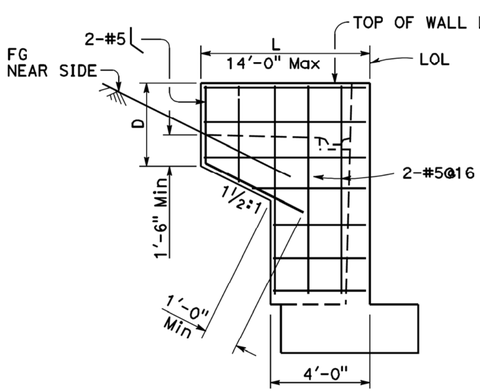

ELEVATION

RETURN WALL TYPE "A"

Use where H=8' or less

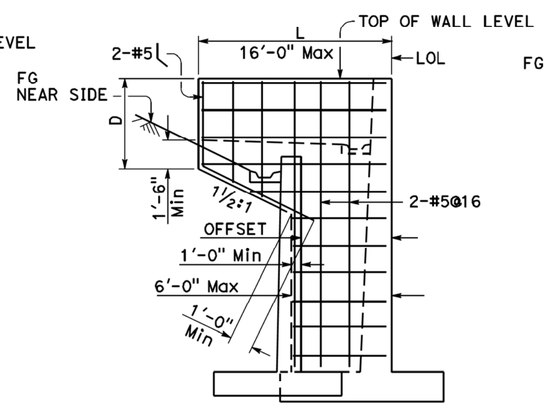

ELEVATION

RETURN WALL TYPE "B"

Use where H=10' or more on offset walls

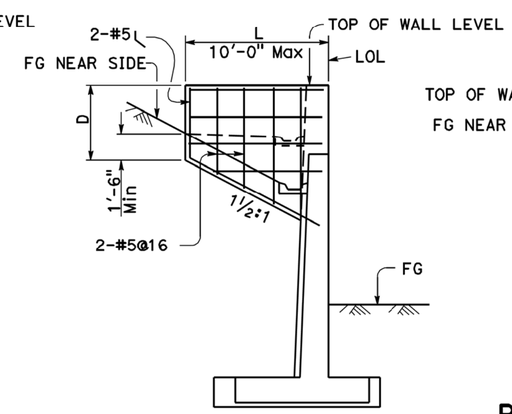

ELEVATION

RETURN WALL TYPE "C"

Use where H=10' or more on straight walls

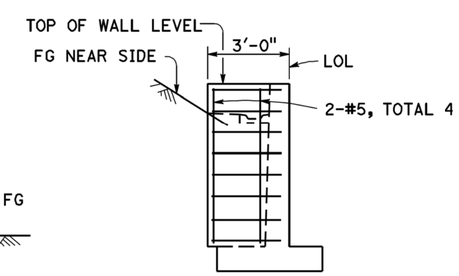

ELEVATION

RETURN WALL TYPE "D"

Use where H=6' or less

STATE OF CALIFORNIA
DEPARTMENT OF TRANSPORTATION

RETAINING WALL DETAILS No. 1

NO SCALE

RSP B3-5 DATED APRIL 20, 2012 SUPERSEDES STANDARD PLAN B3-5 DATED MAY 20, 2011 - PAGE 277 OF THE STANDARD PLANS BOOK DATED 2010.

REVISED STANDARD PLAN RSP B3-5

2010 REVISED STANDARD PLAN RSP B3-5

2-22-12

Dist	COUNTY	ROUTE	POST MILES TOTAL PROJECT	SHEET No.	TOTAL SHEETS
04	CC/Mrn	580	5.0/7.8, 0.0/3.3	454	579

Peter W. Norboe
REGISTERED CIVIL ENGINEER

July 15, 2016
PLANS APPROVAL DATE

REGISTERED PROFESSIONAL ENGINEER Peter W. Norboe No. C57519 Exp. 12-31-17 CIVIL STATE OF CALIFORNIA

THE STATE OF CALIFORNIA OR ITS OFFICERS OR AGENTS SHALL NOT BE RESPONSIBLE FOR THE ACCURACY OR COMPLETENESS OF SCANNED COPIES OF THIS PLAN SHEET.

TO ACCOMPANY PLANS DATED _____

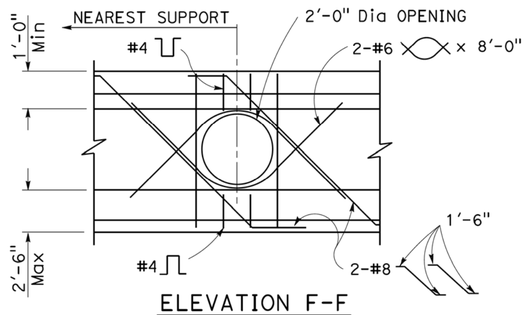

ELEVATION F-F

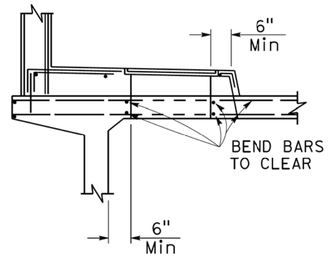

SECTION C-C

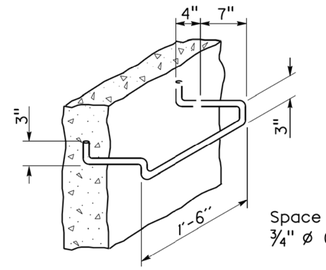

Space ladder rung @ 12
¾" ø Galvanize after fabrication

BAR STEP

LADDER RUNG DETAILS

DETAIL U44

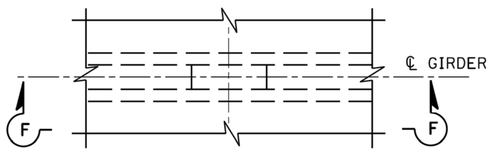

PART PLAN

GIRDER STEM ACCESS OPENING

DETAIL U41

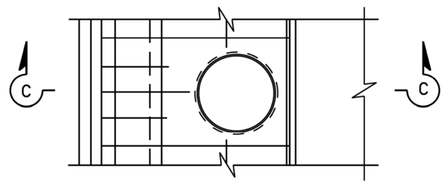

PART PLAN

SIDEWALK ACCESS OPENING

DETAIL U42

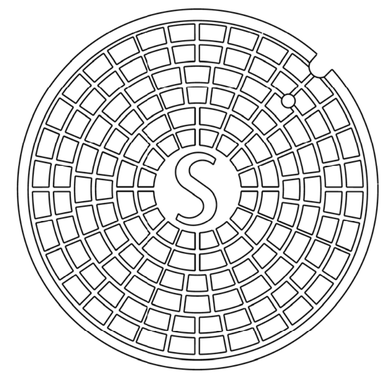

TOP OF MANHOLE COVER

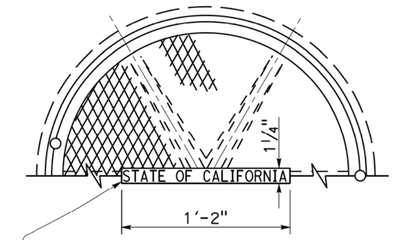

LETTERS 1" HIGH. NO OTHER INSCRIPTION TO APPEAR ON EXPOSED SURFACES.

TOP OF MANHOLE FRAME & COVER

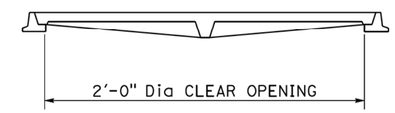

SECTION THROUGH FRAME & COVER

MANHOLE FRAME & COVER FOR SIDEWALKS

DETAIL U46

NOTES:

1. Frame and cover shall be cast iron.
2. Cover shall be supplied with bolt down or locking devices.

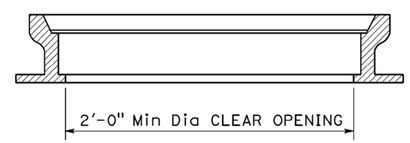

SECTION THROUGH FRAME

NON-ROCKING MANHOLE FRAME & COVER FOR DECKS

DETAIL U45

NOTES:

1. Step inserts may be substituted for the standard step detail. Step inserts shall comply with State Industrial Safety requirements.
2. Covers for use on sewer structures shall bear the letter "S"; on storm drain structures the letter "D"; on openings for utilities the letter "U".

NOTES:

1. For exact location of openings see other sheets.
2. Location and size of manholes may be modified as directed by the Engineer, provided minimum dimensions are maintained.
3. All reinforcement detailed to be placed in addition to reinforcement shown on other sheets.

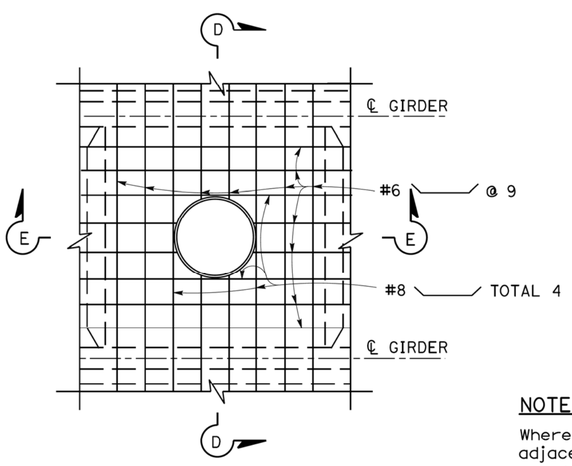

PART PLAN

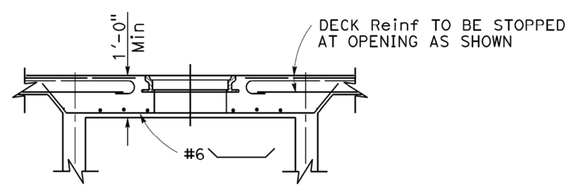

SECTION D-D

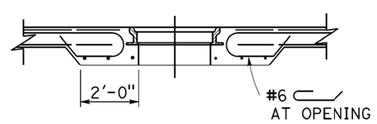

SECTION E-E

NOTE:

Where manhole is located adjacent to a diaphragm or abut, substitute half Section E-E on one side of Section E-E.

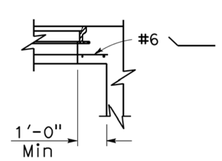

HALF SECTION E-E

DECK ACCESS OPENING

DETAIL U43

STATE OF CALIFORNIA
DEPARTMENT OF TRANSPORTATION

UTILITY DETAILS

NO SCALE

RSP B7-11 DATED JULY 15, 2016 SUPERSEDES STANDARD PLAN B7-11 DATED MAY 20, 2011 - PAGE 290 OF THE STANDARD PLANS BOOK DATED 2010.

REVISED STANDARD PLAN RSP B7-11

2010 REVISED STANDARD PLAN RSP B7-11

6-16-16

Dist	COUNTY	ROUTE	POST MILES TOTAL PROJECT	SHEET No.	TOTAL SHEETS
04	CC/Mrn	580	5.0/7.8, 0.0/3.3	455	579

REGISTERED CIVIL ENGINEER

October 21, 2011
PLANS APPROVAL DATE

REGISTERED PROFESSIONAL ENGINEER Tillat Satter No. C42892 Exp. 3-31-12 CIVIL STATE OF CALIFORNIA

THE STATE OF CALIFORNIA OR ITS OFFICERS OR AGENTS SHALL NOT BE RESPONSIBLE FOR THE ACCURACY OR COMPLETENESS OF SCANNED COPIES OF THIS PLAN SHEET.

TO ACCOMPANY PLANS DATED _____

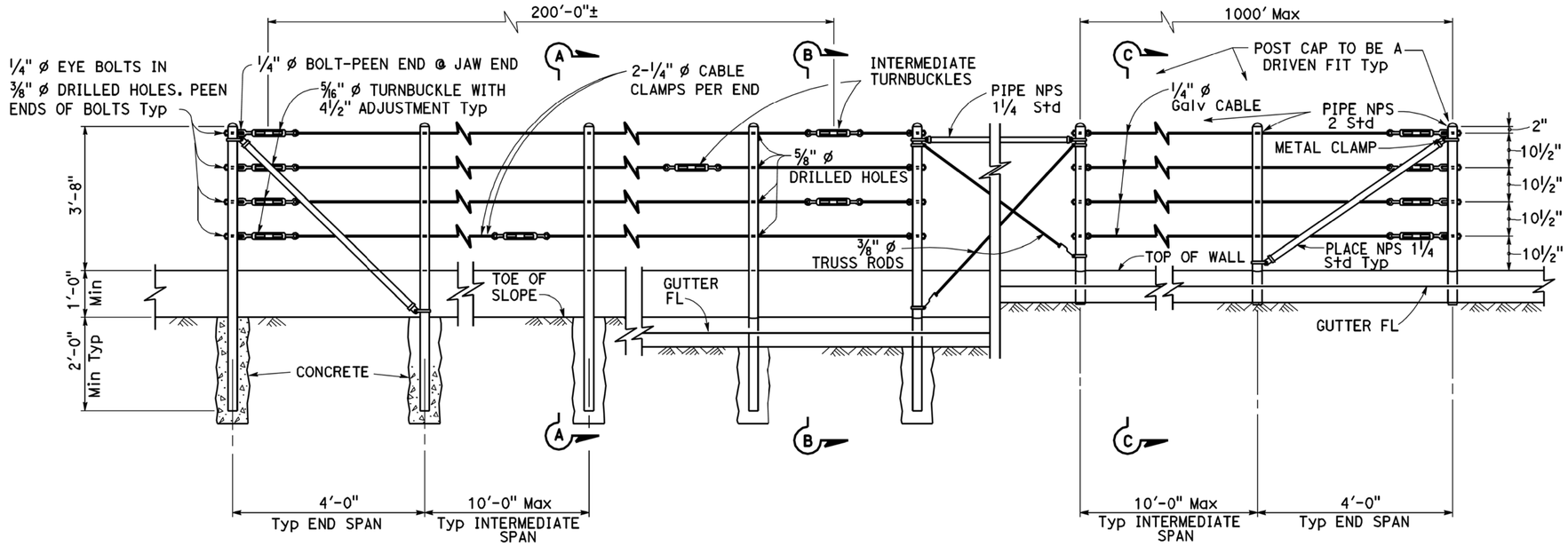

EXISTING WALL (WITHOUT GUTTER)
Existing

RETAINING WALL (WITH GUTTER)
Existing

RETAINING WALL (WITH GUTTER)
New construction

ELEVATION

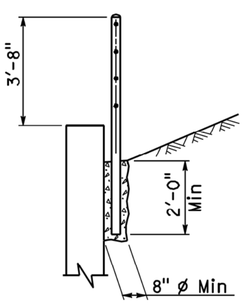

SECTION A-A
Existing

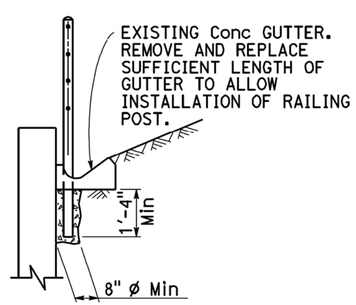

SECTION B-B
Existing

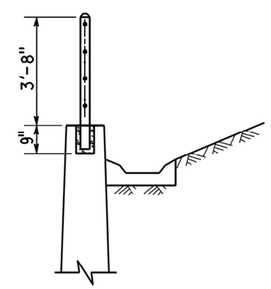

SECTION C-C
New construction

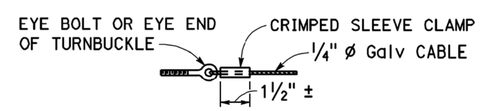

ALTERNATIVE CABLE CONNECTION

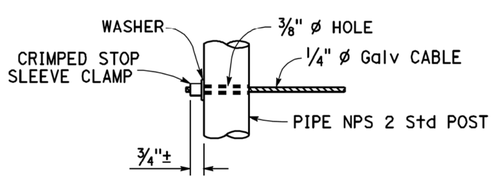

ALTERNATIVE DEAD END ANCHORAGE

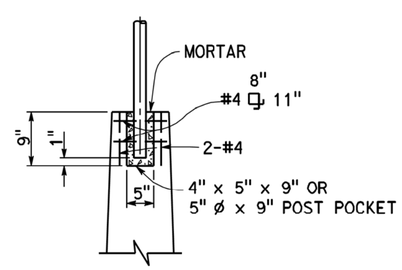

POST POCKET

NOTES:

1. Maximum distance between turnbuckles shall be 200'-0"±.
2. Intermediate turnbuckles to be placed in adjacent spans.
3. Cable shall not be spliced between intermediate turnbuckles and end posts.
4. Posts to be vertical.
5. Alignment of holes in posts may vary to conform to slope of top of retaining wall.
6. The Contractor shall verify all dependent dimensions in the field before ordering or fabricating any material.
7. Line posts shall be braced horizontally and trussed diagonally in both directions at intervals not to exceed 1000'.
8. Post pockets to be centered in top of wall.
9. Typical end spans, braced in both directions, shall be constructed at changes in line where the angle of deflection is 15° or more.
10. Provide thimbles at all cable loops.

STATE OF CALIFORNIA
DEPARTMENT OF TRANSPORTATION

CABLE RAILING

NO SCALE

RSP B11-47 DATED OCTOBER 21, 2011 SUPERSEDES STANDARD PLAN B11-47 DATED MAY 20, 2011 - PAGE 293 OF THE STANDARD PLANS BOOK DATED 2010.

REVISED STANDARD PLAN RSP B11-47

2010 REVISED STANDARD PLAN RSP B11-47

9-14-11

Dist	COUNTY	ROUTE	POST MILES TOTAL PROJECT	SHEET No.	TOTAL SHEETS
04	CC/Mrn	580	5.0/7.8, 0.0/3.3	456	579

REGISTERED CIVIL ENGINEER

July 15, 2016
PLANS APPROVAL DATE

REGISTERED PROFESSIONAL ENGINEER Tillat Satter No. C42892 Exp. 3-31-18 CIVIL STATE OF CALIFORNIA

THE STATE OF CALIFORNIA OR ITS OFFICERS OR AGENTS SHALL NOT BE RESPONSIBLE FOR THE ACCURACY OR COMPLETENESS OF SCANNED COPIES OF THIS PLAN SHEET.

TO ACCOMPANY PLANS DATED _____

2010 REVISED STANDARD PLAN RSP B11-51

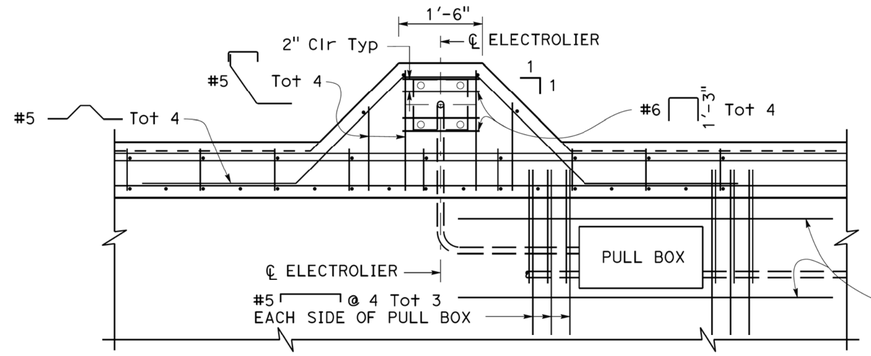

PLAN

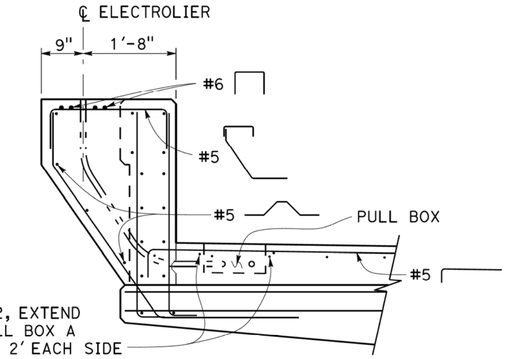

SECTION B-B

ELECTROLIER PEDESTAL DETAILS

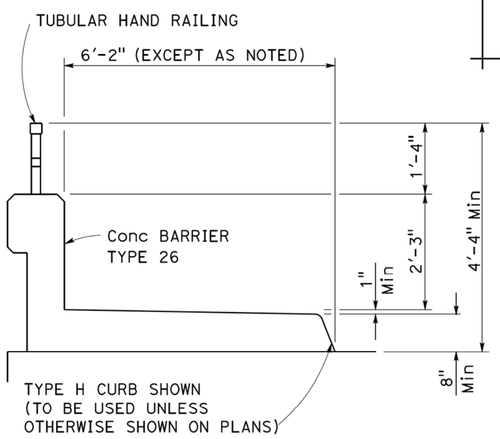

TYPICAL SECTION

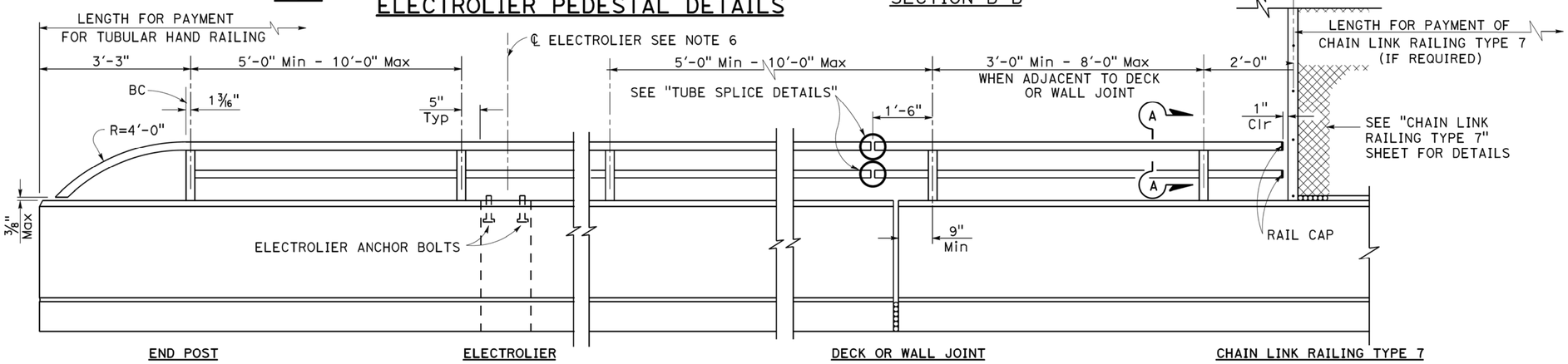

ELEVATION

RAIL CAP

TS 3" x 2" x 0.1875" similar

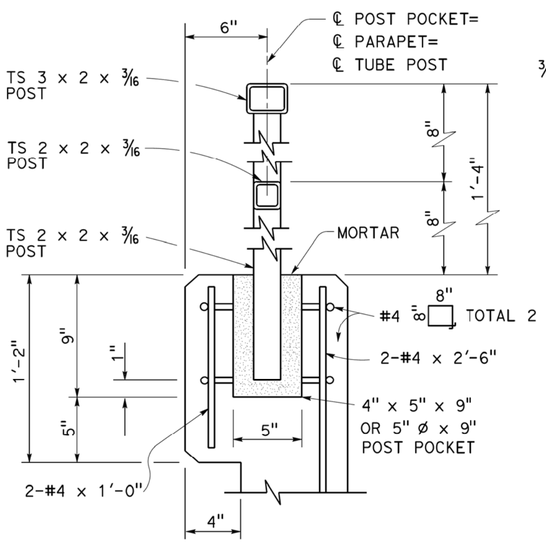

POST ANCHORAGE DETAILS

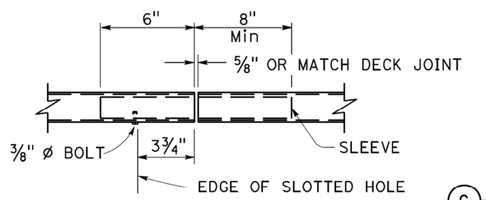

VIEW G-G

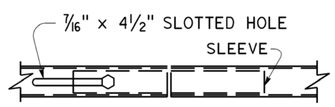

VIEW H-H

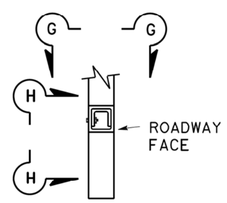

SECTION

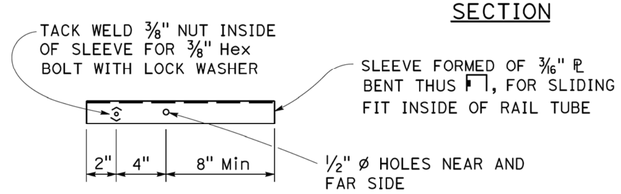

SLEEVE

TUBE SPLICE DETAILS

TS 3 x 2 x 3/16 similar

NOTES:

3/8" Nut tack welded to sleeve may be replaced by drilled and tapped hole in sleeve.

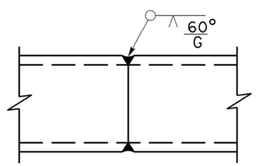

TUBE-WELDED SPLICE

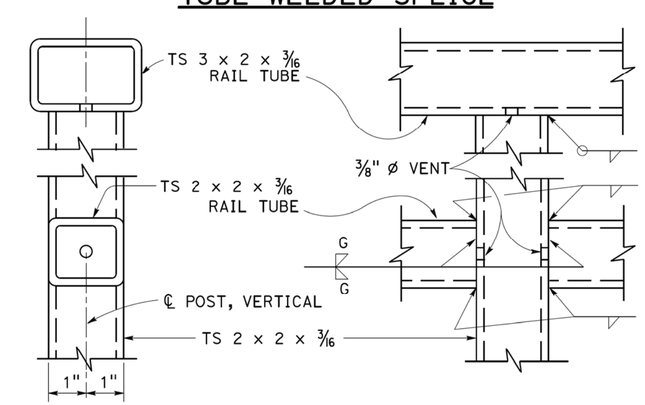

SECTION A-A

ELEVATION

RAIL CONNECTION DETAILS

NOTES:

1. Post shall be normal to railing.
2. Rail tubes shall be shop bent or fabricated to fit horizontal curve when radius is less than 950'.
3. Tube splices shall be located in the tubes spanning deck or wall joints. Increase joint width in tubes to match expansion joint width and increase sleeve length correspondingly.
4. Top rail tube shall be continuous over not less than two posts except a short post spacing is permitted near deck or wall joints, electroliers, or other rail discontinuities as noted.
5. For details and reinforcement not shown see Revised Standard Plan RSP B11-54.
6. For electrolier mounting details, see Revised Standard Plans RSP ES-6A and RSP ES-6B.

STATE OF CALIFORNIA
DEPARTMENT OF TRANSPORTATION

TUBULAR HAND RAILING

NO SCALE

RSP B11-51 DATED JULY 15, 2016 SUPERSEDES STANDARD PLAN B11-51 DATED MAY 20, 2011 - PAGE 294 OF THE STANDARD PLANS BOOK DATED 2010.

REVISED STANDARD PLAN RSP B11-51

7-7-16

Dist	COUNTY	ROUTE	POST MILES TOTAL PROJECT	SHEET No.	TOTAL SHEETS
04	CC/Mrn	580	5.0/7.8, 0.0/3.3	457	579

REGISTERED CIVIL ENGINEER

July 15, 2016
PLANS APPROVAL DATE

REGISTERED PROFESSIONAL ENGINEER Tillat Satter No. C42892 Exp. 3-31-18 CIVIL STATE OF CALIFORNIA

THE STATE OF CALIFORNIA OR ITS OFFICERS OR AGENTS SHALL NOT BE RESPONSIBLE FOR THE ACCURACY OR COMPLETENESS OF SCANNED COPIES OF THIS PLAN SHEET.

TO ACCOMPANY PLANS DATED _____

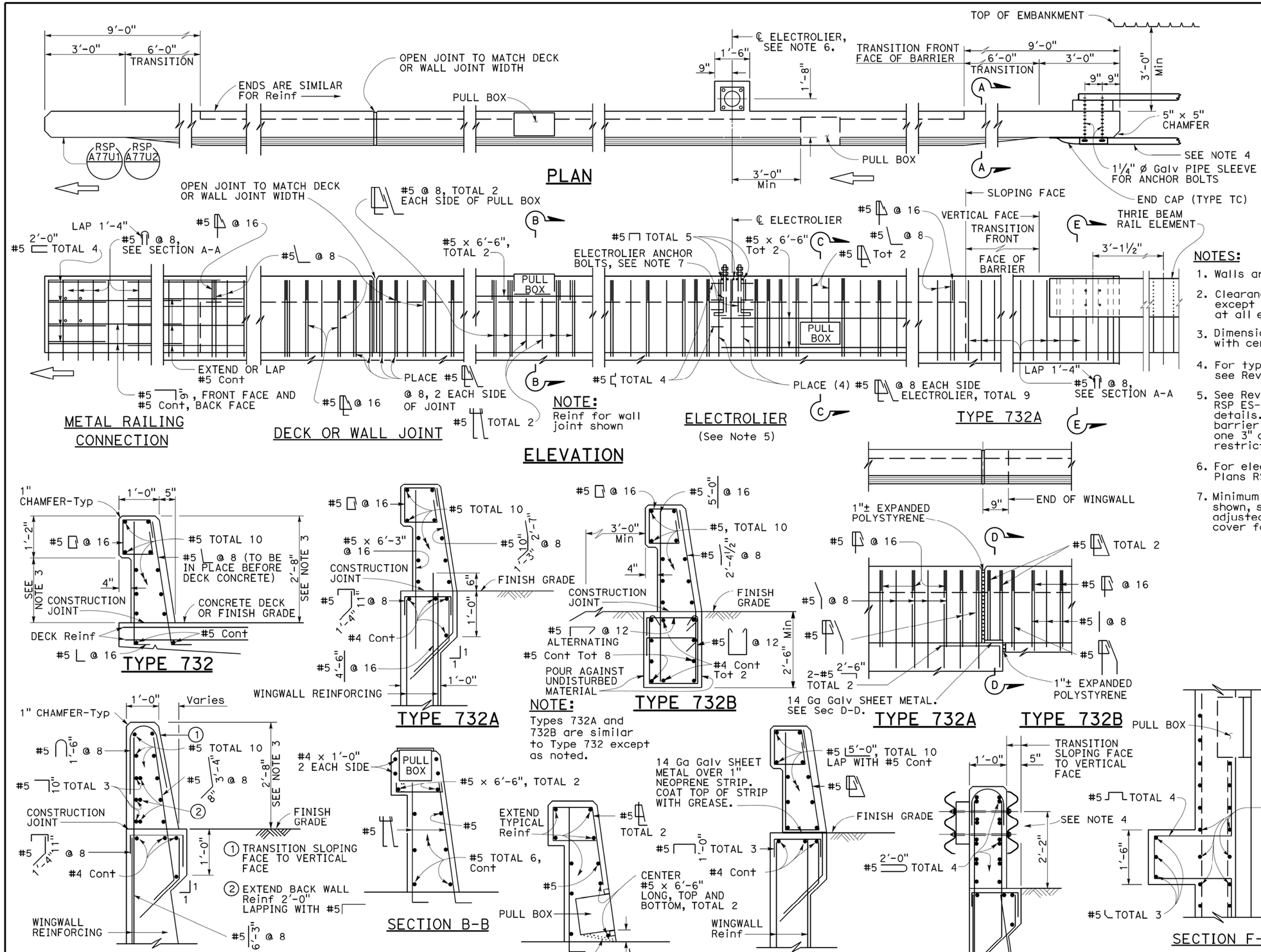

NOTES:

1. Walls are to be backfilled before barrier is placed.
2. Clearance to reinforcing steel in barrier to be 1", except as noted. Longitudinal reinforcement to stop at all expansion joints.
3. Dimensions may vary with roadway cross slope and with certain thickness of surfacing. See Project Plans.
4. For typical metal railing connection details not shown, see Revised Standard Plans RSP A77U1 and RSP A77U2.
5. See Revised Standard Plans RSP ES-9A, RSP ES-9B, RSP ES-9C, RSP ES-9D and RSP ES-9E for electrical details. The maximum number of conduits in the barrier is limited to two 2" conduits along with one 3" conduit. When a 3" conduit is used, it is restricted to the base of the barrier.
6. For electrolier mounting details, See Revised Standard Plans RSP ES-6A and RSP ES-6B.
7. Minimum concrete edge distance, to the reinforcing shown, shall be maintained. Edge distance may be adjusted to accommodate increase in concrete cover for architectual treatment.

STATE OF CALIFORNIA
DEPARTMENT OF TRANSPORTATION

CONCRETE BARRIER TYPE 732

NO SCALE

RSP B11-55 DATED JULY 15, 2016 SUPERSEDES RSP B11-55 DATED NOVEMBER 15, 2013 AND RSP B11-55 DATED JULY 19, 2013 AND STANDARD PLAN B11-55 DATED MAY 20, 2011 - PAGE 297 OF THE STANDARD PLANS BOOK DATED 2010.

REVISED STANDARD PLAN RSP B11-55

2010 REVISED STANDARD PLAN RSP B11-55

6-29-16

Dist	COUNTY	ROUTE	POST MILES TOTAL PROJECT	SHEET No.	TOTAL SHEETS
04	CC/Mrn	580	5.0/7.8, 0.0/3.3	458	579

REGISTERED CIVIL ENGINEER

April 20, 2012
PLANS APPROVAL DATE

REGISTERED PROFESSIONAL ENGINEER
Tillat Satter
No. C42892
Exp. 3-31-14
CIVIL
STATE OF CALIFORNIA

THE STATE OF CALIFORNIA OR ITS OFFICERS OR AGENTS SHALL NOT BE RESPONSIBLE FOR THE ACCURACY OR COMPLETENESS OF SCANNED COPIES OF THIS PLAN SHEET.

TO ACCOMPANY PLANS DATED _____

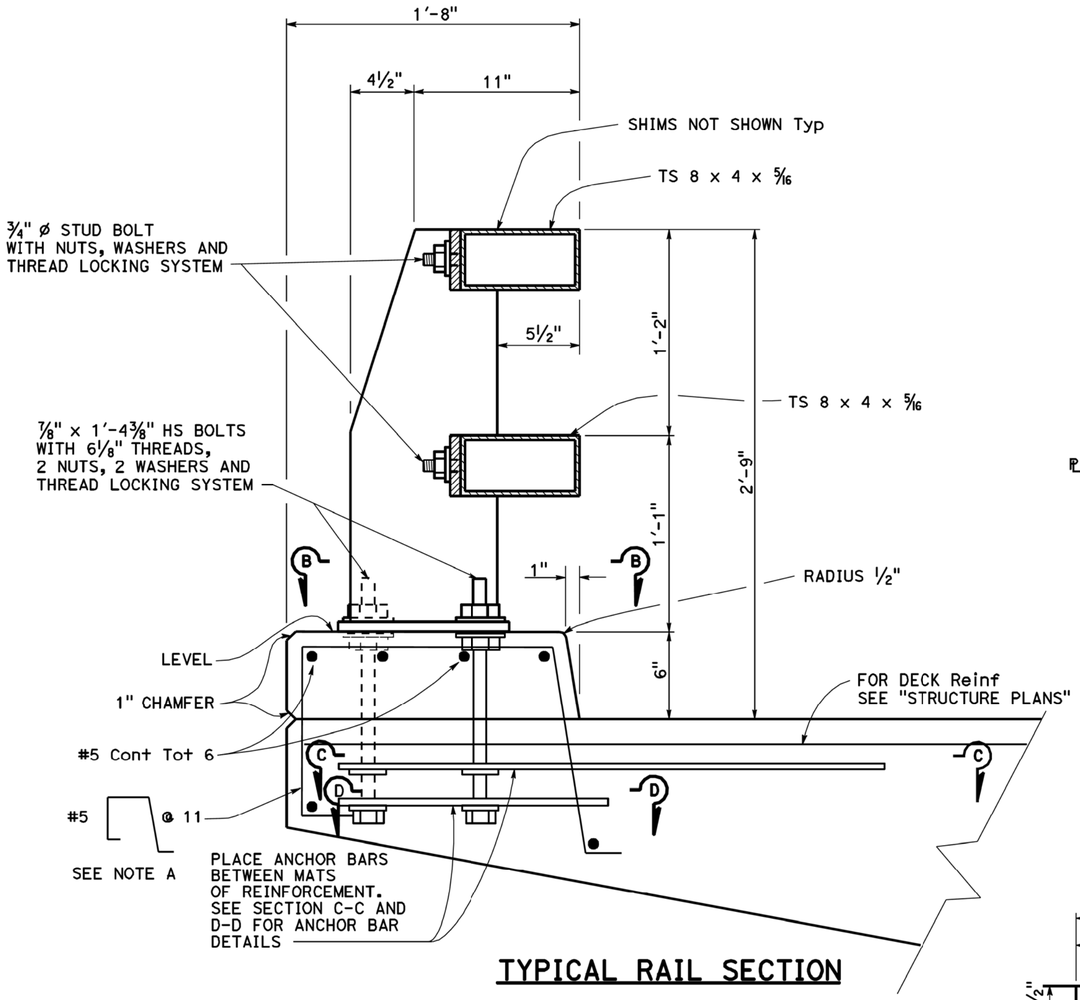

TYPICAL RAIL SECTION

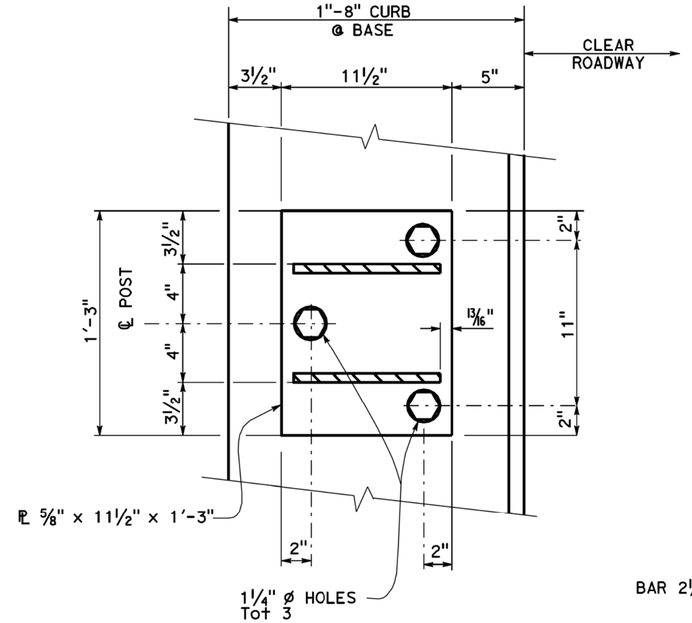

SECTION B-B

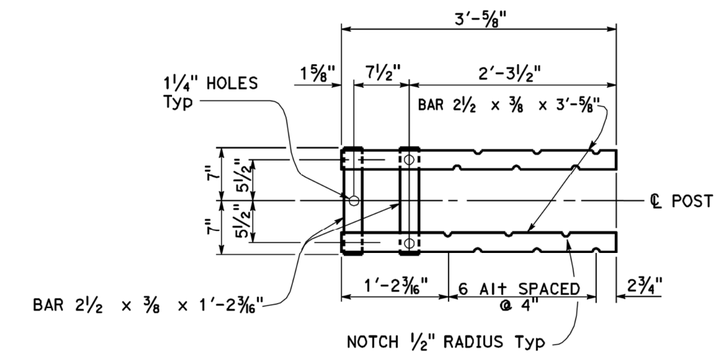

SECTION C-C
Top Anchorage

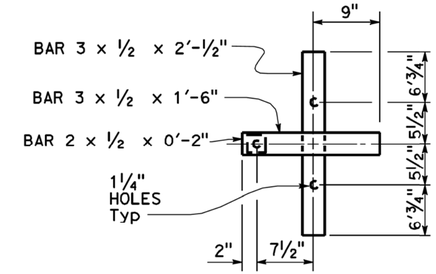

SECTION D-D
Lower Anchorage

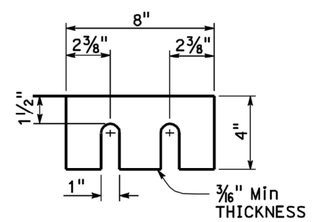

SHIMS REQUIRED FOR TOP AND BOTTOM RAIL

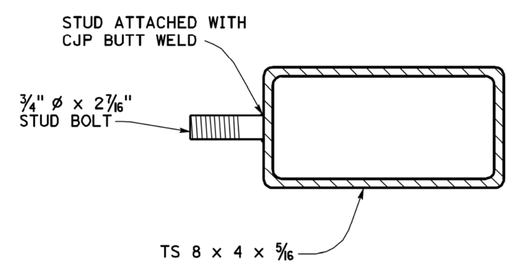

SECTION AT POST

STUD BOLT DETAIL

NOTE A

Adjust spacing to clear scupper opening by 2" if applicable.

STATE OF CALIFORNIA
DEPARTMENT OF TRANSPORTATION

CALIFORNIA ST-10 BRIDGE RAIL (SHEET 1 OF 3)

NO SCALE

RSP B11-68 DATED APRIL 20, 2012 SUPERSEDES STANDARD PLAN B11-68 DATED MAY 20, 2011 - PAGE 308 OF THE STANDARD PLANS BOOK DATED 2010.

REVISED STANDARD PLAN RSP B11-68

2010 REVISED STANDARD PLAN RSP B11-68

3-23-12

Dist	COUNTY	ROUTE	POST MILES TOTAL PROJECT	SHEET No.	TOTAL SHEETS
04	CC/Mrn	580	5.0/7.8, 0.0/3.3	459	579

REGISTERED CIVIL ENGINEER

July 19, 2013
PLANS APPROVAL DATE

REGISTERED PROFESSIONAL ENGINEER Tillat Satter No. C42892 Exp. 3-31-14 CIVIL STATE OF CALIFORNIA

THE STATE OF CALIFORNIA OR ITS OFFICERS OR AGENTS SHALL NOT BE RESPONSIBLE FOR THE ACCURACY OR COMPLETENESS OF SCANNED COPIES OF THIS PLAN SHEET.

TO ACCOMPANY PLANS DATED _____

2010 REVISED STANDARD PLAN RSP B11-70

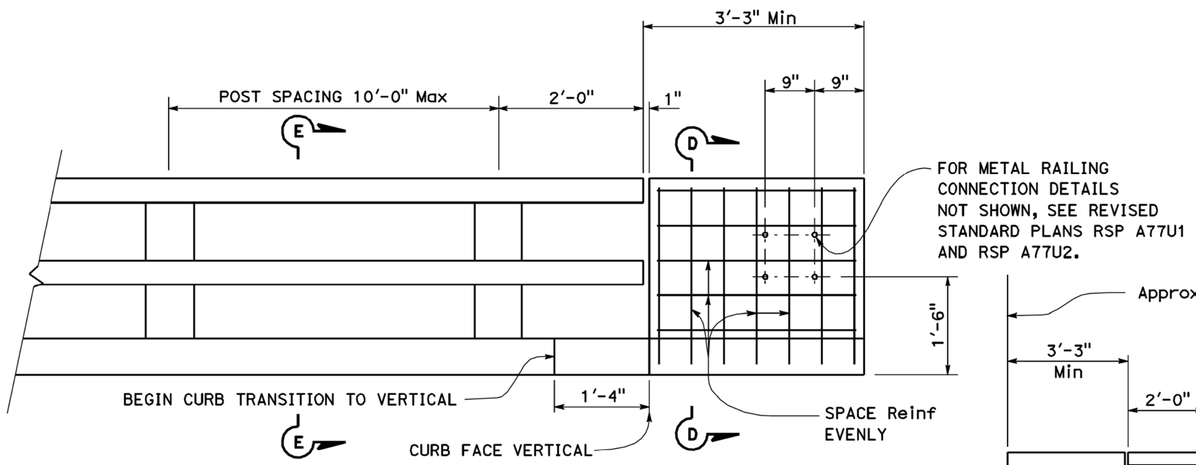

END OF RAILING ELEVATION

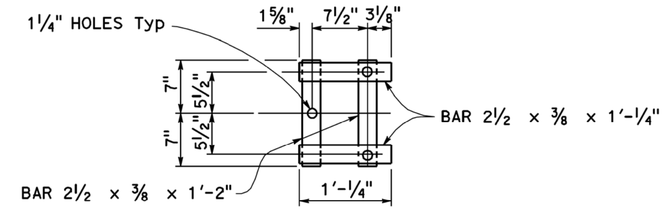

WALL ANCHOR PLATE DETAIL

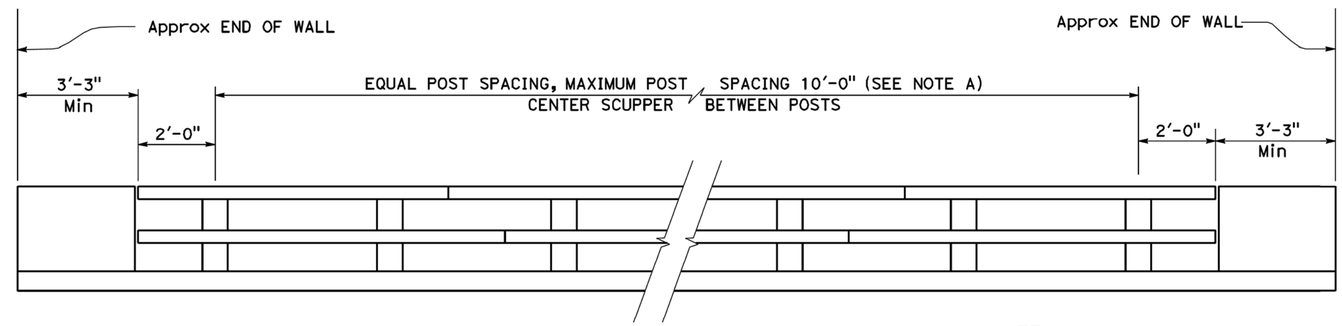

BRIDGE RAILING ELEVATION

NOTE A:

Post spacing and/or block length to be adjusted to fit bridge length or wingwall length.

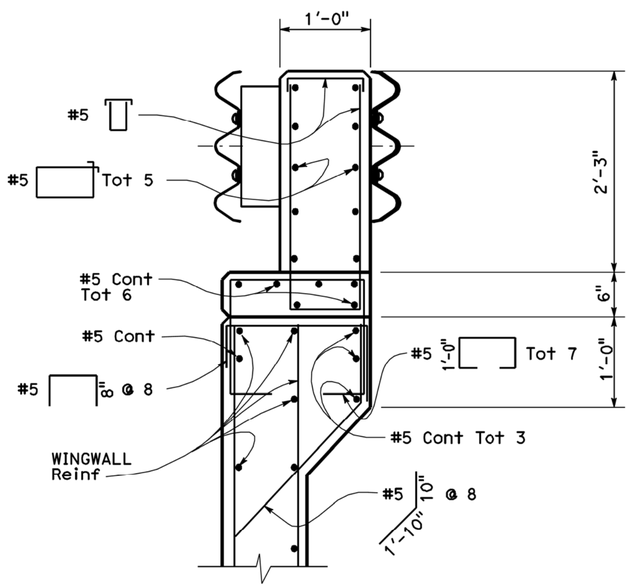

SECTION D-D

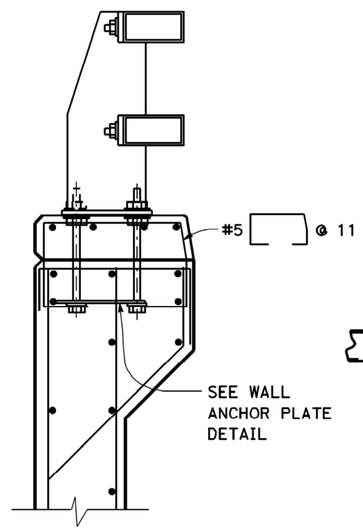

SECTION E-E

Reinf same as for Section D-D except as noted.

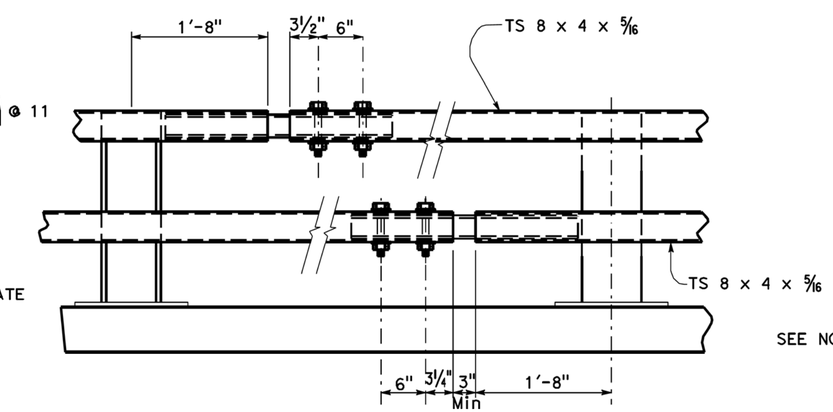

EXPANSION SPLICE

NOTE B:

Use ¾" * x 5⅝"
Hs bolts with washers, fully tensioned.
1" holes in rail Typ

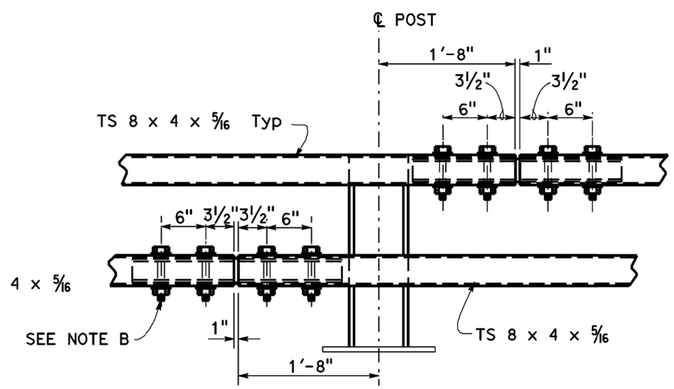

STANDARD SPLICE

STATE OF CALIFORNIA
DEPARTMENT OF TRANSPORTATION

CALIFORNIA ST-10 BRIDGE RAIL (SHEET 3 OF 3)

NO SCALE

RSP B11-70 DATED JULY 19, 2013 SUPERSEDES STANDARD PLAN B11-70 DATED MAY 20, 2011 - PAGE 310 OF THE STANDARD PLANS BOOK DATED 2010.

REVISED STANDARD PLAN RSP B11-70

6-27-13

Dist	COUNTY	ROUTE	POST MILES TOTAL PROJECT	SHEET No.	TOTAL SHEETS
04	CC/Mrn	580	5.0/7.8, 0.0/3.3	460	579

REGISTERED CIVIL ENGINEER

July 19, 2013
PLANS APPROVAL DATE

REGISTERED PROFESSIONAL ENGINEER Stanley P. Johnson No. C57793 Exp. 3-31-14 CIVIL STATE OF CALIFORNIA

THE STATE OF CALIFORNIA OR ITS OFFICERS OR AGENTS SHALL NOT BE RESPONSIBLE FOR THE ACCURACY OR COMPLETENESS OF SCANNED COPIES OF THIS PLAN SHEET.

TO ACCOMPANY PLANS DATED _____

TABLE XV

POST TYPE	PIPE NPS	PIPE THICKNESS	CAP PLATE SIZE FOR CHORD L's 5 x 5	CAP PLATE SIZE FOR CHORD L's 6 x 6	ROUND PEDESTAL PEDESTAL SIZE Dia	ROUND PEDESTAL VERTICAL ⌋-BARS EQUALLY SPACED TOTAL	ROUND PEDESTAL VERTICAL ⌋-BARS BAR SIZE	ROUND PEDESTAL SPIRAL BAR SIZE	ROUND PEDESTAL SPIRAL PITCH	SQUARE PEDESTAL PEDESTAL SIZE SQUARE	SQUARE PEDESTAL VERTICAL ⌋-BARS EQUALLY SPACED TOTAL	SQUARE PEDESTAL VERTICAL ⌋-BARS BAR SIZE	SQUARE PEDESTAL VERTICAL ⌋-BARS # OF BARS EA FACE	SQUARE PEDESTAL HOOP BAR SIZE	SQUARE PEDESTAL HOOP SPACING	SPREAD FOOTING (SEE NOTE 2)	SPREAD FOOTING REINFORCEMENT WIDTH TOP	SPREAD FOOTING REINFORCEMENT WIDTH BOTTOM	SPREAD FOOTING REINFORCEMENT LONGITUDINAL TOP	SPREAD FOOTING REINFORCEMENT LONGITUDINAL BOTTOM	SPREAD FOOTING REINFORCEMENT FOOTING STIRRUPS
II	14	1/2"	2'-0" x 2'-0" x 1"	2'-2" x 2'-2" x 1"	5'-3"	16	#10	#5	3 1/2"	5'-3"	16	#10	5	#5	3 1/2"	12'-0" x 14'-0" x 2'-6"	14-#6	14-#7	13-#9	13-#9	#5 @ 12
III	16		2'-2" x 2'-2" x 1"	2'-4" x 2'-4" x 1"												12'-0" x 14'-0" x 2'-6"	15-#6	15-#7			
IV	18		2'-4" x 2'-4" x 1"	2'-6" x 2'-6" x 1"												12'-0" x 14'-0" x 2'-6"	15-#6	15-#7			
V	20		2'-6" x 2'-6" x 1"	2'-8" x 2'-8" x 1"												13'-0" x 14'-0" x 2'-6"	15-#6	15-#7	14-#9	14-#9	
VI	24		2'-10" x 2'-10" x 1"	3'-0" x 3'-0" x 1"	5'-9"		#11			5'-9"		#11				13'-0" x 16'-0" x 2'-6"	17-#7	17-#7		14-#11	
VII	24	3/4"														13'-0" x 17'-0" x 2'-6"	18-#7	18-#7			
VIII	24	31/32"														13'-0" x 18'-0" x 2'-6"	19-#7	19-#7			
IX	24	31/32"														13'-0" x 18'-0" x 2'-6"	19-#7	19-#7			

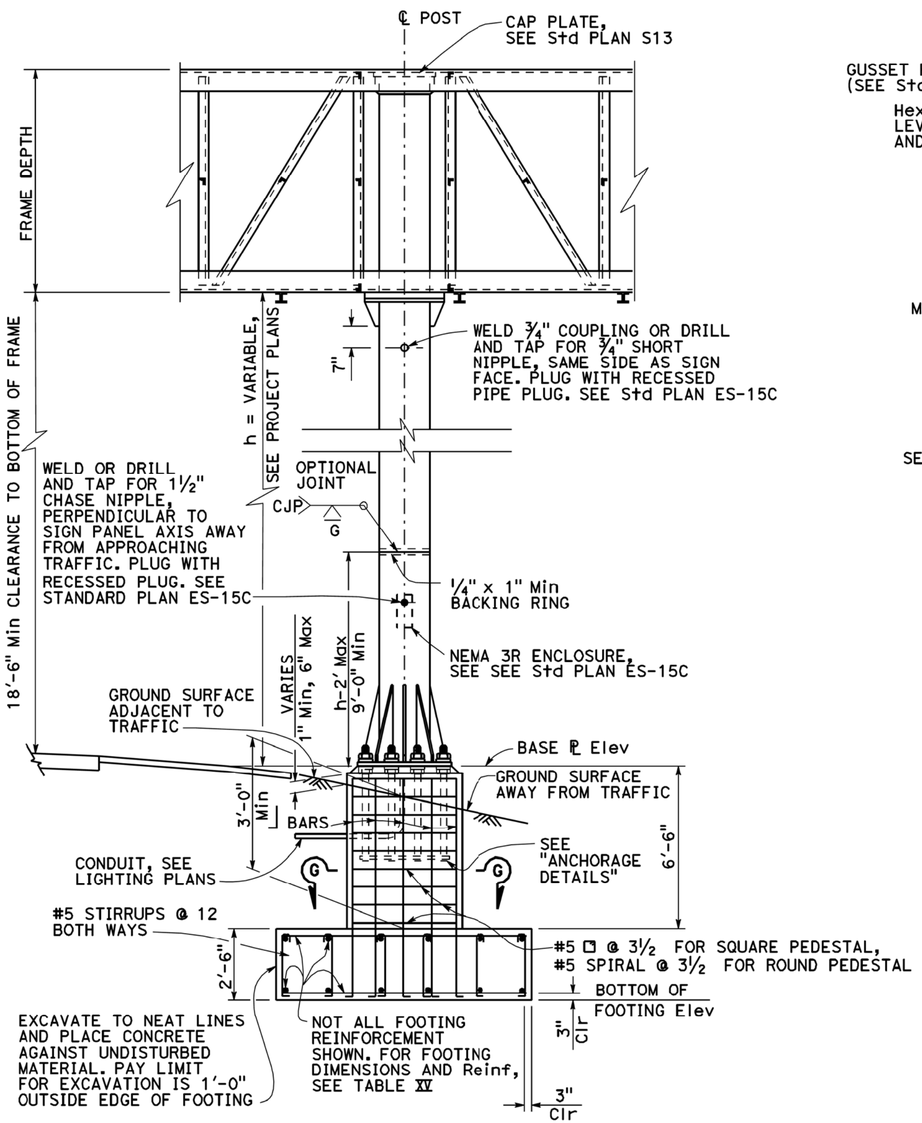

ELEVATION
See Note 5

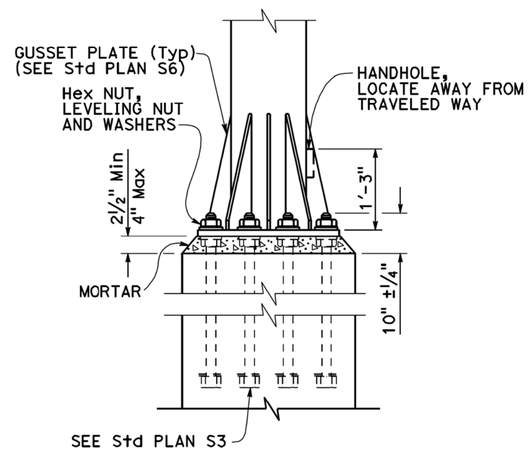

ELEVATION

ANCHORAGE DETAILS

NOTES:

1. For "General Notes", see Revised Standard Plan RSP S1.
2. Longer side of footing (longitudinal) shall be normal to axis of sign.
3. Backfill shall be in place prior to erection of post.
4. Thread upper 10" of anchor bolts and galvanize upper 1'-0".
5. Spread footing with square pedestal foundation shown, use Pile Foundation when shown on the Project Plans. For pile foundation details, see Standard Plan S8.
6. Anchor plates may be retained with hexagon nut or formed head as alternatives to details shown.
7. On single post sign structures, the post shall be raked out of plumb, with the use of the leveling nuts to make the bottom of the sign frame level.
8. At final position of post all top and bottom nuts shall be tightened against base plate.
9. When foundation is located on a steep slope with exposed face of concrete adjacent to traffic, see "Detail C" on Standard Plan S8, as applicable.
10. Slope protection required when indicated on the Project Plans.

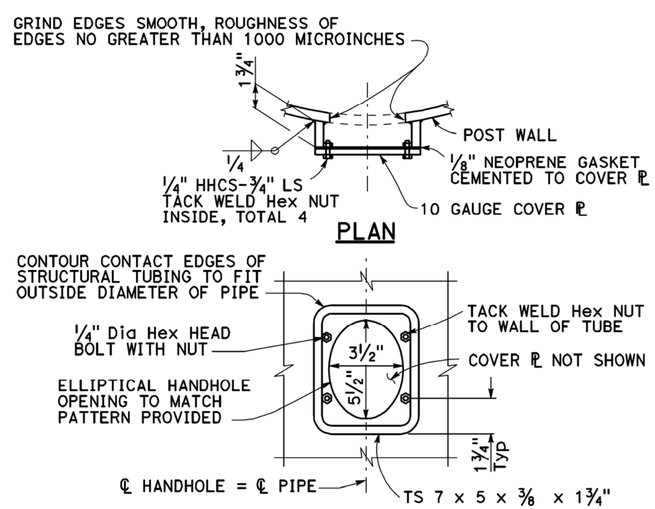

ELEVATION

TYPICAL DETAILS OF HANDHOLE AND COVER

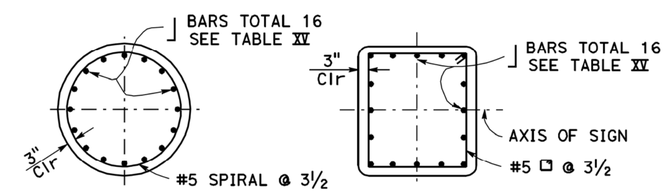

SECTION G-G
ROUND PEDESTAL

SECTION G-G
SQUARE PEDESTAL

STATE OF CALIFORNIA
DEPARTMENT OF TRANSPORTATION

OVERHEAD SIGNS-TRUSS SINGLE POST TYPE POST TYPES II THROUGH IX

NO SCALE

RSP S2 DATED JULY 19, 2013 SUPERSEDES STANDARD PLAN S2
DATED MAY 20, 2011 - PAGE 335 OF THE STANDARD PLANS BOOK DATED 2010.

REVISED STANDARD PLAN RSP S2

2010 REVISED STANDARD PLAN RSP S2

7-11-13

Dist	COUNTY	ROUTE	POST MILES TOTAL PROJECT	SHEET No.	TOTAL SHEETS
04	CC/Mrn	580	5.0/7.8, 0.0/3.3	461	579

Theresa Gabriel
REGISTERED ELECTRICAL ENGINEER

October 30, 2015
PLANS APPROVAL DATE

REGISTERED PROFESSIONAL ENGINEER Theresa Aziz Gabriel No. E15129 Exp. 6-30-16 ELECTRICAL STATE OF CALIFORNIA

THE STATE OF CALIFORNIA OR ITS OFFICERS OR AGENTS SHALL NOT BE RESPONSIBLE FOR THE ACCURACY OR COMPLETENESS OF SCANNED COPIES OF THIS PLAN SHEET.

TO ACCOMPANY PLANS DATED _____

LEGEND:

- AB — ABANDON. IF APPLIED TO CONDUIT, REMOVE CONDUCTORS
- BC — INSTALL PULL BOX IN EXISTING CONDUIT RUN
- BP — PEDESTRIAN BARRICADE, TYPE AS INDICATED ON PLAN
- CB — INSTALL CONDUIT INTO EXISTING PULL BOX
- CC — CONNECT NEW AND EXISTING CONDUIT. REMOVE EXISTING CONDUCTORS AND INSTALL CONDUCTORS AS INDICATED
- CF — CONDUIT TO REMAIN FOR FUTURE USE. REMOVE CONDUCTORS. INSTALL PULL TAPE
- DH — DETECTOR HANDHOLE
- FA — FOUNDATION TO BE ABANDONED
- IS — INSTALL SIGN ON SIGNAL MAST ARM
- NS — NO SLIP BASE ON STANDARD
- PEC — PHOTOELECTRIC CONTROL
- PEU — PHOTOELECTRIC UNIT
- RC — EQUIPMENT OR MATERIAL TO BE REMOVED AND BECOME THE PROPERTY OF THE CONTRACTOR
- RE — REMOVE ELECTROLIER, FUSES AND BALLAST. TAPE ENDS OF CONDUCTORS
- RL — RELOCATE EQUIPMENT
- RR — REMOVE AND REUSE EQUIPMENT
- RS — REMOVE AND SALVAGE EQUIPMENT
- SC — SPLICE NEW TO EXISTING CONDUCTORS
- SD — SERVICE DISCONNECT
- TSP — TELEPHONE SERVICE POINT

ABBREVIATIONS

AC+	UNDERGROUNDED CONDUCTOR
APS	ACCESSIBLE PEDESTRIAN SIGNAL
Batt	BATTERY
BBS	BATTERY BACKUP SYSTEM
BC	BOLT CIRCLE
Blk	BLACK
BP	BYPASS
BPB	BICYCLE PUSH BUTTON
C	CONDUIT
CB	CIRCUIT BREAKER
CCTV	CLOSED CIRCUIT TELEVISION
Ckt	CIRCUIT
CMS	CHANGEABLE MESSAGE SIGN
Ctid	CALTRANS IDENTIFICATION
Comm	COMMUNICATION
Cntl	CONTROL
DF	DEPARTMENT-FURNISHED
DLC	LOOP DETECTOR LEAD-IN CABLE
EMS	EXTINGUISHABLE MESSAGE SIGN
EVUC	EMERGENCY VEHICLE UNIT CABLE
EVUD	EMERGENCY VEHICLE UNIT DETECTOR
FB	FLASHING BEACON
FBCA	FLASHING BEACON CONTROL ASSEMBLY
FBS	FLASHING BEACON WITH SLIP BASE
FO	FIBER OPTIC
G	EQUIPMENT GROUNDING CONDUCTOR
GB	GROUND BUS
GFCI	GROUND FAULT CIRCUIT INTERRUPTER
Grn	GREEN
HAR	HIGHWAY ADVISORY RADIO
Hex	HEXAGONAL
HPS	HIGH PRESSURE SODIUM
IISNS	INTERNALLY ILLUMINATED STREET NAME SIGN
ISL	INDUCTION SIGN LIGHTING
LED	LIGHT EMITTING DIODE
LMA	LUMINAIRE MAST ARM
LPS	LOW PRESSURE SODIUM
Ltg	LIGHTING
Lum	LUMINAIRE
M	METERED
MAT	MAST ARM MOUNTING TOP ATTACHMENT
MAS	MAST ARM MOUNTING SIDE ATTACHMENT
MBPS	MANUAL BYPASS SWITCH
M/M	MULTIPLE TO MULTIPLE TRANSFORMER
Mtg	MOUNTING
MV	MERCURY VAPOR LIGHTING FIXTURE
MVDS	MICROWAVE VEHICLE DETECTION SYSTEM
N	NEUTRAL (GROUNDED CONDUCTOR)
NB	NEUTRAL BUS
NC	NORMALLY CLOSE
NO	NORMALLY OPEN
P	CIRCUIT BREAKER'S POLE
PB	PULL BOX
PBA	PUSH BUTTON ASSEMBLY
PEC	PHOTOELECTRIC CONTROL
Ped	PEDESTRIAN
PEU	PHOTOELECTRIC UNIT
PT	CONDUIT WITH PULL TAPE
PTR	POWER TRANSFER RELAY
RE	RELOCATED EQUIPMENT
RM	RAMP METERING
RWIS	ROADSIDE WEATHER INFORMATION SYSTEM
SB	SLIP BASE
SIC	SIGNAL INTERCONNECT CABLE
Sig	SIGNAL
SMA	SIGNAL MAST ARM
SNS	STREET NAME SIGN
SP	SERVICE POINT
TB	TERMINAL BOARD
TDC	TELEPHONE DEMARCATION CABINET
Temp	TEMPERATURE
TMS	TRAFFIC MONITORING STATION
TOS	TRAFFIC OPERATIONS SYSTEM
UPS	UNINTERRUPTABLE POWER SUPPLY
UPSC	UNINTERRUPTABLE POWER SUPPLY CONTROLLER
Veh	VEHICLE
VIVDS	VIDEO IMAGE VEHICLE DETECTION SYSTEM
Wht	WHITE
WIM	WEIGH-IN-MOTION
Xfmr	TRANSFORMER

SOFFIT AND WALL-MOUNTED LUMINAIRES

- PENDANT SOFFIT LUMINAIRE, 70 W HPS UNLESS OTHERWISE SPECIFIED
- FLUSH-MOUNTED SOFFIT LUMINAIRE, 70 W HPS UNLESS OTHERWISE SPECIFIED
- WALL-MOUNTED LUMINAIRE, 70 W HPS UNLESS OTHERWISE SPECIFIED
- EXISTING SOFFIT OR WALL-MOUNTED LUMINAIRE TO REMAIN UNMODIFIED
- EXISTING SOFFIT OR WALL-MOUNTED LUMINAIRE TO BE MODIFIED AS SPECIFIED

NOTE:
Arrow indicates "street side" of luminaire.

COMMONLY USED SYMBOLS FOR UNITED STATES CUSTOMARY UNITS OF MEASUREMENT:

SYMBOL	DEFINITIONS
Ω	OHMS
min	MINUTE
s	SECOND
bps	BITS PER SECOND
Bps	BYTES PER SECOND
A	AMPERE
V	VOLT
V(dc)	VOLT (DIRECT CURRENT)
V(ac)	VOLT (ALTERNATING CURRENT)
FC	FOOT - CANDLE
W	WATTS
VA	VOLT-AMPERE
M	MEGA
k	KILO
m	MILLI
μ	MICRO
P	PICO
Hz	HERTZ

MISCELLANEOUS ELECTROLIERS

NEW	EXISTING	
		LUMINAIRE ON WOOD POLE
		NON-STANDARD ELECTROLIER (SEE PROJECT LEGEND)
		CITY ELECTROLIER
		ELECTROLIER FOUNDATION (FUTURE INSTALLATION)

NOTES:

1. LED luminaires shall be 235 W when installed on Type 21, 21D, 30, 31 and 32 Standards, unless otherwise specified. LED luminaires shall be 165 W when installed on other type standards or poles, unless otherwise specified.
2. Luminaires shall be the cutoff type, ANSI Type III medium cutoff lighting distribution, unless otherwise specified.

STANDARD ELECTROLIER

NEW	EXISTING	STANDARD TYPE
		15
		15D
		15 STRUCTURE
		15D STRUCTURE
		21
		21D
		21 STRUCTURE
		21D STRUCTURE
		30
		31
		32

STATE OF CALIFORNIA
DEPARTMENT OF TRANSPORTATION

ELECTRICAL SYSTEMS (LEGEND AND ABBREVIATIONS)

NO SCALE

RSP ES-1A DATED OCTOBER 30, 2015 SUPERSEDES RSP ES-1A DATED JULY 19, 2013 AND STANDARD PLAN ES-1A DATED MAY 20, 2011 - PAGE 425 OF THE STANDARD PLANS BOOK DATED 2010.

REVISED STANDARD PLAN RSP ES-1A

2010 REVISED STANDARD PLAN RSP ES-1A

9-29-15

Dist	COUNTY	ROUTE	POST MILES TOTAL PROJECT	SHEET No.	TOTAL SHEETS
04	CC/Mrn	580	5.0/7.8, 0.0/3.3	462	579

Theresa Gabriel
REGISTERED ELECTRICAL ENGINEER

October 30, 2015
PLANS APPROVAL DATE

REGISTERED PROFESSIONAL ENGINEER Theresa Aziz Gabriel No. E15129 Exp. 6-30-16 ELECTRICAL STATE OF CALIFORNIA

THE STATE OF CALIFORNIA OR ITS OFFICERS OR AGENTS SHALL NOT BE RESPONSIBLE FOR THE ACCURACY OR COMPLETENESS OF SCANNED COPIES OF THIS PLAN SHEET.

TO ACCOMPANY PLANS DATED _____

CONDUIT

NEW	EXISTING	
		LIGHTING CONDUIT, UNLESS OTHERWISE INDICATED OR NOTED
		TRAFFIC SIGNAL CONDUIT
C	c	COMMUNICATION CONDUIT
T	t	TELEPHONE CONDUIT
F	f	FIRE ALARM CONDUIT
FO	fo	FIBER OPTIC CONDUIT
		CONDUIT TERMINATION
R	r	CONDUIT RISER ATTACHED TO THE STRUCTURE OR SERVICE POLE

SERVICE EQUIPMENT

NEW	EXISTING	
OH	oh	OVERHEAD LINES
U	U	WOOD POLE, "U" INDICATES UTILITY OWNED
		POLE GUY WITH ANCHOR
		UTILITY TRANSFORMER - GROUND MOUNTED
III	III	SERVICE EQUIPMENT ENCLOSURE TYPE. DOOR INDICATES FRONT OF ENCLOSURE
T	t	TELEPHONE DEMARCATION CABINET

POLE-MOUNTED SERVICE DESIGNATION

TYPE H SERVICE, 28'-10" — TYPE OF INSTALLATION AND POLE HEIGHT ABOVE GRADE

FLASHING BEACON

NEW	EXISTING	
R	R	FLASHING BEACON (ONE VEHICLE SIGNAL HEAD WITH BACKPLATE AND VISOR) "R" INDICATES RED INDICATION, "Y" INDICATES YELLOW INDICATION
Y Y	Y Y	FLASHING BEACON WITH TYPE 15-FBS STANDARD AND A SIGN.
R R	R R	FLASHING BEACON WITH TYPES 9, 9A OR 9B SIGN UNLESS OTHERWISE SPECIFIED OR INDICATED

SIGNAL EQUIPMENT

NEW	EXISTING	
		PEDESTRIAN SIGNAL HEAD
		PUSH BUTTON ASSEMBLY POST
		PEDESTRIAN BARRICADE
		VEHICLE SIGNAL HEAD (WITH BACKPLATE AND 3-SECTIONS: RED, YELLOW AND GREEN)
		VEHICLE SIGNAL HEAD WITH ANGLE VISOR
PV	PV	MODIFICATIONS OF BASIC SYMBOL: "L" INDICATES ALL NON-ARROW SECTIONS LOUVERED "LG" INDICATES LOUVERED GREEN SECTION ONLY "PV" INDICATES ALL 12" SECTIONS PROGRAMMED VISIBILITY "8" INDICATES ALL 8" SECTIONS (ONLY WHEN SPECIFIED)
		VEHICLE SIGNAL HEAD CONSISTING OF RED, YELLOW AND GREEN LEFT ARROW SECTIONS
		VEHICLE SIGNAL HEAD CONSISTING OF RED AND YELLOW SECTIONS WITH AN UP GREEN ARROW SECTION
		VEHICLE SIGNAL HEAD (5 SECTION) CONSISTING OF RED, YELLOW AND GREEN SECTIONS WITH YELLOW AND GREEN RIGHT ARROW SECTIONS
		TYPE 15TS STANDARD WITH VEHICLE SIGNAL HEAD AND LUMINAIRE
		TYPE 21TS STANDARD WITH VEHICLE SIGNAL HEAD AND LUMINAIRE
		STANDARD WITH LUMINAIRE AND SIGNAL MAST ARMS AND ATTACHED VEHICLE SIGNAL HEADS
		TYPE 1 STANDARD WITH ATTACHED VEHICLE SIGNAL HEADS
		STANDARD WITH A SIGNAL MAST ARM, ATTACHED VEHICLE SIGNAL HEADS AND INTERNALLY ILLUMINATED STREET NAME SIGN
		CONTROLLER ASSEMBLY. DOOR INDICATES FRONT OF CABINET

SIGNAL EQUIPMENT Cont

NEW	EXISTING	
		GUARD POST
		TYPE 1 STANDARD WITH RAMP METERING SIGN
		OPTICAL DETECTOR FOR THE EMERGENCY VEHICLE DETECTION

NOTES:

1. All signal sections shall be 12" unless shown otherwise.
2. Signal heads shall be provided with backplates unless shown otherwise.

ILLUMINATED OVERHEAD SIGN

NEW	EXISTING	
		SINGLE POST, SINGLE ILLUMINATED SIGN, BALANCED BUTTERFLY
		SINGLE POST, DOUBLE ILLUMINATED SIGN, BALANCED BUTTERFLY
		SINGLE POST, SINGLE ILLUMINATED SIGN, FULL CANTILEVER
		DOUBLE POST, SINGLE ILLUMINATED SIGN
		SINGLE ILLUMINATED SIGN MOUNTED ON STRUCTURE
		DOUBLE POST, SINGLE ILLUMINATED SIGN WITH ELECTROLIER

STATE OF CALIFORNIA
DEPARTMENT OF TRANSPORTATION

ELECTRICAL SYSTEMS (LEGEND AND ABBREVIATIONS)

NO SCALE

RSP ES-1B DATED OCTOBER 30, 2015 SUPERSEDES RSP ES-1B DATED JULY 19, 2013 AND STANDARD PLAN ES-1B DATED MAY 20, 2011 - PAGE 426 OF THE STANDARD PLANS BOOK DATED 2010.

REVISED STANDARD PLAN RSP ES-1B

2010 REVISED STANDARD PLAN RSP ES-1B

8-19-15

Dist	COUNTY	ROUTE	POST MILES TOTAL PROJECT	SHEET No.	TOTAL SHEETS
04	CC/Mrn	580	5.0/7.8, 0.0/3.3	463	579

Theresa Gabriel
REGISTERED ELECTRICAL ENGINEER

April 15, 2016
PLANS APPROVAL DATE

REGISTERED PROFESSIONAL ENGINEER Theresa Aziz Gabriel No. E15129 Exp. 6-30-16 ELECTRICAL STATE OF CALIFORNIA

THE STATE OF CALIFORNIA OR ITS OFFICERS OR AGENTS SHALL NOT BE RESPONSIBLE FOR THE ACCURACY OR COMPLETENESS OF SCANNED COPIES OF THIS PLAN SHEET.

TO ACCOMPANY PLANS DATED _____

EQUIPMENT IDENTIFICATION

ILLUMINATED SIGN IDENTIFICATION:

SIGN No. 12345

10 ISL SCI 1.0

- SIGN EQUIPMENT IDENTIFICATION CHARACTERS - PLACE ON POST OR STRUCTURE
- TRANSFORMER RATING (kVA)
- LIGHTING CONTROL TYPE
- NUMBER AND TYPE OF FIXTURES

} DO NOT PLACE ON STANDARD OR STRUCTURE

ELECTROLIER OR EQUIPMENT IDENTIFICATION:

L2745 - 15'-0"

- MAST ARM LENGTH, IF SHOWN. DO NOT PLACE ON STANDARD OR STRUCTURE
- EQUIPMENT IDENTIFICATION CHARACTERS - PLACE ON STANDARD OR STRUCTURE. EXISTING EQUIPMENT IDENTIFICATION CHARACTERS ARE SHOWN IN PARENTHESIS

CONDUIT AND CONDUCTOR IDENTIFICATION:

1½"C, 2#10, 15#14, 2 DLC, 12P#18

- PAIR
- NUM BER AND SIZE OF CONDUCTORS AND CABLES
- SIZE OF CONDUIT IN INCHES

Ø1, Ø2, Ø2P, etc.	TRAFFIC PHASE IDENTIFICATION FOR SIGNALS, DETECTORS AND PHASE DIAGRAMS
1 2 3	LEGEND NUMBERS
A B C	EQUIPMENT, SIGNAL POLES, INSTALLATION OR ITEMS
1 2 3	CONDUIT RUN NUMBERS

SIGNAL AND LIGHTING STANDARD (TYPICAL DESIGNATION):

19A - 3 - 100

- WIND VELOCITY = 100 mph
- CASE 3 ARM LOADING
- STANDARD TYPE
- STANDARD PLAN SHEET NUMBER
- DETAIL, NUMBER, SECTION, TYPE OR ELEVATION

MISCELLANEOUS EQUIPMENT

NEW	EXISTING	
CMS	cms	CHANGEABLE MESSAGE SIGN
		CLOSED CIRCUIT TELEVISION CAMERA
		HIGHWAY ADVISORY RADIO POLE AND ANTENNA
EMS	ems	LED EXTINGUISHABLE MESSAGE SIGN
M V	m v	DETECTION DEVICE M = MICROWAVE SENSOR V = VIDEO IMAGE SENSOR

WIRING DIAGRAM LEGEND

- EXTERNAL CONDUCTOR
- CONDUCTOR OR BUS
- TIE POINT
- CONTACTOR COIL
- CONTACTOR, NO CONTACT
- TERMINAL BLOCKS
- CONTACTOR, NC CONTACT
- ENCLOSURE BOND
- GROUNDING ELECTRODE
- CIRCUIT BREAKER
- RECEPTACLE

PULL BOXES

NEW	EXISTING	
		PULL BOX, No. 5 UNLESS OTHERWISE INDICATED OR NOTED
3	9A(21)	PULL BOX, ADDITIONAL DESIGNATIONS OR DESCRIPTIONS

3 No. 3½ PULL BOX
5 No. 5 PULL BOX
6 No. 6 PULL BOX
7 No. 7 PULL BOX (CEILING)
8 No. 8 PULL BOX
9 No. 9 PULL BOX (STRUCTURE)
9A No. 9A PULL BOX (STRUCTURE)

(C) COMMUNICATIONS PULL BOX
(E) PULL BOX WITH EXTENSION
(S) SPRINKLER CONTROL PULL BOX
(21) ANCHOR BOLTS AND CONDUIT FOR FUTURE INSTALLATION OF TYPE 21 STANDARD
(T) TRAFFIC PULL BOX

VEHICLE DETECTORS

5 J 9 U

- VEHICLE DETECTOR DESIGNATION
- U = UPPER
  L = LOWER
- SLOT NUMBER IN INPUT FILE
- INPUT FILE (I OR J)
- PHASE

NEW	EXISTING	
		TYPE A LOOP DETECTOR. OUTLINE OF SAW CUT SHOWN
		TYPE B LOOP DETECTOR. OUTLINE OF SAW CUT SHOWN
		TYPE C LOOP DETECTOR. OUTLINE OF SAW CUT SHOWN
		TYPE D LOOP DETECTOR. OUTLINE OF SAW CUT SHOWN
		TYPE E LOOP DETECTOR. OUTLINE OF SAW CUT SHOWN
		TYPE Q LOOP DETECTOR. OUTLINE OF SAW CUT SHOWN
DH	dh	DETECTOR HANDHOLE
		MICROWAVE OR VIDEO DETECTION ZONE

STATE OF CALIFORNIA
DEPARTMENT OF TRANSPORTATION

ELECTRICAL SYSTEMS (LEGEND AND ABBREVIATIONS)

NO SCALE

RSP ES-1C DATED APRIL 15, 2016 SUPERSEDES RSP ES-1C DATED OCTOBER 30, 2015 AND RSP ES-1C DATED JULY 19, 2013 AND STANDARD PLAN ES-1C DATED MAY 20, 2011 - PAGE 427 OF THE STANDARD PLANS BOOK DATED 2010.

REVISED STANDARD PLAN RSP ES-1C

2010 REVISED STANDARD PLAN RSP ES-1C

1-22-16

Dist	COUNTY	ROUTE	POST MILES TOTAL PROJECT	SHEET No.	TOTAL SHEETS
04	CC/Mrn	580	5.0/7.8, 0.0/3.3	464	579

Theresa Gabriel
REGISTERED ELECTRICAL ENGINEER

October 30, 2015
PLANS APPROVAL DATE

REGISTERED PROFESSIONAL ENGINEER Theresa Aziz Gabriel No. E15129 Exp. 6-30-16 ELECTRICAL STATE OF CALIFORNIA

THE STATE OF CALIFORNIA OR ITS OFFICERS OR AGENTS SHALL NOT BE RESPONSIBLE FOR THE ACCURACY OR COMPLETENESS OF SCANNED COPIES OF THIS PLAN SHEET.

TO ACCOMPANY PLANS DATED _____

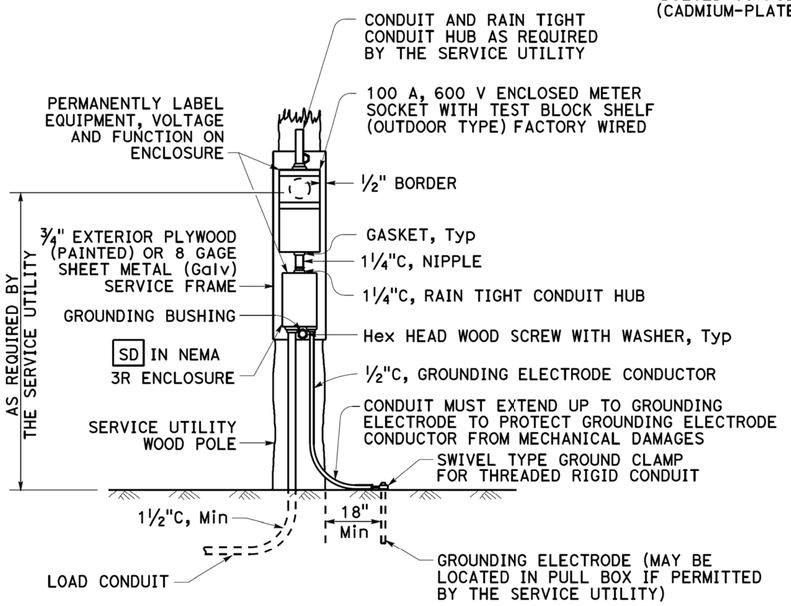

TYPE SCE-1
DETAIL A

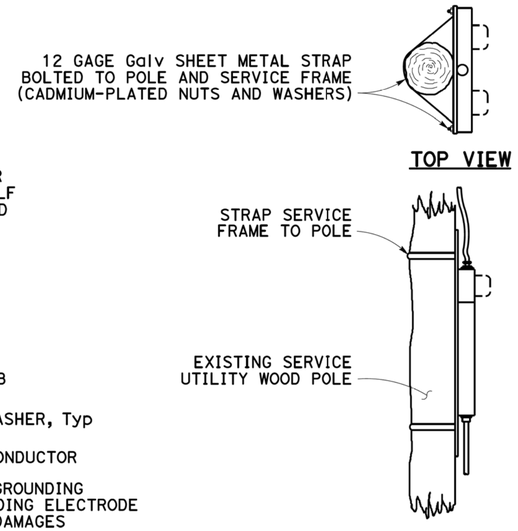

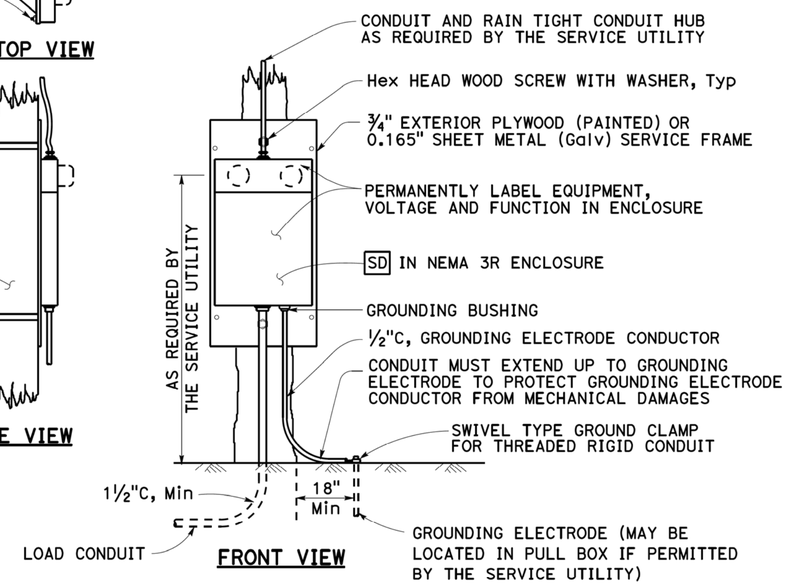

TYPE SCE-2
DETAIL B

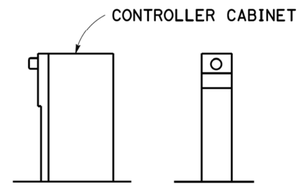

TYPE OF SERVICE (TYPICAL)
DETAIL C
See Notes 1 and 2

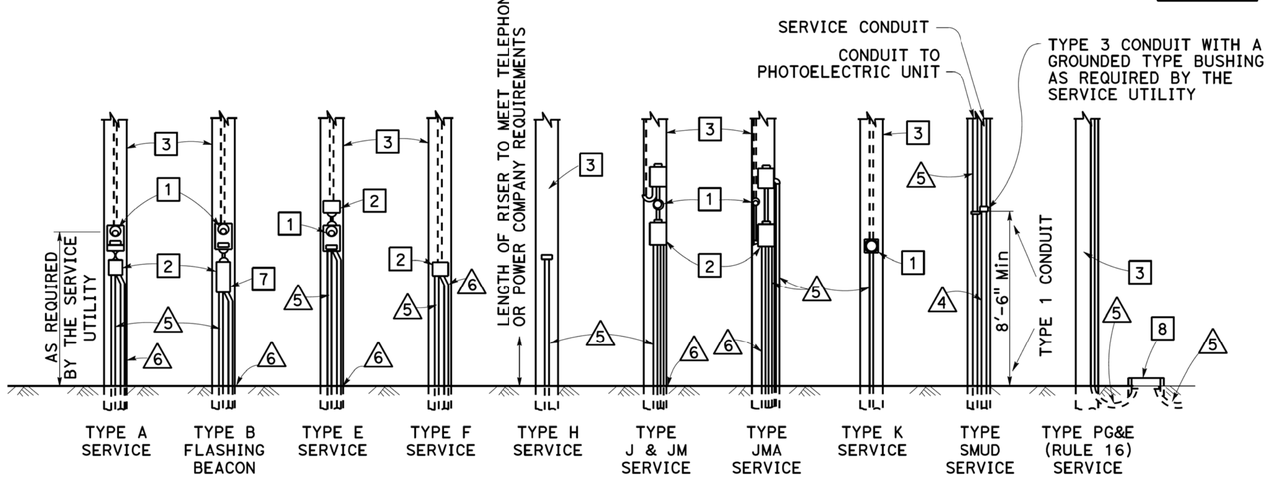

POLE MOUNTED SERVICE INSTALLATIONS
DETAIL D

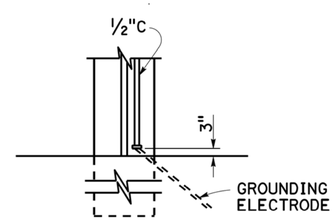

TYPE A
See Note 3

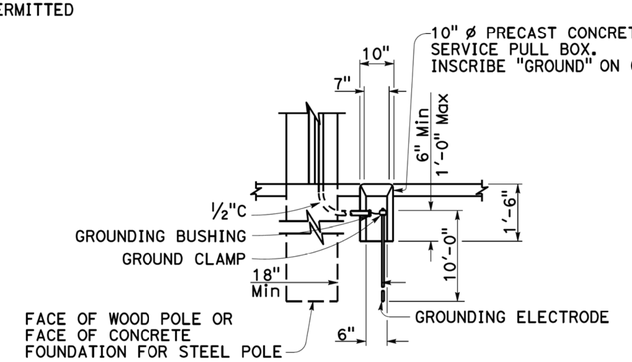

TYPE B
See Note 4

SERVICE GROUNDING
DETAIL E

LEGEND:

1. METER SOCKET.
2. SERVICE ENCLOSURE WITH A MINIMUM 60 A RATED MAIN CIRCUIT BREAKER, UNLESS OTHERWISE SHOWN.
3. A. UTILITY OWNED POLE. THE SERVICE UTILITY WILL FURNISH AND INSTALL REQUIRED SERVICE RISER, PEU WITH CONDUCTORS AND OTHER EQUIPMENT AS NEEDED.
   B. STATE OWNED POLE. THE CONTRACTOR SHALL FURNISH AND INSTALL REQUIRED SERVICE RISER AND EQUIPMENT.
4. 2"C, SERVICE CONDUIT MUST HAVE A GROUNDED TYPE BUSHING INSTALLED AT UPPER END OF THE METALLIC POLE RISER CONDUIT. A GROUNDING CONDUCTOR MUST BE ATTACHED TO THE BUSHING, CARRIED THROUGH THE CONDUIT RUN AND ATTACHED TO THE SERVICE EQUIPMENT ENCLOSURE'S GROUNDING ELECTRODE.
5. CONDUIT, LENGTH AND SIZE AS REQUIRED.
6. ½"C, 1#6. SEE DETAIL E.
7. FLASHING BEACON CONTROL ASSEMBLY.
8. SERVICE PULL BOX, No. 5 UNLESS OTHERWISE NOTED, FURNISHED AND INSTALLED BY THE CONTRACTOR. SERVICE UTILITY SHALL DETERMINE THE EXACT LOCATION.

NOTES:

1. Type II service equipment enclosure mounted on the side of a controller cabinet.
2. Type III complete free-standing service equipment enclosure.
3. Ground clamp and required fittings must be accessible. Conduit must extend to protect grounding electrode conductor from mechanical damage.
4. Use where service utility requires 18" clearance between grounding electrode and the pole or service equipment enclosure. Installation shown is for sidewalk or paved areas. In unpaved areas, omit special service pull box and locate ground clamp above ground or locate ground clamp in nearest pull box.

STATE OF CALIFORNIA
DEPARTMENT OF TRANSPORTATION

ELECTRICAL SYSTEMS (SERVICE EQUIPMENT)

NO SCALE

RSP ES-2A DATED OCTOBER 30, 2015 SUPERSEDES STANDARD PLAN ES-2A DATED MAY 20, 2011 - PAGE 428 OF THE STANDARD PLANS BOOK DATED 2010.

REVISED STANDARD PLAN RSP ES-2A

2010 REVISED STANDARD PLAN RSP ES-2A

8-20-15

Dist	COUNTY	ROUTE	POST MILES TOTAL PROJECT	SHEET No.	TOTAL SHEETS
04	CC/Mrn	580	5.0/7.8, 0.0/3.3	465	579

Theresa Gabriel
REGISTERED ELECTRICAL ENGINEER

October 30, 2015
PLANS APPROVAL DATE

REGISTERED PROFESSIONAL ENGINEER
Theresa Aziz Gabriel
No. E15129
Exp. 6-30-16
ELECTRICAL
STATE OF CALIFORNIA

THE STATE OF CALIFORNIA OR ITS OFFICERS OR AGENTS SHALL NOT BE RESPONSIBLE FOR THE ACCURACY OR COMPLETENESS OF SCANNED COPIES OF THIS PLAN SHEET.

TO ACCOMPANY PLANS DATED _____

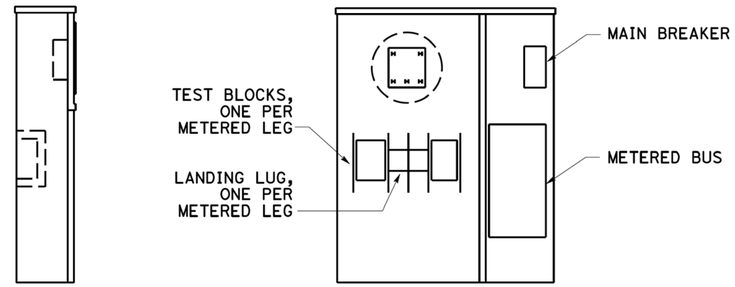

SIDE VIEW ELEVATION

TYPE II-A

NOTES:

1. In unpaved areas, a raised portland cement concrete pad of 2'-0" x 4" x width of service equipment enclosure or controller cabinet foundation shall be constructed in front of Type II service equipment enclosure.
2. Circuit breakers may be mounted in the vertical or horizontal position.

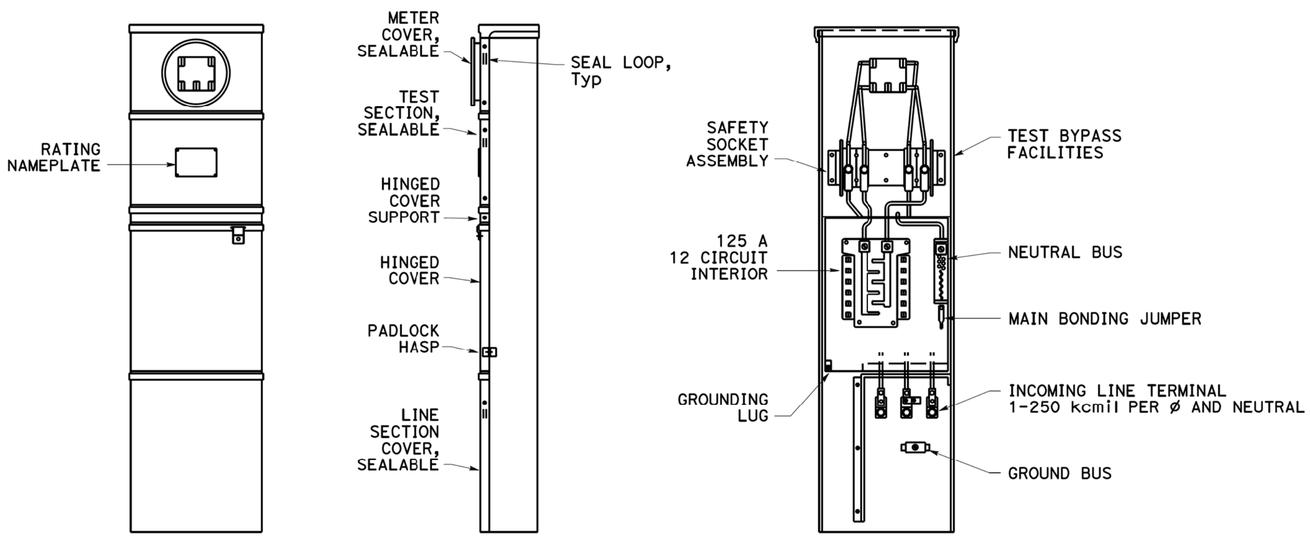

FRONT VIEW SIDE VIEW FRONT VIEW

(Less covers and dead front panel)
For metered circuits only

TYPE II-B

STATE OF CALIFORNIA
DEPARTMENT OF TRANSPORTATION

ELECTRICAL SYSTEMS (SERVICE EQUIPMENT ENCLOSURE TYPE II SERIES)

NO SCALE

RSP ES-2B DATED OCTOBER 30, 2015 SUPERSEDES STANDARD PLAN ES-2B DATED MAY 20, 2011 - PAGE 429 OF THE STANDARD PLANS BOOK DATED 2010.

REVISED STANDARD PLAN RSP ES-2B

2010 REVISED STANDARD PLAN RSP ES-2B

8-20-15

Dist	COUNTY	ROUTE	POST MILES TOTAL PROJECT	SHEET No.	TOTAL SHEETS
04	CC/Mrn	580	5.0/7.8, 0.0/3.3	466	579

Theresa Gabriel
REGISTERED ELECTRICAL ENGINEER

October 30, 2015
PLANS APPROVAL DATE

REGISTERED PROFESSIONAL ENGINEER
Theresa Aziz Gabriel
No. E15129
Exp. 6-30-16
ELECTRICAL
STATE OF CALIFORNIA

THE STATE OF CALIFORNIA OR ITS OFFICERS OR AGENTS SHALL NOT BE RESPONSIBLE FOR THE ACCURACY OR COMPLETENESS OF SCANNED COPIES OF THIS PLAN SHEET.

TO ACCOMPANY PLANS DATED _____

2010 REVISED STANDARD PLAN RSP ES-2C

NOTES:

1. The plan shows the approximate location of devices within the enclosure. Components may be rearranged, however, the "working" clearances within the service equipment enclosure shall be maintained.

2. In unpaved areas a raised portland cement concrete pad 2'-0" x 4" x width of foundation shall be constructed in front of new service equipment enclosure installation. Pad shall be set to elevation of foundation.

3. Plug-in circuit breakers may be mounted in the vertical or horizontal position. Cable-in/cable-out circuit breakers shall be mounted in the vertical position.

4. Type III-AF and Type III-BF service equipment enclosures shall have the meter viewing windows located on the front side of the service equipment enclosures.

5. Type III-AR and Type III-BR service equipment enclosure shall be similarly constructed as Type III-AF and Type III-BF respectively, except the meter viewing windows shall be located on the back side of the service equipment enclosures.

STATE OF CALIFORNIA
DEPARTMENT OF TRANSPORTATION

ELECTRICAL SYSTEMS (SERVICE EQUIPMENT ENCLOSURE NOTES TYPE III SERIES)

NO SCALE

RSP ES-2C DATED OCTOBER 30, 2015 SUPERSEDES STANDARD PLAN ES-2C DATED MAY 20, 2011 - PAGE 430 OF THE STANDARD PLANS BOOK DATED 2010.

REVISED STANDARD PLAN RSP ES-2C

8-19-15

Dist	COUNTY	ROUTE	POST MILES TOTAL PROJECT	SHEET No.	TOTAL SHEETS
04	CC/Mrn	580	5.0/7.8, 0.0/3.3	467	579

Theresa Gabriel
REGISTERED ELECTRICAL ENGINEER

October 30, 2015
PLANS APPROVAL DATE

REGISTERED PROFESSIONAL ENGINEER Theresa Aziz Gabriel No. E15129 Exp. 6-30-16 ELECTRICAL STATE OF CALIFORNIA

THE STATE OF CALIFORNIA OR ITS OFFICERS OR AGENTS SHALL NOT BE RESPONSIBLE FOR THE ACCURACY OR COMPLETENESS OF SCANNED COPIES OF THIS PLAN SHEET.

TO ACCOMPANY PLANS DATED _____

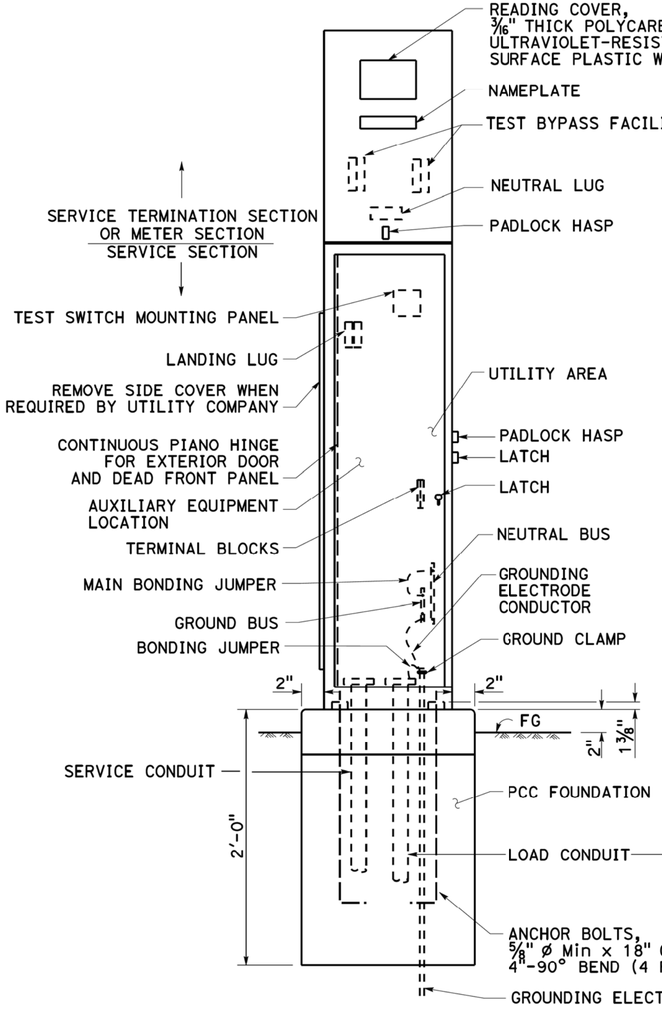

FRONT VIEW

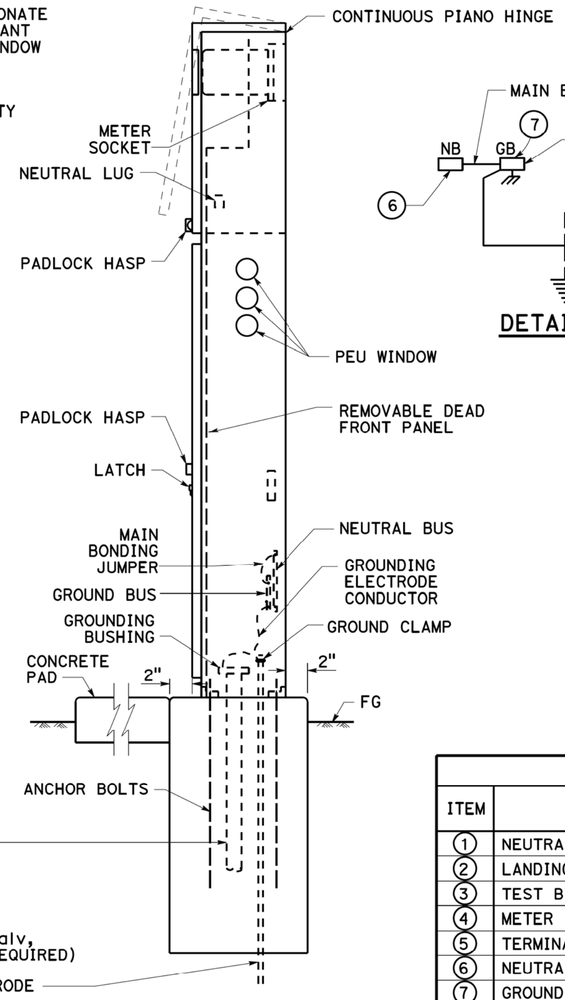

SIDE VIEW

TYPE III-AF SERVICE EQUIPMENT ENCLOSURE (TYPICAL)
DETAIL A

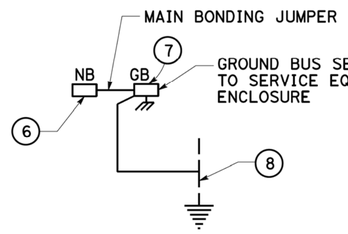

DETAIL D

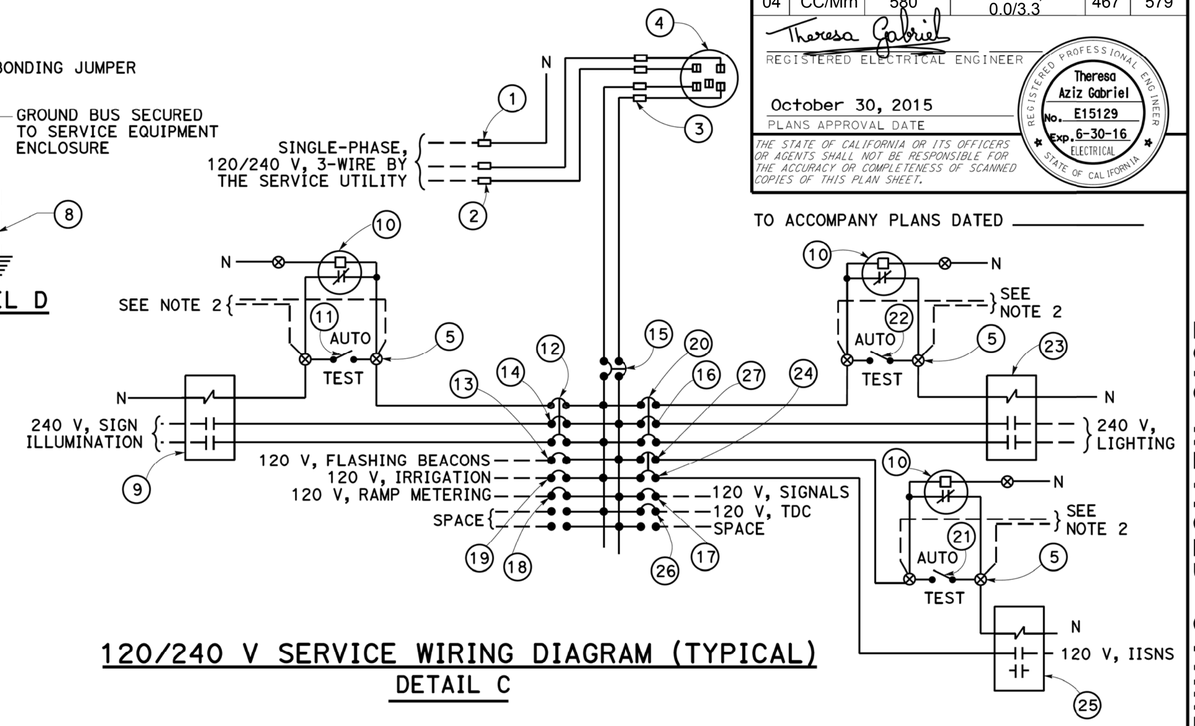

120/240 V SERVICE WIRING DIAGRAM (TYPICAL)
DETAIL C

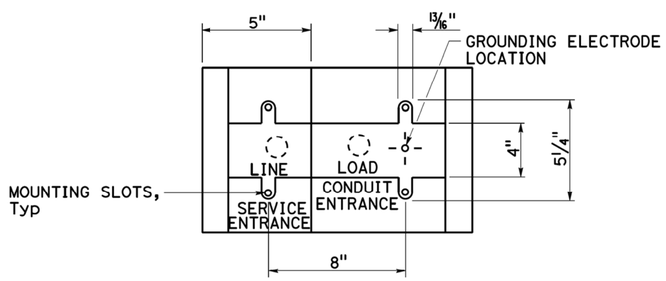

BASE FOR TYPE III-A SERVICE EQUIPMENT ENCLOSURE
DETAIL B

TYPE III-A SERVICE EQUIPMENT ENCLOSURE LEGEND (120/240 V)

ITEM	COMPONENT	NAMEPLATE DESCRIPTION	ITEM	COMPONENT	NAMEPLATE DESCRIPTION
1	NEUTRAL LUG		14	30 A, 240 V, 2P, CB	SIGN ILLUMINATION
2	LANDING LUG		15	100 A, 240 V, 2P, CB	MAIN BREAKER
3	TEST BYPASS FACILITY		16	30 A, 240 V, 2P, CB	LIGHTING
4	METER SOCKET AND SUPPORT		17	50 A, 120 V, 1P, CB	SIGNALS
5	TERMINAL BLOCKS		18	30 A, 120 V, 1P, CB	RAMP METERING
6	NEUTRAL BUS		19	20 A, 120 V, 1P, CB	IRRIGATION
7	GROUND BUS		20	15 A, 120 V, 1P, CB	LIGHTING CONTROL
8	GROUNDING ELECTRODE		21	15 A, 1P, TEST SWITCH	IISNS TEST SWITCH
9	30 A, 2P, NO CONTACTOR	SIGN ILLUMINATION	22	15 A, 1P, TEST SWITCH	LIGHTING TEST SWITCH
10	PHOTOELECTRIC UNIT (NOTE 4)	PEU	23	60 A, 2P, NO CONTACTOR	LIGHTING
11	15 A, 1P, TEST SWITCH	SIGN ILLUMINATION TEST SWITCH	24	15 A, 120 V, 1P, CB	IISNS
12	15 A, 120 V, 1P, CB	SIGN ILLUMINATION CONTROL	25	30 A, 2P, NO CONTACTOR	IISNS
13	15 A, 120 V, 1P, CB	FLASHING BEACON	26	20 A, 120 V, 1P, CB	TELEPHONE DEMARCATION CABINET
			27	15 A, 120 V, 1P, CB	IISNS CONTROL

NOTES:

1. Unless otherwise indicated on the plans, service equipment items shall be provided for each service equipment enclosure as shown.
2. Connect to remote test switch mounted on lighting standards, sign post or structure when required.
3. Items 1 and 6 shall be isolated from the service equipment enclosure.
4. Type V photoelectric control shall be used unless otherwise indicated on the plans.
5. Item 12, 20 and 27 shall be ganged operated CB.

STATE OF CALIFORNIA
DEPARTMENT OF TRANSPORTATION

ELECTRICAL SYSTEMS (SERVICE EQUIPMENT ENCLOSURE AND TYPICAL WIRING DIAGRAM, TYPE III-A SERIES)

NO SCALE

RSP ES-2D DATED OCTOBER 30, 2015 SUPERSEDES STANDARD PLAN ES-2D DATED MAY 20, 2011 - PAGE 431 OF THE STANDARD PLANS BOOK DATED 2010.

REVISED STANDARD PLAN RSP ES-2D

2010 REVISED STANDARD PLAN RSP ES-2D

8-20-15

Dist	COUNTY	ROUTE	POST MILES TOTAL PROJECT	SHEET No.	TOTAL SHEETS
04	CC/Mrn	580	5.0/7.8, 0.0/3.3	468	579

Theresa Gabriel
REGISTERED ELECTRICAL ENGINEER

October 30, 2015
PLANS APPROVAL DATE

Theresa Aziz Gabriel No. E15129 Exp. 6-30-16 ELECTRICAL — REGISTERED PROFESSIONAL ENGINEER — STATE OF CALIFORNIA

THE STATE OF CALIFORNIA OR ITS OFFICERS OR AGENTS SHALL NOT BE RESPONSIBLE FOR THE ACCURACY OR COMPLETENESS OF SCANNED COPIES OF THIS PLAN SHEET.

TO ACCOMPANY PLANS DATED _____

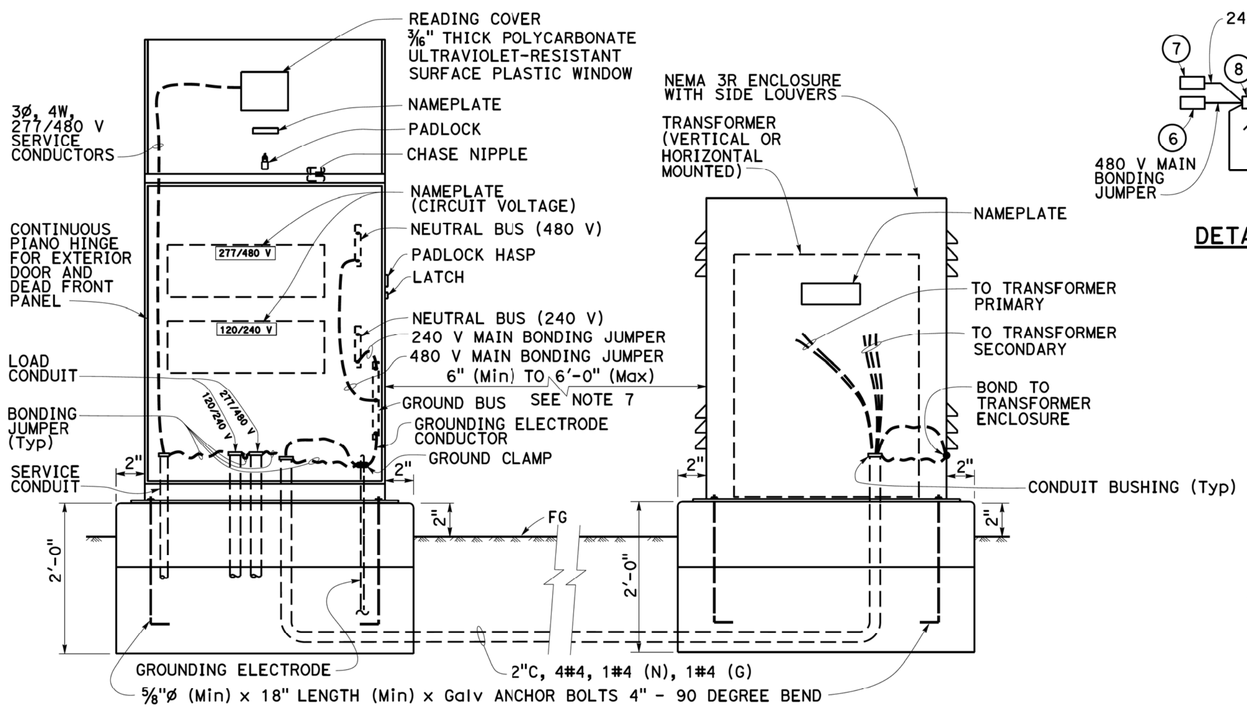

SIDE INSTALLATION OF TRANSFORMER

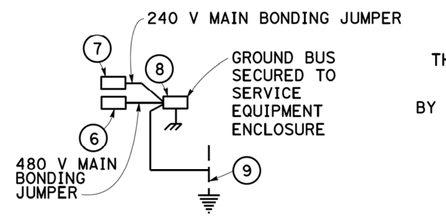

DETAIL B

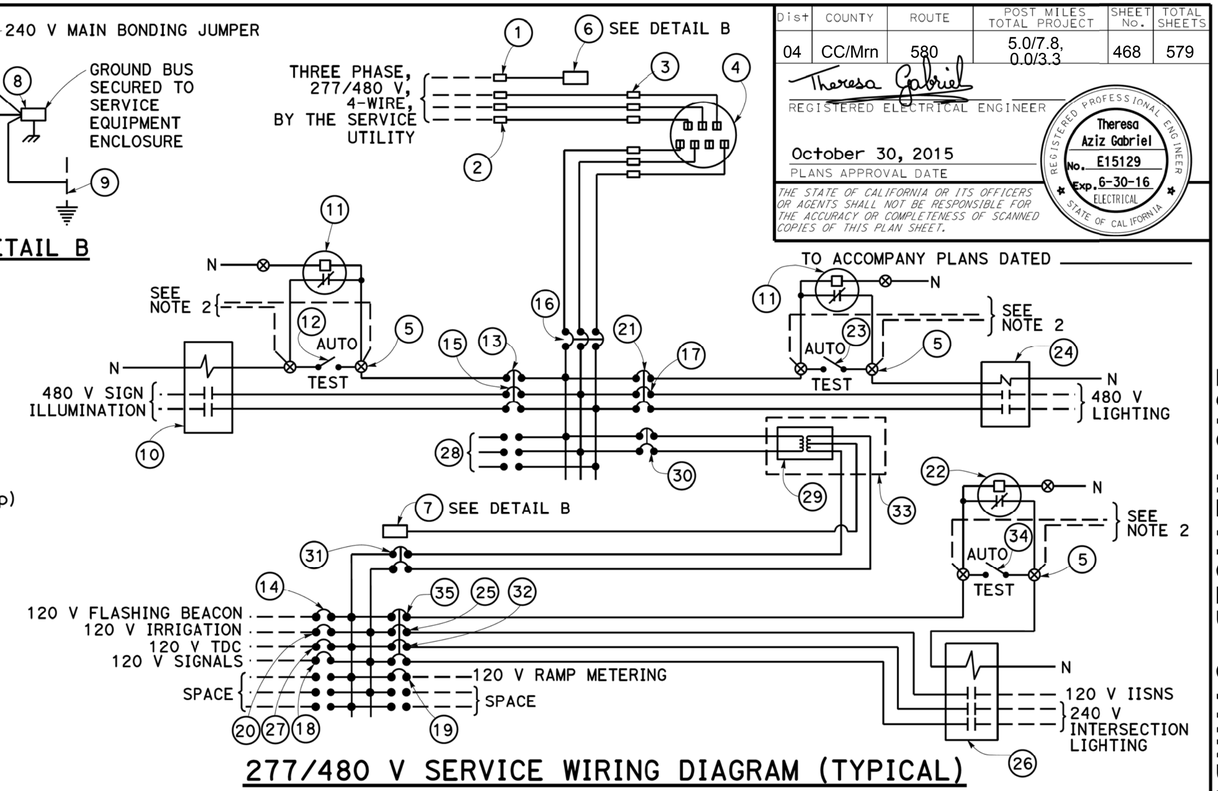

277/480 V SERVICE WIRING DIAGRAM (TYPICAL)

DETAIL C

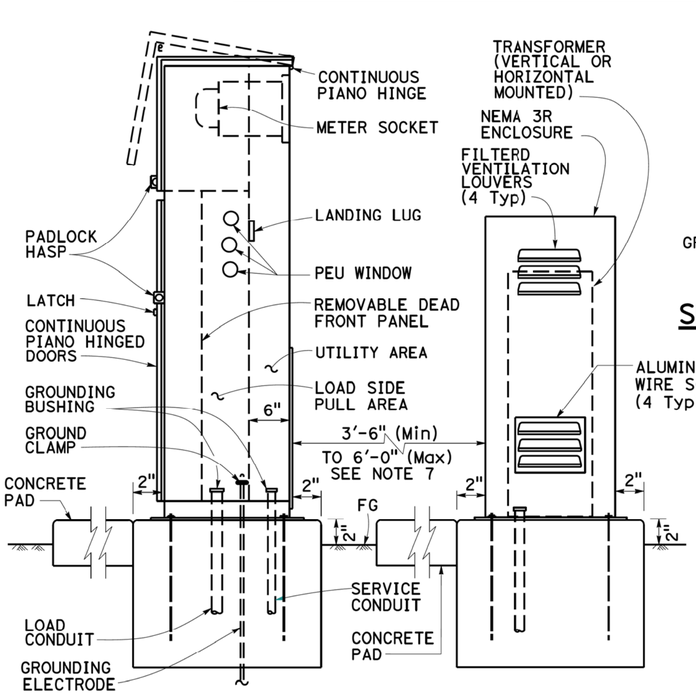

REAR INSTALLATION OF TRANSFORMER

TYPE III-DF SERVICE EQUIPMENT ENCLOSURE TYPICAL

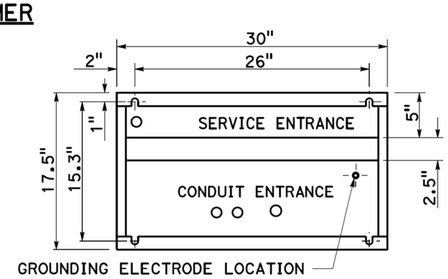

BASE FOR TYPE III-D SERVICE EQUIPMENT ENCLOSURE

DETAIL A

TYPE III-D SERVICE (277/480 V) EQUIPMENT LEGEND

ITEM No.	COMPONENT	NAMEPLATE DESCRIPTION	ITEM No.	COMPONENT	NAMEPLATE DESCRIPTION
1	NEUTRAL LUG		19	30 A, 120 V, 1P, CB	RAMP METERING (120 V)
2	LANDING LUG		20	20 A, 120 V, 1P, CB	IRRIGATION (120 V)
3	TEST BYPASS FACILITY		21	10 A, 277 V, 1P, CB	LIGHTING CONTROL (277 V)
4	METER SOCKET AND SUPPORT		22	PHOTOELECTRIC UNIT (NOTE 4)	PEU (120/240 V)
5	TERMINAL BLOCKS		23	15 A, 1P, TEST SWITCH	LIGHTING TEST SWITCH (277 V)
6	NEUTRAL BUS	NEUTRAL BUS (480 V)	24	30 A, 2P, NO CONTACTOR	LIGHTING (480 V)
7	NEUTRAL BUS	NEUTRAL BUS (240 V)	25	15 A, 120 V, 1P, CB	IISNS (120 V)
8	GROUND BUS		26	30 A, 3P, NO CONTACTOR	INTERSECTION LIGHTING (120 V)
9	GROUNDING ELECTRODE		27	20 A, 120 V, 1P, CB	TELEPHONE DEMARCATION CABINET (120 V)
10	30 A, 2P, NO CONTACTOR	SIGN ILLUMINATION (480 V)	28	20 A, 480 V, 3P, CB	SPACE
11	PHOTOELECTRIC UNIT (NOTE 4)	PEU (277/480 V PEU)	29	15 kVA, 480-120/240 V TRANSFORMER	TRANSFORMER, 15 kVA, 480-240 V
12	15 A, 1P, TEST SWITCH	SIGN ILLUMINATION TEST SWITCH (277 V)	30	40 A, 480 V, 2P, CB	TRANSFORMER PRIMARY (480 V)
13	10 A, 277 V, 1P, CB	SIGN ILLUMINATION CONTROL (277 V)	31	80 A, 240 V, 2P, CB	TRANSFORMER SECONDARY (240 V)
14	15 A, 120 V, 1P, CB	FLASHING BEACON (120 V)	32	30 A, 240 V, 2P, CB	INTERSECTION LIGHTING (240 V)
15	15 A, 480 V, 2P, CB	SIGN ILLUMINATION (480 V)	33	NEMA 3R ENCLOSURE WITH LOUVERS	TRANSFORMER, 15 kVA, 480-240 V
16	100 A, 480 V, 3P, CB	MAIN BREAKER (480 V)	34	15 A, 1P, TEST SWITCH	IISNS AND INTERSECTION LIGHTING TEST SWITCH (120 V)
17	15 A, 480 V, 2P, CB	LIGHTING (480 V)	35	10 A, 120 V, 1P, CB	IISNS AND INTERSECTION LIGHTING CONTROL (120 V)
18	50 A, 120 V, 1P, CB	SIGNAL (120 V)			

NOTES:

1. Unless otherwise indicated on the plans, service equipment items shall be provided for each service equipment enclosure as shown.
2. Connect to remote test switch mounted on lighting standards, sign post or structure when required.
3. Items No. 1, 6 and 7 shall be isolated from the service equipment enclosure.
4. Type V photoelectric control shall be used unless otherwise indicated on the plans.
5. Color of insulation of the neutral shall be gray for the 277/480 V system and shall be white for the ½V system.
6. Items 13, 21 and 35 shall be ganged operated CB.
7. The NEMA 3R enclosure shall be located to the side of the service equipment enclosure unless otherwise indicated on the plans.
8. The base dimension for the NEMA 3R enclosure for the transformer shall be as per manufacturer's design.

NO SCALE

STATE OF CALIFORNIA
DEPARTMENT OF TRANSPORTATION

ELECTRICAL SYSTEMS (SERVICE EQUIPMENT ENCLOSURE AND TYPICAL WIRING DIAGRAM, TYPE III-D SERIES)

RSP ES-2G DATED OCTOBER 30, 2015 SUPERSEDES STANDARD PLAN ES-2G DATED MAY 20, 2011 - PAGE 434 OF THE STANDARD PLANS BOOK DATED 2010.

REVISED STANDARD PLAN RSP ES-2G

2010 REVISED STANDARD PLAN RSP ES-2G

8-19-15

Dist	COUNTY	ROUTE	POST MILES TOTAL PROJECT	SHEET No.	TOTAL SHEETS
04	CC/Mrn	580	5.0/7.8, 0.0/3.3	469	579

Theresa Gabriel
REGISTERED ELECTRICAL ENGINEER

April 15, 2016
PLANS APPROVAL DATE

REGISTERED PROFESSIONAL ENGINEER Theresa Aziz Gabriel No. E15129 Exp. 6-30-16 ELECTRICAL STATE OF CALIFORNIA

THE STATE OF CALIFORNIA OR ITS OFFICERS OR AGENTS SHALL NOT BE RESPONSIBLE FOR THE ACCURACY OR COMPLETENESS OF SCANNED COPIES OF THIS PLAN SHEET.

TO ACCOMPANY PLANS DATED _____

2010 REVISED STANDARD PLAN RSP ES-3C

NOTES:

1. Controller units, plug-mounted equipment, shelf-mounted equipment and wall-mounted equipment shall be located to permit safe and easy removal or replacement without removing any other piece of equipment.
2. Cabinet fan may be installed at an alternate location near the top of the cabinet when approved by the Engineer.
3. Where telephone interconnect is required, a minimum of 5" clear vertical space shall be provided inside the cabinet for the equipment.
4. Telephone interconnect conductors shall be enclosed in a ¾"C or larger conduit through the foundation. Type 4 conduit shall be used to separate telephone and power conductors in cabinets.

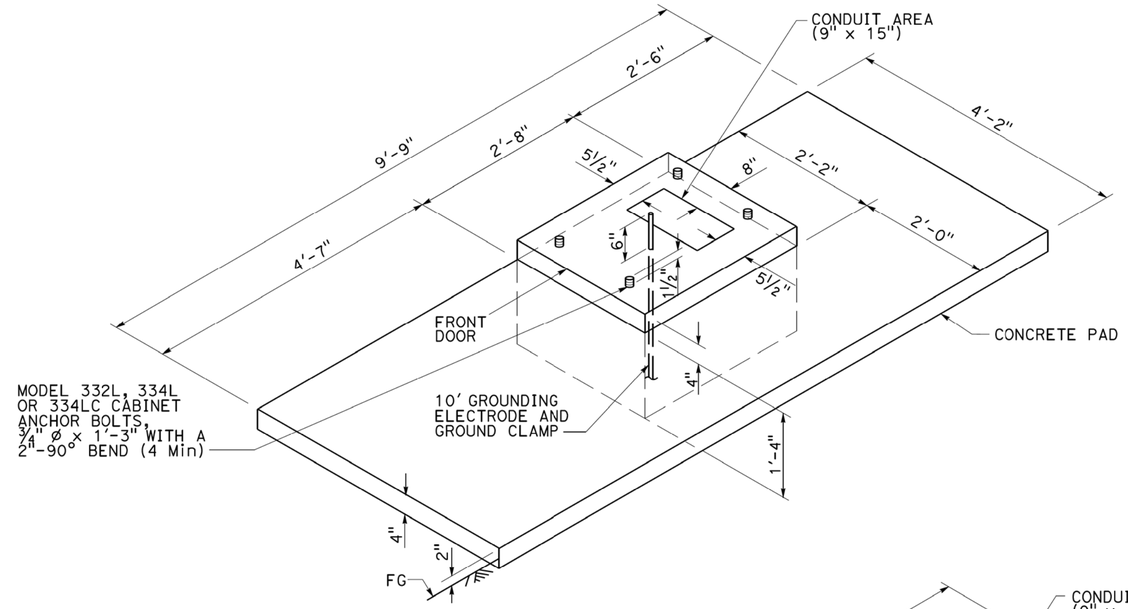

FOUNDATION AND PAD DETAIL

Model 332L, 334L and 334LC

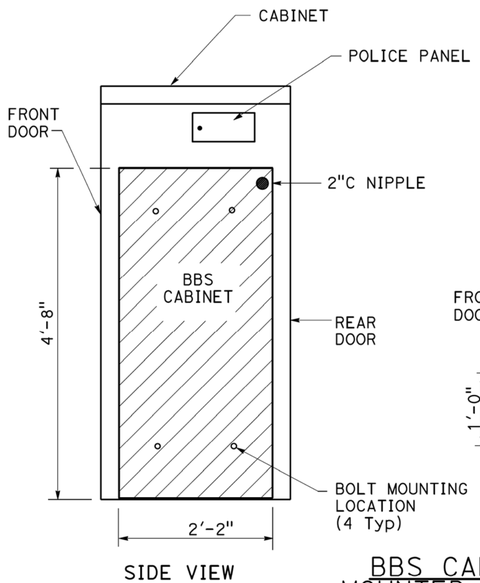

SIDE VIEW

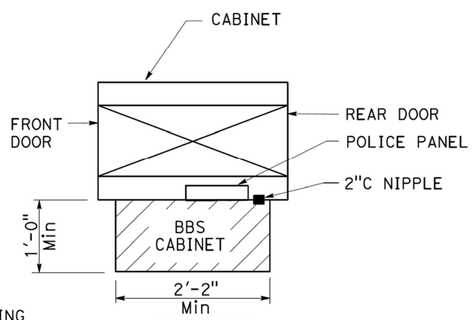

TOP VIEW

BBS CABINET MOUNTED TO THE MODEL 332L CABINET

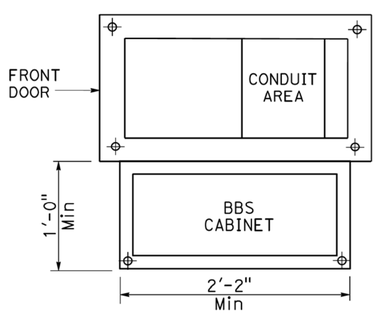

BASE PLAN FOR BBS MOUNTED TO THE MODEL 332L CABINET

(FOR DIMENSIONS AND DETAILS NOT SHOWN, SEE CABINET HOUSING DETAILS OF THE TRANSPORTATION ELECTRICAL EQUIPMENT SPECIFICATION (TEES))

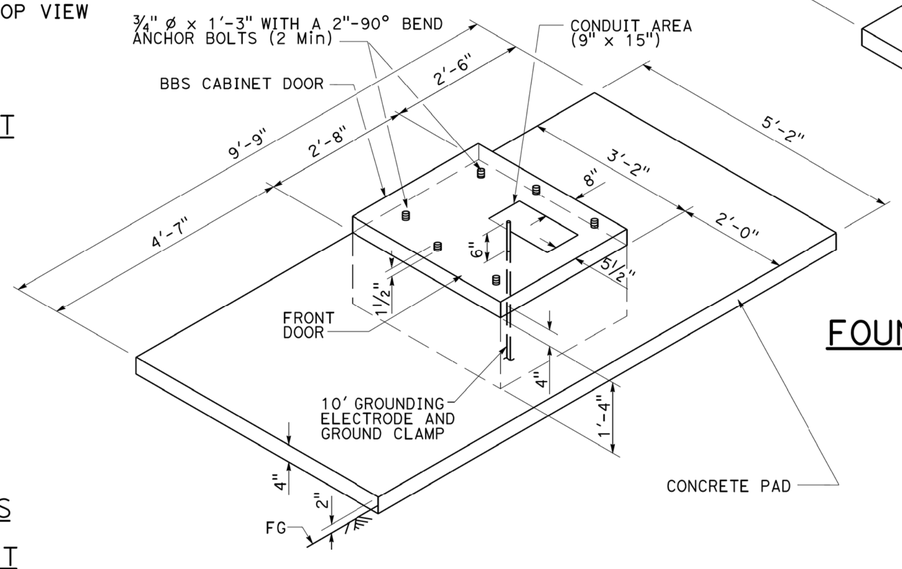

LEFT SIDE INSTALLATION

DETAIL A

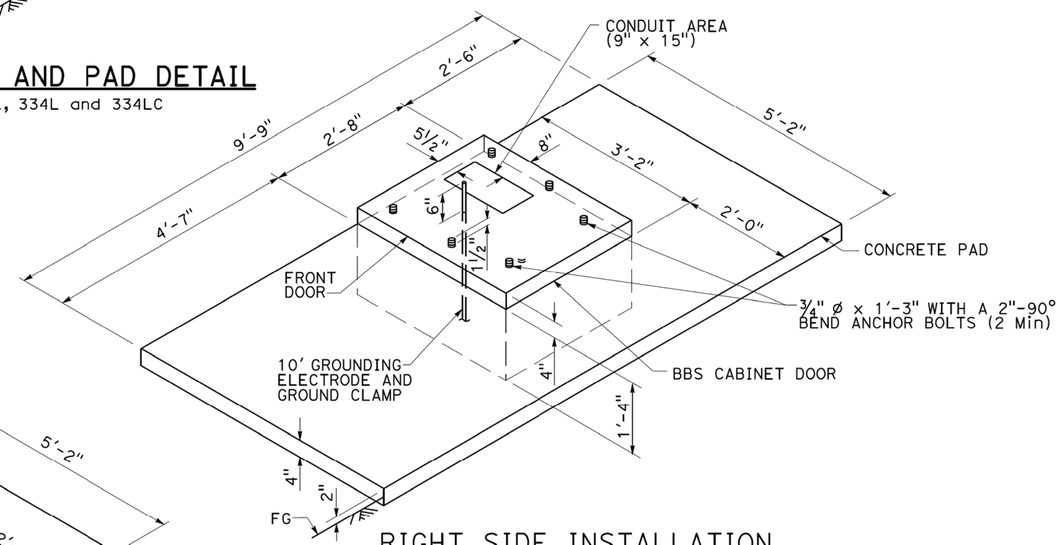

RIGHT SIDE INSTALLATION

DETAIL B

MODIFIED MODEL 332L CABINET FOUNDATION DETAIL FOR BATTERY BACKUP SYSTEM

STATE OF CALIFORNIA
DEPARTMENT OF TRANSPORTATION

ELECTRICAL SYSTEMS (CONTROLLER CABINET FOUNDATION AND PAD DETAILS)

NO SCALE

RSP ES-3C DATED APRIL 15, 2016 SUPERSEDES RSP ES-3C DATED OCTOBER 30, 2015 AND STANDARD PLAN ES-3C DATED MAY 20, 2011 - PAGE 437 OF THE STANDARD PLANS BOOK DATED 2010.

REVISED STANDARD PLAN RSP ES-3C

1-12-16

Dist	COUNTY	ROUTE	POST MILES TOTAL PROJECT	SHEET No.	TOTAL SHEETS
04	CC/Mrn	580	5.0/7.8, 0.0/3.3	470	579

Theresa Gabriel
REGISTERED ELECTRICAL ENGINEER

April 15, 2016
PLANS APPROVAL DATE

REGISTERED PROFESSIONAL ENGINEER
Theresa Aziz Gabriel
No. E15129
Exp. 6-30-16
ELECTRICAL
STATE OF CALIFORNIA

THE STATE OF CALIFORNIA OR ITS OFFICERS OR AGENTS SHALL NOT BE RESPONSIBLE FOR THE ACCURACY OR COMPLETENESS OF SCANNED COPIES OF THIS PLAN SHEET.

TO ACCOMPANY PLANS DATED _____

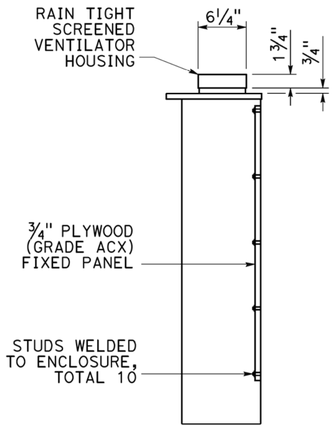

SECTION A-A

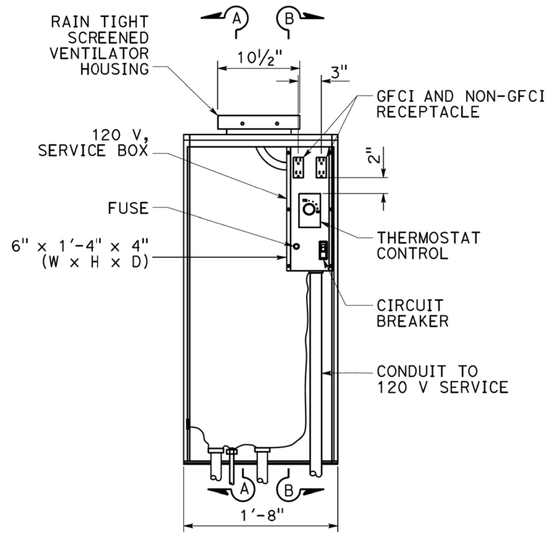

FRONT VIEW

INTERIOR DETAIL A

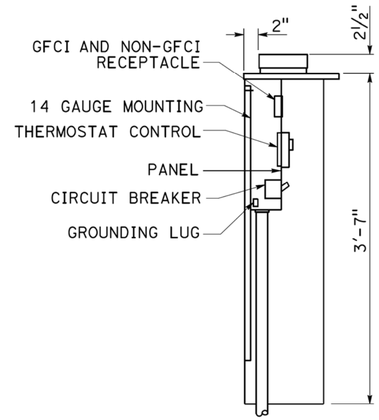

SECTION B-B

NOTE:

1. Dimensions are nominal.

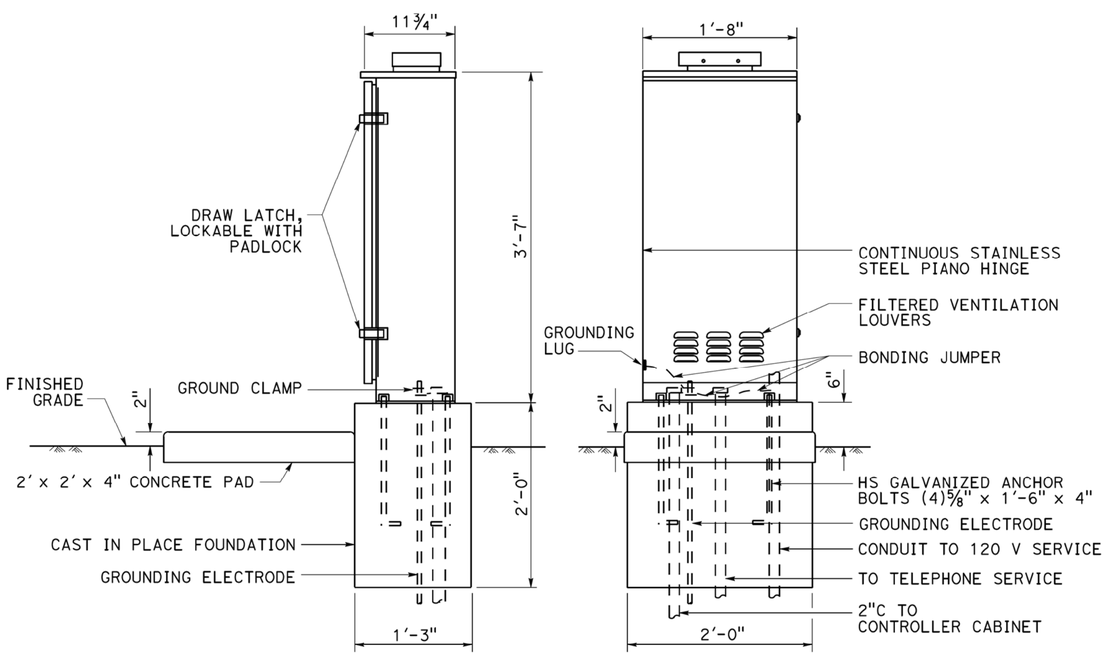

SIDE VIEW FRONT VIEW

EXTERIOR DETAIL B

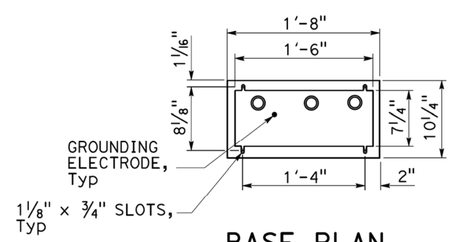

BASE PLAN

DETAIL C

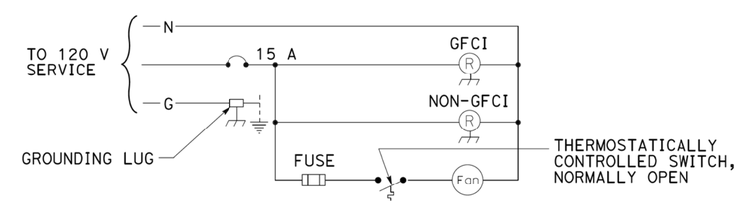

WIRING DIAGRAM

DETAIL D

STATE OF CALIFORNIA
DEPARTMENT OF TRANSPORTATION

ELECTRICAL SYSTEMS (TELEPHONE DEMARCATION CABINET, TYPE B)

NO SCALE

RSP ES-3E DATED APRIL 15, 2016 SUPERSEDES RSP ES-3E DATED OCTOBER 30, 2015 AND STANDARD PLAN ES-3E DATED MAY 20, 2011 - PAGE 439 OF THE STANDARD PLANS BOOK DATED 2010.

REVISED STANDARD PLAN RSP ES-3E

2010 REVISED STANDARD PLAN RSP ES-3E

1-12-16

Dist	COUNTY	ROUTE	POST MILES TOTAL PROJECT	SHEET No.	TOTAL SHEETS
04	CC/Mrn	580	5.0/7.8, 0.0/3.3	471	579

Theresa Gabriel
REGISTERED ELECTRICAL ENGINEER

October 30, 2015
PLANS APPROVAL DATE

REGISTERED PROFESSIONAL ENGINEER
Theresa Aziz Gabriel
No. E15129
Exp. 6-30-16
ELECTRICAL
STATE OF CALIFORNIA

THE STATE OF CALIFORNIA OR ITS OFFICERS OR AGENTS SHALL NOT BE RESPONSIBLE FOR THE ACCURACY OR COMPLETENESS OF SCANNED COPIES OF THIS PLAN SHEET.

TO ACCOMPANY PLANS DATED _____

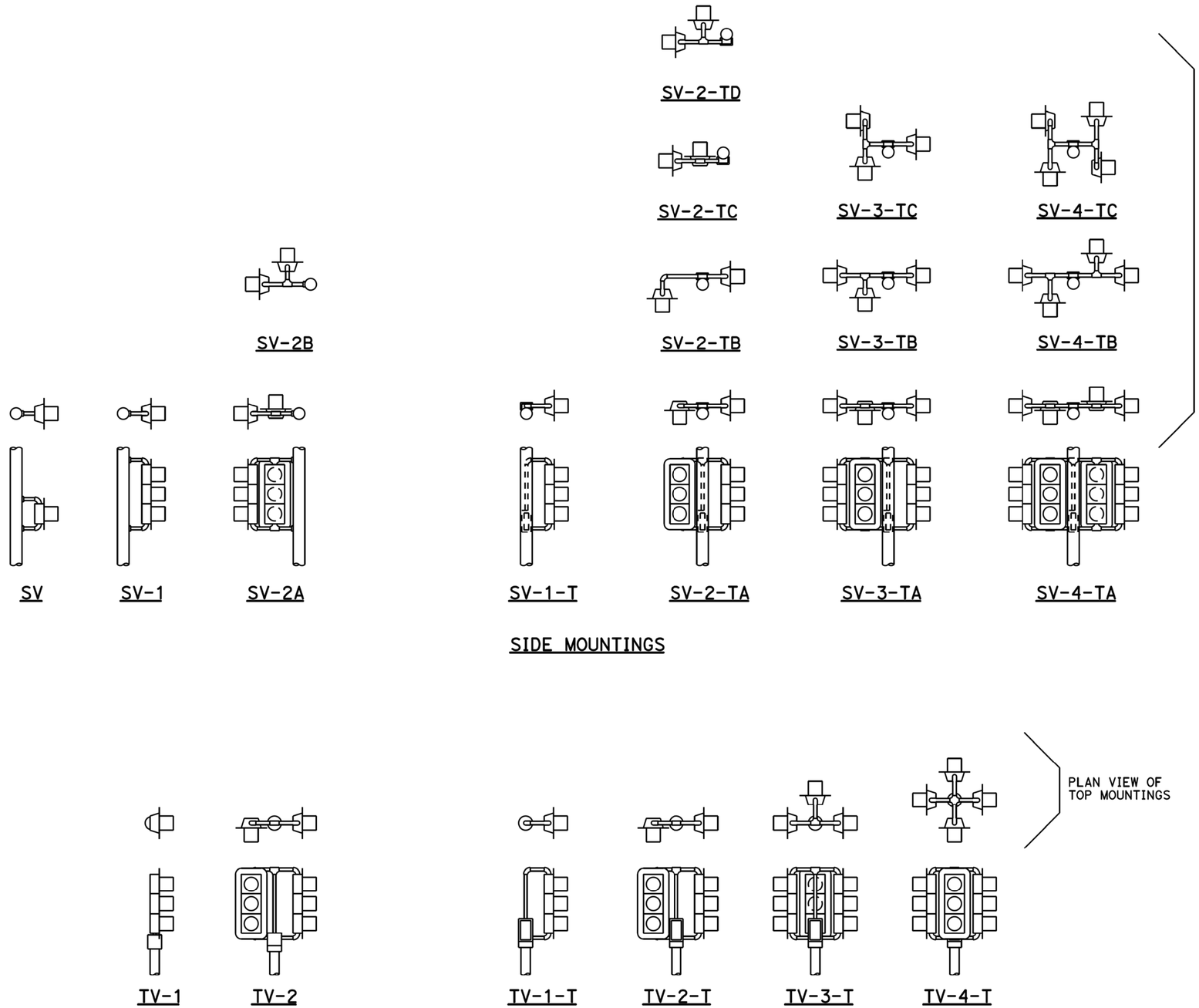

ABBREVIATIONS:

SV	SIDE MOUNTED SIGNAL HEADS
T	TERMINAL COMPARTMENT
TV	TOP MOUNTED SIGNAL HEADS
1, 2, 3, 4	NUMBER OF SIGNAL FACES (3 - SECTION, UNLESS OTHERWISE INDICATED)
A, B, C, D	CONFIGURATION OF SIGNALS

NOTES:

1. Mountings shall be oriented to provide maximum horizontal clearance to adjacent roadway.
2. Bracket arms shall be long enough to permit proper alignment of signals and backplate installation.
3. See Revised Standard Plans RSP ES-4D and RSP ES-4E for attachment fitting details.

STATE OF CALIFORNIA
DEPARTMENT OF TRANSPORTATION

ELECTRICAL SYSTEMS (SIGNAL HEADS AND MOUNTINGS)

NO SCALE

RSP ES-4A DATED OCTOBER 30, 2015 SUPERSEDES RSP ES-4A DATED JULY 19, 2013 AND STANDARD PLAN ES-4A DATED MAY 20, 2011 - PAGE 443 OF THE STANDARD PLANS BOOK DATED 2010.

REVISED STANDARD PLAN RSP ES-4A

2010 REVISED STANDARD PLAN RSP ES-4A

9-28-15

Dist	COUNTY	ROUTE	POST MILES TOTAL PROJECT	SHEET No.	TOTAL SHEETS
04	CC/Mrn	580	5.0/7.8, 0.0/3.3	472	579

Theresa Gabriel
REGISTERED ELECTRICAL ENGINEER

October 30, 2015
PLANS APPROVAL DATE

REGISTERED PROFESSIONAL ENGINEER
Theresa Aziz Gabriel
No. E15129
Exp. 6-30-16
ELECTRICAL
STATE OF CALIFORNIA

THE STATE OF CALIFORNIA OR ITS OFFICERS OR AGENTS SHALL NOT BE RESPONSIBLE FOR THE ACCURACY OR COMPLETENESS OF SCANNED COPIES OF THIS PLAN SHEET.

TO ACCOMPANY PLANS DATED _____

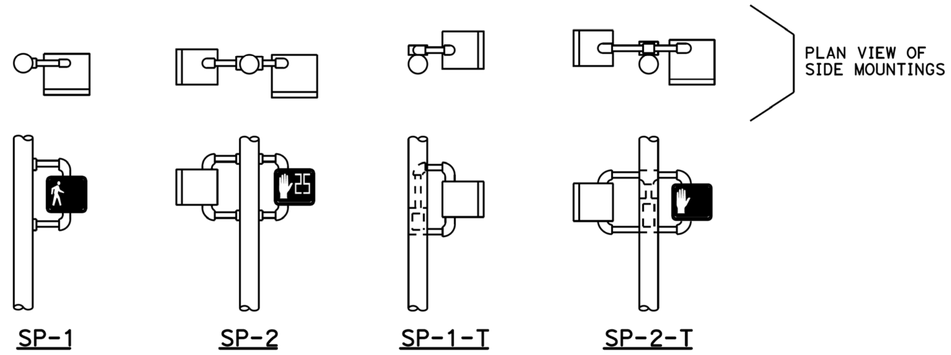

SIDE MOUNTINGS

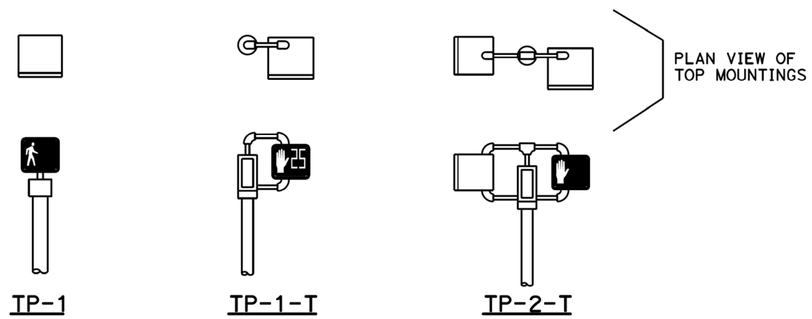

TOP MOUNTINGS

PEDESTRIAN SIGNAL HEAD MOUNTINGS
DETAIL A

PERSON WALKING INTERVAL FLASHING UPRAISED HAND INTERVAL STEADY UPRAISED HAND INTERVAL

LED COUNTDOWN PEDESTRIAN SIGNAL FACE MODULE
DETAIL B

NOTES:

1. Mounting shall be oriented to provide maximum horizontal clearance to adjacent roadway.
2. Bracket arms shall be long enough to permit proper alignment of signals.
3. See Revised Standard Plan RSP ES-4D for attachment fittings details.

ABBREVIATIONS:

1, 2	NUMBER OF SIGNAL FACES
SP	SIDE MOUNTED PEDESTRIAN SIGNAL
T	TERMINAL COMPARTMENT
TP	TOP MOUNTED PEDESTRIAN SIGNAL

STATE OF CALIFORNIA
DEPARTMENT OF TRANSPORTATION

ELECTRICAL SYSTEMS (PEDESTRIAN SIGNAL HEADS)

NO SCALE

RSP ES-4B DATED OCTOBER 30, 2015 SUPERSEDES RSP ES-4B DATED JULY 19, 2013 AND STANDARD PLAN ES-4B DATED MAY 20, 2011 - PAGE 444 OF THE STANDARD PLANS BOOK DATED 2010.

REVISED STANDARD PLAN RSP ES-4B

2010 REVISED STANDARD PLAN RSP ES-4B

9-1-15

Dist	COUNTY	ROUTE	POST MILES TOTAL PROJECT	SHEET No.	TOTAL SHEETS
04	CC/Mrn	580	5.0/7.8, 0.0/3.3	473	579

Theresa Gabriel
REGISTERED ELECTRICAL ENGINEER

October 30, 2015
PLANS APPROVAL DATE

REGISTERED PROFESSIONAL ENGINEER Theresa Aziz Gabriel No. E15129 Exp. 6-30-16 ELECTRICAL STATE OF CALIFORNIA

THE STATE OF CALIFORNIA OR ITS OFFICERS OR AGENTS SHALL NOT BE RESPONSIBLE FOR THE ACCURACY OR COMPLETENESS OF SCANNED COPIES OF THIS PLAN SHEET.

TO ACCOMPANY PLANS DATED _____

VISORS

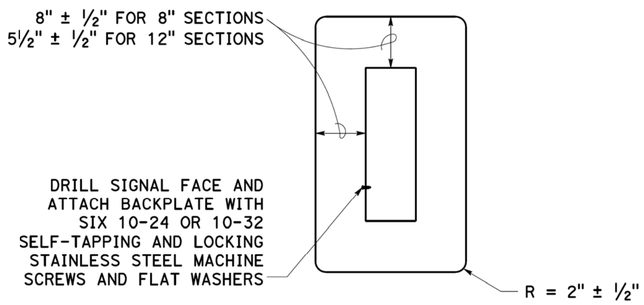

8" AND 12" SECTIONS

BACKPLATE

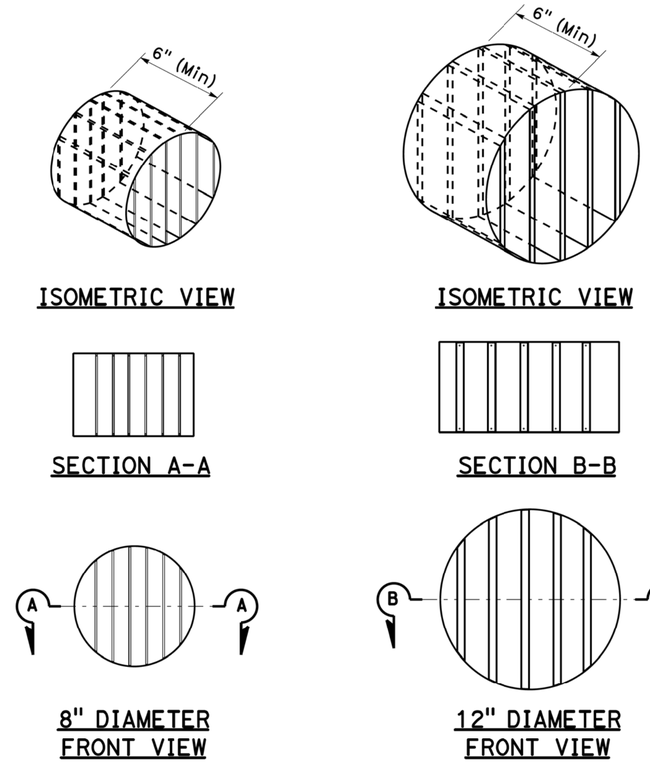

DIRECTIONAL LOUVER

Directional louvers shall be oriented and secured in place with one plated brass machine screw and nut.

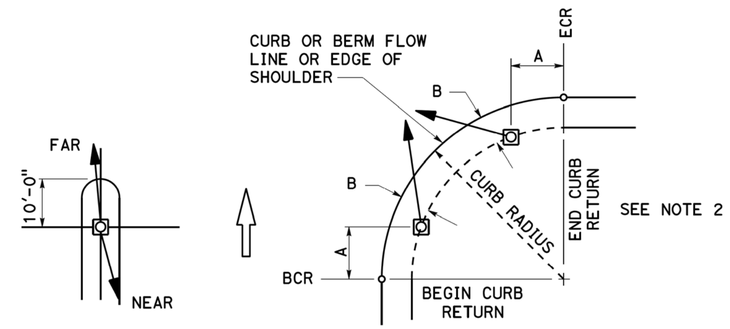

NOTES:

1. Typical signal pole placement unless dimensioned on plans.
2. For A and B dimensions, see Pole Schedule.

SIGNAL STANDARD PLACEMENT DIMENSIONS AND EQUIPMENT LOCATIONS

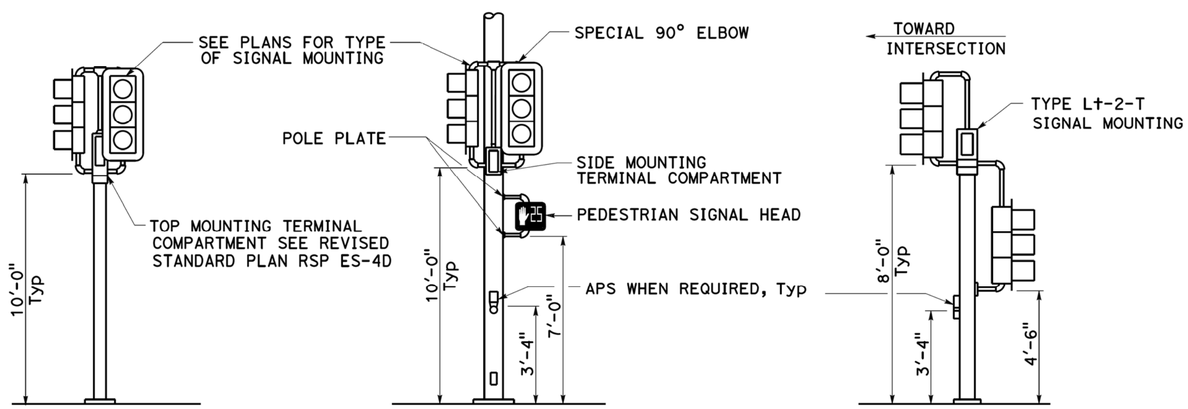

TOP MOUNTED SIGNALS (TV)
Type 1-A, 1-B, 1-C and 1-D standard as indicated on the plans

SIDE MOUNTED SIGNALS (SV AND SP)
Normally used on standards with luminaire or signal mast arm

LEFT TURN LANE SIGNAL
Type 1-A, 1-B, 1-C and 1-D standard as indicated on plans

TYPICAL SIGNAL HEAD INSTALLATIONS

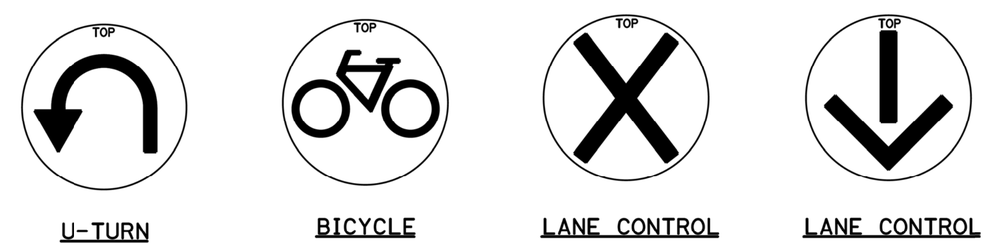

U-TURN | BICYCLE | LANE CONTROL | LANE CONTROL

SIGNAL FACES

STATE OF CALIFORNIA
DEPARTMENT OF TRANSPORTATION

ELECTRICAL SYSTEMS (SIGNAL HEADS AND MOUNTINGS)

NO SCALE

RSP ES-4C DATED OCTOBER 30, 2015 SUPERSEDES RSP ES-4C DATED JULY 19, 2013 AND STANDARD PLAN ES-4C DATED MAY 20, 2011 - PAGE 445 OF THE STANDARD PLANS BOOK DATED 2010.

REVISED STANDARD PLAN RSP ES-4C

2010 REVISED STANDARD PLAN RSP ES-4C

9-28-15

Dist	COUNTY	ROUTE	POST MILES TOTAL PROJECT	SHEET No.	TOTAL SHEETS
04	CC/Mrn	580	5.0/7.8, 0.0/3.3	474	579

Theresa Gabriel
REGISTERED ELECTRICAL ENGINEER

October 30, 2015
PLANS APPROVAL DATE

REGISTERED PROFESSIONAL ENGINEER Theresa Aziz Gabriel No. E15129 Exp. 6-30-16 ELECTRICAL STATE OF CALIFORNIA

THE STATE OF CALIFORNIA OR ITS OFFICERS OR AGENTS SHALL NOT BE RESPONSIBLE FOR THE ACCURACY OR COMPLETENESS OF SCANNED COPIES OF THIS PLAN SHEET.

TO ACCOMPANY PLANS DATED _____

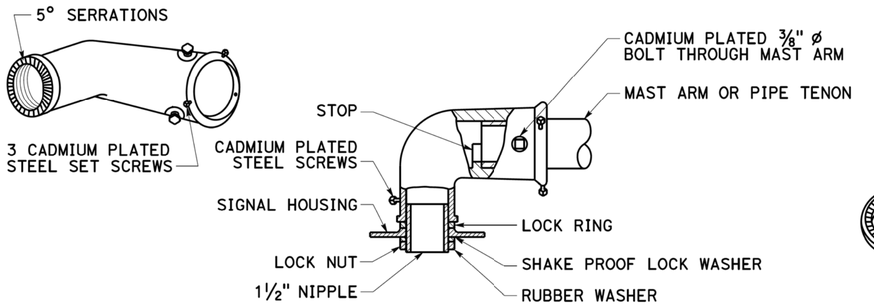

TYPE MAT
MAST ARM MOUNTING
For 2 NPS pipe, see Note 1.

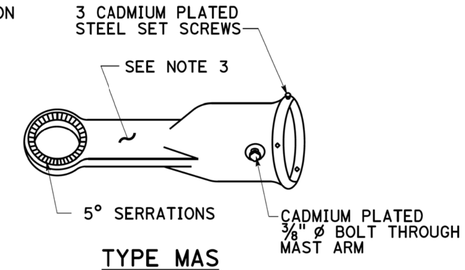

TYPE MAS
MAST ARM MOUNTING
For 2 NPS pipe, see Note 1.

SIGNAL SLIP FITTERS

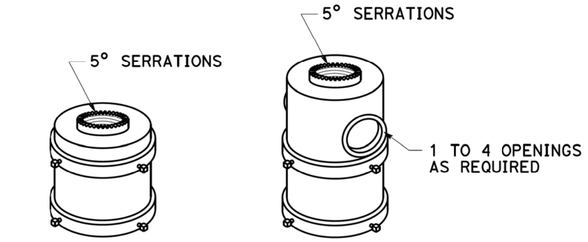

FOR ONE MOUNTING FOR MULTIPLE MOUNTINGS

TOP MOUNTINGS
For 4 NPS pipe, see Note 2.

NOTES:

1. After mast arm signal has been plumbed and secured, drill 7/16" hole through mast arm tenon in line with slip fitter hole. Place a cadmium plated ⅜" ø galvanized bolt with washer under bolt head through hole and secure with washer, nut, and locknut. Seal openings between mast arm mountings and mast arm with mastic.
2. (A) Threaded top mounted slip fitter openings shall be 1½ NPS.
   (B) Serrations in fittings shall match those on bottom of signal heads or in lock ring.
   (C) Top opening shall be offset when backplate is used.
3. Wireway shall have a cross section area of 0.95 square inch minimum. Minimum width of ½".

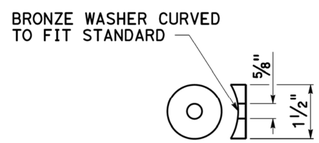

DETAIL C

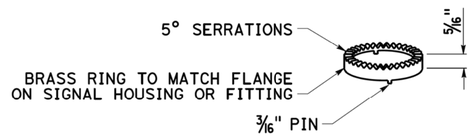

LOCK RING
Use where locking ring is not integral With signal housing or fitting.

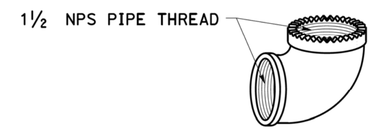

SPECIAL 90° ELBOW
One for each signal head, except those With special slip fitter mounting

MISCELLANEOUS MOUNTING HARDWARE

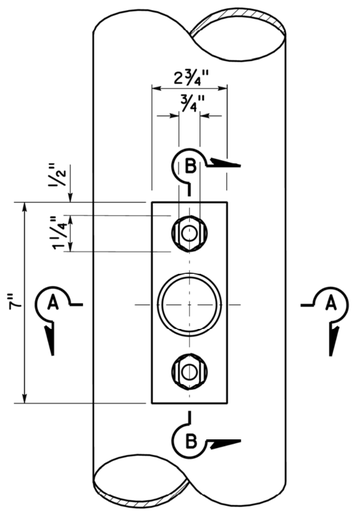

TOP VIEW

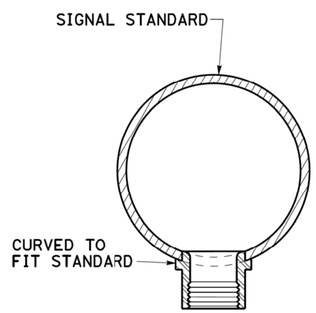

SECTION A-A

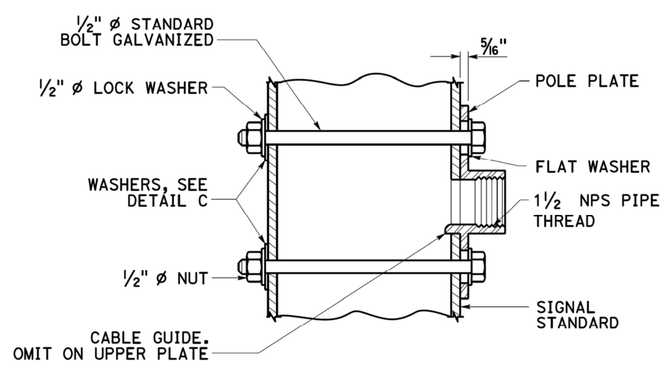

SECTION B-B

POLE PLATE FOR SIDE MOUNTED SIGNAL HEAD WITHOUT TERMINAL COMPARTMENT

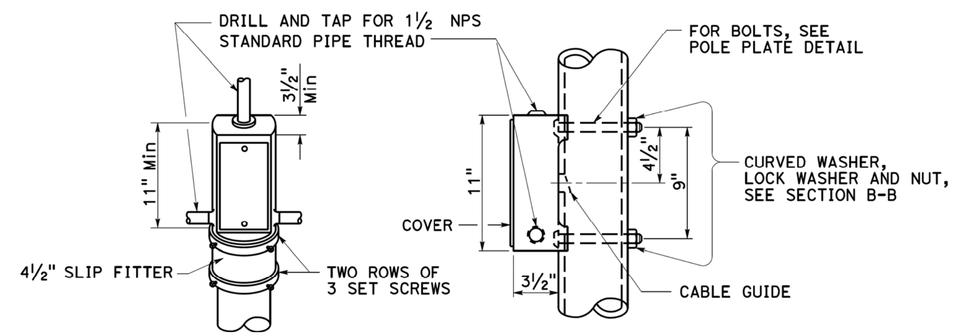

TOP MOUNTING **SIDE MOUNTING**

TERMINAL COMPARTMENT

STATE OF CALIFORNIA
DEPARTMENT OF TRANSPORTATION

ELECTRICAL SYSTEMS (SIGNAL HEAD MOUNTING)

NO SCALE

RSP ES-4D DATED OCTOBER 30, 2015 SUPERSEDES STANDARD PLAN ES-4D DATED MAY 20, 2011 - PAGE 446 OF THE STANDARD PLANS BOOK DATED 2010.

REVISED STANDARD PLAN RSP ES-4D

2010 REVISED STANDARD PLAN RSP ES-4D

8-20-15

Dist	COUNTY	ROUTE	POST MILES TOTAL PROJECT	SHEET No.	TOTAL SHEETS
04	CC/Mrn	580	5.0/7.8, 0.0/3.3	475	579

Theresa Gabriel
REGISTERED ELECTRICAL ENGINEER

October 30, 2015
PLANS APPROVAL DATE

REGISTERED PROFESSIONAL ENGINEER Theresa Aziz Gabriel No. E15129 Exp. 6-30-16 ELECTRICAL STATE OF CALIFORNIA

THE STATE OF CALIFORNIA OR ITS OFFICERS OR AGENTS SHALL NOT BE RESPONSIBLE FOR THE ACCURACY OR COMPLETENESS OF SCANNED COPIES OF THIS PLAN SHEET.

TO ACCOMPANY PLANS DATED _____

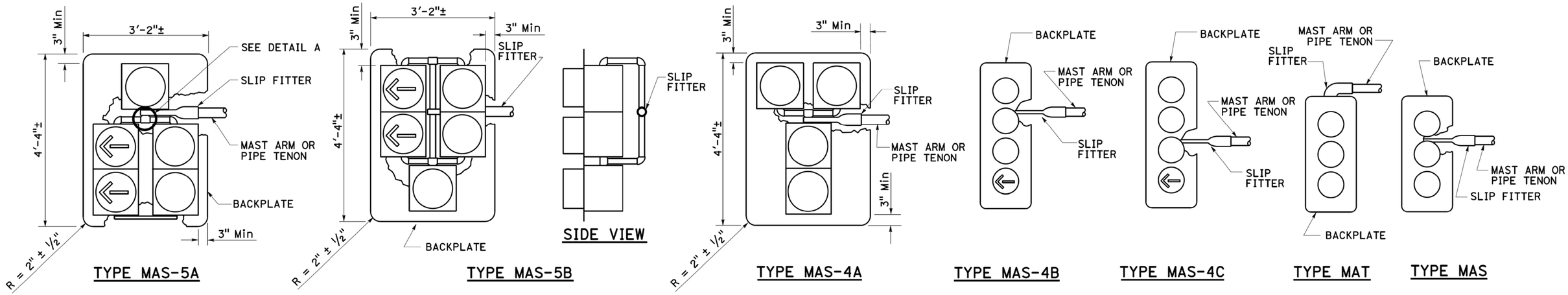

MAST ARM MOUNTINGS

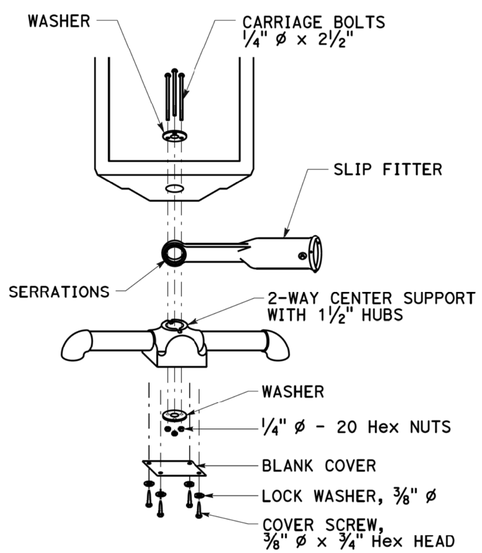

DETAIL A

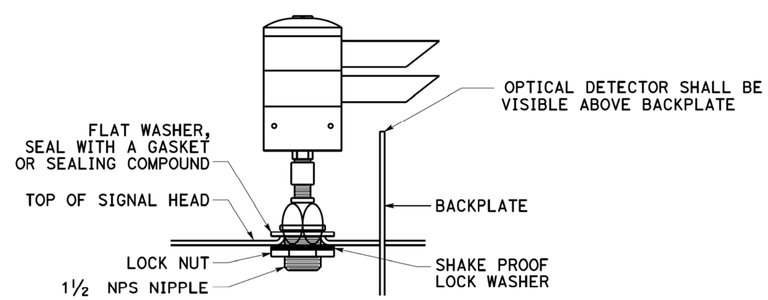

OPTICAL DETECTOR MOUNTING FOR EMERGENCY VEHICLE DETECTION

DETAIL B

STATE OF CALIFORNIA
DEPARTMENT OF TRANSPORTATION

ELECTRICAL SYSTEMS (SIGNAL HEADS AND OPTICAL DETECTOR MOUNTING)

NO SCALE

RSP ES-4E DATED OCTOBER 30, 2015 SUPERSEDES RSP ES-4E DATED JULY 19, 2013 AND STANDARD PLAN ES-4E DATED MAY 20, 2011 - PAGE 447 OF THE STANDARD PLANS BOOK DATED 2010.

REVISED STANDARD PLAN RSP ES-4E

2010 REVISED STANDARD PLAN RSP ES-4E

Dist	COUNTY	ROUTE	POST MILES TOTAL PROJECT	SHEET No.	TOTAL SHEETS
04	CC/Mrn	580	5.0/7.8, 0.0/3.3	476	579

Theresa Gabriel
REGISTERED ELECTRICAL ENGINEER

April 15, 2016
PLANS APPROVAL DATE

REGISTERED PROFESSIONAL ENGINEER
Theresa Aziz Gabriel
No. E15129
Exp. 6-30-16
ELECTRICAL
STATE OF CALIFORNIA

THE STATE OF CALIFORNIA OR ITS OFFICERS OR AGENTS SHALL NOT BE RESPONSIBLE FOR THE ACCURACY OR COMPLETENESS OF SCANNED COPIES OF THIS PLAN SHEET.

TO ACCOMPANY PLANS DATED _____

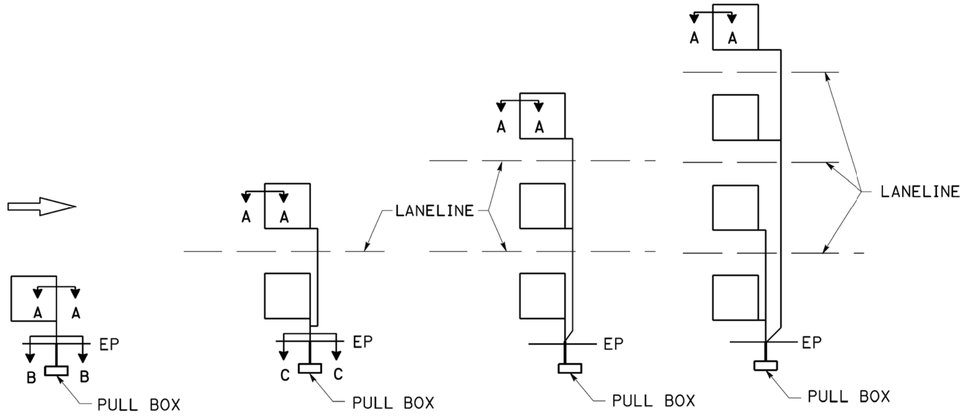

SAW CUT DETAILS

Type A loop detector configurations illustrated

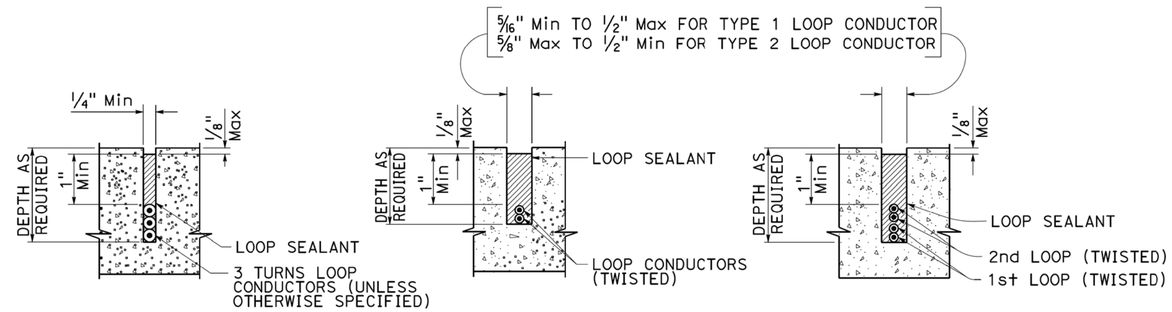

SECTION A-A SECTION B-B SECTION C-C

SLOT DETAILS - TYPE 1 AND TYPE 2 LOOP CONDUCTOR

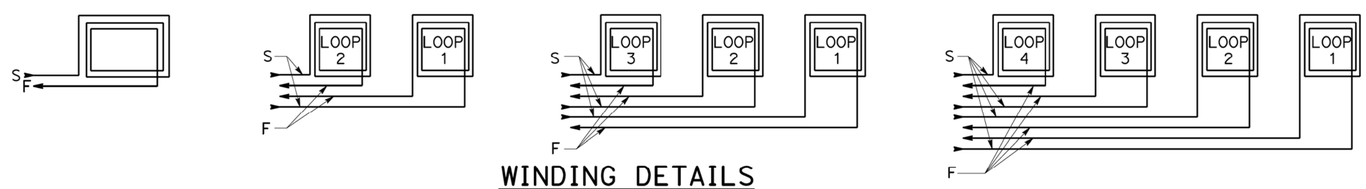

WINDING DETAILS

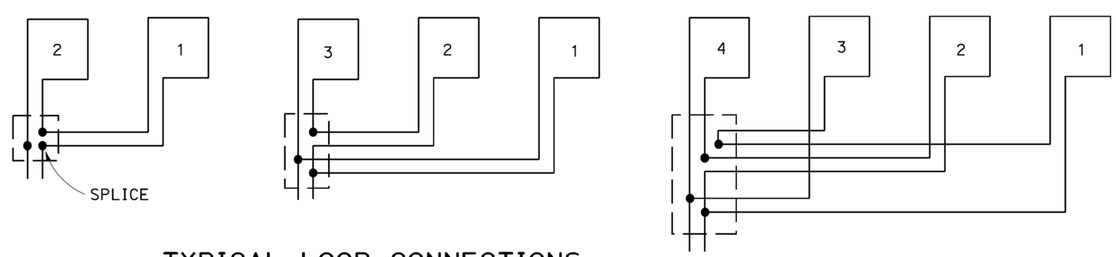

TYPICAL LOOP CONNECTIONS

Dashed lines represent the pull box

ABBREVIATIONS:

S - START
F - FINISH

STATE OF CALIFORNIA
DEPARTMENT OF TRANSPORTATION

ELECTRICAL SYSTEMS (LOOP DETECTORS)

NO SCALE

RSP ES-5A DATED APRIL 15, 2016 SUPERSEDES RSP ES-5A DATED OCTOBER 30, 2015 AND STANDARD PLAN ES-5A DATED MAY 20, 2011 - PAGE 448 OF THE STANDARD PLANS BOOK DATED 2010.

REVISED STANDARD PLAN RSP ES-5A

2010 REVISED STANDARD PLAN RSP ES-5A

1-12-16

Dist	COUNTY	ROUTE	POST MILES TOTAL PROJECT	SHEET No.	TOTAL SHEETS
04	CC/Mrn	580	5.0/7.8, 0.0/3.3	477	579

Theresa Gabriel
REGISTERED ELECTRICAL ENGINEER

April 15, 2016
PLANS APPROVAL DATE

REGISTERED PROFESSIONAL ENGINEER Theresa Aziz Gabriel No. E15129 Exp. 6-30-16 ELECTRICAL STATE OF CALIFORNIA

THE STATE OF CALIFORNIA OR ITS OFFICERS OR AGENTS SHALL NOT BE RESPONSIBLE FOR THE ACCURACY OR COMPLETENESS OF SCANNED COPIES OF THIS PLAN SHEET.

TO ACCOMPANY PLANS DATED _____

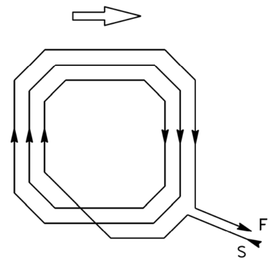

WINDING DETAIL

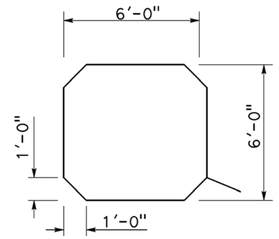

SAW CUT DETAIL

TYPE A LOOP DETECTOR CONFIGURATION

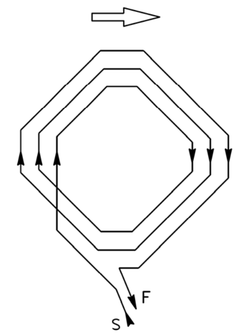

WINDING DETAIL

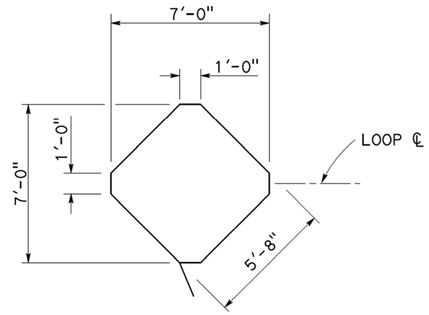

SAW CUT DETAIL

TYPE B LOOP DETECTOR CONFIGURATION

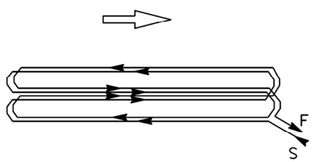

WINDING DETAIL

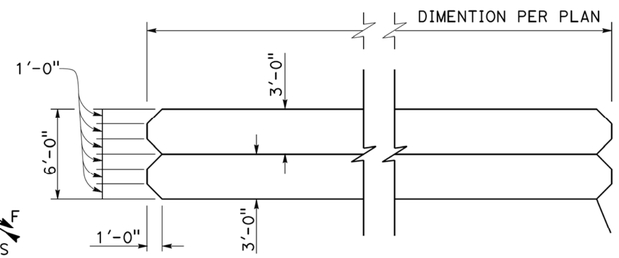

SAW CUT DETAIL

TYPE C LOOP DETECTOR CONFIGURATION

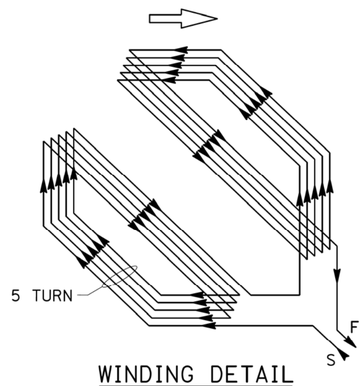

WINDING DETAIL

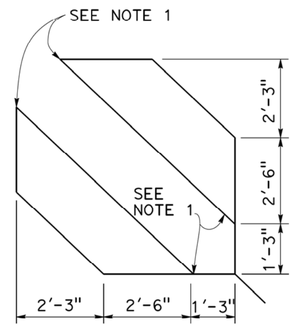

SAW CUT DETAIL

TYPE D LOOP DETECTOR CONFIGURATION

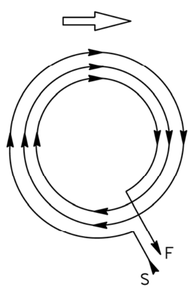

WINDING DETAIL

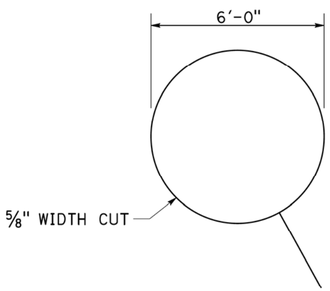

SAW CUT DETAIL

TYPE E LOOP DETECTOR CONFIGURATION

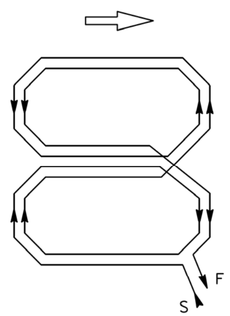

WINDING DETAIL

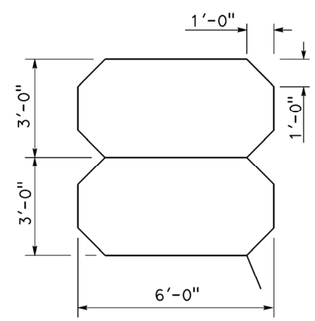

SAW CUT DETAIL

TYPE Q LOOP DETECTOR CONFIGURATION

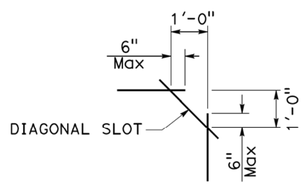

PLAN VIEW OF DIAGONAL SLOT AT CORNERS

NOTES:

1. Round corners of acute angle saw cuts to prevent damage to conductors.
2. Typical distance separating loops from edge to edge is 10' for Type A, B, D and E installation in single lane.
3. Use Type D loops for limit line detection and bicycle lanes.

STATE OF CALIFORNIA
DEPARTMENT OF TRANSPORTATION

ELECTRICAL SYSTEMS (DETECTORS)

NO SCALE

RSP ES-5B DATED APRIL 15, 2016 SUPERSEDES RSP ES-5B DATED OCTOBER 30, 2015 AND RSP ES-5B DATED JULY 19, 2013 AND STANDARD PLAN ES-5B DATED MAY 20, 2011 - PAGE 449 OF THE STANDARD PLANS BOOK DATED 2010.

REVISED STANDARD PLAN RSP ES-5B

2010 REVISED STANDARD PLAN RSP ES-5B

1-22-16

Dist	COUNTY	ROUTE	POST MILES TOTAL PROJECT	SHEET No.	TOTAL SHEETS
04	CC/Mrn	580	5.0/7.8, 0.0/3.3	478	579

Theresa Gabriel
REGISTERED ELECTRICAL ENGINEER

October 30, 2015
PLANS APPROVAL DATE

REGISTERED PROFESSIONAL ENGINEER
Theresa Aziz Gabriel
No. E15129
Exp. 6-30-16
ELECTRICAL
STATE OF CALIFORNIA

THE STATE OF CALIFORNIA OR ITS OFFICERS OR AGENTS SHALL NOT BE RESPONSIBLE FOR THE ACCURACY OR COMPLETENESS OF SCANNED COPIES OF THIS PLAN SHEET.

TO ACCOMPANY PLANS DATED _____

NOTES:

1. Back casting shape to fit curvature of pole.
2. Provide cover fitting for top of post, when PBA is mounted on push button assembly post.
3. Install push button on crosswalk side of standard.
4. Use R10 series regulatory signs and plaques for pedestrian and bicycle facilities.

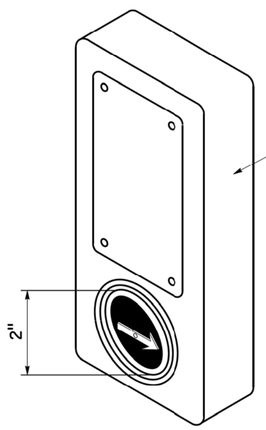

ACCESSIBLE PEDESTRIAN SIGNAL
DETAIL A

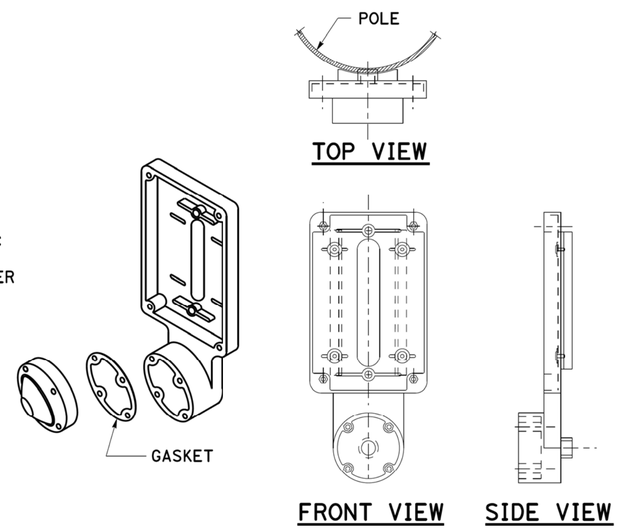

TYPE B PUSH BUTTON ASSEMBLY
DETAIL B

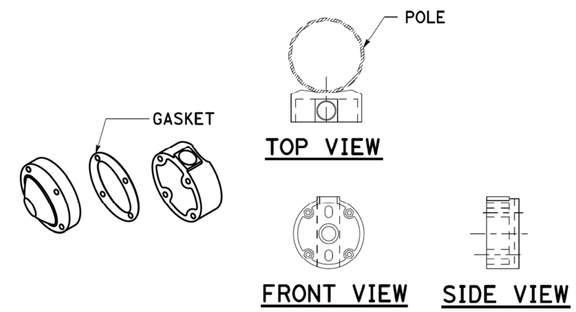

TYPE C PUSH BUTTON ASSEMBLY
DETAIL C

STATE OF CALIFORNIA
DEPARTMENT OF TRANSPORTATION

ELECTRICAL SYSTEMS (ACCESSIBLE PEDESTRIAN SIGNAL AND PUSH BUTTON ASSEMBLIES)

NO SCALE

RSP ES-5C DATED OCTOBER 30, 2015 SUPERSEDES RSP ES-5C DATED JULY 19, 2013 AND STANDARD PLAN ES-5C DATED MAY 20, 2011 - PAGE 450 OF THE STANDARD PLANS BOOK DATED 2010.

REVISED STANDARD PLAN RSP ES-5C

2010 REVISED STANDARD PLAN RSP ES-5C

8-24-15

Dist	COUNTY	ROUTE	POST MILES TOTAL PROJECT	SHEET No.	TOTAL SHEETS
04	CC/Mrn	580	5.0/7.8, 0.0/3.3	479	579

Theresa Gabriel
REGISTERED ELECTRICAL ENGINEER

October 30, 2015
PLANS APPROVAL DATE

REGISTERED PROFESSIONAL ENGINEER Theresa Aziz Gabriel No. E15129 Exp. 6-30-16 ELECTRICAL STATE OF CALIFORNIA

THE STATE OF CALIFORNIA OR ITS OFFICERS OR AGENTS SHALL NOT BE RESPONSIBLE FOR THE ACCURACY OR COMPLETENESS OF SCANNED COPIES OF THIS PLAN SHEET.

TO ACCOMPANY PLANS DATED _____

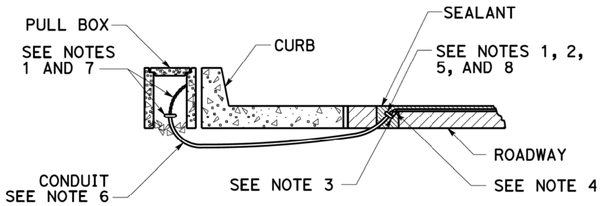

TYPE A CURB TERMINATION DETAIL

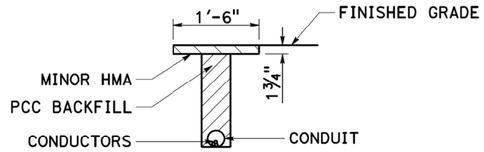

"T" TRENCH DETAIL T

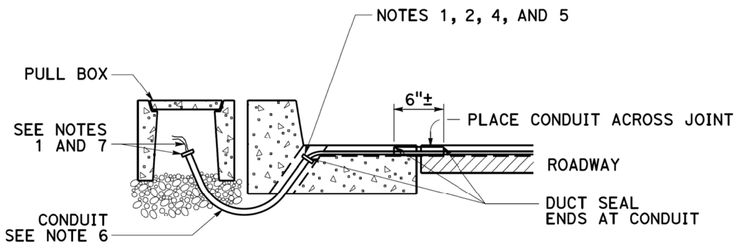

CROSS SECTION

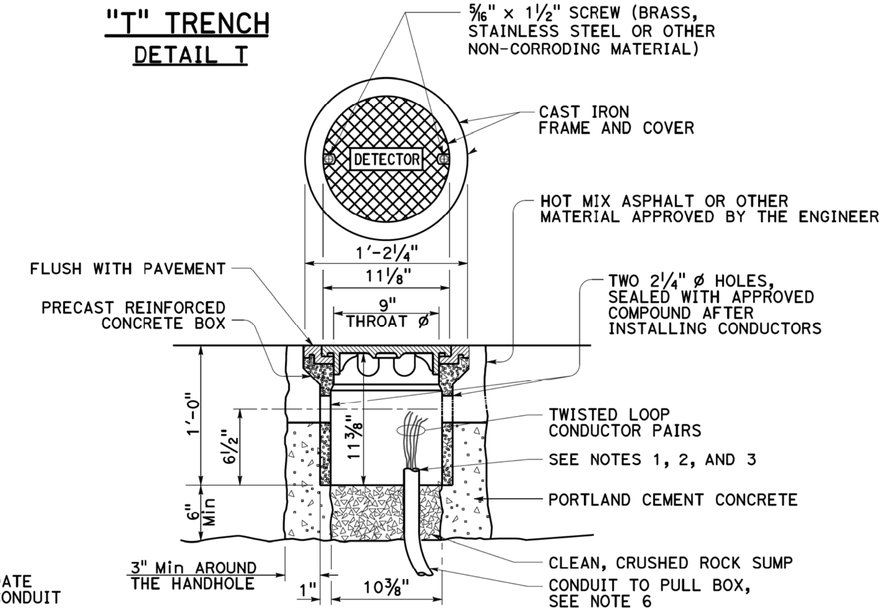

DETECTOR HANDHOLE DETAIL

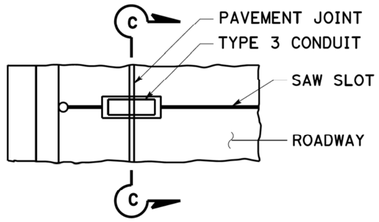

PLAN VIEW

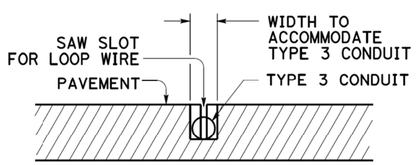

SECTION C-C

TYPE B CURB TERMINATION DETAIL

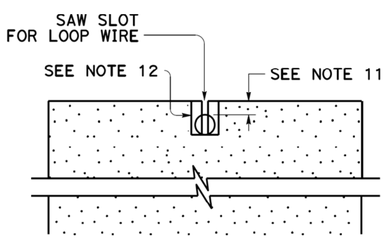

SECTION A-A

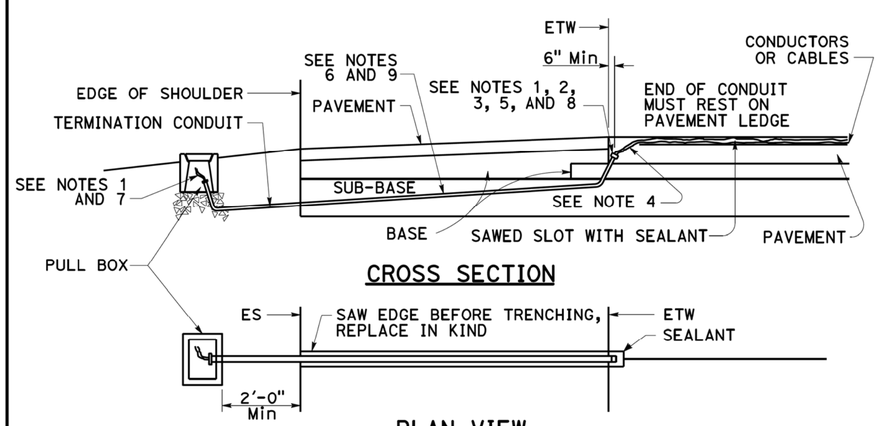

CROSS SECTION

PLAN VIEW

SHOULDER TERMINATION DETAILS

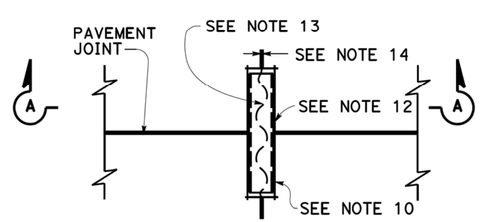

PLAN VIEW

TYPICAL LOOP LEAD-IN DETAIL AT PAVEMENT JOINT

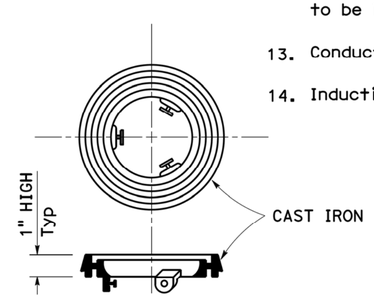

LOCKING GRADE RING

NOTES:

1. Bushing shall be used at end of conduit.
2. Tape detector conductors or cables 3" each side of bushings.
3. Install duct seal compound to each end of termination conduit before installing sealant.
4. Round all sharp edges where detector conductors or cables have to pass.
5. End of conduit shall be 3⅛" below roadway surface.
6.

Conduit size	Loop conductors
1"C minimum	1 to 2 pairs
1½"C minimum	3 to 4 pairs
2"C minimum	5 or more pairs

7. Splice detector conductors or cables to detector lead-in-cable.
8. Location of detector handhole when shown on plans.
9. When the shoulder and traveled way are paved with the same material and there is no joint between them, the conduit shall extend only 2'-0" into the shoulder pavement.
10. ¾"C, Type 3 conduit 6" long minimum, plug both ends with duct compound to keep out sealant.
11. ½" Minimum between top of conduit and pavement surface.
12. Sawcut shall not exceed 1" in width and ⅛" longer than conduit to be installed.
13. Conductors with ½" minimum slack inside conduit.
14. Inductive loop detector saw slot.

STATE OF CALIFORNIA
DEPARTMENT OF TRANSPORTATION

ELECTRICAL SYSTEMS (CURB AND SHOULDER TERMINATION, TRENCH, AND HANDHOLE DETAILS)

NO SCALE

RSP ES-5D DATED OCTOBER 30, 2015 SUPERSEDES RSP ES-5D DATED JULY 19, 2013 AND STANDARD PLAN ES-5D DATED MAY 20, 2011 - PAGE 451 OF THE STANDARD PLANS BOOK DATED 2010.

REVISED STANDARD PLAN RSP ES-5D

2010 REVISED STANDARD PLAN RSP ES-5D

8-19-15

Dist	COUNTY	ROUTE	POST MILES TOTAL PROJECT	SHEET No.	TOTAL SHEETS
04	CC/Mrn	580	5.0/7.8, 0.0/3.3	480	579

REGISTERED CIVIL ENGINEER

July 15, 2016
PLANS APPROVAL DATE

REGISTERED PROFESSIONAL ENGINEER Stanley P. Johnson No. C57793 Exp. 3-31-18 CIVIL STATE OF CALIFORNIA

THE STATE OF CALIFORNIA OR ITS OFFICERS OR AGENTS SHALL NOT BE RESPONSIBLE FOR THE ACCURACY OR COMPLETENESS OF SCANNED COPIES OF THIS PLAN SHEET.

TO ACCOMPANY PLANS DATED _____

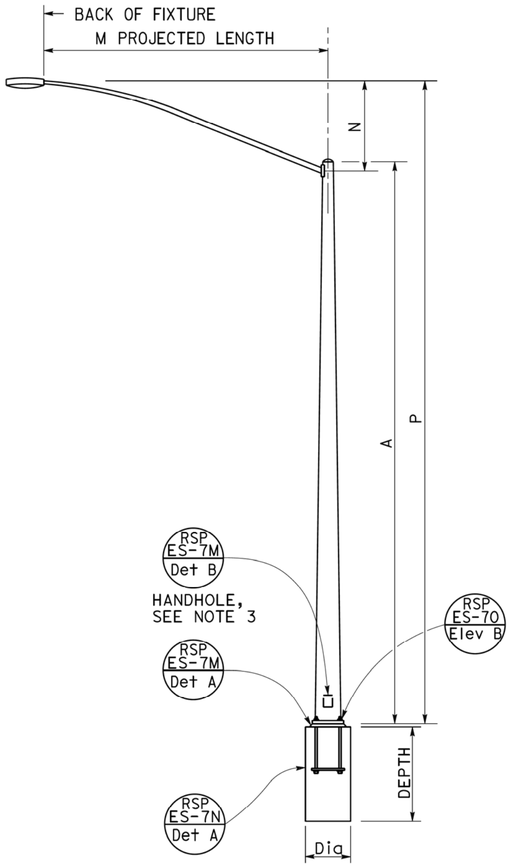

TYPE 15 AND TYPE 21
ELEVATION A

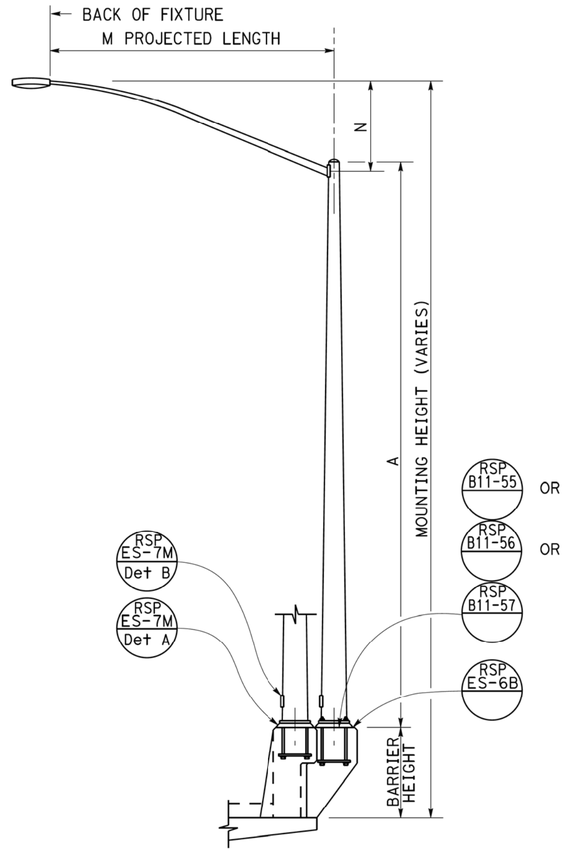

TYPE 15 AND TYPE 21 BARRIER RAIL MOUNTED
ELEVATION B

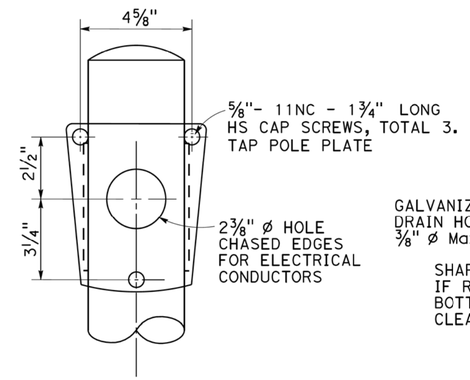

FRONT VIEW

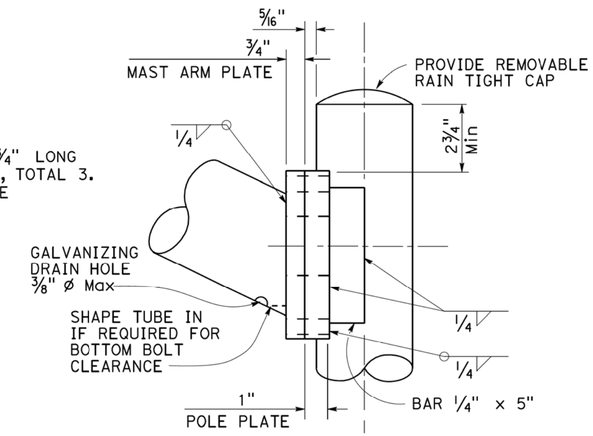

SIDE VIEW

LUMINAIRE MAST ARM CONNECTION
DETAIL R

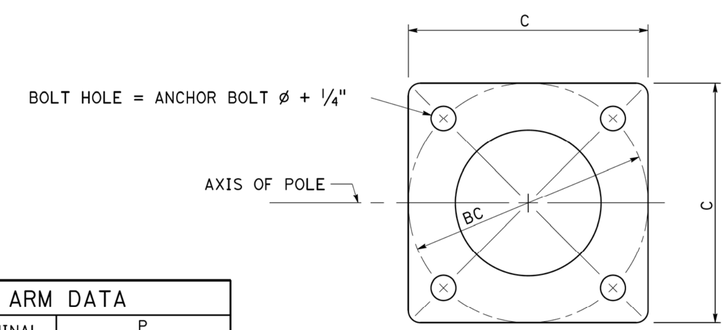

BASE PLATE
DETAIL A

POLE TYPE	POLE DATA				BASE PLATE DATA				CIDH PILE FOUNDATION	
	A HEIGHT	Min OD BASE	Min OD TOP	WALL THICKNESS	C	BC = BOLT CIRCLE	THICKNESS	ANCHOR BOLT SIZE	Dia	DEPTH
15	30'-0"	8"	3 11/16"	0.1196"	1'-0"	1'-0"	1 1/2"	1" ø x 36" *	2'-6"	6'-0"
21	35'-0"	8 5/8"	3 9/16"	0.1793"			2"	1 1/4" ø x 36" *		7'-0"

* FOR BARRIER RAIL BOLTS, SEE REVISED STANDARD PLAN RSP ES-6B.

LUMINAIRE MAST ARM DATA					
M PROJECTED LENGTH	N RISE	Min OD AT POLE	NOMINAL THICKNESS	P TYPE 15	P TYPE 21
6'-0"	2'-0"±	3 1/4"	0.1196"	31'-6"±	36'-6"±
8'-0"	2'-6"±	3 1/2"		32'-0"±	37'-0"±
10'-0"	3'-3"±	3 7/8"		32'-9"±	37'-9"±
12'-0"	4'-3"±			33'-9"±	38'-9"±
15'-0"	4'-9"±	4 1/4"		34'-3"±	39'-3"±

NOTES:

1. ☐ Indicates mast arm length to be used unless otherwise noted on the plans.
2. For Type 15-SB, use Type 15 standard with Type 30 slip base plate details, see Revised Standard Plan RSP ES-6F.
3. Handhole shall be located on the downstream side of traffic.
4. For additional notes and details, see Revised Standard Plans RSP ES-7M and RSP ES-7N.

STATE OF CALIFORNIA
DEPARTMENT OF TRANSPORTATION

ELECTRICAL SYSTEMS (LIGHTING STANDARD, TYPES 15 AND 21)

NO SCALE

RSP ES-6A DATED JULY 15, 2016 SUPERSEDES RSP ES-6A DATED OCTOBER 30, 2015 AND STANDARD PLAN ES-6A DATED MAY 20, 2011 - PAGE 452 OF THE STANDARD PLANS BOOK DATED 2010.

REVISED STANDARD PLAN RSP ES-6A

2010 REVISED STANDARD PLAN RSP ES-6A

6-20-16

Dist	COUNTY	ROUTE	POST MILES TOTAL PROJECT	SHEET No.	TOTAL SHEETS
04	CC/Mrn	580	5.0/7.8, 0.0/3.3	481	579

REGISTERED CIVIL ENGINEER

July 15, 2016
PLANS APPROVAL DATE

REGISTERED PROFESSIONAL ENGINEER
Stanley P. Johnson
No. C57793
Exp. 3-31-18
CIVIL
STATE OF CALIFORNIA

THE STATE OF CALIFORNIA OR ITS OFFICERS OR AGENTS SHALL NOT BE RESPONSIBLE FOR THE ACCURACY OR COMPLETENESS OF SCANNED COPIES OF THIS PLAN SHEET.

TO ACCOMPANY PLANS DATED _____

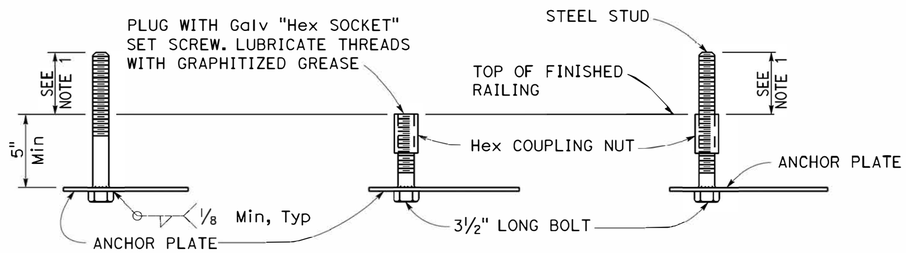

FOR IMMEDIATE INSTALLATION
DETAIL B-1

FOR FUTURE INSTALLATION WITH PLUG
DETAIL B-2

FOR INSTALLATION ON FUTURE ANCHORAGE WITH STUD
DETAIL B-3

ELECTROLIER ANCHORAGES
DETAIL B

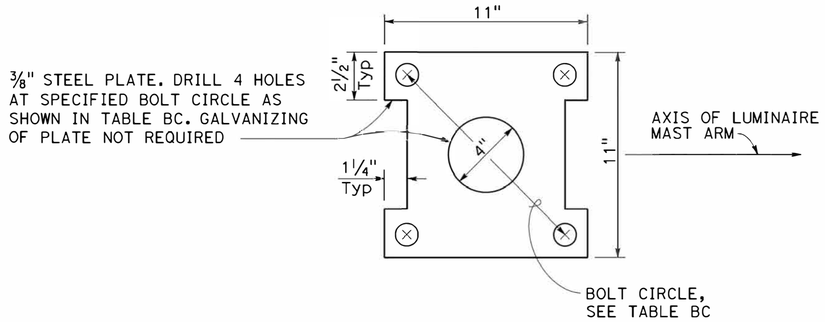

ANCHOR PLATE
DETAIL A

TABLE BC				
TYPE	BC = BOLT CIRCLE	ANCHOR BOLT DIAMETER	COUPLING NUT BASIC LENGTH	SET SCREW LENGTH DETAIL B-2
15	1'-0"	1"	3"	1 1/2"
21		1 1/4"	3 3/4"	1 7/8"

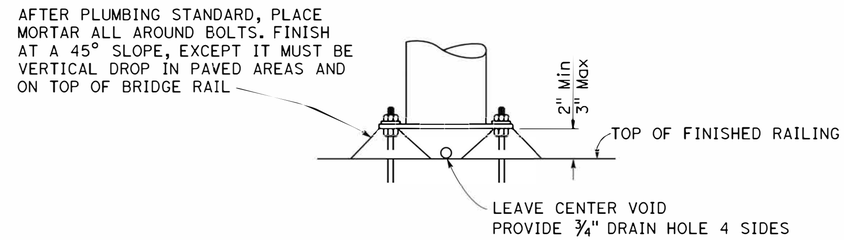

GROUTING AT ELECTROLIER
DETAIL N

NOTES:

1. Anchor bolt or stud length shall be such that thread extends 1/2" maximum above nut on level base plate after grouting. See Detail N.
2. Electrolier anchor bolts shall be held in position for pouring by means of anchor plates and suitable templates. Deviation from the true position, vertical and height shall not exceed 1/16".
3. See railing sheets for reinforcement and structural details at electroliers and pull boxes.

STATE OF CALIFORNIA
DEPARTMENT OF TRANSPORTATION

ELECTRICAL SYSTEMS (ELECTROLIER ANCHORAGE AND GROUTING FOR TYPE 15 AND TYPE 21 BARRIER RAIL MOUNTED)

NO SCALE

RSP ES-6B DATED JULY 15, 2016 SUPERSEDES STANDARD PLAN ES-6B DATED MAY 20, 2011 - PAGE 453 OF THE STANDARD PLANS BOOK DATED 2010.

REVISED STANDARD PLAN RSP ES-6B

2010 REVISED STANDARD PLAN RSP ES-6B

6-20-16

Dist	COUNTY	ROUTE	POST MILES TOTAL PROJECT	SHEET No.	TOTAL SHEETS
04	CC/Mrn	580	5.0/7.8, 0.0/3.3	482	579

REGISTERED CIVIL ENGINEER

July 15, 2016
PLANS APPROVAL DATE

REGISTERED PROFESSIONAL ENGINEER
Stanley P. Johnson
No. C57793
Exp. 3-31-18
CIVIL
STATE OF CALIFORNIA

THE STATE OF CALIFORNIA OR ITS OFFICERS OR AGENTS SHALL NOT BE RESPONSIBLE FOR THE ACCURACY OR COMPLETENESS OF SCANNED COPIES OF THIS PLAN SHEET.

TO ACCOMPANY PLANS DATED _____

2010 REVISED STANDARD PLAN RSP ES-6E

LUMINAIRE MAST ARM DATA			
PROJECTED LENGTH	THICKNESS	MINIMUM OD AT POLE	MOUNTING HEIGHT
* 6'-0"	0.1196"	3¼"	36'-9"±
* 8'-0"		3½"	37'-3"±
* 10'-0"		3⅞"	38'-0"±
* 12'-0"			39'-0"±
* 15'-0"		4¼"	39'-6"±
** 20'-0"	0.1793"	5"	37'-0"±

* TYPE 30
** TYPE 31

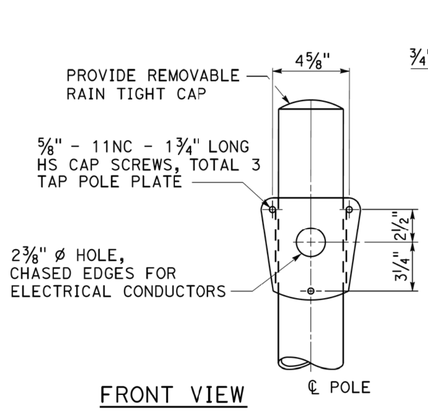

FRONT VIEW

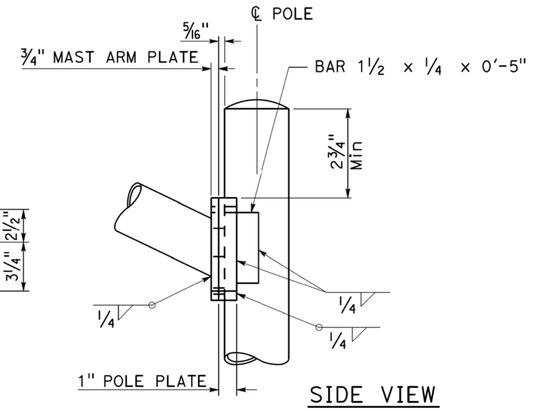

SIDE VIEW

TYPE 30 DETAIL A

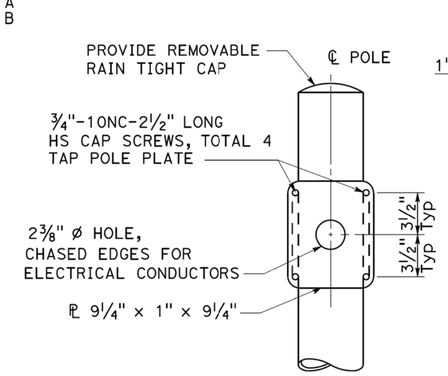

FRONT VIEW

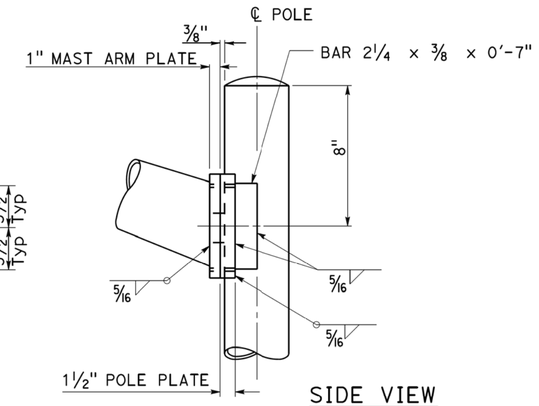

SIDE VIEW

TYPE 31 DETAIL B

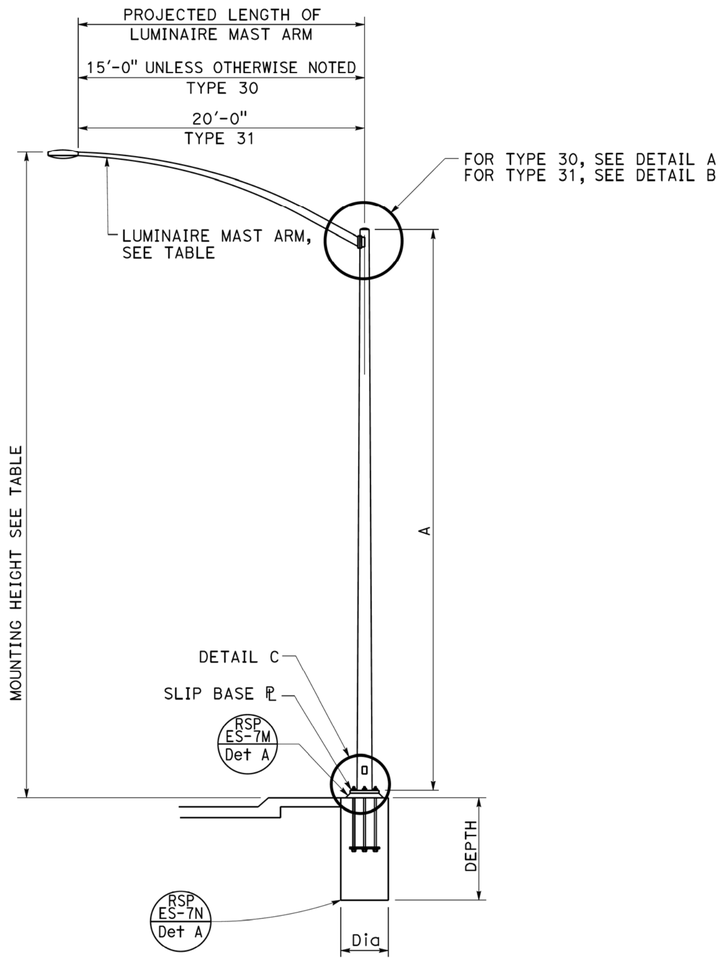

ELEVATION A

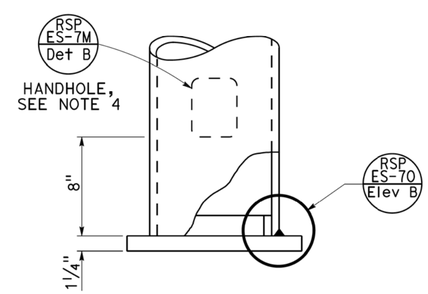

DETAIL C

NOTES:

1. For slip base plate details, see Revised Standard Plan RSP ES-6F.
2. For Type 30 fixed base use Type 15 base plate and foundation shown on Revised Standard Plan RSP ES-6A. Use 1¼" Dia x 3'-6" anchor bolts.
3. For Type 31 fixed base use Type 32 base plate, anchor bolts and foundation on Revised Standard Plan RSP ES-6G.
4. Handhole shall be located on the downstream side of traffic.
5. For additional notes and details, see Revised Standard Plans RSP ES-7M and RSP ES-7N.

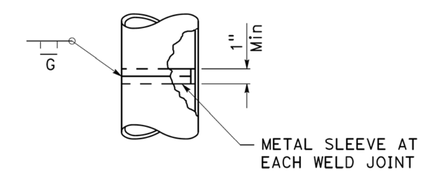

POLE SPLICE

POLE TYPE	POLE DATA				CIDH PILE FOUNDATION	
	A HEIGHT	Min OD BASE	Min OD TOP	Min THICKNESS	Dia	DEPTH
30	35'-0"	8¾"	3 11/16"	0.1196"	2'-6"	7'-0"
31		10¾"	5 11/16"	0.1793"	3'-0"	8'-0"

STATE OF CALIFORNIA
DEPARTMENT OF TRANSPORTATION

ELECTRICAL SYSTEMS (LIGHTING STANDARD, TYPES 30 AND 31)

NO SCALE

RSP ES-6E DATED JULY 15, 2016 SUPERSEDES RSP ES-6E DATED OCTOBER 30, 2015 AND STANDARD PLAN ES-6E DATED MAY 20, 2011 - PAGE 456 OF THE STANDARD PLANS BOOK DATED 2010.

REVISED STANDARD PLAN RSP ES-6E

6-20-16

Dist	COUNTY	ROUTE	POST MILES TOTAL PROJECT	SHEET No.	TOTAL SHEETS
04	CC/Mrn	580	5.0/7.8, 0.0/3.3	483	579

REGISTERED CIVIL ENGINEER

October 30, 2015

PLANS APPROVAL DATE

REGISTERED PROFESSIONAL ENGINEER Stanley P. Johnson No. C57793 Exp. 3-31-16 CIVIL STATE OF CALIFORNIA

THE STATE OF CALIFORNIA OR ITS OFFICERS OR AGENTS SHALL NOT BE RESPONSIBLE FOR THE ACCURACY OR COMPLETENESS OF SCANNED COPIES OF THIS PLAN SHEET.

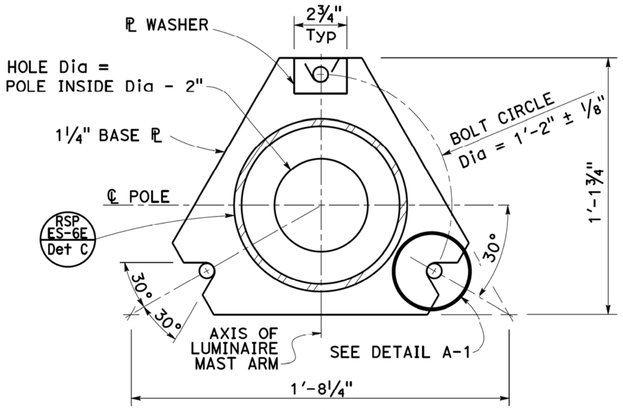

BASE PLATE
DETAIL A

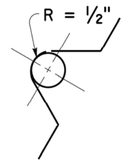

DETAIL A-1

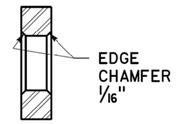

SECTION A-A

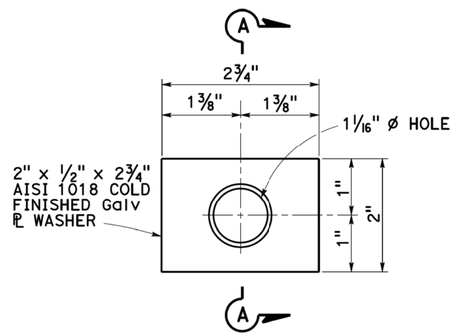

PLATE WASHER
DETAIL D

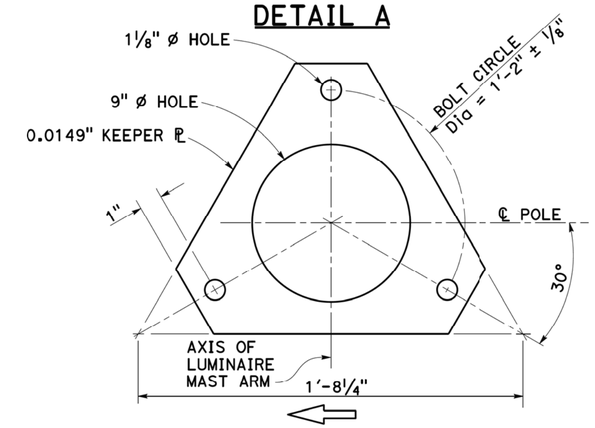

KEEPER PLATE
DETAIL B

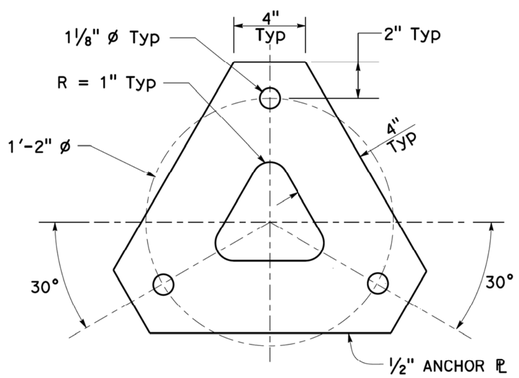

ANCHOR PLATE
DETAIL E

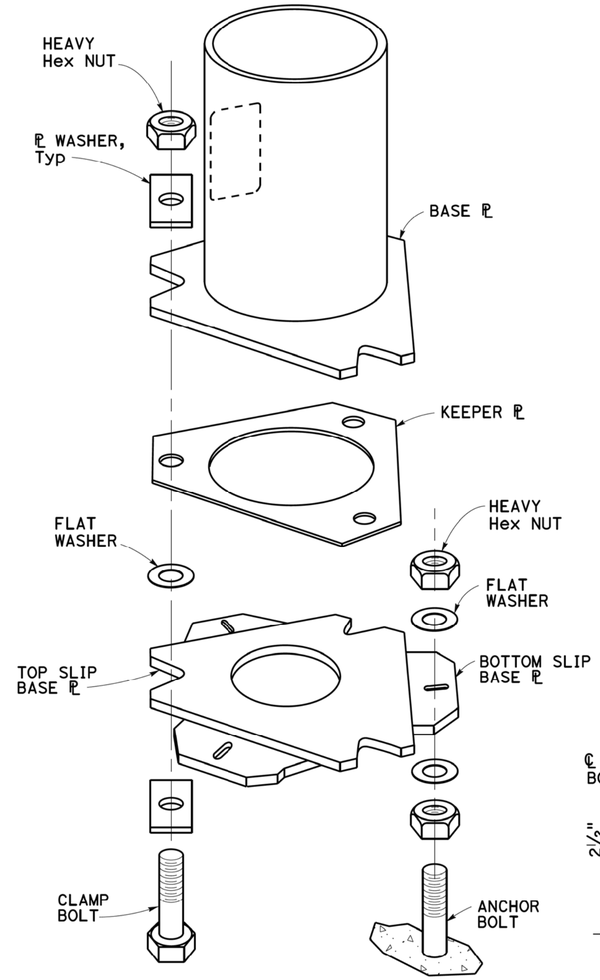

SLIP BASE DETAIL
DETAIL F

NOTES:

TO ACCOMPANY PLANS DATED _____

1. 1" ø HS anchor bolts. For clamp bolts, see specifications.
2. Conduit shall not protrude more than 2" above top of foundation.
3. Handhole shall be located on the downstream side of traffic.
4. For Type 30 fixed base and for Type 31 fixed base, see Notes 3 and 4 on Revised Standard Plan RSP ES-6E.

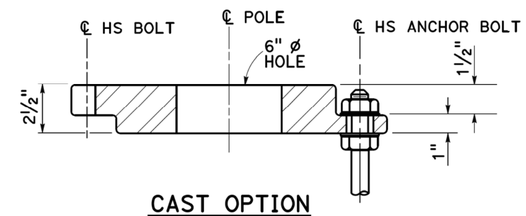

CAST OPTION

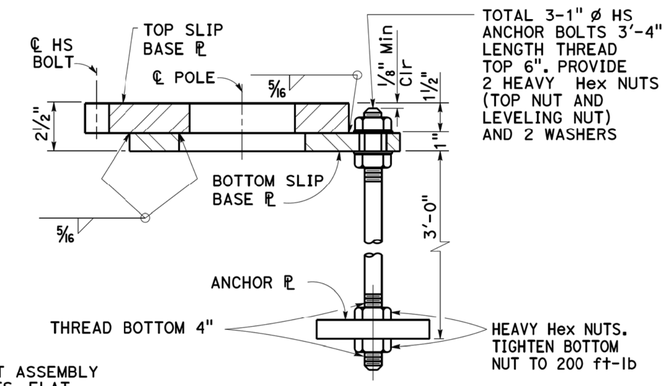

WELDED OPTION

SECTION B-B

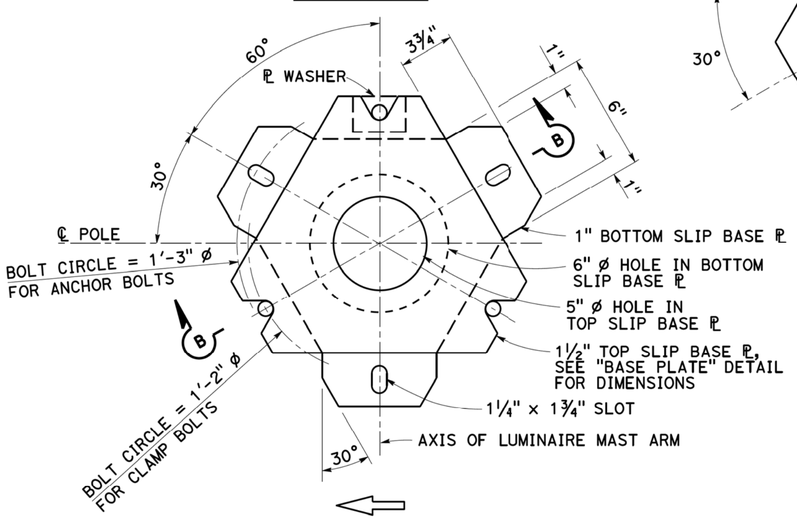

BOTTOM PLATE
DETAIL C

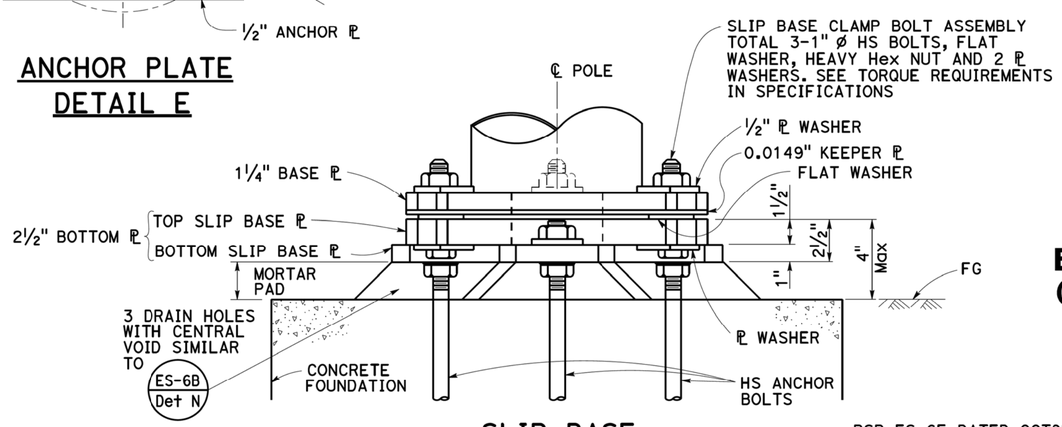

SLIP BASE
ELEVATION A

STATE OF CALIFORNIA
DEPARTMENT OF TRANSPORTATION

ELECTRICAL SYSTEMS (LIGHTING STANDARD, SLIP BASE PLATE)

NO SCALE

RSP ES-6F DATED OCTOBER 30, 2015 SUPERSEDES STANDARD PLAN ES-6F DATED MAY 20, 2011 - PAGE 457 OF THE STANDARD PLANS BOOK DATED 2010.

REVISED STANDARD PLAN RSP ES-6F

2010 REVISED STANDARD PLAN RSP ES-6F

8-20-15

Dist	COUNTY	ROUTE	POST MILES TOTAL PROJECT	SHEET No.	TOTAL SHEETS
04	CC/Mrn	580	5.0/7.8, 0.0/3.3	484	579

REGISTERED CIVIL ENGINEER

July 15, 2016

PLANS APPROVAL DATE

REGISTERED PROFESSIONAL ENGINEER Stanley P. Johnson No. C57793 Exp. 3-31-18 CIVIL STATE OF CALIFORNIA

THE STATE OF CALIFORNIA OR ITS OFFICERS OR AGENTS SHALL NOT BE RESPONSIBLE FOR THE ACCURACY OR COMPLETENESS OF SCANNED COPIES OF THIS PLAN SHEET.

TO ACCOMPANY PLANS DATED _____

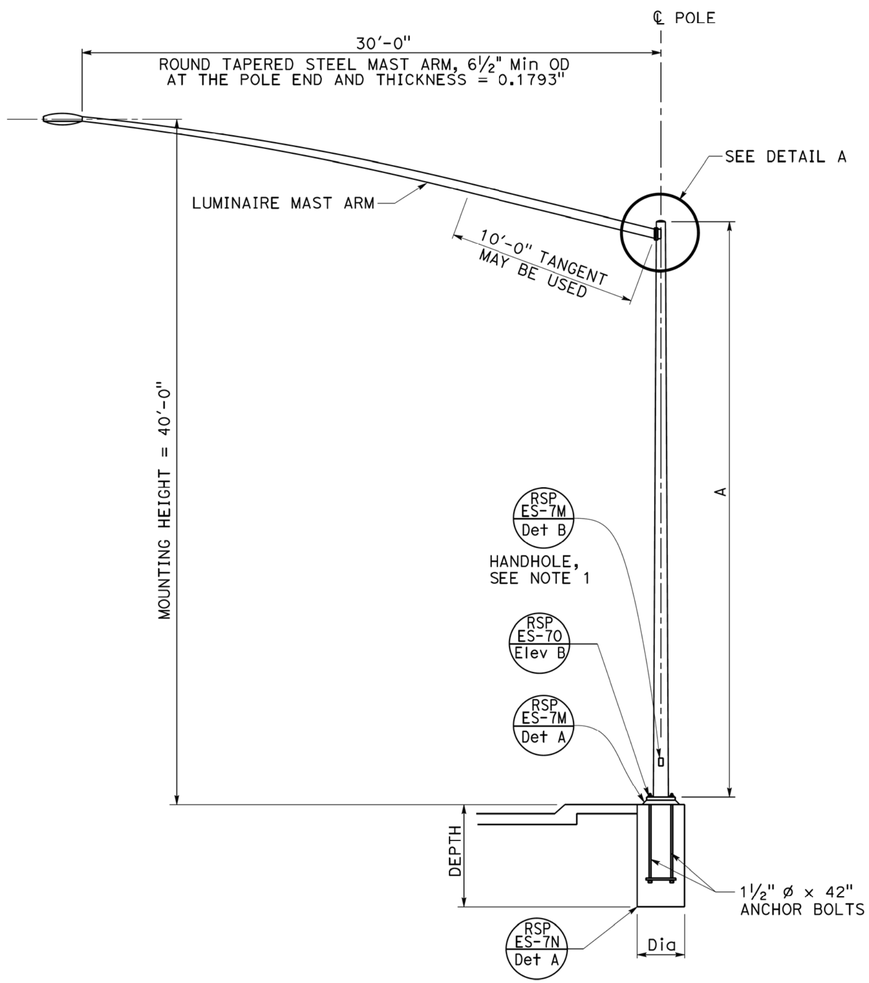

ELEVATION A

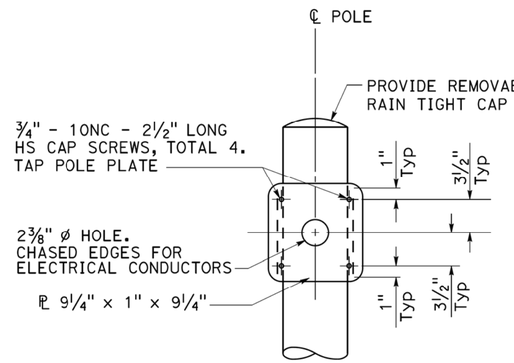

FRONT VIEW

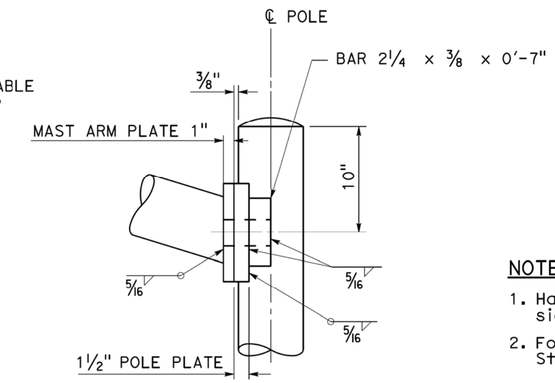

SIDE VIEW

DETAIL A

NOTES:

1. Handhole shall be located on the downstream side of traffic.
2. For additional notes and details, see Revised Standard Plans RSP ES-7M and RSP ES-7N.

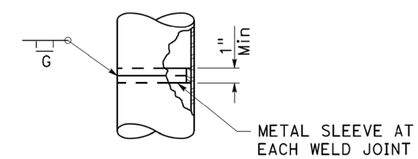

POLE SPLICE
DETAIL B

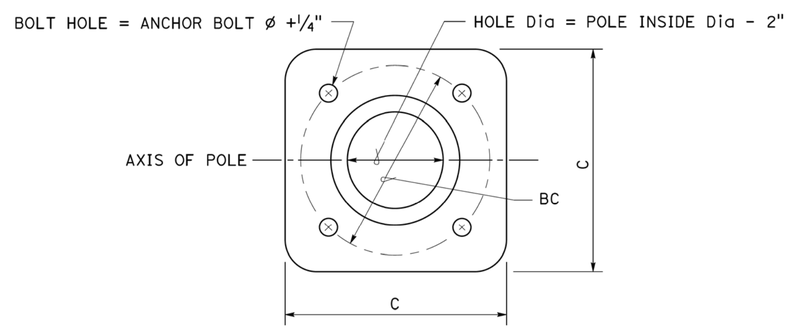

PLAN

BASE PLATE DETAIL
DETAIL C

POLE TYPE	POLE DATA				BASE PLATE DATA				CIDH PILE FOUNDATION	
	A HEIGHT	Min OD BASE	Min OD TOP	Min THICKNESS	C	BC = BOLT CIRCLE	THICKNESS	ANCHOR BOLT SIZE	Dia	DEPTH
32	35'-0"	10¾"	5 11/16"	0.1793"	1'-5"	1'-3"	2"	1½" ø x 42"	3'-0"	8'-0"

STATE OF CALIFORNIA
DEPARTMENT OF TRANSPORTATION

ELECTRICAL SYSTEMS (LIGHTING STANDARD, TYPE 32)

NO SCALE

RSP ES-6G DATED JULY 15, 2016 SUPERSEDES RSP ES-6G DATED OCTOBER 30, 2015 AND STANDARD PLAN ES-6G DATED MAY 20, 2011 - PAGE 458 OF THE STANDARD PLANS BOOK DATED 2010.

REVISED STANDARD PLAN RSP ES-6G

2010 REVISED STANDARD PLAN RSP ES-6G

6-20-16

Dist	COUNTY	ROUTE	POST MILES TOTAL PROJECT	SHEET No.	TOTAL SHEETS
04	CC/Mrn	580	5.0/7.8, 0.0/3.3	485	579

REGISTERED CIVIL ENGINEER

July 15, 2016
PLANS APPROVAL DATE

REGISTERED PROFESSIONAL ENGINEER
Stanley P. Johnson
No. C57793
Exp. 3-31-18
CIVIL
STATE OF CALIFORNIA

THE STATE OF CALIFORNIA OR ITS OFFICERS OR AGENTS SHALL NOT BE RESPONSIBLE FOR THE ACCURACY OR COMPLETENESS OF SCANNED COPIES OF THIS PLAN SHEET.

TO ACCOMPANY PLANS DATED _____

2010 REVISED STANDARD PLAN RSP ES-7A

NOTES:

1. For additional notes, details and data for Type 15TS and Type 21TS Standards, see Revised Standard Plan RSP ES-6A.
2. Handhole shall be located on the downstream side of traffic.

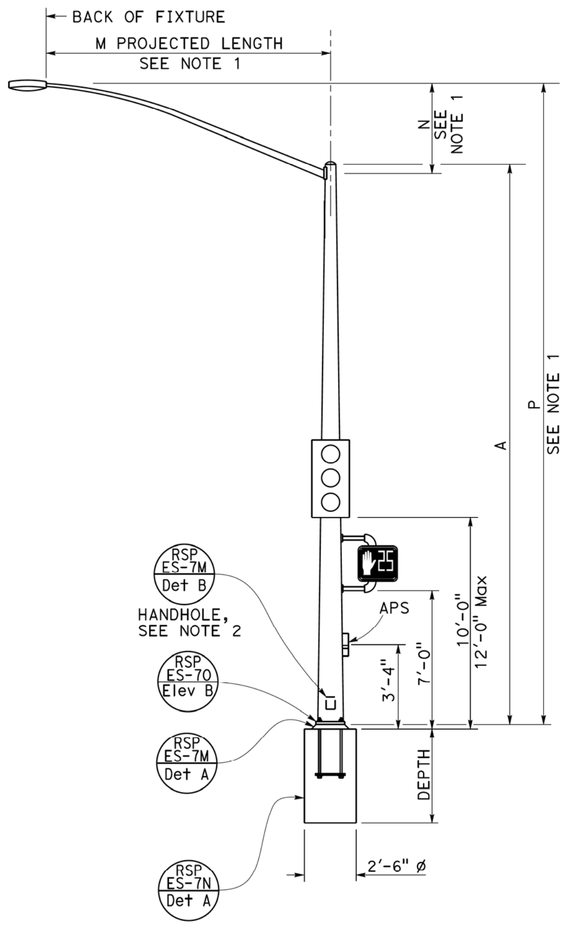

TYPE 15TS AND 21TS STANDARD

ELEVATION A

(See Note 1)

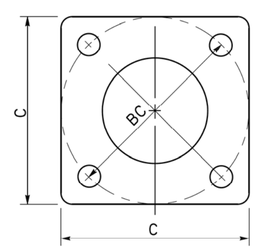

BASE PLATE

TYPE 15TS AND 21TS

DETAIL A

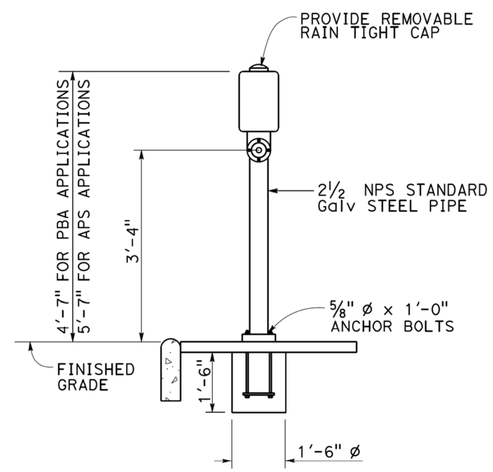

ELEVATION

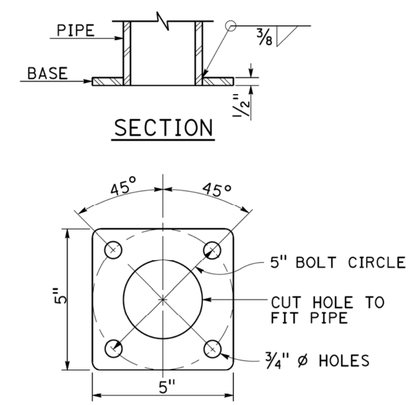

BASE PLATE

PBA POST

PUSH BUTTON ASSEMBLY POST

DETAIL B

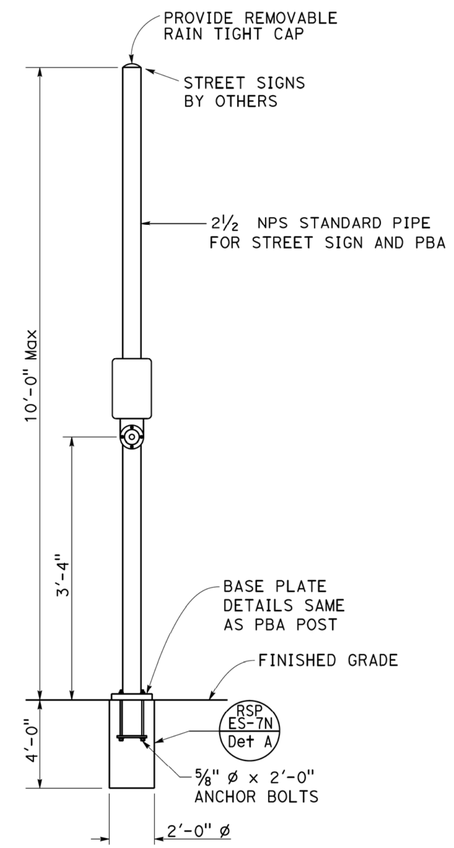

COMBINED STREET SIGN
PUSH BUTTON ASSEMBLY POST

DETAIL C

POLE TYPE	POLE DATA				BASE PLATE DATA				CIDH
	A HEIGHT	Min OD BASE	Min OD TOP	WALL THICKNESS	C	BC = BOLT CIRCLE	THICKNESS	ANCHOR BOLT SIZE	DEPTH
15TS	30'-0"	8"	3 11/16"	0.1793"	1'-1½"	1'-0"	2"	1½" ø x 42"	7'-6"
21TS	35'-0"	9⅜"	3 9/16"		1'-3"	1'-2"			8'-6"

STATE OF CALIFORNIA
DEPARTMENT OF TRANSPORTATION

ELECTRICAL SYSTEMS (SIGNAL AND LIGHTING STANDARD, TYPE TS, AND PUSH BUTTON ASSEMBLY POST)

NO SCALE

RSP ES-7A DATED JULY 15, 2016 SUPERSEDES RSP ES-7A
DATED OCTOBER 30, 2015 AND RSP ES-7A DATED JULY 19, 2013 AND
STANDARD PLAN ES-7A DATED MAY 20, 2011 - PAGE 462 OF THE STANDARD PLANS BOOK DATED 2010.

REVISED STANDARD PLAN RSP ES-7A

6-20-16

Dist	COUNTY	ROUTE	POST MILES TOTAL PROJECT	SHEET No.	TOTAL SHEETS
04	CC/Mrn	580	5.0/7.8, 0.0/3.3	486	579

REGISTERED CIVIL ENGINEER

July 15, 2016
PLANS APPROVAL DATE

REGISTERED PROFESSIONAL ENGINEER Stanley P. Johnson No. C57793 Exp. 3-31-18 CIVIL STATE OF CALIFORNIA

THE STATE OF CALIFORNIA OR ITS OFFICERS OR AGENTS SHALL NOT BE RESPONSIBLE FOR THE ACCURACY OR COMPLETENESS OF SCANNED COPIES OF THIS PLAN SHEET.

TO ACCOMPANY PLANS DATED _____

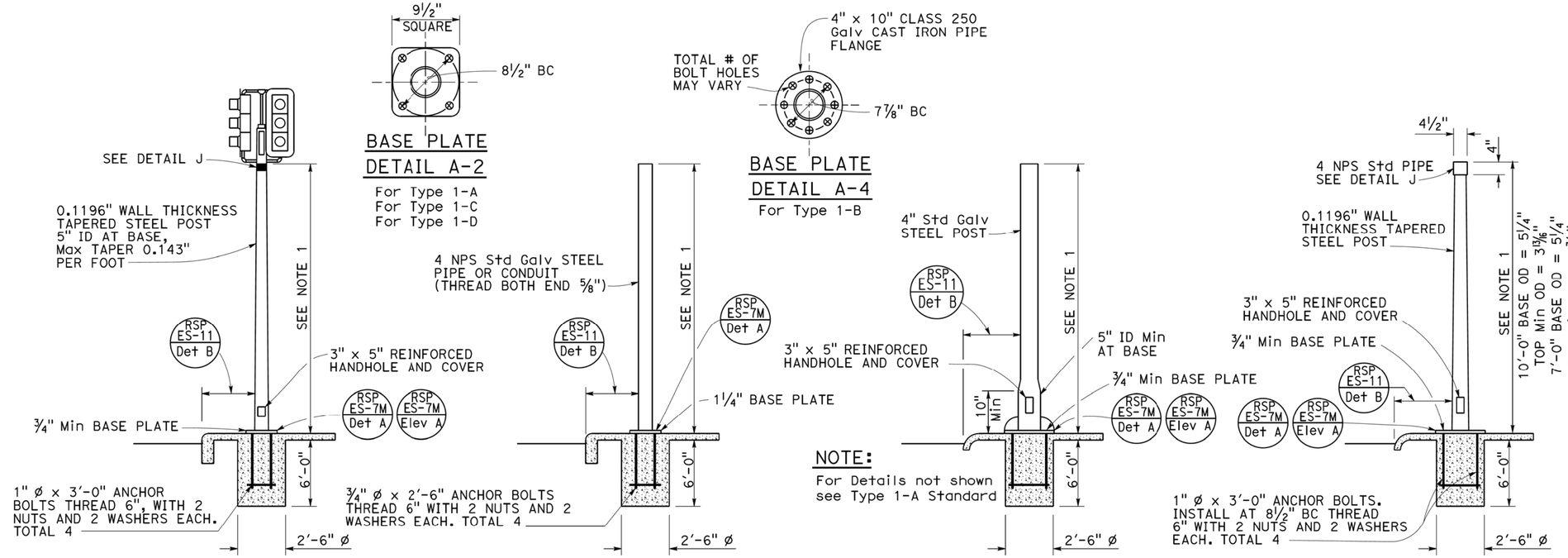

TYPE 1 SIGNAL STANDARDS

DETAIL A

NOTES:

1. Standards shall be 10'-0" ± 2" for vehicle signals and 7'-0" ± 2" for pedestrian signals unless shorter pole is noted on project plans.
2. Top of standards shall be 4½" OD.
3. Conduits shall extend 2" maximum above finished surface of foundation and for Types 1-A, 1-C and 1-D shall be sloped toward handhole.
4. Anchor bolts shall be bonded to conduit or grounding conductor.
5. For additional notes and details, see Revised Standard Plans RSP ES-7M and RSP ES-7N.
6. Pour foundation concrete against undisturbed soil.
7. For standards with handhole, locate in the downstream side of traffic.
8. Coupling nuts to be used only when shown or specified on project plans.

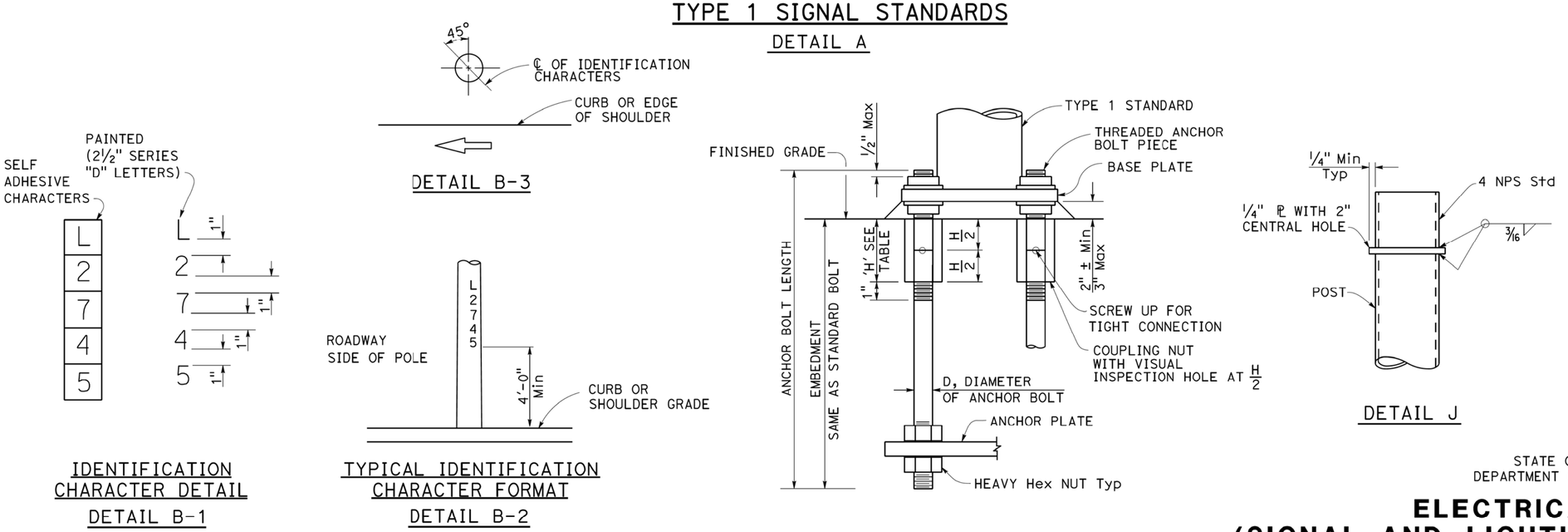

LOCATION OF EQUIPMENT IDENTIFICATION CHARACTERS ON STANDARDS AND POSTS

DETAIL B

COUPLING NUT TABLE	
BOLT DIAMETER	NUT TABLE THICKNESS 'H'
¾"	2¼"
1"	3'

STATE OF CALIFORNIA
DEPARTMENT OF TRANSPORTATION

ELECTRICAL SYSTEMS (SIGNAL AND LIGHTING STANDARD, TYPE 1 AND EQUIPMENT IDENTIFICATION CHARACTERS)

NO SCALE

RSP ES-7B DATED JULY 15, 2016 SUPERSEDES RSP ES-7B DATED OCTOBER 30, 2015 AND STANDARD PLAN ES-7B DATED MAY 20, 2011 - PAGE 463 OF THE STANDARD PLANS BOOK DATED 2010.

REVISED STANDARD PLAN RSP ES-7B

2010 REVISED STANDARD PLAN RSP ES-7B

6-20-16