DocuSign Envelope ID: 330DEBD6-9A9E-4F34-BDCC-1AC1BAA701E9

04 - Ala - 80 - 2.0 - 2.0 **BATA-012**
Caltrans Contract No. 04-01413
Project ID 04-15000182

INVITATION FOR BIDS

FINAL BID SET

Contract Documents
NOTICE TO CONTRACTORS AND SPECIAL PROVISIONS

BRIDGE YARD (IERBYS) SEISMIC AND RENOVATION PROJECT
AT 210 BURMA ROAD, OAKLAND, CA 94607

Issued for Bid: August 28, 2015

For use in Connection with Standard Specifications **Dated 2010**, Standard Plans **Dated 2010** of the California Department of Transportation

BAY AREA TOLL AUTHORITY
Joseph P. Bort MetroCenter
101 Eighth Street
Oakland, California 94607-4700

DocuSign Envelope ID: 330DEBD6-9A9E-4F34-BDCC-1AC1BAA701E9

PROJECT ID 04-15000182

The Special provisions contained herein have been prepared by or under the direction of the following Registered Persons

DIVISION XI: SECTION 99, BUILDING CONSTRUCTION EXCEPT SEISMIC RETROFIT SECTIONS

ARCHITECTURAL

LICENSED ARCHITECT
GREGORY P. BAKER
C-16884
10/31/15
RENEWAL DATE
STATE OF CALIFORNIA

REGISTERED ARCHITECT

ELECTRICAL

REGISTERED PROFESSIONAL ENGINEER
ANDREW HARRINGTON
No. E19367
ELECTRICAL
STATE OF CALIFORNIA

Andrew Harrington
REGISTERED ELECTRICAL ENGINEER

MECHANICAL

REGISTERED PROFESSIONAL ENGINEER
JAMES R. GRONEK
No. M 34898
MECHANICAL
STATE OF CALIFORNIA

James R. Gronek
REGISTERED MECHANICAL ENGINEER

CIVIL

REGISTERED PROFESSIONAL ENGINEER
DANIEL PARKER-KING
Exp. 12/31/2015
CIVIL
STATE OF CALIFORNIA

Daniel Parker-King
REGISTERED CIVIL ENGINEER

STRUCTURAL

REGISTERED PROFESSIONAL ENGINEER
RENE P VIGNOS
No. S4462
Exp. 12/31/16
STRUCTURAL
STATE OF CALIFORNIA

Rene Vignos
REGISTERED STRUCTURAL ENGINEER

DocuSign Envelope ID: 330DEBD6-9A9E-4F34-BDCC-1AC1BAA701E9

PROJECT ID 04-15000182

The Special provisions contained herein have been prepared by or under the direction of the following Registered Persons

DIVISION XI: SECTION 99, SEISMIC RETROFIT SECTIONS ONLY

STRUCTURAL

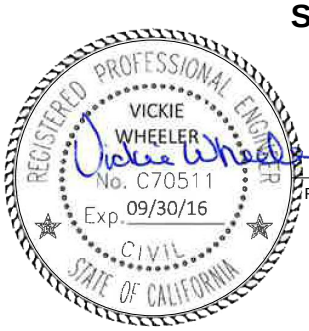

Vickie Wheeler
REGISTERED CIVIL ENGINEER

DocuSign Envelope ID: 330DEBD6-9A9E-4F34-BDCC-1AC1BAA701E9

BAY AREA TOLL AUTHORITY
BRIDGE YARD (IERBYS) SEISMIC AND RENOVATION PROJECT
Contract No. BATA-012

TABLE OF CONTENTS

SPECIAL PROVISIONS

PART 1. INVITATION FOR BID 1
PART 2. FORWARD 6
1. BAY AREA TOLL AUTHORITY 7
2. General Description of Work 7
3. Description of the Contracting Process 7
4. Notice of Award 7
5. Certificates of Insurance 8
6. Forfeiture of Bid Security 8
7. Return of Bid Security 8
8. Executed Contract 8
9. Notice to Proceed 9
PART 3. INSTRUCTIONS TO BIDDERS 10
1. Scope of Work 11
2. Pre-Bid Conference 11
3. Examination of the Contract Documents 11
4. Examination of Site and Existing Conditions 14
5. Addenda to Contract Documents 15
6. Prevailing Wage Rates 15
7. Preparation and Submittal of Bid 15
8. Bid Security 16
9. Opening of Bids 17
10. Withdrawal of Bid 17
11. Conditional Bids 17
12. Single Bid Response 17
13. Award or Rejection of Bids 17
14. Basis of Award 18
15. Protest Procedures 18
16. Public Records 19
PART 4. CONTRACT FORMS 20
Construction Agreement 22
Performance Bond for Public Works 25
Payment Bond for Public Works 27
Alternate to Form W-9 30
PART 5. BID FORMS 32
Bid Form 34
Bidder's Bond 38
Designation Of Subcontractors 40
Affidavit Of Non-Collusion 41
Iran Contracting Act 42
Contractors Reference Form 43
Insurance Certificate Checklist 46
PART 6. SPECIAL CONDITIONS 50
SC-1 Indemnification 51
SC-2 Insurance 51
SC-3 Contract Bonds 54

DocuSign Envelope ID: 330DEBD6-9A9E-4F34-BDCC-1AC1BAA701E9

SC-4 Time for Performance....55
SC-5 Beginning of Work, Time of Completion, and Liquidated Damages....55
SC-6 Contract Data Requirements....56
SC-7 Permits and Fees....59
SC-8 Reserved....59
SC-9 Delivery, Unloading and Storage....59
SC-10 Work Sequence & Constraints....59
SC-11 Mobilization....59
SC-12 Reserved....60
SC-13 Worker's Safety Provisions....60
SC-14 Hazardous Materials....61
SC-15 Construction Water Conservation....61
SC-16 Reserved....62
SC-17 Reserved....62
SC-18 Reserved....62
SC-19 Final Pay Quantities....62
SC-20 Schedule of Values....62
SC-21 Increase or Decreased Quantities, and Quantity Variation....62
SC-22 Project Close-Out Requirements - Record Drawings....62
SC-23 Progress Schedule....62
SC-24 Reserved....70
SC-25 Reserved....70
SC-26 Reserved....70
SC-27 Reserved....70
SC-28 Reserved....70
SC-29 Bridge Tolls....70
SC-30 Value Engineering Change Proposals (VECP)....70
SC-31 Alternative Methods of Construction....71
SC-32 Reserved....71
SC-33 Quality Control Program....71
SC-34 Conformity With Contract Documents and Allowable Deviations....72
SC-35 Use of Materials Found On the Work....72
SC-36 Reserved....72
SC-37 Reserved....72
SC-38 Bird Protection....72
SC-39 Final Inspection and Acceptance....72
SC-40 Dust Control....73
SC-41 Reserved....73
SC-42 Public Convenience and Safety....73
SC-43 Flagging....74
SC-44 Clearing and Grubbing....74
SC-45 Reserved....74
SC-46 Preservation of Property....74
SC-47 Utilities....75
SC-48 Sanitary Facilities....75
SC-49 Reserved....75
SC-50 Contract Data Requirements List....75
SC-51 Technical Submittals List....76

DocuSign Envelope ID: 330DEBD6-9A9E-4F34-BDCC-1AC1BAA701E9

PART 7. GENERAL CONDITIONS 79
GC-1 Applicable Law and Jurisdiction 80
GC-2 Compliance with Laws and Regulations 80
GC-3 Contractors' Licensing Requirements 80
GC-4 Independent Contractor 80
GC-5 Permits, Licenses, Fees and Notices 80
GC-6 Nondiscrimination 81
GC-7 Prohibited Interests 81
GC-8 Labor Provisions 82
GC-9 Hazardous Materials or Unusual Conditions 83
GC-10 Organization Conflicts of Interest 83
GC-11 Reserved 84
GC-12 Archaeological/Historical Discoveries 84
GC-13 Reserved 85
GC-14 Patent Rights 85
GC-15 Intellectual Property, Copyright and Patent Infringement 85
GC-16 Rights in Technical Data 85
GC-17 Ownership of Work and Material 86
GC-18 Title and Risk of Loss 86
GC-19 Assignment and Delegation 86
GC-20 Subcontracts 86
GC-21 Waiver and Non-waiver 87
GC-22 Antitrust Claims 87
GC-23 Stop Notices 87
GC-24 Authorized Representatives 87
GC-25 Notices and Communications 88
GC-26 Pre-Construction Meeting 89
GC-27 Project Meetings 90
GC-28 Publicity Releases 90
GC-29 Notice to Proceed 90
GC-30 Time of Completion 90
GC-31 Progress Schedule 90
GC-32 Excusable Delays and Extensions of Time 90
GC-33 Failure to Complete the Work on Time 91
GC-34 Reserved 91
GC-35 Temporary Construction Facilities and Utilities 91
GC-36 Character of Workmen 91
GC-37 Working Environment 91
GC-38 Public Convenience and Safety 92
GC-39 Cooperation/Coordination and Work by Others 92
GC-40 Security 92
GC-41 Product Options, Supplier Approval and Substitutions 92
GC-42 Source of Materials 93
GC-43 Submittal of Shop Drawings, Product Data and Samples 93
GC-44 Reserved 94
GC-45 Protection and Restoration of Property 94
GC-46 Utility Paint Markings 95
GC-47 Reserved 95

DocuSign Envelope ID: 330DEBD6-9A9E-4F34-BDCC-1AC1BAA701E9

GC-48 Inspection 95
GC-49 Cooperation 95
GC-50 Removal of Rejected or Unauthorized Work 96
GC-51 Disposal of Materials 96
GC-52 Protection of Completed Portions of Work 96
GC-53 Cleanup 96
GC-54 Redlined Construction Drawings 96
GC-55 Final Inspection and Acceptance of All or a Portion of the Work 96
GC-56 Compensation 97
GC-57 Increased or Decreased Quantities and Quantity Variation 98
GC-58 Certified Payrolls 98
GC-59 Invoicing and Progress Payments 98
GC-60 Force Account Payment 103
GC-61 Prompt Payment 103
GC-62 Final Payment 104
GC-63 Project Records 104
GC-64 Reserved 105
GC-65 Change Requests and Change Notices 105
GC-66 Change Orders 106
GC-67 Differing Site Conditions 106
GC-68 Claims 107
GC-69 Suspension of the Work 110
GC-70 Termination for Convenience or in the Public Interest 110
GC-71 Termination for Default 111
GC-72 Contractor's Duties upon Termination 111
GC-73 Warranty 112
GC-74 Warranty Work 112
GC-75 Warranty on Replaced Parts 112
GC-76 Systematic Failures 112
GC-77 Iran Contracting Act of 2010 113
PART 8. (BLANK) 114
PART 9. (BLANK) 114
2010 EDITION OF THE STANDARD PLANS LIST 115
APPENDIX A - CONTRACT DRAWINGS / PLANS 116
APPENDIX B – 2010 REVISED STANDARD SPECIFICATIONS 117
APPENDIX C - WAGE DETERMINATIONS 118
PART 10. CONSTRUCTION DETAILS 119
DIVISION II HAZARDOUS MATERIALS
Department-Generated Contaminated Soil 01411-1
Asbestos-Related Work 02080-1
Lead-Related Work 02082-1
DIVISION XI BUILDING CONSTRUCTION
99-000110 Table of Contents v

DocuSign Envelope ID: 330DEBD6-9A9E-4F34-BDCC-1AC1BAA701E9

DOCUMENT 99-000110
TABLE OF CONTENTS

FACILITY CONSTRUCTION SUBGROUP
DIVISION 02 - EXISTING CONDITIONS

99-024100 Site Demolition
99-024119 Selective Demolition

DIVISION 02 - EXISTING CONDITIONS - SEISMIC RETROFIT

99-020715 Removing Portions of Existing Facilities - Seismic Retrofit

DIVISION 03 - CONCRETE

99-030515 Portland Cement Concrete
99-031100 Concrete Forming
99-031500 Concrete Accessories
99-032520 Anchors and Dowels in Resin
99-032530 Expansion Anchors
99-033000 Cast-In-Place Concrete
99-033001 Cast-In-Place Concrete
99-033500 Concrete Sealers
99-033501 Concrete Finishing
99-033524 Polished Concrete
99-035400 Cast Underlayment

DIVISION 03 - CONCRETE - SEISMIC RETROFIT

99-033005 Cast in Place Concrete - Seismic Retrofit
99-036035 Drill and Bond Dowels - Seismic Retrofit

DIVISION 04 – MASONRY

99-042200 Concrete Masonry Unit

DIVISION 05 - METALS

99-051200 Structural Steel
99-055000 Metal Fabrications
99-057000 Decorative Metal
99-057300 Stainless Steel Railings
99-057701 Decorative Metal Linear Grilles

DIVISION 05 - METALS - SEISMIC RETROFIT

99-051205 Structural Steel - Seismic Retrofit

DIVISION 06 – WOOD, PLASTICS, AND COMPOSITES

99-061000 Rough Carpentry
99-062000 Finish Carpentry

DIVISION 07 - THERMAL AND MOISTURE PROTECTION

99-070152 Roof Modifications

DocuSign Envelope ID: 330DEBD6-9A9E-4F34-BDCC-1AC1BAA701E9

99-072100 Thermal Insulation
99-074213 Metal Wall Panels
99-076000 Flashing and Sheet Metal
99-079200 Joint Sealants

DIVISION 08 - OPENINGS

99-080114 Wood Door Restoration
99-081100 Metal Doors and Frames
99-081412 Custom Wood Doors
99-083100 Access Doors and Panels
99-084126 All-Glass Entrance Doors
99-084413 Glazed Aluminum Curtain Walls
99-087100 Door Hardware
99-087500 Window Hardware
99-088000 Glazing

DIVISION 09 - FINISHES

99-092900 Gypsum Board
99-099000 Painting and Coating
99-099600 High-Performance Coatings
99-099601 Fiber Encapsulating Coating

DIVISION 09 - FINISHES - SEISMIC RETROFIT

99-099005 Painting - Seismic Retrofit

DIVISION 10 - SPECIALTIES

99-101425 Code Signage
99-101453 Traffic Signage
99-104400 Fire Protection Specialties

DIVISION 11 - EQUIPMENT

NOT USED

DIVISION 12 - FURNISHINGS

NOT USED

DIVISION 13 - SPECIAL CONSTRUCTION

NOT USED

DIVISION 14 - CONVEYING EQUIPMENT

NOT USED

FACILITY SERVICES SUBGROUP
DIVISION 21 – FIRE SUPPRESSION

99-210501 Fire Protection General Provisions
99-210548 Vibration Isolation and Seismic Restraints for Fire Suppression
99-210550 Access Doors in General Construction for Fire Protection

DocuSign Envelope ID: 330DEBD6-9A9E-4F34-BDCC-1AC1BAA701E9

99-210553 Systems Identification for Fire Protection
99-210800 Commissioning of Fire Suppression
99-211319 Fire Protection Systems

DIVISION 22 - PLUMBING

99-220501 Plumbing General Provisions
99-220516 Expansion Compensation for Plumbing
99-220529 Hangers and Supports for Plumbing
99-220548 Vibration Isolation and Seismic Restraints for Plumbing
99-220550 Access Doors in General Construction for Plumbing
99-220553 Systems Identification for Plumbing
99-220700 Insulation for Plumbing
99-220800 Commissioning of Plumbing
99-221100 Domestic Water Systems
99-221110 Plumbing Piping and Accessories
99-221300 Drainage Systems
99-224000 Plumbing Fixtures
99-226313 Natural Gas Systems

DIVISION 23 – HEATING, VENTILATING, AND AIR CONDITIONING (HVAC)

99-230501 HVAC General Provisions
99-230513 Electric Motors for HVAC Equipment
99-230529 Hangers and Supports for HVAC
99-230548 Vibration and Seismic Controls for HVAC
99-230553 Systems Identification for HVAC
99-230593 Testing, Adjusting and Balancing for HVAC
99-233400 HVAC Fans
99-235100 Breechings, Chimneys and Stacks
99-238205 Space Terminal Heating Units

DIVISION 25 – INTEGRATED AUTOMATION

NOT USED

DIVISION 26 - ELECTRICAL

99-260501 Electrical General Provisions
99-260502 Equipment Connections and Coordination
99-260519 600V Wire and Cable
99-260526 Grounding System
99-260533 Raceways and Boxes
99-260926 Programmable Lighting Control System
99-262416 Panelboards
99-262726 Wiring Devices
99-262813 600V Fuses
99-262816 Disconnect Switches and Individual Motor Controllers
99-265000 Luminaires and Accessories
99-265100 Lighting Fixtures, Lamps, and Ballasts

DIVISION 27 - COMMUNICATIONS

99-270528 Telecommunications Raceways and Accessories

DIVISION 28 – ELECTRONIC SAFETY AND SECURITY

DocuSign Envelope ID: 330DEBD6-9A9E-4F34-BDCC-1AC1BAA701E9

99-283000 Fire Management System

SITE AND INFRASTRUCTURE SUBGROUP
DIVISION 31 – EARTHWORK

99-310000 Earthwork
99-311100 Clearing and Grubbing

DIVISION 32 – EXTERIOR IMPROVEMENTS

99-321123 Aggregate Base Course
99-321216 Asphalt Paving
99-321313 Concrete Paving
99-321621 Concrete Curbs, Gutters and Walks
99-321713 Parking Bumpers
99-321723 Pavement Markings
99-321726 Detectable Warning Tactiles
99-323113 Chain Link Fences and Gates

DIVISION 33 – UTILITIES

99-330525 Support and Protection of Utilities
99-330528 Trenching and Backfilling for Utilities
99-330535 Protection, Removal, and Abandonment of Utility Pipes

DocuSign Envelope ID: 330DEBD6-9A9E-4F34-BDCC-1AC1BAA701E9

PART 1. INVITATION FOR BID

DocuSign Envelope ID: 330DEBD6-9A9E-4F34-BDCC-1AC1BAA701E9

BAY AREA TOLL AUTHORITY
BRIDGE YARD (IERBYS) SEISMIC AND RENOVATION PROJECT
Contract No. BATA-012

LETTER OF INVITATION
FOR
BRIDGE YARD (IERBYS) SEISMIC AND RENOVATION PROJECT

Dear Contractor:

The BAY AREA TOLL AUTHORITY (BATA) invites your firm to respond to this Invitation for Bid (IFB) for:

BRIDGE YARD (IERBYS) SEISMIC AND RENOVATION PROJECT

BATA is soliciting bids for the construction of **BRIDGE YARD (IERBYS) SEISMIC AND RENOVATION PROJECT** (see description of project in Part 2-2, General Description of Work).

This letter, together with Contract Documents/Special Provisions, Bid Forms and Project Plans comprise the IFB for this project. Responses to the IFB are to be submitted in accordance with the instructions stated herein.

Bid Submission & Bid Opening

Interested bidders must submit their bids in sealed envelopes no later than **2:00 p.m.** on **09/25/2015**. Bids received after that date and time will not be considered. All bids must be completed and submitted on the enclosed Bid Forms, in Part 5 of this IFB, in order to be considered. Bid opening is open to the public and will be held on the due date and time listed above at BATA offices located at Joseph P. Bort MetroCenter, 101 Eighth Street, Oakland, CA 94607 in the Auditorium.

BATA Point of Contact

A submitted bid is considered a firm offer to provide the services described for a period of one hundred twenty (120) days from the date of bid opening.

Bids and all inquiries relating to this IFB must be submitted to the Contract Specialist at the address shown below. E-mail inquiries may be directed to <atruong@mtc.ca.gov>.

Alice Truong, Contract Specialist
BAY AREA TOLL AUTHORITY
Joseph P. Bort MetroCenter
101 Eighth Street, Auditorium
Oakland, CA 94607-4700
(510) 817-5749

Bid Guaranty

Bids must be accompanied by a bid guaranty in the form of a cashier's check, a certified check, or a bid bond executed by an admitted surety insurer ("A 7" Rating or better), in the amount of 10% of the bid amount, payable to BATA. Such check or bond must be given as a guaranty that you will, within six (6) days of being requested to do so by BATA, enter into a contract and provide the required performance and payment bonds. If a Bidder's bond is furnished, it must conform to the form provided with the bid documents herein.

If the Bidder to whom the work has been awarded refuses or fails to accept the contract and/or provide

DocuSign Envelope ID: 330DEBD6-9A9E-4F34-BDCC-1AC1BAA701E9

the required bonds within the specified time, the check is forfeited to BATA or the principal and surety on the bond will be liable to BATA for the principal amount thereof in accordance with its terms. Bidder guarantees will be held until the contract has been finally executed, after which all Bidders' guarantees except any guarantees which have been forfeited, will be returned to the respective Bidders whose bids they accompany, but in no event will Bidder's securities be held by BATA beyond one hundred twenty (120) days from the time set for receiving bids.

References

You must provide **at least three (3) references** for work performed by you or your subcontractor for work similar to the work described in this IFB. For required information, refer to IFB Part 5, Bid Forms, Bid Form #6, Contractors Reference Form.

Pre-Bid Conference and Walkthrough

A pre-bid conference will be held on **Friday, 09/11/2015, at 1:30 p.m. PST at BATA Offices at 101 Eighth Street, Oakland, CA 94607, Auditorium**. A walkthrough will immediately follow the pre-bid conference on the same day at the Bridge Yard Building at 210 Burma Road, Oakland, CA 94607. Attendance at the pre-bid conference and walkthrough is not mandatory.

Prospective bidders are encouraged to attend the pre-bid conference and walkthrough meeting. The bidder's representative should be a company officer, project superintendent, or project estimator. For a joint venture, one of the parties should participate.

A sign-up sheet will be used to identify all prospective bidders including name and title of the company representative attending the pre-bid conference and walkthrough meeting.

See Part 10, Construction Details, Section 2 for any additional requirements to the bidder.

Specifications and Schedule

The specifications and schedule for this project are described herein. The IFB also contains substantive requirements with which Bidders must fully comply in order to guarantee responsiveness.

The time of completion for all construction work (substantial completion) must not be more than **300 calendar days**, commencing on the **sixth (6th) calendar day** following issuance of the Notice of Award by BATA.

Bid Evaluation

Bids will be initially evaluated for responsiveness and adherence to the IFB. Quality and customer service are of the highest importance. In order to ensure superior service, references will be checked, and bidders may be required to provide additional information verifying their experience.

A contract, if awarded, will be to the responsible bidder submitting the lowest responsive bid, as indicated in the "Total Contract Price" space on the Bid Form #1 Schedule of Quantities and Prices in Part 5.

Performance and Labor & Materials Payment Bonds

Prior to contract award, BATA will require both a Performance and Labor & Materials Payment Bond,

DocuSign Envelope ID: 330DEBD6-9A9E-4F34-BDCC-1AC1BAA701E9

executed by an admitted surety insurer with Best Guide of A7 or better and issued by a surety acceptable to BATA. Each bond will be in a sum not less than 100% of the Total Contract Price, as described in Part 6, SC 3.1 (Payment Bond) and SC 3.2 (Performance Bond), of this IFB.

Bidder Selection Timetable*

Friday, 09/11/2015, 1:30 p.m.	Pre-Bid Conference and Walkthrough
Friday, 09/18/2015, 4:00 p.m.	Deadline for requests for clarification or exception
Friday, 09/25/2015, 2:00 p.m.	Closing date & time for receipt of bids & bid opening
Wednesday, 10/14/15	BATA Oversight Committee consideration of recommendation for award
Tuesday, 10/20/2015 (approx.)	Issuance of Notice of Award

*Award and approval dates are approximates and are subject to change before or after the closing date of the IFB.

Supplemental Information

All information related to this IFB, including Contract Documents, Addenda (if any), Questions and Answers, As-Builts, Caltrans 2010 Standard Specifications, Updates, and other project related information will be posted on BATA's website:

http://procurements.mtc.ca.gov/

Bidders are responsible for checking this website to insure Bidders know what documents are available.

General Conditions

BATA reserves the right to award a contract or to reject all bids.

A signed BATA Construction Agreement mailed or delivered to a particular bidder constitutes a binding contract, which incorporates this IFB and its addenda, if any, and all documents referenced herein, any deviations from the specifications expressly accepted by BATA, and all terms and conditions of the Construction Agreement.

This is a public works project subject to the requirements of the California Labor Code. Bidders and all its subcontractors must be registered with the Department of Industrial Relations pursuant to Labor Code section 1725.5 with limited exceptions from this requirement for bid purposes only under Labor Code section 1771.1(a) in order to be considered or awarded a contract.

This project is subject to compliance monitoring and enforcement by the Department of Industrial Relations.

DocuSign Envelope ID: 330DEBD6-9A9E-4F34-BDCC-1AC1BAA701E9

Authority to Commit BATA

The Executive Director of BATA will recommend the successful bidder to the BATA, which will commit BATA to the expenditure of funds in connection with this IFB.

Thank you for your participation.

Sincerely,

DocuSigned by:
Steve Heminger
021DA2847D43405...
Steve Heminger
Executive Director

DocuSign Envelope ID: 330DEBD6-9A9E-4F34-BDCC-1AC1BAA701E9

PART 2. FORWARD

DocuSign Envelope ID: 330DEBD6-9A9E-4F34-BDCC-1AC1BAA701E9

1. BAY AREA TOLL AUTHORITY

There are seven state-owned toll bridges (Antioch, Benicia-Martinez, Carquinez, Richmond-San Rafael, Dumbarton, San Mateo Hayward and the San Francisco-Oakland Bay Bridge) that are owned and operated by the California Department of Transportation (Caltrans) in the San Francisco Bay Area. State-owned toll bridge operations and capital improvement projects are funded by toll revenues, which are administered by the Bay Area Toll Authority (BATA).

2. General Description of Work

The Bridge Yard Building located at 210 Burma Road, Oakland, CA is a 1 story building with a total of 23,974 SF. It was initially constructed in 1938 to maintain the trains that once traveled over the Bay Bridge. Currently, the building is a warehouse owned and operated by Caltrans San Francisco-Oakland Bay Bridge Maintenance. Through this construction project the building occupancy classification will convert to accommodate mixed primary use groups including Business (B), Assembly (A-3), and Storage (S-1) in accordance with the California Building Code Section 508.3.

The scope of work includes, but is not limited to, seismic renovation of the entire; demolition of existing partitions, electrical, lighting, and HVAC as required; renovation and infrastructure replacement in affected areas; mitigation of the hazardous potential of the existing transite siding and low roof areas; American Disability Act (ADA) and minor improvements in the west side of the building; exterior side improvements to the parking lot area.

3. Description of the Contracting Process

The procedure that will be followed during the period between BATA's determination of the successful Bidder and its issuance of a Notice to Proceed consists of the steps listed and explained below:

1. Issuance of Notice of Award (NOA)
2. Signing of Construction Agreement by successful Bidder
3. Submittals of Performance Bond, Payment Bond and Insurance Certificate(s)
4. Execution of Contract by BATA
5. Issuance of Notice to Proceed

4. Notice of Award

After Bids are opened at the time and place stipulated in **Part 1**, Bids will be reviewed by BATA. The contract will be awarded to the lowest responsive and responsible Bidder subject to the approval of the BATA Oversight Committee. BATA reserves the right to award a contract or to reject any or all bids. No Bidder may withdraw its bid for the period of days stipulated in **Part 3, Instructions to Bidders, Section 10, Withdrawal of Bid**, after the date set for the Bid Opening. The Bid is subject to acceptance by BATA during this period.

Promptly upon BATA's approval of the award of the Contract, BATA will issue a Notice of Award letter to the successful Bidder. Included with the NOA will be two originals of **Construction Agreement** and one original of the following:

DocuSign Envelope ID: 330DEBD6-9A9E-4F34-BDCC-1AC1BAA701E9

1. **Performance Bond** in the amount of 100% of the Total Contract Amount, to guarantee faithful performance of the work under the Contract, including the replacing of or making acceptable, any defective materials or faulty workmanship.

2. **Payment Bond** in the amount of 100% of the total amount of the Contract, to inure to the benefit of persons performing labor or furnishing materials in connection with the work of the proposed contract. This bond must be maintained in full force and effect until all work under the contract is completed and accepted by BATA, and until all claims for materials and labor have been paid.

Within **sixth (6th) calendar days** from the date of NOA, the successful Bidder must return executed copies of these documents. Within this same period, Bidder must furnish Certificates of Insurance as more fully described below.

Both the Performance Bond and the Payment Bond must be issued by a surety company(ies) acceptable to BATA with a Best Guide Rating of A7 or better and authorized to execute such in the State of California.

Should any surety or sureties be deemed unsatisfactory at any time by BATA, notice will be given to you to that effect, and you must forthwith substitute a new surety or sureties satisfactory to BATA, at your expense.

All alterations, time extensions, extra work, additional work or any other changes authorized in the Contract, may be made without notice to, or securing the prior consent of, the surety or sureties on the Performance or Payment Bonds.

5. Certificates of Insurance

You must furnish original certificates, within six (6) calendar days from NOA, showing evidence that the insurance coverages specified in the Special Conditions herein have been obtained and are in force. All certificates must provide that not less than sixty (60) calendar days written notice must be given to BATA and any additional insureds in the event of cancellation, non-renewal or material change in the policy.

6. Forfeiture of Bid Security

Failure of the Bidder to whom the Notice of Award was issued to sign the Construction Agreement and submit all of the documents required within **sixth (6th) calendar days** is just cause for the annulment of the award and forfeiture of Bidder's security.

7. Return of Bid Security

If the Bid is not accepted by BATA within one hundred twenty (120) days after the date set for Bid Opening, or if the Bidder to whom the Contract is awarded executes and delivers to BATA the required documents, then the Bidder’s Bond, cash, or the amount of the certified or cashier's check will be returned to all bidders.

8. Executed Contract

DocuSign Envelope ID: 330DEBD6-9A9E-4F34-BDCC-1AC1BAA701E9

After your delivery of two (2) signed original Construction Agreements and all required submissions as stipulated above, BATA will sign the Construction Agreement. No agreement between BATA and you are in effect until BATA executes the Construction Agreement.

9. Notice to Proceed

BATA will issue a Notice to Proceed (NTP) promptly following execution of the Construction Agreement. Commence performance of work after receipt of the Notice to Proceed, and continuously and diligently prosecute the work to completion on or before the time or times set forth in Part 6, **Special Conditions.** Unless otherwise specified in the Notice to Proceed, the first day charged will be the **sixth (6th) calendar days** following the date of the Notice of Award. Do not enter upon nor occupy State property or commence any materials fabrication prior to receiving the Notice to Proceed. Any work performed or expenses incurred by you prior to your receipt of Notice to Proceed are entirely at your risk.

DocuSign Envelope ID: 330DEBD6-9A9E-4F34-BDCC-1AC1BAA701E9

PART 3. INSTRUCTIONS TO BIDDERS

DocuSign Envelope ID: 330DEBD6-9A9E-4F34-BDCC-1AC1BAA701E9

1. Scope of Work

Seismic renovation of the entire building, including the current Paint Operations area; demolition of existing partitions, electrical, lighting, and HVAC as required; renovation of infrastructure replacement in affected areas; mitigation of the hazardous potential of the existing transite siding and low roof areas; ADA and minor improvements in the west side of the building.

2. Pre-Bid Conference

A pre-bid conference will be held at the time and place set out in Part 1, **Invitation for Bid (IFB)**. The purpose of this meeting is to inform prospective Bidders and potential subcontractors of subcontracting and material supply opportunities and to receive comments and questions regarding the work and the Contract Documents from attendees.

3. Examination of the Contract Documents

Each prospective Bidder must carefully examine the Contract Documents and become thoroughly familiar with the terms and conditions contained therein prior to the Bid Opening date. The bid submitted must include a sum to cover the cost of all items necessary to perform the work as set forth in the Contract Documents. No allowance of any kind will be made to you because of lack of such examination or knowledge. The submittal of a bid is conclusive evidence that you have made such an examination.

3.1 Definitions

"Definitions and Terms," of the Standard Specifications and Contract Documents. Whenever in the Standard Specifications, Standard Plans and these contract documents the following terms are used, unless the context otherwise requires, in addition to the definitions listed in Section 1-1.07 of the Standard Specifications, the intent and meaning is interpreted as follows:

Acceptance: The formal written acceptance by BATA of an entire contract that has been completed in all respects in accordance with the plans and specifications and any modifications thereof previously approved.

BATA: Bay Area Toll Authority.

Bidder: Any individual, firm, partnership, corporation, or combination thereof, submitting a bid for the work contemplated, acting directly or through a duly authorized representative.

Caltrans: California Department of Transportation

Conduit: A pipe or tube in which smaller pipes, tubes or electrical conductors are inserted or are to be inserted.

Contract: The written agreement covering the performance of the work and the furnishing of labor, materials, tools and equipment in the construction of the work. The contract incorporates this IFB, and its addenda, if any, all documents referenced herein, any deviations from the specifications expressed and accepted by BATA, and includes the notice to Contractors, proposal, plans, special conditions, general conditions, applicable Caltrans Standard plans and Specifications including revisions and updates, and contract bonds; also any and all supplemental agreements amending or extending the work contemplated

DocuSign Envelope ID: 330DEBD6-9A9E-4F34-BDCC-1AC1BAA701E9

and which may be required to complete the work in a substantial and acceptable manner. Supplemental Agreements are written agreements covering alterations, amendments or extensions to the contract and include contract change orders.

Contract Documents: Contract Documents comprised of Notice to Contractors, Special Provisions and Contract Plans.

Contractor: The person or persons, firm, partnership, corporation, or combination thereof, private or municipal, who have entered into a contract with the BAY AREA TOLL AUTHORITY.

Department: California Department of Transportation, unless with respect to the Standard Plans and Standard Specifications the context requires that Department mean BAY AREA TOLL AUTHORITY (BATA).

Day: 24 consecutive hours running from midnight to midnight; calendar day

Business Day: Day on the calendar except Saturday, Sunday or legal holidays

Calendar Days: A calendar day is any day including all legal holidays, Saturday and Sunday.

Working Day: Time measure unit as defined by the State of California Department of Transportation Standard Specifications, Section 1.

Departments or Officers: Wherever departments or officers are referred to herein, Department staff are meant for the purpose of these Contract Documents, unless with respect to the Standard Plans and Standard Specifications the context requires that Department means BATA.

Director or Director of Transportation: The Director of Congestion Management and Highway Programs or his/her duly authorized representatives.

Federal Agencies: Whenever, in the specifications, reference is made to any Federal agency or officer, the reference is deemed made to any agency or officer succeeding in accordance with law to the powers, duties, jurisdiction and authority of the agency or officer mentioned.

Final Completion: For definitions of “Final Completion”, refer to **GC-55, Final Inspection and Acceptance of All or a Portion of the Work.**

Frontage Road: A local street or road auxiliary to and located generally on the side of an arterial highway for service to abutting property and adjacent areas and for control of access.

Laboratory: The established Laboratory authorized by the Engineer to test materials and work involved in the contract.

Legal Holidays: Those days designated as State holidays in the Government Code.

Liquidated Damages: The amount prescribed in the contract documents, to be paid to BATA or to be deducted from any payments due or to become due the Contractor for each day's delay in completing the whole or any specified portion of the work beyond the time allowed in the contract documents.

Manual of Traffic Controls: The Caltrans Department of Transportation publication entitled "MANUAL OF TRAFFIC CONTROLS for Construction and Maintenance Work Zones." This manual may be obtained from Caltrans Publications.

DocuSign Envelope ID: 330DEBD6-9A9E-4F34-BDCC-1AC1BAA701E9

MTC: Metropolitan Transportation Commission

Notice of Award (NOA): Written notification issued by BATA awarding the contract.

Notice To Proceed (NTP): Notification to the Contractor to commence construction.

Oversight Engineer: The assigned representative of the California Department of Transportation that is duly authorized to oversee work covered by these specifications. The Oversight Engineer will have authority to stop work at any time there is a risk to public safety or when the work appears to be performed in an unsafe manner.

Owner: BAY AREA TOLL AUTHORITY

Owner Furnished Materials: BAY AREA TOLL AUTHORITY furnished materials.

Processing: Any operation or operations of whatever nature and extent required to produce a specified material.

Resident Engineer: Authorized representative for BATA, also, identified as the Engineer.

Resident Inspector: Resident Engineer or his authorized representative.

Special Provisions: The Special Provisions are specific clauses setting forth conditions or requirements peculiar to the work. References to these can include BATA Special Conditions, General Conditions.

Specifications: The directions, provisions and requirements contained in these Contract documents.

Standard Plans: The Standard Plans of the State of California Department of Transportation.

Standard Specifications: The Standard Specifications and Revisions to the Standard Specifications of the State of California, Department of Transportation.

State: State of California**,** unless with respect to the Standard Plans and Standard Specifications the context requires that Department mean BAY AREA TOLL AUTHORITY (BATA).

State Contract Act: The applicable portions of the Public Contract Code. The provisions of this act and other applicable laws form and constitute a part of the provisions of this contract to the same extent as if set forth herein in full.

Substantial Completion: Beneficial Occupancy of the project and issuance of the Notice of Relief of maintenance, both statements issued from the Resident Engineer.

Work: Resources and activities required for Contract acceptance, including labor, materials, equipment, and the created product.

You, you, or your: See Contractor definition.

DocuSign Envelope ID: 330DEBD6-9A9E-4F34-BDCC-1AC1BAA701E9

3.2 Abbreviations

In addition to the Section 1-1.06, Abbreviations, of the Standard Specifications, each abbreviation signifies the following:

Abbreviation	Term
AAN	American Association of Nurserymen.
APHA	American Public Health Association.
API	American Petroleum Institute.
AREA	American Railway Engineering Association.
ASTM	American Society for Testing and Materials.
NECA	National Electrical Contractors Association.
NESC	National Electrical Safety Code

3.3 Units of Measurement

Some of the symbols for units of measurement used in the specifications and in the Summary of Quantities and Prices are defined as follows, in addition to Section 1-106, Abbreviations, of the Standard Specifications. The symbols for other units of measurement used in the specifications are as defined in American Society for Testing and Materials (ASTM) Designation: E-380, or in the various specifications and test referenced in the specifications

Symbols as used in the Specifications	Symbols as used in the Engineer's Estimate	Definitions
A	—	amperes
g	—	gram
kips	---	1,000 pounds
ksi	—	kips per square inch
h		hour
Ω	—	ohm
pcf	—	pounds per cubic foot
s	—	second
ton		2,000 pounds
W	—	watt
V	—	volt

4. Examination of Site and Existing Conditions

Comply with Section 2-1.30, Job Site and Document Examination, of the Standard Specifications.

DocuSign Envelope ID: 330DEBD6-9A9E-4F34-BDCC-1AC1BAA701E9

Prospective bidders must make arrangements to visit the project sites by contacting the BATA Project Manager.

5. Addenda to Contract Documents

BATA reserves the right to make changes in the Contract Documents as it may deem appropriate up to the time set for opening of bids. Any and all changes in the Contract Documents will be made by written Addendum, which is issued by BATA at http://www.procurements.mtc.ca.gov. All potential bidders are responsible for checking the BATA website for any addenda to the bid document.

If such Addenda require changes in quantities or might affect the prices bid, or both, the date set for opening of bids may be postponed by such number of days as BATA deems sufficient to enable Bidders to revise their bids.

Failure to acknowledge receipt of all Addenda may cause the bid to be considered non-responsive to the Contract Documents. You certify that the Contract Documents and Addenda thereto have been thoroughly read and that there are no misunderstandings as to the meaning, purpose or intent of any provision in the Contract Documents as modified by those Addenda.

6. Prevailing Wage Rates

You and all your subcontractors will comply with applicable sections of the California Labor Code and regulations promulgated thereunder (including without limitation, Sections 1720 et seq. and Title 8 of the California Code of Regulations Sections 16000 et seq.) governing the payment of prevailing wages, as determined by the Director of the California Department of Industrial Relations, in regards to all work performed under this Contract. In particular, your attention is drawn to Labor Code Sections 1771 (payment of prevailing wage rate), 1775 (penalty for non-payment), 1776 (payroll records), and 1777.5 (use of apprentices). Appendix C, Wage Determinations, is attached hereto and incorporated herein by this reference.

You and all your subcontractors, to the extent the work of such subcontractors under this Contract is subject to California Labor Code Section 1720 et seq. will be registered with the Department of Industrial Relations pursuant to Labor Code section 1725.5 and will furnish electronic certified payroll records directly to the Labor Commissioner through the internet portal of the Division of Labor Standards Enforcement. BATA reserves the right to require you and all your subcontractors to furnish electronic certified payroll records directly to BATA in addition to the reporting requirement stated above.

7. Preparation and Submittal of Bid

Prepare your bid in strict accordance with all of the requirements of the Contract Documents and any addenda thereto. In order to receive consideration, all bids must comply with the following instructions:

7.1

Bids must be submitted on the forms provided in these Contract Documents in signed original. Bids submitted in any other form may be considered non-responsive and rejected.

7.2

DocuSign Envelope ID: 330DEBD6-9A9E-4F34-BDCC-1AC1BAA701E9

Blank spaces in each bid form must be properly filled in, and the phraseology thereof must not be changed. Any conditions or limitations made to the items mentioned therein may be cause for rejection. Alterations by erasure or interlineation must be explained or noted in the bid over the signature of the Bidder.

7.3

No telegraphic or FAX bid or telegraphic or FAX modification of a bid will be considered. No bids received after the time fixed for receiving them will be considered. Late bids will be returned to the Bidder unopened.

7.4

All bids must be enclosed in a sealed envelope bearing the Contract Number, the title of the project, the date and hour of the opening, and the name of the Bidder. Bids must be addressed to the Project Manager, BAY AREA TOLL AUTHORITY, and delivered to the BATA Office at Joseph P. Bort MetroCenter, 101 Eighth Street, Oakland, CA 94607-4700 no later than the time scheduled for Bid Opening. It is the sole responsibility of the Bidder to see that its bid is received in a timely manner.

7.5

Bids must include full compensation for furnishing all labor, material, tools, and equipment and doing all the work complete in place in accordance with the requirements of the Contract. Bid prices must include all applicable surcharges and fees such as taxes, insurance and fringe benefits, indirect costs, overhead (field and office), profit, subcontractors' costs, travel, freight charges and other applicable surcharges and fees of any kind.

7.6

The quantities given in the Schedule of Quantities and Prices of the contract bid form for which unit prices are asked to be bid are approximate only, being given as a basis for the comparison of bids, and BATA does not, expressly or by implication, represent that the actual quantities required will correspond therewith, but reserves the right to increase or decrease the quantity of any class or portion of the work, or to omit portions of the work, as BATA may deem necessary or advisable.

7.7

You must show the Contract number and title on your bid and on all correspondence

7.8

Wherever in this Bid an amount is stated in both words and figures, in case of discrepancy between words and figures the words prevail. If all or any portion of the Bid is required to be given in unit prices and totals and a discrepancy exists between any such unit prices and totals so given, the unit prices prevail. If the Bid contains an arithmetic error in the computation of unit price extensions or in the summation of Bid item totals, BATA will correct and revise the Total Contract Bid for Comparison accordingly. BATA will not make any changes on the total shown for "lump sum" items.

8. Bid Security

DocuSign Envelope ID: 330DEBD6-9A9E-4F34-BDCC-1AC1BAA701E9

Each bid must be accompanied by a certified or cashier's check, cash, or a Bidder's bond in the sum of not less than **10%** of the Total Contract Price. Any said checks must be made payable to the order of the BAY AREA TOLL AUTHORITY. In case the successful Bidder fails to file satisfactory bonds or provide the insurance required by the Contract Documents, or refuses to enter into a Contract within the specified time, it forfeits its bid security. If the bid is not accepted by BATA within one hundred twenty (**120) calendar days** after the date set for the opening of bids, or if the Bidder to whom the contract is awarded executes and delivers to BATA the required Contract Forms, then the amount of the cash or the certified or cashier's check will be returned to the Bidder.

9. Opening of Bids

Bids will be opened and publicly read aloud by BATA at the time and place stated in **Part 1, Invitation to Bid.**

10. Withdrawal of Bid

Any Bidder may withdraw its bid, either personally or by a written request by a duly authorized representative, at any time prior to the scheduled time for opening of bids. However, no Bidder may withdraw its bid for a period of **one hundred twenty (120) calendar days** after the Bid Opening. Bidder's attention is directed to the provisions of the Public Contract Code Sections 5100 to 5107 regarding relief of bidders.

11. Conditional Bids

Conditional bids, or those which take exception to the Contract Documents, will be considered non-responsive and will be rejected.

12. Single Bid Response

If only one bid is received in response to the Invitation to Bid, a detailed cost proposal may be required of the single Bidder. A cost/price analysis and evaluation and/or audit will be performed of the cost proposal in order to determine if the price is fair and reasonable.

13. Award or Rejection of Bids

The award of the contract to the successful Bidder will be made within one hundred twenty **(120) calendar days** after the opening of bids. If the first Bidder selected as a successful Bidder refuses or fails to execute the contract, BATA may award the contract to the second successful Bidder selected as provided herein and such an award, if made, will be made within one hundred twenty **(120) calendar days** after the opening of the bid proposals. If the second successful Bidder refuses or fails to execute the contract, BATA may award the contract to the third successful Bidder selected as above provided and such an award, if made, will be made within one hundred twenty **(120) calendar days** after opening of the bid proposals. The periods of time specified above within which the award of contract may be made is subjected to an extension for such further period as may be agreed upon in writing between BATA and the Bidder concerned. BATA reserves the right to reject any or all bids and to waive any informality in the bids or in the bid process. Cases of bid unbalancing may be cause for rejection. For purposes of this paragraph, an "unbalanced Bid" is one having nominal prices for some Bid items and inflated prices for other Bid items.

DocuSign Envelope ID: 330DEBD6-9A9E-4F34-BDCC-1AC1BAA701E9

BATA reserves the right to reject any and all bids and not award a Contract to a Bidder that does not meet the requirement of the Department of Industrial Relations pursuant to Labor Code section 1725.5. Refer to **Part 1, Invitation for Bid, General Conditions,** of this IFB.

BATA is in the process of obtaining an Encroachment Permit from Caltrans. If after receipt of the bids for the project, an Encroachment Permit has not been obtained, BATA reserves the right to reject all bids and re-advertise the project or extend the award period as agreed in writing between BATA and the Bidder.

14. Basis of Award

The criteria for determining the successful Bidder will include the Bidder's responsiveness to the requirements of the Contract Documents, Bidder's responsibility and price. Any Bidder may be required to furnish evidence satisfactory to BATA that it and its proposed subcontractors have sufficient means and experience in the type of work called for in the Contract Documents to assure completion of the Contract in a satisfactory manner. Award, if made, will be to the lowest responsible and responsive Bidder, based on the Total Contract Price.

15. Protest Procedures

The following procedures must be used by Bidders seeking review of the Contract Documents or the Contract process:

15.1 General

Bidder protests must be addressed to the BAY AREA TOLL AUTHORITY, Attention: Alice Truong, Contract Specialist and clearly marked "Bid Protest" on the outside of the envelope.

15.2 Protest of Specifications

Prospective bidders may submit written protest of items in the Contract Documents on the grounds that the specifications are biased, unduly restrictive, discourage competition, or do not comply with state or local law or regulation no later than seven (7) calendar days prior to the date bids are due. Such protests will be reviewed by BATA and responded to prior to bid opening. If appropriate, the time of bid opening will be extended to accommodate any changes in the IFB.

15.3 Selection Disputes

You may protest the selection of a Contractor on the grounds that BATA procedures, or applicable provisions of state or local law, have been violated or inaccurately and/or inappropriately applied by BATA by submitting to the Contract Specialist a written explanation of the basis for protest no later than 4:00 p.m. on the third business day after the date BATA Oversight Committee approves the award or the date the bidder is notified that it was not selected, whichever is later, for objection to Contractor selection.

Protests of recommended awards must clearly and specifically describe the basis for the protest in sufficient detail for the BATA review officer to recommend a resolution to the BATA Executive Director.

The BATA Executive Director will respond to the protest in writing, based on the recommendation of a staff review officer.

DocuSign Envelope ID: 330DEBD6-9A9E-4F34-BDCC-1AC1BAA701E9

Should the protesting proposer wish to appeal the decision of the Executive Director, it may file a written appeal with BATA, no later than 4:00 p.m. on the third business day after receipt of the written response from the Executive Director. BATA Oversight Committee's decision will be the final agency decision.

Authorization to award a contract to a particular Contractor by BATA is deemed conditional until the expiration of the protest period or, if a protest is filed, the issuance of a written response to the protest of the Executive Director or if the decision of the Executive Director is appealed, the issuance of BATA Oversight Committee's decision.

16. Public Records

This IFB and any material submitted by a bidder in response to this IFB are subject to public inspection under the California Public Records Act (Government Code Section 6250 *et seq*.), unless exempt by law.

DocuSign Envelope ID: 330DEBD6-9A9E-4F34-BDCC-1AC1BAA701E9

PART 4. CONTRACT FORMS

DocuSign Envelope ID: 330DEBD6-9A9E-4F34-BDCC-1AC1BAA701E9

1. **Construction Agreement ***
2. **Performance Bond ***
3. **Payment Bond ***
4. **Alternate IRS Form W-9**

*** Form must be acknowledged by a Notary**

Return ALL Contract Forms To:

Alice Truong, Contract Specialist
Bay Area Toll Authority
Joseph P. Bort MetroCenter
101 Eighth Street
Oakland, California 94607-4700
Direct Phone: (510) 817-5749
Main Phone: (510 817-5700
Fax: (510) 817-5848

PLEASE NOTE:

It is not necessary to complete these forms to bid on this project. But the Bidder who is awarded the Contract will be required to execute all Contract Forms.

DocuSign Envelope ID: 330DEBD6-9A9E-4F34-BDCC-1AC1BAA701E9

CONTRACT FORM #1

CONSTRUCTION AGREEMENT

This Agreement is entered into between the BAY AREA TOLL AUTHORITY ("BATA") and _____("Contractor") as of the date set out below.

BATA and Contractor agree as follows:

1. Scope of Work

Contractor must provide all labor, materials, tools, equipment and incidentals necessary to perform the work described as in a satisfactory and workmanlike manner and in accordance with the provisions of the Contract Documents.

2. Compensation

Full compensation for the complete and satisfactory performance of the work under this Agreement, in strict compliance with all of the provisions of the Contract Documents, and for payment of all obligations incurred or applicable to performance of the work, will be the Total Contract Price shown in the Schedule of Quantities and Prices attached hereto as this amount may be adjusted in accordance with other provisions of the Agreement. Payment of this compensation will be made by BATA in accordance with the appropriate payment provisions of the Agreement.

3. Contract Documents – Order of Precedence

The following components of the Contract Documents are incorporated by reference into this Construction Agreement:

Order of Precedence (Highest in order listed first)

Part 1.0 through 4.0	Contract Forms and Agreement
Part 5.0	Bid Forms
Part 6.0	Special Conditions
Part 7.0	General Conditions
Part 10.0	Construction Details
Appendix A	Contract Drawings and Plans
Appendix B – 2010 Caltrans Revised Standard Specifications	Current Version
Appendix C	Wage Determinations
Caltrans Standard Specifications	Dated 2010
Caltrans Revised Standard Plans	Current Version
Caltrans Standard Plans	Dated 2010

These documents are essential parts of the agreement between the parties and are intended to be complementary and to describe and provide for a complete work. In the event of any discrepancy between any drawing and the dimensions written thereon, the dimensions will be taken as correct. Detail drawings prevail over general drawings. In the event of any other conflict among the documents, precedence is given in the order listed above.

DocuSign Envelope ID: 330DEBD6-9A9E-4F34-BDCC-1AC1BAA701E9

4. Quality of Work

Where the plans or specifications describe portions of the work in general terms, but not in complete detail, it is understood that only the best general practice is to prevail and that only materials and workmanship of the first quality are to be provided.

5. Time of Performance

Commence work under the Agreement immediately upon issuance by BATA of a Notice to Proceed and complete all of the work under the Agreement by the dates specified in **Part 6.0, Special Conditions**. The issuance of a Notice to Proceed is contingent upon your submittal of proper insurance certificates.

6. Entire Agreement

This Agreement constitutes the entire agreement between BATA and you respecting the subject matter hereof. All other agreements, understandings and communications between the parties hereto are deemed to be merged into and superseded by the provisions of this Agreement. No modification or change to this Agreement will have any force or effect unless it is in writing and expressly referred to as being a Change Order to this Agreement.

7. Responsible Conduct

Contractor must, at all times, deal in good faith and truthfully with BATA. Contractor must submit documentation to BATA, including reports, claims, requests for change orders, equitable adjustment, contract modifications or requests of any kind seeking increased compensation or decreases of an obligation on this contract only in good faith and upon an honest evaluation of the underlying circumstances and an honest calculation of any amount being sought. A violation of this standard of conduct will subject the Contractor to being deemed “non-responsible” and potentially ineligible for future contracts with BATA.

DocuSign Envelope ID: 330DEBD6-9A9E-4F34-BDCC-1AC1BAA701E9

IN WITNESS WHEREOF two identical counterparts of this instrument, each of which will for all purposes be deemed an original thereof, have been duly executed by BATA and Contractor respectively, on the dates set out below.

BAY AREA TOLL AUTHORITY	**CONTRACTOR**
Steve Heminger, Executive Director	Name, Title
Date	Date
	Contractors License No.
	Class/Expiration Date

DocuSign Envelope ID: 330DEBD6-9A9E-4F34-BDCC-1AC1BAA701E9

CONTRACT FORM #2

PERFORMANCE BOND FOR PUBLIC WORKS

KNOW ALL PEOPLE BY THESE PRESENTS: That

WHEREAS, the BAY AREA TOLL AUTHORITY ("BATA") has awarded to

_____

("Principal") a contract described as:

CONTRACT NO. BATA-012
BRIDGE YARD (IERBYS) SEISMIC AND RENOVATION PROJECT

and all of the Contract Documents attached to or forming a part of said Agreement are hereby referred to and made a part hereof; and

WHEREAS, said Principal is required under the terms of said contract to furnish a bond for the faithful performance of said contract,

NOW THEREFORE, we, the Principal and

_____

as Surety, are held and firmly bound unto the BAY AREA TOLL AUTHORITY (hereinafter called "BATA"), in the penal sum of **$ _____**, lawful money of the United States, for the payment of which sum well and truly to be made, we bind ourselves, our heirs, executors, administrators and successors, jointly and severally, firmly by these presents.

The condition of this obligation is such that if the above-bound Principal, its heirs, executors, administrators, successors or assigns, will in all things stand to and abide by, and well and truly keep and perform the covenants, conditions and agreements in the said contract and any alteration thereof made as therein provided, on their part, to be kept and performed at the time and in the manner therein specified, and in all respects according to their true intent and meaning, and indemnifies and save harmless BATA, its officers, agents, and employees, as therein stipulated, then this obligation becomes null and void; otherwise it will be and remain in full force and effect.

And the said Surety for value received, hereby stipulates and agrees that no change, extension of time, alteration or addition to the terms of the contract or to the work to be performed thereunder will in any way affect its obligations on this bond, and it does hereby waive notice of any change, extension of time, alteration or additions to the terms of the contract.

In the event suit is brought upon this bond by BATA and judgment is recovered, Surety will pay all costs incurred by BATA in such suit, including a reasonable attorney's fee to be fixed by the Court.

DocuSign Envelope ID: 330DEBD6-9A9E-4F34-BDCC-1AC1BAA701E9

BAY AREA TOLL AUTHORITY
BRIDGE YARD (IERBYS) SEISMIC AND RENOVATION PROJECT
Contract No. BATA-012

IN WITNESS WHEREOF this instrument has been duly executed by Principal and Surety on this

_____ day of _____, 2015.

PRINCIPAL:	**SURETY:**
_____	_____
(Company)	(Company)
_____	_____
(Signature)	(Signature)
_____	_____
(Name – Please Print)	(Name – Please print)
_____	_____
(Title)	(Title)

NOTE: Signatures of those executing for Surety must be acknowledged by a Notary.

NOTE TO SURETY COMPANY:
The following form of acknowledgement should be used. If any other form of acknowledgement is used, there must be submitted a certified copy of unrevoked resolution of authority for the attorney-in-fact.

SURETY COMPANY ATTORNEY-IN-FACT

State of California)
County of _____)

On _____, before me, the undersigned, a Notary Public in and for the State, personally appeared
_____, known
to me to be the duly authorized Attorney-in-Fact of the corporate Surety named in the within instrument, known to me to be authorized to execute that instrument on behalf of said corporation, known to me to be the person whose name is subscribed to such instrument as the Attorney-in-Fact of said corporation, and acknowledged to me that he (she) subscribed the name of said corporation thereto as Surety, and his (her) own name as Attorney-in-Fact and that said corporation executed the same.

WITNESS MY HAND AND OFFICIAL SEAL:

(SEAL)

_____
Notary Public for the State of California

Acknowledgement by Attorney-in-Fact must be attached.
Corporate seals of Principal and Surety must be attached.

DocuSign Envelope ID: 330DEBD6-9A9E-4F34-BDCC-1AC1BAA701E9

CONTRACT FORM #3

PAYMENT BOND FOR PUBLIC WORKS

KNOW ALL PEOPLE BY THESE PRESENTS: That

WHEREAS, the BAY AREA TOLL AUTHORITY ("BATA") and

_____

("Principal") have entered into a Construction Agreement for the furnishing of all materials, labor, services and transportation necessary, convenient and proper to the performance of

CONTRACT NO. BATA-012
BRIDGE YARD (IERBYS) SEISMIC AND RENOVATION PROJECT

and all of the Contract Documents attached to or forming a part of said Agreement are hereby referred to and made a part hereof; and

WHEREAS, said Principal is required by Chapter 5 (commencing at Section 3225) and Chapter 7 (commencing at Section 3247), Title 15, Part 4, Division 3 of the California Civil Code to furnish a bond in connection with said contract;

NOW THEREFORE, we, the Principal and

_____

as Surety, are held and firmly bound unto the BAY AREA TOLL AUTHORITY (hereinafter called "BATA") in the penal sum of **$** _____ in lawful money of the United States of America for the payment of which sum well and truly to be made, we bind ourselves, our heirs, executors, administrators, successors and assigns, jointly and severally, firmly by these presents.

THE CONDITION OF THIS OBLIGATION IS SUCH that if said Principal or its subcontractors, heirs, executors, administrators, successors, or assigns, fails to pay any of the persons named in Section 3181 of the California Civil Code, amounts due under the Unemployment Insurance Code with respect to work or labor performed by any such claimant, or for any amounts required to be deducted, withheld and paid over to the Employment Development Department from the wages of employees of the Contractor and Subcontractors pursuant to Section 13020 of the Unemployment Insurance Code with respect to the work and labor, the Surety will pay for the same, in an amount not exceeding the sum hereinabove specified, and also, in case suit is brought upon this bond, a reasonable attorney's fee to be fixed by the court.

This bond must inure to the benefit of any of the persons named in Section 3181 of the California Civil Code, so as to give a right of action to such persons or their assigns in any suit brought upon this bond.

It is further stipulated and agreed that the Surety on this bond will not be exonerated or released from the obligation of this bond by any change, extension of time for performance, addition, alteration or modification in, to, or any contract, plans, or agreement pertaining or relating to any scheme or work of improvement hereinabove described or pertaining to or relating to the furnishing of labor, materials, or equipment therefore, nor by any change or modification of any terms of payment or extension of the time for any payment pertaining or relating to any scheme or work of improvement hereinabove described, nor by any rescission or attempted rescission of the contract, agreement or bond, nor by any conditions precedent or subsequent in the bond attempting to limit the right of recovery of claimants otherwise

DocuSign Envelope ID: 330DEBD6-9A9E-4F34-BDCC-1AC1BAA701E9

entitled to recover under any such contract or agreement or under the bond, nor by any fraud practiced by any person other than the claimant seeking to recover on the bond and that this bond be construed most strongly against the Surety and in favor of all persons for whose benefit such bond is given, and under no circumstances will Surety be released from liability to those for whose benefit such bond has been given, by reason of any breach of contract between BATA and original Contractor or on the part of any oblige named in such bond, but the sole conditions of recovery will be that claimant is a person described in Section 3110 or 3112 of the California Civil Code, and has not been paid the full amount of its claim and that Surety does hereby waive notice of any such change, extension of time, addition, alteration or modification herein mentioned.

IN WITNESS WHEREOF this instrument has been duly executed by Principal and Surety on this

_____ day of _____, 2015.

PRINCIPAL:	**SURETY:**
_____	_____
(Company)	(Company)
_____	_____
(Signature)	(Signature)
_____	_____
(Name – Please Print)	(Name – Please print)
_____	_____
(Title)	(Title)

NOTE TO SURETY COMPANY:
The following form of acknowledgement should be used. If any other form of acknowledgement is used, there must be submitted a certified copy of un-revoked resolution of authority for the attorney-in-fact.

SURETY COMPANY ATTORNEY-IN-FACT

State of California)
County of _____)

On _____, before me, the undersigned, a Notary Public in and for the State, personally appeared_____, known to me to be the duly authorized Attorney-in-Fact of the corporate Surety named in the within instrument, known to me to be authorized to execute that instrument on behalf of said corporation, known to me to be the person whose name is subscribed to such instrument as the Attorney-in-Fact of said corporation, and acknowledged to me that he (she) subscribed the name of said corporation thereto as Surety, and his (her) own name as Attorney-in-Fact and that said corporation executed the same.

DocuSign Envelope ID: 330DEBD6-9A9E-4F34-BDCC-1AC1BAA701E9

WITNESS MY HAND AND OFFICIAL SEAL:

(SEAL)

_____
Notary Public for the State of California

Acknowledgement by Attorney-in-Fact must be attached.
Corporate seals of Principal and Surety must be attached.

DocuSign Envelope ID: 330DEBD6-9A9E-4F34-BDCC-1AC1BAA701E9

ALTERNATE FORM----W9

Contract Form #4

ALTERNATE TO FORM W-9
BAY AREA TOLL AUTHORITY
Payer's Request for Taxpayer
Identification Number and Certification

Name as shown on account *(If joint account, must list and circle the name of the person or entity whose number you enter in part 1 below.)*

Business Name_____

Address_____

City, State, and ZIP code_____

List account number(s) here_____

PART 1 Taxpayer Identification Number --- For All Accounts

Enter your taxpayer Identification number in the appropriate box. For most individuals, this is your social security number.

Social Security Number		Employer Identification Number	
I	I	I	I

or

PART 2 For Payees Exempt From Backup Withholding (See Instructions on IRS form W-9)

PART 3 Certification

Under penalty of perjury, I certify that:

(1) The Number shown on this form is my correct Taxpayer Identification Number (or I am waiting for a number to be issued to me), and

(2) I am not subject to backup withholding either because I have not been notified by the Internal Revenue Service (IRS) that I am subject to backup withholding as a result of a failure to report all interest or dividends, or the IRS has notified me that I am no longer subject to backup withholding.

CERTIFICATION INSTRUCTIONS – You must cross out item (2) above if you have been notified by IRS that you are subject to backup withholding because of underreporting interest or dividends on your tax return. However, if after being notified by IRS that you were subject to backup withholding you received another notification from IRS that you are no longer subject to backup withholding, do not cross out item (2).

Please Sign	Signature →	Date

Please check one box in each section below that best describes your type of organization and the transaction for which we make payment to you.

BAY AREA TOLL AUTHORITY
BRIDGE YARD (IERBYS) SEISMIC AND RENOVATION PROJECT
Contract No. BATA-012

ORGANIZATION:

- ☐ Individual
- ☐ Two or more Indiv. (Joint)
- ☐ Sole Proprietorship
- ☐ Partnership
- ☐ Trust /Estate
- ☐ Corporation
- ☐ Real Estate Agent
- ☐ Tax-Exempt Organization
- ☐ Public Entity
- ☐ Other Organization (Specify)

TRANSACTION:

- ☐ Rents (Space & Machine)
- ☐ Medical & Health Care Service
- ☐ Other Services (Specify)
- ☐ Interest
- ☐ Goods/Merchandise
- ☐ Freight
- ☐ Other Transaction (Specify)

DocuSign Envelope ID: 330DEBD6-9A9E-4F34-BDCC-1AC1BAA701E9

PART 5. BID FORMS

DocuSign Envelope ID: 330DEBD6-9A9E-4F34-BDCC-1AC1BAA701E9

1. **Bid Form, Schedule of Quantities and Prices, Contractor Information**
2. **Bidder's Bond ***
3. **Designation of Subcontractors – Fair Practices Act**
4. **Affidavit of Non-Collusion ****
5. **Certification Regarding Iran Contracting Act of 2010**
6. **Contractors Reference Form**
7. **Insurance Certificate Checklist**

*** Form must be acknowledged by a Notary**
****Form must be subscribed and sworn to before Notary Public or other Officer**

PLEASE NOTE:
These forms are designed to contain essential information concerning the Bidder and the bid, and must be completed such that they can be read. If any of the completed forms are illegible, BATA may, at its option, declare the entire bid unresponsive.

DocuSign Envelope ID: 330DEBD6-9A9E-4F34-BDCC-1AC1BAA701E9

BID FORM #1

BID FORM
CONTRACT NO. BATA-012
BRIDGE YARD (IERBYS) SEISMIC AND RENOVATION PROJECT

FROM: BIDDER'S NAME_____

TO: THE BAY AREA TOLL AUTHORITY,

In compliance with the **Invitation to Bid** for this project, the undersigned Bidder, being thoroughly familiar with the terms and conditions of the Contract Documents, hereby proposes and agrees fully to perform the work within the time stated and in strict accordance with the Contract Documents.

The Bidder hereby acknowledges receipt of the following Addenda to the Contract Documents:

Addendum No. _____ Dated _____
Addendum No. _____ Dated _____
Addendum No. _____ Dated _____
Addendum No. _____ Dated _____
Addendum No. _____ Dated _____
Addendum No. _____ Dated _____

Bidder hereby incorporates by reference all provisions of the Contract Documents that follow this Bid Form.

DocuSign Envelope ID: 330DEBD6-9A9E-4F34-BDCC-1AC1BAA701E9

BAY AREA TOLL AUTHORITY
BRIDGE YARD (IERBYS) SEISMIC AND RENOVATION PROJECT
Contract No. BATA-012

SCHEDULE OF QUANTITIES AND PRICES

The prices quoted below include all applicable taxes, fees, permits, delivery, the cost of Bonds, insurance, and other charges and expenses, direct or indirect, as required.

Item No.	Item Code	Item Description	Unit of Measure	Estimated Quantity	Unit Price	Item Total
1	**99-0001**	Building And Site Work	LS	1		

The Total Contract Price shall be the total of the Bid Item above.

TOTAL CONTRACT PRICE:	In Words	Numbers ($):

DocuSign Envelope ID: 330DEBD6-9A9E-4F34-BDCC-1AC1BAA701E9

SUBMITTED BY:

Full and Correct Name of Bidder:

_____

_____

Business Address:

_____

_____

Phone: _____

Fax: _____

California Contractor's License:

Number: _____

Class: _____

Expires: _____

CONTRACTOR INFORMATION

The names of all persons as principals interested in the foregoing bid are as follows:

(IMPORTANT NOTICE: If Bidder or other interested person is a corporation, give legal name of corporation, and names of the President and Secretary thereof; if a partnership, give name of the firm, also names of all individual partners composing firm; if Bidder or other interested person is an individual, give first and last names in full. If a Bidder is a joint venture, supply the above information for each joint venture partner.)

_____

_____

_____

_____

_____

DocuSign Envelope ID: 330DEBD6-9A9E-4F34-BDCC-1AC1BAA701E9

The person signing this Bid Form for the Bidder certifies that he or she is authorized by the Bidder to do so and that the Bidder is bound contractually by that signature.

Signature _____

Name _____
(Print)

Title _____

Date _____

DocuSign Envelope ID: 330DEBD6-9A9E-4F34-BDCC-1AC1BAA701E9

BID FORM #2

BIDDER'S BOND

KNOW ALL PEOPLE BY THESE PRESENTS: That

WHEREAS the undersigned, _____

as Principal and _____

as Surety, are held and firmly bound unto the BAY AREA TOLL AUTHORITY, a political subdivision of the State of California (hereinafter called "BATA") in the penal sum of **10% of the Total Contract Price** of the Principal above named, submitted by said Principal to BATA for the work described below, for the payment of which sum in lawful money of the United States, well and truly to be made, we bind ourselves, our heirs, executors, administrators and successors, jointly and severally, firmly by these presents.

The condition of this obligation is such that a Bid to BATA for performance of that certain construction described as

CONTRACT NO. BATA-012
BRIDGE YARD (IERBYS) SEISMIC AND RENOVATION PROJECT

has been submitted by Principal to BATA.

NOW THEREFORE, if the aforesaid Principal will not withdraw said bid within **120 calendar days** after said opening, and will within the period specified therefore, or if no period be specified, within **six working days** after the prescribed forms are presented to Principal for signature, enter into a written contract with BATA in the prescribed form in accordance with the Bid as accepted, and file two bonds with BATA; a Performance Bond in the amount of **100%** of the Contract Amount to guarantee faithful performance of the work under the Contract and a Payment Bond in the amount of **100%** of the Contract Amount to guarantee payment for labor and materials, as required by law, or in the event of the withdrawal of said Bid within the period specified or the failure to enter into such contract and give such bonds within the time specified, if the Principal will pay BATA the difference between the amount specified in said Bid and the amount for which BATA may procure the required work, if the latter amount be in excess of the former, together with all costs incurred by BATA in again calling for bids, should that become necessary, then the above obligation will be void and of no effect, otherwise to remain in full force and effect.

Surety, for value received, hereby stipulates and agrees that no change, extension of time, alteration or addition to the terms of the Contract on the call for Bids, or to the work to be performed thereunder, will in any way affect its obligation under this Bond, and it does hereby waive notice of any such change, extension of time, alteration or addition to the terms of said Contract or the call for bids, or to the work, or to the specifications.

In the event suit is brought upon this Bond by BATA and judgment is recovered, the Surety will pay all costs incurred by BATA in such suit, including a reasonable attorney's fee to be fixed by the court in accordance with applicable statutory law.

DocuSign Envelope ID: 330DEBD6-9A9E-4F34-BDCC-1AC1BAA701E9

IN WITNESS WHEREOF, we have hereunto set our hands and seals on this _____ day of _____, 2015.

PRINCIPAL:	**SURETY:**
_____	_____
(Company)	(Company)
_____	_____
(Signature)	(Signature)
_____	_____
(Name – Please Print)	(Name – Please print)
_____	_____
(Title)	(Title)

NOTE: Signatures of those executing for Surety must be acknowledged by a Notary.

NOTE TO SURETY COMPANY:
The following form of acknowledgement should be used. If any other form of acknowledgement is used, there must be submitted a certified copy of unrevoked resolution of authority for the attorney-in-fact.

SURETY COMPANY ATTORNEY-IN-FACT

State of California)
County of _____)

On _____, before me, the undersigned, a Notary Public in and for the State, personally appeared_____, known to me to be the duly authorized Attorney-in-Fact of the corporate Surety named in the within instrument, known to me to be authorized to execute that instrument on behalf of said corporation, known to me to be the person whose name is subscribed to such instrument as the Attorney-in-Fact of said corporation, and acknowledged to me that he (she) subscribed the name of said corporation thereto as Surety, and his (her) own name as Attorney-in-Fact and that said corporation executed the same.

WITNESS MY HAND AND OFFICIAL SEAL:

(SEAL)

_____
Notary Public for the State of California

Acknowledgement by Attorney-in-Fact must be attached.
Corporate seals of Principal and Surety must be attached.

DocuSign Envelope ID: 330DEBD6-9A9E-4F34-BDCC-1AC1BAA701E9

BAY AREA TOLL AUTHORITY
BRIDGE YARD (IERBYS) SEISMIC AND RENOVATION PROJECT
Contract No. BATA-012

BID FORM #3

DESIGNATION OF SUBCONTRACTORS IN COMPLIANCE WITH THE SUBLETTING AND SUBCONTRACTING FAIR PRACTICES ACT

Bidder:_____

Bidder must completely fill in the form below for each proposed subcontract in excess of one-half percent of Bidder's Total Contract Price or, in bids for the construction of streets or highways, including bridges, in excess of one-half of one percent of the Bidder's Total Contract Price or $10,000, whichever is greater, in compliance with the Public Contract Code of the State of California, Sections 4100-4114.

Name of Subcontractor	Subcontractor License Number	City/State	Portion of Work/Bid Item

Total Contract Amount:$ _____ Amount to be subcontracted: $_____

Percentage to be Subcontracted: _____%

DocuSign Envelope ID: 330DEBD6-9A9E-4F34-BDCC-1AC1BAA701E9

BID FORM #4

AFFIDAVIT OF NON-COLLUSION
TO BE EXECUTED BY BIDDER AND SUBMITTED WITH BID
CONTRACT NO. BATA-012
BRIDGE YARD (IERBYS) SEISMIC AND RENOVATION PROJECT

State of California)
)
County of).

_____
(Name)
being first duly sworn, deposes and says he or she is

_____ of _____
(Position / Title) (Company)

the party making the foregoing bid and that the bid is not made in the interest of, or on behalf of, any undisclosed person, partnership, company, association, organization, or corporation; that the bid is genuine and not collusive or sham; that the Bidder has not directly or indirectly induced or solicited any other Bidder to put in a false or sham bid; and has not directly or indirectly colluded, conspired, connived, or agreed with any Bidder or anyone else to put in a sham bid, or that anyone will refrain from bidding; that the Bidder has not in any manner directly or indirectly, sought by agreement, communication, or conference with anyone to fix the bid price of the Bidder or any other Bidder, or to fix any overhead, profit, or cost element of the bid price, or of that of any other Bidder, or to secure any advantage against the public body awarding the contract of anyone interested in the proposed contract; that all statements contained in the bid are true; and, further, that the Bidder has not, directly or indirectly, submitted his or her bid price or any breakdown thereof, or the contents thereof, or divulged information or data relative thereto, or paid, and will not pay, any fee to any corporation, partnership, company association, organization, bid depository, or to any member or agent thereof to effectuate a collusive or sham bid.

_____
Signature of Affiant

Subscribed and sworn to before me on this _____day of _____, 2015.

at _____, _____.
(City) (State)

_____
Signature of Notary Public or Officer Taking Oath

Seal of Notary Public or
Officer Taking Oath

DocuSign Envelope ID: 330DEBD6-9A9E-4F34-BDCC-1AC1BAA701E9

BID FORM #5

IRAN CONTRACTING ACT

(Public Contract Code sections 2200-2208)

Prior to bidding on, submitting a proposal or executing a contract or renewal for a BATA contract for goods or services of $1,000,000 or more, a Proposer must either: a) certify it is not on the current list of persons engaged in investment activities in Iran created by the California Department of General Services ("DGS") pursuant to Public Contract Code section 2203(b) and is not a financial institution extending twenty million dollars ($20,000,000) or more in credit to another person, for 45 days or more, if that other person will use the credit to provide goods or services in the energy sector in Iran and is identified on the current list of persons engaged in investment activities in Iran created by DGS; or b) demonstrate it has been exempted from the certification requirement for that solicitation or contract pursuant to Public Contract Code section 2203(c) or (d).

To comply with this requirement, please insert your Proposer or financial institution name and Federal ID Number (if available) and complete one of the options below. Please note: California law establishes penalties for providing false certifications, including civil penalties equal to the greater of $250,000 or twice the amount of the contract for which the false certification was made; contract termination; and three-year ineligibility to bid on contracts. (Public Contract Code section 2205.)

OPTION #1 - CERTIFICATION

I, the official named below, certify I am duly authorized to execute this certification on behalf of the vendor/financial institution identified below, and the vendor/financial institution identified below is not on the current list of persons engaged in investment activities in Iran created by DGS and is not a financial institution extending twenty million dollars ($20,000,000) or more in credit to another person/vendor, for 45 days or more, if that other person/vendor will use the credit to provide goods or services in the energy sector in Iran and is identified on the current list of persons engaged in investment activities in Iran created by DGS.

Proposer Name/Financial Institution (Printed)	*Federal ID Number (or n/a)*
By (Authorized Signature)	
Printed Name and Title of Person Signing	
Date Executed	*Executed in*

OPTION #2 – EXEMPTION

Pursuant to Public Contract Code sections 2203(c) and (d), a public entity may permit a Proposer/financial institution engaged in investment activities in Iran, on a case-by-case basis, to be eligible for, or to bid on, submit a proposal for, or enters into or renews, a contract for goods and services.

If you have obtained an exemption from the certification requirement under the Iran Contracting Act, please fill out the information below, and attach documentation demonstrating the exemption approval.

Proposer Name/Financial Institution (Printed)	*Federal ID Number (or N/A)*
By (Authorized Signature)	
Printed Name and Title of Person Signing	*Date Executed*

DocuSign Envelope ID: 330DEBD6-9A9E-4F34-BDCC-1AC1BAA701E9

BID FORM #6

CONTRACTORS REFERENCE FORM

Name of Contractor

Representative Name & Title

Phone Number

References must not be relatives of the contractor's representative or owners. The references given must be for commercial clients with contracts in excess of $100,000 each and similar in nature to the Specifications as outlined in this IFB.

1. Client's Name

Contact Person

Address

City & Zip Code

Phone Number & Email

Description of Work
Performed/Contract
Amount/Start-Finish Dates

Bidders Role/Key Personnel

DocuSign Envelope ID: 330DEBD6-9A9E-4F34-BDCC-1AC1BAA701E9

2. **Client's Name**

Contact Person

Address

City & Zip Code

Phone Number & Email

Description of Work
Performed/Contract
Amount/Start-Finish Dates

Bidders Role/Key Personnel

3. **Client's Name**

Contact Person

Address

City & Zip Code

Phone Number & Email

DocuSign Envelope ID: 330DEBD6-9A9E-4F34-BDCC-1AC1BAA701E9

Description of Work

Performed/Contract

Amount/Start-Finish Dates

Bidders Role/Key Personnel

DocuSign Envelope ID: 330DEBD6-9A9E-4F34-BDCC-1AC1BAA701E9

BID FORM #7

INSURANCE CERTIFICATE CHECKLIST

INSURANCE REQUIREMENTS

Minimum Insurance Coverages. The insurance requirements specified in this section must cover your own liability and the liability arising out of work or services performed under this Agreement by any subconsultants, subcontractors, suppliers, temporary workers, independent contractors, leased employees, or any other persons, firms or corporations that you authorize to work under this Agreement (hereinafter referred to as "Agents.") You must, at your own expense, obtain and maintain in effect at all times during the life of this Agreement the following types of insurance against claims, damages and losses due to injuries to persons or damage to property or other losses that may arise in connection with the performance of work under this Agreement.

You are required to assess the risks associated with work to be performed by Agents under subcontract and to include in every subcontract the requirement that the Agent maintain adequate insurance coverage with appropriate limits and endorsements to cover such risks. To the extent that an Agent does not procure and maintain such insurance coverage, you are responsible for said coverage and assume any and all costs and expenses that may be incurred in securing said coverage or in fulfilling your indemnity obligation as to yourself or any of your Agents in the absence of coverage.

In the event you or your Agents procure excess or umbrella coverage to maintain certain requirements outlined below, these policies must also satisfy all specified endorsements and stipulations, including provisions that your insurance be primary without right of contribution from BATA. Prior to beginning work under this contract, you must provide BATA with satisfactory evidence of compliance with the insurance requirements of this section.

Yes (√)	**Please certify by checking the box below that required coverages will be provided within six (6) calendar days from Notice of Award.**
___	Workers' Compensation Insurance with Statutory limits, and Employer's Liability Insurance with a limit of not less than $1,000,000 per accident, $1,000,000 per employee for disease, and $1,000,000 policy limit for disease, and any and all other coverage of your employees as may be required by applicable law. (Such policy must contain a Waiver of Subrogation in favor of BATA. Such Workers Compensation & Employers Liability may be waived, if and only for as long as you are a sole proprietor or a corporation with stock 100% owned by officers with no employees. Should any bridge work require coverage for the United States Longshore Harbor Workers Act, you agree to furnish proof of insurance, if required.
___	Commercial General Liability Insurance for Bodily Injury and Property Damage liability, covering operations of you and your officers, agents, and employees and with limits of liability which must not be less than $1,000,000 combined single limit per occurrence with a general aggregate liability of not less than $2,000,000, and Personal and Advertising injury liability with a limit of not less than $1,000,000. Such policy must contain a Waiver of Subrogation in favor of BATA. BATA, Caltrans, and their commissioners, directors, officers, representatives, agents and employees are to be named as additional insureds. Such insurance must be primary and contain a Separation of Insureds clause as respects any claims, losses or liability arising directly or indirectly from Bidder's operations. BATA, Caltrans, and their commissioners, directors, officers, representatives, agents and

DocuSign Envelope ID: 330DEBD6-9A9E-4F34-BDCC-1AC1BAA701E9

	employees are to be named as additional insureds. Such insurance must be primary and contain a Separation of Insureds Clause as respects any claims, losses or liability arising directly or indirectly from your operations.
___	Business Automobile Liability Insurance for all automobiles owned (if any), used or maintained by you and your officers, agents and employees, including but not limited to owned (if any), leased (if any), non-owned and hired automobiles. Limits of liability which must not be less than $1,000,000 combined single limit per accident for Bodily Injury and Property Damage.
___	Umbrella insurance in the amount of $4,000,000 providing excess limits over Employers Liability, Automobile Liability and Commercial General Liability insurance. Such umbrella coverage must be following form to underlying coverage including all endorsements and additional insured requirements.
___	Property Insurance covering your own Business Personal Property and Equipment to be used in the performance of this agreement, materials or property to be purchased and/or installed on behalf of BATA (if any), and builders risk for property in the course of construction (if applicable). You are responsible for all loss or damage, howsoever caused, to the work and materials, until final acceptance by BATA. In addition, the insurance should include "in transit" coverage to the final agreed upon destination of delivery, and including loading and unloading operations and such coverage must be in force until the work and materials are accepted by BATA. Coverage must be written on a "Special Form" policy that includes theft, but excludes earthquake, with limits at least equal to the replacement cost of the property. Such policy must contain a Waiver of Subrogation in favor of BATA.
___	Contractors' Pollution Liability Insurance. Contractors' Pollution Liability insurance for bodily injury and property damage coverage with a combined single limit for bodily injury and property damage of at least $1,000,000 per occurrence or claim and a general aggregate limit of at least $1,000,000. This insurance shall include coverage for, but not be limited to sudden and accidental discharges; gradual discharges, clean-up of pollutants and disposal thereof; and, mold, asbestos or lead, if an abatement contract. If you dispose of Hazardous Materials under this Agreement, you will designate the disposal site and provide a certificate of insurance from the disposal facility to BATA. Your Business Automobile Liability coverage shall also be extended to cover pollution liability during loading; unloading and while in transit including, but not limited to, the perils of collision and upset. Coverage may be provided by endorsement to the general liability and automobile policies or by a separate policy. Such policy shall contain a Waiver of Subrogation in favor of BATA. BATA, Caltrans and their commissioners, directors, officers, representatives, agents and employees are to be named as additional insureds. Such insurance shall be primary and contain a Separation of Insureds Clause as respects any claims, losses or liability arising directly or indirectly from your operations.

General Terms and Conditions
All policies will be issued by insurers acceptable to BATA, generally with a Best's Rating of A-VII or better.

DocuSign Envelope ID: 330DEBD6-9A9E-4F34-BDCC-1AC1BAA701E9

Your obligation hereunder may be satisfied in whole or in part by adequately funded self-insurance, upon evidence of financial capacity satisfactory to BATA.

Deductible

You are responsible for payment of any deductible or retention on your policies without right of contribution from BATA. Deductible and retention provisions must not contain any restrictions as to how or by whom the deductible or retention is paid. Any deductible or retention provision limiting payment to the Named Insured is unacceptable.

In the event that BATA seeks coverage as an additional insured under your insurance policy that contains a deductible or self-insured retention, you must satisfy such deductible or self-insured retention to the extent of loss covered by such policy, for any lawsuit arising from or connected with any alleged act by you, subconsultant, subcontractor, or any of your employees, officers or directors, even if you or subconsultant is not a named defendant in the lawsuit.

Claims Made Coverage

If any insurance specified above is provided on a claim-made (rather than an “occurrence’) basis, then in addition to coverage requirements above, such policy must:

1. Ensure that the Retroactive Date is shown on the policy, and such date must be before the date of this Agreement or the beginning of any work under this Agreement;

2. Maintain and provide evidence of similar insurance for at least three (3) years following project completion, including the requirement of adding all additional insureds; and

3. If insurance is cancelled or non-renewed, and not replaced with another claims-made policy form with a Retroactive Date prior to the Agreement effective date, you must purchase “extended reporting” coverage for a minimum of three (3) years after completion of the work.

Failure to Maintain Insurance

All insurance specified above must remain in force until all work or services to be performed are satisfactorily completed, all of your personnel, subcontractors, and equipment have been removed from BATA’s property, and the work or services have been formally accepted. You must notify BATA if any of the above required coverages are non-renewed or cancelled. The failure to procure or maintain required insurance and/or an adequately funded self-insurance program will constitute a material breach of this Agreement.

Prior to commencement of any work hereunder, you must deliver to BATA Certificates of Insurance verifying the aforementioned coverages. Such certificates must make reference to all provisions and endorsements referred to above and must be signed on behalf of the insurer by an authorized representative thereof.

The foregoing requirements as to the types and limits of insurance coverage to be maintained by you are not intended to and must not in any manner limit or qualify the liabilities and obligations otherwise assumed by you pursuant hereto, including, but not limited to, liability assumed pursuant to the Indemnification section of this Agreement.

DocuSign Envelope ID: 330DEBD6-9A9E-4F34-BDCC-1AC1BAA701E9

By signing below you acknowledge and agree to provide the required certificate of insurance providing verification of the minimum insurance requirements listed above within six (6) calendar days from Notice of Award.

Representative Name and Title	
Name of Authorizing Official	
Authorized Signature	
Date	

NOTE: If you were unable to check "Yes" for any of the required minimum insurance coverages listed above, a request for exception to the appropriate insurance requirement(s) must be brought to BATA's attention no later than closing date/time for receipt of requests for modifications/exceptions. If such modifications/exceptions are not brought to BATA's attention consistent with the provisions of this IFB, compliance with the insurance requirements will be assumed.

DocuSign Envelope ID: 330DEBD6-9A9E-4F34-BDCC-1AC1BAA701E9

PART 6. SPECIAL CONDITIONS

DocuSign Envelope ID: 330DEBD6-9A9E-4F34-BDCC-1AC1BAA701E9

SC-1 Indemnification

Consistent with California Civil Code Section 2782 and except where the injury, loss, damage or expense arises from the sole or active negligence or the willful misconduct of BATA or Caltrans, you agree to indemnify and hold BATA, Caltrans and their commissioners, directors, officers, employees and agents harmless from all claims, demands, suits, losses, damages, injury, and liability, direct or indirect (including any and all costs and expenses in connection therewith), incurred by reason of any act or omission by you, your officers, agents, employees and subcontractors or any of them, under or in connection with this contract; and you agree at your own cost expense and risk to defend any and all claims, demands, suits, or other legal proceedings brought or instituted against BATA, Caltrans, or their commissioners, directors, officers, agents, and employees, or any of them arising out of such act or omission, and to pay and satisfy any resulting judgments.

Except as otherwise provided by law, these requirements apply regardless of the existence or degree of fault of the State. Your defense and indemnity obligation must extend to Claims arising after the work is completed and accepted if the Claims are directly related to alleged acts or omissions by you that occurred during the course of the work. Any inspection of the work by the State is not a waiver of full compliance with these requirements.

Except as otherwise provided by law, these requirements apply regardless of the existence or degree of fault of BATA. Your defense and indemnity obligation must extend to Claims arising after the work is completed and accepted if the Claims are directly related to alleged acts or omissions by you that occurred during the course of the work. Any inspection of the work by BATA is not a waiver of full compliance with these requirements.

Your obligation to defend and indemnify is not excused because of your inability to evaluate liability or because you evaluate liability and determine that you are not liable. You must respond within 30 days to the tender of any Claim for defense and indemnity by BATA, unless this time has been extended by BATA. If you fail to accept or reject a tender of defense and indemnity within 30 days, in addition to any other remedy authorized by law, BATA may withhold such funds BATA reasonably considers necessary for its defense and indemnity until disposition has been made of the Claim or until the Contractor accepts or rejects the tender of defense, whichever occurs first.

With respect to third-party claims against you, you waive all rights of any type to express or implied indemnity against BATA, its officers, employees, or agents (excluding agents who are design professionals).

SC-2 Insurance

2.1 Minimum Coverage

The insurance requirements specified in this section must cover your own liability and the liability arising out of work or services performed under this Agreement by any subconsultants, subcontractors, suppliers, temporary workers, independent contractors, leased employees, or any other persons, firms or corporations that you authorize to work under this Agreement (hereinafter referred to as “Agents.”) You must, at your own expense, obtain and maintain in effect at all times during the life of this Agreement the following types of insurance against claims, damages and losses due to injuries to persons or damage to property or other losses that may arise in connection with the performance of work under this Agreement.

DocuSign Envelope ID: 330DEBD6-9A9E-4F34-BDCC-1AC1BAA701E9

You are also required to assess the risks associated with work to be performed by Agents under subcontract and to include in every subcontract the requirement that the Agent maintain adequate insurance coverage with appropriate limits and endorsements to cover such risks. To the extent that an Agent does not procure and maintain such insurance coverage, you are responsible for said coverage and assume any and all costs and expenses that may be incurred in securing said coverage or in fulfilling your indemnity obligation as to yourself or any of your Agents in the absence of coverage.

In the event you or your Agents procure excess or umbrella coverage to maintain certain requirements outlined below, these policies must also satisfy all specified endorsements and stipulations, including provisions that your insurance be primary without right of contribution from BATA. Prior to beginning work under this contract, you must provide BATA with satisfactory evidence of compliance with the insurance requirements of this section.

2.1.1 Workers' Compensation Insurance with Statutory limits, and Employer's Liability Insurance with a limit of not less than $1,000,000 per accident, $1,000,000 per employee for disease, and $1,000,000 policy limit for disease, and any and all other coverage of your employees as may be required by applicable law. (Such policy must contain a Waiver of Subrogation in favor of BATA. Such Workers Compensation & Employers Liability may be waived, if and only for as long as you are a sole proprietor or a corporation with stock 100% owned by officers with no employees. Should any bridge work require coverage for the United States Longshore Harbor Workers Act, you agree to furnish proof of insurance, if required.

2.1.2 Commercial General Liability Insurance for Bodily Injury and Property Damage liability, covering operations of you and your officers, agents, and employees and with limits of liability which must not be less than $1,000,000 combined single limit per occurrence with a general aggregate liability of not less than $2,000,000, and Personal and Advertising injury liability with a limit of not less than $1,000,000. Such policy must contain a Waiver of Subrogation in favor of BATA. BATA, Caltrans, and their commissioners, directors, officers, representatives, agents and employees are to be named as additional insureds. Such insurance must be primary and contain a Separation of Insureds clause as respects any claims, losses or liability arising directly or indirectly from your operations.

2.1.3 Business Automobile Liability Insurance for all automobiles owned (if any), used or maintained by you and your officers, agents and employees, including but not limited to owned (if any), leased (if any), non-owned and hired automobiles. Limits of liability which must not be less than $1,000,000 combined single limit per accident for Bodily Injury and Property Damage.

2.1.4 Umbrella insurance in the amount of $4,000,000 providing excess limits over Employers Liability, Automobile Liability and Commercial General Liability insurance. Such umbrella coverage must be following form to underlying coverage including all endorsements and additional insured requirements.

2.1.5 Property Insurance covering your own Business Personal Property and Equipment to be used in the performance of this agreement, materials or property to be purchased and/or installed on behalf of BATA (if any), and builders risk for property in the course of construction (if applicable). You are responsible for all loss or damage, howsoever caused, to the work and materials, until final acceptance by BATA. In addition, the

DocuSign Envelope ID: 330DEBD6-9A9E-4F34-BDCC-1AC1BAA701E9

insurance should include "in transit" coverage to the final agreed upon destination of delivery, and including loading and unloading operations, and such coverage must be in force until the work and materials are accepted by BATA.

Coverage must be written on a "Special Form" policy that includes theft, but excludes earthquake, with limits at least equal to the replacement cost of the property. Such policy must contain a Waiver of Subrogation in favor of BATA.

2.1.6 Contractors' Pollution Liability insurance for bodily injury and property damage coverage with a combined single limit for bodily injury and property damage of at least $1,000,000 per occurrence or claim and a general aggregate limit of at least $1,000,000. This insurance shall include coverage for, but not be limited to sudden and accidental discharges; gradual discharges, clean-up of pollutants and disposal thereof; and, mold, asbestos or lead, if an abatement contract. If you dispose of Hazardous Materials under this Agreement, you will designate the disposal site and provide a certificate of insurance from the disposal facility to BATA.

Your Business Automobile Liability coverage shall also be extended to cover pollution liability during loading; unloading and while in transit including, but not limited to, the perils of collision and upset. Coverage may be provided by endorsement to the general liability and automobile policies or by a separate policy. Such policy shall contain a Waiver of Subrogation in favor of BATA.

BATA, Caltrans and their commissioners, directors, officers, representatives, agents and employees are to be named as additional insureds. Such insurance shall be primary and contain a Separation of Insureds Clause as respects any claims, losses or liability arising directly or indirectly from your operations.

2.2 Deductibles

You are responsible for payment of any deductible or retention on your policies without right of contribution from BATA. Deductible and retention provisions must not contain any restrictions as to how or by whom the deductible or retention is paid. Any deductible or retention provision limiting payment to the Named Insured is unacceptable.

In the event that BATA seeks coverage as an additional insured under any Bidder insurance policy that contains a deductible or self-insured retention, you must satisfy such deductible or self-insured retention to the extent of loss covered by such policy, for any lawsuit arising from or connected with any alleged act by you, subconsultant, subcontractor, or any of your employees, officers or directors, even if you or subconsultant is not a named defendant in the lawsuit.

2.3 Failure to Maintain Insurance

All insurance specified above must remain in force until all work or services to be performed are satisfactorily completed, all of your personnel, subcontractors, and equipment have been removed from BATA's property, and the work or services have been formally accepted. You must notify BATA if any of the above required coverages are non-renewed or cancelled. The failure to procure or maintain required insurance and/or an adequately funded self-insurance program will constitute a material breach of this Agreement.

DocuSign Envelope ID: 330DEBD6-9A9E-4F34-BDCC-1AC1BAA701E9

2.4 Self-Insurance

Your obligation hereunder may be satisfied in whole or in part by adequately funded self-insurance, upon evidence of financial capacity satisfactory to BATA.

2.5 Claims Made Coverage

If any insurance specified above be provided on a claim-made (rather than an "occurrence') basis, then in addition to coverage requirements above, such policy must:

2.5.1 Ensure that the Retroactive Date is shown on the policy, and such date must be before the date of this Agreement or the beginning of any work under this Agreement;

2.5.2 Maintain and provide evidence of similar insurance for at least three (3) years following project completion, including the requirement of adding all additional insureds; and

2.5.3 If insurance is cancelled or non-renewed, and not replaced with another claims-made policy form with a Retroactive Date prior to the Agreement effective date, you must purchase "extended reporting" coverage for a minimum of three (3) years after completion of the work.

2.6 Certificates of Insurance

Prior to commencement of any work hereunder, you must deliver to BATA Certificates of Insurance verifying the aforementioned coverages. Such certificates must make reference to all provisions and endorsements referred to above and must be signed on behalf of the insurer by an authorized representative thereof.

2.7 Disclaimer

The foregoing requirements as to the types and limits of insurance coverage to be maintained by you are not intended to and must not in any manner limit or qualify the liabilities and obligations otherwise assumed by you pursuant hereto, including, but not limited to, liability assumed pursuant to Section 7-1.05, Indemnification, of the Standard Specifications.

2.8 Acceptable Insurers

All policies will be issued by insurers acceptable to BATA, generally with a Best's Rating of A-VII or better.

SC-3 Contract Bonds

Prior to execution of the Contract, file with BATA consistent with the forms provided herein, two surety bonds in the amounts and for the purposes noted below, duly executed by a reputable surety company satisfactory to BATA; *provided, however,* that no bonds are required on contracts of $25,000 or less. Pay all premiums and costs relating to required bonds, whether direct or incidental thereto. Both you and surety must sign each bond.

3.1 Payment Bond

DocuSign Envelope ID: 330DEBD6-9A9E-4F34-BDCC-1AC1BAA701E9

The Payment Bond must be in an amount of 100% of the Total Contract Price and must inure to the benefit of persons performing labor or furnishing materials in connection with the work of the proposed Contract. This bond must be maintained in full force and effect until all work under the Contract is completed and accepted by BATA, and until all claims for materials and labor have been paid.

3.2 Performance Bond

The Performance Bond must be in an amount of 100% of the Total Contract Price and must insure the faithful performance by you for all work under the Contract. It must also insure the replacing of, or making acceptable, any defective materials or faulty workmanship.

3.3 Surety Requirements

Sureties for necessary bonds (including Bid Bond, Performance Bond and Payment Bond) must be executed by an admitted surety(ies) insurer acceptable to BATA with a Best Guide Rating of A7 or better and authorized to execute such in the State of California.

Should any surety or sureties be deemed unsatisfactory at any time by BATA notice will be given to that effect, and you must forthwith substitute a new surety or sureties satisfactory to BATA, within 30 days, at your expense; *provided, however,* that the time set out in the Notice of Award for submitting bonds must not be extended thereby. No further payment will be deemed due or will be made under the Contract until the new sureties qualify and are accepted by BATA.

All alterations, time extensions, extra and additional work, and other changes authorized by the Specifications, or any part of the Contract, may be made without securing consent of the surety or sureties on the contract bonds.

SC-4 Time for Performance

The time limit for completion of all construction work (substantial completion) under the Contract is **300 calendar days** commencing on the **sixth (6th) calendar day** following the issuance by BATA of a Notice of Award (NOA).

Should you fail to maintain the progress of the work in conformance with SC-23, Progress Schedule, additional shifts will be required to the extent necessary to ensure that the progress conforms to the above mentioned schedule and that the work will be completed within the time limit specified.

Payment for complying with the requirements in this section is included in the payment for the bid items involved.

SC-5 Beginning of Work, Time of Completion, and Liquidated Damages

Refer to **Part 2.0, Section 9, Notice to Proceed** for anticipated Notice to Proceed issue date.

Comply with Section 8-1.10, Liquidated Damages, of the Standard Specifications.

Liquidated damages shall be $4,000 per day, for every day passed the total working days as stated in Section SC-4, Time for Performance.

DocuSign Envelope ID: 330DEBD6-9A9E-4F34-BDCC-1AC1BAA701E9

SC-6 Contract Data Requirements

Submit to BATA the items shown on the Contract Data Requirement List and the Technical Submittals List (both appearing in this Part 6.0, Special Conditions) in compliance with the times and in the number of copies specified therein. Requirements and procedures for preparing and transmitting items shown on the Technical Submittals List must conform to the following:

6.1 Drawings

Prepare working and shop drawings as required by BATA for the performance of the work. Drawings must be prepared on a reproducible sheet measuring 22 inches x 34 inches, unless otherwise approved. Each drawing must have a blank area 5 inches x 5 inches minimum, located above the title block, for the acceptance stamp. The title block must display the following:

1. Contract number and name
2. District and County
3. Number and title of drawing
4. Date of drawing or revision
5. Name of the Contractor and Subcontractor originating drawing
6. Clear identification of contents and location of work
7. Structure name and number, if any
8. Structural calculations signed and sealed by a California licensed civil Engineer**,** where applicable.

6.2 Detail Drawings

Furnish detail drawings for temporary work and method of proposed construction for the safe and successful completion of the work.

6.3 Submittal

Cover Letter Submittals must be accompanied by a “Submittal Cover Letter” form neatly and properly filled out. Forms will be furnished by BATA.

6.4 Copies of Drawings

Submit six (6) hard copies and one (1) electronic copy (PDF Format) of complete and detailed working and shop drawings, which must be suitable for microfilming, to BATA. Such drawings must include but not be limited to:

1. Fabrication and erection drawings, schedule drawings and manufacturer’s scale drawings. If requested by BATA, Furnish calculations and information substantiating the details shown on the drawings satisfactory to BATA.
2. Plans for temporary structures, and for such other work as may be required for construction, which does not become an integral part of the completed project. Submit two copies of the calculations and other information needed to describe in detail the temporary structures or systems and their intended use.

All submittals for electrical equipment must conform to the provisions of the contract. All electrical materials must be tagged in conformance with the provisions of GC-49, Certificates of Compliance and Testing**,** before delivery to the work site. Untagged electrical materials will be rejected.

DocuSign Envelope ID: 330DEBD6-9A9E-4F34-BDCC-1AC1BAA701E9

6.5 Time for Submittal

Submit drawings and schedules sufficiently in advance of construction requirements as indicated in SC-51. Unless specified elsewhere in the Contract Documents, within 10 days of Notice to Proceed, the Contractor shall prepare a preliminary Schedule of Submittals coordinated with the Progress Schedule, listing Shop Drawings, Product Data, Samples, work descriptions, Subcontractor qualifications, and Field Samples, and indicating therein the times for submitting, reviewing, and processing such submittals. Submit one hard copy and one electronic copy of supporting data such as manufacturer's literature for all items.
Except for shop drawings and test samples, allow 15 days for review.

Allow 20 days for review of shop drawings.

The approval of drawings and schedules will be general and will not be construed as:

1. Permitting any departure from contract requirements;
2. Offering relief from the responsibility for any errors, or omissions including details, dimensions, and materials;
3. Approving departures from details furnished by the Engineer, except as otherwise provided in **Part 10.0 Construction Details**.

6.6 Variations

If drawings show variations from contract requirements because of standard shop practice or for any other reason, such variations must be described in the letter of submittal.

1. BATA may approve or reject any or all variations.
2. If variations result in an adjustment to the contract price or time for performance, the adjustment will be subject to approval by BATA.
3. Failure to describe variations does not relieve you from the responsibility of executing the work in accordance with the Contract, even though such drawings have been approved.

6.7 Corrections

If corrections to the drawings are required, each print will be marked "MAKE CORRECTIONS NOTED" or "AMEND AND RESUBMIT" and the required corrections will be explained. One print and one reproducible copy will be returned for correction.

6.8 Re-submittals

Re-submittals will be handled in the same manner as first submittals, and the same review time will apply.

1. Specific attention is directed to revisions other than those requested by BATA on previous submittals by an accompanying letter or on the resubmitted drawings.
2. If any corrections shown on the drawings constitute a change of contract requirements, BATA must be notified, as previously specified.

6.9 Acceptance

If accepted by BATA, each copy of the drawing will be stamped and dated indicating acceptance. One print and one reproducible copy will be returned.

DocuSign Envelope ID: 330DEBD6-9A9E-4F34-BDCC-1AC1BAA701E9

6.10 Changes

When working and shop drawings have been completed to the satisfaction of BATA, the construction will be carried out in accordance with such drawings, and no changes will be made thereon except upon written direction from the Engineer.

During execution of the work, use only drawings that are either stamped “MAKE CORRECTION NOTED” or “NO EXCEPTIONS TAKEN” and bear BATA’s signature.

6.11 Damages

You are responsible for, and bear all cost of, damages that may result from ordering material or from proceeding with work before approval by BATA.

6.12 Samples

Furnish samples as specified and requested by BATA as soon as possible after request. Unless otherwise indicated, not less than two identical samples of each type required must be submitted. Comply with Section 6-3.05G, Test Samples, of the Standard Specifications for BATA’s testing.

Shipping charges on samples will be prepaid by you. Products for which samples are requested must not be used until approved in writing by BATA. Each sample must be labeled to indicate:

1. Name of project and Contract number
2. Name of the Contractor and Subcontractor or Supplier, if applicable
3. Material or equipment represented
4. Source
5. Name of producer and brand (if any)
6. References to the parts of Part 10.0, which are applicable to the sample
7. Location of work

Certain samples may be tested by BATA. Approved samples not destroyed in testing may be retained by BATA. Samples not approved will be returned at your expense, if so requested at the time of submittal.

6.13 Shipment Letter

A letter must be mailed under separate cover submitting each shipment of samples and detailing the information required in the preceding paragraph. A copy of the letter must be enclosed with the shipment.

6.14 Test Results

Documents such as certificates, reports, and test results specified in Part 10, Construction Details, will be submitted to BATA.

Three copies of each required must be submitted, unless specified otherwise.

Notice of completion of work to hold points specified in the encroachment permit must be given to BATA fourteen (14) calendar days before estimated completion of that work.

6.15 Payment

DocuSign Envelope ID: 330DEBD6-9A9E-4F34-BDCC-1AC1BAA701E9

You will receive no separate payment from BATA for complying with the above requirements and are presumed to have allocated such costs to bid price.

SC-7 Permits and Fees

Secure a copy of BATA acquired permits from BATA and comply with said permits requirements. Pay all charges required to comply with the conditions outlined in the permits.

Refer to Section 5 of the Construction Details for project permits.

Apply for all jurisdictional permits required to perform the work and include the cost of the required permits in the bid price.

Caltrans Permit *– Obtain a copy of the Caltrans encroachment permit issued to the* BAY AREA TOLL AUTHORITY *and comply with all provisions of said permit.*

Apply for Caltrans' construction encroachment permit within two (2) calendar days after the Notice of Award. The Obtained Caltrans' construction encroachment permit will require, but is not limited to, the following provisions:

1. Proof of payment and performance surety bonds.
2. Permit fee may be waived by Caltrans.
3. **Other conditions as stipulated in said permit to be issued by Caltrans to BATA.**

Payment for complying with the requirements in **SC-7** is included in the payment for the bid items involved.

SC-8 Reserved

SC-9 Delivery, Unloading and Storage

You are completely responsible for all delivery, unloading and storage activities required for the completion of work under this contract, including "Owner Furnished Materials" of these special conditions.

SC-10 Work Sequence & Constraints

When required by these Special Conditions, Follow the sequence of operations as set forth therein.

Refer to Section 5 of the Construction Details for additional work sequence & constraint requirements.

SC-11 Mobilization

After acceptance of the contract pursuant to GC-55, Final Inspection and Acceptance of All or a Portion of the Work, the amount, if any, of the contract item price for mobilization in excess of 10 percent of the original contract amount will be included for payment in the first estimate made in conformance with the provisions in GC-59, Invoicing and Progress Payments.

DocuSign Envelope ID: 330DEBD6-9A9E-4F34-BDCC-1AC1BAA701E9

The adjustment provisions in GC-65, Change Requests and Change Notices, and in GC-66, Change Order, and the retention of funds provisions in GC-59 do not apply to the contract lump sum item of mobilization.

SC-12 Reserved

SC-13 Worker's Safety Provisions

Comply with Section 7-1.02K(6), Occupational Safety and Health Standards, of the Standard Specifications.

Supply personal protective equipment, training, and washing facilities required by your lead compliance plan for 5 BATA employees.

13.1

You are responsible for initiating, maintaining and supervising all safety precautions and programs in connection with the Work. To that end you must:
(1) No later than ten (10) days after receipt of the Notice of Award, submit for review your Injury Prevention Program (IPP), which must be site and task specific, and must meet or exceed the requirements of BATA's Injury Prevention Program, and must comply with California Labor Code Section 6401.7. You are responsible for overseeing compliance of their Subcontractors IPP, upon request, the Subcontractors IPP may be reviewed by BATA; and (2) No later than ten days after receipt of Notice of Award, submit the resume of the full time, qualified Safety Representative(s) who reports directly to the your Project Manager or Superintendent, and allocates 100% of their time to safety oversight for field operations on the above mentioned project. Your Safety Representative(s) must have a minimum of five (5) years heavy construction experience in administering safety programs on construction job sites, the last two of which have been administering safety in the construction discipline for which you are contracting with Owner. Your Safety Representatives(s) must be onsite during all operational hours. The full time Safety Representative(s) must set up, carry forward and aggressively and effectively maintain the aforementioned Safety Program covering all phases of the Work. If at any time you wish to replace their Safety Representative(s), provide written notice thirty (30) days prior to change of personnel to BATA. Take all precautions and follow all procedures for the safety of, and provide all protection to prevent injury to, all persons involved in any way in the Work and all other persons, including, without limitation, the employees, agents, guests, visitors, invitees and licensees of BATA who may be involved. These precautions must include, but in no event be limited to the provisions of BATA's IPP. This requirement applies continuously and is not limited to normal working hours.

13.2

Use or storage of explosives is prohibited.

13.3

Open fires on the Project Site are not permitted.

13.4

Forward the Emergency Action Plans to BATA no later than ten days following award.

DocuSign Envelope ID: 330DEBD6-9A9E-4F34-BDCC-1AC1BAA701E9

13.5

No later than five (5) working days prior to the arrival of a crane, provide the most recent annual and quadrennial certificates. Also provide crane operator certificates from the National Commission for the Certifying of Crane Operators (NCCCO), as outlined in IPP**,** no later than five working days prior to a crane operator working onsite.

13.6

Job Hazard Analysis must be forwarded to BATA no later than five working days prior to operation being performed. All accident investigations must be forwarded to BATA no later than five working days following an accident.

13.7 Emergencies

In any emergency affecting the safety of persons or property, or in the event of a claimed violation of any Federal or State safety or health law or regulation, arising out of or in any way connected with the Work or its performance, ensure that at least one of your employees with authority be on duty during working hours, and act immediately to prevent threatened damage, injury or loss or to remedy said violation, whichever is applicable, failing which BATA may immediately take whatever action it deems necessary, including, but not limited to, suspending the Work as provided in GC-69. Also establish and maintain adequate First Aid facilities at locations close to work areas, and mark such locations with signs of adequate size and composition. Also ensure that at least one CPR/ first aid trained employee for every fifteen (15) employees are onsite. No less than two (2) CPR/first aid trained employees be onsite during operational hours, at all times. Forward training records or certificates for initial and renewal CPR/ first aid training to BATA no later than ten (10) days following Notice of Award.

SC-14 Hazardous Materials

Submit Material Safety Data Sheets (MSDS) for all hazardous materials being brought onto the project site, including but not limited to: asphalts, solvents, adhesives, epoxy resins, roofing sealants and bonding agents.

14.1 Removal of Asbestos and Hazardous Substances

Comply with Section 14-11.02A, Unanticipated Discovery of Asbestos and Hazardous Substances, of the Standard Specifications.

If delay of work in the area delays the current controlling operation, the delay will be considered a right of way delay and you will be compensated for the delay in conformance with the provisions in GC-32, Excusable Delays and Extension of Time.

SC-15 Construction Water Conservation

Whenever possible and not in conflict with other requirements of the Contract, minimize the use of water during construction of the project. Watering equipment must be kept in good working order; water leaks must be repaired promptly; and washing of equipment, except when necessary for safety or for the

DocuSign Envelope ID: 330DEBD6-9A9E-4F34-BDCC-1AC1BAA701E9

protection of equipment, is discouraged. All water used for construction purposes such as dust control, compaction, cleaning streets, etc., may be reclaimed water.

SC-16 Reserved

SC-17 Reserved

SC-18 Reserved

SC-19 Final Pay Quantities

Comply with Section 9-1.02C, Final Pay Item Quantities, of the Standard Specifications.

When portions of an item have been designated on the plans or in the Schedule of Quantities and Prices of the contract bid form as final pay quantities, portions so designated will be measured and paid for in accordance with the provisions of **GC-59, Invoicing and Progress Payments**.

SC-20 Schedule of Values

Following execution of the Contract, Prepare and submit for approval a detailed schedule of values of Bid Items and scheduled work activities setting forth the estimated value of the various subdivisions of the work detailed in **SC-23, Progress Schedule**. This breakdown is for the purpose of enabling the Engineer to check and verify the periodical invoices submitted by you in connection with requests for partial payments.

SC-21 Increase or Decreased Quantities, and Quantity Variation

Comply with Section 9-1.06, Changed Quantity Payment Adjustments, of the Standard Specifications.

Review of the adjustment will be made on a force account basis in accordance with **GC-60 Force Account Payment**, at the time mutually acceptable to BATA and you.

SC-22 Project Close-Out Requirements - Record Drawings

During the project, keep a master set of drawings updated, noting any variation of the Work. Upon completion of the Work, produce a master “Record” set of plans by neatly transferring all such noted variations to blueprint copies of the same drawings, and deliver same to the Engineer for signed receipt, certification, and certification.

Payment for complying with the requirements in **SC-22, Project Close-Out Requirements - Record Drawings**, is included in the payment for the bid items involved

SC-23 Progress Schedule

23.1 General Requirements

DocuSign Envelope ID: 330DEBD6-9A9E-4F34-BDCC-1AC1BAA701E9

Scheduling of work under this contract must be performed by you in accordance with this **SC-23 Progress Schedule**. Development of the schedule and project status reporting requirements must employ computerized Critical Path Method (CPM) scheduling.

All schedules prepared must meet the requirements for access, sequencing, construction staging, delivery of Owner furnished materials, contract milestone and completion dates.

The approved baseline schedule, including the most recent accepted update (the Current CPM Schedule), is the basis for evaluating job progress and time extension requests. Responsibility for developing the schedule and monitoring actual progress, as compared to the approved baseline schedule, rests with you.

Inaccuracy of the schedule or failure of the schedule to include any element of the work does not relieve you from responsibility for accomplishing the work.

23.2 Specific Requirements

23.2.1 Software: Prepare all schedules using the latest version of SureTrak or Primavera P6 software. However, other computerized scheduling programs may be allowed by BATA, and will be considered on a case-by-case basis. Use of other scheduling software must be requested and approved in writing, prior to submission of any schedules.

23.2.2 General Submittal Requirements: Submit three (6) copies of each submittal item and an electronic copy on compact disk for all schedule submittals, including but not limited to baseline CPM schedule, CPM schedule update, schedule revisions, recovery schedule, Time Impact Evaluation, and mitigation plan. Unless otherwise specified in this SC-23, procedures for the submission, review and acceptance of all schedule submittals are per SC-6, Contract Data Requirements.

23.3 Schedule Float

23.3.1 Total Float is the amount of time between an activity's early and late start dates, or between its early and late finish dates in the CPM schedule. A baseline CPM schedule with negative float will not be accepted.

23.3.2 Float Ownership: Neither BATA nor you own the float; the Project owns the float. As such, float is considered an expiring resource available to both parties on a non-discriminatory basis.

23.3.3 Early Completion Schedule: Should you submit a baseline schedule that shows completion dates earlier than the contract dates specified in Special Conditions SC-4 and SC-10, BATA, upon acceptance of the schedule, and at its discretion, may adjust by change order the contract dates consistent with the early completion milestone dates in your baseline schedule. No additional compensation will be provided to you for such adjustments to the contract milestones. In the event that BATA elects to not adjust the milestones, the amount of time between the contract milestone date and the early finish date of such milestone will be considered project float and is subject to the provisions contained in this Special Condition. Impact to the early completion date caused by BATA will not be considered as a basis for a time extension or entitlement to extended overhead compensation unless all available float has expired.

DocuSign Envelope ID: 330DEBD6-9A9E-4F34-BDCC-1AC1BAA701E9

23.4 Baseline CPM Schedule

23.4.1 Submittal: Prepare and submit for acceptance by BATA, a detailed CPM Schedule within 6 calendar days after Notice of Award. The schedule must present an orderly and realistic plan for completion of the work, in conformance with all contract requirements. The data date of the baseline CPM schedule must be the date of Notice of Award.

BATA's review and comments on the schedule will be limited to contract compliance. If the schedule is rejected (marked "amend and resubmit"), resubmit the Schedule within five (5) calendar days after receipt of rejection notice. Make corrections to the schedule necessary to comply with contract requirements and revise the schedule to address and incorporate all review comments from the review of the baseline CPM schedule. Provide a line-by-line response to all comments from the review of the baseline CPM schedule.

23.4.2 Detailed Requirements: Have sufficient number of activities to assure adequate planning of the project and to permit monitoring and evaluation of progress and the analysis of time impacts. Depict how you plan to complete the work involved and show all activities that defines the critical path. The baseline CPM schedule must be time scaled and comply with the following requirements:

1. All activities in the schedule, with the exception of the first and last activities, must have a minimum of one predecessor and a minimum of one successor.
2. No activity in the schedule has duration greater than fifteen (15) working days, with the exception of submittal, approval, fabrication and procurement activities, unless otherwise approved by BATA. Activity durations are the total number of actual working days required to perform an activity.
3. Durations for all schedule activities that are sensitive to weather and susceptible to weather delays must be developed so as to allow for the anticipated lost working days per month.
4. Procurement of each major item or type of material or equipment, from submittal, approval, placement of the order through receipt and inspection at the job site, must be identified as a separate activity.
5. Receipt of Owner Furnished Materials and equipment, if any, must be identified as separate activities.
6. Dependencies (or relationships) between activities must be shown.
7. Activities for BATA review and acceptance of submittals and shop drawings for all contract-required material and equipment must be shown. Activities that are dependent on submittal acceptance or material delivery must not be scheduled to start earlier than expected acceptance or delivery dates. You are responsible for all impacts resulting from resubmittal of shop drawings and other items.
8. Time must be included for testing, BATA testing, training of BATA personnel, delivery of spare parts, submittal of operating and maintenance manuals, developing punch lists, completing punch list items, and clean-up of the work included in any completion milestone or contract completion.
9. The interface with the work of other Contractors and agencies such as, but not limited to, utility companies, must be indicated.
10. Detailed subcontractor's work activities must be shown. As determined by BATA, submit, on subcontractor letterhead, a statement certifying that the subcontractor

DocuSign Envelope ID: 330DEBD6-9A9E-4F34-BDCC-1AC1BAA701E9

concurs with your incorporation into the baseline CPM schedule of the subcontractor's related schedules, including activity duration's, and resource loading.

11. The schedule must be accompanied by a list of anticipated non-work days and holidays, but must exclude weekends from this list. This list must be consistent with the non-workdays and holidays identified in your baseline CPM schedule.

23.4.3 Baseline CPM Schedule Narrative A baseline CPM schedule narrative must be submitted. This narrative must describe the basis, assumptions, planned sequence of work operations, production rates, equipment, resources, constraints, etc., used to develop the baseline CPM schedule.

23.4.4 Acceptance of the Baseline CPM Schedule: When the schedule is accepted, it will be considered as the "Approved Baseline CPM Schedule" which will then be updated to reflect the current status of the work. The Approved Baseline CPM Schedule will be the basis of measuring the progress of the project. Such acceptance will be based solely upon the schedule's compliance with the contract requirements.

Acceptance of the schedule by BATA does not relieve you of the responsibility for scheduling, sequencing, coordination and prosecuting the work to comply with the requirements of the contract.

BATA reserves the right to require that you modify, adjust, add to, or clarify any portion of the schedule which may later be discovered to be insufficient or inaccurate for planning, monitoring, or prosecuting the work. No additional compensation will be provided for such modifications, adjustments, additions, or clarifications.

Submittal of the baseline CPM schedule and subsequent schedule updates, is understood to be your representation that the submitted schedule meets all of the requirements of the contract and that work will be executed in the sequence, durations, and methods indicated on the submitted schedule.

23.5 CPM Schedule Update

Following acceptance of the baseline CPM schedule, monitor progress of work and formally update the schedule monthly, effective the last Friday of each month, to reflect actual progress, any anticipated changes to planned activities, and corrections to out-of-sequence logic.

Each update must show all work activities including those already completed. These completed activities must accurately reflect "as-built" information by indicating when activities were actually started and completed, logic revisions, or activity resequencing.

The accepted updated schedule is considered the Current CPM Schedule.

Neither updating, changing or revising any report, schedule or narrative submitted to BATA by you under this Contract, nor BATA's review or acceptance of any such report, schedule or narrative will have the effect of amending or modifying, in any way, the contract completion date or milestone dates or of modifying or limiting, in any way, your obligations under this contract.

The CPM schedule update, updated through the last Friday of each month, must be submitted within seven (7) calendar days following that status date. If BATA so requires prior to a given month's update,

DocuSign Envelope ID: 330DEBD6-9A9E-4F34-BDCC-1AC1BAA701E9

BATA may meet with you and your scheduler to review and agree upon the progress of schedule activities and proposed logic revisions for the given month. This meeting will be conducted 7 calendar days in advance of the last Friday of the month. This meeting, if required, will be referred to as the Monthly Schedule Review Meeting.

BATA will, within seven (7) calendar days after receipt of the updated CPM Schedule, either accept, accept with comments, or reject ("amend and resubmit") the submittal.

1. If accepted, no additional action is required for that period's submittal.
2. If accepted with comments, those comments must be incorporated into the next period's schedule update. Failure to incorporate the comments into the subsequent schedule update will be cause for rejection of the subsequent update.
3. If rejected, you will have seven (7) calendar days to incorporate BATA's comments and resubmit the schedule update for BATA's review. Provide a line-by-line response to all comments from BATA's review of the CPM schedule update. Only one (1) schedule resubmittal per month will be accepted by BATA. Failure to achieve an accepted schedule update for any given month will result in the forfeiture of payment for that associated progress payment period's installment of the schedule pay item (see **SC-23.15 Payment Provisions**).

23.6 Schedule Reports

The following reports for all schedules must be submitted to BATA:

1. Schedule logic report listing activities, their early, late and actual start and finish dates, duration, float, responsibility code and the predecessor and successor relationship of activities sorted by early start.
2. Schedule plots presenting time scaled network diagram showing activities and their relationships.

23.7 Contract Status Report

Provide a written narrative of the contract status report in conjunction with each CPM schedule update which must include:

1. Status of major project components (percent complete, amount of time ahead or behind schedule) and an explanation of how the Project will be brought back on schedule, if delays have occurred.
2. Progress made on critical activities indicated on CPM schedule.
3. Explanations for any lack of work on critical path activities planned to be performed during the previous month.
4. Explanations for any schedule changes, including changes to logic or to activity durations.
5. List of critical activities scheduled to be performed in the next three (3) week period.
6. Status of major material and equipment procurement.
7. Any delays encountered during the reporting period.
8. List of any working days lost due to weather.
9. Any other information pertinent to status of the Contract. Include additional status information requested by BATA at no additional cost.

23.8 Weekly Schedule Report

DocuSign Envelope ID: 330DEBD6-9A9E-4F34-BDCC-1AC1BAA701E9

At the weekly progress meeting, Provide and present a time scaled three-week look-ahead schedule that contains the actual progress for the previous week and planned activities for the upcoming three weeks. The activities in the three-week look-ahead schedule must be based upon and correlated by activity number of the Current CPM Schedule. The format of the weekly schedule report will be subject to review and acceptance by BATA. The weekly schedule report must be prepared using Primavera P6, SureTrak, or Microsoft Excel software. Handwritten schedules will not be accepted by BATA. BATA may request electronic transmittal of the weekly schedule report, either by electronic mail, or compact disks, at least one day ahead of the weekly progress meeting. The weekly schedule reports submitted during a given month will form part of the basis for the CPM schedule update provided for in **SC-23.5, CPM Schedule Update.**

23.9 Schedule Revisions

Periodic updating of the schedule to reflect actual progress is not considered a revision to the schedule. Since scheduling is a dynamic process, such modifications of activity durations and sequences are usual and customary occurrences. Occasions may arise, however, whether directed by BATA, requested by you, or in reaction to project events, where true revisions to the schedule are required beyond those actions associated with the mere updating of progress.

To reflect revisions to the schedule, provide BATA with a written narrative with a description and a reason for each revision. For revisions affecting the sequence of work and activity durations, provide a schedule logic diagram which compares the original sequence and durations to the revised sequence of work and activity durations.

Do not incorporate schedule revisions into any schedule update until the revisions have been accepted by BATA.

BATA will review and advise you of BATA’s decision concerning schedule revision acceptance. If you disagree with BATA's decision, within seven (7) calendar days from receipt of BATA's decision, provide a written narrative explaining or clarifying the revision. If BATA still does not agree with your revision, BATA's decision will govern, and the schedule must be updated in accordance with BATA's decision. Failure to respond in writing within seven (7) calendar days will be contractually interpreted as acceptance of BATA's decision and you waive your rights to subsequently dispute or file a claim regarding BATA's decision.

Upon request by BATA, provide the subcontractor certifications for revisions affecting any subcontractors.

23.10 Recovery Schedule

If the CPM schedule update shows a completion date over twenty (20) working days beyond any contract milestone date, or if specifically directed by BATA, within seven (7) calendar days after the submittal of the CPM schedule update, submit to BATA your proposed schedule revisions to recover the lost time. As part of this submittal, provide a written narrative for each revision made to recover the lost time. The narrative must explain your proposed methodology, basis and assumptions made in the recovery of lost time. If the revisions include sequence changes, provide a schedule diagram comparing the original sequence to the revised sequence of work. The recovery schedule must be prepared as a modification to the Current CPM Schedule that incorporates proposed revisions to recover lost time.

The proposed revisions in a Recovery Schedule must not be incorporated into any schedule update until they have been accepted by BATA.

DocuSign Envelope ID: 330DEBD6-9A9E-4F34-BDCC-1AC1BAA701E9

If your revisions are not accepted by BATA, follow the procedures in **SC-23.9 of the Special Conditions**.

Upon request by BATA, provide the subcontractor certifications for revisions affecting any Subcontractors.

23.11 Time Impact Evaluation for Change Orders and Other Delays

When you become aware of circumstances considered to be a change to the contract (including change notices and force account directives), prepare and submit a Time Impact Evaluation (TIE) which includes both a written narrative and a schedule diagram depicting how the changed work affects other schedule activities. The schedule diagram must show how you propose to incorporate the changed work in the current schedule and how it impacts the critical path of the Current CPM Schedule. You are also responsible for requesting time extensions based on the TIE's impact on the critical path. The diagram must be tied to the main sequence of schedule activities to enable BATA to evaluate the impact of the changed work to the scheduled critical path. Submit the TIE within fourteen (14) calendar days of recognition of such change.

You are responsible for all costs associated with the preparation of TIE's, and the process of incorporating them into the current schedule update. Provide BATA with three (3) copies of each TIE.

Once accepted by BATA, the TIE must be incorporated into the next CPM schedule update. If you and BATA are unable to reach agreement, incorporate changes in accordance with BATA's direction.

If you do not submit a TIE, for a specific issue, by the stated deadline and in accordance with the requirements of this section, it is mutually agreed that you do not require a time extension for said issue and that you waive any rights to claim a time extension based on said issue in the future.

23.12 Time Extensions

You are solely responsible for requesting a time extension for any change, delay, or disruption that, in your opinion, impacts the critical path of the Current CPM Schedule. Time extension will be granted only to the extent that the change, delay, or disruption that impacts the critical path is beyond the control and without fault or negligence of you or any subcontractor.

You may be entitled to a compensable time extension for Owner-caused delays that are not concurrent with Contractor-caused or other excusable but non-compensable delays (i.e., weather). You may be entitled to a non-compensable time extension for Owner-caused delays that are concurrent with Contractor-caused or other excusable but non-compensable delays.

In the event that an Owner-caused delay impacts a contract milestone or the contract completion date, provide a mitigation plan, including a schedule diagram, which explains how the impact can be mitigated. Also include a detailed schedule of values of the labor, equipment and material you would expend to mitigate Owner-caused delay. Submit your mitigation plan to BATA within 7 calendar days from the date of discovery of said impact. You are responsible for the cost to prepare the mitigation plan.

Failure to request time extension, provide TIE, or provide the required mitigation plan within the time specified in this **Special Condition SC-23**, will result waiving your right to both the time extension and the recovery of costs associated with mitigating the delay.

DocuSign Envelope ID: 330DEBD6-9A9E-4F34-BDCC-1AC1BAA701E9

BATA will not consider any time extension request unless the requirements of this **Special Condition SC-23** are met. BATA will not be responsible or liable to you for any constructive acceleration due to your failure to comply with the submission requirements and justification requirements of this contract for time extension requests.

Failure to perform in accordance with the Current CPM Schedule will not be excused by submittal of time extension requests.

23.13 Reserved

23.14 Reserved

23.15 Payment Provisions

In the event that the contract contains a separate pay item for a "Progress Schedule", that pay item will be administered as follows: 25% of the pay item upon acceptance by BATA of an approved baseline schedule as described in **SC-23.4** herein. The remainder of the pay item will be invoiced in equal installments by you computed by dividing the remainder of the pay item amount by the number of progress payment periods from BATA's acceptance date of the baseline CPM schedule or sixty (60) days from the first charged day, whichever is earlier, through contract completion. The final installment will be invoiced when final acceptance of the work occurs. There will be no separate payment provided for all other schedule submittals required in **Special Conditions, SC-23**, other than for the baseline CPM schedule and the CPM schedule update.

If you fail to submit the baseline CPM schedule within sixty (60) calendar days from Notice of Award, 25% of the pay item for "Progress Schedule" will be forfeited. The pay item for any progress payment period for which you do not have an accepted schedule will not be paid by BATA. No payment for a missed period will be made retroactively by BATA. Forfeiture of any payments will not relieve you from the responsibility to submit the CPM schedule update and all other requirements of this section including weekly schedule reports, time impact evaluations and recovery schedules throughout the term of the contract.

In addition to the amount retained by BATA from each progress payment, as provided for in **General Conditions, GC-59**, BATA may withhold additional amounts not to exceed 10% of the total progress payment for your failure to meet the requirements of **Special Conditions, SC-23**. BATA will pay you the amount withheld once BATA has determined that you have satisfactorily complied with the requirements of **Special Conditions, SC-23.**

23.16 Schedule of Values

Determine quantities required to complete work. Submit the quantities as part of the schedule of values. The sum of the amounts for the units of work listed in the schedule of values must equal the contract lump sum price bid for the work. Include overhead and profit for each unit of work listed in the schedule of values. If mobilization is a bid item, include bond premium, temporary construction facilities, and material plants into the mobilization bid item, otherwise, include in each unit of work listed in the schedule of values. Do not include costs for traffic control system in the schedule of values.

The schedule of values may be used to determine partial payment and to calculate payment adjustments for additional costs incurred due to a change order. If a change order increases or decreases the quantities, payment adjustment may be determined as shown elsewhere in these Special Provisions.

DocuSign Envelope ID: 330DEBD6-9A9E-4F34-BDCC-1AC1BAA701E9

The schedule of values must include material description, type, size, and installation method.

SC-24 Reserved

SC-25 Reserved

SC-26 Reserved

SC-27 Reserved

SC-28 Reserved

SC-29 Bridge Tolls

Toll-free passage on the San Francisco-Oakland Bay Bridge will be granted only for cars, trucks and special construction equipment which are clearly marked on the exterior with your identification and which are being operated by you exclusively for the project, and which are used for the purpose of transporting materials and workers directly to and from the project site.

Make application to the Engineer in advance for toll-free passage. You will be held accountable for the proper use of passes issued, and upon completion of the work return unused passes to the Engineer.

Attention is directed to Section 23302, “Failure to Pay Tolls,” of the Vehicle Code.

SC-30 Value Engineering Change Proposals (VECP)

Comply with Section 4-1.07B, Value Engineering Change Proposal, of the Standard Specifications.

30.1 Acceptance of VECP

BATA may accept or reject part or all of any VECP by giving you written notice thereof. Until such notice is issued, you remain obligated to perform in accordance with the terms of the Contract. VECPs will be processed expeditiously; however, BATA is not liable for any delay in acting upon any proposal submitted pursuant to this Article. The decision of BATA as to acceptance of any such proposal is final. The denial of any VECP does not provide you with any basis for claim for damages or delay, nor for release from contractual responsibilities. BATA’s approval of a value engineering proposal does not entitle you to additional compensation or time if the work incorporating the proposal is defective, more expensive, or takes more time.

30.2 Inclusion in Subcontracts

Include value engineering arrangements in any subcontract which, in your judgment, appears to offer sufficient value Engineering potential.

30.3 Identical VECP

DocuSign Envelope ID: 330DEBD6-9A9E-4F34-BDCC-1AC1BAA701E9

A VECP identical to one submitted under any other contract, by this or by any other Contractor, may also be submitted under the Contract, provided that the proposal originated with such Contractor and not with BATA.

30.4 Restrictions

You may restrict BATA's right to use any VECP data by marking it with the following statement:

"This data, furnished pursuant to the Value Engineering article of the Contract, will not be duplicated, used or disclosed in whole or in part, for any purpose except to evaluate the VECP, unless the proposal is accepted by BATA. The restriction does not limit BATA's right to use information contained in this data if it is or has been obtained, or is otherwise available, from Contractor or from another source, without limitations. When this proposal is accepted by BATA, BATA will have the right to duplicate, use and disclose any data in any manner and for any purpose whatsoever, and have others do so whether under this or any Contract."

You have no right to share any future savings derived from incorporation of the VECP in future BATA Contracts.

SC-31 Alternative Methods of Construction

Whenever the plans or specifications provide that more than one specified method of construction or more than one specified type of material or construction equipment may be used to perform portions of the work and leave the selection of the method of construction or the type of material or equipment to be used up to you, it is understood that BATA does not guarantee that every specified method of construction or type of material or equipment can be used successfully throughout all or any part of any project. Attention is directed to Part 2-2 "General Description of Work" of these Contract Documents.

It is your responsibility to select and use the alternative or alternatives, which will satisfactorily perform the work under the conditions encountered.

SC-32 Reserved

SC-33 Quality Control Program

At your own expense, arrange and submit for BATA's approval and implement a Quality Control Program consistent with the requirements of the Standard Specifications.

Regulatory Requirements: California Building Standards Code, Title 24, California Code of Regulations (CCR Title 24). Codes can be found at: http://www.bsc.ca.gov/Home/Current2013Codes.aspx

For CCR, Title 24, Part 11:

1. Comply with the Tier 1 requirements of Appendix A5, "Nonresidential Voluntary Measures," in addition to all other requirements.
2. Use the sample forms referenced in Section 5.408.1.4, "Documentation," to comply with the documentation requirements of Section 5.408, "Construction Waste Reduction Disposal and Recycling."
3. Prepare all verification of compliances required in Section 5.504, "Pollutant Control."

DocuSign Envelope ID: 330DEBD6-9A9E-4F34-BDCC-1AC1BAA701E9

SC-34 Conformity With Contract Documents and Allowable Deviations

Work and materials must conform to the lines, grades, typical cross sections, dimensions and material requirements, including tolerances, shown on the plans or indicated in the specifications. Although measurement, sampling and testing may be considered evidence as to conformity, the Engineer is the sole judge as to whether the work or materials deviate from the plans and specifications, and the Engineer's decision as to any allowable deviations there from is final.

SC-35 Use of Materials Found On the Work

Unless designated as selected material as provided in Section 19-2.03D, "Selected Material" of the Standard Specifications, You, with approval, may use in the proposed construction such stone, gravel, sand or other material suitable in the opinion of the Engineer as may be found in excavation. You will be paid for the excavation of those materials at the contract price for the excavation, but replace at your expense with other suitable material all of that portion of the material so removed and used which was contemplated for use in the work, except that you need not replace, at your expense, any material obtained from structure excavation used as structure backfill. No charge for materials so used will be made against you. Do not excavate or remove any material from within the highway location that is not within the excavation, as indicated by the slope and grade lines, without written authorization.

SC-36 Reserved

SC-37 Reserved

SC-38 Bird Protection

Comply with Section 14-6.03, Bird Protection, of the Standard Specifications.

When ordered, use exclusion devices, nesting prevention measures or remove and dispose of partially constructed and unoccupied nests of migratory or nongame birds on a regular basis to prevent their occupation. Nest removal activities must not result in depositing into or allowing materials to enter waters of this state.

Exclusion devices, nesting prevention measures and nest removal that are ordered by the Engineer will be paid for as extra work as specified in Section 4-1.05, “Changes and Extra Work” of the Standard Specifications. A delay to the controlling operation due to migratory or nongame birds or their nests will be considered a temporary suspension of work under Section 8-1.06, “Suspensions” of the Standard Specifications. Adjustments will be made for delays that the Engineer determines are not due to your failure to perform the provision of the contract in the same manner as for suspensions due to unsuitable weather in Section 8-1.06, “Suspensions,” of the Standard Specifications.

SC-39 Final Inspection and Acceptance

Refer to **GC-55, Final Inspection and Acceptance of All or a Portion of the Work**. This paragraph is amended to include the following:

DocuSign Envelope ID: 330DEBD6-9A9E-4F34-BDCC-1AC1BAA701E9

There will be no portions of the work for which you may be relieved of the duty of maintenance and protection as provided in the above paragraph.

SC-40 Dust Control

Comply with Section 14-9.03 Dust Control, of the Standard Specifications.

BATA does not pay for applying water, dust palliative or both, if ordered to control dust caused by public traffic.

SC-41 Reserved

SC-42 Public Convenience and Safety

42.1 Public Convenience

Comply with Section 7-1.03, Public Convenience, of the Standard Specifications.

Attention is directed **GC-38, Public Convenience and Safety** for provisions relating to the passage of traffic around the work over detours or lane closures.

In the event of a suspension of the work, attention is directed to **GC-69, Suspension of Work**.

You may be required to cover certain signs that regulate or direct public traffic to roadways that are not open to traffic. The Engineer will determine which signs will be covered. Except as otherwise provided for construction area signs in Section 12, Temporary Traffic Control, of the Standard Specifications, furnishing, installing and removing covers will be paid for as extra work as provided in **GC-65, Change Requests and Change Notices**, and **GC-66, Change Orders**.

After the surface of the roadbed has been brought to a smooth and even condition for the passage of public traffic as above provided, any work ordered by the Engineer for the accommodation of public traffic prior to commencing subgrade operations will be paid for as extra work as provided in **GC-65, Change Requests and Change Notices**, and **GC-66, Change Orders**.

Any shaping of shoulders or reshaping of subgrade necessary for the accommodation of public traffic thereon during subgrade preparation and paving operations will be paid for as extra work as provided in **GC-65, Change Requests and Change Notices**, and **GC-66, Change Order**s.

When ordered, furnish a pilot car and driver and flaggers for the purpose of expediting the passage of public traffic through the work under one-way controls, and the cost thereof will be paid for as extra work as provided in **GC-65, Change Requests and Change Notices**, and **GC-66, Change Order**s, except that the cost of flaggers furnished for this purpose will be paid for as provided in **SC-43, Flagging**. At locations where traffic is being routed through construction under one-way controls and when ordered, the movement of your equipment from one portion of the work to another will be governed in accordance with the one-way controls.

In order to expedite the passage of public traffic through or around the work and where ordered, install signs, lights, flares, temporary railing (Type K), barricades and other facilities for the sole convenience and direction of public traffic. Also where directed by the Engineer, furnish competent flaggers whose sole

DocuSign Envelope ID: 330DEBD6-9A9E-4F34-BDCC-1AC1BAA701E9

duties consist of directing the movement of public traffic through or around the work. The cost of furnishing and installing the signs, lights, flares, temporary railing (Type K), barricades, and other facilities, not to be paid for as separate contract items, will be paid for as extra work as provided in **GC-65, Change Requests and Change Notices**, and **GC-66, Change Orders**.

42.2 Public Safety

Comply with Section 7-1.04, Public Safety, of the Standard Specifications.

SC-43 Flagging

Comply with Section 12-1.02, Flaggers, of the Standard Specifications.

You and BATA share the cost of furnishing all flaggers, including transporting flaggers and furnishing stands and towers for flaggers to provide for the passage of traffic through the work. BATA determines the cost under **GC-60, Force Account Payment**, and pays you 1/2 of the cost. Furnishing and operating pilot cars if ordered is change order work as provided in **GC-65, Change Requests and Change Notices,** and**GC-66, Change Orders**.

SC-44 Clearing and Grubbing

In addition to any requirements which may be included in **GC-53, Cleanup**, comply with Section 16, "Clearing and Grubbing," of the Standard Specifications and these special conditions.

Clearing and grubbing operations must result in no visible dust. No material containing lead will be deposited on public roads. Indemnify BATA and State from any costs due to any discharge of material containing lead.

Activities controlled by you, except cleanup or other required work, will be confined within the roadway right of way.

Nothing herein will be construed as relieving you of the responsibility for final cleanup of the highway as provided in **GC-53, Cleanup**, and **GC-55, Final Inspection and Acceptance of All or a Portion of the Work**.

SC-45 Reserved

SC-46 Preservation of Property

Comply with **GC-45, Protection and Restoration of Property**, and Section 5-1.36, Property and Facility Preservation, of the Standard Specifications.

Damaged or injured plants must be removed and disposed of outside the highway right of way in conformance with the provisions in **GC-51, Disposal of Materials**. Replacement planting of injured or damaged trees, shrubs and other plants must be completed not less than 20 working days prior to acceptance of the contract. Replacement plants must be watered as necessary to maintain the plants in a healthy condition. All landscaping within any project temporary construction easement (TCE) or property of which BATA has been granted a permit to enter during the construction period must be left, upon project completion, in a condition equal to or better than the pre-existing construction condition.

DocuSign Envelope ID: 330DEBD6-9A9E-4F34-BDCC-1AC1BAA701E9

Landscaping, hardscape, etc. which is damaged must be replaced in these areas at your expense. Prior to the start of any work within a TCE, provide the Engineer with a photo record, with date shown on the photo, of the existing condition prior to construction. Additionally, tour the area with the Engineer, to confirm the condition of the area with the photos. Failure to provide and perform these duties will result in you restoring the TCE to the satisfaction of the Engineer at your expense. The material and work necessary for the preservation of property will be paid under bid items involved.

SC-47 Utilities

Make arrangements to obtain electrical power, water or compressed air or other utilities required for your operations and make and maintain the necessary service connections at your own expense.

SC-48 Sanitary Facilities

State sanitary facilities will not be available for use by your employees.

SC-49 Reserved

SC-50 Contract Data Requirements List

DESCRIPTION		REFERENCE *	DUE DATE/FREQUENCY
1.	Construction Agreement	Part 4.0	No later than (NLT) sixth (6th) Calendar days following Notice of Award (NOA)
2.	Performance Bond	SC-3	“
3.	Payment Bond	SC-3	“
4.	Certificate(s) of Insurance	SC-2	“
5.	Alternate Form W-9	Part 4.0	“
6.	Material Suppliers List, including subcontractors.	—	NLT ten (10) calendar days following NOA
7.	Personnel to sign Change Orders	GC-24	“
8.	Emergency Contacts	GC-24	“
	EEO Officer – Contractor and all subcontractors	GC-8	“
9.	Full time Safety Representative(s) – Name(s) and resume(s) of person(s).	SC-13	“
10.	Prevailing Wages Rates	GC-8.3	“
11.	Certified Payroll	GC-58	Monthly or when requested by BATA
12.	Executed Subcontracts	GC-20	NLT thirty (30) calendar days of NOA

DocuSign Envelope ID: 330DEBD6-9A9E-4F34-BDCC-1AC1BAA701E9

DESCRIPTION		REFERENCE *	DUE DATE/FREQUENCY
13.	Equipment and Plants – List of Equipment	—	Monthly

* ***GC = General Condition***
SC = Special Condition

This list is intended to summarize the requirements for submittal of documents as specified in the Contract Documents. If conflicts exist between the list and the referenced paragraph, the referenced paragraph will take precedence. Refer to the Special Conditions, General Conditions for required contract data.

For technical documents, refer to Technical Submittals List found in SC-51of the Special Conditions.

SC-51 Technical Submittals List

	ITEM	REFERENCE *	DUE DATE/ FREQUENCY
1.	Schedule of Furnished Materials	SC-8	NLT six (6th) calendar days after Notice to Proceed
2.	Submittal of all Field Notes & Cut Sheets		No less than three (3) weeks in advance of work operation
3.	Injury Prevention Plan (IPP)	SC-13	NLT ten (10) calendar days following NOA
4.	Site Safety Plan (s)	SC-13 GC-38	NLT ten (10) calendar days following NOA
5.	Emergency Action Plan	SC-13	NLT ten (10) calendar days following NOA
6.	Copies of all accident investigations	SC-13	NLT five (5) calendar days following accident
7.	Copies of annual and quadrennial crane certifications	SC-13	NLT five (5) calendar days prior to a crane working onsite
8.	Copies of Job Hazard Analysis	SC-13	NLT five (5) calendar days prior to operation being performed
9.	List of first aid / CPR trained employees and proof of training	SC-13	NLT ten (10) calendar days following NOA
10.	Material Safety Data Sheets (MSDS)	SC-14	NLT ten (10) calendar days following NOA
11.	Reserved	SC-14	

DocuSign Envelope ID: 330DEBD6-9A9E-4F34-BDCC-1AC1BAA701E9

	ITEM	REFERENCE *	DUE DATE/ FREQUENCY
12.	Electrical Utility Shutdowns		At least fifteen (15) calendar days prior notice
13.	Schedule of Values	SC-20	NLT twenty (20) calendar days following NOA
14.	Schedule of Submittals	SC-6	NLT ten (10) days following NTP
15.	Baseline CPM Schedule	SC-23 GC-31	NLT six (6th) calendar days following NOA
16.	Monthly CPM Schedule Updates	SC-23 GC-31	Five (5) days in advance of progress payment
17.	Quality Control Plan	SC-33	NLT six (6th) calendar days following NOA
18.	Debris Containment and Collection Program	GC-53	NLT ten (10) calendar days following NOA
19.	WPCP (Water Pollution Control Plan) or SWPPP (Storm Water Pollution Prevention Plan)	2010 Caltrans STD Specs Section 13	NLT six (6) calendar days following NOA
20.	Product Data Sheets	GC-43	NLT six (6) calendar days following NOA
21.	Warranties	GC-73	Before Final Acceptance
22.	Disposal – Submit Sampling and Analysis Plan		At least fifteen (15) days prior to beginning sampling or analysis
23.	Sampling and Analysis Plan		NLT fifteen (15) days before any sampling or analysis
24.	Health and Safety Plan		At least ten (10) calendar days prior to beginning work
25.	Welding Quality Control Plan	2010 Caltrans STD Specs Section 11-3.02 (C)	Within fifteen (15) calendar days prior to the performance of any welding
26.	Operations & Maintenance Manuals		Before Final Acceptance
27.	Reserved		
28.	Reserved		
29.	Shop Drawings		

DocuSign Envelope ID: 330DEBD6-9A9E-4F34-BDCC-1AC1BAA701E9

	ITEM	REFERENCE *	DUE DATE/ FREQUENCY
30.	Schedule of Values for Electrical Work		NLT six (6) calendar days after Notice to Proceed
31.	Asbestos Related Work Submittals	02080A(3)	
32.	Lead-Related Construction Work Submittals	02082A(3)	
33.	Site Demolition	99-024100	
34.	Selective (Building) Demolition	99-024119	
35.	Shop Drawings for Column Flange & Web Reinforcement Plates and Truss Diagonal Member Strengthening Scheme	99-051205	
36.	Rivets Removal and Replacement Construction Method and Sequence, Including Any Temporary Bracing System Proposal	99-051205	
37.	Column-Base Concrete Pads Enlargement and Anchor Rods Replacement Construction Sequence	99-033005, 99-051205	
38.	Cross-Bracing Tie-Rod Brace Removal and Replacement Sequence	99-051205	
39.	Custom Bi-Fold Wood Doors	99-081412	
40.	Fiber Encapsulation Coating	99-099601	
41.	Metal Wall Panels	99-074213	
42.	Curtain Walls and Aluminum Framing	99-084413	
43.	Lighting Fixtures and Lighting Control Panel	99-265100	
44.	Parking Light Standard	99-265100	

*Provide six (6) hard copies and one (1) electronic copy (PDF Format) of all submittals.

The above table represents only a partial listing of submittal requirements. The above list is a reminder of your responsibility to submit submittals in a timely manner.

The technical submittal list is intended to summarize the requirements for submittal of documents as specified in the Contract Documents. If conflicts exist between the list and the referenced paragraph, the referenced paragraph will take precedence.

DocuSign Envelope ID: 330DEBD6-9A9E-4F34-BDCC-1AC1BAA701E9

PART 7. GENERAL CONDITIONS

DocuSign Envelope ID: 330DEBD6-9A9E-4F34-BDCC-1AC1BAA701E9

7.1 LEGAL RESPONSIBILITIES AND RELATIONSHIPS

GC-1 Applicable Law and Jurisdiction

This Contract incorporates provisions required by the laws of the State of California and the Federal Government. It is your responsibility to determine the applicability of State and Federal laws, rules and regulations to the work to be performed under this Contract.

This Contract is governed by California law. Any lawsuit or legal action arising from this Contract will be commenced and prosecuted in the courts of Alameda County, California.

GC-2 Compliance with Laws and Regulations

Keep informed of, comply with, and cause all of your agents, employees, suppliers and subcontractors of any tier, to observe and comply with all applicable Federal, State, and local laws, regulations, and policies, including, but not limited to, all applicable terms and conditions prescribed for third party contracts by the U.S. Department of Transportation (DOT). Contractor will indemnify, defend, and hold harmless the State, BATA, the municipality or other entity within whose jurisdiction or on whose property the work is being performed, and Commissioners, their Board of Supervisors, Board of Directors, Councils, officers, agents, consultants and employees from any claim, liability, loss, injury or damage arising out of, or in connection with, the performance of this Contract by you and/or your agents, employees or subcontractors, excepting only loss, injury or damage caused by the active or sole negligence or willful misconduct of personnel employed by the indemnities.

GC-3 Contractors' Licensing Requirements

Contractors are required by law to be licensed in the State of California and are regulated by the Contractors' State License Board. Any questions related thereto may be referred to the Registrar of the Board whose address is:

Contractors' State License Board
1020 N Street
Sacramento, CA 95814

GC-4 Independent Contractor

You represent that you are fully experienced and properly qualified to perform the class of work provided for herein, and that it is properly licensed, equipped, organized and financed to perform such work. You must act as an independent Contractor and not as the agent or employee of BATA in performing the Contract, maintaining complete control over its employees. Nothing contained in this Contract or any subcontract awarded by you creates any contractual relationship between any such subcontractor and BATA, and you must perform all work in accordance with your own methods subject to compliance with the Contract.

GC-5 Permits, Licenses, Fees and Notices

DocuSign Envelope ID: 330DEBD6-9A9E-4F34-BDCC-1AC1BAA701E9

As specified in **Part 6.0 - Special Conditions**, or as otherwise required by law, before beginning any work which requires a permit or similar authorization, secure and pay for all necessary licenses, fees, bonds, charges, inspections, customs or import duties, permits, and similar authorizations from all governmental authorities required to fulfill the Contract requirements and the Contractor's obligations.

GC-6 Nondiscrimination

Comply with Section 1735 of the California Labor Code, which reads as follows:

"No discrimination shall be made in the employment of persons upon public works because of race, religious creed, color, national origin, ancestry, physical disability, mental disability, medical condition, marital status, or sex of such persons, except as provided in Section 12940 of the Government Code, and every Contractor for public works violating this section is subject to all the penalties imposed for a violation of this chapter."

In the performance of this Contract, you and your subcontractors must not unlawfully discriminate, harass or allow harassment, against any employee or applicant for employment because of sex, race, color, ancestry, religious creed, national origin, physical disability (including HIV and AIDS), mental disability, medical condition (cancer), marital status, age (over 40), and the denial of family care leave. You and your subcontractors must ensure that the evaluation and treatment of their employees and applicants for employment are free from such discrimination and harassment. You and your subcontractors must comply with the provisions of the Fair Employment and Housing Act (Government Code §12900 *et seq.*) and the applicable regulations promulgated thereunder (California Code of Regulations, Title 2, Section 7285.0 *et seq.*). The applicable regulations of the Fair Employment and Housing Commission implementing Government Code, Section 12290 (a-f), set forth in Chapter 5 of Division 4 of Title 2 of the California Code of Regulations are incorporated into this Contract by reference and made a part hereof as if set forth in full. You and your subcontractors must give written notice of their obligations under this clause to labor organizations with which they have a collective bargaining or other agreement. Include the nondiscrimination and compliance provisions of this clause in all subcontracts to perform work under this Contract. You and your subcontractors must permit access to all records of employment, employment advertisements, application forms, and other pertinent data and records by the State Fair Employment Practices and Housing Commission, or any other agency of the State of California designated by the State, for the purpose of investigation to ascertain compliance with this clause.

GC-7 Prohibited Interests

You covenant that you presently have no interest and will not acquire any interest, direct or indirect, that would conflict in any manner or degree or have the potential of conflicting with the performance of services required under this Contract or the impartial rendering of assistance or advice to BATA. You must further covenant that in the performance of this Contract no person having any such interest will be employed.

No member, officer, employee or agent of BATA, during his/her tenure will have any prohibited interest as defined by California Government Code Sections 1090, et seq. and 87100 et seq., direct or indirect, in this Contract or the proceeds thereof. Prohibited interests include interests of immediate family members, domestic partners, and their employers or prospective employers. Accordingly, you further covenant that you have made a complete disclosure to BATA of all facts of which you are aware upon due inquiry bearing upon any possible interest, direct or indirect, that it believes any member, officer, agent or employee of BATA (or an immediate family member, domestic partner or employer or prospective

DocuSign Envelope ID: 330DEBD6-9A9E-4F34-BDCC-1AC1BAA701E9

employer of such member, officer, agent or employee) presently has, or will have in this Contract, or in the performance thereof, or in any portion of the profits thereunder. Willful failure to make such disclosure, if any, shall constitute grounds for cancellation and termination hereof by BATA.

GC-8 Labor Provisions

8.1 Safety

In addition to your own safety procedures, and any safety procedures required under Federal, state, or local laws or regulations, including compliance with the provisions of the California Occupational Safety and Health Act of 1973 and any additional safety requirements contained in **Part 6.0 Special Conditions**, implement and enforce all safety requirements that are determined by BATA's Safety Coordinator to be applicable to the performance of any Work under this Contract.

8.2 Overtime Requirements

Neither you nor any subcontractor of any tier require or permit any worker to work in excess of eight (8) hours in any day or in excess of forty (40) hours in any work week (defined as seven (7) sequential calendar days) unless such worker receives compensation at a rate not less than one and one-half times the basic rate of pay for all hours worked in excess of eight hours in any day or in excess of forty (40) hours in such work week, whichever is greater. Failure to comply with the preceding requirements will subject you or any subcontractor of any tier to the penalties specified in Labor Code §1813.

8.3 Prevailing Wage Rates

You and all your subcontractors will comply with applicable sections of the California Labor Code and regulations promulgated thereunder (including without limitation, Sections 1720 et seq. and Title 8 of the California Code of Regulations Sections 16000 et seq.) governing the payment of prevailing wages, as determined by the Director of the California Department of Industrial Relations, in regards to all work performed under this Contract. In particular, your attention is drawn to Labor Code Sections 1771 (payment of prevailing wage rate), 1775 (penalty for non-payment), 1776 (payroll records), and 1777.5 (use of apprentices). Appendix C, Wage Determinations, is attached hereto and incorporated herein by this reference.

You and all your subcontractors, to the extent the work of such subcontractors under this Contract is subject to California Labor Code Section 1720 et seq., will be registered with the Department of Industrial Relations pursuant to Labor Code section 1725.5 and will furnish electronic certified payroll records directly to the Labor Commissioner through the internet portal of the Division of Labor Standards Enforcement. BATA reserves the right to require you and all your subcontractors to furnish electronic certified payroll records directly to BATA in addition to the reporting requirement stated above.

8.4 Retention of Labor Records

In the performance of the work specified in this Contract, You are responsible for compliance with California Labor Code Section 1776 pertaining to payroll records. You and all of your subcontractors of any tier must maintain all payrolls and basic payroll records during the course of the work and must preserve them for a period of three (3) years from the completion of the Contract. Such records must contain the names of all employees, their address, social security number, correct classifications, hourly rates of wages paid, daily and weekly number of hours worked, deductions made, and actual wages paid. These records will be made available by you or any of your subcontractors of any tier for inspection,

DocuSign Envelope ID: 330DEBD6-9A9E-4F34-BDCC-1AC1BAA701E9

copying, or transcription by authorized representatives of BATA or the State of California, and you or any of your subcontractors of any tier must permit such representatives to interview employees during working hours on the job.

8.5 Employment of Apprentices

In the performance of the work specified in this Contract, you are responsible for compliance with California Labor Code Section 1777.5, pertaining to the employment of registered apprentices.

8.6 Subcontracts

Insert in all of your subcontracts the clauses set forth in this **GC-8, Labor Provisions** and also a clause requiring its subcontractors to include these clauses in any lower tier subcontracts. You are responsible for compliance by any subcontractor or lower tier subcontractor with the clauses set forth in this **GC-8, Labor Provisions**. Pursuant to Public Contract Code §6109, you are prohibited from performing work on the Project with a subcontractor who is ineligible to perform work on a public works project pursuant to Sections 1777.1 or 1777.7 of the California Labor Code.

GC-9 Hazardous Materials or Unusual Conditions

In the event underground tanks, vaults, materials or unusual conditions as specified in Public Contract Code §7104(a) are encountered during prosecution of the Work, immediately, and before disturbing such conditions, notify BATA in writing of any:

1. Material that you believe may be material that is hazardous waste as defined in Section 25117 of the Health and Safety Code that is required to be removed to a Class I, II or III disposal site in accordance with the provisions of existing law.
2. Subsurface or latent physical conditions at the site differing from those indicated.
3. Unknown physical conditions at the site of any unusual nature, different materially from those ordinarily encountered and generally recognized as inherent in work of the character provided for in this Contract.

BATA will promptly investigate the conditions, and if it finds the conditions to be materially different or to involve hazardous waste, and cause a decrease or increase in the your cost of, or the time required for, performance of any part of the work, will issue a Change Order under the procedures described in **GC-65, Change Requests and Change Notices** and **GC-66, Change Order.** Any suspension of Work will be administered in accordance with the provisions of **GC-69, Suspension of the Work.** If a dispute arises between BATA and you whether the conditions materially differ, or involve hazardous waste, or cause a decrease or increase in your cost of, or time required for, performance of any part of the work, you are not excused from any scheduled completion date provided for by this Contract, but must proceed with all work to be performed under this Contract; *provided, however,* you retain any and all rights provided either by contract or by law which pertain to the resolution of disputes and protests between the contracting parties.

GC-10 Organization Conflicts of Interest

Whenever BATA is awarding a contract that involves the rendering of advice, it will consider whether there exists the potential for bias, because of other activities, relationships or contracts to you, and if so, whether any potential bias can be mitigated acceptably by BATA and you.

DocuSign Envelope ID: 330DEBD6-9A9E-4F34-BDCC-1AC1BAA701E9

Take all reasonable measures to preclude the existence or development of an organizational conflict of interest in connection with work performed under the agreement resulting from this and other BATA solicitations. An organizational conflict of interest occurs when, due to other activities, relationships, or contracts, a firm or person is unable, or potentially unable, to render impartial assistance or advice to BATA; a firm or person's objectivity in performing the contract work is or might be impaired; or a firm or person has an unfair competitive advantage in proposing for award of a contract as a result of information gained in performance of this or some other Project.

Do not engage the services of any subcontractor or independent contractor on any work related to this Agreement if the subcontractor or independent contractor, or any employee of the subcontractor or independent contractor, has an actual or apparent organizational conflict of interest related to work or services contemplated under this Contract.

If at any time during the term of this Contract you become aware of an organizational conflict of interest in connection with the work performed hereunder, you will immediately provide BATA with written notice of the facts and circumstances giving rise to this organizational conflict of interest. Your written notice will also propose alternatives for addressing or eliminating the organizational conflict of interest. If at any time during the period of performance of this Contract, BATA becomes aware of an organizational conflict of interest in connection with your performance of the work hereunder, BATA will similarly notify you. In the event a conflict is presented, whether disclosed by you or discovered by BATA, BATA will consider the conflict presented and any alternatives proposed and meet with you to determine an appropriate course of action. BATA's determination as to the manner in which to address the conflict will be final.

Failure to comply with this section may subject you to damages incurred by the BATA in addressing organizational conflicts that arise out of work performed by you, or to termination of this Contract for breach.

GC-11 Reserved

GC-12 Archaeological/Historical Discoveries

If this project has been designated in the **Part 1.0 Invitation to Bidders** as an archaeological sensitive project, refer to **Part 6.0 Special Conditions**.

Should any archaeological or historical artifacts or skeletal material be discovered or unearthed during construction activities, all work within thirty (30) feet of the find must be halted. The Contractor (Subcontractor) [or Engineer or Inspector as appropriate] must immediately notify BATA, and BATA will initiate procedures in accordance with 36 CFR 800.11, State Law (California Public Resources Code Section 5097.98, Health and Safety Code Section 7050.5, and Alameda County Ordinance Code Sections B6-16 through B6-23. Construction activities within thirty (30) feet of the find must remain halted until authorization is obtained from the Environmental Program Manager, or the Environmental Program Manager's named and designated agent, that construction in the vicinity of the find may resume.

In the event of work suspension pursuant to this section, within twenty-four (24) hours, notify BATA of the costs involved resulting from said work stoppage. Maintain a log of each such stoppage of work, setting forth the date and time of notification of work stoppage, date and time of actual cessation of operations in the area, and date and time of commencement of operations and costs incurred herein. Submit a claim for reimbursement of such costs within seventy-two (72) hours thereof and must notify BATA of the anticipated amount of claim within twenty-four (24) hours of said work suspension. In the event of work

DocuSign Envelope ID: 330DEBD6-9A9E-4F34-BDCC-1AC1BAA701E9

suspension thereunder, exert all reasonable efforts to otherwise utilize labor and equipment affected by the suspension in other portions of the project.

GC-13 Reserved

GC-14 Patent Rights

Any discovery or invention which is an integral part of the items being furnished under this Contract, as well as all information, design, specifications, data and findings which arise or is developed in the course of performing the work under this Contract, becomes the property of BATA.

GC-15 Intellectual Property, Copyright and Patent Infringement

You, upon BATA's request, must defend BATA and Caltrans against any claim against BATA and/or Caltrans for patent, copyright, trademark, trade secret, or other intellectual property infringement based upon BATA's or Caltrans' use of any work, goods, or services provided by you pursuant to this Contract. If BATA requests you to defend against such claim, you must hold BATA and Caltrans harmless from, and indemnify BATA and Caltrans, and municipality if applicable, for any liability arising from the claim, provided that (I) BATA notifies you in writing promptly, but not more than thirty (30) days after BATA has actual notice of the claim; (ii) you have sole control of the defense and all related settlement negotiations, unless otherwise agreed by the Parties; and (iii) BATA gives you all available information and reasonable assistance for that defense. If you fail or refuse to defend any such claim, BATA and/or Caltrans may assume control of the defense and you must indemnify and hold BATA and Caltrans harmless for all fees, costs and expenses associated with or arising from such defense.

This obligation does not apply when the alleged infringement arises entirely from modification of the work, goods, or services by BATA without your approval.

GC-16 Rights in Technical Data

BATA has the right to use, duplicate or disclose, in whole or in part, in any manner and for any purpose whatsoever, and to have or permit others to use: Any manuals, instructional materials prepared for installation, operation, maintenance or training purposes and technical data pertaining to end items, components or processes which were prepared for the purpose of identifying sources, size, configuration, mating and attachment characteristics, functional characteristics and performance requirements ("form, fit and function" data; e.g., specification control drawings, catalog sheets, outline drawing). The term Technical Data as used herein means technical writing, sound records, pictorial reproductions, drawings, or other graphic representations and works of a technical nature, whether or not copyrighted, which are specified to be delivered pursuant to this Contract. The term does not include financial reports, costs analyses, and other information incidental to contract administration.

For copyrighted material, you agree to and do hereby grant to BATA and Caltrans, and to their Commissioners, Directors, officers, agents and employees acting within the scope of their official duties, a royalty-free, nonexclusive and irrevocable license for BATA and/or Caltrans to publish, translate, reproduce, deliver, perform, dispose of, and to authorize others to use, all Technical Data now or hereafter covered by copyright.

DocuSign Envelope ID: 330DEBD6-9A9E-4F34-BDCC-1AC1BAA701E9

No such copyrighted matter will be included in Technical Data furnished hereunder without written notice of the copyright owner granting BATA and State consent to use such copyrighted matter in the manner above described.

Report to BATA promptly and in reasonable written detail each notice or claim of copyright infringement received by you with respect to any Technical Data delivered hereunder.

BATA reserves the right to use the design and the tooling developed for the furnishing of equipment under this Contract in future contracts based on this specification. Maintain design data, including drawings, layouts, and any relevant Engineering data, and all necessary tooling in good order for a minimum of four (4) years after final acceptance of the last items furnished under this Contract, and transfer that data, including tooling, to BATA upon request at no cost to BATA. All plans, drawings, diagrams, schematics, and specifications becomes the property of BATA, unless otherwise designated by BATA.

GC-17 Ownership of Work and Material

BATA owns all materials, work in progress, and finished goods produced by you pursuant to this Contract, for which progress payments have been made and which have been satisfactorily delivered to a designated area. Such ownership must be free of all encumbrances. Nevertheless, you are responsible for risk of loss for those items of Work for which you have care, custody and control, until Final acceptance of all work as discussed in **GC-55, Final Inspection and Acceptance of All or a Portion of the Work**.

Unless otherwise specifically provided in this Contract, provide and pay for materials, equipment, tools, utilities, transportation, and other facilities and services necessary for the prosecution of the Work provided for in this Contract.

Submit to BATA a "Final Release of All Liens and Claims" as a condition precedent to receiving final payment under this Contract.

GC-18 Title and Risk of Loss

Unless otherwise provided for, title to the Work and risk of loss will pass to BATA upon final acceptance of the Work, and furnish or execute all necessary documents of title at that time.

GC-19 Assignment and Delegation

Do not assign any of your rights or delegate any of your responsibilities under this Contract without the prior written consent of BATA.

GC-20 Subcontracts

You are fully responsible and liable for the products and actions of all subcontractors and suppliers of any tier, and must include in each subcontract any provisions necessary to make all of the provisions of this Contract fully effective. Provide all necessary plans, specifications, schedules, and instructions to your suppliers and subcontractors to enable them to properly perform their work. Submit executed copies of all subcontracts entered into pursuant to this Contract to BATA within sixty **(60) calendar days** from issuance of a Notice of Award.

DocuSign Envelope ID: 330DEBD6-9A9E-4F34-BDCC-1AC1BAA701E9

GC-21 Waiver and Non-waiver

A waiver by one party of a right to a remedy for breach of this Contract by the other party is not deemed to waive the right to a remedy for a subsequent breach by the other party. BATA's acceptance of goods, or services or payment under this Contract, does not preclude BATA from recovering against you or your surety for damages due to your failure to comply with this Contract.

GC-22 Antitrust Claims

In entering into a public works contract, or a subcontract to supply goods, services, or materials pursuant to a public works contract, you agree to assign to the awarding body all rights and title to, and all interest in all causes of action it may have under Section 4 of the Clayton Act, or under the Cartwright Act, arising from the purchases of goods, services, or materials pursuant to the public works contracts or subcontracts. This assignment must be made and become effective at the time the awarding body tenders final payment to you, without further acknowledgement by the parties.

GC-23 Stop Notices

BATA will withhold payments otherwise due to you in order to satisfy Stop Notices which have been properly filed, in accordance with the requirements of California Civil Code Title 15, Chapter 4, regarding Stop Notices. Include this **GC - 23, Stop Notices** in all subcontracts and similar documents entered into by you for the performance of Work under this Contract.

7.2 AUTHORIZED REPRESENTATIVES AND COMMUNICATIONS

GC-24 Authorized Representatives

Designate, in writing, before starting work, an Authorized Representative who, during performance of the Contract, has full authority to act on your behalf in all matters within the scope of this Contract.

When the Contractor is comprised of two or more persons, firms, partnerships, or corporations functioning on a joint venture basis, said authorized representative must have the authority to represent and act for the joint venture.

Said authorized representative must be present at the site of the Work at all times while work is actually in progress on the Contract. When work is not in progress and during periods when work is suspended, arrangements acceptable to BATA must be made for any emergency work that may be required.

Whenever said authorized representative is not present on any particular part of the Work where BATA may desire to give direction, orders will be given by BATA, which must be received and obeyed by the superintendent or foremen who may have charge of the particular work in reference to which the orders are given.

Except as hereinafter provided, all orders by BATA are given in writing. Those not so given are considered to be invalid and not binding. Emergency conditions dealing with safety of persons and protection of property are excepted, and such oral directions will be confirmed in writing as soon as possible, but must be immediately complied by you.

DocuSign Envelope ID: 330DEBD6-9A9E-4F34-BDCC-1AC1BAA701E9

BATA will similarly designate, in writing, an Authorized Representative to be its formal contact between BATA and you. Said Authorized Representative will be responsible for all matters relating to the execution of work within the scope of this Contract and will decide all questions which may arise as to the quality or acceptability of the Work and as to the manner of performance and rate of progress of the Work; all questions which may arise as to the interpretation of plans and specifications; all questions as to the acceptable fulfillment of the Contract on the part of you; and all questions as to compensation for work performed.

Written notification to the other party must be provided, in advance, of changes in the name or address or the scope of authority vested in such Authorized Representative.

Each Authorized Representative may, from time to time, delegate to other named individuals certain authority and responsibilities. The names of such individuals, the scope of their authority and responsibility, and the designation of their titles will be communicated to the other party in writing.

The designation of Authorized Representatives of the parties and their delegates as outlined above must take place at the pre-construction meeting as specified in **GC-26, Pre-Construction Meeting.**

GC-25 Notices and Communications

25.1 Notices

All notices and other communications concerning this Contract must be written in English, must bear the number assigned to this Contract by BATA and must follow BATA's correspondence format and reference system. Notices and other communications may be delivered personally, by telegram, by private package delivery, by FAX, or by regular, certified, or registered mail.

The names of the individuals for each of the parties and their addresses to which other communications and correspondence should be delivered will be established and made known to the other party at the pre-construction meeting as specified in **GC-26, Pre-Construction Meeting**.

A notice to BATA will be effective only if it is delivered to BATA's Authorized Representative at the address to be made known to Contractor at the pre-construction meeting as specified in **GC-26, Pre-Construction Meeting**.

A notice to you will be effective only if it is delivered to your Authorized Representative at the address to be made known to BATA at the pre-construction meeting as specified in **GC-26, Pre-Construction Meeting**.

25.2 Drawing/Plan Clarification

A drawing/plan clarification is an answer from the Owner, in response to an inquiry from you, intended to make some requirement(s) of the drawings or plans clearly understood. Drawing clarifications/plan clarifications may be sketches, drawings or in narrative form and will not change any requirement of the drawings or plans. Responses to Contractor inquiries are as outlined in the Article 25.3 “Requests for Information” of these General Conditions.

25.3 Requests for Information (RFIs)

DocuSign Envelope ID: 330DEBD6-9A9E-4F34-BDCC-1AC1BAA701E9

In the event that you, subcontractor or supplier, at any tier, determines that some portion of the drawings, specifications or other contract documents requires clarification or interpretation by the owner, submit a Request for Information (RFI) in writing to BATA. Requests for Information may only be submitted by you and must only be submitted on the Request for Information form provided by BATA. Clearly and concisely set forth the issue for which clarification or interpretation is sought and why a response is needed from BATA. In the RFI, set forth your own interpretation or understanding of the requirement along with the reasons why you have reached such an understanding.

BATA will review all RFI to determine whether they are Requests for Information within the meaning of this Contract. If BATA determines that the document is not a RFI it will be returned to you, unreviewed as to content, for resubmittal as the appropriate document required by the subject matter.

Responses to RFI are issued within five (5) working days of receipt of the request from you unless BATA determines that a longer period of time is necessary to provide an adequate response. If a longer period of time is determined necessary by BATA, BATA will, within five (5) working days of receipt of the request notify you of the anticipated response time. The five (5) working days referred to herein will start on the date stamped received "In From Contractor" by BATA and depends on the date stamped "Out to Contractor" by BATA. If you submit a RFI on an activity with five (5) working days or less of float on the current project schedule, mark the RFI as "Critical." You are not entitled to any time extension due to the time it takes BATA to respond to such Critical request provided that BATA responds within the five (5) working days set forth above.

Responses from BATA will not change any requirement of the Contract documents unless so noted in the response to the RFI. In the event you believe that a response to a RFI will cause a change to the requirements of the Contract, immediately give written notice to BATA in accordance with GC-65, Change Requests and Change Notices. Failure to give such written notice waives your right to seek additional time or cost in accordance with **GC-65.1, Change Requests**, of the Contract documents.

GC-26 Pre-Construction Meeting

Prior to issuance of a Notice to Proceed, a pre-construction meeting will be held at a time and place to be designated by notice from BATA. At this meeting, detailed procedures will be discussed for handling the following items:

1. Authorized Representative
2. Correspondence
3. Notices
4. Change requests and change notices
5. Change orders
6. Submittals
7. Approvals
8. Progress payments
9. Schedules
10. Community relations
11. Inspection plans
12. Requests for Information (RFI)
13. Other pertinent agenda items

Be prepared to discuss the requirements of the following documents at the preconstruction conference:

DocuSign Envelope ID: 330DEBD6-9A9E-4F34-BDCC-1AC1BAA701E9

1. CCR, Title 24, Part 6 - California Energy Code
2. CCR, Title 24, Part 11 - California Green Building Standards Code

GC-27 Project Meetings

BATA will schedule and preside over all meetings (including but not limited to weekly, pre-production, periodic, and special meetings) throughout the progress of the Work. Agendas for the meetings may include, but are not necessarily limited to, discussions of performance observations, problems, conflicts, schedules, delivery schedules, supplier fabrication, quality standards, Contract modifications, and any other topics that BATA determines to be relevant to the project. Your attendance at these meetings is mandatory.

GC-28 Publicity Releases

All publicity releases or releases of reports, papers, articles, maps, or other documents in any way concerning this Contract or the Work hereunder which you or any of your subcontractors desires to make are subject to approval by BATA prior to release.

7.3 TIME FOR PERFORMANCE OF WORK

GC-29 Notice to Proceed

Commence performance of Work under this Contract immediately after receipt of the Notice to Proceed issued by BATA, and continuously and diligently prosecute the Work to completion on or before the time or times set forth in **Part 6.0 Special Conditions** of this Contract. Any work performed or expenses incurred by you prior to your receipt of Notice to Proceed is entirely at your risk.

A forty-eight (48)-hour advance notice will be required before starting work. Contract personnel will be allowed on the job site only during normal working hours unless otherwise authorized by BATA.

GC-30 Time of Completion

Time is of the essence in this Contract. Failure to perform Work, deliver goods, or provide services on time and in accordance with the approved progress schedule is a material breach of this Contract.

Time periods measured in calendar days are computed by excluding the day upon which the period begins to run and including the last day of the period. A calendar day is any day including all legal holidays, Saturday and Sunday.

GC-31 Progress Schedule

Develop and maintain progress schedules in CPM format identifying critical events involved in the performance of the Work under the Contract in accordance with the requirements of **Part 6.0 Special Conditions.**

GC-32 Excusable Delays and Extensions of Time

DocuSign Envelope ID: 330DEBD6-9A9E-4F34-BDCC-1AC1BAA701E9

Except with respect to defaults of Subcontractors, you are considered in default by reason of any failure to perform in accordance with the Contract schedule if such failure arises out of causes beyond the control and without the fault or negligence of the defaulting party. Such causes may include, but are not restricted to, acts of God or of the public enemy, acts of the government in its sovereign or contractual capacity, fires, floods, epidemics, quarantine restrictions, strikes or other labor disputes, freight embargoes, and unusually severe weather, but in every case the failure to perform must be beyond the control and without the fault or negligence of the defaulting party. If the failure to perform by you is caused by the default of a Subcontractor, and if such default arises out of causes beyond the control you or the Subcontractor, and without either parties' fault or negligence you are not in default by reason of any such failure to perform. As used herein, the terms "Subcontractor" and "Subcontractors" mean Subcontractor(s) or Supplier(s) to Contractor at any tier.

GC-33 Failure to Complete the Work on Time

If the Work is not completed by you in the time specified, as that time may be extended as authorized elsewhere in the Contract, it is understood that BATA will suffer damage; and, it being impracticable and extremely difficult to determine the amount of actual damage, it is agreed that Contractor pays as fixed and liquidated damages, and not as a penalty, the sum set forth in **Part 6.0 Special Conditions** of the Contract for each calendar day of delay until the Work is completed and accepted, and you and your surety are liable for the amount thereof.

7.4 PERFORMANCE OF WORK

GC-34 Reserved

GC-35 Temporary Construction Facilities and Utilities

Furnish all temporary construction facilities, utilities, and services that are necessary to prosecute the Work. This includes, but is not limited to, fencing, flagmen, sanitary facilities, security, power, water and weather protection. Remove all temporary facilities upon completion of the Work or when they are no longer needed for your purposes, whichever is earlier.

GC-36 Character of Workmen

If any Subcontractor or person employed by you appears to BATA to be incompetent or to act in a disorderly, improper or unsafe manner, such person will be discharged immediately on the request of BATA, and such person will not again be employed on the Work.

GC-37 Working Environment

Ensure and maintain a working environment free of personal harassment and intimidation between your forces and BATA employees and members of the public at all BATA project sites and in all BATA facilities at which your forces are assigned to work. Conduct that creates an intimidating, hostile, or offensive working environment is prohibited. Failure to comply with the above will be considered a material breach of this Contract.

DocuSign Envelope ID: 330DEBD6-9A9E-4F34-BDCC-1AC1BAA701E9

GC-38 Public Convenience and Safety

Conduct your operations as to offer the least possible obstruction and inconvenience to the public and have under construction no greater length or amount of work than can be prosecuted properly with due regard to the rights of the public. Unless otherwise provided in the Contract, all public traffic must be permitted to pass through the Work with as little inconvenience or delay as possible. Where possible, such traffic must be routed on new or existing paved surfaces. Spillage resulting from hauling operations along or across any public traveled way must be removed immediately by you at your expense. Existing traffic signal and highway lighting systems must be kept in operation for the benefit of the traveling public during progress of the Work, and other forces will continue routine maintenance of existing systems.

Install signs, lights, flares, barricades, and other facilities for the sole convenience and direction of public traffic and furnish competent flaggers or a uniformed police officer whose sole duties consist of directing the movement of public traffic through or around the Work.

Work must be performed in such a manner as to eliminate unnecessary noise, obstructions and other annoyances to occupants. Do not encumber premises with materials, equipment, and/or parking of cars; store materials, equipment and park cars in designated areas.

See **Part 10.0 Construction Details** for additional traffic control requirements, if any.

GC-39 Cooperation/Coordination and Work by Others

Coordinate your Work with all other Contractors and subcontractors performing Work on the site. Schedule your Work so as to avoid conflicts with other Contractors and to avoid damage to completed or incomplete Work. You are responsible for any damage to the Work of other Contractors or subcontractors if your actions resulted in such damage and are a) willful or b) negligent and the proximate cause. Take immediate action to remedy such damage so as to not delay the immediate prosecution of the Work.

GC-40 Security

Provide and be responsible for all security at the job site that is required to protect your material and equipment and all Work in place. You are also responsible for providing all security and traffic control required by any city having jurisdiction in the area where Work is being performed.

GC-41 Product Options, Supplier Approval and Substitutions

For products specified in this Contract or in your submittals by brand name or manufacturer, whether or not followed by the words "or approved equal," select any product or manufacturer named, or submit a request to substitute an equal product or manufacturer. As required by the California Public Contract Code §3400, such request must be made within thirty-five **(35) calendar days** from date of the Notice of Award in order to receive consideration, unless later submission of a request is agreed to by BATA. Submit a separate request for each substitution. The burden of proof as to the equality of any material, process or article rests with you. BATA's determination of the equality or superiority of an article proposed for substitution will be based upon but need not be limited to consideration of such factors as are specified in the Technical Specifications; dimensional compatibility with other materials with which it combines to produce a unified design system; all aspects of finished appearance including form, texture, and color, as it affects other design elements. In the event an approved substitution is more expensive than the specified materials, process or article, the difference in cost of such material, process or article

DocuSign Envelope ID: 330DEBD6-9A9E-4F34-BDCC-1AC1BAA701E9

so furnished is at your cost. You may not make a substitution without BATA's prior written approval. If applicable, specific requirements for the submittal of such requests will be contained in **Part 6.0 Special Conditions**.

BATA will approve or disapprove your request for substitution of suppliers or products within thirty (30) days of BATA's receipt of all information required by BATA for such determination.

GC-42 Source of Materials

You are completely responsible for locating, identifying, and furnishing all materials required to be furnished under this Contract, except for BATA furnished materials specified in **Part 6.0 Special Conditions.**

GC-43 Submittal of Shop Drawings, Product Data and Samples

Working and shop drawings may consist of drawings, diagrams, schedules, or other data prepared by you, or any subcontractor of any tier, manufacturer, supplier or distributor, as are necessary to adequately control the Work or to illustrate or detail some portion of the Work. No change will be made by you in any working or shop drawing after it has been approved by BATA.

Working Drawings for any part of the permanent Work includes, but not be limited to: stress sheets, anchor bolt layouts, shop details, erection plans, equipment lists and any other information specifically required elsewhere in the Contract.

Working drawings for cribs, cofferdams, falsework, temporary support systems, haul bridges, centering and form work and for other temporary work and methods of construction you propose to use, must be submitted when required by the Contract or ordered by BATA.

Product data are illustrations, standard schedules, performance charts, instructions, brochures, diagrams, or other information furnished by you to illustrate materials, products, systems, or equipment for some portion of the Work.

Samples are physical examples that illustrate materials, equipment, or workmanship, and establish standards by which the Work will be judged.

Working drawings and shop drawings, product data, samples, and similar submittals does not modify any Contract requirement, except as expressly allowed by this Contract. The purpose of their submittal is to demonstrate, for those portions of the Work for which submittals are required, the way you propose to comply with Contract requirements.

Review, approve, and submit to BATA all working and shop drawings, product data, samples, or similar submittals required by this Contract, or that are necessary for its proper completion, in accordance with the Schedule for Technical Submittals shown in **Part 6.0, SC-51** and **Part 10.0, Construction Details,** in a sequence that causes no delay in the Work, or in the work of BATA or any other BATA contractor.

By approving and submitting working and shop drawings, alternative construction methods, product data, samples, or similar submittals, you represent that you have determined and verified all related materials, measurements, and construction criteria, and that you have checked and coordinated the information contained within your submittals with the requirements of the Work and this Contract.

DocuSign Envelope ID: 330DEBD6-9A9E-4F34-BDCC-1AC1BAA701E9

You are not relieved of responsibility for any deviation from the requirements of this Contract by BATA's approval of shop and working drawings, product data, samples, plans, programs, schedules, or similar submittals unless you have specifically informed BATA at the time of submittal in writing of the deviation and BATA has given written approval of the specific deviation. You are not relieved of responsibility for errors or omissions in working and shop drawings, product data, samples, plans, programs, schedules or similar submittals by BATA's approval of the submittal. Do not deviate from approved working and shop drawings, product data, samples, or similar submittals without BATA's written approval.

Do not commence any portion of the Work requiring submission of shop or working drawings, product data, samples, or similar submittals until the required submittal has been approved by BATA.

You must direct specific attention, in writing or on resubmitted shop and working drawings, product data, samples, or similar submittals, to revisions other than those required by BATA on previous submittals.

Specific requirements for the submittal of shop and working drawings, product data and samples are contained in **Part 6.0, SC-6, Contract Data Requirements**, and **Part 7.0, GC-43, Submittal of Shop Drawings, Product Data and Samples**.

Payment for furnishing all working and shop drawings, product data and samples is included in the payment for the bid items involved.

GC-44 Reserved

GC-45 Protection and Restoration of Property

In addition to any other requirements imposed by law, shore up, brace, underpin, and protect as may be necessary, all foundations and other parts of all existing structures adjacent to and adjoining the site of the Work which are in any way affected by your operations. Whenever any notice is required to be given by BATA or you to any adjoining or adjacent landowner or other party before beginning any Work under this Contract, such notice is given by you.

Any damage arising from or in consequence of the performance of the Contract, to improvements or property, whether above or below ground, private or public, within or adjacent to the project limits, must be repaired at once by you. If the best interests of BATA require such repair to be made prior to the execution of any part of the Work included in this Contract, BATA will so notify you who will delay or discontinue the performance of that part of the Work until the necessary repair has been made. Such delay will not be considered unavoidable, and no extension of time for completion of the Contract will be made.

When ordered by BATA to make any such repair, start work thereon within four hours and prosecute the same with diligence to completion. Upon failure to so comply with such order, or upon failure to make immediate emergency repairs which are necessary in the best interests of BATA or of the Public, BATA has the authority to cause such repair to be made and to deduct the costs thereof from any money due, or which may become due you.

In any emergency affecting the safety of life or property including adjoining property, you, without special instructions or authorization from BATA, are authorized to act at your discretion to prevent such threatened loss or injury, and you must so act whether or not it is instructed to do so by BATA.

DocuSign Envelope ID: 330DEBD6-9A9E-4F34-BDCC-1AC1BAA701E9

GC-46 Utility Paint Markings

Completely remove all utility paint markings at project completion. Removal must be by use of the high water pressure method only. Payment for removal of all utility paint markings is considered as included in the price paid for other items of work.

GC-47 Reserved

GC-48 Inspection

BATA must at all times have access to the Work and will be furnished every reasonable facility for verifying that the materials and workmanship conform to the requirements of the Contract. BATA may test and inspect, either at your, subcontractor's or supplier's facility, all components, subsystems or workmanship prior to assembly of such components into the Work and prior to acceptance of the Work by BATA. Following such testing and inspection, BATA will issue a deficiency list to you listing those items that fail to comply with the Contract. BATA may either reject or require correction of defective material, workmanship, or nonconformity to this Contract. At your own expense, make available tools, pits, hoists, scaffolds, platforms, other equipment, facilities, drawings, and assistance as may be necessary for inspections or tests.

Costs of the Inspectors are borne by BATA and are not a part of the Contract Price. Costs of re-inspection are back charged to you. The performance of, or the failure to perform, such inspection does not relieve you of any responsibility for complete Contract compliance. Where shop inspection is required by the terms of the Contract, do not ship materials until BATA releases such materials for shipment.

GC-49 Cooperation

It is anticipated that work by another contractor may be in progress adjacent to or within the limits of this project during progress of the work on this contract. The following table lists contracts anticipated to be in progress during this contract.

Contract No.	Co-Rte-PM	Location	Type of Work
Caltrans Contract No. 04-014104	04-Ala-80 PM-2.2	San Francisco-Oakland Bay Bridge Maintenance Yard	Construct Caltrans Maintenance Warehouse Facility
BATA Contract No. C002480	04-Ala-80 PM-2.0	210 Burma Road, Oakland	Installation of Bridge Yard Interior Exhibits

State forces will be working within the project limits during this contract. Plan work to minimize interference with State forces. Submit requests for approval to the Engineer before interrupting any services for the purpose of making or breaking a connection. Include in the request the proposed time period necessary to complete the work. Allow the Engineer 5 days to review each request.

Do not use State telephone facilities.

Comply with Section 7-1.14, "Cooperation," of the Standard Specifications.

DocuSign Envelope ID: 330DEBD6-9A9E-4F34-BDCC-1AC1BAA701E9

GC-50 Removal of Rejected or Unauthorized Work

All work that has been rejected must be remedied, or removed and replaced by you in a manner acceptable to BATA, and no compensation will be made for such removal, replacement or remedial work.

Any work performed outside of the limits of Work shown on the drawings or established by BATA or any extra work done without written authorization of BATA will not be paid for. Upon order of BATA such unauthorized work must be remedied, removed or replaced at your expense.

If you fail to comply promptly with any such order of BATA, BATA may cause the rejected or unauthorized work to be removed, replaced, or remedied, and to deduct the costs thereof from any moneys due to you.

GC-51 Disposal of Materials

Except for materials generated pursuant to **GC-9, Hazardous Materials or Unusual Conditions**, you are responsible for the disposal of all excess materials generated during the performance of this Contract. When any material is to be disposed of outside the project area, other than a public dump, Contractor must first obtain a written permit from the property owner on whose property the disposal is to be made and he must file with BATA said permit or a certified copy thereof together with a written release from the property owner absolving BATA from any and all responsibility in connection with the disposal of material and said property, and before any material is disposed of on said property, obtain written permission from BATA to dispose of the material at the location designated in said permit.

GC-52 Protection of Completed Portions of Work

Protect completed portions of the Work until final acceptance of the Work by BATA. Contractor must take prompt action to remedy or repair any and all damage sustained to Work that is partially or wholly complete and has not yet been accepted by BATA.

GC-53 Cleanup

In addition to any requirements which may be included in **Part 10.0, Construction Details,** at all times during performance of Work under this Contract, keep the site clean from all rubbish and debris. Before final inspection of the Work, clean the material sites and all ground occupied by it in connection with the Work of all rubbish, excess materials, falsework, forms, temporary structures, and equipment. All parts of the Work must be left in a neat and presentable condition.

GC-54 Redlined Construction Drawings

Drawings showing all approved changes made during construction which differ from the approved drawing set for construction, must be furnished by you prior to the acceptance of the Work. Final construction drawings submitted to BATA must be in the form of redlined drawings clearly and neatly indicating all changes made with the approval of BATA and other field changes made which reflect the as-built condition of the Contract. During the construction period, redlined construction drawings must be maintained by you and made available to BATA for review on a daily basis.

GC-55 Final Inspection and Acceptance of All or a Portion of the Work

DocuSign Envelope ID: 330DEBD6-9A9E-4F34-BDCC-1AC1BAA701E9

55.1 Final Inspection and Acceptance of all the Work

When you consider that all of the Work, or any discrete portion of the Work covered under this Contract has reached final completion, inform BATA in writing. If necessary and required, acceptance tests on the Work or discrete portion thereof will be performed as set forth in **Part 10.0, Construction Details,** and the Standard Specifications. BATA will prepare a punch list covering any part of the Work that fails to pass the acceptance tests or is otherwise unacceptable and will reject such work. Proceed immediately to correct or replace unsatisfactory, incomplete or unacceptable work. For items of work not completed by you, BATA may proceed to have the items corrected or completed using BATA or third party forces. The costs of such corrections will be deducted from compensation due to you.

Unless otherwise stipulated, title to such rejected work and risk of loss will remain with you, and you have the responsibility and bear all costs to correct all defects or damage. All acceptance testing of Work which has been rejected previously will be at your expense and costs incurred by BATA to perform such re-tests will be deducted and withheld by BATA from payments otherwise due to you.

Final acceptance of all of the Work or the particular discrete portion deemed complete will occur after successful completion of all testing, corrections of deficiencies, punch list items, and BATA's determination that the Work conforms in all respects to all the Contract requirements. BATA will inform you of such acceptance of the Work by issuing a final certificate stating that the Work has been completed in accordance with the Contract requirements and is accepted under the terms and conditions thereof. Acceptance of the Work will be made by BATA only upon issuance of said certificate together with a final estimate. After BATA has accepted the Work, you will be relieved of the duty of maintaining and protecting the accepted Work and will not be required to perform any further work thereon; and are relieved of your responsibility for injury to persons or property or damage to the Work that occurs after formal acceptance by BATA. Such final acceptance of the Work does not relieve you from responsibility for errors, improper fabrication, non-conformance to a Contract requirement, latent defects, or for deficiencies within your control. Unless otherwise stipulated, all warranties begin with the date of such final acceptance. Coincident with such final acceptance, BATA will record a Notice of Completion.

55.2 Final Inspection and Acceptance of a Portion of the Work

BATA retains the right to direct you to complete a portion of the Work at a time different than that specified in the Contract or reflected in the currently approved progress schedule. Such direction will be in writing. If such direction modifies the amount of compensation or time required for the completion of the Work, a change order will be issued. The following will apply if BATA accepts, pays for, takes title to and occupies the portion of the Work so accepted:

1. You will be relieved of maintenance responsibility for that portion of the Work.
2. Your warranty on that portion of the Work will commence.

7.5 COMPENSATION, PAYMENTS, RECORDS AND AUDIT

GC-56 Compensation

You will accept the compensation set out in the Contract as full payment for:

DocuSign Envelope ID: 330DEBD6-9A9E-4F34-BDCC-1AC1BAA701E9

1. Furnishing all labor, materials, tools, equipment, and incidentals necessary to properly perform and satisfactorily complete all the Work included under this Contract;
2. all loss or damage arising from the nature of the Work, or from the action of the elements, or from any unforeseen difficulties which may be encountered during the prosecution of the Work until final acceptance by BATA;
3. all risks of every description connected with the prosecution of the Work, and for all expenses incurred in consequence of the suspension or discontinuance of the Work as provided in the Contract.

Neither the payment of any progress payment nor any retained percentage will relieve you of any obligation to make good any defective work or material.

No compensation will be made in any case for the loss of anticipated profits.

GC-57 Increased or Decreased Quantities and Quantity Variation

Comply with Section 9-1.06, Changed Quantity Payment Adjustments, of the Standard Specifications.

GC-58 Certified Payrolls

BATA reserves the right to require you and all your subcontractors to furnish electronic certified payroll records directly to BATA on a monthly basis for each week in which any Contract Work is performed or when requested by BATA, in addition to the reporting requirement stated below. You and all your subcontractors must register with the Department of Industrial Relations pursuant to Labor Code section 1725.5 and furnish electronic certified payroll records directly to the Labor Commissioner through the internet portal of the Division of Labor Standards Enforcement.

GC-59 Invoicing and Progress Payments

You are paid for the value of all accepted quantities for the various items of work satisfactorily completed in accordance with the Contract and computed in accordance with the applicable measurement for payment provisions of the Contract. Before any payment becomes due, prepare for BATA's approval a schedule of values of the main categories of the Work included in any items paid for as a lump sum and any items for which partial payment for materials on hand will be made. Each item in the schedule of values must include its proper share of overhead and profit. The values in the schedule will be used only for determining the amount of each progress payment. A proposed schedule may be rejected if any item is determined by BATA to be unbalanced. BATA may request a detailed schedule of values of such items.

Prior to the end of each payment period, prepare and forward to BATA a progress payment invoice in writing consisting of the value of the total amount of Work done plus the value of the acceptable materials on hand. Acceptable materials on hand consist of materials or equipment furnished and delivered by you to the site but not yet incorporated in the Work and properly stored in a location acceptable to BATA. In order for materials on hand to be considered for payment, request payment for them on BATA-furnished forms accompanied by documentation as therein required including, but not limited to, evidence of purchase if appropriate.

BATA will retain **five percent** of such invoiced value as part security for the fulfillment of the Contract by you, and will pay to you the balance not retained, after deducting therefrom all previous payments and all

DocuSign Envelope ID: 330DEBD6-9A9E-4F34-BDCC-1AC1BAA701E9

sums to be kept or retained under the provisions of the Contract. No such invoice or payment will be construed to be an acceptance of any defective work or improper materials.

After 50% of the Contract Amount, as modified by any Change Orders, has been earned, and if satisfactory progress has been made in accordance with the approved Contract progress schedule, BATA will make the remaining progress payments in full, without retention. If, however, you subsequently fall behind the approved Contract progress schedule, BATA may resume retention up to **five percent** of all progress payments, including those payments that were made in full.

In accordance with the provisions of applicable California law, you may be permitted to substitute securities in lieu of the withholding from progress payments specified above. Substitutions must be done in accordance with California Public Contract Code Section 22300 (see below).

Work completed in place is an estimate only, and no inaccuracy or error in said estimates operates to release you or any Surety from damages arising from such Work or from enforcing each and every provision of this Contract, and BATA has the right to subsequently correct any error made in any invoice submitted for payment. No such invoice or payment is required to be made when, as determined by BATA, the Work is not proceeding in accordance with the provisions of the Contract, or when the total value of the Work done since the last estimate amounts to less than $500.00.

In addition to the amounts that BATA may retain as provided hereinabove, BATA may withhold additional amounts from any payments otherwise due to Contractor as it determines necessary to cover:

1. Payments which may be past due and payable for just claims against you or any Subcontractor for labor or materials furnished in performance of the Work under the Contract;
2. For defective work not remedied;
3. For failure of you to make proper payments to any of your Subcontractors;
4. A reasonable doubt that you will complete the Work within the Contract time limits;
5. Damage to other work or property caused by you or your Subcontractor of any tier; if applicable;
6. An amount, not less than 10 percent of the total progress payment, due to the failure to abate, within one (1) working day or immediately in cases of imminent danger, infractions of BATA's Injury Prevention Program (BATA/IPP), Contractor's Safety Plan, CAL/OSHA, FEDERAL OSHA, ANSI or other applicable safety standards;
7. An amount not to exceed 20 percent of the total progress payment, due to four or more repeated infractions in a single payment period of BATA/IPP, Contractor's Safety Plan CAL/OSHA, FEDERAL OSHA, ANSI and all other applicable safety standards.

You are not entitled to have any payment estimates processed or be entitled to have any payment made for work performed so long as any lawful or proper direction concerning the Work or any portion thereof given by BATA remains uncomplied with.

Whenever BATA, in accordance herewith, withholds any moneys otherwise due to you, written notice of the amount withheld and the reasons therefore will be given to you, and when you remove the grounds for such withholding, BATA will pay you the amount so withheld.

Progress payments will be based on a four-week period as mutually agreed to by BATA.

Securities may be substituted in lieu of the withholding of progress payments in accordance with Public Contract Code § 22300, which states:

DocuSign Envelope ID: 330DEBD6-9A9E-4F34-BDCC-1AC1BAA701E9

§ 22300 Substitution of Securities for Retentions; Escrow Account

(a) Provisions shall be included in any invitation for bid and in any contract documents to permit the substitution of securities for any moneys withheld by a public agency to ensure performance under a contract, however, substitution of securities provisions shall not be required in contracts in which there will be financing provided by the Farmers Home Administration of the United States Department of Agriculture pursuant to the Consolidated Farm and Rural Development Act (7 U.S.C. § 1921 et. seq.), and where federal regulations or policies, or both, do not allow the substitution of securities. At the request and expense of Contractor, securities equivalent to the amount withheld shall be deposited with the public agency, or with a state or federally chartered bank in this state as the escrow agent, who shall then pay those moneys to the Contractor. Upon satisfactory completion of the contract, the securities shall be returned to Contractor.

(b) Alternatively, Contractor may request and the Owner shall make payment of retentions earned directly to the escrow agent at the expense of Contractor. At the expense of Contractor, Contractor may direct the investment of the payments into securities and Contractor shall receive the interest earned on the investments upon the same terms provided for in this section for securities deposited by Contractor. Upon satisfactory completion of the contract, Contractor shall receive from the escrow agent all securities, interest, and payments received by the escrow agent from the owner, pursuant to the terms of this section.

(c) Securities eligible for investment under this section shall include those listed in Section 16430 of the Government Code, bank or savings and loan certificates of deposit, interest-bearing demand deposit accounts, standby letters of credit, or any other security mutually agreed to by Contractor and the public agency.

Contractor shall be the beneficial owner of any securities substituted for moneys withheld and shall receive any interest thereon.

Failure to include these provisions in bid and contract documents shall void any provisions for performance retentions in a public agency contract.

For purposes of this section, the term “public agency” shall include, but shall not be limited to, chartered cities.

(d)(1) Any Contractor who elects to receive interest on moneys withheld in retention by a public agency shall, at the request of any subcontractor, make that option available to the subcontractor regarding any moneys withheld in retention by the Contractor from the subcontractor. If the Contractor elects to receive the identical rate of interest received by the Contractor on any retention moneys withheld from the subcontractor by the Contractor, less any actual pro rata costs associated with administering and calculating that interest. In the event that the interest rate is a fluctuating rate, the rate for the subcontractor shall be determined by calculating the interest rate paid during the time that retentions were withheld from the subcontractor. If the Contractor elects to substitute securities in lieu of retention, then, by mutual consent of the Contractor and subcontractor, the subcontractor may substitute securities in exchange for the release of moneys held in retention by the Contractor.

(2) This subdivision shall apply only to those subcontractors performing more than five percent of the Contractor’s total bid.

(3) No Contractor shall require any subcontractor to waive any provision of this section.

DocuSign Envelope ID: 330DEBD6-9A9E-4F34-BDCC-1AC1BAA701E9

(e) The Legislature hereby declares that the provisions of this section are of statewide concern and are necessary to encourage full participation by Contractors and subcontractors in public contract procedures.

(f) The escrow agreement used hereunder shall be null, void, and unenforceable unless it is substantially similar to the following form:

ESCROW AGREEMENT FOR SECURITY DEPOSITS IN LIEU OF RETENTION

This Escrow Agreement is made and entered into by and between

_____ whose address is _____

hereinafter called "Owner,"

_____ whose address is _____

hereinafter called "Contractor" and _____, a state or federally chartered bank, whose address is _____ hereinafter called "Escrow Agent."

For the consideration hereinafter set forth, the Owner, Contractor, and Escrow Agent agree as follows:

(1) Pursuant to Section 22300 of the Public Contract Code of the State of California, Contractor has the option to deposit securities with Escrow Agent as a substitute for retention earnings required to be withheld by Owner pursuant to the Construction Contract entered into between the owner and Contractor for _____ in the amount of _____ dated _____ (hereinafter referred to as the "Contract"). Alternatively, on written request of Contractor, the owner shall make payments of the retention earnings directly to the Escrow Agent. When Contractor deposits the securities as a substitute for Contract earnings, the Escrow Agent shall notify the Owner within 10 days of the deposit. The market value of the securities at the time of the substitution shall be at least equal to the cash amount then required to be withheld as retention under the terms of the Contract between the owner and Contractor. Securities shall be held in the name of _____, and shall designate Contractor as the beneficial owner.

(2) The Owner shall make progress payments to Contractor for those funds which otherwise would be withheld from progress payments pursuant to the Contract provisions, provided that the Escrow Agent holds securities in the form and amount specified above.

(3) When the Owner makes payment of retentions earned directly to the Escrow Agent, the Escrow Agent shall hold them for the benefit of the Contractor until the time that the escrow created under this contract is terminated. The Contractor may direct the investment of the payments into securities. All terms and conditions of this agreement and the rights and responsibilities of the parties shall be equally applicable and binding when the Owner pays the Escrow Agent directly.

(4) Contractor shall be responsible for paying all fees for the expenses incurred by Escrow Agent in administering the Escrow Account and all expenses of the Owner. These expenses and payment terms shall be determined by the Owner, Contractor, and Escrow Agent.

(5) The interest earned on the securities or the money market accounts held in escrow and all interest earned on that interest shall be for the sole account of Contractor and shall be subject to withdrawal by Contractor at any time and from time to time without notice to the Owner.

DocuSign Envelope ID: 330DEBD6-9A9E-4F34-BDCC-1AC1BAA701E9

(6) Contractor shall have the right to withdraw all or any part of the principal in the Escrow Account only by written notice to Escrow Agent accompanied by written authorization from the Owner to the Escrow Agent that Owner consents to the withdrawal of the amount sought to be withdrawn by Contractor.

(7) The Owner shall have a right to draw upon the securities in the event of default by Contractor. Upon seven days' written notice to the Escrow Agent from the owner of the default, the Escrow Agent shall immediately convert the securities to cash and shall distribute the cash as instructed by the Owner.

(8) Upon receipt of written notification from the owner certifying that the Contract is final and complete, and that Contractor has complied with all requirements and procedures applicable to the Contract, Escrow Agent shall release to Contractor all securities and interest on deposit less escrow fees and charges of the Escrow Account. The escrow shall be closed immediately upon disbursement of all moneys and securities on deposit and payments of fees and charges.

(9) Escrow Agent shall rely on the written notifications from the owner and Contractor pursuant to Sections (5) to (8), inclusive, of this agreement and the owner and Contractor shall hold Escrow Agent harmless from Escrow Agent's release and disbursement of the securities and interest as set forth above.

(10) The names of the persons who are authorized to give written notice or to receive written notice on behalf of the owner and on behalf of Contractor in connection with the foregoing, and exemplars of their respective signatures are as follows:

On behalf of Owner:
_____ (Title)
_____ (Name)
_____ (Signature)
_____ (Address)
On behalf of Contractor:
_____ (Title)
_____ (Name)
_____ (Signature)
_____ (Address)
On behalf of Escrow Agent:
_____ (Title)
_____ (Name)
_____ (Signature)
_____ (Address)

(11) Securities eligible for deposit by Contractor or investment hereunder shall be _____ and no others.

At the time the Escrow Account is opened, the Owner and Contractor shall deliver to the Escrow Agent a fully executed counterpart of this Agreement.

DocuSign Envelope ID: 330DEBD6-9A9E-4F34-BDCC-1AC1BAA701E9

IN WITNESS WHEREOF, the parties have executed this Agreement by their proper officers on the date first set forth above.

_____ (Owner)
_____ (Title)
_____ (Name)
_____ (Signature)

_____ (Contractor)
_____ (Title)
_____ (Name)
_____ (Signature)

GC-60 Force Account Payment

Comply with Section 9-1.04, Force Account, of the Standard Specifications.

60.1 Work Performed by Special Forces or Other Special Services

When BATA and you, by mutual agreement, determine that a special service or an item or work cannot be performed by your forces, or those of any of your subcontractors, such service or work item may be performed by a specialist. Invoices for such service or item of work, performed by a specialist on the basis of the current market price thereof, may be accepted without complete itemization of labor, material, and equipment rental costs when it is impracticable and not in accordance with the established practice of the special service industry to provide such complete itemization.

In those instances wherein a Contractor is required to perform work necessitating a fabrication or machining process in a fabrication or machine shop facility away from the jobsite, the charges for that portion of the Work performed in such a facility, may by mutual agreement, be accepted as a specialist billing.

In lieu of the percent markups provided in Section 9-1.04 of the Standard Specifications, a 15 percent markup will be added to the specialist price, less a credit to BATA for any cash or trade discount offered or available, whether or not such discount may have been taken.

GC-61 Prompt Payment

61.1 Payment to Contractor

Public Contract Code Section 20104.50 requiring prompt payment to Contractors is applicable to this contract. Undisputed and properly submitted payment requests will be paid within thirty (30) days of receipt by BATA. Any undisputed and properly submitted payment request not paid within thirty (30) days will accrue interest at the legal rate set forth in Code of Civil Procedure Section 685.010.

DocuSign Envelope ID: 330DEBD6-9A9E-4F34-BDCC-1AC1BAA701E9

Any payment request determined by BATA not to be a proper payment request suitable for payment will be returned to you within seven days of receipt setting forth in writing the reasons why the payment request is not proper.

61.2 Payment to Subcontractors

Adhere to all federal and California prompt payment laws and regulations including Business and Professions Code Section 7108.5 requiring Contractor to pay subcontractors within ten (10) days of receipt of each progress payment to the extent of each subcontractor's interest therein, unless otherwise agreed to in writing.

Notwithstanding the time for payment of retention provided for in Public Contract Code Section 7107(d), pay retention proceeds to subcontractors within thirty (30) days after the subcontractor's work is satisfactorily completed, unless the time for payment calculated pursuant to Section 7107(d) would result in earlier payment of retention to the subcontractor.

GC-62 Final Payment

Final payment does not become due until the following actions have been satisfactorily completed:

1. Satisfactory completion of final inspection of all the Work under the Contract and the issuance by BATA of a Letter of Final Acceptance.
2. The recording of a Notice of Completion by BATA.
3. Contractor submittal to BATA of:
   a. An affidavit that all payrolls, bills for materials and equipment, and other indebtedness connected with the Work have been paid or otherwise satisfied, and
   b. A release of liens and claims arising out of the Contract, to the extent and in the form designated by BATA. If a claim remains unsatisfied after all payments are made, reimburse BATA for all monies that BATA may be compelled to pay in discharging the claim, including all costs and reasonable attorney's fees.

BATA may at its option and at any time retain out of any amounts due to you, sums sufficient to cover claims, filed pursuant to Section 3179 et seq. of the Civil Code.

BATA will make final payment, including outstanding retention, within **30-60 calendar days** of the recording of the Notice of Completion.

The acceptance of final payment by you constitutes a waiver of all claims against BATA arising under the Contract.

GC-63 Project Records

Comprehensive records and documentation relating to this project must be kept by you. The records must include, but are not limited to Contract Documents, Drawings, Specifications, Addenda, Shop Drawings and Submittals, Change Orders, Modifications, Test Records, redlined construction plans, As-Built Drawings, and cost and pricing data. Maintain a complete set of records relating to this Contract for a period of seven years from final payment for this Work. The cost records must be complete and in sufficient detail to allow evaluation of the accuracy and completeness, and currency of the costs or prices. Permit the authorized representatives of BATA to examine and audit all such records and any

DocuSign Envelope ID: 330DEBD6-9A9E-4F34-BDCC-1AC1BAA701E9

subcontracts under this Contract during the time period so specified. In addition, every contract involving the expenditure of public funds in excess of ten thousand dollars ($10,000) entered into by a public entity in the State of California will be subject to the examination and audit of the State Auditor, at the request of the public entity or as part of any audit of the public entity, for a period of three years after final payment under the contract.

7.6 CONTRACT MODIFICATIONS, DISPUTES AND CLAIMS

GC-64 Reserved

GC-65 Change Requests and Change Notices

65.1 Change Requests.

You may make a written request to BATA to modify the Contract (Change Request) based upon the receipt of, or the discovery of information that changes the scope, price, schedule, level of performance, or other facet of the Contract.

Deliver a document entitled **"Change Request"** to BATA within 30 calendar days after receipt of, or the discovery of, information (other than receipt of a **"Change Notice"**) that you believe will cause a change to the scope, price, schedule, level of performance, or other facet of the Contract. Upon receipt of a Change Notice, follow the procedures of **GC-65.2**. All Change Requests, and any Claims based thereon including any request or claim for cumulative impact costs are deemed waived unless a Change Request is delivered to BATA within the 30 calendar days specified herein.

The Change Request must include information necessary to substantiate the effect of the change and any impacts to the work, including any change in schedule or Contract Price, and must include all existing documentation or a description of anticipated documentation. In addition, the Change Request must contain a detailed description of the proposed adjustment to the Contract Price or currently approved progress schedule, or both, and must reference any other provisions of the Contract that will require modification because of the change. If a Change Request proposes an adjustment in the Contract Price, upon request of BATA, submit a complete breakdown of costs including detailed pricing information and back up for all work and any impacts thereto contemplated by the change.

The unavailability of all information necessary to quantify the change does not excuse the timely submission of the Change Request. Supplement the Change Request with additional information or documentation, as it becomes available. If BATA has not received sufficient substantiating documentation or information within a reasonable time after receipt of the Change Request, such insufficiency may be grounds to deny the Change Request.

If a Change Request or portions thereof are acceptable to BATA, BATA will issue a Contract Change Order consistent therewith. If a Change Request or portions thereof are not acceptable to BATA, BATA will notify you in writing.

Any request by you to modify the contract must first be submitted to BATA and proceed as a Change Request pursuant to these provisions. You may submit the matter as a Claim pursuant to GC 68, Claims only if, i) the Change Request has been denied by BATA in whole or in part, or ii) the Change Request has not been resolved within 90 days after receipt by BATA.

DocuSign Envelope ID: 330DEBD6-9A9E-4F34-BDCC-1AC1BAA701E9

In the event of a dispute, Contractor must proceed with the Work without delay, as directed by BATA.

65.2 Change Notice

BATA may, at any time during performance of the Contract notify you of changes to the Contract by issuing a **Change Notice** to that effect. Within 15 calendar days after receipt of such Change Notice, provide to BATA a written response identifying any proposed adjustment in Contract Price, including any adjustment for cumulative impact costs and schedule to perform the changes identified in the Change Notice, unless another time period for response is specified in the Change Notice. BATA will then issue an appropriate Change Order.

If BATA directs you to perform additional work, the basis for compensation for such work must be either: 1) extension of Contract items, 2) negotiated lump sum price, or 3) force account, as determined by BATA. The markups described in **GC-60.1** are the maximum allowed for all additional work directed by BATA.

If you and BATA cannot agree on the appropriate adjustment to the Contract Price or schedule, you may either accept BATA's determination or identify and submit the matter as a Claim pursuant to the provisions of **GC 68,** Claims. In the event of a dispute, proceed with the Work without delay as directed by BATA.

GC-66 Change Orders

A Change Order is a written document issued by BATA, that:

1. Changes the Contract Price, as modified by any previously executed Change Orders, or
2. Alters the scope of Work under the Contract, or
3. Alters the schedule for performance of the Work under the Contract as set forth in the currently approved schedule, or
4. Makes any other change to the Contract, or makes a combination of any of the aforementioned Contract changes.

GC-67 Differing Site Conditions

67.1 Soil Boring or Other Data

Where BATA has included soil boring information or other data in the Contract, they are included for your information only and BATA does not guarantee the accuracy of the information contained therein.

67.2 Notice of Differing Conditions

Comply with Section 4-1.06, Differing Site Conditions, of the Standard Specifications.
BATA will, as soon as practicable, investigate or cause to be investigated the items noted by you and, if it is determined that such conditions do materially so differ and cause an increase or decrease in your cost of or time required for the performance of any part of the Work under the Contract, whether or not changed as a result of such conditions, an equitable adjustment will be made and the Contract modified.

DocuSign Envelope ID: 330DEBD6-9A9E-4F34-BDCC-1AC1BAA701E9

GC-68 Claims

68.1 Claim Defined

"Claim" means a separate demand by you for (A) a time extension, (B) payment of money or damages arising from work done by, or on behalf of, you pursuant to the Contract and payment of which is not otherwise expressly provided for or that you are not otherwise entitled to, or (C) an amount the payment of which is disputed by BATA.

68.2 Claim Requirements

1. Any submittal intended by you to be evaluated by BATA as a Claim must be entitled "Claim".
2. All claims must be submitted by you within thirty (30) days after the date of the event giving rise to the Claim, such as, for example, the denial by BATA of a Change Request, the failure of BATA to respond to a Change Request within ninety (90) days after receipt of required substantiating information and documentation, or the issuance by BATA of a disputed Change Order. Any Claim not submitted within the specified thirty (30) days are deemed waived.
3. Claims must be in writing and must be submitted with all documents necessary to substantiate the Claim. A Claim must state in as much detail as possible the basis for the Claim and the additional compensation or extra time to which you believe you are entitled, including:
    a. A detailed factual account of the events causing the potential claim, including:
        i. Pertinent dates
        ii. Locations
        iii. Work items affected by the potential claim
    b. The Contract documents supporting the potential claim and a statement of the reasons these parts support entitlement
    c. If a payment adjustment is requested, an itemized cost breakdown. Segregate costs into the following categories:
        i. Labor, including:
            1. Individuals
            2. Classifications
            3. Regular and overtime hours worked
            4. Dates worked
        ii. Materials, including:
            1. Invoices
            2. Purchase Orders
            3. Location of materials either stored or incorporated into the work
        iii. Equipment, including:
            1. Detailed descriptions, including make, model and serial number
            2. Hours of use
            3. Dates of use
            4. Equipment rates at the rental rate listed in Labor Surcharge and Equipment Rental Rates in effect when the affected work related to the claim was performed
    d. If a time adjustment is requested:
        i. Dates for the requested time
        ii. Reasons for a time adjustment
        iii. Contract documentation supporting the requested time adjustment
        iv. Time Impact Analysis (TIA). The TIA must demonstrate entitlement to a time adjustment.

DocuSign Envelope ID: 330DEBD6-9A9E-4F34-BDCC-1AC1BAA701E9

e. Identification and copies of your documents and copies of communications supporting the potential claim, including certified payrolls, bills, cancelled checks, job cost reports, payment records, and rental agreements
f. Relevant information, references, and arguments that support the potential claim.

4. If the Claim is silent regarding entitlement to extra time, you are entitled to no extra time in connection with the Claim. If the Claim is silent regarding additional compensation, you are entitled to no additional compensation in connection with the Claim.
5. You must notify BATA promptly in writing of any changes in its estimates of additional compensation or extra time, and the notification must state the reasons for the changes.
6. All Claims and any amendments thereto must include the fully executed certification set forth below. Any Claim submitted without a fully executed certification will be rejected by BATA and returned to you.

I,_____, BEING THE_____(MUST BE AN OFFICER) OF_____(CONTRACTOR), DECLARE UNDER PENALTY OF PERJURY UNDER THE LAWS OF THE STATE OF CALIFORNIA, AND DO PERSONALLY CERTIFY AND ATTEST THAT I HAVE THOROUGHLY REVIEWED THE ATTACHED CLAIM FOR ADDITIONAL COMPENSATION AND/OR EXTENSION OF TIME, AND KNOW ITS CONTENTS, AND SAID CLAIM IS MADE IN GOOD FAITH; THE SUPPORTING DATA IS TRUTHFUL AND ACCURATE; THAT THE AMOUNT REQUESTED ACCURATELY REFLECTS THE CONTRACT ADJUSTMENT FOR WHICH THE CONTRACTOR BELIEVES THE OWNER IS LIABLE; AND, FURTHER, THAT I AM FAMILIAR WITH CALIFORNIA PENAL CODE SECTION 72 AND CALIFORNIA GOVERNMENT CODE 12650, *ET SEQ.*, PERTAINING TO FALSE CLAIMS, AND FURTHER KNOW AND UNDERSTAND THAT SUBMISSION OR CERTIFICATION OF A FALSE CLAIM MAY LEAD TO FINES, IMPRISONMENT, AND/OR OTHER SEVERE LEGAL CONSEQUENCES.

By_____

7. No Claims can be filed later than the date of final payment.

68.3 Claim Review

BATA will respond in writing to your Claim within forty-five (45) calendar days after BATA's receipt of the Claim or BATA may request in writing, within 30 days of receipt of the Claim, any additional information or documentation supporting the Claim or relating to defenses to the Claim BATA may have against you. For claims exceeding $375,000 BATA may, at its option, notify you of extended time periods for review and response.

BATA's written response to the Claim, as further documented, will be submitted to you within fifteen (15) days after receipt of the further information or documentation or within a period of time no greater than that taken by you in producing the additional information, whichever is greater.

68.4 Meet and Confer

If you dispute BATA's written response, or if BATA fails to respond within the time prescribed, you may so notify BATA, in writing, either within fifteen (15) days of receipt of BATA's response or within fifteen (15) days of BATA's failure to respond within the time prescribed, respectively, and demand an informal conference to meet and confer for settlement of the issues in dispute. Upon a demand, BATA will schedule a meet and confer conference within thirty (30) days for settlement of the dispute.

DocuSign Envelope ID: 330DEBD6-9A9E-4F34-BDCC-1AC1BAA701E9

Following the meet and confer conference, if the Claim or any portion remains in dispute, you may file a Government Code claim as provided in Chapter 1 (commencing with Section 910) of Part 3 of Division 3.6 of Title 1 of the Government Code. For purposes of those provisions, the running of the period of time within which a Government Code claim must be filed will be tolled from the time you submit your written Claim pursuant to the above provisions until the time the Claim is denied as a result of the meet and confer process, including any period of time utilized by the meet and confer process.

The above procedures do not apply to Government Code claims for tort damages and are not intended, and will not be construed, to change the time for filing such claims.

68.5 Procedures for Civil Actions

Public Contract Code Section 20104.4, set forth below, establishes the following procedures for all civil actions filed to resolve claims of $375,000 or less under this Contract:

(a) Within 60 days, but no earlier than 30 days, following the filing of responsive pleadings, the court shall submit the matter to nonbinding mediation unless waived by mutual stipulation of both parties. The mediation process shall provide for the selection within 15 days by both parties of a disinterested third person as mediator, shall be commenced within 30 days of the submittal, and shall be concluded within 15 days from the commencement of the mediation unless a time requirement is extended upon a good cause showing to the court or by stipulation of both parties. If the parties fail to select a mediator within the 15-day period, any party may petition the court to appoint the mediator.

(b) (1) If the matter remains in dispute, the case shall be submitted to judicial arbitration pursuant to Chapter 2.5 (commencing with Section 1141.10) of Title 3 of Part 3 of the Code of Civil Procedure, notwithstanding Section 1141.11 of that code. The Civil Discovery Act of 1986 (Article 3 (commencing with Section 2016) of Chapter 3 of Title 3 of Part 4 of the Code of Civil Procedure) shall apply to any proceeding brought under this subdivision consistent with the rules pertaining to judicial arbitration.

(2) Notwithstanding any other provision of law, upon stipulation of the parties, arbitrators appointed for purposes of this article shall be experienced in construction law, and, upon stipulation of the parties, mediators and arbitrators shall be paid necessary and reasonable hourly rates of pay not to exceed their customary rate, and such fees and expenses shall be paid equally by the parties, except in the case of arbitration where the arbitrator, for good cause, determines a different division. In no event shall these fees or expenses be paid by state or county funds.

(3) In addition to Chapter 2.5 (commencing with Section 1141.10) of Title 3 of Part 3 of the Code of Civil Procedure, any party who after receiving an arbitration award requests a trial de novo but does not obtain a more favorable judgment shall, in addition to payment of costs and fees under that chapter, pay the attorney's fees of the other party arising out of the trial de novo.

(c) The court may, upon request by any party, order any witnesses to participate in the mediation or arbitration process.

The above claims procedures are also subject to Public Contract Code § 20104.6, which provides:

(a) No local agency shall fail to pay money as to any portion of a claim that is undisputed except as otherwise provided in the contract.

DocuSign Envelope ID: 330DEBD6-9A9E-4F34-BDCC-1AC1BAA701E9

(b) In any suit filed under Section 20104.4, the local agency shall pay interest at the legal rate on any arbitration award or judgment. The interest shall begin to accrue on the date the suit is filed in a court of law.

7.7 SUSPENSION OF WORK, CONTRACT TERMINATION

GC-69 Suspension of the Work

In addition to the right of BATA to suspend Work under any other provision of this Contract, BATA may require you to suspend all or part of the Work called for by this Contract at any time for up to **ninety** (**90) days** after a written Suspension Order is delivered to you, and for any further period to which the parties may agree. The Suspension Order includes the following:

1. A clear description of the Work to be suspended;
2. Guidance as to the action to be taken on subcontracts; and
3. Other requests for minimizing costs.

Upon receipt of a Suspension Order, comply with its terms immediately and take all reasonable steps to minimize cost allocable to the Work covered by the Order during the period of work stoppage. Within the period specified by the Order, or within any extension of that period to which the parties may agree, BATA may:

1. Terminate the Work covered by the Order as set forth in this section.
2. Cancel the Suspension Order; or
3. Allow the period of the Suspension Order to expire.

Resume work upon the cancellation or expiration of a Suspension Order. An equitable adjustment will be made in the Work scope, Contract Price, or Contract time, as appropriate, and the Contract will be modified in writing in accordance with **GC-32, Excusable Delays and Extensions of Time** and **GC-69, Suspension of the Work** if:

1. The Suspension Order results in an increase in the time required for, or in your cost properly allocable to, the performance of any part of this Contract; and
2. You assert a claim for an adjustment within 30 days after the end of the period of work stoppage; and
3. The Suspension Order was not caused by your default or other act or omission within the control or responsibility of you.

In preparation for and during suspensions of work, take every reasonable precaution to prevent damage to or deterioration of the Work. Repair or replace, at no cost to BATA, Work that is damaged or deteriorated during a work suspension due to your failure to comply with this duty. If BATA determines that you are not taking reasonable precautions and you fail to take the corrective action within five days after written notice from BATA, BATA may cause such action to be taken and recover the reasonable cost thereof from you.

GC-70 Termination for Convenience or in the Public Interest

DocuSign Envelope ID: 330DEBD6-9A9E-4F34-BDCC-1AC1BAA701E9

BATA may terminate this Contract in whole or in part at any time by written notice to you if BATA determines that termination is in the best interest of BATA or the public. If this Contract is so terminated, you are entitled to payment for all Work performed acceptably, all acceptable goods or services ordered by and delivered to you before termination, and all reasonable termination costs, up to the maximum amount payable under this Contract, provided that you provide a final itemized invoice for the above amounts within thirty (30) days after receiving the termination notice.

GC-71 Termination for Default

BATA may, by written notice of default to you, terminate your right to proceed with the Work under the Contract, in whole or with regard to any part if you do not cure or failure to comply with the term of the contract within a period of seven days (or such longer period as BATA may authorize in writing) after receipt of notice from BATA specifying such failure, including, but not limited to, the following:

1. if you fail to supply an adequate working force, or materials of proper quality, or otherwise refuses or fails to prosecute the Work, or any separable part thereof, with such diligence as will ensure its completion within the time specified in this Contract, or authorized extension thereof; or
2. if you fail to make prompt payment to its subcontractors or suppliers upon receipt of progress payments from BATA; or
3. if you persistently disregard laws, ordinances, or instructions of BATA.

In the event of such termination for default, BATA may take over the Work and prosecute the same to completion, by contract or otherwise, and may take possession of and use all or any part of your material, tools, equipment, and appliances as may be on the site of the Work and which are necessary for performance of the Work. Upon completion of such work, you are entitled the return of all unused materials and your equipment, tools and appliances, except that there will be no claim on account of usual and ordinary depreciation, loss, or wear and tear.

If your right to proceed is so terminated, you are not entitled to receive any further payment until the Work is completed. You and your surety(s) will be liable to BATA for any additional costs of completion of the Work, including compensation for additional managerial and administrative services, plus liquidated damages accruing under the terms of this Contract from the Contract completion date, as extended by authorized time extensions, to the date of final completion.

If, after termination for failure to fulfill contract obligations, it is determined that you were not in default, the rights and obligations of the parties will be the same as if the termination had been issued for the convenience of BATA.

GC-72 Contractor's Duties upon Termination

After receipt of a Notice of Termination, either for default or convenience, you must:

1. stop work under the Contract on the date and to the extent specified in the Notice of Termination;
2. place no further orders or subcontracts for materials, services, or facilities, except as may be necessary for completion of such portion of the Work under the Contract as is not terminated;
3. terminate all orders and subcontracts to the extent that they relate to the performance of Work terminated by the Notice of Termination
4. assign to BATA in a manner, at the times, and to the extent directed by BATA, all of the right, title, and your interest under the orders and subcontracts so terminated.

DocuSign Envelope ID: 330DEBD6-9A9E-4F34-BDCC-1AC1BAA701E9

7.8 WARRANTY PROVISIONS

GC-73 Warranty

It is a condition of this Contract that the equipment, materials or design furnished, and workmanship performed by you or any subcontractor or supplier at any tier, complies to the requirements of this contract and must be free of any defect. Neither inspection, testing and acceptance by BATA of such equipment, materials, design or work performed, partial or final payment, nor any provisions of the Contract relieves you from responsibility for any latent defect, gross mistakes or fraud. You and your surety(s) warrant, regardless of the warranties obtained from the Subcontractors, all equipment, materials, design and workmanship for a period of one year from the date of Final Acceptance by BATA of all of the work under the Contract or any discrete portion thereof. Your warranty with respect to work repaired or replaced must also run for one year from the date of repair or replacement. In addition, you must furnish a written guarantee covering all or certain items of work and must extend any warranty from a subcontractor or supplier that exceeds the above warranty period. If such additional or varying guarantees are required, they will be specified in Part 6.0 - Special Conditions of this contract. BATA retains the right, at its sole discretion, to assign to a third Party any warranty received under this Contract.
.

GC-74 Warranty Work

You are responsible for all warranty-covered repair work during the warranty period as specified above. Provide at your own expense, all spare products and tools required for repairs. To the extent practicable, BATA will allow you or your designated representative to perform such work. When warranty repairs are required, BATA and your representative will agree on the most appropriate remedy to be performed within a reasonable time. If you fail to remedy any failure or defect within a reasonable time, BATA has the right to replace, repair, or otherwise remedy the failure or defect at your expense. At its discretion, BATA may also perform such work if it deems necessary to do so to meet its operational commitments or other requirements. Reimburse BATA of all expenses for such work including materials and labor. The hourly shop labor rates are based on BATA's current labor cost accounting system. Reimburse BATA for such work within sixty days of receipt of warranty claim.

GC-75 Warranty on Replaced Parts

Any materials, parts or components that are used for replacement under the initial warranty period are warranted again for the total original warranty period of the replaced particular material, part or component.

GC-76 Systematic Failures

In the event that, during the warranty period, repairs or modifications necessitated by defective design, material, or workmanship occur to an extent in excess of 10 percent of the components used for the same function in the same assembly or subsystem purchased under this Contract, promptly furnish all necessary labor and material to effect such repairs and modifications for every system delivered under the Contract under the terms and conditions outlined, including systems in which the item has not yet failed. When requested by BATA, you are required to provide a written failure analysis report for defective products supplied under this contract and which occurred during the warranty period. The report must be received by BATA within forty-five (45) days from the date of request.

DocuSign Envelope ID: 330DEBD6-9A9E-4F34-BDCC-1AC1BAA701E9

GC-77 Iran Contracting Act of 2010

AB 1650, Iran Contracting Act of 2010, which adds Sections 2200 et seq. to the California Public Contract Code, requires Proposers for contracts equal to or in excess of one million dollars ($1,000,000) to certify, at the time of proposal submission that proposer is not identified on a list created pursuant to subdivision (b) of Section 2203 as a person engaging in investment activities in Iran described in subdivision (a) of Section 2202.5, or as a person described in subdivision (b) of Section 2202.5, as applicable. Submit a signed Bid Form #5, Iran Contracting Act Document.

DocuSign Envelope ID: 330DEBD6-9A9E-4F34-BDCC-1AC1BAA701E9

PART 8. (BLANK)

NOT USED

PART 9. (BLANK)

NOT USED

DocuSign Envelope ID: 330DEBD6-9A9E-4F34-BDCC-1AC1BAA701E9

2010 EDITION OF THE STANDARD PLANS LIST

The standard plan sheets and the revised standard plans (RSPs) applicable to this Contract listed below are included in the project plans.

ABBREVIATIONS, LINES, SYMBOLS AND LEGEND

RSP A10B	**Abbreviations (Sheet 2 of 2)**

CURBS, DRIVEWAY, DIKES, CURB RAMPS AND ACCESSIBLE PARKING

RSP A85	**Chain Link Fence**
A85A	**Chain Link Fence Details**
RSP A87A	**Curbs and Driveways**
RSP A87B	**Hot Mix Asphalt Dikes**
RSP A88A	**Curb Ramp Detail**

DocuSign Envelope ID: 330DEBD6-9A9E-4F34-BDCC-1AC1BAA701E9

APPENDIX A - CONTRACT DRAWINGS / PLANS

DRAWINGS / PLANS ARE BOUND SEPARATELY FROM THIS DOCUMENT AND ARE AVAILABLE ON BATA'S WEBSITE:

http://procurements.mtc.ca.gov/

DocuSign Envelope ID: 330DEBD6-9A9E-4F34-BDCC-1AC1BAA701E9

APPENDIX B – 2010 REVISED STANDARD SPECIFICATIONS

APPLICABLE TO THE 2010 EDITION OF THE STANDARD SPECIFICATIONS ARE BOUND SEPARATELY FROM THIS DOCUMENT AND ARE AVAILABLE ON BATA'S WEBSITE:

http://procurements.mtc.ca.gov/

DocuSign Envelope ID: 330DEBD6-9A9E-4F34-BDCC-1AC1BAA701E9

APPENDIX C - WAGE DETERMINATIONS

WAGE DETERMINATIONS DOCUMENT IS BOUND SEPARATELY FROM THIS DOCUMENT AND IS AVAILABLE ON BATA'S WEBSITE:

http://procurements.mtc.ca.gov/

DocuSign Envelope ID: 330DEBD6-9A9E-4F34-BDCC-1AC1BAA701E9

PART 10. CONSTRUCTION DETAILS

DocuSign Envelope ID: 330DEBD6-9A9E-4F34-BDCC-1AC1BAA701E9

001411 DEPARTMENT-GENERATED CONTAMINATED SOIL

01411A General

01411A(1) Summary

Section 01411 includes specifications for handling, transporting, and disposing of RCRA hazardous waste soil. The RCRA hazardous waste soil is Department-generated contaminated soil.

01411A(2) Definitions

Resource Conservation and Recovery Act (RCRA): Federal law that defines hazardous waste thresholds and provides guidelines for managing solid waste.

Type H soil: Contaminated soil and rock material regulated as a hazardous waste under RCRA.

01411A(3) Site Conditions

A site investigation report, dated July 20, 2015, containing the analytical test results for soil samples and the recommendation for handling the RCRA hazardous waste soil is included in the *Information Handout*.

Type H soil exists as shown in plan sheet L-1.

01411A(4) Submittals

01411A(4)(a) Health and Safety Plan

Submit a detailed health and safety plan (HSP), signed by a CIH, that identifies potential health and safety hazards associated with work involving RCRA hazardous waste soil and specifies work practices that will be used to protect workers from those hazards under 22 CA Code of Regulations and 8 CA Code of Regulations. The HSP must:

1. Identify key site safety personnel
2. Describe risks associated with the work
3. Specify training requirements
4. Specify appropriate personal protective equipment
5. Specify site-specific medical surveillance requirements
6. Specify air monitoring requirements
7. Define appropriate site work zones
8. Specify decontamination requirements

Submit the HSP at least 15 working days before starting the work for review and authorization. Resubmit the HSP with revisions required by the Engineer within 5 business days. Do not start excavation work until the HSP is authorized.

01411A(4)(b) Safety Training Certification

Not Used

01411A(4)(c) Excavation and Transportation Plan

Submit an excavation and transportation plan (ETP) for the excavation, transportation and disposal of Type H soil. Submit the plan at least 20 days before starting excavation work for review and authorization. Resubmit the ETP with revisions required by the Engineer within 5 business days. Do not start excavation work until the plan is authorized.

The plan must comply with Cal/OSHA regulations and must include:

1. Excavation schedule by location and date
2. Dust control measures
3. Transportation equipment and routes
4. Method for preventing spills and tracking material onto public roads
5. Truck waiting and staging areas
6. Site for disposal of Type H soil

DocuSign Envelope ID: 330DEBD6-9A9E-4F34-BDCC-1AC1BAA701E9

7. Example of hazardous waste manifest to be carried by trucks transporting RCRA hazardous waste soil. The hazardous waste manifest must include:
   7.1. US Department of Transportation (US DOT) description including shipping name
   7.2. Hazard class
   7.3. Identification number
   7.4. Handling codes
   7.5. Quantity of material
   7.6. Volume of material
8. Spill contingency plan for RCRA hazardous waste soil

01411A(4)(d) Laboratory Analytical Results

Not Used

01411A(4)(e) Disposal Documentation

Submit documentation of proper disposal from the receiving disposal facility within 5 business days of Type H soil transport from the job site.

01411A(5) Quality Control and Assurance

Excavation and disposal of Type H soil must comply with rules and regulations of the following agencies:

1. US DOT
2. US EPA
3. California EPA
4. Department of Toxic Substances Control
5. RWQCB, Region 2, San Francisco Bay
6. California Air Resources Board
7. Bay Area Air Quality Management District
8. California Department of Resources Recycling and Recovery
9. Cal/OSHA
10. California Department of Public Health

Excavate, transport, and dispose of Type H soil under federal and state laws and regulations and county and municipal ordinances and regulations. Laws and regulations that govern this work include:

1. Health & Safety Code, division 20, chapter 6.5 (California Hazardous Waste Control Act)
2. 22 CA Code of Regulations, division 4.5 (Environmental Health Standards for Management of Hazardous Waste)
3. 8 CA Code of Regulations

01411B Materials

Not Used

01411C Construction

01411C(1) General

Not Used

01411C(2) Health and Safety

Before starting any activity that presents the potential for RCRA hazardous waste soil exposure to employees including state employees, provide a safety training program to these employees, including subsequent training required until completion of work. The safety training program must communicate potential health and safety hazards associated with work involving RCRA hazardous waste soil and instruct personnel in procedures for doing the work safely. The level of training provided must be consistent with the person's job function and must conform to OSHA and Cal/OSHA regulations.

Provide training, personnel protective equipment, and medical surveillance required by the HSP to 3 state employees.

DocuSign Envelope ID: 330DEBD6-9A9E-4F34-BDCC-1AC1BAA701E9

01411C(3) Material Management

Transfer Type H soil directly from the excavation to vehicles approved for transport of RCRA hazardous waste soil by the US DOT. Do not stockpile Type H soil. Prevent the flow of surface runoff from entering the Type H soil excavation area.

Transport Type H soil using:

1. Hazardous waste manifest
2. Hazardous waste transporter with a current DTSC registration certificate and CA Highway Patrol (CHP) Biennial Inspection of Terminals (BIT) Program compliance documentation.

01411C(4) Dust Control

Control dust under section 01411.02C.

01411C(5) Sampling and Analysis

Test the collected Type H soil for any additional acceptance requirements requested by the disposal facility.

01411C(6) Transportation

Do not allow Type H soil to be deposited on public roads. You are responsible for costs due to spillage of Type H soil during transport.

Transport Type H soil using a hazardous waste manifest. Transport Type H soil in transporting vehicles approved for transport of contaminated material by the US DOT. Before traveling on public roads, remove Type H soil from surfaces outside the cargo areas of the transporting vehicles and cover the cargo with tarpaulins or other cover, under the authorized ETP.

01411C(7) Disposal

Dispose of Type H soil at a CA Class I permitted disposal facility within 30 days of completion of excavation work.

Collect and dispose of used, non-reusable protective equipment at an appropriately permitted disposal facility.

01411D Payment

The Department does not pay for additional sampling and analysis required by the receiving landfill.

DocuSign Envelope ID: 330DEBD6-9A9E-4F34-BDCC-1AC1BAA701E9

02080 ASBESTOS-RELATED WORK

02080A General

02080A(1) Summary

This section includes specifications for asbestos-related work.

If asbestos will be disturbed or removed in order to perform the work for this project, any disturbance or removal of asbestos must comply with the regulations. Apply the most stringent requirements if there is a conflict or overlap of requirements.

The results of the asbestos survey conducted at the IERBYS building are contained in table 1 of the reports “Limited Asbestos and Lead-Containing Paint Survey Report, IERBYS Building, Burma Road, Alameda County, California,” dated December 2012, and “Limited Asbestos and Lead-Containing Paint Survey Report, IERBYS Building, Burma Road, Alameda County, California,” dated January 2014, prepared by Geocon Consultants. These reports provide information on the materials and substrates that were tested and the results.

Notify the Engineer immediately if any of the following occur:

Construction activities, other than those already described in the construction work plan, will or may disturb asbestos identified in the asbestos survey reports.

Asbestos-containing material (ACM), asbestos-containing construction material (ACCM), or presumed asbestos-containing material (PACM), not previously identified in the asbestos survey reports, is discovered during construction activities.

02080A(2) Definitions

Regulations: All Federal, State, and local codes, regulations, laws, and requirements.

Department: California Department of Transportation, unless with respect to the Standard Plans and Standard Specifications the context requires that Department mean BAY AREA TOLL AUTHORITY (BATA).

02080A(3) Submittals

Submit copies of your:

1. Asbestos Certification, issued by the California State License Board
2. DOSH registration number, issued by the California Division of Occupational Safety and Health

Baseline Study and Clearance Inspection Report:

Submit baseline study, including analytical test results, before performing any asbestos-related work. Allow 3 days for review and authorization.

Submit clearance inspection report, including analytical test results, at the conclusion of all asbestos-related work.

Work Plans:

1. For construction work that will involve the disturbance or removal of asbestos, submit a construction work plan that includes:
   - 1.1. Schedule, phasing, description, and location of activities that involve the disturbance or removal of asbestos. Include starting and completion dates.
   - 1.2. Summary of techniques to be used for complying with the regulations
   - 1.3. Methods for complying with the requirements in "Methods of compliance" under 8 CA Code of Regs § 1529.
   - 1.4. Medical surveillance program under 8 CA Code of Regs § 1529, or certify that one is not required

DocuSign Envelope ID: 330DEBD6-9A9E-4F34-BDCC-1AC1BAA701E9

1.5. Respiratory protection program under 8 CA Code of Regs § 5144, or certify that one is not required
1.6. Personnel monitoring procedures
1.7. Documentation of required employee training, including required medical examinations, respirator fit test records, and certifications, for all individuals who will perform this work
1.8. Standard procedures for protecting other workers, visitors, and any Department personnel at the jobsite, and for protection of spaces outside the work area from contamination
1.9. Methods for any required protection of heating, ventilation, or air conditioning systems
1.10. Locations of required signage and hygiene facilities
1.11. Federal, State, and local agencies that require notification
1.12. Identification of responsible parties and emergency contacts
1.13. Names, addresses, phone numbers, and certifications for the analytical laboratory, waste transport firm, and disposal facility to be used
1.14. Worker roster, including name, address, and telephone number of each worker, who will be used for each phase or location of work
1.15. Contractor and worker qualifications
1.16. Name, address, and telephone of subcontractors who will perform this work
1.17. Methods for performing the perimeter area air monitoring required by this specification
1.18. Final clearance inspection criteria

Submit the construction work plan to the Engineer before performing any asbestos-related work. Allow 5 days for review and authorization.

Correct any rejected construction work plan and resubmit a corrected plan within 5 days of notification by the Engineer, at which time a new review period of 5 days will begin.

Do not perform any asbestos-related work until the construction work plan has been authorized by the Engineer. The Engineer's review and authorization does not waive any contract requirements and does not relieve you from complying with the regulations.

2. For asbestos-containing waste that is a hazardous waste, submit a hazardous waste work plan that includes:
2.1. Summary of methods and techniques to be used for complying with the regulations for handling, packaging, storing, transporting, and disposing of the hazardous waste
2.2. Contractor and worker qualifications
2.3. Name, address, phone number, U.S. EPA identification number, and DTSC Registered Hazardous Waste Transporters registration number for the waste transport firm. Include method of transportation
2.4. Name, address, phone number, certification, U.S. EPA identification number, and class of the disposal facility to be used
2.5. Proposed job site location to be used for storing any hazardous waste containers

Submit the hazardous waste work plan to the Engineer before handling, packaging, storing, transporting, or disposing of any hazardous waste. Allow 3 days for review and authorization.

Correct any rejected hazardous waste work plan and resubmit a corrected plan within 2 days of notification by the Engineer, at which time a new review period of 3 days will begin.

Do not store, transport, or dispose of any hazardous waste until the hazardous waste work plan has been authorized by the Engineer. The Engineer's review and authorization does not waive any contract requirements and does not relieve you from complying with the regulations.

Worker Roster: An updated worker roster must be submitted and authorized before any worker, not on the current roster, performs any work. Allow 3 days for review and authorization.

Notifications: Submit copies of all notifications required by the regulations.

DocuSign Envelope ID: 330DEBD6-9A9E-4F34-BDCC-1AC1BAA701E9

U.S. Environmental Protection Agency Identification Number Request: If required, submit a request for the U.S. EPA ID number.

Hazardous Waste Manifest: If required, submit a copy of the hazardous waste manifest for each shipment of hazardous waste.

Disposal Documentation: Submit documentation from disposal facility indicating proper disposal of all hazardous waste and nonhazardous asbestos-containing waste, within 5 days of transporting the waste from the job site.

Perimeter Area Air Monitoring and Perimeter Area Surveillance Results: Submit copies of all perimeter area air monitoring and perimeter area surveillance results within 24 hours of receiving the analytical test results.

Department Clearance Inspection: Submit request for Department clearance inspection.

At the conclusion of asbestos-related work, submit a statement that the work has been performed under the regulations and these special provisions.

Final Records:

Submit copies of final records indicating that the asbestos-related work has been performed under the regulations and these special provisions, including:

1. Records of any worker protection monitoring performed.
2. Records required to be maintained by CA Code of Regs § 1529, subsection (n), including any:
   2.1. Objective data relied on for CA Code of Regs § 1529, subsections (f) and (n).
   2.2. Exposure measurements.
   2.3. Medical surveillance.
   2.4. Training records.
   2.5. Data to rebut PACM.
   2.6. Record of required notifications.
3. Daily progress logs.
4. List of workers who performed any asbestos-related work. Include name and any required certifications for each worker.
5. Permits and approvals obtained.

Asbestos Training: Submit descriptive information for the asbestos training.

02080A(4) Quality Control and Assurance

Follow all regulations, including:

Federal:

1. 40 CFR 61, Subpart M_National Emission Standard for Asbestos (NESHAP)
2. 40 CFR 763, Asbestos (AHERA)

State:

1. 8 CA Code of Regs § 1529. Asbestos.
2. 8 CA Code of Regs § 5144. Respiratory Protection
3. 14 CA Code of Regs, Chapter 3.5. Standards For Handling And Disposal Of Asbestos-Containing Waste
4. 22 CA Code of Regs, Division 4.5. Environmental Health Standards For The Management Of Hazardous Waste

Local:

1. Follow all local regulations applicable to the project location.

DocuSign Envelope ID: 330DEBD6-9A9E-4F34-BDCC-1AC1BAA701E9

Qualifications:

All work must be performed by competent persons trained, knowledgeable, qualified, and certified in asbestos-related work, including removal, demolition, handling, and disposal.

All analytical testing must be performed by an analytical laboratory certified by the National Voluntary Laboratory Accreditation Program (NVLAP) or the American Industrial Hygiene Association (AIHA).

Firms to be used for performing baseline study, perimeter area surveillance, perimeter area air monitoring, and clearance testing, including all sample analysis, must not be employed or compensated by any subcontractor, or by other persons or entities hired by subcontractors, who will provide other services or materials for this project.

The following items must be prepared, signed, and stamped by a certified asbestos consultant, currently certified by the California Division of Occupational Safety and Health:

1. Baseline study
2. Construction work plan
3. Hazardous waste work plan, if required
4. All perimeter area air monitoring and perimeter area surveillance results
5. Clearance inspection report

Asbestos Training: You must provide asbestos training, complying with the training requirements for a competent person in 8 CA Code of Regs § 1529, for a maximum of 4 Department personnel. The training must be a minimum of 40 hours.

Preconstruction Meeting:

Before performing any asbestos-related work, attend a preconstruction meeting with your subcontractors and their competent person, key personnel, and field supervisors, who will be performing or overseeing the work. Be prepared to discuss the following topics and documents:

1. Submittals, including the authorized construction work plan and the authorized hazardous waste work plan, if required
2. “Field Quality Control” requirements specified below

The Engineer will determine the time and location of the meeting.

02080B Materials

Not Used

02080C Construction

02080C(1) General

Notify the Engineer at least 15 days before performing any asbestos-related work.

Perform asbestos-related work under the authorized construction work plan and the hazardous waste work plan, if required.

Only workers listed on the roster in the authorized work plans must be used to perform the work.

Minimize disturbance of asbestos that is to remain in place.

02080C(2) Asbestos-Containing Waste

Handle, package, store, transport, and dispose of all asbestos-containing waste under the regulations. Apply the most stringent requirements if there is a conflict or overlap of requirements.

DocuSign Envelope ID: 330DEBD6-9A9E-4F34-BDCC-1AC1BAA701E9

Nonhazardous Asbestos-Containing Waste: If the asbestos-containing waste is a nonhazardous waste, dispose of the waste at an appropriately permitted disposal facility under section GC-51, Disposal of Materials of the Special Provisions.

Hazardous Waste: If the asbestos-containing waste is a hazardous waste, comply with the following additional requirements:

1. In addition to the labeling and marking requirements in 22 CA Code of Regs §§ 66262.31 and 66262.32, mark labels with:
   1.1. Date the hazardous waste was generated.
   1.2. Composition and physical state of the hazardous waste.
   1.3. Contractor or subcontractor name.
   1.4. Contract number.
   1.5. Name, address, and telephone number of the Engineer.
2. If containers are stored within the job site limits, store them in a secured enclosure. Acceptable secure enclosures include a locked chain link fenced area or a lockable shipping container located within the job site limits.
3. Dispose of the waste at an appropriately permitted hazardous waste disposal facility, located in California, under the requirements of the disposal facility operator, within 30 days.
4. The Engineer will obtain the U.S. EPA ID number and will sign all manifests as the generator, within 2 days of receiving your request for the number.

02080C(3) Field Quality Control

Critical barriers, or other barrier or isolation methods that are used in performing the asbestos-related work, must not be removed until satisfactory results are obtained from both the clearance inspection report and the Department's clearance inspection.

Baseline Study:

Before performing any asbestos-related work prepare a baseline study, consisting of a visual examination, aggressive air sampling, and analytical test results, to determine the initial conditions in the area where the asbestos-related work will be performed.

Visual examination must comply with the requirements of ASTM E1368.

Take 5 aggressive air samples at the locations determined by your certified asbestos consultant and authorized by the Engineer.

Analyze the air samples by transmission electron microscopy (TEM), and comply with the requirements of 40 CFR Part 763, Appendix A, Subpart E.

Perimeter Area Air Monitoring and Perimeter Area Surveillance:

When critical barriers or other barrier or isolation methods are used, perimeter area air monitoring and perimeter area surveillance must be conducted on the initial day of asbestos disturbance or removal activities.

When critical barriers or other barrier or isolation methods are not used, perimeter area air monitoring and perimeter area surveillance must be conducted on the initial day of asbestos disturbance or removal activities, and every day thereafter these activities are performed, until the conclusion of these activities.

Perimeter area air monitoring and perimeter area surveillance must comply with the requirements of 8 CA Code of Regs § 1529.

Any deficiencies discovered by perimeter area air monitoring or perimeter area surveillance must be corrected immediately.

Clearance Inspection Report:

DocuSign Envelope ID: 330DEBD6-9A9E-4F34-BDCC-1AC1BAA701E9

At the conclusion of asbestos-related work prepare a clearance inspection report, consisting of a visual examination, aggressive air sampling, and analytical test results, to determine the final conditions in the area where the asbestos-related work was performed.

Visual examination must comply with the requirements of ASTM E1368.

Take 5 aggressive air samples at the same locations where samples were taken in the baseline study.

Analyze the air samples by transmission electron microscopy (TEM), and comply with the requirements of 40 CFR Part 763, Appendix A, Subpart E.

The visual examination for the clearance inspection report must show that final conditions, in the area where the asbestos-related work was performed, are equal to or better than the initial conditions.

The asbestos fiber concentrations from the air samples taken for the clearance inspection report must be less than or equal to those in the baseline study.

Department Inspections:

The Department may conduct perimeter area air monitoring or perimeter area surveillance when you are performing asbestos disturbance or removal activities.

At the conclusion of asbestos-related work, the Department will perform a clearance inspection. The inspection will include a visual inspection, and aggressive air clearance sampling, if applicable.

Submit a request for a Department clearance inspection once you have completed the asbestos-related work. Allow the Engineer at least 2 days to perform the inspection and provide the results.

02080D Payment

Not Used

DocuSign Envelope ID: 330DEBD6-9A9E-4F34-BDCC-1AC1BAA701E9

02082 LEAD-RELATED CONSTRUCTION WORK

02082A General

02082A(1) Summary

This section includes specifications for lead-related construction work.

If lead-containing materials (LCM) will be disturbed in order to perform the work for this project, any disturbance of LCM must comply with the regulations. Apply the most stringent requirements if there is a conflict or overlap of requirements.

The results of the LCM survey conducted at the IERBYS building are contained in table 2 of the reports “Limited Asbestos and Lead-Containing Paint Survey Report, IERBYS Building, Burma Road, Alameda County, California,” dated December 2012, and “Limited Asbestos and Lead-Containing Paint Survey Report, IERBYS Building, Burma Road, Alameda County, California,” dated January 2014, prepared by Geocon Consultants. These reports provide information on the materials and substrates that were tested and the results.

Notify the Engineer immediately if any of the following occur:

1. Construction activities, other than those already described in the construction work plan, will or may disturb LCM identified in the LCM survey reports.
2. LCM, not previously identified in the LCM survey reports, are discovered during construction activities.

02082A(2) Definitions

Regulations: All Federal, State, and local codes, regulations, laws, and requirements.

Department: California Department of Transportation, unless with respect to the Standard Plans and Standard Specifications the context requires that Department mean BATA AREA TOLL AUTHORITY (BATA).

02082A(3) Submittals

Baseline Study and Clearance Inspection Report:

Submit baseline study, including analytical test results, before performing any lead-related construction work. Allow 3 days for review and authorization.

Submit clearance inspection report, including analytical test results, at the conclusion of all lead-related construction work.

Work Plans:

1. For construction work that will disturb LCM, submit a construction work plan that includes:
   - 1.1. Schedule, phasing, description, and location of activities that will disturb LCM. Include starting and completion dates.
   - 1.2. Summary of techniques to be used for complying with the regulations
   - 1.3. Methods for complying with the requirements in "Methods of compliance" under 8 CA Code of Regs § 1532.1. Include a written compliance program.
   - 1.4. Medical surveillance program under 8 CA Code of Regs § 1532.1, or certify that one is not required
   - 1.5. Respiratory protection program under 8 CA Code of Regs § 5144, or certify that one is not required
   - 1.6. Personnel monitoring procedures
   - 1.7. Documentation of required employee training, including required medical examinations, respirator fit test records, and certifications, for all individuals who will perform this work
   - 1.8. Standard procedures for protecting other workers, visitors, and any Department personnel at the jobsite, and for protection of spaces outside the work area from contamination

DocuSign Envelope ID: 330DEBD6-9A9E-4F34-BDCC-1AC1BAA701E9

1.9. Sampling protocol and procedures for performing the waste analysis
1.10. Qualifications of sampling personnel performing the waste analysis
1.11. Methods for any required protection of heating, ventilation, or air conditioning systems
1.12. Locations of required signage and hygiene facilities
1.13. Federal, State, and local agencies that require notification
1.14. Identification of responsible parties and emergency contacts
1.15. Names, addresses, phone numbers, and certifications for the analytical laboratory, waste transport firm, and disposal facility to be used
1.16. Worker roster, including name, address, and telephone number of each worker, who will be used for each phase or location of work
1.17. Contractor and worker qualifications
1.18. Name, address, and telephone of subcontractors who will perform this work
1.19. Final clearance inspection criteria

Submit the construction work plan to the Engineer before performing any lead-related construction work. Allow 5 days for review and authorization.

Correct any rejected construction work plan and resubmit a corrected plan within 5 days of notification by the Engineer, at which time a new review period of 5 days will begin.

Do not perform any lead-related construction work until the construction work plan has been authorized by the Engineer. The Engineer's review and authorization does not waive any contract requirements and does not relieve you from complying with the regulations.

2. For lead-containing construction debris that is determined to be a hazardous waste, submit a hazardous waste work plan that includes:
   2.1. Summary of methods and techniques to be used for complying with the regulations for handling, packaging, storing, transporting, and disposing of the hazardous waste.
   2.2. Contractor and worker qualifications.
   2.3. Analytical results from the waste analysis, including sample types, sample locations, chain of custody documentation, and name of analytical laboratory.
   2.4. Name, address, phone number, U.S. EPA identification number, and DTSC Registered Hazardous Waste Transporters registration number for the waste transport firm. Include method of transportation.
   2.5. Name, address, phone number, certification, U.S. EPA identification number, and class of the disposal facility to be used.
   2.6. Proposed job site location to be used for storing any hazardous waste containers.

   Submit the hazardous waste work plan to the Engineer before, packaging, storing, transporting, or disposing of any hazardous waste. Allow 3 days for review and authorization.

   Correct any rejected hazardous waste work plan and resubmit a corrected plan within 2 days of notification by the Engineer, at which time a new review period of 3 days will begin.

   Do not store, transport, or dispose of any hazardous waste until the hazardous waste work plan has been authorized by the Engineer. The Engineer's review and authorization does not waive any contract requirements and does not relieve you from complying with the regulations.

Worker Roster: An updated worker roster must be submitted and authorized before any worker, not on the current roster, performs any work. Allow 3 days for review and authorization.

Notifications: Submit copies of all notifications required by the regulations, except for employee notifications required by CA Code of Regs § 1532.1.

Analytical Test Results From Waste Analysis:

DocuSign Envelope ID: 330DEBD6-9A9E-4F34-BDCC-1AC1BAA701E9

Submit analytical test results from the waste analysis, including sample types, sample locations, chain of custody documentation, and name of analytical laboratory. Allow 2 days for review and authorization before:

1. Requesting that the Engineer obtain an EPA ID number, if required
2. Requesting the Engineer's signature on the waste analysis requested by the disposal facility, if required
3. Removing any of the debris from the job site

U.S. Environmental Protection Agency Identification Number Request: If required, submit a request for the U.S. EPA ID number.

Hazardous Waste Manifest: If required, submit a copy of the hazardous waste manifest for each shipment of hazardous waste.

Disposal Documentation: Submit documentation from disposal facility indicating proper disposal of all hazardous waste and nonhazardous lead-containing construction debris, within 5 days of transporting the debris from the job site.

At the conclusion of lead-related construction work, submit a statement that the work has been performed under the regulations and these special provisions.

Final Records:

Submit copies of final records indicating that the lead-related construction work has been performed under the regulations and these special provisions, including:

1. Records of any worker protection monitoring performed
2. Records required to be maintained by CA Code of Regs § 1532.1, subsection (n), including any:
   2.1. Exposure assessment
   2.2. Medical surveillance
   2.3. Medical removals
   2.4. "Objective data for exemption from requirement for initial monitoring"
3. Daily progress logs
4. List of workers who performed any lead-related construction work. Include name and any required certifications for each worker.
5. Permits and approvals obtained

Lead Awareness Training: Submit descriptive information for the contents of the lead awareness training.

02082A(4) Quality Control and Assurance

Follow all regulations, including:

Federal:

1. 29 CFR 1926.62

State:

1. 8 CA Code of Regs § 1532.1. Lead
2. 8 CA Code of Regs § 5144. Respiratory Protection
3. 17 CA Code of Regs
4. 22 CA Code of Regs, Division 4.5. Environmental Health Standards For The Management Of Hazardous Waste

Local:

1. Follow all local regulations applicable to the project location.

DocuSign Envelope ID: 330DEBD6-9A9E-4F34-BDCC-1AC1BAA701E9

Qualifications:

All work must be performed by competent persons trained, knowledgeable, qualified, and certified in lead-related construction work, including removal, demolition, handling, and disposal.

All analytical testing must be performed by an analytical laboratory certified by the California Department of Public Health (CDPH) Environmental Laboratory Accreditation Program.

The following items must be prepared, signed, and stamped by a lead professional currently certified by the CDPH Lead-Related Construction Program:

1. Baseline study
2. Construction work plan
3. Hazardous waste work plan, if required
4. Written compliance program
5. Clearance inspection report

Lead Awareness Training: You must provide 8 hours of lead awareness training, complying with the provisions in 8 CA Code of Regs § 1532.1. Lead and 8 CA Code of Regs § 5194. Hazard Communication, for a maximum of 4 Department personnel.

Preconstruction Meeting:

Before performing any lead-related construction work, attend a preconstruction meeting with your subcontractors and their competent person, key personnel, and field supervisors, who will be performing or overseeing the work. Be prepared to discuss the following topics and documents:

1. Submittals, including the authorized construction work plan and the authorized hazardous waste work plan, if required
2. “Field Quality Control” requirements specified below

The Engineer will determine the time and location of the meeting.

02082B Materials

Not Used

02082C Construction

02082C(1) General

Notify the Engineer at least 15 days before performing any lead-related construction work.

Perform lead-related construction work under the authorized construction work plan and the hazardous waste work plan, if required.

Only workers listed on the roster in the authorized work plans must be used to perform the work.

Minimize disturbance of LCM that are to remain in place.

02082C(2) Lead-Containing Construction Debris

Sample, analyze, handle, package, store, transport, and dispose of all lead-containing construction debris under the regulations. Apply the most stringent requirements if there is a conflict or overlap of requirements.

Waste Analysis: A waste analysis for lead must be performed on the lead-containing construction debris as required by the regulations and the disposal facility.

Nonhazardous Lead-containing Construction Debris: If the results of the waste analysis demonstrate that the lead-containing construction debris is a nonhazardous waste and the Engineer authorizes the results, dispose of the debris at an appropriately permitted disposal facility under section GC-51, Disposal of Materials of the Special Provisions.

DocuSign Envelope ID: 330DEBD6-9A9E-4F34-BDCC-1AC1BAA701E9

Hazardous Waste: If the results of the waste analysis demonstrate that the lead-containing construction debris is a hazardous waste, comply with the following additional requirements:

1. In addition to the labeling and marking requirements in 22 CA Code of Regs §§ 66262.31 and 66262.32, mark labels with:
   1.1. Date the hazardous waste was generated
   1.2. Composition and physical state of the hazardous waste
   1.3. Contractor or subcontractor name
   1.3. Contract number
   1.4. Name, address, and telephone number of the Engineer
2. If containers are stored within the job site limits, store them in a secured enclosure. Acceptable secure enclosures include a locked chain link fenced area or a lockable shipping container located within the job site limits.
3. After the Engineer authorizes the analytical test results, dispose of the waste at an appropriately permitted hazardous waste disposal facility, located in California, under the requirements of the disposal facility operator, within 30 days of authorization.
4. The Engineer will obtain the U.S. EPA ID number and will sign all manifests as the generator, within 2 days of receiving and authorizing the analytical test results and your request for the number.

02082C(3) Field Quality Control

Baseline Study:

Before performing any lead-related construction work prepare a baseline study consisting of analytical test results, to determine the initial lead concentrations on surfaces in the area where the work will be performed.

Soil and dust sampling and analysis must comply with the following requirements:

Material	Sampling	Analysis
Soil	ASTM E1727	ASTM E1613, EPA Method 6010B, EPA Method 6020, or EPA Method 7420
Dust (Wipe)	ASTM E1728 or NIOSH 9100	ASTM E1613, NIOSH 7082, EPA Method 6010B, or EPA Method 7420
Dust (Vacuum)	ASTM D7144 or ASTM D5438	ASTM E1613, NIOSH 7082, EPA Method 6010B, or EPA Method 7420

Clearance Inspection Report:

At the conclusion of lead-related construction work prepare a clearance inspection report, consisting of analytical test results, to determine the final conditions in the area where the lead-related construction work was performed.

You will be required to take the same number and type of samples and at the same locations, that were taken in the baseline study.

DocuSign Envelope ID: 330DEBD6-9A9E-4F34-BDCC-1AC1BAA701E9

Soil and dust sampling and analysis must comply with the requirements of "Baseline Study" specified above.

The lead concentrations of the samples taken for the clearance inspection report must be less than or equal to those in the baseline study.

Department Inspections: At the conclusion of lead-related construction work, the Department may perform a clearance inspection. The inspection will include 1) a visual inspection, and 2) sampling and analysis of soil samples, or dust samples, or a combination of both soil and dust samples, if applicable.

02082D Payment

Not Used

DocuSign Envelope ID: 330DEBD6-9A9E-4F34-BDCC-1AC1BAA701E9

SECTION 99-024100

SITE DEMOLITION

PART 1 - GENERAL

1.1 SECTION INCLUDES

A. Permits.
B. Site conditions.
C. Materials, equipment, and facilities.
D. Preservation of reference markers.
E. Demolition.
F. Removal.
G. Salvage.
H. Disposal of removed materials and debris.

1.2 RELATED SECTIONS

A. Temporary facilities, such as fences, barricades, warning lights, and other temporary safety measures, are specified in GC-35 Temporary Construction Facilities and Utilities.
B. Dust control is specified in SC-40 Dust Control.
C. Selective demolition and removal for renovation of existing buildings, structures, and facilities are specified in Section 99-024119, Selective Structure Demolition.
D. Removal of vegetation and trees is specified in section SC-44 Clearing and Grubbing.
E. Demolition related to the Main Bridge Yard Building is specified in section 99-024119 Selective Demolition.

1.3 REFERENCES

A. American National Standards Institute (ANSI):
   1. ANSI A10.6 Safety Requirements for Demolition Operations
B. State of California, Department of Transportation (Caltrans), Standard Specifications, Section 15, Existing Highway Facilities.

1.4 REGULATORY REQUIREMENTS

A. In addition to the foregoing referenced standards, the regulatory requirements that govern the work of this Section include the following governing codes:
   1. California Code of Regulations (CCR), Title 8, Chapter 4, Subchapter 4 – Construction Safety Orders.
   2. California Code of Regulations (CCR), Title 24, Part 2, California Building Code, Chapter 33, “Site Work, Demolition and Construction.”

1.5 DESCRIPTION

A. Demolition as follows:
   1. Buildings and structure foundations, footings, and foundation systems shall be completely removed.
   2. Utility services to facilities to be removed or demolished shall be disconnected, cut, and capped.

DocuSign Envelope ID: 330DEBD6-9A9E-4F34-BDCC-1AC1BAA701E9

B. Removal of at-grade structures, such as existing pavements, curbs, gutters, sidewalks, and designated utility structures.

1.6 PERMITS

A. The Contractor shall obtain all special permits and licenses and give all notices required for performance and completion of the demolition and removal work, hauling, and disposal of debris.

1.7 SUBMITTALS

A. General: Refer to Section GC-43 Submittal of Shop Drawings, Product Data and Samples, for submittal requirements and procedures.

B. Demolition Plan: Submit a comprehensive demolition plan, describing the proposed sequence, methods, and equipment for demolition, removal, and disposal of structure(s); include salvage if required. Do not proceed with demolition until the Engineer has given written approval of the demolition plan.

1. Shop Drawings: Include drawings in plan of all structures to be demolished. Indicate stages or phases of the demolition work.

C. Permits: Submit copies of demolition, hauling, and debris disposal permits and notices for record purposes. Include description of proposed haul routes.

D. Utility Severance Certificates: Provide certificates, issued by the utility owners, of severance of utility services for record purposes.

E. Private Property Owner's Release: If material demolished and removed from the site will be deposited on private property, submit two copies of written releases not more than 15 days before the start of work. Releases shall absolve the District from responsibility in connection with the depositing of material on private property, and shall be signed by the owners of such property on which the material will be deposited.

F. Record Documents: Provide copies of all approved submittals, specified herein, for record purposes in accordance with the requirements of Section SC-22 Project Close-Out Requirements - Record Drawings.

1.8 SITE CONDITIONS

A. Protection of Persons and Property:

1. Install chain link fencing around the area of demolition work as specified in Section 32 31 13, Chain Link Fences and Gates. Comply with applicable requirements of Section GC-35 Temporary Construction Facilities and Utilities.
2. Erect and maintain temporary bracing, shoring, lights, barricades, signs, and other measures as necessary to protect the public, workers, and adjoining property from damage from demolition work, all in accordance with applicable codes and regulations.
3. Open depressions and excavations occurring as part of this work shall be barricaded and posted with warning lights when accessible through adjacent property or through public access. Operate warning lights during hours from dusk to dawn each day and as otherwise required.
4. Protect utilities, pavements, and facilities from damage caused by settlement, lateral movement, undermining, washout, and other hazards created by demolition operations.

B. Protection of Utilities:

1. Protect active sewer, water, gas, electric, and other utilities; and drainage and irrigation lines indicated or, when not indicated, found or otherwise made known to the Contractor

DocuSign Envelope ID: 330DEBD6-9A9E-4F34-BDCC-1AC1BAA701E9

before or during demolition work. If utility is damaged, immediately notify the utility owner for corrective action.

2. Arrange with and perform work required by utility companies and municipal departments for discontinuance or interruption of utility services due to demolition work.

C. Noise and Dust Abatement: Comply with requirements specified in Section GC-35 Temporary Construction Facilities and Utilities, and the following:

1. Provide continuous noise and dust abatement as required to prevent disturbance and nuisance to the public and workers and to the occupants of adjacent premises and surrounding areas. Dampen or cover areas affected by demolition operations as necessary to prevent dust nuisance.
2. When a certain level of noise is unavoidable because of the nature of the work or equipment involved, and such noise is objectionable to the occupants of adjacent premises, make arrangements with the jurisdictional authorities to perform such work or operate such equipment at the most appropriate time periods of the day.

D. Removal of site building equipment, materials and fixtures.

1. The two small buildings contained in the site have hazardous materials. Please reference section 99-024119 Selective Demo for Demolition related to the Main Bridge Yard Building. Please reference section 02080 Asbestos-Related Work and section 02082 Lead-Related Work.
   a. Strictly follow procedures and regulations applicable to hazardous materials.
   b. Do not remove hazardous materials without Owner authorization.
   c. Give special consideration to handling of material that may contain asbestos. Direction relating to hazardous materials will be given by the Owner.
   d. Architect will have no responsibility for detection, evaluation, or removal of asbestos materials, or for construction contract administration of removal process.
   e. Asbestos:
      i. Existing corrugated siding and roofing are asbestos bearing materials.
      ii. Do not drill or cut into asbestos bearing materials without appropriate safety gear.
      iii. Do not stage painting or other operations from corrugated roofing.
   f. Lead Paint:
      i. Two structures on the exterior site to be demolished, date prior to 1976 and it is assumed lead-based paint has been used on interior and exterior surfaces.
      ii. Do not abrade, sand, or scuff existing painted surfaces.
      iii. Powerwash surfaces to prepare for repainting.
      iv. Special attention is required for repair of rusted surfaces.

E. Unknown Conditions:

1. The Contract Drawings and related documents may not represent all surface conditions at the site and adjoining areas. The known surface conditions are as indicated, and shall be compared with actual conditions before commencement of work.
2. Existing utilities and drainage systems below grade are located from existing documents and from surface facilities such as manholes, valve boxes, area drains, and other such surface fixtures.
3. If existing active services encountered are not indicated or otherwise made known to the Contractor and interfere with the permanent facilities under construction, notify the Engineer in writing, requesting instructions on their disposition. Take immediate steps to

DocuSign Envelope ID: 330DEBD6-9A9E-4F34-BDCC-1AC1BAA701E9

ensure that the service provided is not interrupted, and do not proceed with the work until written instructions are received from the Engineer.

4. Thickness of existing pavements are from previous construction documents, and do not imply the actual depth or thickness of the total pavement or base material, where it occurs. Remove pavement of whatever thickness as required.

PART 2 - PRODUCTS

2.1 MATERIALS, EQUIPMENT, AND FACILITIES

A. The Contractor shall furnish all materials, tools, equipment, devices, appurtenances, facilities, and services as required for performing the demolition and removal work.

B. Materials used for backfill shall conform to the requirements for backfill of Section 99-310000, Earthwork.

PART 3 - EXECUTION

3.1 PRESERVATION OF REFERENCE MARKERS

A. Record the locations and designation of survey markers and monuments prior to their removal. Provide three reference points for each survey marker and monument removed, established by a licensed civil engineer or land surveyor currently registered in the State of California.

B. Store removed markers and monuments during demolition work, and replace them upon completion of the work. Re-establish survey markers and monuments in conformance with the recorded reference points. Forward to the Engineer a letter verifying re-establishment of survey markers and monuments, signed by a licensed civil engineer or land surveyor currently registered in the State of California.

3.2 DEMOLITION

A. Perform demolition in accordance with the approved Demolition Plan. Perform demolition work in accordance with ANSI A10.6 and the California Code of Regulations, Title 8 and Title 24, as applicable.

B. Cap or plug sanitary sewer in accordance with the utility owner's standard details and instructions. Cap and plug pipe and other conduits abandoned due to demolition, with approved type caps and plugs as required by the utility owners.

C. Backfill and compact depressions caused by excavations, demolition, and removal in accordance with applicable requirements of Section 99-310000,Earthwork.

3.3 REMOVAL

A. Remove existing pavements, structures, and site improvements that interfere with new construction, where demolition is not indicated. Coordinate as required with the work of Section 99-311100, Clearing and Grubbing.

B. Remove walls and masonry construction to a minimum depth of 2 feet below existing ground level in areas where such items do not interfere with new construction.

C. Slabs may be broken for drainage and left in place where they are below grade and are not detrimental to the structural integrity of the fill or structure to be placed above, as determined by the Engineer.

DocuSign Envelope ID: 330DEBD6-9A9E-4F34-BDCC-1AC1BAA701E9

3.4 OBLITERATE

A. Obliterate existing pavement as described on plans in accordance with State of California, Department of Transportation (Caltrans), Standard Specifications, Section 15, Existing Highway Facilities.

3.5 SALVAGE

A. Items or materials to be salvaged shall be as indicated on the Contract Drawings and in the Contract Specifications.

B. Protect metallic coatings on salvaged items. Remove adhering concrete from salvaged items.

C. Repair, or replace with new material, salvaged material damaged or destroyed due to Contractor's negligence, as determined by the Engineer.

3.6 DISPOSAL OF REMOVED MATERIALS AND DEBRIS

A. Dispose of removed materials, waste, trash, and debris in a safe, acceptable manner, in accordance with applicable laws and ordinances and as prescribed by authorities having jurisdiction.

B. Burying of trash and debris on the site will not be permitted. Burning of trash and debris at the site will not be permitted.

C. Remove trash and debris from the site at frequent intervals so that their presence will not delay the progress of the work or cause hazardous conditions for workers and the public.

D. Removed materials, trash, and debris shall become the property of the Contractor and shall be removed from the District's property and disposed of in a legal manner. Location of disposal site and length of haul shall be the Contractor's responsibility.

3.7 CLEANUP

A. Provide a clean and orderly site at all times in accordance with Section 99-017414, Cleaning.

END OF SECTION

DocuSign Envelope ID: 330DEBD6-9A9E-4F34-BDCC-1AC1BAA701E9

SECTION 99-024119

SELECTIVE DEMOLITION

PART 1 - GENERAL

1.1 SUMMARY

A. Section Includes:
   1. Removal of designated building equipment, materials and fixtures.
   2. Removal of existing construction to accommodate new construction.
   3. Disconnecting and capping of identified utilities.

1.2 SUBMITTALS

A. General: Submit in accordance with Part 7, General Conditions, GC-43, "Submittal of Shop Drawings, Product Data and Samples," of Special Provisions.

B. Schedules: Submit schedule showing time and detailed sequence of demolition, removal of materials, arranged coordination for shut-off, capping, and continuation of utility services.

C. Closeout Submittals:
   1. Project Record Documents:
      a. Submit under provisions of Part 6, Special Conditions, SC-22, "Project Close-Out Requirements – Record Drawings" of Special Provisions.
      b. Record actual locations of capped utilities.

1.3 QUALITY ASSURANCE

A. Sub-Contractor Qualifications: Sub-Contractor specializing in demolition work with minimum of 3 years documented experience.

B. Regulatory Requirements:
   1. Comply with applicable codes, ordinances, rules, regulations, and laws of local, municipal, state and federal authorities having jurisdiction.
   2. Obtain and pay for necessary permits and notices; post where required.
   3. Comply with safety requirements of local fire department.

C. Notify affected utility companies before starting work and comply with their requirements.

D. Do not close or obstruct egress width of fire exits or access.

E. Do not disable or disrupt building fire or life safety systems without 72 hours prior written notice to Owner.

1.4 PRE-DEMOLITION CONFERENCE

A. Conduct pre-demolition conference to discuss following:
   1. Present draft of demolition schedule for review.
   2. Coordinate phasing requirements.
   3. Identify items to be protected and preserved before proceeding with work.
   4. Obtain agreement from Owner on day-to-day scheduling requirements and restrictions to avoid disruption of Owner operations resulting from demolition work, dirt, or noise.
   5. Discuss environmental requirements and procedures.
      a. Identification of asbestos bearing materials, lead paint, and other hazardous materials. (Refer to "Limited Asbestos and Lead - Containing Paint Survey Report," reports dated December 2012 and January 2014.)
      b. Handling, transportation, and disposal of contaminated waste in accordance with Division II, "Hazardous Materials" 0280-1 of Special Provisions.
      c. Historical Preservation Reports (ref. "Finding Of No Adverse Effect Report," dated November 2012 and April 2014).

DocuSign Envelope ID: 330DEBD6-9A9E-4F34-BDCC-1AC1BAA701E9

1.5 PROJECT CONDITIONS

A. Occupancy:
   1. Owner will vacate demolition area prior to start of demolition work.
   2. Owner will continuously occupy areas of building immediately adjacent to selective demolition areas.
   3. Conduct selective demolition work in manner that will minimize need for disruption of Owner's normal operations.
   4. Provide minimum of 72 hours advanced notice to Owner of demolition activities which will severely impact Owner's normal operations.
   5. Maintain free and safe passage to and from Owner occupied areas.

B. Existing Conditions: Owner assumes no responsibility for actual condition of areas to be demolished.

C. Hazardous Materials:
   1. Owner has made provisions for a hazardous material report. (Refer to "Limited Asbestos and Lead - Containing Paint Survey Report," reports dated December 2012 and January 2014.). Inform Owner immediately upon discovery of asbestos products, radioactive materials, radon gas, toxic wastes, or other similar hazardous materials that will interfere with new work.
   2. Strictly follow procedures and regulations applicable to hazardous materials.
   3. Do not remove hazardous materials without Owner authorization.
   4. Give special consideration to handling of material that may contain asbestos. Direction relating to hazardous materials will be given by the Owner.
   5. Architect will have no responsibility for detection, evaluation, or removal of asbestos materials, or for construction contract administration of removal process.
   6. Asbestos:
      a. Existing corrugated siding and roofing are asbestos bearing materials.
      b. Do not drill or cut into asbestos bearing materials without appropriate safety gear.
      c. Do not stage painting or other operations from corrugated roofing.
   7. Lead Paint:
      a. Building dates prior to 1976 and it is assumed lead-based paint has been used on interior and exterior surfaces.
      b. Do not abrade, sand, or scuff existing painted surfaces.
      c. Powerwash surfaces to prepare for repainting.
      d. Special attention is required for repair of rusted surfaces.

D. Explosives: Not permitted.

E. Traffic and Passageways:
   1. Maintain accessibility for fire fighting apparatus.
   2. Conduct demolition operations and debris removal to avoid interference with use of roads, streets, walks, and adjacent occupied facilities.
   3. Obtain written permission from authorities having jurisdiction prior to closing or obstructing streets, walks, or other adjacent occupied facilities.
   4. Provide alternate routes when closing or obstructing traffic ways when required by governing authorities.
   5. Ensure safe passage of persons around area of demolition. Provide and maintain temporary covered passageways; comply with requirements of governing authorities.

F. Protection:
   1. Perform Work in manner to eliminate hazards to persons or property and avoid interference with adjacent areas, utilities and structures.
   2. Provide and maintain temporary barricades, fences, warning signs, guardrails, warning lights, weatherproof and dust partitions, and other similar provisions as necessary or required by applicable regulatory authorities for protection of building occupants and workers.
   3. Provide and maintain fire extinguishers; comply with requirements of governing authorities.

DocuSign Envelope ID: 330DEBD6-9A9E-4F34-BDCC-1AC1BAA701E9

4. Maintain existing utilities which are to remain in service and protect from damage during demolition operations.
5. Do not interrupt existing utilities serving occupied facilities, except when authorized by Owner in writing. Provide temporary services during interruptions to existing utilities.
6. Coordinate in advance with Owner mechanical, electrical, and plumbing shutdowns.
7. Protect existing work indicated to remain from damage.
8. Protect existing floors with suitable coverings when necessary.
9. Construct temporary dustproof partitions and seal return air plenums where necessary to areas where noisy or dirt and dust operations are being performed.
10. Provide temporary weather protection for areas where existing exterior elements were removed to ensure no water leakage or damage occurs to structure or interior areas of existing building.
11. Fire sprinkler system shall remain active.

PART 2 - PRODUCTS

NOT USED

PART 3 - EXECUTION

3.1 EXAMINATION

A. Verify demolition areas are unoccupied.

3.2 PREPARATION

A. Provide, erect, and maintain temporary barriers and security devices to prevent unauthorized use or entry of building.

B. Protect existing structures and materials which are not being demolished.

C. Provide temporary support for above ceiling utilities prior to demolition of ceiling grid.

D. Utilities:
   1. Mark and identify location of utilities to be disconnected.
   2. Notify affected utility company in advance of date and time when service needs to be disconnected.
   3. Disconnect and cap utility services; comply with requirements of governing authorities.
   4. Do not commence demolition operations until associated disconnections have been completed.

E. Materials Retained by Contractor:
   1. Items of salvageable value not indicated as Owner salvaged or scheduled for reinstallation may be removed as work progresses.
   2. Salvaged items must be removed from site as they are removed. Storage or sale of salvaged items on site will not be permitted.

3.3 DEMOLITION

A. General:
   1. Reference Caltrans Standard Specification Section 15-3 “Concrete Removal”.
   2. Conduct demolition to minimize interference with adjacent occupied building areas.
   3. Cease demolition operations immediately if adjacent structures appear to be in danger. Conduct safety operations as necessary. Do not resume demolition operations until directed.
   4. Conduct operations to maintain egress and access at all times.
   5. Sprinkle debris with water to minimize dust. Provide hoses and water connections as necessary.
   6. Do not cause flooding or contaminated runoff.
   7. Reference Division II, Hazardous Materials, Specification Section 02080-1 of these Special Provisions.

DocuSign Envelope ID: 330DEBD6-9A9E-4F34-BDCC-1AC1BAA701E9

B. Demolish existing construction as indicated in orderly and careful manner to accommodate new work. Protect supporting structural members. Remove demolished materials from site daily and legally dispose of such materials. Recycle removed materials to greatest extent possible.

C. Perform demolition in accordance with governing authorities.

D. Remove and immediately dispose of contaminated or vermin infested materials when encountered.

E. Report to Owner unanticipated mechanical, electrical, or structural elements which conflict with intended function or design when encountered. Submit report in writing. Rearrange demolition schedule as necessary to continue overall project progress without delay.

F. Do not burn or bury materials or debris on site. Leave structures and site in clean condition.

3.4 ADJUSTING

A. Repair demolition performed in excess of that required.

B. Return structures and surfaces to remain to conditions existing prior to commencement of selective demolition Work.

C. Remove existing anchor bolts flush to top of slab.

3.5 CLEANING

A. General: Refer to Part 7, General Conditions, GC-53 "Cleanup," and Division II, “Hazardous Materials” 0280-1 of Special Provisions.

B. Broom clean demolition areas of dust, dirt, and debris caused by demolition operations. Return adjacent areas to condition existing prior to start of work.

C. Remove temporary work and protection when no longer needed.

END OF SECTION

DocuSign Envelope ID: 330DEBD6-9A9E-4F34-BDCC-1AC1BAA701E9

SECTION 99-020715

REMOVING PORTIONS OF EXISTING FACILITIES – SEISMIC RETROFIT

PART1 - GENERAL

1.1 SUMMARY

A. Scope: This work consists of removing portions of the existing facilities, including removal of existing work to gain access to or for new work for the seismic retrofit.

B. The work of this section will disturb the existing paint system which contains lead paint. Lead paint abatement limits are indicated on the plans.

PART 2 - PRODUCT

Not Used

PART - EXECUTION

3.1 PREPARATION

A. The limits of removal must be located and identified. Items to be removed and the interface of items to be removed and items to remain intact must be identified and marked.

3.2 REMOVAL

A. Removal must be to the limits shown. Removal must be done carefully to minimize damage to the portions to remain. Remaining portions that are damaged by the Contractor's operation must be restored to original condition at the Contractor's expense.

B. Existing apparatuses, devices, or accessories which would be functionally impaired by the seismic retrofit must be moved, brought out to new surfaces, or provided with new access covers, as necessary to restore apparatuses, devices, or accessories to their original usefulness.

C. Utilities and existing facilities must be protected in compliance with section 99-024119 Selective Demolition

3.3 DISPOSAL

A. Materials that are to be removed contain lead paint and must comply with section 02082 Lead-Related Construction Work.

END OF SECTION

DocuSign Envelope ID: 330DEBD6-9A9E-4F34-BDCC-1AC1BAA701E9

SECTION 99-030515

PORTLAND CEMENT CONCRETE

PART 1 – GENERAL

1.1 SECTION INCLUDES

A. Portland cement.
B. Aggregates.
C. Drying shrinkage of concrete.
D. Concrete admixtures and cementitious materials.
E. Tests and analysis of materials.
F. Mix designs.
G. Batching, mixing, and transporting.
H. Inspection and testing.
I. Mortar.

1.2 RELATED SECTIONS

A. GC-43, Submittal of Shop Drawings, Product Data and Samples.
B. Section SC-33 Quality Assurance Program
C. Section 99-033000, Cast-In-Place Concrete.

1.3 CLASSES OF CONCRETE

A. The structural concrete class shown on the Contract Drawings indicates the minimum 28-day compressive strength, in pounds per square inch as determined by California Test 521 (Example: Structural Concrete, Class 4000, Bridge indicates bridge concrete with a 28-day compressive strength of 4,000 pounds per square inch).
B. Minor concrete shall contain not less than 550 pounds of cementitious material per cubic yard unless otherwise specified in these Technical Specifications.
C. Unless otherwise designated on the Contract Drawings or specified in these Technical Specifications, the amount of cementitious material used per cubic yard of concrete in structures or portions of structures shall conform to the following:

Use	Cementitious Material Content (Pounds/CY)
Concrete designated by compressive strength:	
Deck slabs and slab spans of bridges	675 min., 800 max.
Top decks of box culverts	675 min., 800 max.
Other portions of structures	590 min., 800 max.
Concrete not designated by compressive strength:	
Deck slabs and slab spans of bridges	675 min.
Top decks of box culverts	675 min.
Prestressed members	675 min.
Seal courses	675 min.
Other portions of structures	590 min.
Concrete for precast members	590 min., 925 max.

DocuSign Envelope ID: 330DEBD6-9A9E-4F34-BDCC-1AC1BAA701E9

D. Whenever the 28-day compressive strength shown on the Contract Drawings is greater than 3,000 pounds per square inch, the concrete shall be designated by compressive strength. If the Contract Drawings show a 28-day compressive strength that is 4,000 pounds per square inch or greater, an additional 14 days will be allowed to obtain the specified strength. The 28-day compressive strengths shown on the Contract Drawings that are 3,000 pounds per square inch or less are shown for design information only and are not a requirement for acceptance of the concrete.

E. Concrete designated by compressive strength shall be proportioned such that the concrete will attain the strength shown on the Contract Drawings or specified in these Technical Specifications.

F. Before using concrete for which the mix proportions have been determined by the Contractor, or in advance of revising those mix proportions, the Contractor shall submit a copy of the mix design in writing to the Engineer.

G. Compliance with cementitious material content requirements will be verified in conformance with procedures described in California Test 518 for cement content. For testing purposes, supplementary cementitious material shall be considered to be cement. Batch proportions shall be adjusted as necessary to produce concrete having the specified cementitious material content.

H. If any concrete has a cementitious material, portland cement, or supplementary cementitious material content that is less than the minimum required, the concrete shall be removed.

I. The requirements of the preceding paragraph shall not apply to minor concrete or commercial quality concrete.

1.4 DEFINITIONS

A. The word "concrete" indicates normal weight aggregate concrete, having a minimum unit weight of 145 pounds per cubic foot (without reinforcement) at 28 days.

B. The term "lightweight concrete" indicates lightweight structural concrete which has a maximum unit weight of 115 pounds per cubic foot at 28 days.

C. The term "fill concrete" indicates a concrete containing sufficient cementitious material to develop a 28-day compressive strength of 2500 psi.

D. The term "lean concrete" indicates a concrete containing the equivalent of two 94-pound sacks of cementitious material per cubic yard.

E. The term “controlled density fill” indicates a flowable mixture of aggregate and cementitious materials containing sufficient cementitious material to develop a 28-day compressive strength of 50 to150 psi.

F. The term "mass concrete" indicates any volume of concrete with dimensions large enough to require that measures be taken to cope with the generation of heat from hydration of the cement and attendant volume change in order to minimize shrinkage and cracking.

G. Except for the foregoing definitions, the words and terms used in these Technical Specifications conform to the definitions given in ACI 116R.

H. The term ICC indicates the International Code Council.

I. The term AMRL indicates the AASHTO Materials Reference Library.

1.5 REFERENCES

A. American Concrete Institute (ACI):

1.	ACI 116R	Cement and Concrete Terminology
2.	ACI 211.1	Practice for Selecting Proportions for Normal, Heavyweight, and Mass Concrete
3.	ACI 211.2	Practice for Selecting Proportions for Structural Lightweight Concrete

DocuSign Envelope ID: 330DEBD6-9A9E-4F34-BDCC-1AC1BAA701E9

4.	ACI 301	Specifications for Structural Concrete
5.	ACI 304R	Guide for Measuring, Mixing, Transporting, and Placing Concrete
6.	ACI 304.2R	Placing Concrete by Pumping Methods
7.	ACI 305R	Hot Weather Concreting
8.	ACI 306.1	Specification for Cold Weather Concreting
9.	ACI 318/318R	Building Code Requirements for Structural Concrete and Commentary

B. American Society for Testing and Materials (ASTM):

1.	ASTM C31/C31M	Standard Practice for Making and Curing Concrete Test Specimens in the Field
2.	ASTM C33	Specification for Concrete Aggregates
3.	ASTM C39/C39M	Test Method for Compressive Strength of Cylindrical Concrete Specimens
4.	ASTM C40	Test Method for Organic Impurities in Fine Aggregates for Concrete
5.	ASTM C42/C42M	Test Method for Obtaining and Testing Drilled Cores and Sawed Beams of Concrete
6.	ASTM C88	Test Method for Soundness of Aggregates by Use of Sodium Sulfate or Magnesium Sulfate
7.	ASTM C94	Specification for Ready-Mixed Concrete
8.	ASTM C114	Test Methods for Chemical Analysis of Hydraulic Cement
9.	ASTM C131	Test Method for Resistance to Degradation of Small-Size Coarse Aggregate by Abrasion and Impact in the Los Angeles Machine
10.	ASTM C136	Test Method for Sieve Analysis of Fine and Coarse Aggregates
11.	ASTM C143/C143M	Test Method for Slump of Hydraulic Cement Concrete
12.	ASTM C150	Specification for Portland Cement
13.	ASTM C172	Standard Practice for Sampling Freshly Mixed Concrete
14.	ASTM C494/C494M	Specification for Chemical Admixtures for Concrete
15.	ASTM C979	Specification for Pigments for Integrally Colored Concrete
16.	ASTM C1017/C1017M	Specification for Chemical Admixtures for Use in Producing Flowing Concrete
17.	ASTM E329	Specification for Agencies Engaged in the Testing and/or Inspection of Materials Used in Construction
18.	ASTM C109/C109M	Test Method for Compressive Strength of Hydraulic Cement Mortars (Using 2-in. or [50-mm] Cube Specimens)
19.	ASTM C138/C138M	Test Method for Density (Unit Weight), Yield, and Air Content (Gravimetric) of Concrete
20.	ASTM C191	Test Methods for Time of Setting of Hydraulic Cement by Vicat Needle
21.	ASTM C231	Test Method for Air Content of Freshly Mixed Concrete by the Pressure Method
22.	ASTM C260	Specification for Air-Entraining Admixtures for Concrete
23.	ASTM C266	Test Method for Time of Setting of Hydraulic-Cement Paste by Gillmore Needles
24.	ASTM C311	Test Methods for Sampling and Testing Fly Ash or Natural Pozzolans for Use in Portland-Cement Concrete
25.	ASTM C827	Test Method for Change in Height at Early Ages of Cylindrical

DocuSign Envelope ID: 330DEBD6-9A9E-4F34-BDCC-1AC1BAA701E9

		Specimens of Cementitious Mixtures
26.	ASTM C1107/C1107M	Specification for Packaged Dry, Hydraulic-Cement Grout (Nonshrink)
27.	ASTM C1567	Test Method for Determining the Potential Alkali-Silica Reactivity of Combinations of Cementitious Materials and Aggregate (Accelerated Mortar-Bar Method)
28.	ASTM D75/D75M	Practice for Sampling Aggregates
29.	ASTM D979	Practice for Sampling Bituminous Paving Mixtures
30.	ASTM D3744	Test Method for Aggregate Durability Index

C. American Association of State Highway and Transportation Officials (AASHTO):

1.	AASHTO M240	Specification for Blended Hydraulic Cement
2.	AASHTO M295	Specification for Coal Fly Ash and Raw or Calcined Natural Pozzolan for Use in Concrete
3.	AASHTO M302	Specification for Ground Granulated Blast-Furnace Slag for Use in Concrete and Mortars
4.	AASHTO M307	Specification for Silica Fume Used in Cementitious Mixtures
5.	AASHTO R18	Recommended Practice for Establishing and Implementing a Quality Management System for Construction Materials Testing Laboratories
6.	AASHTO T105	Method of Test for Chemical Analysis of Hydraulic Cement

D. State of California Department of Transportation (Caltrans):

1.	California Test 125	Sampling Highway Materials and Products Used in the Roadway Structural Sections (Equivalent to ASTM D75/D75M and ASTM D979)
2.	California Test 211	Abrasion of Coarse Aggregate by Use of the Los Angeles Rattler Machine (Equivalent to ASTM C131)
3.	California Test 213	Organic Impurities in Concrete Sand (Equivalent to ASTM C40)
4.	California Test 214	Soundness of Aggregates by Use of Sodium Sulfate (Equivalent to ASTM C88)
5.	California Test 217	Sand Equivalent (No ASTM Equivalent)
6.	California Test 227	Evaluating Cleanness of Coarse Aggregate (No ASTM Equivalent)
7.	California Test 229	Durability Index (Equivalent to ASTM D3744)
8.	California Test 415	Determining the Chloride Content in Organic Additives for Portland Cement Concrete (No ASTM Equivalent)
9.	California Test 417	Soils and Waters for Sulfate Content (No ASTM Equivalent)
10.	California Test 422	Testing Soils and Waters for Chloride Content (No ASTM Equivalent)
11.	California Test 504	Determining Air Content of Freshly Mixed Concrete by the Pressure Method (Equivalent to ASTM C231)
12.	California Test 515	Relative Mortar Strength of Portland Cement Concrete Sand (No ASTM Equivalent)
13.	California Test 518	Unit Weight of Fresh Concrete (Equivalent to ASTM C138/C138M)
14.	California Test 521	Compressive Strength of Molded Concrete Cylinders (Equivalent to ASTM C39/C39M)
15.	California Test 529	Proportions of Coarse Aggregate in Fresh Concrete (No ASTM Equivalent)

DocuSign Envelope ID: 330DEBD6-9A9E-4F34-BDCC-1AC1BAA701E9

16. California Test 533 — Test for Ball Penetration in Fresh Portland Cement Concrete (Equivalent to ASTM C143/C143M)
17. California Test 539 — Sampling Fresh Concrete (Equivalent to ASTM C172)
18. California Test 540 — Making, Handling and Storing Concrete Compressive Test Specimens in The Field (Equivalent to ASTM C31/C31M)
19. California Test 549 — Prequalification of Concrete Aggregate (No ASTM Equivalent)

E. State of California Department of Transportation (Caltrans), Standard Specifications (2010):
1. Section 4 — Scope of Work
2. Section 6 — Control of Materials
3. Section 9 — Payment

1.6 DESCRIPTION

A. Portland cement concrete shall be composed of cementitious material, fine aggregate, coarse aggregate, and water, with or without admixtures as approved by the Engineer, proportioned and mixed as specified herein.

B. Determine the mix proportions for concrete in conformance with these Technical Specifications.

1.7 SUBMITTALS

A. General: Submittals for portland cement concrete shall be made in accordance with the provisions in Section GC-43, "Submittal of Shop Drawings, Product Data and Samples," of the General Conditions and these Technical Specifications.

1. Submit the following number of Shop Drawings, Calculations, Product Data, and the like.

		Total Number of Submittals		Submittals Required for Structural Engineer of Record Review	
	Size	***Originals***	***Copies***	***Originals***	***Copies***
Concrete Mix Designs					
Mix Designs	8½x11	N/A	3	N/A	2
Product Data	8½x11	N/A	3	N/A	2
Certificates of Compliance	8½x11	N/A	3	N/A	2
Laboratory Test Results	8½x11	N/A	3	N/A	2
Samples	Varies	1	N/A	1	N/A
Concrete Quality Control Plan	8½x11	N/A	3	N/A	2
Qualifications of Professional Testing Laboratory	8½x11	N/A	3	N/A	2
Thermal Control Plan	8½x11	N/A	3	N/A	2

2. Submittals shall be made to the Engineer for review by the Engineer and the Structural Engineer of Record, in accordance with the table above. Do not order materials, begin fabrication, or begin construction of work related to the submittal until the submittal has been reviewed and stamped by the Structural Engineer of Record with a Shop Drawing stamp marked "No Exceptions Taken" or "Make Corrections Noted" and returned to the Contractor by the Engineer.
3. Submit the name, address, and telephone number of the laboratory, agency, mill, or ready-mix plant which the Contractor intends to engage to design the concrete mixes.
4. Submit the name and qualifications of the proposed concrete technologist.

B. Mix Designs:

DocuSign Envelope ID: 330DEBD6-9A9E-4F34-BDCC-1AC1BAA701E9

1. The Contractor's approved professional testing laboratory shall provide concrete mix designs for each type of concrete on the job. The laboratory shall meet applicable requirements of ASTM E329 and shall be approved by the Engineer. Each mix design shall be verified by trial batch tests or laboratory test reports and certified by a principal of the laboratory who is a registered civil engineer in the State of California. Qualifications of the laboratory and registered civil engineer shall be submitted with the mix designs. Laboratory test reports, in order to be acceptable, shall indicate that not less than 90 percent of at least 20 consecutive 28-day tests exceed the specified strength, and none of said tests are less than 95 percent of specified strength.
2. Submit mix designs for each class of concrete on the Project and show names and brands of all materials, proportions, slump, strength, gradation of coarse and fine aggregates, admixtures, amount of water and the like. The proposed location where the mix will be used on the Project shall be clearly indicated at the top of all proposed mix design sheets.
3. Each mix design submittal, for concrete designated by strength, shall be accompanied by certified test data or trial batch test reports in accordance with the requirements of the Technical Specifications.

C. Product Data: Submit manufacturer's catalog sheets including instructions for use and description of application on each of the following materials:
1. Admixtures
2. Chemical hardener

D. Samples: Submit samples of materials for testing as specified in these Technical Specifications, and as otherwise directed by the Engineer, including the names, sources, and descriptions of materials.

E. Certificates of Compliance:
1. Submit a Certificate of Compliance for each type of aggregate, cement and admixture to be used in each class of concrete or a Certificate of Compliance for each class of concrete.
2. Certificates of Compliance shall include the name, source, and description of all materials used in each class of concrete and shall be signed by the concrete supplier certifying that each material item complies with, or exceeds the specified requirements. Certificates of Compliance shall be furnished with mix designs for review.
3. When Certificates of Compliance cannot be provided, hire a professional testing laboratory to verify compliance of each type of material to be used in each Class of Concrete. The cost of testing shall be paid for by the Contractor.

F. Laboratory Test Reports:
1. Laboratory test reports shall show the name of testing agency, date of testing, types of tests performed and shall be signed by a principal of the testing agency who is a registered civil engineer in the State of California. Laboratory tests shall not be older than eight months and shall certify that the tested materials meet the specified standards.
2. Laboratory test reports for concrete mix designs shall clearly identify each material or mix number of each mix tested to verify the correlation between the tested mix designs and the proposed mix designs.
3. When required by other portions of these Technical Specifications, laboratory test reports shall be submitted for each material to be used in each class of concrete, or for each mix design and shall show compliance with appropriate ASTM Standards, California Tests, and these Technical Specifications.

G. Qualifications of Professional Testing Laboratory: Submit a list of all laboratory facilities, technicians and inspectors indicating the current accredited or certified sampling, tests and inspections, and submit copies of all certificates.

1.8 QUALITY ASSURANCE AND CONTROL

A. Contractor Quality Control:
   1. Select a qualified concrete supplier capable of meeting project requirements and the requirements of these Technical Specifications.
   2. The concrete supplier shall be certified by the National Ready Mix Concrete Association and shall hold a valid certificate of conformance for concrete production facilities.
   3. In conformance with applicable requirements of Section SC-33, Structural Quality Control, the Contractor shall provide a quality control plan to assure control and uniformity of materials, conformance with accepted mix designs, and prompt and proper delivery of concrete to the jobsite in accordance with applicable requirements of ASTM C94/C94M. Include in the plan all tests the Contractor will perform to verify compliance with Specification requirements, and the independent laboratory the Contractor intends to engage to perform the tests.
   4. Retain an Independent Testing Agency to perform concrete sampling, testing and inspections as required by these Technical Specifications, in accordance with Section SC-33, Structural Quality Control.
   5. Sampling, Testing and Inspection:
      a. The Independent Testing Agency shall perform sampling, testing, and inspections in accordance with the provisions herein. Attention is also directed to Article 2.02, “Tests and Analyses of Materials” and Article 3.01, “Field Quality Control,” herein.
      b. Notify the Engineer at least 48 hours in advance of sampling, tests and inspections being performed by the Independent Testing Agency. The Engineer may elect to observe these procedures. Provide samples and facilities for inspection to the Engineer if requested.
      c. The Independent Testing Agency shall collect samples of materials for testing in accordance with the provisions outlined herein and as directed by the Engineer. Select samples that fairly represent average quality and grading of aggregates proposed for the work. When aggregates have been approved, no change will be allowed without written permission of the Engineer. Maintain stocks of accepted aggregates so no pour need be interrupted.
   6. Qualifications of the Independent Testing Agency: Refer to Section SC-33, Structural Quality Control.
      a. Laboratory tests shall be carried out in facilities that have current AASHTO Materials Reference Library (AMRL) accreditation as an AASHTO R-18 Accredited Laboratory for that test.

B. Engineer Quality Assurance:
   1. The Engineer will monitor the implementation of the Contractor’s quality control programs through observation, inspection, sampling and testing in accordance with Section SC-33, Structural Quality Control.

1.9 ENVIRONMENTAL REQUIREMENTS

A. Hot Weather Concreting:

DocuSign Envelope ID: 330DEBD6-9A9E-4F34-BDCC-1AC1BAA701E9

1. Batching, mixing, and delivering of concrete in hot weather shall conform to the applicable requirements of ACI 305R.
2. Maximum ambient temperature for placing concrete shall be 90 degrees F. If the ambient temperature exceeds 90 degrees F, the mix shall be cooled by an appropriate method approved by the Engineer, such as icing the mixing water. Maintain uniform concrete temperature of succeeding batches placed.

B. Cold Weather Concreting:

1. Batching, mixing, and delivering of concrete in cold weather shall conform to the applicable requirements of ACI 306.1.
2. When the ambient temperature drops below 35 degrees F, or is expected to drop below 35 degrees F during placement, the temperature of the mix shall be heated by adding hot water, not exceeding 120 degrees F, or by steam heating the aggregates, or both. Other methods of heating aggregates will not be permitted. Steam heating the aggregates may require an adjustment in the mixing water.
3. All concrete shall be protected against freezing for at least 36 hours after placing.

PART 2 – PRODUCTS

2.1 MATERIALS

A. Cementitious Materials

1. Unless otherwise specified, cementitious material shall be either a combination of Type II or Type V portland cement and a supplementary cementitious material, or a blended cement. No cementitious material shall be used in the work unless it is on Caltrans' Pre-Qualified Products List at the time of mix design submittal. Information regarding cementitious material qualification and placement on Caltrans' approved list can be obtained at the Caltrans Transportation Laboratory.
2. Cementitious materials used in cast-in-place concrete for exposed surfaces of like elements of a structure shall be from the same sources and of the same proportions.
3. Protect cementitious materials from moisture until used. Sacked cementitious materials shall be piled to permit access for tallying, inspecting, and identifying each shipment.
4. Provide facilities to ensure that cementitious materials meeting this Article 2.01 are kept separate from other cementitious materials. Sampling cementitious materials shall be in conformance with California Test 125.
5. Furnish a Certificate of Compliance for cementitious materials. The Certificate of Compliance shall indicate the source by name and location (including country, state, and city). If cementitious material is delivered directly to the job site, the Certificate of Compliance shall be signed by the cementitious material supplier. If the cementitious material is used in ready-mixed concrete or in precast concrete products purchased as such by the Contractor, the Certificate of Compliance shall be signed by the manufacturer of the concrete or product.

B. Cement

1. Portland cement shall conform to ASTM C 150 except the C_3S content of Type II cement shall not exceed 65 percent.
2. Blended cement shall conform to the requirements for Portland Blast-Furnace Slag Cement Type IS (MS) or Portland-Pozzolan Cement, Type IP (MS) in AASHTO M240, except that the maximum limits on pozzolan content shall not apply. Blended cement shall be comprised of Type II or Type V cement and supplementary cementitious material produced either by intergrinding portland cement clinker and SCM, by blending portland

cement and either finely ground granulated blast furnace slag or finely divided pozzolan, or a combination of intergrinding and blending.

3. In addition, Type II portland cement, and Type V portland cement shall conform to the following requirements:
   a. The cement shall not contain more than 0.60 percent by mass of alkalies, calculated as the percentage of Na_2O plus 0.658 times the percentage of K_2O, when determined by methods as required in AASHTO T105; and
   b. The autoclave expansion shall not exceed 0.50-percent
4. Type III portland cement shall be used only as specified in these Technical Specifications or with the approval of the Engineer. Type III portland cement shall conform to the additional requirements listed above for Type II portland cement. The Contractor may use Type III Portland cement in the manufacturing of precast concrete.

C. Supplementary Cementitious Materials

1. Each supplementary cementitious material shall conform to one of the following:
   a. Fly ash conforming to the requirements in AASHTO M295, Class F, and these specifications. The available alkali, as sodium oxide equivalent, shall not exceed 1.5 percent when determined in conformance with the requirements in ASTM C311 or the total alkali, as sodium oxide equivalent, shall not exceed 5.0 percent when determined in conformance with the requirements in AASHTO T105.
   b. Ultra fine fly ash (UFFA) conforming to the requirements in AASHTO M295, Class F, and the following chemical and physical requirements:

Chemical Requirements	Percent
Sulfur Trioxide (SO_3)	1.5 max.
Loss on ignition	1.2 max.
Available Alkalies (as Na_2O) equivalent	1.5 max.
Physical Requirements	Percent
Particle size distribution	
Less than 3.5 microns	50
Less than 9.0 microns	90
Strength Activity Index with portland cement	
7 days	95 (minimum % of control)
28 days	110 (minimum % of control)
Expansion at 16 days when testing job materials in conformance with ASTM C1567*	0.10 max.

* In the test mix, Type II or Type V portland cement shall be replaced with at least 12% UFFA by weight.

   c. Raw or calcined natural pozzolans conforming to the requirements in AASHTO M295, Class N and these Technical Specifications. The available alkali, as sodium oxide equivalent, shall not exceed 1.5 percent when determined in conformance with the requirements in ASTM C311 or the total alkali, as sodium oxide equivalent, shall not exceed 5.0 percent when determined in conformance with the requirements in AASHTO T105.
   d. Metakaolin conforming to the requirements in AASHTO M295, Class N, and the following chemical and physical requirements:

Chemical Requirements	Percent
Silicon Dioxide (SiO_2) + Aluminum Oxide (Al_2O_3)	92.0 min.
Calcium Oxide (CaO)	1.0 max
Sulfur Trioxide (SO_3)	1.0 max.
Loss on ignition	1.2 max.
Available Alkalies (as Na_2O) equivalent	1.0 max.
Physical Requirements	**Percent**
Particle size distribution Less than 45 microns	95
Strength Activity Index with portland cement 7 days 28 days	 100 (minimum % of control) 100 (minimum % of control)

e. Ground Granulated Blast Furnace Slag (GGBFS) conforming to the requirements in AASHTO M302, Grade 100 or Grade 120.

f. Silica Fume conforming to the requirements of AASHTO M307, with reduction in mortar expansion of 80 percent, minimum, using the cement from the proposed mix design.

2. Commingling of fly ash from different sources at uncontrolled ratios is permissible only if the following criteria are satisfied:

a. Sources of fly ash to be commingled shall each produce fly ash that conforms to the requirements in AASHTO M295, Class F.

b. Testing of the commingled product is the responsibility of the fly ash supplier.

c. Each fly ash's running average of relative density shall not differ from any other by more than 0.25 at the time of commingling.

d. Each fly ash's running average of loss on ignition shall not differ from any other by more than one percent at the time of commingling.

e. The final product of commingled fly ash shall conform to the requirements in AASHTO M295, Class F.

D. Required Use of Supplementary Cementitious Materials (SCM)

1. The amount of portland cement and SCM used in portland cement concrete shall conform to the minimum cementitious material content provisions in Article 1.04, “Classes of Concrete,” or Article 2.06.E, "Optional Use of Chemical Admixtures," and these Technical Specifications.

2. The SCM content in portland cement concrete shall conform to one of the following:

a. Any combination of portland cement and at least one SCM, satisfying Equations (1) and (2):

Equation (1)

$$\frac{(25 \times UF) + (12 \times FA) + (10 \times FB) + (6 \times SL)}{MC} \geq X$$

Where:

DocuSign Envelope ID: 330DEBD6-9A9E-4F34-BDCC-1AC1BAA701E9

UF = Silica fume, metakaolin, or UFFA, including the amount in blended cement, pounds per cubic yard.
FA = Fly ash or natural pozzolan conforming to the requirements in AASHTO M295, Class F or N with a CaO content up to 10 percent, including the amount in blended cement, pounds per cubic yard.
FB = Fly ash or natural pozzolan conforming to the requirements in AASHTO M295, Class F or N with a CaO content up to 15 percent, including the amount in blended cement, pounds per cubic yard.
SL = GGBFS, including the amount in blended cement, pounds per cubic yard.
MC = Minimum amount of cementitious material specified, pounds per cubic yard.
X = 1.8 for innocuous aggregate, 3.0 for all other aggregate.

Equation (2)

$$MC - MSCM - PC \geq 0$$

Where:
MC = Minimum amount of cementitious material specified, pounds per cubic yard.
MSCM = The minimum sum of SCMs that satisfies Equation (1) above, pounds per cubic yard.
PC = The amount of portland cement, including the amount in blended cement, pounds per cubic yard.

b. 15 percent of Class F fly ash with at least 48 ounces of $LiNO_3$ solution added per 100 pounds of portland cement. CaO content of the fly ash shall not exceed 15 percent.

3. The SCM content in structural precast portland cement concrete shall conform to one of the following:

a. Any combination of portland cement and SCM, satisfying the following equation:

Equation (3)

$$\frac{(25 \times UF) + (12 \times FA) + (10 \times FB) + (6 \times SL)}{TC} \geq X$$

Where:
UF = Silica fume, metakaolin, or UFFA, including the amount in blended cement, pounds per cubic yard.
FA = Fly ash or natural pozzolan conforming to the requirements in AASHTO M295, Class F or N with a CaO content up to 10 percent, including the amount in blended cement, pounds per cubic yard.
FB = Fly ash or natural pozzolan conforming to the requirements in AASHTO M295, Class F or N with a CaO content up to 15 percent, including the amount in blended cement, pounds per cubic yard.
SL = GGBFS, including the amount in blended cement, pounds per cubic yard.
TC = Total amount of cementitious material used in the mix, pounds per cubic yard.

DocuSign Envelope ID: 330DEBD6-9A9E-4F34-BDCC-1AC1BAA701E9

X = 0.0 if precast members are constructed with portland cement concrete using aggregate that is "innocuous" in conformance with the provisions in Article 2.01.E, "Aggregates," herein.
X = 3.0 for all other aggregate.

b. 15 percent of Class F fly ash with at least 48 ounces of $LiNO_3$ solution added per 100 pounds of portland cement. CaO content of the fly ash shall not exceed 15 percent.

c. Any combination of supplementary cementitious material and portland cement may be used if the expansion of cementitious material and aggregate does not exceed 0.10 percent when tested in conformance with the requirements in ASTM C 1567. Test data shall be submitted with each mix design. Test data accepted by the Independent Testing Agency no more than 3 years prior to the first working day of this contract will be acceptable for this entire contract, provided the data was for the same concrete mix and the same materials and material sources to be used on this contract.

E. Aggregates:

1. To be considered innocuous, aggregate must be on Caltrans' approved list "Innocuous Aggregates For Use in Concrete." Information regarding aggregate qualification and placement on the Caltrans' approved list can be obtained from the Caltrans Transportation Laboratory.
2. Both coarse and fine aggregate must be on Caltrans' approved list for the aggregate used in concrete to be considered innocuous.
3. Aggregates shall be free from deleterious coatings, clay balls, roots, bark, sticks, rags, and other extraneous material.
4. Provide safe and suitable facilities, including necessary splitting devices for obtaining samples of aggregates, in conformance with California Test 125.
5. Aggregates shall be of such character that it will be possible to produce workable concrete within the limits of water content provided in Article 2.08, "Amount of Water and Penetration," herein.
6. Aggregates shall have not more than 10 percent loss when tested for soundness in conformance with California Test 214. The soundness requirement for fine aggregate will be waived, provided that the durability index, D_f, of the fine aggregate is 60 or greater when tested for durability in conformance with California Test 229.
7. If the results of any one or more of the Cleanness Value, Sand Equivalent, or aggregate grading tests do not meet the requirements specified for "Operating Range" but all meet the "Contract Compliance" requirements, the placement of concrete shall be suspended at the completion of the current pour until tests or other information indicate that the next material to be used in the work will comply with the requirements specified for "Operating Range."
8. If the results of either or both the Cleanness Value and coarse aggregate grading tests do not meet the requirements specified for "Contract Compliance," the concrete that is represented by the tests shall be removed.
9. If the results of either or both the Sand Equivalent and fine aggregate grading tests do not meet the requirements specified for "Contract Compliance," the concrete which is represented by the tests shall be removed.
10. No single Cleanness Value, Sand Equivalent, or aggregate grading test shall represent more than 300 cubic yards of concrete or one day's pour, whichever is smaller.

11. When the source of an aggregate is changed, adjust the mix proportions and submit the mix design in writing to the Engineer before using the aggregates.
12. Aggregate for Exposed Concrete: Aggregate for concrete which will be exposed to the public shall be obtained from one source for each type of aggregate required in order to produce a uniform color.

F. Coarse Aggregate

1. Coarse aggregate shall consist of gravel, crushed gravel, crushed rock, reclaimed aggregate, crushed air-cooled iron blast furnace slag or combinations thereof. Crushed air-cooled blast furnace slag shall not be used in reinforced or prestressed concrete.
2. Reclaimed aggregate is aggregate that has been recovered from plastic concrete by washing away the cementitious material. Reclaimed aggregate shall conform to all aggregate requirements.
3. Coarse aggregate shall conform to the following quality requirements:

Tests	California Test	Requirements
Loss in Los Angeles Rattler (after 500 revolutions)	211	45% max.
Cleanness Value		
Operating Range	227	75 min.
Contract Compliance	227	71 min.

4. In lieu of the above Cleanness Value requirements, a Cleanness Value "Operating Range" limit of 71, minimum, and a Cleanness Value "Contract Compliance" limit of 68, minimum, will be used to determine the acceptability of the coarse aggregate if the Contractor furnishes a Certificate of Compliance, certifying that:
   a. Coarse aggregate sampled at the completion of processing at the aggregate production plant had a Cleanness Value of not less than 82 when tested in conformance with California Test 227; and
   b. Prequalification tests performed in conformance with California Test 549 indicate that the aggregate would develop a relative strength of not less than 95 percent and would have a relative shrinkage not greater than 105 percent, based on concrete.

G. Fine Aggregate

1. Fine aggregate shall consist of natural sand, manufactured sand produced from larger aggregate or a combination thereof. Manufactured sand shall be well graded.
2. Fine aggregate shall conform to the following quality requirements:

Tests	California Test	Requirements
Organic Impurities	213	Satisfactory[a]
Mortar Strengths Relative to Ottawa Sand	515	95%, min.
Sand Equivalent:		
Operating Range	217	75, min.
Contract Compliance	217	71, min.

   a. Fine aggregate developing a color darker than the reference standard color solution may be accepted if it is determined by the Engineer, from mortar strength tests, that a darker color is acceptable.

3. In lieu of the above Sand Equivalent requirements, a Sand Equivalent "Operating Range" limit of 71, minimum, and a Sand Equivalent "Contract Compliance" limit of 68, minimum, will be used to determine the acceptability of the fine aggregate if the Contractor furnishes a Certificate of Compliance, certifying that:
   a. Fine aggregate sampled at the completion of processing at the aggregate production plant had a Sand Equivalent value of not less than 82 when tested by California Test 217; and
   b. Prequalification tests performed in conformance with California Test 549 indicate that the aggregate would develop a relative strength of not less than 95 percent and would have a relative shrinkage not greater than 105 percent, based on concrete.

H. Concrete Admixtures: The Contractor may include accepted concrete admixtures in the mix to improve the water-cement ratio or water-cementitious ratio or workability of the concrete, providing the strengths specified and other desirable characteristics of the concrete can be achieved and maintained. Admixtures require the Engineer's acceptance before they may be used, and shall be included in the design mix, introduced in solution form. Admixtures shall be added at the batch plant, except as otherwise noted herein.
   1. Chemical Admixtures: ASTM C494/C494M.
   2. Air Entraining Admixtures: ASTM C260.
   3. Pigments for integrally colored concrete: ASTM C979, for synthetic or natural iron oxides (red).
   4. Prohibited Admixtures: Admixtures containing chlorides or sulfides are not acceptable.

I. Water:
   1. In conventionally reinforced concrete work, the water for curing, for washing aggregates, and for mixing shall be free from oil and shall not contain more than 1,000 parts per million of chlorides as Cl, when tested in conformance with California Test 422, nor more than 1,300 parts per million of sulfates as SO4, when tested in conformance with California Test 417. In prestressed concrete work, the water for curing, for washing aggregates, and for mixing shall be free from oil and shall not contain more than 650 parts per million of chlorides as Cl, when tested in conformance with California Test 422, nor more than 1,300 parts per million of sulfates as SO4, when tested in conformance with California Test 417. In no case shall the water contain an amount of impurities that will cause either: 1) a change in the setting time of cement of more than 25 percent when tested in conformance with ASTM C191 or ASTM C266 or 2) a reduction in the compressive strength of mortar at 14 days of more than 5 percent, when tested in conformance with ASTM C109/C109M, when compared to the results obtained with distilled water or deionized water, tested in conformance with ASTM C109.
   2. In nonreinforced concrete work, the water for curing, for washing aggregates and for mixing shall be free from oil and shall not contain more than 2,000 parts per million of chlorides as Cl, when tested in conformance with California Test 422, or more than 1,500 parts per million of sulfates as SO4, when tested in conformance with California Test 417.
   3. In addition to the above provisions, water for curing concrete shall not contain impurities in a sufficient amount to cause discoloration of the concrete or produce etching of the surface.
   4. Water reclaimed from mixer wash-out operations may be used in mixing concrete. The water shall not contain coloring agents or more than 300 parts per million of alkalis (Na_2O + 0.658 K_2O) as determined on the filtrate. The specific gravity of the water shall not exceed 1.03 and shall not vary more than ±0.010 during a day's operations.

DocuSign Envelope ID: 330DEBD6-9A9E-4F34-BDCC-1AC1BAA701E9

J. Reinforcement Fibers: Chopped strands of alkali-resistant polypropylene fibers added to the concrete mix for protection against shrinkage cracks where indicated or required.

2.2 TESTS AND ANALYSES OF MATERIALS

A. Contractor Quality Control:

1. Cooperate with and notify the Engineer at least 48 hours in advance of sampling, tests and inspections, being performed by the Independent Testing Agency. The Engineer may elect to observe these procedures.
2. Tests and Sample Analyses: Testing of cement and analysis of aggregates shall be performed by the Independent Testing Agency as specified herein. Mill tests and supplier's certification of compliance with ASTM or other specifications as required in these Technical Specifications will be accepted in lieu of testing of cement and analysis of aggregates. Tests and services shall consist of the following:
   a. Testing of portland cement in accordance with ASTM C150 and ASTM C114.
   b. Analysis of aggregates in accordance with ASTM C33, sieve analysis of fine and coarse aggregates in accordance with ASTM C136, sand equivalence in accordance with California Test 217 and cleanness value in accordance with California Test 227.
3. Certified Test Data and Trial Batch Test Reports:
   a. When concrete is specified by compressive strength, prequalification of materials, mix proportions, mixing equipment, and procedures proposed for use will be required prior to placement of the concrete. Prequalification shall be accomplished by the submission by the Contractor of acceptable certified test data or trial batch reports to the Engineer. Prequalification data shall be based on the use of materials, mix proportions, mixing equipment, procedures, and size of batch proposed for use in the work.
   b. Certified test data, in order to be acceptable, shall indicate that not less than 90 percent of at least 20 consecutive tests exceed the specified strength at the maximum number of cure days specified or allowed, and none of those tests are less than 95 percent of specified strength. Strength tests included in the data shall be the most recent tests made on concrete of the proposed mix design and all shall have been made within one year of the proposed use of the concrete.
   c. Trial batch test reports, in order to be acceptable, shall indicate that the average compressive strength of five consecutive concrete cylinders, taken from a single batch, at not more than 28 days (or the maximum age allowed) after molding shall be at least 580 pounds per square inch greater than the specified 28-day compressive strength, and no individual cylinder shall have a strength less than the specified strength at the maximum age specified or allowed. Data contained in the report shall be from trial batches that were produced within one year of the proposed use of specified strength concrete in the project. Whenever air-entrainment is required, the air content of trial batches shall be equal to or greater than the air content specified for the concrete without reduction due to tolerances.
   d. Tests shall be performed in conformance with either the appropriate California Test methods or the comparable ASTM test methods. Equipment employed in testing shall be in good condition and shall be properly calibrated. The Engineer shall be notified sufficiently in advance of performing the tests in order to witness the test procedures.

DocuSign Envelope ID: 330DEBD6-9A9E-4F34-BDCC-1AC1BAA701E9

e. The certified test data and trial batch test reports shall include the following information:
   1) Date of mixing.
   2) Mixing equipment and procedures used.
   3) The size of batch in cubic yards and the weight, type, and source of all ingredients used.
   4) Penetration or slump (if the concrete will be placed under water or placed in cast-in-place concrete piles) of the concrete.
   5) The air content of the concrete if an air-entraining admixture is used.
   6) The age at time of testing and strength of all concrete cylinders tested.

f. Certified test data and trial batch test reports shall be signed by an official of the firm that performed the tests.

g. When approved by the Engineer, concrete from trial batches may be used in the work at locations where concrete of a lower quality is required and the concrete will be paid for as the type or class of concrete required at that location.

h. After materials, mix proportions, mixing equipment, and procedures for concrete have been prequalified for use, additional prequalification by testing of trial batches will be required prior to making changes that, in the judgment of the Engineer, could result in a strength of concrete below that specified.

i. The Contractor's attention is directed to the time required to test trial batches and the Contractor shall be responsible for production of trial batches at a sufficiently early date so that the progress of the work is not delayed.

j. When precast concrete members are manufactured at the plant of an established manufacturer of precast concrete members, the mix proportions of the concrete shall be determined by the Contractor and a trial batch and prequalification of the materials, mix proportions, mixing equipment and procedures will not be required.

4. Compressive Strength: The Independent Testing Agency shall perform sampling, testing, and inspections in accordance with the provisions herein, and Part 6 of the Special Provisions.

a. Concrete compressive strength requirements consist of a minimum strength that shall be attained before various loads or stresses are applied to the concrete and, for concrete designated by strength, a minimum strength at the age of 28 days or at the age otherwise allowed in Article 1.04, "Classes of Concrete," herein. The various strengths required are specified in these Technical Specifications or are shown on the Contract Drawings.

b. The compressive strength of concrete will be determined from test cylinders that have been fabricated from concrete sampled in conformance with California Test 539. Test cylinders shall be molded and initially field cured in conformance with California Test 540. Test cylinders shall be cured and tested after receipt in conformance with California Test 521. A strength test shall consist of the average strength of two cylinders fabricated from material taken from a single load of concrete, except that, if any cylinder should show evidence of improper sampling, molding, or testing, that cylinder shall be discarded and the strength test shall consist of the strength of the remaining cylinder.

c. When concrete compressive strength is specified as a prerequisite to applying loads or stresses to a concrete structure or member, test cylinders for other than steam-cured concrete shall be cured in conformance with Method 1 of California

DocuSign Envelope ID: 330DEBD6-9A9E-4F34-BDCC-1AC1BAA701E9

Test 540. The compressive strength of concrete determined for these purposes will be evaluated on the basis of individual tests.

d. When concrete is designated by 28-day compressive strength rather than by cementitious material content, the concrete strength to be used as a basis for acceptance of other than steam-cured concrete shall be determined from cylinders cured in conformance with Method 1 of California Test 540. If the result of a single compressive strength test at the maximum age specified or allowed is below the specified strength but is 85 percent or more of the specified strength, make corrective changes, subject to approval of the Engineer, in the mix proportions or in the concrete fabrication procedures, before placing additional concrete. In addition, such corrective changes shall be made when the compressive strength of concrete tested at seven days indicates, in the judgment of the Engineer, that the concrete will not attain the required compressive strength at the maximum age specified or allowed. Concrete represented by a single test that indicates a compressive strength of less than 85 percent of the specified 28-day compressive strength will be rejected in conformance with the provisions in Section 6-1.04, "Defective Materials," of the Caltrans Standard Specifications.

e. If the test result indicates that the compressive strength at the maximum curing age specified or allowed is below the specified strength, but is 85 percent or more of the specified strength, the concrete shall be rejected as specified above, unless the Contractor obtains and submits evidence acceptable to the Engineer that the strength of the concrete placed in the work meets or exceeds the specified 28-day compressive strength. If the test result indicates a compressive strength at the maximum curing age specified or allowed below 85 percent, the concrete represented by that test will be rejected, unless the Contractor obtains and submits evidence acceptable to the Engineer that the strength and quality of the concrete placed in the work are acceptable. If the evidence consists of tests made on cores taken from the work, the cores shall be obtained and tested in conformance with ASTM C42/C42M.

f. No single compressive strength test shall represent more than 100 cubic yards of concrete or concrete cast on different days.

g. A set of four cylinders shall be prepared for every compressive strength test required. One cylinder shall be tested at 3 days, one cylinder at 7 days, one cylinder at 28 days, and one cylinder shall be retained for further testing as may be required. Cylinders shall be prepared and moist cured in accordance with ASTM C31/C31M, and tested in accordance with ASTM C39/C39M.

h. If a precast concrete member is steam-cured, the compressive strength of the concrete shall be determined from test cylinders that have been handled and stored in conformance with Method 3 of California Test 540. The compressive strength of steam-cured concrete shall be evaluated on the basis of individual tests representing specific portions of production. If the concrete is designated by 28-day compressive strength rather than by cementitious material content, the concrete shall be considered to be acceptable whenever its compressive strength reaches the specified 28-day compressive strength provided that strength is reached in not more than the maximum number of days specified or allowed after the member is cast.

B. Engineer Quality Assurance:

DocuSign Envelope ID: 330DEBD6-9A9E-4F34-BDCC-1AC1BAA701E9

1. The Engineer will monitor the implementation of the Contractor's quality control programs through observation, inspection, sampling and testing in accordance with Part 6 of the Special Provisions.

2.3 MIX DESIGNS

A. Design of concrete mixes, including recommended amounts of admixture and water to be used in the mixes, shall be obtained by the Contractor from a qualified independent testing laboratory or agency, or from a mill or ready-mix plant, properly equipped to design concrete mixes. The design shall be performed and certified by a professional engineer currently registered as a civil or structural engineer in the State of California. The laboratory, agency, mill, or ready-mix plant shall meet applicable requirements of ASTM E329, and shall be approved by the Engineer. Costs of obtaining the mix designs shall be paid by the Contractor.

B. Selection of mix proportions shall conform to the applicable requirements of ACI 211.1 and ACI 211.2. Concrete shall comply with ACI 301 and ACI 318/318R, as applicable. Ensure that mix designs will produce concrete suited for proper placement and finishing.

C. Mix design for below-grade retaining walls shall include 15 percent replacement of the cement with fly ash, along with a plasticizing admixture conforming to ASTM C1017/C1017M, to provide a dense and plastic concrete with low shrinkage and permeability characteristics.

D. Mix design for architectural concrete and formed concrete which will be exposed to the public in the finished work shall include 10 percent replacement of the cement with fly ash along with a plasticizing admixture, conforming to ASTM C1017/C1017M, to provide a dense and plastic concrete mix which completely fills out the forms and form detail without air holes and rock pockets.

E. Mix designs shall indicate brands, types, and quantities of admixtures included. If fly ash is proposed, it shall be identified as such (for example, "fly ash"), and the mix design shall identify the percentage of cement replacement and the locations in the structures where such mixes are proposed for use.

F. Mix designs for integrally colored concrete shall indicate brand type of natural or synthetic metallic oxide or pigment, and quantity used, all prepared as specified in ASTM C979. Compensate for fly ash with additional pigment as applicable. All concrete encasements of below-grade electrical conduits and ductbanks shall be integrally colored red concrete.

G. Mix design for mass concrete shall have a percentage of fly ash replacement of cement by weight to reduce the amount of heat generated during heat of hydration. Amount of fly ash to be introduced into the mix shall be approved by the Engineer. ASTM C494/C494M Type F or Type G high-range water-reducing admixture may also be used to reduce heat of hydration.

H. If concrete is to be placed by pumping, concrete mixes shall be designed in accordance with ACI 304R and ACI 304.2R, and shall include strengths and slumps.

I. Mix design for controlled density fill (controlled low strength material) to be used for structural backfill shall contain approximately 20 to 30 pounds of cement per cubic yard along with fly ash in amount required to provide a workable mixture. The 28-day compressive strength shall be not less than 50 psi or more than 150 psi. Soil or aggregate component shall be an inert material without organic matter, all passing a 1-inch sieve.

J. Mix designs shall indicate location of each mix within the structure. Mix designs shall specify both coarse and fine aggregate sources.

K. Concrete mixes shall contain the minimum amount of cementitious material per cubic yard specified in Article 1.04, "Classes of Concrete," herein, regardless of the fact that the strengths specified may be obtained with lesser amounts of cementitious material. Exception will be made only for mass concrete to reduce heat of hydration as hereinbefore specified.

DocuSign Envelope ID: 330DEBD6-9A9E-4F34-BDCC-1AC1BAA701E9

L. The water-to-cement ratio shall not exceed 0.40 for concrete which may be exposed to underground water, such as box culverts, footings, trench structures and retaining walls. Conversion to equivalent water-to-cementitious ratio shall be performed in accordance with ACI 211.1.

M. Concrete for duct banks shall have a 28-day compressive strength of 3,000 psi, minimum.

2.4 MIXING AND TRANSPORTING

A. General

1. Concrete shall be mixed in mechanically operated mixers.
2. Equipment having components made of aluminum or magnesium alloys that would have contact with plastic concrete during mixing, transporting, or pumping of portland cement concrete shall not be used.
3. Concrete shall be homogeneous and thoroughly mixed, and there shall be no lumps or evidence of undispersed cementitious material.
4. Uniformity of concrete mixtures shall be determined by differences in penetration as determined by California Test 533, or slump as determined by ASTM C143/C143M, and by variations in the proportion of coarse aggregate as determined by California Test 529.
5. When the mix design specifies a penetration value, the difference in penetration, determined by comparing penetration tests on two samples of mixed concrete from the same batch or truck mixer load, shall not exceed 1/2 inch. When the mix design specifies a slump value, the difference in slump, determined by comparing slump tests on two samples of mixed concrete from the same batch or truck mixer load, shall not exceed the values given in the table below. Variation in the proportion of coarse aggregate shall be determined by comparing the results of tests of two samples of mixed concrete from the same batch or truck mixer load and the difference between the two results shall not exceed 170 pounds per cubic yard of concrete.

Average Slump	Maximum Permissible Difference
Less than 4 inches	1 inch
4 to 6 inches	1 1/2 inches
Greater than 6 to 9 inches	2 inches

6. Furnish samples of the freshly mixed concrete and provide satisfactory facilities for obtaining the samples.

B. Machine Mixing

1. Concrete mixers may be of the revolving drum or the revolving blade type, and the mixing drum or blades shall be operated uniformly at the mixing speed recommended by the manufacturer. Mixers and agitators that have an accumulation of hard concrete or mortar shall not be used.
2. The temperature of mixed concrete, immediately before placing, shall be not less than 50 degrees F or more than 90 degrees F. Aggregates and water shall be heated or cooled as necessary to produce concrete within these temperature limits. Neither aggregates nor mixing water shall be heated to exceed 150 degrees F. If ice is used to cool the concrete, discharge of the mixer will not be permitted until all ice is melted.
3. The batch shall be so charged into the mixer that some water will enter in advance of cementitious materials and aggregates. All water shall be in the drum by the end of the first one-fourth of the specified mixing time.

DocuSign Envelope ID: 330DEBD6-9A9E-4F34-BDCC-1AC1BAA701E9

4. Cementitious materials shall be batched and charged into the mixer by means that will not result either in loss of cementitious materials due to the effect of wind, in accumulation of cementitious materials on surfaces of conveyors or hoppers, or in other conditions that reduce or vary the required quantity of cementitious material in the concrete mixture.
5. Paving and stationary mixers shall be operated with an automatic timing device. The timing device and discharge mechanism shall be interlocked so that during normal operation no part of the batch will be discharged until the specified mixing time has elapsed.
6. The total elapsed time between the intermingling of damp aggregates and all cementitious materials and the start of mixing shall not exceed 30 minutes.
7. The size of batch shall not exceed the manufacturer's guaranteed capacity.
8. When producing concrete for pavement or base, suitable batch counters shall be installed and maintained in good operating condition at job site batching plants and stationary mixers. The batch counters shall indicate the exact number of batches proportioned and mixed.
9. Concrete shall be mixed and delivered to the job site by means of one of the following combinations of operations:
    a. Mixed completely in a stationary mixer and the mixed concrete transported to the point of delivery in truck agitators or in nonagitating hauling equipment (central-mixed concrete).
    b. Mixed partially in a stationary mixer, and the mixing completed in a truck mixer (shrink-mixed concrete).
    c. Mixed completely in a truck mixer (transit-mixed concrete).
    d. Mixed completely in a paving mixer.

10 Agitators may be truck mixers operating at agitating speed or truck agitators. Each mixer and agitator shall have attached thereto in a prominent place a metal plate or plates on which is plainly marked the various uses for which the equipment is designed, the manufacturer's guaranteed capacity of the drum or container in terms of the volume of mixed concrete and the speed of rotation of the mixing drum or blades.

11. Truck mixers shall be equipped with electrically or mechanically actuated revolution counters by which the number of revolutions of the drum or blades may readily be verified.
12. When shrink-mixed concrete is furnished, concrete that has been partially mixed at a central plant shall be transferred to a truck mixer and all requirements for transit-mixed concrete shall apply. No credit in the number of revolutions at mixing speed will be allowed for partial mixing in a central plant.

C. Transporting Mixed Concrete

1. Mixed concrete may be transported to the delivery point in truck agitators or truck mixers operating at the speed designated by the manufacturer of the equipment as agitating speed, or in non-agitating hauling equipment, provided the consistency and workability of the mixed concrete upon discharge at the delivery point is suitable for adequate placement and consolidation in place, and provided the mixed concrete after hauling to the delivery point conforms to the provisions in Article 2.04A, "General," herein.
2. Truck agitators shall be loaded not to exceed the manufacturer's guaranteed capacity and shall maintain the mixed concrete in a thoroughly mixed and uniform mass during hauling.

DocuSign Envelope ID: 330DEBD6-9A9E-4F34-BDCC-1AC1BAA701E9

3. Bodies of nonagitating hauling equipment shall be constructed so that leakage of the concrete mix, or any part thereof, will not occur at any time.
4. Concrete hauled in open-top vehicles shall be protected during hauling against rain or against exposure to the sun for more than 20 minutes when the ambient temperature exceeds 75 degrees F.
5. No additional mixing water shall be incorporated into the concrete during hauling or after arrival at the delivery point, unless authorized by the Engineer. If the Engineer authorizes additional water to be incorporated into the concrete, the drum shall be revolved not less than 30 revolutions at mixing speed after the water is added and before discharge is commenced.
6. The rate of discharge of mixed concrete from truck mixer-agitators shall be controlled by the speed of rotation of the drum in the discharge direction with the discharge gate fully open.
7. If a truck mixer or agitator is used for transporting concrete to the delivery point, discharge shall be completed within 1.5 hours or before 250 revolutions of the drum or blades, whichever occurs first, after the introduction of the cement to the aggregates. Under conditions contributing to quick stiffening of the concrete, or if the temperature of the concrete is 85 degrees F or above, the time allowed may be less than 1.5 hours. If an admixture is used to retard the set time, the temperature of the concrete shall not exceed 85 degrees F, the time limit shall be two hours, and the revolution limitation shall be 300.
8. If nonagitating hauling equipment is used for transporting concrete to the delivery point, discharge shall be completed within one hour after the addition of the cement to the aggregates. Under conditions contributing to quick stiffening of the concrete, or when the temperature of the concrete is 85 degrees F or above, the time between the introduction of cement to the aggregates and discharge shall not exceed 45 minutes.
9. Each load of concrete delivered at the job site shall be accompanied by a weighmaster certificate showing the mix identification number, nonrepeating load number, date and time at which the materials were batched, the total amount of water added to the load, and for transit-mixed concrete, the reading of the revolution counter at the time the truck mixer is charged with cement. This weighmaster certificate shall also show the actual scale weights (pounds) for the ingredients batched. Theoretical or target batch weights shall not be used as a substitute for actual scale weights.
10. Weighmaster certificates shall be provided in printed form, or if approved by the Engineer, the data may be submitted in electronic media. Electronic media shall be presented in a tab-delimited format on a 3 1/2-inch diskette with a capacity of at least 1.4 megabytes. Captured data, for the ingredients represented by each batch shall be "line feed, carriage return" (LFCR) and "one line, separate record" with allowances for sufficient fields to satisfy the amount of data required by these Technical Specifications.
11. The Contractor may furnish a weighmaster certificate accompanied by a separate certificate that lists the actual batch weights or measurements for a load of concrete provided that both certificates are imprinted with the same nonrepeating load number that is unique to the Contract and delivered to the jobsite with the load.
12. Weighmaster certificates shall conform to the provisions in Section 9-1.01, "Measurement of Quantities," of the Caltrans Standard Specifications.

D. Time or Amount Of Mixing

1. Mixing of concrete in paving or stationary mixers shall continue for the required mixing time after all ingredients, except water and admixture, if added with the water, are in the

DocuSign Envelope ID: 330DEBD6-9A9E-4F34-BDCC-1AC1BAA701E9

mixing compartment of the mixer before any part of the batch is released. Transfer time in multiple drum mixers shall not be counted as part of the required mixing time.

2. The required mixing time, in paving or stationary mixers, of concrete used for concrete structures, except minor structures, shall be not less than 90 seconds or more than 5 minutes, except that when directed by the Engineer in writing, the requirements of the following paragraph shall apply.
3. The required mixing time, in paving or stationary mixers, except as provided in the preceding paragraph, shall be not less than 50 seconds or more than 5 minutes.
4. The minimum required revolutions at the mixing speed for transit-mixed concrete shall be not less than that recommended by the mixer manufacturer, but in no case shall the number of revolutions be less than that required to consistently produce concrete conforming to the provisions for uniformity in Article 2.04A, "General," herein.
5. When a high range water-reducing admixture is added to the concrete at the job site, the total number of revolutions shall not exceed 300.

2.5 AGGREGATE GRADINGS

A. General

1. Before beginning concrete work, submit in writing to the Engineer the gradation of the primary aggregate nominal sizes that the Contractor proposes to furnish. If a primary coarse aggregate or the fine aggregate is separated into two or more sizes, the proposed gradation shall consist of the gradation for each individual size, and the proposed proportions of each individual size, combined mathematically to indicate one proposed gradation. The proposed gradation shall meet the grading requirements shown in the table in this Section, and shall show the percentage passing each of the sieve sizes used in determining the end result.
2. The Engineer may waive, in writing, the gradation requirements in Article 2.05A, "General," Article 2.05B, "Coarse Aggregate Grading," Article 2.05C, "Fine Aggregate Grading," and Article 2.05D, "Combined Aggregate Gradings," herein if, in the Engineer's opinion, furnishing the gradation is not necessary for the type or amount of concrete work to be constructed.
3. Gradations proposed by the Contractor shall be within the following percentage passing limits:

Primary Aggregate Nominal Size	Sieve Size	Limits of Proposed Gradation
1 1/2" x 3/4"	1"	19 - 41
1" x No. 4	3/4"	52 - 85
1" x No. 4	3/8"	15 - 38
1/2" x No. 4	3/8"	40 - 78
3/8" x No. 8	3/8"	50 - 85
Fine Aggregate	No. 16	55 - 75
Fine Aggregate	No. 30	34 – 46
Fine Aggregate	No. 50	16 - 29

4. Should the Contractor change the source of supply, submit in writing to the Engineer the new gradations before their intended use.

B. Coarse Aggregate Grading

1. The grading requirements for coarse aggregates are shown in the following table for each size of coarse aggregate:

	Percentage Passing Primary Aggregate Nominal Sizes							
	1 1/2" x 3/4"		1" x No. 4		1/2" x No. 4		3/8" x No. 8	
Sieve Sizes	Operating Range	Contract Compliance	Operating Range	Contract Compliance	Operating Range	Contract Compliance	Operating Range	Contract Compliance
2"	100	100	—	—	—	—	—	—
1 1/2"	88 - 100	85 - 100	100	100	—	—	—	—
1"	X ±18	X ±25	88 - 100	86 - 100	—	—	—	—
3/4"	0 - 17	0 - 20	X ±15	X ±22	100	100	—	—
1/2"	—	—	—	—	82 - 100	80 - 100	100	100
3/8"	0 - 7	0 - 9	X ±15	X ±22	X ±15	X ±22	X ±15	X ±20
No. 4	—	—	0 - 16	0 - 18	0 - 15	0 - 18	0 - 25	0 - 28
No. 8	—	—	0 - 6	0 - 7	0 - 6	0 - 7	0 - 6	0 - 7

2. In the above table, the symbol X is the gradation that the Contractor proposes to furnish for the specific sieve size as provided in Article 2.05A, "General," herein.
3. Coarse aggregate for the 1 1/2 inch, maximum, combined aggregate grading as provided in Article 2.05D, "Combined Aggregate Gradings," herein, shall be furnished in two or more primary aggregate nominal sizes. Each primary aggregate nominal size may be separated into two sizes and stored separately, provided that the combined material conforms to the grading requirements for that particular primary aggregate nominal size.
4. When the one inch, maximum, combined aggregate grading as provided in Article 2.05D, "Combined Aggregate Gradings," herein is to be used, the coarse aggregate may be separated into two sizes and stored separately, provided that the combined material shall conform to the grading requirements for the 1" x No. 4 primary aggregate nominal size.

C. Fine Aggregate Grading

1. Fine aggregate shall be graded within the following limits:

Sieve Sizes	Percentage Passing Operating Range	Contract Compliance
3/8"	100	100
No. 4	95 - 100	93 - 100
No. 8	65 - 95	61 - 99
No. 16	X ±10	X ±13
No. 30	X ±9	X ±12
No. 50	X ±6	X ±9
No. 100	2 - 12	1 - 15
No. 200	0 - 8	0 - 10

DocuSign Envelope ID: 330DEBD6-9A9E-4F34-BDCC-1AC1BAA701E9

2. In the above table, the symbol X is the gradation that the Contractor proposes to furnish for the specific sieve size as provided in Article 2.05A, "General," herein.
3. In addition to the above required grading analysis, the distribution of the fine aggregate sizes shall be such that the difference between the total percentage passing the No. 16 sieve and the total percentage passing the No. 30 sieve shall be between 10 and 40, and the difference between the percentage passing the No. 30 and No. 50 sieves shall be between 10 and 40.
4. Fine aggregate may be separated into two or more sizes and stored separately, provided that the combined material conforms to the grading requirements specified in this Section.

D. Combined Aggregate Gradings

1. Combined aggregate grading limits shall be used only for the design of concrete mixes. Concrete mixes shall be designed so that aggregates are combined in proportions that shall produce a mixture within the grading limits for combined aggregates as specified herein.
2. The combined aggregate grading, except when otherwise specified in these Technical Specifications, shall be either the 1 1/2 inch, maximum grading, or the 1 inch, maximum grading, at the option of the Contractor.

Grading Limits of Combined Aggregates

	Percentage Passing			
Sieve Sizes	1 1/2" Max.	1" Max.	1/2" Max.	3/8" Max.
2"	100	—	—	—
1 1/2"	90 - 100	100	—	—
1"	50 - 86	90 - 100	—	—
3/4"	45 - 75	55 - 100	100	—
1/2"	—	—	90 - 100	100
3/8"	38 - 55	45 - 75	55 - 86	50 - 100
No. 4	30 - 45	35 - 60	45 - 63	45 - 63
No. 8	23 - 38	27 - 45	35 - 49	35 - 49
No. 16	17 - 33	20 - 35	25 - 37	25 - 37
No. 30	10 - 22	12 - 25	15 - 25	15 - 25
No. 50	4 - 10	5 - 15	5 - 15	5 - 15
No. 100	1 - 6	1 - 8	1 - 8	1 - 8
No. 200	0 - 3	0 - 4	0 - 4	0 - 4

3. Changes from one grading to another shall not be made during the progress of the work unless permitted by the Engineer.

2.6 ADMIXTURES

A. General

1. Admixtures used in portland cement concrete shall conform to and be used in conformance with the provisions in this Article 2.06, “Admixtures,” herein. Admixtures shall be used when specified or ordered by the Engineer and may be used at the Contractor's option as provided herein.

DocuSign Envelope ID: 330DEBD6-9A9E-4F34-BDCC-1AC1BAA701E9

2. Chemical admixtures and air-entraining admixtures containing chlorides as Cl in excess of one percent by weight of admixture, as determined by California Test 415, shall not be used.
3. Admixtures shall be uniform in properties throughout their use in the work. Should it be found that an admixture as furnished is not uniform in properties, its use shall be discontinued.
4. If more than one admixture is used, the admixtures shall be compatible with each other so that the desirable effects of all admixtures used will be realized.
5. Chemical admixtures shall be used in conformance with the manufacturer's written recommendations.

B. Materials
1. Admixture materials shall conform to the provisions in Article 2.01H, "Concrete Admixtures," herein.

C. Admixture Approval
1. No admixture brand shall be used in the work unless it is on the California Department of Transportation (Caltrans) current list of approved brands for the type of admixture involved.
2. Admixture brands will be considered for addition to the approved list if the manufacturer of the admixture submits to the Engineer a sample of the admixture accompanied by certified test results demonstrating that the admixture complies with the requirements in the appropriate ASTM Standard and these Technical Specifications. The sample shall be sufficient to permit performance of all required tests. Approval of admixture brands will be dependent upon a determination as to compliance with the requirements, based on the certified test results submitted, together with tests the Engineer may require the Contractor to perform.
3. If the Contractor proposes to use an admixture of a brand and type on the current list of approved admixture brands, the Contractor shall furnish a Certificate of Compliance from the manufacturer, certifying that the admixture furnished is the same as that previously approved. If a previously approved admixture is not accompanied by a Certificate of Compliance, the admixture shall not be used in the work until the Independent Testing Agency has completed appropriate tests and the Engineer has approved the admixture for use. The Engineer may require the Independent Testing Agency to take samples for testing at any time, whether or not the admixture has been accompanied by a Certificate of Compliance.

D. Required Use of Chemical Admixtures: If the use of a chemical admixture is specified, the admixture shall be used at the dosage specified, except that if no dosage is specified, the admixture shall be used at the dosage normally recommended by the manufacturer of the admixture.

E. Optional Use of Chemical Admixtures
1. The Contractor may use Type A or F, water-reducing; Type B, retarding; or Type D or G, water-reducing and retarding admixtures as described in ASTM C494/C494M to conserve cementitious material or to facilitate any concrete construction application subject to the following conditions:
   a. If a water-reducing admixture or a water-reducing and retarding admixture is used, the cementitious material content specified or ordered may be reduced by a maximum of 5 percent by weight, except that the resultant cementitious material content shall be not less than 505 pounds per cubic yard; and

DocuSign Envelope ID: 330DEBD6-9A9E-4F34-BDCC-1AC1BAA701E9

b. When a reduction in cementitious material content is made, the dosage of admixture used shall be the dosage used in determining approval of the admixture.

2. Unless otherwise specified, a Type C accelerating chemical admixture conforming to ASTM C 494/C494M, may be used in portland cement concrete. Inclusion in the mix design submitted for approval will not be required provided that the admixture is added to counteract changing conditions that contribute to delayed setting of the portland cement concrete, and the use or change in dosage of the admixture is approved in writing by the Engineer.

F. Required Use of Air-Entraining Admixtures: When air-entrainment is specified or ordered by the Engineer, the air-entraining admixture shall be used in amounts to produce a concrete having the specified air content as determined by California Test 504.

G. Optional Use of Air-Entraining Admixtures: When air-entrainment has not been specified or ordered by the Engineer, the Contractor will be permitted to use an air-entraining admixture to facilitate the use of any construction procedure or equipment provided that the average air content, as determined by California Test 504, of three successive tests does not exceed 4 percent, and no single test value exceeds 5.5 percent. If the Contractor elects to use an air-entraining admixture in concrete for pavement, the Contractor shall so indicate at the time the Contractor designates the source of aggregate.

H. Proportioning and Dispensing Liquid Admixtures

1. Chemical admixtures and air-entraining admixtures shall be dispensed in liquid form. Dispensers for liquid admixtures shall have sufficient capacity to measure at one time the prescribed quantity required for each batch of concrete. Each dispenser shall include a graduated measuring unit into which liquid admixtures are measured to within ±5 percent of the prescribed quantity for each batch. Dispensers shall be located and maintained so that the graduations can be accurately read from the point at which proportioning operations are controlled to permit a visual check of batching accuracy prior to discharge. Each measuring unit shall be clearly marked for the type and quantity of admixture.

2. Each liquid admixture dispensing system shall be equipped with a sampling device consisting of a valve located in a safe and readily accessible position such that a sample of the admixture may be withdrawn slowly by the Engineer.

3. If more than one liquid admixture is used in the concrete mix, each liquid admixture shall have a separate measuring unit and shall be dispensed by injecting equipment located in such a manner that the admixtures are not mixed at high concentrations and do not interfere with the effectiveness of each other. When air-entraining admixtures are used in conjunction with other liquid admixtures, the air-entraining admixture shall be the first to be incorporated into the mix, unless it is demonstrated that a different sequence improves performance.

4. When automatic proportioning devices are required for concrete pavement, dispensers for liquid admixtures shall operate automatically with the batching control equipment. The dispensers shall be equipped with an automatic warning system in good operating condition that will provide a visible or audible signal at the point at which proportioning operations are controlled when the quantity of admixture measured for each batch of concrete varies from the preselected dosage by more than 5 percent, or when the entire contents of the measuring unit are not emptied from the dispenser into each batch of concrete.

5. Unless liquid admixtures are added to premeasured water for the batch, their discharge into the batch shall be arranged to flow into the stream of water so that the admixtures

are well dispersed throughout the batch, except that air-entraining admixtures may be dispensed directly into moist sand in the batching bins provided that adequate control of the air content of the concrete can be maintained.

6. Liquid admixtures requiring dosages greater than one-half gallon per cubic yard shall be considered to be water when determining the total amount of free water as specified in Article 2.08, "Amount of Water and Penetration," herein.

2.7 PROPORTIONING

A. Storage of Aggregates

1. Aggregates shall be stored or stockpiled in such a manner that separation of coarse and fine particles of each size shall be avoided and the various sizes shall not become intermixed before proportioning.
2. Aggregates shall be stored or stockpiled and handled in a manner that prevents contamination by foreign materials. In addition, storage of aggregates at batching or mixing facilities that are erected subsequent to the award of the Contract and that furnish concrete to the Project shall conform to the following:
   a. Intermingling of the different sizes of aggregates shall be positively prevented. Take the necessary measures to prevent intermingling. The preventive measures may include, but are not necessarily limited to, physical separation of stockpiles or construction of bulkheads of adequate length and height; and
   b. Contamination of aggregates by contact with the ground shall be positively prevented. Take the necessary measures to prevent contamination. The preventive measures shall include placing aggregates on wooden platforms or on hardened surfaces consisting of portland cement concrete, asphalt concrete, or cement treated material.
3. In placing aggregates in storage or in moving the aggregates from storage to the weigh hopper of the batching plant, any method that may cause segregation, degradation, or the combining of materials of different gradings that will result in any size of aggregate at the weigh hopper failing to meet the grading requirements, shall be discontinued. Any method of handling aggregates that results in excessive breakage of particles shall be discontinued. The use of suitable devices to reduce impact of falling aggregates may be required by the Engineer.

B. Proportioning Devices

1. Weighing, measuring, or metering devices used for proportioning materials shall conform to Section 9-1.01, "Measurement of Quantities," of the Caltrans Standard Specifications and this Article 2.07B, “Proportioning Devices.”
2. Proportioning devices shall be tested as frequently as the Engineer may deem necessary to ensure their accuracy.
3. Weighing equipment shall be insulated against vibration or movement of other operating equipment in the plant. When the plant is in operation, the weight of each batch of material shall not vary from the weight designated by the Engineer by more than the tolerances specified herein.
4. Equipment for cumulative weighing of aggregate shall have a zero tolerance of ±0.5 percent of the designated total batch weight of the aggregate. For systems with individual weigh hoppers for the various sizes of aggregate, the zero tolerance shall be ±0.5 percent of the individual batch weight designated for each size of aggregate. Equipment for cumulative weighing of cement and supplementary cementitious material shall have a zero tolerance of ±0.5 percent of the designated total batch weight of the

DocuSign Envelope ID: 330DEBD6-9A9E-4F34-BDCC-1AC1BAA701E9

cement and supplementary cementitious material. Equipment for weighing cement or supplementary cementitious material separately shall have a zero tolerance of ±0.5 percent of their designated individual batch weights. Equipment for measuring water shall have a zero tolerance of ±0.5 percent of its designated weight or volume.

5. The weight indicated for any batch of material shall not vary from the preselected scale setting by more than the following:
   a. Aggregate weighed cumulatively shall be within 1.0 percent of the designated total batch weight of the aggregate. Aggregates weighed individually shall be within 1.5 percent of their respective designated batch weights; and
   b. Cement shall be 99 to 102 percent of its designated batch weight. When weighed individually, supplementary cementitious material shall be 99 to 102 percent of its designated batch weight. When supplementary cementitious material and cement are permitted to be weighed cumulatively, cement shall be weighed first to 99 to 102 percent of its designated batch weight, and the total for cement and supplementary cementitious material shall be 99 to 102 percent of the sum of their designated batch weights; and
   c. Water shall be within 1.5 percent of its designated weight or volume.
6. Each scale graduation shall be approximately 0.001 of the total capacity of the scale. The capacity of scales for weighing cement, supplementary cementitious material, or cement plus supplementary cementitious material and aggregates shall not exceed that of commercially available scales having single graduations indicating a weight not exceeding the maximum permissible weight variation above, except that no scale shall be required having a capacity of less than 1,000 pounds, with one pound graduations.

C. Proportioning

1. Proportioning shall consist of dividing the aggregates into the specified sizes, each stored in a separate bin, and combining them with cementitious material and water as provided in these Technical Specifications. Aggregates shall be proportioned by weight.
2. At the time of batching, aggregates shall have been dried or drained sufficiently to result in a stable moisture content such that no visible separation of water from aggregate will take place during transportation from the proportioning plant to the point of mixing. In no event shall the free moisture content of the fine aggregate at the time of batching exceed 8 percent of its saturated, surface-dry weight.
3. Should separate supplies of aggregate material of the same size group, but of different moisture content or specific gravity or surface characteristics affecting workability, be available at the proportioning plant, withdrawals shall be made from one supply exclusively and the materials therein completely exhausted before starting upon another.
4. Bulk Type IP (MS) cement shall be weighed in an individual hopper and shall be kept separate from the aggregates until the ingredients are released for discharge into the mixer.
5. Bulk cement and supplementary cementitious material may be weighed in separate, individual weigh hoppers or may be weighed in the same weigh hopper and shall be kept separate from the aggregates until the ingredients are released for discharge into the mixer. If the cement and supplementary cementitious material are weighed cumulatively, the cement shall be weighed first.
6. If cement and supplementary cementitious material are weighed in separate weigh hoppers, the weigh systems for the proportioning of the aggregate, the cement, and the supplementary cementitious material shall be individual and distinct from all other weigh systems. Each weigh system shall be equipped with a hopper, a lever system, and an

indicator to constitute an individual and independent material-weighing device. The cement and the supplementary cementitious material shall be discharged into the mixer simultaneously with the aggregate.

7. The scales and weigh hoppers for bulk weighing cement, supplementary cementitious material, or cement plus supplementary cementitious material shall be separate and distinct from the aggregate weighing equipment.
8. For batches of one cubic yard or more, the batching equipment shall conform to one of the following combinations:
   a. Separate boxes and separate scale and indicator for weighing each size of aggregate.
   b. Single box and scale indicator for all aggregates.
   c. Single box or separate boxes and automatic weighing mechanism for all aggregates.
9. In order to check the accuracy of batch weights, the gross weight and tare weight of batch trucks, truck mixers, truck agitators, and non-agitating hauling equipment shall be determined when ordered by the Engineer. The equipment shall be weighed on scales designated by the Engineer.

2.8 AMOUNT OF WATER AND PENETRATION

A. The amount of water used in concrete mixes shall be regulated so that the penetration of the concrete as determined by California Test 533 or the slump of the concrete as determined by ASTM C143/C143M is within the nominal values shown in the following table. When the penetration or slump of the concrete is found to exceed the nominal values listed, the mixture of subsequent batches shall be adjusted to reduce the penetration or slump to a value within the nominal range shown. Batches of concrete with a penetration or slump exceeding the maximum values listed shall not be used in the work. If Type F or Type G chemical admixtures are added to the mix, the penetration requirements shall not apply and the slump shall not exceed 9 inches after the chemical admixtures are added.

Type of Work	Nominal Penetration	Slump	Maximum Penetration	Slump
Concrete Pavement	0 - 1	—	1 1/2	—
Non-reinforced concrete facilities	0 - 1 1/2	—	2	—
Reinforced concrete structures				
Sections over 12 inches thick	0 - 1 1/2	—	2 1/2	—
Sections 12 inches thick or less	0 - 2	—	3	—
Concrete placed under water	—	6 - 8	—	9
Cast-in-place concrete piles	2 1/2 - 3 1/2	5 - 7	4	8

B. The amount of free water used in concrete shall not exceed 310 pounds per cubic yard, plus 20 pounds for each required 100 pounds of cementitious material in excess of 550 pounds per cubic yard.

DocuSign Envelope ID: 330DEBD6-9A9E-4F34-BDCC-1AC1BAA701E9

C. The term free water is defined as the total water in the mixture minus the water absorbed by the aggregates in reaching a saturated surface-dry condition.

D. If there are adverse or difficult conditions that affect the placing of concrete, the above specified penetration and free water content limitations may be exceeded providing the Contractor is granted permission by the Engineer in writing to increase the cementitious material content per cubic yard of concrete. The increase in water and cementitious material shall be at a ratio not to exceed 30 pounds of water per added 100 pounds of cementitious material per cubic yard. Full compensation for additional cementitious material and water added under these conditions shall be considered as included in the Contract price paid for the concrete work involved and no additional compensation will be allowed therefor.

E. The equipment for supplying water to the mixer shall be constructed and arranged so that the amount of water added can be measured accurately. Any method of discharging water into the mixer for a batch shall be accurate within 1.5 percent of the quantity of water required to be added to the mix for any position of the mixer. Tanks used to measure water shall be designed so that water cannot enter while water is being discharged into the mixer and discharge into the mixer shall be made rapidly in one operation without dribbling. All equipment shall be arranged so as to permit checking the amount of water delivered by discharging into measured containers.

PART 3 – EXECUTION

3.1 FIELD QUALITY CONTROL

A. Contractor Quality Control:

1. Cooperate with and notify the Engineer at least 48 hours in advance of sampling, tests and inspections, being performed by the Independent Testing Agency. The Engineer may elect to observe these procedures.
2. Inspection and Testing Services:
   a. The Independent Testing Agency shall perform sampling, testing and inspections in accordance with the provisions in Section 99-033000, Cast-in-Place Concrete and these Technical Specifications.

B. Engineer Quality Assurance:

1. The Engineer will monitor the implementation of the Contractor's quality control programs through observation, inspection, sampling and testing in accordance with Part 6 of the Special Provisions.

3.2 MORTAR

A. Mortar shall be composed of Portland cement, sand, and water proportioned and mixed as specified herein.

B. Mortar shall be furnished and placed in recesses and holes, on surfaces, under structural members, and at other locations specified in these Technical Specifications, or shown on the Contract Drawings.

C. The proportion of cement to sand, measured by volume, shall be 1 to 2 unless otherwise specified.

D. Materials shall conform to the provisions in Article 2.01, "Materials," herein.

E. The maximum size of sand shall be not larger than 0.5 of the size of the recess, hole or space where the mortar is to be placed.

F. The mortar shall contain only enough water to permit placing and packing.

G. Concrete areas to be in contact with the mortar shall be cleaned of all loose or foreign material that would in any way prevent bond between the mortar and the concrete surfaces and shall be

DocuSign Envelope ID: 330DEBD6-9A9E-4F34-BDCC-1AC1BAA701E9

flushed with water and allowed to dry to a surface dry condition immediately prior to placing the mortar.

H. The mortar shall completely fill and shall be tightly packed into recesses and holes, on surfaces, under structural members, and at other locations specified. After placing, all surfaces of mortar shall be cured by the water method for a period of not less than three days.

I. Keyways, spaces between structural members, holes, spaces under structural members and other locations where mortar could escape shall be mortar-tight before placing mortar.

J. No load shall be allowed on mortar that has been in place less than 72 hours, unless otherwise permitted by the Engineer.

K. All improperly cured or otherwise defective mortar shall be removed and replaced by the Contractor.

END OF SECTION

DocuSign Envelope ID: 330DEBD6-9A9E-4F34-BDCC-1AC1BAA701E9

SECTION 99-031100
CONCRETE FORMING

PART 1 – GENERAL

1.1 SECTION INCLUDES

A. Layout of formwork.
B. Formwork construction.
C. Embedded items and openings in concrete.
D. Form release materials.
E. Removal of forms.
F. Field quality control.
G. Detection of movement.
H. Re-use of forms.

1.2 RELATED SECTIONS

A. Finishes for formed surfaces are specified in Section 99-033501, Concrete Finishing.

1.3 REFERENCES

A. American Concrete Institute (ACI):
   1. ACI 117 Standard Specifications for Tolerances for Concrete Construction and Materials
   2. ACI 301 Standard Specifications for Structural Concrete
   3. ACI 318 Building Code Requirements for Structural Concrete
   4. ACI 347 Formwork for Concrete
B. American Plywood Association (APA):
   1. U.S. Product Standard PS 1 for Construction and Industrial Plywood
C. Federal Specifications (FS):
   1. TT-S-230 Sealing Compound: Elastomeric Type, Single Component, (for Calking, Sealing, and Glazing in Buildings and Other Structures)
   2. TT-S-1543 Sealing Compound: Silicone Rubber Base (For Calking, Sealing, and Glazing in Buildings and Other Structures)
D. West Coast Lumber Inspection Bureau (WCLB):
   1. WCLB No. 17 Standard Grading Rules

1.4 QUALITY ASSURANCE

A. Formwork Standards: Unless otherwise indicated, design, construct, erect, maintain, and remove forms and related structures for concrete work in accordance with applicable requirements of ACI 301, ACI 318, and ACI 347.
   1. Architectural Concrete: Forms for architectural concrete shall be designed and constructed in accordance with ACI 301.
   2. Deflection: Where dead and live loads on forms will be more than 20 percent greater than the weight of the concrete, provide framing lumber of required strength, and comply with ACI 301 and ACI 347 for design of framing members. Deflection shall be kept within the herein specified tolerances.
   3. Concrete Mix Design: Design of formwork shall be coordinated with the concrete mix design, as specified in Section 99-030515 - Portland Cement Concrete, so that form

DocuSign Envelope ID: 330DEBD6-9A9E-4F34-BDCC-1AC1BAA701E9

materials, form surfaces, and formwork strength will produce the desired concrete tolerances and finishes.

B. Formwork Surface Materials: Provide material and work quality which will produce clean and uniform finished surfaces within the allowable tolerances specified and which will conform with the following requirements:
   1. Concrete Exposed to View: Provide material and work quality that will produce clean, smooth, and uniform concrete surfaces. Refer to Section 99-033500, Concrete Finishing, and ACI 301 for requirements.
   2. Concrete Concealed from View: Provide material and work quality that will produce aligned concrete surfaces free of fins, honeycomb, and stains.

C. Special Formwork Sections: Provide openings, offsets, sinkages, keyways, recesses, moldings, rustication strips, chamfers, blocking, screeds, bulkheads, anchorages, embedded items, and other features. Select materials and provide workmanship that will ensure indicated finishes.

D. Chamfered Corners: All external corners shall be chamfered, unless otherwise indicated.

E. Removal Features: Design formwork to be readily removable without impact, shock, and damage to concrete surfaces and adjacent materials.

F. Tolerances for Formed Surfaces: For buildings and similar structures, comply with the requirements of ACI 301, as applicable. For those items of work or parts of the structure not covered by ACI 301, comply with the requirements of ACI 117, as applicable. Coordinate with the requirements specified in Section 99-033000, Cast-In-Place Concrete.

1.5 SUBMITTALS

A. General: Refer to Section GC-43 Submittal of Shop Drawings, Product Data and Samples, for submittal requirements and procedures. For formwork submittals involving shoring or falsework, comply with requirements specified in Section 99-031100 Concrete Forming.

B. Shop Drawings: Submit drawings that indicate and include the following details and requirements:
   1. Forming system and method of erection with associated details.
   2. Shoring accompanied by design calculations. Include reshoring procedures. Both drawings and calculations shall be signed by an engineer who is currently registered as a civil or structural engineer in the State of California. Coordinate with Section 99-031100 Concrete Forming.
   3. Locations of construction joints in plan and elevation views.
   4. Locations and sizes of conduits, openings, recesses, pipes, ducts, and other attached or embedded products.
   5. Beam intersections and other conditions where concrete casting by vertical drop may be restricted.
   6. Chamfer strips for corner treatment.
   7. Method and schedule for removing forms and shoring.
   8. Method for detecting formwork movement during concrete placement.

C. Product Data: Submit manufacturers' product data for manufactured products.

D. Samples: Submit form material, 12 inches by 12 inches or larger in size, for formed concrete which will be exposed in the finished work to public view. Such samples require approval of the Engineer before they may be used in the work.

1.6 DELIVERY, STORAGE, AND HANDLING

A. Storage: Store form panels to prevent warpage. Protect panels from damage and contamination which could adversely affect concrete.

B. Handling: Lift form panels by methods that will protect panels from damage and distortion.

DocuSign Envelope ID: 330DEBD6-9A9E-4F34-BDCC-1AC1BAA701E9

1.7 JOB CONDITIONS

A. Allow sufficient time between erection of forms and placing of concrete for the various trades to properly install concrete reinforcement, embedded items, sleeves, and blockouts.

B. Do not apply superimposed loads to the structure until concrete has developed its specified 28-day compressive strength.

PART 2 - PRODUCTS

2.1 MATERIALS

A. Lumber: Boards and framing lumber shall be graded and grade-marked in accordance with WCLB No. 17. Provide framing lumber of required strength, conforming with the above-specified WCLB No. 17.

1. Boards: Provide all West Coast Species, "Construction" or "Standard" Boards. Use dressed side of lumber for surface in contact with the concrete, and provide boards with dressed or tongue-and-groove edges to provide tight joints to prevent mortar leakage.
2. Framing Lumber:

a. Light Framing: Provide all West Coast Species, "Construction" or "Standard" Light Framing, dressed or rough. Where loads are not a factor, "Utility" Light Framing will be acceptable.

b. Joists and Planks: Provide all West Coast Species, "No. 2" Structural Joists and Planks, dressed or rough.

c. Beams and Stringers: Provide all West Coast Species, "Standard" Beams and Stringers or "No. 2 Structural" Beams and Stringers, dressed or rough.

B. Plywood (Plyform): Plywood shall be graded and grade-marked in accordance with U.S. Product Standard PS-1.

1. B-B Plyform: Provide Class I, EXT-APA, sanded, APA trade marked.
2. B-C Plyform: Provide Class I, EXT-APA, APA trade marked.
3. High Density Overlay (HDO) Plyform: Provide A-A, 60-60, Class I, EXT-APA, APA trade marked.
4. Thickness: As required to maintain surface smoothness without deflection, but not thinner than 5/8 inch.

C. Steel Forms: Proprietary, patented, or fabricated steel forms, using standard or commercial quality, uncoated steel sheet or plate, 3/16-inch minimum thickness, for panel facings. Provide surfaces that will not impart corrosion residue to concrete. Include panel framing, reinforcement, and erection accessories.

D. Waffle Slab Forms: Steel or reinforced plastic dome forms for two-way joist construction, smooth surface, of sizes indicated.

E. Round Column Forms: Pressed or molded fiber-reinforced plastic or steel, manufactured round column forms, seamless or one-piece (one vertical seam), smooth surface, of sizes indicated.

1. Provide forms with will not deflect under pressure of concrete placement, and which will not deflect or blow off under added pressure of placement of fly-ash-modified concrete.

F. Formliners for Exposed and Architectural Concrete: Thermally formed, pressed or molded fiber-reinforced plastic (FRP), ABS alloy plastic, PVC alloy plastic, or similar material, manufactured to produce finished concrete of design, configuration, and surface texture indicated. Formliners shall be continuous, one piece. No horizontal joints shall be acceptable unless the applicable height exceeds the available formliner height. Provide formliners with inherent form-release surface. Formliners may be manufactured for single-use or multi-use service as appropriate.

DocuSign Envelope ID: 330DEBD6-9A9E-4F34-BDCC-1AC1BAA701E9

G. Leakage Control Materials: Provide materials capable of producing flush, watertight, and nonabsorbent surfaces and joints, and compatible with forming material and concrete ingredients. Seal form edges with gasketing material or sealant placed in the joint in such a way that neither a fin nor groove is made in the face of the cast concrete.
   1. Calking Compound: Silicone or polyurethane construction sealant conforming to FS TT-S-230 or TT-S-1543, as applicable.
   2. Tapes: Form film tape of polypropylene plastic treated with waterproof adhesive, for joint conditions not exposed to public view.

H. Form Release Agent: Commercial formulation, silicone-free form-release agent, designed for use on all types of forms, which will not bond with, stain, nor adversely affect concrete surfaces, and which will not impair subsequent treatment of concrete surfaces requiring bond or adhesion nor impede wetting of surfaces which will be cured with water, steam, or curing compounds.

I. Plugged Cone Form Ties: Rod type, with ends or end fasteners which can be removed without spalling the concrete and which leave a hole equal in depth to the required reinforcement clearance. Form ties shall be of a design in which the hole left by the removed end or end fastener is easily filled to match the surface of the hardened concrete. Provide removable cones 1-1/4 inches in diameter by 1-1/2 inches deep. Provide preformed mortar plugs to match the color of the concrete, recessed 1/4 inch, adhered with an approved epoxy adhesive.

J. Inserts: Cast stainless steel or welded stainless steel, Type 316 or similar 300 Series, complete with anchors to concrete and fittings such as bolts, wedges, and straps. Provide hanger inserts spaced to match grid of suspended ceiling.

K. Dovetail Anchor Slots: 22 gage or heavier galvanized steel dovetail anchor slots, for anchoring of masonry veneer with galvanized steel dovetail anchors provided under Division 4, Masonry.

L. Chamfer Strips: 3/4 inch by 3/4 inch triangular fillets milled from clear, straight-grain pine, surfaced each side, or extruded vinyl type with or without nailing flange.

M. Miscellaneous Joint Strips: Preformed strips for reveals, rustications, and similar joints fabricated of wood, metal, or plastic.

2.2 FABRICATION

A. Formwork - General: Fabricate forms in accordance with approved Shop Drawings. Maintain forms clean, smooth, and free from imperfections and distortion. Fabricate forms for architectural concrete in accordance with applicable requirements of ACI 301.

B. Joints:
   1. Arrange form panels in symmetrical patterns conforming to general lines of the structure.
   2. Unless otherwise indicated, orient panels on vertical surfaces with long dimension horizontal, and make horizontal joints level and continuous.
   3. Align form panels on each side of the panel joint with fasteners common to both panels, and in a manner which will result in a continuous, unbroken concrete plane surface.

C. Steel Forms: Use material which is clean, smooth, and free from warps, bends, kinks, rust, cracks, and matter which may stain concrete. Fabricate panels in accordance with approved Shop Drawings. Deflection between form supports from concrete placement shall not exceed 1/240 of the span length.

PART 3 - EXECUTION

3.1 LAYOUT OF FORMWORK

A. Locate and stake out all forms and establish all lines, levels, and elevations.

DocuSign Envelope ID: 330DEBD6-9A9E-4F34-BDCC-1AC1BAA701E9

3.2 CONSTRUCTION

A. Formwork:

1. Construct formwork in accordance with the approved Shop Drawings, and in a manner that will produce finished concrete surfaces conforming to indicated design and within specified tolerances. Formwork for concrete not exposed to view in the finished work may be constructed of any material that will adequately support the weight of the concrete.
2. Make joints and seams mortar-tight. Install leakage control materials in accordance with the manufacturer's installation instructions, and in a manner that will maintain a smooth continuity of plane between abutting form panels and which will resist displacement by concreting operations.
3. Kerf wood inserts for forming keyways, reglets, and recesses in a manner that will prevent swelling and ensure ease of removal.
4. Maintain forms clean and free from indentations and warpage. Do not use rust-stained steel surfaces for forms in contact with concrete. Do not sandblast steel form surfaces to remove rust or mill scale; remove these imperfections by grinding.
5. Brace temporary closures to prevent warpage or displacement and set tightly against forms in a manner that will prevent loss of concrete mortar.
6. Support joints with extra studs or girts, and in a manner that will ensure true, square intersections.
7. Assemble forms in a manner that will facilitate their removal without damage to the concrete.
8. Construct molding shapes, recesses, and projections with smooth finish materials and install in forms with sealed joints.
9. Provide camber in formwork as required to compensate for deflections caused by weight and pressures of fresh concrete and construction loads and as otherwise indicated. Provide camber strips to compensate for deflections due to permanent loads and long-term deflections due to shrinkage and creep as required.
10. Provide construction openings in forms where required for concrete pour pockets, vibrator access holes, and inspection openings to aid in proper placement and consolidation of concrete, and close up openings during placement of concrete as applicable.
11. Provide inspection and cleanout openings in forms at bottom of walls and columns and elsewhere as required. Do not close cleanouts until inspected and accepted by the Engineer just before placing concrete.
12. Drill air escape holes in bottom members of blockouts.
13. Ensure that formed stair risers within a stair run are equal.

B. Edge Forms and Screeds for Slabs: Set edge forms or bulkheads and intermediate screeds for slabs to obtain required elevations and contours in the finished slab surface. Support screeds substantially without penetrating waterproof membranes and vapor barriers.

C. Corner Treatment: Form chamfers with 3/4 inch on each leg, unless otherwise indicated, and accurately shape and surface in a manner which will produce uniformly straight lines and edge joints and which will prevent mortar runs. Extend terminal edges to limits, and miter chamfer strips at changes in direction.

D. Construction Joints:

1. Locate joints as indicated. Support forms for joints in concrete so as to rigidly maintain their positions during placement, vibration, and curing of concrete. Install keys in all joints.

DocuSign Envelope ID: 330DEBD6-9A9E-4F34-BDCC-1AC1BAA701E9

2. Locate and install construction joints, for which locations are not indicated, so as not to impair strength and appearance of the structure, and indicate such joints on Shop Drawings. Locations of construction joints require approval of the Engineer.
3. Position joints perpendicular to longitudinal axis of pier, beam, or slab as the case may be.
4. Locate joints in walls, vertically as indicated; at top of footing; at top of slabs on grade; at bottom of door openings; and at underside of the deepest beam or girder framing into wall; or as required to conform to indicated details.
5. Provide keyways as indicated in construction joints in walls and slabs, and between walls and footings unless otherwise indicated. Place construction joints perpendicular to the main reinforcement. Continue reinforcement across construction joints.

E. Load Supports: Loads for construction of roof slab and suspended floor slabs shall be carried down to on-grade base slabs. These loads shall not be carried by intermediate slabs at any time. Formwork loads shall be carried only by structural elements that are supported directly by footings.

3.3 EMBEDDED ITEMS AND OPENINGS IN CONCRETE

A. Install conduit, pipe sleeves, waterstops, appliance boxes, frames for items recessed in walls, door frames, drains, metal ties, inserts, nailing strips, blocking, grounds, and other fastening devices required for anchorage or attachment of other work. Firmly secure products in position, located accurately as indicated, before beginning concrete placement.

B. Provide openings in concrete for passage of ducts, and provide clearances therefor as indicated on approved Shop Drawings.

C. Where masonry walls will be tied to concrete construction in future construction, use dovetail anchor slots positioned for maximum flexibility for masonry installation.

3.4 FORM RELEASE MATERIAL

A. Coat form contact surfaces with approved form release material before reinforcement is placed. Do not allow excess form release material to accumulate in the forms or to come into contact with surfaces that are required to be bonded to fresh concrete such as concrete reinforcement and embedded items. Apply form release material in compliance with manufacturer's application instructions.

B. Coat steel forms with non-staining, rust-preventive form release material or otherwise protect against rusting.

C. Apply form release material to bolts and rods that are to be removed or that are to be free to move.

3.5 REMOVAL OF FORMS

A. Remove forms by methods which will not injure, mar, gouge, or chip concrete surfaces, overstress concrete members, or distort formwork. Use air pressure or other approved methods. Do not pry against concrete. Cut off nails flush. Leave surfaces clean and unblemished.

1. Where early form removal is not necessary and will not impact the Contractor's schedule, leave forms in place at least 72 hours, unless otherwise approved by the Engineer.

B. When repair of surface defects or finishing is required at an early age, forms may be removed as soon as the concrete has hardened sufficiently to resist damage from removal operations and its own weight.

DocuSign Envelope ID: 330DEBD6-9A9E-4F34-BDCC-1AC1BAA701E9

1. Concrete work that is damaged by removal operations shall be repaired as specified in Section 99-033501, Concrete Finishing. Where exposed surfaces are damaged beyond acceptable repairing measures, the damaged concrete shall be removed and replaced with new concrete.

C. Top forms on sloping surfaces of concrete may be removed as soon as the concrete has attained sufficient stiffness to prevent sagging. Any needed repairs or treatment required on such sloping surfaces shall be performed at once and shall be followed by the specified curing.

D. Wood forms for wall openings shall be loosened as soon as this can be accomplished without damage to the concrete.

E. Formwork for columns, walls, sides of beams, and other parts not supporting the weight of the concrete may be removed as soon as the concrete has hardened sufficiently so as not to be damaged by removal operations.

F. Forms and shoring in the formwork used to support the weight of concrete in beams, suspended slabs, girders, and other structural members shall remain in place until the concrete has reached adequate strength and stiffness to support itself. Forms shall not be removed before the concrete has reached a minimum of 70 percent of the indicated design compressive strength, unless otherwise approved in writing by the Engineer.

G. When shores and other vertical supports are so arranged that the non-load-carrying form-facing material may be removed without loosening or disturbing the shores and supports, the facing material may be removed at an earlier age provided the concrete surfaces are not damaged by such earlier removal.

H. Plan reshoring operations in a manner that will ensure that areas of new construction will not be required to support their own weight. Reshoring shall be in place before shoring is removed. During reshoring, do not permit live loads on new construction. Do not locate reshores in a manner and location that will overstress members or induce tensile stresses where reinforcing bars have not been provided.

I. When removal of formwork or reshoring is based on the concrete reaching a specified strength, the concrete shall be presumed to have reached this strength when test cylinders, field cured along with the concrete they represent, have reached the strength specified for removal of formwork or reshoring. Except for the field curing and age at test, the cylinders shall be molded and tested as specified in Section 99-030515, Portland Cement Concrete.

3.6 FIELD QUALITY CONTROL

A. Before placing concrete, check lines and grades of erected formwork and positioning of embedded inserts, blockouts, and joints for correctness. Verify that embedded piping and conduit are free from obstructions. Make corrections or adjustments to ensure proper size and location of concrete members and stability of forming systems.

B. While placing concrete, provide quality control to assure that formwork and related supports have not been displaced, that loss of cement paste through joints is prevented, and that completed work will be within specified tolerances.

C. During form removal, verify that architectural features meet the form and texture requirements of the samples approved by the Engineer.

3.7 DETECTION OF MOVEMENT

A. Check movement using methods, such as plumb lines, tell tales, and survey equipment, to detect movement of formwork during concrete placement.

3.8 RE-USE OF FORMS

DocuSign Envelope ID: 330DEBD6-9A9E-4F34-BDCC-1AC1BAA701E9

A. Clean and repair surfaces of forms to be reused in the work. Split, frayed, delaminated, or otherwise damaged form facing material will not be acceptable. Remove such material from the site. Apply form release coating as specified for new formwork.

B. Align and secure joints in a manner that will preclude offsets. Do not use patched forms for exposed concrete surfaces.

END OF SECTION

DocuSign Envelope ID: 330DEBD6-9A9E-4F34-BDCC-1AC1BAA701E9

SECTION 99-031500
CONCRETE ACCESSORIES

PART 1 – GENERAL

1.1 SECTION INCLUDES

A. Joint fillers.
B. Joint sealing compound.
C. Elastomeric joint seals.
D. Plastic pads, spacers, and fillers.

1.2 RELATED SECTIONS

A. Metal stair nosings, armor protection for concrete edges, metal anchors, inserts, sleeves, and various metal accessories related to cast-in-place concrete work are specified in Section 99-055000, Metal Fabrications.

1.3 REFERENCES

A. American Society for Testing and Materials (ASTM):
   1. ASTM C272 Test Method for Water Absorption of Core Materials for Structural Sandwich Constructions
   2. ASTM C578 Specification for Rigid, Cellular Polystyrene Thermal Insulation
   3. ASTM D994 Specification for Preformed Expansion Joint Filler for Concrete (Bituminous Type)
   4. ASTM D1190 Specification for Concrete Joint Sealer, Hot-Applied Elastic Type
   5. ASTM D1621 Test Method for Compressive Properties of Rigid Cellular Plastics
   6. ASTM D1622 Test Method for Apparent Density of Rigid Cellular Plastics
   7. ASTM D1751 Specification for Preformed Expansion Joint Filler for Concrete Paving and Structural Construction (Nonextruding and Resilient Bituminous Types)
   8. ASTM D2628 Specification for Preformed Polychloroprene Elastomeric Joint Seals for Concrete Pavements
   9. ASTM D3405 Specification for Joint Sealants, Hot-Applied, for Concrete and Asphalt Pavements
   10. ASTM D3406 Specification for Joint Sealant, Hot-Applied, Elastomeric-Type, for Portland Cement Concrete Pavements
   11. ASTM D3542 Specification for Preformed Polychloroprene Elastomeric Joint Seals for Bridges
   12. ASTM E84 Test Method for Surface Burning Characteristics of Building Materials
B. State of California, Department of Transportation (Caltrans), Standard Specifications (2010)
   1. Section 51-2.02 Sealed Joints

1.4 SUBMITTALS

A. General: Refer to Section GC-43, Shop Drawings, Product Data, and Samples, for submittal requirements and procedures.
B. Shop Drawings: Submit drawings showing locations of all joints to be filled and sealed.
C. Product Data: Submit manufacturers' product data of joint fillers, sealing compounds, elastomeric joint seals, and plastic materials, verifying compliance with specified requirements.

DocuSign Envelope ID: 330DEBD6-9A9E-4F34-BDCC-1AC1BAA701E9

D. Samples: Submit 36-inch long sample of joint filler and elastomeric joint seals and one pint can of sealing compound.

E. Certificates of Compliance: Submit certificates of compliance for sealed joints at bridge per Caltrans Standard Specifications, Section 51-2.02 Sealed Joints

PART 2 - PRODUCTS

2.1 MATERIALS

A. Joint Filler: Premolded, of sizes and thickness indicated, conforming to ASTM D994 or ASTM D1751, as applicable.

1. For structural joints and joints subject to movement, provide elastomeric joint seals conforming to ASTM D2628 or ASTM D3542, as applicable.

B. Joint Sealing Compound: Concrete joint sealant, conforming to ASTM D1190, ASTM D3405, or ASTM D3406, as applicable, for sealing of expansion (isolation) and contraction (control) joints in slabs and at junctions of slabs and vertical surfaces.

Color of joint sealant shall be as selected by the Engineer from manufacturer's standards.

1. For asphalt pavements, provide ASTM D3405 sealant only. For concrete pavements and roadways, provide ASTM D3406 sealant only.

C. Elastomeric Joint Seals: Preformed solid or multi-web design, virgin crystalization-resistant polychloroprene (neoprene) conforming with ASTM D2628 or ASTM D3542, as applicable. Seals shall be designed to function in a compressed installation mode.

1. Lubricant Adhesive: ASTM D2628 or ASTM D3542, as applicable.

D. Plastic Pads, Spacers, and Fillers: Extruded closed-cell polystyrene rigid board meeting requirements of ASTM C578, Type V, with the following physical properties:

1. Minimum weight and density when tested in accordance with ASTM D1622: 3.0 pounds per cubic foot.
2. Minimum compressive strength when tested in accordance with ASTM D1621: 100 pounds per square inch.
3. Maximum water absorption when tested in accordance with ASTM C272: 0.10 percent by volume.
4. Maximum allowable flame spread when tested in accordance with ASTM E84: 10 flame-spread index (UBC Class I).

PART 3 - EXECUTION

3.1 EXAMINATION

A. Verify that joint surfaces are dry to the extent necessary for successful sealant application and long service life as recommended by the sealant manufacturer.

B. Verify also that ambient and concrete-surface temperatures and humidity are within the ranges recommended by the manufacturer for successful sealant application.

3.2 PREPARATION

A. Thoroughly clean joints free of dirt, debris, dust, and laitance.

B. Prime joint surfaces, where required, as recommended by the manufacturer of the joint sealing compound or elastomeric joint seal, as applicable.

C. Mix multi-component sealing compound as recommended by the manufacturer.

DocuSign Envelope ID: 330DEBD6-9A9E-4F34-BDCC-1AC1BAA701E9

3.3 INSTALLATION

A. Installation/Application Requirements: Joint fillers and sealing compounds shall be installed in accordance with the respective manufacturers' installation and application instructions. Comply also with ASTM D1190, ASTM D3405, Appendix XI., and ASTM D3406, Appendix XI., for application of sealants, as applicable. Coordinate the placement of joint fillers and securing them in position with the work of Section 99-031100, Concrete Forming.

B. Expansion (Isolation) Joints:

1. Provide premolded joint filler to full depth of slabs, less 1/2 inch. Install joint filler with top edge 1/2 inch below the surface, and tool adjacent concrete edges to a 1/4-inch radius. Use steel pins to hold material in place during placing and floating of concrete. Finished joints shall be tight and leakproof.
2. After a minimum of 28 days after slabs have been placed and finished, fill expansion joints with joint sealing compound to 1/8 inch below surface of slabs. No traffic shall be permitted to travel over sealed joints until sealing compound has properly cured.

C. Contraction (Control) Joints: Saw-cut contraction joints and weakened plane joints shall be filled with joint sealing compound in areas and locations indicated. Joints shall be filled and tooled flush to within 1/16 inch of the slab surface.

END OF SECTION

DocuSign Envelope ID: 330DEBD6-9A9E-4F34-BDCC-1AC1BAA701E9

SECTION 99-032520

ANCHORS AND DOWELS IN RESIN

PART 1 - GENERAL

1.1 SECTION INCLUDES

A. Construction: Provide material, labor, equipment, services, tests and inspections necessary for the installation of post-installed railing anchors and dowels in resin.

1.2 RELATED INFORMATION AND REQUIREMENTS

A. Drawings and general provisions of the Contract, including general conditions and Parts 1 through 7 of the Special Provisions Sections, and all other Specification Sections apply to this Section.

1.3 REFERENCE DOCUMENTS

A. Standards: Comply with the provisions of the documents listed below and with the requirements described in this Section. Use current editions of documents unless earlier editions are specifically referenced by the governing code or are otherwise indicated.
   1. CBC – 2013 California Building Code.
   2. ACI 355.2 American Concrete Institute, “Qualification of Post-Installed Mechanical Anchors in Concrete and Commentary”
   3. ASTM - American Society for Testing and Materials, designations referenced herein.
   4. ICC-ES, International Code Council Evaluation Services; Evaluation Service Reports (ESRs) referenced herein.
   5. IAPMO-UES, International Association of Plumbing and Mechanical Officials, Uniform Evaluation Service; alternate Evaluation Reports (ERs) referenced herein

1.4 SUBMITTALS

A. General: Submittals shall be sent to the Owner’s Representative, as required herein for review prior to commencing the work. Review of submittals covers the general character of the details and to verify compliance with the performance requirements. Review does not cover checking of quantities, proportions or dimensions. Such review shall not relieve the Contractor from responsibility for executing the work in accordance with the Contract Documents.

B. Manufacturer's Data: The Contractor shall submit the manufacturer’s ICC-ES or IAPMO-UES report to the Owner’s Representative for review.

1.5 TESTS AND INSPECTIONS

A. Notification:
   1. The Contractor shall notify the Owner’s Testing Agency of work to be tested and inspected. Notification shall be sufficiently in advance to allow scheduling of tests and inspections, but not less than 24 hours.
   2. The Contractor shall immediately notify the Owner’s Representative if the Owner’s Testing Agency indicates that quality assurance tests and inspection requirements have not been met.

B. Owner’s Quality Assurance Tests and Inspections:
   1. General: Quality assurance tests and inspections shall be the responsibility of the Owner. The Owner shall retain a testing agency, referred to herein as the Owner’s Testing Agency, who shall perform the required tests and inspections, prepare written summary reports of tests and inspections, and review submittals.
   2. The Owner’s Testing Agency shall provide special inspection to verify compliance with the specifications and the product’s ICC-ES or IAPMO-UES report the for following items:
      a. Drill type, bit, bit diameter and setting.
      b. Hole diameter, depth, and accuracy of location.
      c. Cleanliness and surface preparation of holes.

DocuSign Envelope ID: 330DEBD6-9A9E-4F34-BDCC-1AC1BAA701E9

d. Anchor and dowel type, material, diameter, and length.
e. Mixing and placing of resin.
f. Expiration date of resin
g. Placement of anchors and dowels in the resin-filled holes.

3. The Owner's Testing Agency shall conduct static tension load tests on installed anchor and dowel. Test 10% of each diameter of anchors and dowels, or test as scheduled on the Drawings. Tests shall be in accordance with ASTM E 488, "Standard Test Methods for Strength of Anchors in Concrete and Masonry Elements".
   a. Tension load tests shall not begin prior to manufacturer's recommended full cure time after installation based on temperature/cure time guidelines by manufacturer.
   b. Scheduled test loads shall be applied 15seconds with no allowable slip.
   c. If an anchor or dowel fails a tension load test, additional dowels or anchors shall be tested until 20 consecutively successful tests have been performed.
   d. Provide tension load tests for replacement anchors and dowels.
   e. The Owner's Testing Agency shall develop and utilize an effective method of field marking locations and results of tension load tests.
      1) Field marking for test locations shall not affect exposed concrete appearance.
      2) A detailed drawing record of test locations and results shall be acceptable.

PART 2 - PRODUCTS

2.1 MATERIALS

A. Resin adhesives for anchors and dowels in normal weight and lightweight concrete:
   1. Hilti Corporation's "HIT-RE 500-SD" (ICC-ES Report No. ESR-2322).
   2. Simpson Strong-Tie's "SET-XP Adhesive" (ICC-ES Report No. ESR-2508).
   3. Equivalent subject to review and approval by Engineer

B. Dowel reinforcement bars (dowels) shall be as specified in Section titled "Concrete Reinforcement".

C. Threaded rod (anchors), washers, and nuts shall be as specified under Section 52 of the Caltrans Standard Specifications.

D. Patching Mortar: BASF's "EMACO S66 CI", Sika Corporation's "SikaRepair 223", Simpson Strong-Tie's FX-263 or equal.

PART 3 - EXECUTION

3.1 PROTECTION OF MATERIALS

A. Protect materials from damage, weather, and contaminants such as grease, oil, and dirt.

3.2 LAYOUT

A. Inspect areas to be drilled to verify conditions of access, interferences, and existing materials.
   1. Verify location of reinforcement in areas to be drilled using non-destructive methods. Contractor shall use care and caution to avoid cutting or damaging reinforcement. Maintain a minimum clearance of one inch between reinforcement and anchors or dowels, unless otherwise shown on the Drawings.

3.3 TOLERANCES

A. Anchor hole locations shall conform to tolerances for the material being attached.

3.4 DRILLING AND PREPARATION OF HOLES

A. Holes shall not be drilled in concrete that has not achieved its specified compressive strength and not until a minimum of seven days after concrete has been cast.

B. Holes shall be drilled using the manufacturer's recommended drill type, diameter, bit, and setting, unless otherwise noted on the drawings.

DocuSign Envelope ID: 330DEBD6-9A9E-4F34-BDCC-1AC1BAA701E9

C. Hole diameter shall be as indicated by the manufacturer. Depth of hole shall be as indicated on the Drawings; however, in no case shall the embedment of anchors or dowels be less than the minimum depth required by the manufacturer.

D. Where drilling causes the concrete to spall or crack, the holes shall be considered defective work.

E. Dust and other contaminants shall be completely removed from holes by blowing with compressed air in accordance with manufacturer's specified hole cleaning instructions

3.5 ANCHOR AND DOWEL INSTALLATION

A. Anchor and dowel installation shall be according to the resin manufacturer's recommendations, including filling holes with resin appropriately and installing the anchor or dowel in the hole.

B. Resin shall completely enshroud installed anchors and dowels without entrapping air in the hole and shall be finished flush with surface of concrete.

3.6 PROTECTION DURING RESIN CURE TIME

A. Protect dowels and anchors from displacement or disturbance during entire resin curing period. Consider the ambient temperature in determination of minimum cure time.

B. Minimum temperature requirements of the concrete shall be maintained for full cure time of adhesive as specified by the manufacturer.

3.7 REPLACEMENT ANCHORS AND DOWELS AT FAILED TEST LOCATIONS

A. At failed tension load test locations:
   1. Abandon anchor, cut 1 inch below concrete, and patch with mortar.
   2. Contact Engineer for direction.

3.8 DAMAGED REINFORCEMENT

A. Damage to existing reinforcement shall be considered defective work.

3.9 SURFACE REPAIRS AND FILLING OF ABANDONED HOLES

A. Clean and repair surfaces damaged by drilling or installation. Cleaning and repairing requirements shall be as directed by the Architect.

B. Abandoned holes shall be filled with patching mortar in accordance with the manufacturer's recommendations.

3.10 CORRECTION OF DEFECTIVE WORK

A. Correction of defective work shall be the responsibility of the Contractor.

B. Work not in compliance with the requirements of the Contract Documents shall be considered defective, unless otherwise directed in writing by the Owner's Representative.

C. Corrected work shall conform to the requirements of the Contract Documents.

D. The Contractor shall prepare a submittal documenting the defective work and proposed corrections and submit to the Owner's Representative for review. The submittal shall include a description of the defective work, the location of defective work, and shall be accompanied by supporting sketches, photographs, or both. Additionally, the submittal shall include similar documentation of the Contractor's proposed corrections.

E. Correction of defective work shall not commence until the Owner's Representative has reviewed and accepted the submittal.

F. Correction of defective work shall be inspected by the Owner's Testing Agency.

3.11 CLEAN-UP

A. Remove from the site all debris resulting from the work of this Section.

END OF SECTION

DocuSign Envelope ID: 330DEBD6-9A9E-4F34-BDCC-1AC1BAA701E9

SECTION 99-032530

EXPANSION ANCHORS

PART 1 - GENERAL

1.1 SECTION INCLUDES

A. Construction: Provide material, labor, equipment, services, tests and inspections necessary for the installation of post-installed expansion anchors.

1.2 RELATED INFORMATION AND REQUIREMENTS

A. Drawings and general provisions of the Contract, including general conditions and Parts 1 through 7 of the Special Provisions Sections, and all other Specification Sections apply to this Section.

1.3 REFERENCE DOCUMENTS

A. Standards: Comply with the provisions of the documents listed below and with the requirements described in this Section. Use current editions of documents unless earlier editions are specifically referenced by the governing code or are otherwise indicated.
   1. CBC – 2013 California Building Code.
   2. ACI 355.2, American Concrete Institute, “Qualification of Post-installed Mechanical Anchors in Concrete.
   3. ACI 318, American Concrete Institute, “Building Code Requirements for Structural Concrete”
   4. ASTM - American Society for Testing and Materials, designations referenced herein.
   5. Federal Specifications - United States General Services Agency Federal Specifications and Commercial Item Description reports as referenced herein.
   6. International Code Council Evaluation Services (ICC-ES) or the International Association of Plumbing and Mechanical Officials (IAPMO-UES), Evaluation Service Reports referenced herein.

1.4 SUBMITTALS

A. General: Submittals shall be sent to the Owner’s Representative, or Owner’s Testing Agency, or both, as required herein for review prior to commencing the work. Review of submittals covers the general character of the details and to verify compliance with the performance requirements. Review does not cover checking of quantities, proportions or dimensions. Such review shall not relieve the Contractor from responsibility for executing the work in accordance with the Contract Documents.

B. Manufacturer's Data: The Contractor shall submit the manufacturer’s ICC-ES or IAPMO-UES report to the Owner’s Representative for review.

1.5 TESTS AND INSPECTIONS

A. Notification:
   1. The Contractor shall notify the Owner’s Testing Agency of work to be tested and inspected. Notification shall be sufficiently in advance to allow scheduling of tests and inspections, but not less than 24 hours.
   2. The Contractor shall immediately notify the Owner’s Representative if the Owner’s Testing Agency indicates that quality assurance tests and inspection requirements have not been met.

B. Owner’s Quality Assurance Tests and Inspections:
   1. General: Quality assurance tests and inspections shall be the responsibility of the Owner. The Owner shall retain a testing agency, referred to herein as the Owner’s Testing Agency, who shall perform the required tests and inspections, prepare written summary reports of tests and inspections, and review submittals.
   2. The Owner’s Testing Agency shall provide special inspection to verify compliance with the specifications and the product’s ICC-ES or IAPMO-UES report the for following items:

DocuSign Envelope ID: 330DEBD6-9A9E-4F34-BDCC-1AC1BAA701E9

a. Drill type, diameter, bit type, and setting.
b. Hole diameter, depth, and accuracy of location.
c. Cleanliness and surface preparation of holes.
d. Expansion anchor type and size.
e. Installation of expansion anchors.
f. Torque tightening.

3. The Owner's Testing Agency shall conduct static tension load tests on installed anchors. Test 10% of each diameter of anchor, or test as scheduled on the Drawings. Tests shall be in accordance with ASTM E 488, "Standard Test Methods for Strength of Anchors in Concrete and Masonry Elements".
   a. Tests shall not begin until one full day after anchor installation.
   b. Scheduled test load shall be applied for 15 seconds during which the maximum allowable slip shall be 1/8 inch.
   c. If an anchor fails the tension load test, additional expansion anchors shall be tension load tested until 20 consecutively successful tests have been performed.
   d. Provide tension load tests for replacement expansion anchors.
   e. The Owner's Testing Agency shall develop and utilize an effective method of field marking locations and results of expansion anchor tests.
      1) Field marking for test locations shall not affect exposed concrete appearance.
      2) A detailed drawing record of test locations and results shall be acceptable.

PART 2 - PRODUCTS

2.1 MATERIALS

A. Expansion Anchors:
   1. Anchors shall be wedge-type anchors made from carbon steel or stainless steel as indicated on the drawings, and tested in accordance with AC 193 Cracked Concrete (seismic) requirements of carbon steel or stainless steel as indicated on the Drawings.
   2. Expansion anchors for use in normal weight concrete:
      a. Hilti Corporation's "Kwik Bolt TZ" (ICC-ES Report ESR-1917).
      b. Simpson Strong-Tie's "Strong-Bolt 2" (ICC-ES Report No. ESR-3037).
      c. Equivalent subject to review and approval by Engineer.
   3. Expansion anchors for use in lightweight concrete (installed directly to concrete or through bottom of light gage metal deck):
      a. Hilti Corporation's "Kwik Bolt TZ" (ICC-ES Report ESR-1917).
      b. Simpson Strong-Tie's "Strong-Bolt 2" (ICC-ES Report No. ESR-3037).
      c. Equivalent subject to review and approval by Engineer.

B. Patching Mortar: BASF's "EMACO S66 CI", Sika Corporation's "SikaRepair 223", Simpson Strong-Tie's FX 263 or equal.

PART 3 - EXECUTION

3.1 PROTECTION OF MATERIALS

A. Protect materials from damage, corrosion, and weather conditions as designated by the manufacturer, and contaminants such as grease, oil, and dirt.

3.2 LAYOUT

A. Inspect areas to be drilled to verify conditions of access, interferences, and existing materials.
   1. Verify location of reinforcement in areas to be drilled using non-destructive methods. Contractor shall use care and caution to avoid cutting or damaging reinforcement. Maintain a minimum clearance of one inch between reinforcement and anchors or dowels, unless otherwise shown on the Drawings.

3.3 TOLERANCES

A. Anchor hole locations shall conform to tolerances for the material being attached.

DocuSign Envelope ID: 330DEBD6-9A9E-4F34-BDCC-1AC1BAA701E9

3.4 DRILLING AND PREPARATION OF HOLES

A. Holes shall be drilled in concrete that has achieved the minimum specified compressive strength. Holes cannot be drilled until a minimum of seven days after concrete case been poured.

B. Holes shall be drilled using the manufacturer's recommended drill type, bit, and setting, unless otherwise noted on the drawings.

C. Hole diameter shall be as indicated by the manufacturer. Depth of hole shall be as indicated on the Drawings; however, in no case shall the embedment of expansion anchors be less than the minimum required by the manufacturer.

D. Where drilling causes the concrete to spall or crack, the holes shall be considered defective work.

E. Dust and other contaminants shall be completely removed from holes by blowing with compressed air or other effective means.

3.5 ANCHOR INSTALLATION

A. Installation of anchors in the holes shall be in accordance with manufacturer's recommendations.

B. Anchors shall be tightened to the required installation torque values as determined by the manufacturer.

3.6 REPLACEMENT ANCHORS AT FAILED TEST LOCATIONS

A. At failed tension load test locations:
   1. Remove anchor if possible without damaging concrete or abandon anchor in place.
   2. Install replacement anchors in new holes at location approved by the Engineer of Record or the Owner's Testing Agency.
   3. Existing holes not approved by the Owner's Testing Agency shall be considered defective work.
   4. Contact Engineer for anchor recommendations into existing holes if necessary.

3.7 DAMAGED REINFORCEMENT

A. Damage to existing reinforcement shall be considered defective work.

3.8 SURFACE REPAIRS AND FILLING OF ABANDONED HOLES

A. Clean and repair surfaces damaged by drilling or installation. Cleaning and repairing requirements shall be as directed by the Architect.

B. Where expansion anchors have been removed, abandoned holes shall be filled with patching mortar in accordance with the manufacturer's recommendations.

3.9 CORRECTION OF DEFECTIVE WORK

A. Correction of defective work shall be the responsibility of the Contractor.

B. Work not in compliance with the requirements of the Contract Documents shall be considered defective, unless otherwise directed in writing by the Owner's Representative.

C. Corrected work shall conform to the requirements of the Contract Documents.

D. The Contractor shall prepare a submittal documenting the defective work and proposed corrections and submit to the Owner's Representative for review. The submittal shall include a description of the defective work, the location of defective work, and shall be accompanied by supporting sketches, photographs, or both. Additionally, the submittal shall include similar documentation of the Contractor's proposed corrections.

E. Correction of defective work shall not commence until the Owner's Representative has reviewed and accepted the submittal.

F. Correction of defective work shall be inspected by the Owner's Testing Agency.

3.10 CLEAN-UP

A. Remove from the site all debris resulting from the work of this Section.

DocuSign Envelope ID: 330DEBD6-9A9E-4F34-BDCC-1AC1BAA701E9

END OF SECTION

DocuSign Envelope ID: 330DEBD6-9A9E-4F34-BDCC-1AC1BAA701E9

SECTION 99-033000

CAST-IN-PLACE CONCRETE

PART 1 - GENERAL

1.1 SECTION INCLUDES

A. Conveying and placing concrete.
B. Placement under water.
C. Consolidation.
D. Construction joints.
E. Expansion and contraction joints.
F. Curing and protection.

1.2 RELATED SECTIONS

A. Portland cement concrete specified in Section 99-030515, Portland Cement Concrete.
B. Finishing and curing of formed and unformed concrete surfaces, including repair and patching of surface defects, are specified in Section 99-033501, Concrete Finishing.

1.3 DEFINITIONS

A. The words and terms used in these Specifications conform to the definitions given in ACI 116R.

1.4 REFERENCES

A. American Concrete Institute (ACI):

1.	ACI 116R	Cement and Concrete Terminology
2.	ACI 117	Standard Specification for Tolerances for Concrete Construction and Materials
3.	ACI 301	Standard Specifications for Structural Concrete
4	ACI 302.1R	Guide for Concrete Floor and Slab Construction
5.	ACI 303.1	Standard Specification for Cast-In-Place Architectural Concrete
6.	ACI 304R	Guide for Measuring, Mixing, Transporting, and Placing Concrete
7.	ACI 304.2R	Placing Concrete by Pumping Methods
8.	ACI 305R	Hot Weather Concreting
9.	ACI 306.1	Standard Specification for Cold Weather Concreting
10.	ACI 308	Standard Practice for Curing Concrete
11.	ACI 309R	Guide for Consolidation of Concrete
12.	ACI 318	Building Code Requirements for Structural Concrete
13.	ACI 503.2	Standard Specification for Bonding Plastic Concrete to Hardened Concrete with a Multi-Component Epoxy Adhesive

B. American Society for Testing and Materials (ASTM):

1.	ASTM C31	Standard Practice of Making and Curing Concrete Test Specimens in the Field
2.	ASTM C94	Specification for Ready-Mixed Concrete
3.	ASTM C881	Specification for Epoxy-Resin-Base Bonding Systems for Concrete

C. California Department of Transportation (Caltrans), Standard Specifications (2010):

1.	Section 51	Concrete Structures

1.5 SUBMITTALS

A. General: Refer to Section GC-43, Shop Drawings, Product Data, and Samples, for submittal

DocuSign Envelope ID: 330DEBD6-9A9E-4F34-BDCC-1AC1BAA701E9

requirements and procedures.

B. Shop Drawings:
   1. Submit drawings that indicate the locations of all joints in concrete, including construction joints, expansion joints, isolation joints, and contraction joints. Coordinate with the requirements specified in Section 99-031100, Concrete Forming.
   2. Submit drawings that indicate concrete placement schedule, method, sequence, location, and boundaries. Include each type and class of concrete, and quantity in cubic yards.
   3. Submit shop drawings for permanent steel deck forms in accordance with Caltrans Standard Specifications, Section 51-1.01C(2) Permanent Steel Deck Forms.

C. Product Data: Submit manufacturer's product data for epoxy adhesive.

D. Records and Reports: Report the location in the finished work of each mix design, and the start and completion times of placement of each batch of concrete placed for each date concrete is placed.

1.6 QUALITY ASSURANCE

A. Tolerances:
   1. Concrete Tolerances: Comply with the requirements of ACI 117 as applicable. Coordinate with the requirements specified in Section 99-031100, Concrete Forming.
   2. Tolerances for Slabs and Flatwork: Comply with the requirements specified in Section 99-033501, Concrete Finishing.
   3. Tolerances for Roadway Surfaces of Structures and Approach Slabs: Comply with the requirements specified in Caltrans Standard Specifications, Section 51-1.01D(4)(b) Surface Smoothness.

B. Coefficient of Friction for Deck Surfaces and Approach Slabs: Comply with the requirements specified in Caltrans Standard Specifications, Section 51-1.01D(4)(c) Coefficient of Friction.

C. Crack Intensity for Deck Surfaces: Comply with the requirements specified in Caltrans Standard Specifications, Section 51-1.01D(4)(d) Crack Intensity.

D. Architectural Concrete: Where concrete is indicated as architectural concrete exposed to public view, such concrete shall be produced in accordance with applicable requirements of ACI 301 and ACI 303.1.

   Site Mock-Ups:
   1. Refer to Section 99-014338, Field Samples and Mockups, for mock-up requirements and procedures.
   2. Construct site mock-ups for all architectural concrete work and formed concrete that will be exposed to the public in the finished work, not less than 4 feet by 6 feet in surface area, for review and acceptance by the Engineer, before starting the placement of concrete.
   3. Approved site mock-ups shall set the standard for the various architectural concrete features, formed finishes, and colors of the concrete. Provide as many mock-ups as required to show all the different features and formed surfaces of the concrete.

E. Cold Joints: Cold joints in concrete will not be permitted unless planned and treated properly as construction joints.

F. Monitoring of Formwork: Provide monitoring of forms and embedded items to detect movement, or forms and embedded items out-of-alignment, from pressure of concrete placement.

1.7 ENVIRONMENTAL REQUIREMENTS

A. Delivering and placing of concrete in hot weather and cold weather shall conform with applicable requirements of ACI 305R and ACI 306.1 and Section 99-030515, Portland Cement Concrete.

B. Do not place concrete when the rate of evaporation of surface moisture from concrete exceeds 0.2 pounds per square foot per hour as indicated in Figure 2.1.5 of ACI 305R.

DocuSign Envelope ID: 330DEBD6-9A9E-4F34-BDCC-1AC1BAA701E9

C. Do not place concrete in, or adjacent to, any structure where piles are required until all piles in the structure have been driven or installed.

PART 2 - PRODUCTS

2.1 MATERIALS

A. Formwork: Refer to Section 99-031100, Concrete Forming, for requirements.
B. Joint Fillers and Sealers: Refer to Section 99-031500, Concrete Accessories, for requirements.
C. Portland Cement Concrete: Refer to Section 99-030515, Portland Cement Concrete, for mix designs and other requirements.
D. Concrete Curing Materials: Refer to Section 99-033501, Concrete Finishing, for requirements.
E. Epoxy Adhesive: ASTM C881, Type II for non-load-bearing concrete and Type V for load-bearing concrete, Grade and Class as determined by project conditions and requirements.
F. Permanent Steel Deck Forms: Comply with the requirements specified in Caltrans Standard Specifications, Section 51-1.03C(2)(c) Permanent Steel Deck Forms.

PART 3 - EXECUTION

3.1 EXAMINATION

A. Inspect forms, earth bearing surfaces, reinforcement, and embedded items, and obtain the Engineer's written approval before placing concrete. Complete and sign a pour card on the form supplied by the Engineer. The Engineer shall countersign the card prior to commencing the pour.

3.2 PREPARATION

A. Place concrete under the observation of the Engineer and with the Contractor’s Quality Control Representative present to document requirements and results of the placement.
B. Whenever possible, place concrete during normal working hours. When concrete- placement schedules require concrete placement at times other than normal working hours, ensure that the Engineer is notified and is present at the time of placement.
C. Do not place concrete until conditions and facilities for the storage, handling, and transportation of concrete test specimens are in compliance with the requirements of ASTM C31 and Section 99-030515, Portland Cement Concrete, and are approved by the Engineer.
D. Prior to placement of concrete, the subgrade shall be in a firm, well-drained condition, and of adequate and uniform load-bearing nature to support construction personnel, construction materials, construction equipment, and steel reinforcing mats without tracking, rutting, heaving, or settlement. All weak, soft, saturated, or otherwise unsuitable material shall be removed and replaced with structural backfill or lean concrete.
E. All structure foundations shall be inspected and approved, in writing, by a qualified, independent geotechnical engineer prior to placement of footings and base slabs, to confirm the adequacy of the supporting soil for concrete placement.
F. Earth bottoms or bearing surfaces for footings and slabs shall be dampened but not saturated or muddied just before placing concrete.

3.3 TRANSPORTING

A. Concrete shall be central-mixed concrete from a central batch plant, transported to the jobsite in a truck mixer, in accordance with the requirements specified in Section 99-030515, Portland Cement Concrete, and ASTM C94.

DocuSign Envelope ID: 330DEBD6-9A9E-4F34-BDCC-1AC1BAA701E9

B. Transport concrete to the jobsite in a manner that will assure efficient delivery of concrete to the point of placement without adversely altering specified properties with regard to water-cement ratio, slump, air entrainment, and homogeneity.

3.4 CONVEYING AND PLACING

A. Placement Standards: Conveying and placing of concrete shall conform with applicable requirements of ACI 301, ACI 302.1R, ACI 304R, and ACI 318.

B. Handling and Depositing:

1. Concrete placing equipment shall have sufficient capacity to provide a placement rate that will preclude cold joints and that shall deposit the concrete without segregation or loss of ingredients.
2. Concrete placement, once started, shall be carried on as a continuous operation until the section of approved size and shape is completed.
3. Concrete shall be handled as rapidly as practicable from the mixer to the place of final deposit by methods that prevent the separation or loss of ingredients. Concrete shall be deposited, as nearly as practicable, in its final horizontal position to avoid redistribution or flowing.
4. Concrete shall not be dropped freely where reinforcing will cause segregation, nor shall it be dropped freely more than 5 feet. Concrete shall be deposited to maintain a plastic surface approximately horizontal.
5. In placing walls, columns, or thin sections (6 inches or less in thickness) of heights greater than 10 feet, concrete placement rate, lift thickness, and time intervals between lifts shall be as indicated on approved Shop Drawings. Openings in the form, elephant trunk tremies, or other approved devices, shall be used that will permit the concrete to be placed without segregation or accumulation of hardened concrete on the forms or metal reinforcement above the level of the fresh concrete.
6. Concrete that has partially hardened shall not be deposited in the work. The discharge of concrete shall be started not later than 60 minutes after the introduction of mixing water. Placing of concrete shall be completed within 90 minutes after the first introduction of water into the mix.

C. Pumping:

1. Concrete may be placed by pumping if the maximum slump can be maintained and if accepted in writing by the Engineer for the location proposed.
2. Placing concrete by pumping methods shall conform with applicable requirements of ACI 304R and ACI 304.2R.
3. Equipment for pumping shall be of such size and design as to ensure a continuous flow of concrete at the delivery end without separation of materials. Concrete from end of hose shall have a free fall of less than 5 feet. Pump hoses shall be supported on horses or similar devices so that reinforcement or post-tensioning ducts or tendons are not moved from their original position.
4. The concrete mix shall be designed to the same requirements as specified in Section 99-030515, Portland Cement Concrete, and may be altered for placement purposes with the prior approval of the Engineer.

3.5 PLACEMENT UNDER WATER

A. Placement Standards: Placing of concrete in or under water shall conform with requirements of ACI 304R. All concrete to be placed under water shall be placed by the tremie method or by direct pumping.

DocuSign Envelope ID: 330DEBD6-9A9E-4F34-BDCC-1AC1BAA701E9

B. Placement Requirements: Deposit concrete in water only when indicated or approved in writing by the Engineer, and only under the observation of the Engineer. Use only tremie method and direct pumping with equipment that has been accepted by the Engineer.

3.6 CONSOLIDATION

A. Concrete shall be thoroughly consolidated and compacted by mechanical vibration during placement in accordance with the requirements of ACI 309R.

B. The Engineer will inspect concrete placement to confirm that proper placing methods are being employed, and that special techniques are being used in congested areas and around obstructions such as pipes and other embedded items. Check installation of embedded items for correct location and orientation during concrete placement.

C. Conduct vibration in a systematic manner by competent, skilled, and experienced workers, with regularly maintained vibrators, and with sufficient back-up units at the jobsite. Use the largest and most powerful vibrator that can be effectively operated in the given work, with a minimum frequency of 8,000 vibrations or impulses per minute, and of sufficient amplitude to effectively consolidate the concrete.

D. Insert and withdraw the vibrator vertically at uniform spacing over the entire area of the placement. Space the distance between insertions such that "spheres of influence" of each insertion overlap.

E. Conduct vibration so as to produce concrete that is of uniform texture and appearance, free of honeycombing, air and rock pockets, streaking, cold joints, and visible lift lines.

F. On vertical surfaces and on all architectural concrete where an as-cast finish is required, use additional vibration and spading as required to bring a full surface of mortar against the forms, so as to eliminate objectionable air voids, bug holes, and other surface defects. Additional procedures for vibrating concrete shall consist of the following:

1. Reduce the distance between internal vibration insertions and increase the time for each insertion.
2. Insert the vibrator as close to the face of the form as possible, without contacting the form.
3. Use spading as a supplement to vibration at forms to provide fully filled out form surfaces without air holes and rock pockets.
4. Provide vibration of forms only if approved by the Engineer for the location.

3.7 CONSTRUCTION JOINTS

A. Construction joints will be permitted only where indicated or approved by the Engineer.

B. Provide and prepare construction joints and install waterstops in accordance with the applicable requirements of ACI 301 and ACI 304R, and as specified in Section 99-031100, Concrete Forming.

C. Make construction joints straight and as inconspicuous as possible, and in exact vertical and horizontal alignment with the structure, as the case may be.

D. Use approved key, at least 1-1/2 inches in depth, at joints unless otherwise indicated or approved by the Engineer.

E. Thoroughly clean the surface of the concrete at construction joints and remove laitance, loose or defective concrete, coatings, sand, sealing compound and other foreign material. Prepare surfaces of joints by sandblasting or other approved methods to remove laitance and expose aggregate uniformly.

F. Immediately before new concrete is placed, wet the joint surfaces and remove standing water. To allow for shrinkage, do not place new concrete against the hardened concrete side of a construction joint for a minimum of 72 hours.

DocuSign Envelope ID: 330DEBD6-9A9E-4F34-BDCC-1AC1BAA701E9

G. Locate joints that are not indicated so that the strength of the structure is not impaired. Joint types and their locations are subject to prior approval of the Engineer.
H. Ensure that reinforcement is continuous across construction joints.
I. Place waterstops in construction joints where indicated.
J. Where bonding of the joint is required, provide epoxy adhesive hereinbefore specified and apply in accordance with ACI 503.2.
K. Retighten forms and dampen concrete surfaces before concrete placing is continued.
L. Allow at least 72 hours to elapse before continuing concrete placement at a construction joint. Approval for accelerating the minimum time elapsing between adjacent placements will be based on tests and methods that confirm that a minimum moisture loss at a relatively constant temperature will be maintained for the period as necessary to control the heat of hydration and hardening of concrete, and to prevent shrinkage and thermal cracking.

3.8 EXPANSION AND CONTRACTION JOINTS

A. Refer to Section 99-031100, Concrete Forming, for slab screeds and for formwork where expansion and contraction joints are indicated as architectural features, such as reveals or rustications.
B. Refer to Section 99-031500, Concrete Accessories, for expansion joint filler material and joint sealing compound.
C. Refer to Section 99-033501, Concrete Finishing, for finishing of edges of expansion joints in slabs with curved edging tool.

3.9 CURING AND PROTECTION

A. Curing of concrete shall conform with applicable requirements of ACI 301 and ACI 308, except that the curing duration shall be a minimum period of ten days. Curing with earth, sand, sawdust, straw, and hay will not be permitted.
B. Keep concrete in a moist condition from the time it is placed until it has cured for at least ten days. Keep forms damp and cool until removal of forms.
C. Immediately upon removal of forms, exposed concrete surfaces shall be kept moist by applying an approved curing compound or by covering with damp curing materials as specified in Section 99-033501, Concrete Finishing.
D. Concrete shall not be permitted to dry during the curing period because of finishing operations.
E. Protect fresh concrete from hot sun, drying winds, rain, damage, or soiling. Fog spray freshly placed slabs after bleed water dissipates and after finishing operations commence. Allow no slabs to become dry at any time until finishing operations are complete.
F. Finishing and curing of slabs are specified in Section 99-033501, Concrete Finishing.
G. Protect concrete from injurious action of the elements and defacement of any kind. Protect exposed concrete corners from traffic or use that will damage them in any way.
H. Protect concrete during the curing period from mechanical and physical stresses that may be caused by heavy equipment movement, subjecting the concrete to load stress, load shock, or excessive vibration.

3.10 REPAIR OF SURFACE DEFECTS

A. Refer to Section 99-033501, Concrete Finishing, for requirements.

END OF SECTION

DocuSign Envelope ID: 330DEBD6-9A9E-4F34-BDCC-1AC1BAA701E9

SECTION 99-033001

CAST IN PLACE CONCRETE

PART 1 - GENERAL

1.1 SUMMARY

A. Scope: This work consists of constructing cast-in-place concrete facilities.

B. Concrete:
   1. Except for concrete used for minor work, concrete must comply with section 90 of the Standard Specifications. The minimum required compressive strength must be as described or 3,600 psi at 28 days, whichever is greater.
   2. Concrete for minor work must comply with section 90-2 of the Standard Specifications.

C. Reinforcement: Reinforcement must comply with section 52 of the Standard Specifications, except you may use deformed bars complying with ASTM A 615/A 615M, Grade 60.

1.2 SUBMITTALS

A. Product Data:
   1. Manufacturer's descriptive data, installation and use instructions for admixtures, expansion joint material, vapor barrier, curing compound, and hardener must be submitted.
   2. Descriptive data must be delivered to the Engineer at the job site

B. Concrete Mix Designs: Submit copies of concrete mix designs.

C. Certificates of Compliance: Submit a certificate of compliance when required.

1.3 QUALITY CONTROL AND ASSURANCE

PART 2 MATERIALS

2.1 CONCRETE MIXES

A. The amount of cementitious material used per cubic yard of concrete for each building element must comply with the following:

Type	Cementitious Material Content (Pounds/CY)
Concrete (Structural Work): Footings, foundation walls, floor slabs, building frame members, building walls	590 min.[a]
Concrete (Sewer Structures): For sewer structures, vehicle washracks and mudrinse slabs	658 min.[b]
Concrete (Minor Work): For concrete curbs, sidewalks, driveways, gutter depressions, new door openings,	505 min.

Notes:

[a]For concrete designated by compressive strength, the maximum amount of cementitious material must be 800 pounds per cubic yard.

[b]Concrete must be air entrained under section 90-1.02E of the Standard Specifications. The air content at time of mixing and prior to placing must be 6 ± 1½ percent.

B. In addition to the above requirements, concrete must comply with section 90-1.02H of the Standard Specifications.

2.2 FORM MATERIALS

DocuSign Envelope ID: 330DEBD6-9A9E-4F34-BDCC-1AC1BAA701E9

A. Forms for Exposed Finish Concrete:
   1. Forms for exposed surfaces must be plywood, metal or other panel type materials. Plywood must be not less than 5/8 inch thick and without scars, dents, and delaminations. Forms must be furnished in largest practical pieces to minimize number of joints.
   2. Plywood must comply with the requirements of U. S. Product Standard PS-1 for Exterior B-B (Concrete Form) Class I.
   3. Forms for edges of slabs must be nominal 2-inch solid stock lumber, plywood, or metal forms.

B. Forms for Unexposed Finish Concrete: Forms for unexposed finish concrete surfaces must be plywood, lumber, metal, or other acceptable material.

C. Forms for Cylindrical Columns or Supports: Forms for cylindrical columns must be metal, fiberglass reinforced plastic, paper, or fiber tubes. Paper or fiber tubes must be constructed of laminated plies using water-resistant adhesive with wax-impregnated exterior for protection against weather or moisture.

D. Form Ties: Form ties must be factory fabricated, removable or snapoff metal ties for use as necessary to prevent spreading of forms during concrete placement.

E. Form Oil: Form oil must be commercial quality form oil which will permit the ready release of the forms and will not discolor the concrete.

2.3 EPOXY

A. Epoxy must comply with section 99-032520 Anchors and Dowels in Resin.

2.4 RELATED MATERIALS

A. Expansion Joint Material: Expansion joint material must be commercial quality asphalt impregnated pressed fiber sheets, ½-inch minimum thickness.

B. Type A Control Joints: Type A control joints must be commercial quality, preformed, T-shaped plastic strips with detachable top flange.

C. Keyed Construction Joint Forms: Keyed construction joint forms must be commercial quality, galvanized metal or plastic, factory fabricated construction joint forms. Forms must produce a rabbeted key type joint.

D. Divider and Edger Strips: Divider and edger strips must be foundation grade redwood.

E. Mortar: Mortar must consist of one part cement to 2 parts clean sand and only enough water to permit placing and packing.

F. Curing Compound: Curing compound must be curing compound no. 6.

G. Concrete Hardener: Concrete hardener must be commercial quality water borne penetrating type magnesium fluosilicate, zinc fluosilicate or combination thereof.

H. Nonshrink Grout:
   1. Nonshrink grout must be metallic for concealed areas, nonmetallic for exposed areas.
   2. Grout must be factory packaged, nonstaining, noncorrosive, nongaseous grout complying with ASTM C 1107; free of oxidizing catalysts and inorganic accelerators, used as dry or damp pack, or mixed to a 20-second flow (CRD C621), without segregation or bleeding at any temperature between 45 deg F and 90 deg F.
   3. Working time of grout must be 30 minutes or more.

PART 3 CONSTRUCTION

3.1 PREPARATION

A. Existing Concrete Construction:

DocuSign Envelope ID: 330DEBD6-9A9E-4F34-BDCC-1AC1BAA701E9

1. Where fresh concrete joins existing or previously placed concrete or masonry, the contact surfaces of the existing or previously placed material must be roughened, cleaned, flushed with water and allowed to dry to a surface dry condition immediately prior to placing the fresh concrete. The roughened surface must be no smoother than a wood trowelled surface. Cleaning of the contact surfaces must remove laitance, curing compounds, debris, dirt and such other substances or materials which would prevent bonding of the fresh concrete.
2. Abrasive blast methods must be used to clean horizontal construction joints to the extent that clean aggregate is exposed.
3. Exposed reinforcing steel located at the contact surfaces which is to be encased in the fresh concrete must be cleaned to remove any substance or material that would prevent bonding of the fresh concrete.

B. Forms:
1. Forms must be mortar tight, true to the dimensions, lines, and grades shown, securely fastened and supported, and of adequate rigidity to prevent distortion during placing of concrete.
2. Forms for exposed surfaces must be constructed with triangular fillets not less than 3/4" x 3/4" attached so as to prevent mortar runs and to produce smooth straight chamfers at all sharp edges of the concrete.
3. Form fasteners must be removable without chipping, spalling, heating or otherwise damaging the concrete surface. Form ties must be removed to a depth of at least one inch below the surface of the concrete.
4. The inside surfaces of forms must be cleaned of all dirt, mortar and foreign material. Forms must be thoroughly coated with form oil prior to use.
5. Forms must not be stripped until at least 40 hours after placing concrete, except soffit forms and supports must not be released or removed until at least 10 days after placing concrete.
6. Anchorages and embedded items must be placed and rigidly secured at their planned locations prior to placing concrete.
7. Reglets or embedded flashing must be installed on concrete forms before the concrete is placed.

C. Placing Reinforcement:
1. If authorized, you may use plastic supports to hold reinforcement in position.
2. Set wire ties with ends directed into concrete, away from exposed concrete surfaces.
3. Install welded wire reinforcement in longest practicable lengths on bar supports spaced to minimize sagging. Lap edges and ends of adjoining sheets at least one mesh spacing. Offset laps of adjoining sheet widths to prevent continuous laps in either direction. Lace overlaps with wire.

3.2 PLACING CONCRETE

A. Concrete must be placed under section 51-1.03D of the Standard Specifications.

B. Concrete must be deposited and consolidated in a continuous operation within limits of construction joints, until the placing of the panel or section is completed.

C. When concrete is to be placed in large areas requiring more than two pours, concrete must be placed in alternate long strips between construction joints and the final slab infilled

3.3 FINISHING CONCRETE SURFACES

A. Finishing Unformed Surfaces:
1. Slabs must be placed full thickness to finish elevation and leveled to screeds by use of long straightedges. The screeds must be set to grade at approximately 6-foot centers. After leveling, screeds must be removed and the surface must be floated with wooden floats.

DocuSign Envelope ID: 330DEBD6-9A9E-4F34-BDCC-1AC1BAA701E9

2. Type A control joint strips must be inserted into the floated concrete so that the bottom of the top flange is flush with the finish elevation. Strips must be standard manufactured lengths and must be placed on an approximate straight line. The top flange of the strips must be removed after the concrete has set and cured.
3. The floated surface must be trowelled with steel trowels. Troweling must form a dense, smooth and true finish. Walkways, pedestrian ramps, stairs and outdoor slabs for pedestrian traffic must be given a non-slip broom finish unless a different finish is described.
4. The application of cement dust coat will not be permitted.
5. Steel trowel finish and broom finish will not be required for slabs to receive exposed aggregate finish nor for slabs to be covered with ceramic tile.
6. Concrete floor surfaces to receive ceramic tile must be floated to grade and then, before final set of the concrete, the floated surfaces must be roughened with stiff bristled brushes or rakes.
7. Finished surfaces of floor slabs must not deviate more than 1/8 inch from the lower edge of a 10-foot long straight edge.

B. Finishing Formed Surfaces:
1. Formed concrete surfaces must be finished by filling holes or depressions in the surface, repairing all rock pockets, and removing fins. All surfaces of formed concrete exposed to view must have stains and discolorations removed, unsightly bulges removed, and all areas which do not exhibit the required smooth, even surface of uniform texture and appearance must be sanded with power sanders or other authorized abrasive means until smooth, even surfaces of uniform texture and appearance are obtained.
2. Cement mortar, patching and finishing materials used to finish exposed surfaces of concrete must closely match the color of surrounding surfaces.
3. Nonskid Abrasive Aggregate Finish: Where shown, walkways must receive a nonskid abrasive aggregate (grit) finish. The grit must be applied uniformly at the rate of not less than 0.3 pound per square foot and tamped into the floated concrete surface while the concrete is plastic. The grit must be buried about 0.7 diameter of each particle into the concrete.

3.4 CURING CONCRETE

A. Freshly placed concrete must be protected from premature drying and excessive cold or hot temperatures.

B. Floor slabs must be cured by the water method as specified for structures. Initial curing of floor slabs must start as soon as free water has disappeared from the concrete surface.

C. Concrete surfaces, other than floor slabs, must be cured by the forms-in-place method or the water method as specified for structures.

3.5 PROTECTING CONCRETE

A. Vehicles, equipment, or concentrated loads weighing more than 300 pounds individually and material stockpiles weighing more than 50 pounds per square foot will not be permitted on the concrete within 10 calendar days after placing.

3.6 SPECIAL TREATMENTS

A. Concrete Hardener:
1. Surfaces must be clean and dry before the application of hardener.
2. The solution must be applied under the manufacturer's instructions.
3. After the hardener has dried, the surface must be mopped with water to remove encrusted salts.

B. Epoxy Resin Adhesive: Epoxy resin adhesive must be applied to concrete surfaces shown. Epoxy resin adhesive must be mixed and applied under the manufacturer's instructions.

C. Epoxy Mortars:

DocuSign Envelope ID: 330DEBD6-9A9E-4F34-BDCC-1AC1BAA701E9

1. Epoxy for use as a binder in epoxy mortars must be thoroughly mixed together before the aggregate is added, and unless otherwise specified, the mix proportions must consist of one part binder to approximately 4 parts of aggregate, by volume.
2. All surfaces against which epoxy mortars are to be applied must be free of rust, paint, grease, asphalt, and loose or deleterious material.

END OF SECTION

DocuSign Envelope ID: 330DEBD6-9A9E-4F34-BDCC-1AC1BAA701E9

SECTION 99-033500

CONCRETE SEALERS

PART 1 - GENERAL

1.1 SUMMARY

A. Section Includes: Concrete sealers for existing exposed concrete in electrical closets and similar spaces.

1.2 SUBMITTALS

A. Product Data: Submit product data, including chemical properties and percentage of solids, for each product.

1.3 QUALITY ASSURANCE

A. Applicator's Qualifications: Company specializing in performing work of this Section with 3 years minimum experience.

1.4 DELIVERY, STORAGE, AND HANDLING

A. Deliver, store, and handle products in accordance manufacturer’s instructions.

B. Store products above 50 degrees F, but no greater than 85 degrees F, unless otherwise recommended by manufacturer.

1.5 ENVIRONMENTAL REQUIREMENTS

A. Do not apply materials when ambient or substrate surface temperatures are below 40 degrees F or higher than 100 degrees F.

1.6 SCHEDULING

A. Schedule application of products at proper time intervals after concrete finishing and curing operations.

B. Maintain proper moisture content of concrete before, during, and after application of specified products.

1.7 WARRANTY

A. Warrant applied sealer system to be free of defects related to material deficiency and workmanship for 5 years.

B. Warranty period begins at date of Substantial Completion.

PART 2 - PRODUCTS

2.1 MATERIALS

A. Provide materials, equipment, and personnel required to achieve specified finish.

B. Water Based Acrylic Sealing Compounds:
   1. ASTM C1315, Type I, Class A, VOC compliant, free of natural or petroleum waxes. Dries clear with satin sheen.
   2. Compatible with subsequent coatings and toppings.
   3. VOC Requirement: Less than 100 g/L
   4. Acceptable Products:
      a. Lumiseal WB Plus, L&M Construction Chemicals, Inc.
      b. VOCOMP-30, W. R. Meadows.
      c. MonoChem AquaSeal W20, Monopole.
      d. MonoChem PermaSeal, Monopole.
   5. Sealers: Only use sealers in the building that meet or do not exceed the VOC limits of Cal-GREEN Table 5.504.4.3 for VOC Content Limits for Architectural Coatings.

DocuSign Envelope ID: 330DEBD6-9A9E-4F34-BDCC-1AC1BAA701E9

PART 3 - EXECUTION

3.1 EXAMINATION

A. Examine conditions and proceed with work when substrates are ready.

B. Verify that damage and defects in concrete surface have been repaired.

C. Verify that surfaces are clean, dry, dust free, and free of efflorescence, oil or other matter detrimental to sealer application.

3.2 PREPARATION

A. Provide protection as necessary to protect adjacent materials and surfaces from dirt, dust, and other surface or physical damage.

B. Remove loose particles, existing sealers, existing adhesives, foreign matter, and oil by method which will not affect sealer application.

C. Prepare surfaces in accordance with manufacturer's directions.

3.3 APPLICATION

A. General:
   1. Provide finishes to match approved samples at locations indicated.
   2. Apply materials in accordance with manufacturer's printed instructions.

B. Liquid Membrane-Forming Sealer:
   1. Apply sealer using low pressure airless sprayer in single coat at 400 to 600 ft/gal coverage unless greater amount is recommended by manufacturer to obtain penetration and full coverage.
   2. Do not allow flooding or puddling of material on surface.
   3. Do not dilute or alter material as packaged.
   4. Sealer Locations: Exposed concrete of janitor’s closets, electrical and telephone rooms, storage rooms, service elevator lobbies, and other scheduled areas.

3.4 ADJUSTING

A. Repair or replace adjacent Work which has been damaged by finishing operations.

3.5 CLEANING

A. Clean-up and remove debris daily.

B. Clean spillage, overspray, or drift from adjacent surfaces; remove immediately in accordance with manufacturer's instructions.

3.6 PROTECTION

A. Protect finished work.

B. Protect finished concrete surfaces from damage by construction equipment, operations and from adverse weather conditions.

END OF SECTION

DocuSign Envelope ID: 330DEBD6-9A9E-4F34-BDCC-1AC1BAA701E9

SECTION 99-033501
CONCRETE FINISHING

PART 1 – GENERAL

1.1 DESCRIPTION

A. This Section includes specifications for the finishing and curing of exposed and unexposed, formed and unformed concrete surfaces, including the repair of surface defects.

1.2 REFERENCE STANDARDS

A American Association of State Highway and Transportation Officials (AASHTO):
   1. M182 Burlap Cloth Made from Jute or Kenaf

B. American Concrete Institute (ACI):
   1. 117 Specification for Tolerances for Concrete Construction and Materials
   2. 301 Specifications for Structural Concrete
   3. 308 Standard Practice for Curing Concrete
   4. 503.4 Specification for Repairing Concrete with Epoxy Mortars

C. ASTM International (ASTM):
   1. C33 Specification for Concrete Aggregates
   2. C150 Specification for Portland Cement
   3. C171 Specifications for Sheet Materials for Curing Concrete
   4. C309 Specification for Liquid Membrane-Forming Compounds for Curing Concrete
   5. C881 Specification for Epoxy-Resin-Base Bonding Systems for Concrete

D. California Department of Transportation (Caltrans), Standard Specifications (2010):
   1. Section 15-5.05 Bridge Deck Methacrylate Resin Treatment
   2. Section 51 Concrete Structures

1.3 SYSTEM DESCRIPTION

A. Finishing of formed concrete surfaces shall conform to applicable requirements of ACI 301.

B. Finishes for slabs and flatwork shall conform to applicable requirements of ACI 301.

C. Special architectural finishes for formed concrete surfaces shall conform to applicable requirements of ACI 301.

1.4 SUBMITTALS

A. Product Data: Submit manufacturers' product data for manufactured products.

B. Samples: Review by the Engineer will be for color and texture only. Approved samples will become the Engineers control samples.
   1. Submit samples of not less than 12 inches by 12 inches in size of each type of architectural finish and color as described in the finish and color schedule in the Contract Drawings, indicating materials and methods used to produce the finishes.

1.5 QUALITY ASSURANCE

A. Requirements of Regulatory Agencies: Comply with air pollution regulations of governing authorities for sandblasting activities and operations.

B. Site Mock-Ups:

DocuSign Envelope ID: 330DEBD6-9A9E-4F34-BDCC-1AC1BAA701E9

1. Exposed Finishes: Construct site mock-ups for all exposed finishes including all architectural concrete work and all other formed concrete that will be exposed to the public in the finished work, of not less than 4 feet by 6 feet in surface area, for review and acceptance by the Engineer, before starting the placement of concrete.
2. Approved site mock-ups shall set the standard for the various colors and finishes of all architectural concrete features and formed concrete work.
3. Provide as many mock-ups as required to show all the different combinations of colors and finishes that are specified to obtain the Engineer s approval.
4. Maintain approved mock-ups and use as the standard for the aesthetic quality of the surface finish for work represented by mock-ups. Remove mock-ups when permitted by the Engineer.

PART 2 - PRODUCTS

2.1 REPAIR AND FINISHING MATERIALS

A. Portland Cement: ASTM C150, Type I or II, of same brand as used in the work. Furnish white Portland cement where required to produce color matching color of surrounding concrete.

B. Aggregate:
   1. For Bonding Grout: ASTM C33, washed clean sand passing a No. 30 sieve.
   2. For Patching Mortar: ASTM C33 washed clean, graded fine aggregate of suitable size for areas to be repaired. Clean coarse aggregate up to Size No. 8 may be added for repair of larger pockets and voids.
   3. For Washed Aggregate Finish: Washed clean, match approved sample.

C. Commercial Patching Mortar: A structural repair mortar may be furnished if appropriate for the use and approved by the Engineer.

D. Epoxy Patching Mortar: As specified in ACI 503.4 for Epoxy Mortar.

E. Epoxy Adhesive: ASTM C881, Type II or Type V, epoxy-based bonding agent.

F. Color Hardener: As specified in the Contract Documents.

2.2 REPAIR MIXES

A. Bonding Grout: 1 part Portland cement to 1 part No. 30 mesh sand, mixed to the consistency of a thick cream,

B. Patching Mortar: Make the patching mortar of the same materials and of approximately the same proportions as used for the concrete, except omit the coarse aggregate. Use not more than 1 part Portland cement to 2-1/2 parts sand by damp loose volume, and substitute white Portland cement for a portion of the regular gray Portland cement to produce patching mix matching the surrounding concrete in color when dry. Determine the proportion of white Portland cement by trial mixes and test areas, prior to repair of actual defective areas.

2.3 CONCRETE COLOR

A. Integral Color Concrete Pigment
   1. For concrete that includes integral color, provide ready-to-use, integral color material. Colors shall be as indicated on the Color and Finish Schedule in the Contract Drawings.

2.4 CURING MATERIALS

A. Damp Curing Materials: Non-staining.

DocuSign Envelope ID: 330DEBD6-9A9E-4F34-BDCC-1AC1BAA701E9

1. Waterproof Sheet Materials: ASTM C171, waterproof paper with white paper face, polyethylene film pigmented white or white burlap- polyethylene sheeting.
2. Burlap: AASHTO M182, of class or weight suitable for the use and location. Do not use burlap where concrete is exposed to direct sunlight.

B. Curing Compound: ASTM C309, liquid membrane-forming curing compound, Type I, Class A or B, as appropriate for the use or location.
1. Where concrete surfaces will receive architectural finishes, such as resilient floor coverings, paint, or membrane waterproofing, membrane- forming curing compound shall not leave a coating or residue which will impair bond of adhesives, paints, and coatings with concrete.

C. Curing Compound for Colored Concrete: Curing compound shall be approved by the color additive manufacturer for use with colored concrete. Provide W-1000 Clear Cure & Seal, manufactured by Davis Colors, or approved equal.

3.1 FINISH OF FORMED SURFACES

A. Unexposed Surfaces:
1. Concrete which will not be exposed shall be exposed in the completed structure shall be any form finish as specified in Section 99-031100, Concrete Forming, and ACI 301 for rough form finish.
2. Concrete to receive membrane waterproofing shall receive a “smooth form finish” in accordance with ACI 301.

B. Exposed Surfaces: Concrete which will be exposed shall receive the finishes and colors as described in the Contract Drawings. 1. Construction Joints: Use technique acceptable to the Engineer to achieve uniform treatment of construction joints.
2. Protection and Repair: a. Protect adjacent materials and finishes from dust, dirt, and other surface or physical damage during abrasive blast finishing operations. Provide protection as required and remove from site at completion of the work.
   b. Repair or replace other work damaged by finishing operations.
3. Clean-up: Maintain control of concrete chips, dust, and debris in each area of the work. Clean up and remove such material at the completion of each day of operation. Prevent migration of airborne materials by the use of tarpaulins, wind breaks, and similar containing devices.

3.2 REPAIR OF SURFACE DEFECTS

A. Repair Standards: Repair of surface defects shall conform to applicable requirements of ACI 301. When using epoxy mortar, conform to applicable requirements of ACI 503.4.

B. Surface Defects:
1. Begin repair of surface defects immediately after form removal. For repair with epoxy mortar, concrete shall be dry.
2. Surface defects are defined to include: form-tie holes, air voids and pockets, bug holes with a nominal diameter or depth greater than 1/4- inch, honeycombed areas, rock pockets, visible construction joints, fins and burrs.
3. Repair of surface defects shall be tightly bonded and shall result in concrete surfaces of uniform color and texture, matching adjacent surfaces, and free of shrinkage cracks.

C. Repair Work:
1. Remove honeycombed and other defective concrete down to sound concrete. Saw-cut the edges perpendicular to the surface or slightly undercut. Feather-edges will not be

DocuSign Envelope ID: 330DEBD6-9A9E-4F34-BDCC-1AC1BAA701E9

permitted. Dampen the area to be patched and an area at least 6 inches wide surrounding it to prevent absorption of water from the patching mortar.

2. Where rock pockets or similar defects or voids expose steel reinforcement, cutout to solid surface behind the reinforcing steel to provide suitable key-lock for patching mortar. Envelop exposed reinforcing bar with patching mortar.
3. Bond patching mortar to concrete with bonding grout or epoxy adhesive. Brush bonding grout well onto the concrete. Bond commercial patching mortar to concrete in accordance with the manufacturer s instructions.
4. After surface water has evaporated from the area to be patched, brush the bond coat well into the surface. When the bond coat begins to lose the water sheen, apply the patching mortar. Compact the mortar into place and strike off so as to leave the patch slightly higher than the surrounding surface. To permit initial shrinkage, leave the patch undisturbed for at least 1 hour before being finally finished. Keep the patched area damp for 7 days.
5. Neatly finish patched surfaces to match adjacent surrounding surface texture of concrete. Grind or fill surfaces to produce level and plumb, true planes.
6. For walls exposed in the finish work, form tie holes shall be patched and finished flush with adjacent surface. For holes passing entirely through walls, use a plunger type injection gun or other suitable device to completely fill the holes.
7. In order to patch honeycombed areas or rock pockets which are too large and unsatisfactory for mortar patching, cut out to solid surface, key, and pack sold with matching concrete to produce firm bond and flush surface. Patching shall match texture of adjacent surfaces where exposed in the finished work.
8. Remove repair work in exposed locations which does not match the texture and color of surrounding adjacent surfaces or which was not well performed and perform again until the repair work conforms to specified requirements.
9. Remove fines and loose materials from surfaces to receive membrane waterproofing, and patch voids and cracks flush with adjacent surfaces.
10. Cure completed repairs as specified in Article 3.05, Curing, herein.

3.3 SLABS AND FLATWORK

A. Placement and Finishing Standards: Place, consolidate, and finish slabs and flatwork in accordance with applicable requirements of ACI 301. Coordinate with Section 99-033000, Cast-In-Place Concrete, as applicable.

B. Placement:

1. Place slabs and flatwork and finish monolithically. Strike off and screed slabs to true, plane surfaces at required elevations, and thoroughly compact concrete with vibrators, floats, and tampers to force coarse aggregate below the surface. Finish slab within four hours of concrete placement.
2. Whether indicated or not, in areas where drains occur, slope finished slab to drains. Slope shall be a minimum of 1/8-inch per foot unless otherwise indicated.

C. Slab finishes: Unless indicated otherwise, slabs and flatwork shall receive the following finishes as indicated:

1. Scratched finish: Conform to ACI 301. Provide “scratched finish” for slab substrates to receive cementitious toppings or finishes, such as terrazzo or mortar setting bed for ceramic tile.

DocuSign Envelope ID: 330DEBD6-9A9E-4F34-BDCC-1AC1BAA701E9

2. Floated finish: Conform to ACI 301. Provide “floated finish” for track slabs and mud slabs and for slabs and flatwork to receive roofing and membrane waterproofing.
3. Troweled finish: Conform to ACI 301. Provide “troweled finish” for interior slabs and flatwork to be exposed in the completed structure, and for slabs to receive resilient floor coverings.
4. Broom finish: Conform to ACI 301. Exact texture and coarseness of the broom finish shall match the approved site mock-up. Provide fine or medium-coarse “broom finish” as indicated for exterior sidewalks and paving, garage floors (other than parking garages), exterior ramps and equipment and transformer pads.
5. Unspecified finish: When finish is not indicated or specified, provide finishes as specified in ACI 301.
6. Washed aggregate finish: Evenly distribute seeded aggregate over a floated finish. Tamp surface to bring fines to surface completely covering seeded aggregate. Apply troweled finish. Apply surface retarder according to manufacturer’s instructions and recommendations. Wash surfaces with water and finish with stiff bristle brush until seeded aggregate is uniformly exposed.
7. Swirl Pattern Finish: After basic floating operations have been completed, hand float slabs using wood float to produce a continuous swirl patterned surface, free from porous spots, irregularities, depressions, and small pockets or rough spots such as may be caused by accidentally disturbing particles of coarse aggregate embedded near the surface. Use natural arm circular motion to produce rows of approximately 1-foot radius swirl pattern covering approximately half of the preceding row with each successive row. Provide swirl pattern finish for parking garage floors.

D. Surface Tolerances and Finishes: Refer to Article 3.04, Tolerances, herein.
1. Flat Tolerance: Slabs and flatwork with “troweled finish” and with “nonslip finish.”
2. Straightedge Tolerance: Slabs and flatwork with fine “broom finish” or medium-coarse “broom finish.”
3. Bullfloated Tolerance: Slabs and flatwork with “scratched finish,” with “floated finish,” and with coarse “broom finish.”

E. Joints:
1. Construction, expansion, isolation, and contraction joints shall be located as indicated. Construction joints shall act as contraction joints. Where additional contraction joints are required to prevent shrinkage cracks, saw-cut such joints. All joints shall be straight and true to line.
2. Mark-off lines or edges at formed construction and expansion joints shall be finished with 1/4-inch radius curved edging tool, neat and true to line, uniform throughout.

3.4 TOLERANCES

A. Formed Surfaces: Conform with applicable requirements of ACI 117.
1. The finished plane shall not vary more than 1/8-inch from the elevation indicated.

B. Slabs and Flatwork: Conform to applicable classification requirements of ACI 117, as follows:
1. Very Flat Tolerance: True plane with maximum variation of 1/8-inch in 10 feet when measured with a 10-foot straightedge placed anywhere on the slab in any direction.
2. Flat Tolerance: True plane with maximum variation of 3/16-inch in 10 feet when measured with a 10-foot straightedge placed anywhere on the slab in any direction.
3. Straightedge Tolerance: True plane with maximum variation of 5/16-inch in 10 feet when measured with a 10-foot straightedge placed anywhere on the slab in any direction.

DocuSign Envelope ID: 330DEBD6-9A9E-4F34-BDCC-1AC1BAA701E9

4. Bullfloated Tolerance: True plane with maximum variation of 1/2-inch in 10 feet when measured with a 10-foot straightedge placed anywhere on the slab in any direction.

3.5 Curing

A. Curing Standards: Cure concrete in accordance with applicable requirements of ACI 301 and ACI 308, except that the duration of the curing period shall be ten days. Curing of concrete shall also conform to Section 99-033000, Cast-In-Place Concrete.

B. Curing Requirements:
1. Cure concrete with waterproof sheet materials, damp burlap, or curing compounds.
2. Do not use curing compounds on surfaces when their use may be detrimental to bonding of concrete, mortar, membrane waterproofing, calking and sealants, adhesives, plaster, paint, or the specified surface finish or coating.
3. Cure color-hardener finished slabs and flatwork as recommended by the color-hardener material manufacturer.
4. Cure integrally colored concrete as specified herein.
5. At the expiration of the curing period, clean concrete surfaces of all curing media.

C. Damp Curing:
1. Vertical surfaces shall be cured by keeping the forms wet at all times and by leaving the forms in place as long as possible as specified in Section 99-031100, Concrete Forming. After removal of forms, concrete shall be kept continuously damp by fog spraying or otherwise washing down the concrete in an accepted manner until ten days after placing. Protect exposed surfaces by covering with sheet materials or burlap kept continuously moist.
2. Horizontal surfaces shall be cured and protected by covering the finished surfaces with waterproof sheet materials or damp burlap, left in place for a minimum of ten days and kept continuously moist.
3. Fog spray freshly placed slabs until finishing operations commence. Allow no slabs to become dry until finishing operations are complete.

D. Curing Compound: Non-structural concrete, such as slabs-on-grade, may be cured by membrane curing compound in lieu of wet curing specified above. Apply curing compound in accordance with applicable requirements of ACI 308 and manufacturer's instructions. Apply without delay on newly finished surface. Protect integrity of membrane and touch up damaged spots immediately.

3.6 Protection

A. Protect exposed concrete surfaces, including flatwork, as required to prevent damage from impact or strains.

B. Protect fresh concrete from drying winds, rain, damage, or soiling.

C. Refer to Section 99-033000, Cast-In-Place Concrete, for additional requirements.

D. Prevent contamination of planting areas during washing of washed aggregate finish.

END OF SECTION

DocuSign Envelope ID: 330DEBD6-9A9E-4F34-BDCC-1AC1BAA701E9

SECTION 99-033524

POLISHED CONCRETE

PART 1 - GENERAL

1.1 SUMMARY

A. Section Includes: Polished concrete finishing for interior concrete floors.

1.2 SYSTEM DESCRIPTION

A. Provide uniformly polished and sealed (with densifier material) concrete floor finish.

1.3 SUBMITTALS

A. Product Data: Submit product data, including chemical properties and percentage of solids, for each product.

B. Shop Drawings: Show locations of concrete topping slab control joints.

C. Samples:
   1. Submit 12 inch by 18 inch by 2 inch thick samples showing polished concrete finish.
   2. Samples shall illustrate range of color and texture expected in final Work.
   3. Resubmit samples until approved.

D. Submit following Informational Submittals:
   1. Certifications specified in Quality Assurance article.
   2. Qualification Data: Applicator's qualification data.
   3. Field Quality Control – Static Coefficient of Friction Test Reports: Reports of testing specified in PART 3 “Field Quality Control” Article.
   4. Manufacturer's Instructions: Application and finishing instructions, including surface preparation, etches, stains, and sealer application rates for each type of substrate, methods, and techniques.
   5. Maintenance Data: For inclusion in maintenance manual required by Part 7 General Conditions of Special Provisions.
      a. Include manufacturer’s instructions for maintenance of installed work, including methods and frequency recommended for maintaining optimum condition under anticipated use.
      b. Include precautions against cleaning products and methods which may be detrimental to National Floor Safety Institute (NFSI) finishes and performance.

1.4 QUALITY ASSURANCE

A. Applicator's Qualifications:
   1. Experience: Company experienced in performing specified work similar in design, products, and extent to scope of this Project; with a record of successful in-service performance; and with sufficient production capability, facilities, and personnel to produce specified work.
   2. Supervision: Maintain competent supervisor who is at Project during times specified work is in progress, and is currently certified as Craftsman or Master Craftsman by Concrete Polishing Association of America (CPAA).
   3. Manufacturer Qualification: Approved by manufacturer to apply liquid applied products.

B. Certifications:
   1. Submit manufacturer's certificate stating proper amount of materials was ordered and shipped to Project.
   2. Submit polished concrete manufacturer's certificate indicating review of Project conditions and intent to issue extended warranty. Submittal of certificate is required prior to application of materials.

C. Walkway Auditor: Certified by NFSI to test polished floors for static coefficient of friction according to NFSI 101-A.

DocuSign Envelope ID: 330DEBD6-9A9E-4F34-BDCC-1AC1BAA701E9

D. Static Coefficient of Friction: Achieve not less than 0.5 for level floor surfaces as determined by quality control testing according to NFSI 101-A.

1.5 FIELD SAMPLES

A. General: Comply with Part 7 General Conditions of Special Provisions.

B. Coordinate location of field sample with Architect prior to starting work.

C. Finish one 100 sq. ft. sample panel of polished concrete finish for Architect's review of texture, sheen, and workmanship. Provide workmanship and procedures necessary to match Architect's samples.

D. Maintain accepted sample application during construction as standard for Work.

E. Architect's Review:
   1. Architect will review field sample for visual acceptance of materials and workmanship.
   2. Refinish unsatisfactory Work as directed by Architect.

F. Approved samples may remain as part of the Work.

1.6 PRE-INSTALLATION CONFERENCE

A. Conduct pre-installation conference.

B. Arrange for manufacturer's technical representative to be on Project site to advise applicator of proper procedures and precautions and to observe application methods of products.

1.7 DELIVERY, STORAGE, AND HANDLING

A. Deliver, store, and handle products in accordance manufacturer’s instructions.

B. Store products above 50 degrees F, but no greater than 85 degrees F, unless otherwise recommended by manufacturer.

1.8 PROJECT CONDITIONS

A. Environmental Requirements:
   1. Comply with local air pollution and safety regulations of governing authorities while performing concrete polishing operations.
   2. Do not apply materials when ambient or substrate surface temperatures are below 40 degrees F or higher than 100 degrees F.
   3. Provide mechanical ventilation during and after application to dissipate fumes if natural ventilation is insufficient.

B. Protection:
   1. Protect concrete slabs from staining prior to floor finishing operations.
   2. Provide suitable floor coverings when operating hydraulic equipment.
   3. Do not allow pipe cutting or threading machines on slabs scheduled for polished concrete finish.

1.9 SCHEDULING

A. Schedule application of products at proper time intervals after concrete finishing and curing operations.

B. Maintain proper moisture content of concrete before, during, and after application of specified products.

1.10 WARRANTY

A. Warrant polished concrete system to be free of defects related to material deficiency and workmanship for 5 years.

B. Warranty period begins at date of Substantial Completion.

DocuSign Envelope ID: 330DEBD6-9A9E-4F34-BDCC-1AC1BAA701E9

PART 2 - PRODUCTS

2.1 MATERIALS

A. Provide materials, equipment, and personnel required to achieve specified finish.

B. Polished Concrete Chemical Sealer/Hardener/Densifier Compounds:
   1. High performance chemical densifier manufactured specifically for application with polished concrete.
   2. Acceptable System:
      a. Formula One Polished Concrete System, L.M. Scofield, Los Angeles, CA.
      b. FGS/Permashine, L&M Construction Chemicals, Inc., Omaha, NE.
      c. Certi-Shine, Vexcon Chemicals, Inc., Philadelphia, PA
      d. Perfect Polish.

C. Liquid Densifier: Odorless, non-hazardous, Low VOC silicate that penetrates concrete to react with free lime and calcium hydroxide to produce permanent chemical reaction that hardens and densifies concrete surface.
   1. Sealers: Only use sealers and densifiers in the building that meet or do not exceed the VOC limits of Cal-GREEN Table 5.504.4.3 for VOC Content Limits for Architectural Coatings.

D. Polish Guard (Sealer): Non-film forming, stain resistant, food resistant, chemical stain resistant, impregnating sealer designed to be used on concrete surfaces previously densified.

2.2 ACCESSORIES

A. Patching Compound: Compound composed of 40 percent portland cement, 45 percent limestone, and 15 percent vinyl acetate copolymer, when mixed with dust salvaged from grinding process forms a paste that hardens when surface imperfections are filled.

B. Grout Material: Clear modified silicate sealant, containing no pore clogging latex, when mixed with dust salvaged from grinding process forms a paste that reacts with calcium hydroxide in concrete that hardens when surface imperfections are filled.

C. Protective Cover: Non-woven, puncture and tear resistant, polypropylene fibers laminated with a multi-ply, textured membrane, not less than 18 mils in thickness.

2.3 POLISHING EQUIPMENT

A. Field Grinding and Polishing Equipment:
   1. Variable speed, multiple head, counter-rotating, walk-behind machine with not less than 600 pounds of down pressure on grinding or diamond polishing pads.
   2. If dry grinding, honing, or polishing, use dust extraction equipment with flow rate suitable for dust generated, with squeegee attachments.

B. Edge Grinding and Polishing Equipment: Hand-held or walk-behind machines which produces same results, without noticeable differences, as field grinding and polishing equipment.

C. Burnishing Equipment: High speed walk-behind or ride-on machines capable of generating 1000 to 2000 revolutions per minute and with sufficient head pressure of not less than 20 pounds to raise floor temperature by 20 degrees F.

D. Metal Bonded Pads: Grinding pads with embedded industrial grade diamonds of varying grits fabricated for mounting on equipment.

E. Resin Bonded Pads: Polishing pads with embedded industrial grade diamonds of varying grits fabricated for mounting on equipment.

F. Burnishing Pads: Maintenance pads for use with high speed burnishing equipment.

PART 3 - EXECUTION

3.1 EXAMINATION

A. Examine conditions and proceed with work when substrates are ready.

DocuSign Envelope ID: 330DEBD6-9A9E-4F34-BDCC-1AC1BAA701E9

B. Verify that surfaces are clean, dry, dust free, and free of efflorescence, oil or other matter detrimental to sealer/hardener application.

C. Verify that joint sealant work in adjoining surfaces is complete prior to applications of sealers. Delay application until sealants have cured.

3.2 PREPARATION

A. Provide protection as necessary to protect adjacent materials and surfaces from dirt, dust, and other surface or physical damage.

B. Remove loose particles, foreign matter, and oil by method which will not affect sealer/hardener application.

C. Prepare surfaces in accordance with manufacturer's directions.

D. Provide protection as necessary to protect adjacent materials and surfaces from dirt, dust, spillage, overspray and other surface or physical damage.

E. Once polished concrete flooring operations begin, do not allow construction traffic in work area until floor is completely finished and covered with protective materials to prevent damage and staining.

3.3 POLISHING CONCRETE FLOORS

A. General: Follow manufacturer’s instructions and use same procedures and personnel used in creating approved field sample. Approved sample will be used to judge acceptability of polished concrete finishing.

B. Initial Grinding:
   1. Use grinding equipment with metal bonded grinding pads.
   2. Begin grinding in one direction using sufficient size grit pad.
   3. Make sequential passes with each pass perpendicular to previous pass using finer grit pad with each pass, up to 150 grit.
   4. Achieve maximum refinement with each pass before proceeding to finer grit pads.
   5. Vacuum floor using squeegee vacuum attachment after each pass.
   6. Continue grinding until aggregate exposure matches approved field mock-ups.

C. Treating Surface Imperfections:
   1. Mix patching compound and grout material with dust created by grinding operations to match color of adjacent concrete surface.
   2. Fill surface imperfections including, but not limited to, holes, surface damage, small and micro cracks, air holes, pop-outs, and voids.
   3. Work compound and treatment until color differences between concrete surface and filled surface imperfections are not reasonably noticeable when viewed from 10 feet away under lighting conditions that will be present after construction.

D. Liquid Densifier Application: Apply undiluted to point of rejection, remove excess liquid, and allow to cure according to manufacturer’s instructions.

E. Grout Grinding:
   1. Use grinding equipment and appropriate grit grinding pads.
   2. While applying fresh grout material prior to, grind concrete in direction perpendicular to initial grinding to remove scratches.
   3. Vacuum floor using squeegee vacuum attachment after each pass.

F. Honing:
   1. Use grinding equipment with resin bonded grinding pads.
   2. Grind concrete in one direction starting with 50 grit pad and make as many sequential passes required to remove scratches, each pass perpendicular to previous pass, up to 400 grit pad reaching maximum refinement with each pass before proceeding to finer grit pads.
   3. Auto scrub or vacuum floor using squeegee vacuum attachment after each pass.

G. Polishing:
   1. Use polishing equipment with resin bonded polishing and burnishing pads.

DocuSign Envelope ID: 330DEBD6-9A9E-4F34-BDCC-1AC1BAA701E9

2. Begin polishing in one direction starting with 800 grit pad.
3. Make sequential passes with each pass perpendicular to previous pass using finer grit pad with each pass, up to 3000 grit.
4. Achieve maximum refinement with each pass before proceeding to finer grit pads.
5. Auto scrub or vacuum floor using squeegee vacuum attachment after each pass.
6. Continue polishing until gloss appearance, as measured according to ASTM E430, matches approved field sample.

H. Polish Guard: Uniformly apply and remove excessive liquid according to manufacturer's instructions.

I. Final Polish: Using burnishing equipment and finest grit burnishing pads, burnish to uniform sheen matching approved field sample.

J. Final Polished Concrete Floor Finish:
1. Class C – Medium Aggregate Finish: Remove not more than 1/8 inch of concrete surface by grinding and polishing resulting in majority of exposure displaying medium aggregate with no, or small amount of, large aggregate at random locations.
2. Level 2 – Medium Gloss Appearance:
   a. Procedure: Not less than 5 step process with full refinement of each diamond pad up to 800 grit resin bonded pad with one application of densifier.
   b. Gloss Reading: Not less than 55 according to ASTM E430 before polish guard application.

3.4 FIELD QUALITY CONTROL

A. Field Testing: Engage a qualified walkway auditor to perform field testing according to NFSI 101-A to determine if polished concrete floor finish complies with specified static coefficient of friction.

3.5 ADJUSTING

A. Repair or replace adjacent Work which has been damaged by finishing operations.

3.6 CLEANING

A. Clean-up and remove debris daily.

B. Clean spillage, overspray, or drift from adjacent surfaces; remove immediately in accordance with manufacturer's instructions.

3.7 CLOSEOUT ACTIVITIES

A. Maintenance Training: CPAA Master Craftsman shall train Owner's designated personnel in proper procedures for maintaining polished concrete floor.

3.8 PROTECTION

A. Protect finished work.

B. Once polished concrete flooring operations begin, do not allow construction traffic in work area until floor is completely finished and covered with protective materials to prevent damage and staining.

C. Protect finished concrete surfaces from damage by construction equipment and operations.

D. Covering: After completion of polishing, protect polished floors from subsequent construction activities with protective covering.

END OF SECTION

DocuSign Envelope ID: 330DEBD6-9A9E-4F34-BDCC-1AC1BAA701E9

SECTION 99-035400

CAST UNDERLAYMENT

PART 1 - GENERAL

1.1 SUMMARY

A. Section Includes:
   1. Cast fill and patching for existing concrete floors.

1.2 SUBMITTALS

A. Product Data:
   1. Submit product data for underlayment.
   2. Indicate trade name of system proposed, generic name and type, performance characteristics, and chemical resistance.

B. Submit following Informational Submittals:
   1. Test Reports: Submit written results of testing specified as part of Field Quality Control article.
   2. Certifications specified in Quality Assurance article.
   3. Qualification Data: Manufacturer's and applicator's qualification data.
   4. Manufacturer's instructions.
   5. Manufacturer's field reports.

1.3 QUALITY ASSURANCE

A. Manufacturer Qualifications: Company specializing in manufacturing Products specified in this Section with minimum 5 years documented experience.

B. Applicator Qualifications: Acceptable to manufacturer with experience on at least 5 projects of similar nature in past 5 years.

C. Certifications: Submit manufacturer's certification that products furnished for Project meet or exceed specified requirements.

1.4 PRE-INSTALLATION CONFERENCE

A. Conduct pre-installation conference.

B. Verify existing conditions, preparation requirements, and finishing requirements.

1.5 DELIVERY, STORAGE, AND HANDLING

A. Deliver, store, and handle products in accordance manufacturer’s instructions.

1.6 PROJECT CONDITIONS

A. Do not install underlayment until floor penetrations and peripheral work is complete.

B. Environmental Requirements:
   1. Underlayment is for interior use only.
   2. Enclose building interior before, during and after installation.
   3. Comply with more restrictive of following or manufacturer's written requirements under which products can be installed.
   4. Maintain minimum ambient temperature of 50 degrees F for 24 hours prior, during, and 72 hours after installation of underlayment.
   5. Ventilate spaces to remove excess moisture during curing process. 5-7 days are usually adequate drying time. Test for dryness in accordance with manufacturer's recommendations.

DocuSign Envelope ID: 330DEBD6-9A9E-4F34-BDCC-1AC1BAA701E9

1.7 WARRANTY

A. Provide written warranty, in a form acceptable by Owner, from material manufacturer and countersigned by applicator, stating that system installed will perform satisfactorily for period of 5 years from date of Substantial Completion.

B. Warranty with disclaimer disallowing implied warranties of merchantability and/or fitness for a particular purpose or other disclaimers that reduce Owner protection is not acceptable.

PART 2 - PRODUCTS

2.1 MANUFACTURERS AND PRODUCTS

A. Acceptable Trowelable Cement Based Products and Manufacturers:
   1. Ardex SD-P, Ardex, Inc.
   2. Mapecem Quickpatch, Mapei.
   3. Duracrete, L&M Construction Chemicals, Inc.
   4. Sonneborn Sonopatch 100, DeGussa Construction Chemicals.

2.2 MATERIALS

A. Underlayment:
   1. Repair Trowel Type:
      a. Non-shrinking, trowelable grade cement based mix, containing no gypsum, for use over concrete substrates.
      b. Locations: Existing concrete floors
      c. Blend cement materials to match existing concrete floor color as closely as possible.
   2. Thickness:
      a. Trowel Grade: 1/2 inch to 5 inch with addition of manufacturer approved aggregate.
   3. Subfloor Adhesive VOC: Less than 50 g/L.
   4. Compressive Strength: 3000 psi minimum at 28 days.

B. Subfloor Adhesives shall meet or exceed the VOC and chemical component limits of SCAQMD Rule 1168 and Cal-GREEN Table 5.504.4.1 Adhesive VOC Limit requirements.

C. Bonding Agent/Crack Fillers: Type recommended by underlayment manufacturer for use over substrate encountered.

D. Aggregate Sand: Comply with underlayment manufacturer requirements.

E. Water: Potable; free from impurities.

2.3 MIXES

A. Site mix materials in accordance with manufacturer's instructions.

B. Mix to achieve proper consistency as recommended by manufacturer's instructions.

PART 3 - EXECUTION

3.1 EXAMINATION

A. Examine conditions and proceed with work when substrates are ready.

B. Verify substrate surfaces are clean, dry, free from efflorescence, wax, curing compounds, and do not contain petroleum by-products or other compounds detrimental to underlayment material bond to substrate.

3.2 PREPARATION

A. Remove substrate irregularities. Fill voids and joints with filler. Finish smooth.

B. Seal penetrations through substrate.

C. Vacuum clean surfaces.

D. Prime substrate in accordance with manufacturer's instructions. Allow to dry.

DocuSign Envelope ID: 330DEBD6-9A9E-4F34-BDCC-1AC1BAA701E9

3.3 INSTALLATION

A. Install underlayment in accordance with manufacturer’s instructions.

B. Place to thickness indicated.

C. Air cure in accordance with manufacturer's instructions.

3.4 FIELD QUALITY CONTROL

A. Tests: Field tests will be performed for compressive strength verification using 2 inch cube molds.

B. Manufacturer's Field Services:

1. Notify manufacturer prior to start of Work and make arrangements for manufacturer's technical representative to be present during first day's work to verify work is being conducted in accordance with their recommendations.
2. Submit summary report.

3.5 PROTECTION

A. Protect finished work.

B. Do not permit traffic over unprotected floor. Place temporary wood planking or plywood over underlayment wherever it will be subjected to traffic or concentrated loads.

END OF SECTION

DocuSign Envelope ID: 330DEBD6-9A9E-4F34-BDCC-1AC1BAA701E9

SECTION 99-033005
CAST-IN-PLACE CONCRETE – SEISMIC RETROFIT

PART1 - GENERAL

1.1 SUMMARY

A. Scope: This work consists of constructing cast-in-place concrete facilities pedestal enlargements for the seismic retrofit of the concrete column pedestals.

B. Concrete:
   1. Concrete must comply with section 90. The minimum required compressive strength must be 4000 psi at 28 days.

C. Reinforcement: Reinforcement must comply with section 52, except you may use deformed bars complying with ASTM A 706/A 706M, Grade 60.

1.2 SUBMITTALS

A. Product Data:
   1. Manufacturer's descriptive data, installation and use instructions for admixtures, curing compound, must be submitted.
   2. Descriptive data must be delivered to the Engineer at the job site.

B. Concrete Mix Designs: Submit copies of concrete mix designs.

C. Certificates of Compliance: Submit a certificate of compliance when required.

PART 2 - PRODUCT

2.1 CONCRETE MIXES

A. The amount of cementitious material used per cubic yard of concrete must be 800 pounds.

B. In addition to the above requirements, concrete must comply with section 90-1.02H.

2.2 FORM MATERIALS

A. Forms for Exposed Finish Concrete:
   1. Forms for exposed surfaces must be plywood, metal or other panel type materials. Plywood must be not less than 5/8 inch thick and without scars, dents, and delaminations. Forms must be furnished in largest practical pieces to minimize number of joints.
   2. Plywood must comply with the requirements of U. S. Product Standard PS-1 for Exterior B-B (Concrete Form) Class I.
   3. Forms for edges of slabs must be nominal 2-inch solid stock lumber, plywood, or metal forms.

B. Forms for Unexposed Finish Concrete: Forms for unexposed finish concrete surfaces must be plywood, lumber, metal, or other acceptable material.

C. Form Oil: Form oil must be commercial quality form oil which will permit the ready release of the forms and will not discolor the concrete.

2.3 RELATED MATERIALS

A. Anchor Bolts and Anchor Rods, Nuts and Washers must comply with section 99-051205

B. Curing Compound: Curing compound must be curing compound no. 6.

PART 3 - EXECUTION

3.1 PREPARATION

A. Existing Concrete Construction:

DocuSign Envelope ID: 330DEBD6-9A9E-4F34-BDCC-1AC1BAA701E9

1. Where fresh concrete joins existing or previously placed concrete or masonry, the contact surfaces of the existing or previously placed material must be roughened, cleaned, flushed with water and allowed to dry to a surface dry condition immediately prior to placing the fresh concrete. The roughened surface must be no smoother than a wood trowelled surface. Cleaning of the contact surfaces must remove laitance, curing compounds, debris, dirt and such other substances or materials which would prevent bonding of the fresh concrete.
2. Abrasive blast methods must be used to clean horizontal construction joints to the extent that clean aggregate is exposed.
3. Exposed reinforcing steel located at the contact surfaces which is to be encased in the fresh concrete must be cleaned to remove any substance or material that would prevent bonding of the fresh concrete.

B. Forms:
1. Forms must be mortar tight, true to the dimensions, lines, and grades shown, securely fastened and supported, and of adequate rigidity to prevent distortion during placing of concrete.
2. Forms for exposed surfaces must be constructed with triangular fillets not less than 3/4" x 3/4" attached so as to prevent mortar runs and to produce smooth straight chamfers at all sharp edges of the concrete.
3. Form fasteners must be removable without chipping, spalling, heating or otherwise damaging the concrete surface. Form ties must be removed to a depth of at least one inch below the surface of the concrete.
4. The inside surfaces of forms must be cleaned of all dirt, mortar and foreign material. Forms must be thoroughly coated with form oil prior to use.
5. Forms must not be stripped until at least 40 hours after placing concrete, except soffit forms and supports must not be released or removed until at least 10 days after placing concrete.

C. Placing Reinforcement:
1. If authorized, you may use plastic supports to hold reinforcement in position.
2. Set wire ties with ends directed into concrete, away from exposed concrete surfaces.

3.2 PLACING CONCRETE

A. Concrete must be placed under section 51-1.03D.

B. Concrete must be deposited and consolidated in a continuous operation within limits of construction joints, until the placing of the panel or section is completed.

3.3 FINISHING CONCRETE SURFACES

A. Finishing Unformed Surfaces:
1. Slabs must be placed full thickness to finish elevation and leveled to screeds by use of long straightedges. The screeds must be set to grade at approximately 6-foot centers. After leveling, screeds must be removed and the surface must be floated with wooden floats.
2. The floated surface must be trowelled with steel trowels. Troweling must form a dense, smooth and true finish. Walkways, pedestrian ramps, stairs and outdoor slabs for pedestrian traffic must be given a non-slip broom finish unless a different finish is described.
3. The application of cement dust coat will not be permitted.
4. Finished surfaces of floor slabs must not deviate more than 1/8 inch from the lower edge of a 10-foot long straight edge.

B. Finishing Formed Surfaces:
1. Formed concrete surfaces must be finished by filling holes or depressions in the surface, repairing all rock pockets, and removing fins. All surfaces of formed concrete exposed to view must have stains and discolorations removed, unsightly bulges removed, and all areas which do not exhibit the required smooth, even surface of uniform texture and appearance must be sanded with power sanders or other authorized abrasive means until smooth, even surfaces of uniform texture and appearance are obtained.
2. Cement mortar, patching and finishing materials used to finish exposed surfaces of concrete must closely match the color of surrounding surfaces.

DocuSign Envelope ID: 330DEBD6-9A9E-4F34-BDCC-1AC1BAA701E9

3.4 CURING CONCRETE

A. Freshly placed concrete must be protected from premature drying and excessive cold or hot temperatures.

B. Concrete surfaces, other than floor slabs, must be cured by the forms-in-place method or the water method as specified for structures.

3.5 PROTECTING CONCRETE

A. Vehicles, equipment, or concentrated loads weighing more than 300 pounds individually and material stockpiles weighing more than 50 pounds per square foot will not be permitted on the concrete within 10 calendar days after placing.

END OF SECTION

DocuSign Envelope ID: 330DEBD6-9A9E-4F34-BDCC-1AC1BAA701E9

SECTION 99-036035
DRILL AND BOND DOWELS – SEISMIC RETROFIT

PART 1 - GENERAL

1.1 SUMMARY

A. Scope: This work consists of drilling holes in existing concrete and installing and bonding bar reinforcing steel dowels into such drilled holes in existing concrete pedestals for the seismic retrofit.

PART 2 - PRODUCT

A. Bonding Material: The bonding material must be HILTI HIT RE 500 or equal approved by the Engineer.

B. Dowels: Dowels must be bar reinforcing steel, under section 99-033005.

PART 3 - EXECUTION

3.1 INSTALLATION:

A. The holes must be drilled by methods that will not shatter or damage the concrete adjacent to the holes. The diameter of drilled holes must be 1/2 inch larger than the nominal diameter of the dowels unless otherwise shown.

B. Immediately prior to placing the dowels, the holes must be cleaned and prepared per manufactures recommendations.

C. Sufficient bonding material must be placed in the hole so that no voids remain after the dowels are inserted.

D. Dowels which fail to bond or are damaged before new concrete is placed must be removed and replaced.

E. Bond material must be installed per manufacture's recommendations.

F. The surface of any dowel coated with zinc or cadmium must be coated with a colored lacquer before installation of the dowel. The lacquer must be allowed to dry thoroughly before embedment of said dowels.

END OF SECTION

DocuSign Envelope ID: 330DEBD6-9A9E-4F34-BDCC-1AC1BAA701E9

SECTION 99-042200

CONCRETE MASONRY UNITS

PART 1 - GENERAL

1.1 SUMMARY

A. Section Includes:
1. Concrete Masonry Units
2. Epoxy Bonding Adhesive
3. Control Joint Materials
4. Joint Reinforcement
5. Reinforcing Steel
6. Precast Beams, Lintels and Copings
7. Mortar
8. Grout
9. Surface Sealer

1.2 REFERENCES

A. American Concrete Institute (ACI):
1. ACI 530 Building Code Requirements for Masonry Structures
2. ACI 530.1 Specifications for Masonry Structures

B. American Society for Testing and Materials (ASTM):
1. ASTM C33 Specification for Concrete Aggregates
2. ASTM C90 Specification for Hollow Load-Bearing Concrete Masonry Units
3. ASTM C91 Specification for Masonry Cement
4. ASTM C94 Specification for Ready-Mixed Concrete
5. ASTM C109 Test Method for Compressive Strength of Hydraulic Cement Mortars (Using 2-in. or 50-mm Cube Specimens)
6. ASTM C143 Test Method for Slump of Hydraulic Cement Concrete
7. ASTM C144 Specification for Aggregate for Masonry Mortar
8. ASTM C150 Specification for Portland Cement
9. ASTM C207 Specification for Hydrated Lime for Masonry Purposes
10. ASTM C270 Specification for Mortar for Unit Masonry
11. ASTM C404 Specification for Aggregates for Masonry Grout
12. ASTM C476 Specification for Grout Masonry
13. ASTM C881 Specification for Epoxy-Resin-Base Bonding Systems for Concrete
14. ASTM C979 Specification for Pigments for Integrally Colored Concrete
15. ASTM C1006 Test Method for Splitting Tensile Strength of Masonry Units
16. ASTM C1019 Test Method for Sampling and Testing Grout

C. State of California, Department of Transportation, 2006 Standard Specifications and Amendments, (Caltrans):
1. Section 52 Reinforcement
2. Section 90 Portland Cement Concrete

1.3 REGULATORY REQUIRMENTS

A. In addition to the foregoing referenced standards, the regulatory requirements that govern the work of this Section include the following governing code:

California Code of Regulations (CCR), Title 24, Part 2, California Building Code, Chapter 21, “Masonry,” and Chapter 21A, “Masonry.”

1.4 SUBMITTALS

DocuSign Envelope ID: 330DEBD6-9A9E-4F34-BDCC-1AC1BAA701E9

A. Product Data: Submit manufacturer's product data for block, including available color range, epoxy adhesive, joint reinforcement, and control-joint materials, along with installation instructions where applicable.

B. Working Drawings:
   1. Submit detailed working drawings of unit masonry, showing type of mortar joints, bond pattern, reinforcing steel, connecting dowels, joint reinforcement, grouted cells, and control joints.
   2. Submit calculations and working drawings for temporary supports of masonry lintels. Design and construct temporary supports to provide the necessary rigidity and to support loads which will be applied. Design calculations and working drawings must be stamped and signed by an engineer who is registered as a Civil or Structural Engineer in the State of California. The expiration date of the registration must be shown.

C. Samples: Submit full-size samples of block and samples of colored mortar for approval. Block and colored joint mortar require approval of the Engineer before they may be used in the concrete masonry work.

D. Grout Mix Design: Submit a grout mix design for each grout mix proposed for use. Submit a revised grout mix design for any proposed change to the proportions of an approved grout mix.

E. Qualification Data: Submit qualification data for proposed testing laboratory.

F. Certificates: Submit certification stating that concrete masonry units meet specification requirements and that masonry units conform with the special strength requirements of these Specifications. Each certificate shall be signed by the masonry unit manufacturer and shall contain the name of the manufacturer, the project location, and the quantity and dates of shipment or delivery to which the certificate applies.

G. Field Quality Control Plan:
   1. Submit a written Field Quality Control Plan that identifies the inspector, the testing laboratory, and the procedures to be used. The plan must conform to these specifications and the CBC.
   2. Designate a Masonry Quality Control Manager (MQCM) in the Field Quality Control Plan. The MQCM must be directly responsible to the Contractor for the quality of masonry, including materials and workmanship, performed by the Contractor and subcontractors.
   3. The MQCM must be the sole individual responsible to the Contractor for submitting, receiving, and approving all correspondence, required submittals, and reports to and from the Engineer.
   4. The MQCM must be the sole individual responsible to the Contractor for submitting, receiving, and approving all correspondence, required submittals, and reports to and from the Engineer.

1.5 QUALITY ASSURANCE

A. Concrete unit masonry work shall conform with applicable requirements of the California Building Code, Chapters 21 and 21A, ACI 530, and ACI 530.1, except as modified in these Specifications.

B. Construction tolerances for concrete unit masonry shall conform with ACI 530.1.

1.6 DELIVERY, STORAGE, AND HANDLING

A. Deliver masonry materials to the project in an undamaged condition.

B. Store CMUs on elevated platforms in a dry location. If CMUs are not stored in an enclosed location, cover tops and sides of stacks with waterproof sheeting, securely tied. If CMUs become wet, do not install until they are dry.

C. Store cementitious materials on elevated platforms and in a dry location. Do not use cementitious materials that have become damp.

D. Store aggregates where grading and other required characteristics can be maintained and contamination avoided.

E. Store masonry accessories, including metal items, to prevent corrosion and accumulation of dirt and oil.

DocuSign Envelope ID: 330DEBD6-9A9E-4F34-BDCC-1AC1BAA701E9

F. Prevent damage, contamination, corrosion, or other deterioration to masonry materials when handling.

1.7 PROJECT CONDITIONS

A. Protection of Masonry: Cover partially completed masonry, tops of walls, projections, and sills with waterproof sheeting when construction is not in progress.

B. Stain Prevention:
   1. Prevent grout, mortar, and soil from staining the face of masonry to be left exposed or painted. Immediately remove grout, mortar, and soil that come in contact with such masonry.
   2. Protect the base of walls from rain-splashed mud and from mortar splatter by spreading coverings on the ground and over wall surfaces.
   3. Protect sills, ledges, and projections from mortar droppings. Protect surfaces of door frames, and other similar products with painted and integral finishes, from mortar droppings.

PART 2 - PRODUCTS

2.1 MATERIALS

A. Concrete Masonry Units (Concrete Block):
   1. Concrete masonry units shall be of modular face dimensions and thicknesses indicated. Furnish necessary shapes and sizes, bond-beam units, and corner units as required to satisfy conditions indicated. Include half-size units where indicated or required. Units shall be closed-end.
   2. Concrete masonry units shall be hollow load-bearing units conforming to ASTM C90, and shall be No. 1 Normal Weight, Type I - Moisture Controlled Units, minimum Grade N. Units shall have a maximum linear shrinkage of 0.06 percent, and shall meet water absorption requirements of ASTM C90.
   3. Concrete masonry units shall be normal cement-colored units with standard face surfaces.

B. Burnished Block (Ground-face) Concrete Masonry Units:
   1. Face: Smooth ground textured, exposed aggregate honed appearance.
   2. Concrete masonry units shall be normal cement-colored units.
   3. Concrete masonry units shall be of modular face dimensions and thicknesses indicated. Furnish necessary shapes and sizes, bond-beam units, and corner units as required to satisfy conditions indicated. Include half-size units where indicated or required. Units shall be closed-end.
   4. Concrete masonry units shall be hollow load-bearing units conforming to ASTM C90, and shall be No. 1 Normal Weight, Type I - Moisture Controlled Units, minimum Grade N. Units shall have a maximum linear shrinkage of 0.06 percent, and shall meet water absorption requirements of ASTM C90.
   5. Cap of CMU walls shall be:
      a. Burnished CMU
      b. The joints of the cap at the railing verticals need to be cut on a Diamond table saw by the contractor
      c. All railings to protrude at a CMU joint per Architectural Details

C. Mortar Cement: ASTM C150, Type II Portland cement, low alkali.

D. Grout Cementitious Material: Cementitious material must comply with Section 90-2.01C, "Required Use Of Supplementary Cementitious Materials," of the Standard Specifications and include one of the following:
   1. Cement complying with ASTM C 150, Type II, and supplementary cementitious material.
   2. Blended hydraulic cement complying with ASTM C 595, Type IP (MS).

E. Lime: ASTM C207, hydrated, Type S.

F. Mortar Sand: ASTM C144, natural sand, clean and graded.

G. Mortar Coloring Pigment: ASTM C979, manufactured, inert mineral oxides in color or colors as selected and approved by the Engineer.

DocuSign Envelope ID: 330DEBD6-9A9E-4F34-BDCC-1AC1BAA701E9

H. Grout Aggregate: ASTM C33 or ASTM C404, clean and graded concrete aggregates, proportioned by volume as follows: 3 parts fine and graded concrete aggregate to 2 parts of graded 3/8-inch maximum size coarse aggregate. Soundness loss must not exceed 10 percent when tested under California Test 214.

I. Water: Fresh, clean and potable, and free from such amounts of mineral and organic substances as would adversely affect the hardening of cement mortar.

J. Epoxy Bonding Adhesive: Adhesive for bonding of mortar bed to concrete slabs shall be an epoxy-based bonding agent conforming to ASTM C881, Type V, tinted to show by visual inspection where it has been applied.

K. Control Joint Materials: Conform with requirements of ACI 530.1.

L. Joint Reinforcement: No. 9 gage ladder or truss type steel wire conforming to ACI 530.1.

M. Reinforcing Steel: Provide reinforcing steel for grouted block masonry under this Section in accordance with the requirements of Section 52, "Reinforcement," of the Standard Specifications and the project special provisions, and ACI 530.1.

2.2 MORTAR

A. Mortar Type and Mixing Requirements:

1. Mortar for grouted unit masonry shall be Type S mortar in accordance with the California Building Code, Chapter 21 and 21A, ACI 530.1, and ASTM C270, with a minimum compressive strength at 28 days of 1,500 psi.
2. The use of an admixture for the purpose of reducing water content in mortar will be permitted, provided the strength of the mortar is not reduced.
3. Mortar shall be job mixed and, in lieu of specific requirements specified herein, shall conform with ASTM C270, including measurement, mixing, proportioning, and water retention.
4. Accurately measure mortar ingredients and mix a minimum of three minutes after water has been added, in a mechanical batch mixer, using sufficient water to produce a workable and plastic consistency.
5. Use mortar within 2-1/2 hours after mixing when air temperature is 80 degrees or higher, and within 3-1/2 hours when air temperature is below 80 degrees. Discard any mortar that has been mixed longer or that has begun to set. If necessary, mortar may be retempered within this time limit, by replacing only water lost due to evaporation and by thorough remixing.

B. Colored Joint Mortar: Provide colored mortar for exposed masonry joints where indicated. Color shall be as approved by the Engineer from samples prepared and submitted by the Contractor. Pigment amount for selected color and mixing of colored mortar shall conform with the pigment manufacturer's instructions.

2.3 GROUT

A. Grout shall be Coarse Grout, as defined in ASTM C476, with a minimum compressive strength at 28 days of 2,500 psi, and shall be proportioned by volume in accordance with ACI 530.1.

B. Grout mix shall be designed in accordance with ASTM C94 for manufacturer designed mixes, and for handling by an approved grout pump. Slump shall be 10 inches.

C. The use of an admixture for the purpose of reducing water content in grout and adding flowability will be permitted, provided the strength of the grout is not reduced. Admixture shall be added to the mix as recommended by the manufacturer for the purpose intended.

2.4 SURFACE SEALER

A. Provide a water-based, VOC-compliant, clear, penetrating water-repellent sealer, designed to provide long-term protection against water absorption, for exterior concrete unit masonry surfaces. Submit sealer performance data and VOC compliance verification for approval.

PART 3 - EXECUTION

3.1 LAYING CONCRETE MASONRY UNITS

DocuSign Envelope ID: 330DEBD6-9A9E-4F34-BDCC-1AC1BAA701E9

A. Installation Standards: Comply with applicable requirements of ACI 530.1 and Section 2104, “Construction,” of the CBC.

B. Requirements: Construct concrete unit masonry to dimensions indicated. Concrete masonry units shall be dry when laid. Avoid using less than half-size units in exposed locations. Do not expose cells on any surface. Where concealed, spaces not large enough for full or half-size units may be filled with concrete building brick or mortar.

C. Work Quality:
   1. Masonry work shall be performed by skilled and experienced masons. Erect walls plumb and true to line, with courses level and joints uniform in width, using specified mortar. Vertical joints shall line up plumb in exposed walls.
   2. Concrete masonry units shall be sound and free of cracks and surface defects. Handle units carefully to avoid chipping and breaking. Do not substitute cut units where special shapes are available.
   3. Where pipes penetrate masonry, point neatly and accurately around pipes and ducts.

D. Cutting of Units: Cutting of units shall be kept to a minimum. Perform cutting accurately to accommodate items passing through or embedded in masonry, to meet surfaces that masonry abuts, and to fit various conditions. Cutting of masonry units shall be performed with a power-driven masonry saw. Rub cuts smooth and even with carborundum or emery stone.

E. Bedding and Jointing:
   1. Use full mortar bed and coverage on horizontal and vertical face shells of hollow units. Webs also shall be bedded in mortar. Shove vertical joints tight.
   2. Top surfaces of concrete foundations or other bed joints shall be clean concrete with aggregate exposed before start of laying. Tops of foundations shall be roughened and cleaned to remove laitance for exposing aggregates in the concrete. Where block is to be laid on slabs, bed joints shall be roughened and cleaned, and an epoxy bonding adhesive shall be applied before laying first course of block.

F. Joint Reinforcement: Provide ladder or truss type joint reinforcement, spaced a maximum of 16 inches on center vertically. Place in accordance with ACI 530.1, fully embedded in mortar.

G. Bond Pattern: Lay masonry units in running bond.

H. Alignment of Vertical Cells: Masonry shall be built to preserve the unobstructed vertical continuity of the cells. The vertical alignment shall be sufficient to maintain a clear, unobstructed vertical flue, measuring not less than 3 inches in all directions for grouted masonry.

I. Cleanouts: Cleanout openings shall be provided at the bottoms of cells to be filled with grout. Mortar droppings shall be removed from cells, and cleanouts shall be sealed after inspection and before grout placement.

J. Pipe Chases: Chases and recesses for pipes shall be formed as masonry work is constructed. Do not enclose piping until it has been tested and approved. Make such chases and recesses plumb, with inside joints struck flush, and the interiors kept free of obstructions and cleaned-out upon completion.

K. Anchorage and Embedded Items:
   1. Set accurately in place and bond into masonry, as the masonry work progresses, bolts, straps, hangers, sleeves, anchors, inserts, frames for doors and louvers, and any other anchorage items or attachments as indicated. Provide suitable recesses for other items to be built into masonry. Consult with other trades in advance so their work can be accommodated at correct locations, as masonry work progresses, to avoid cutting and patching.
   2. Cells containing anchorage or built-in items shall be grouted solid.
   3. Where masonry is laid against concrete or metal, the joints between shall be filled with mortar as each course is laid.

L. Joint Finishing:
   1. Pack mortar tightly in joints and wipe wall faces clean as work progresses. Unless otherwise indicated, exposed joints shall be densely tooled concave and smooth with joint tool when mortar is thumbprint hard.
   2. Rake out joints around metal frames in openings 3/4-inch deep for sealant to be applied.

DocuSign Envelope ID: 330DEBD6-9A9E-4F34-BDCC-1AC1BAA701E9

3. Nominal joint size, both vertical and horizontal, shall be 3/8 inch.

M. Joining Work: Step back unfinished work for joining with new work. Toothing shall be resorted to only where unavoidable. Before starting or resuming work, remove loose mortar and foreign matter from work in place, and clean all surfaces of work to be joined.

N. Control Joints: Provide control joints where indicated. Comply with ACI 530.1.

3.2 REINFORCING STEEL

A. Provide reinforcing steel for grouted masonry as indicated. Comply with applicable requirements of ACI 530.1 and Section 52, "Reinforcement," of the Standard Specifications, and the project special provisions .

B. Vertical reinforcing bars shall be placed prior to laying the wall and shall be held in place by standard reinforcing supports. Vertical bars shall be held in position at top and bottom and at intervals not exceeding 190 diameters of the reinforcement or 9 feet, whichever is less. Vertical reinforcing steel shall have a minimum clearance of 1 inch from the masonry. Tolerances for the placement of vertical reinforcement must be ± ½ inch.

C. When a foundation dowel does not line up with a vertical core, it shall not be sloped more than one horizontal in six vertical. Dowels shall be grouted into a core in vertical alignment, even though it is an adjacent cell to the vertical wall reinforcing.

D. Horizontal reinforcing bars for bond-beam or channel units shall be laid on the webs of the units in continuous masonry courses, and shall be solidly embedded in mortar and grout. Horizontal bars shall be tied to vertical bars as the block work progresses. Placing of horizontal reinforcing bars in mortar joints will not be permitted.

E. Reinforcing bars shall be straight except for bends around corners and where bends or hooks are indicated.

F. Reinforcing steel shall be lapped in accordance with ACI 530, Chapter 8. Length of lapped splices shall be not less than 40 bar diameters. Lapped splice bars shall be wire-tied together for the entire length of the splice.

3.3 GROUTING

A. Grouting Requirements:
1. All cells of concrete unit masonry shall be filled solid with grout. Cells containing reinforcement and anchorage or built-in items shall be filled solid with grout. Comply with applicable requirements of ACI 530.1.
2. Spaces around metal frames and other built-in items shall be filled solid with grout or mortar.
3. Reinforcing steel shall be secured in place, inspected, and approved before grouting starts.
4. Mortar droppings and projections shall be kept out of the grout space. Webs, wythes, and reinforcement shall be cleaned of mortar droppings before grout is placed.
5. Grout shall be rodded, puddled, or vibrated in place.
6. Cells shall be filled solid with grout, and pours shall be stopped 1-1/2 inches below the top of a course to form a key at pour joints, except if the joint is at a bond beam, the joint must be ½ inch below the top of the bond beam unit or at the top of the wall.
7. Grouting of beams over openings shall be performed in one continuous operation.

B. Grout Construction:
1. Grout construction, including grout placement and consolidation, shall conform with applicable requirements of ACI 530.1, except as otherwise specified herein.
2. Grout shall be placed in lifts not to exceed 4 feet, with a waiting period of one hour between lifts. The full height of the wall or masonry section shall be placed in one day.
3. Rod or vibrate grout thoroughly the entire height of the pour when first placed to push grout into all spaces and interstices. After the waiting period of an hour, place second lift and rod or vibrate the pour again to penetrate not more than half way into the first lift. Repeat this placing operation, waiting period, and consolidating technique until the top is reached. The top pour or lift shall likewise be reconsolidated after waiting period to allow excess water to be absorbed and escape.

DocuSign Envelope ID: 330DEBD6-9A9E-4F34-BDCC-1AC1BAA701E9

3.4 REPAIRING AND POINTING

A. Upon completion of the work, carefully examine masonry surfaces and cut out and replace broken or defective units. Install new units in fresh mortar to match adjoining units, and point joints to eliminate evidence of replacement. Rake out defective mortar joints and repoint.

B. Remove protective paper. Clean surfaces and polish to uniform luster. Exercise care to avoid damage of finishes.

C. Wash glass on interior and exterior to remove paint, soil, prints and foreign matter. Clean glass only with mild detergent and water following glass manufacturer's instructions. Do not use abrasive materials.

3.5 CLEANING

A. After erection and pointing, masonry shall be cleaned down with stiff brushes and water, followed by a thorough rinsing with clean water. All mortar deposits, stains, or other foreign matter shall be removed from masonry surfaces.

B. After masonry has been fully grouted, laitance and stains that have percolated through the blocks and mortar joints shall be hosed off with water under pressure.

C. The Engineer may direct that certain masonry surfaces or areas be cleaned with a commercial masonry cleaner manufactured for the purpose, in which case follow the instructions or recommendations of the masonry-cleaner manufacturer for cleaning method.

3.6 CURING

A. Masonry work and top of the grout pour shall be damp-cured for at least 7 days to prevent too rapid drying during hot or drying weather, and drying winds.

B. Walls shall be kept moist or damp with water from a fogging nozzle, but shall not be wet to the point that free water drops from the surface.

3.7 SEALER APPLICATION

A. Preparation: Surfaces receiving sealer shall be thoroughly dry and free of all construction stains, surface dirt, and efflorescence.

B. Application: Apply sealer, where concrete unit masonry is exposed to the weather, in accordance with the manufacturer's application instructions and recommendations.

3.8 FIELD QUALITY CONTROL

A. Special Inspection:

1. The Contractor shall employ a special inspector and a testing laboratory to perform inspections and structural tests of masonry to verify the masonry construction conforms to Section 1704, “Special Inspections,” and Section 2105, “Quality Assurance,” of the CBC.
2. Masonry special inspection personnel or testing laboratories used in the work must not be employed or compensated by any subcontractor, or by other persons or entities hired by subcontractors, who will provide other services or materials for the project.
3. The special inspector must be, as a minimum, an ICC certified Structural Masonry Special Inspector. The special inspector must perform the inspections required under Section 1704.5, "Masonry construction" of the CBC.
4. The special inspector must prepare a "Daily Field Report" providing information regarding the specific operations witnessed, including placing of CMUs and bar reinforcing, grouting, fabrication of test specimens, and other observations of importance to the work.
5. A "Daily Field Report" is required for each day that the special inspector is on the jobsite. Deliver a copy of these reports to the Engineer on the day following the preparation.
6. The special inspector must submit a final signed report to the Engineer and to you stating whether the work requiring special inspection was, to the best of the inspector's knowledge, in conformance with the approved plans, specifications, and the applicable workmanship provisions of these specifications and the CBC.

DocuSign Envelope ID: 330DEBD6-9A9E-4F34-BDCC-1AC1BAA701E9

B. Slump Tests: Perform slump tests of grout during grout placement in accordance with ASTM C1019 and ASTM C143.

C. Strength Tests: Provide laboratory tests conforming to the following requirements:
   1. Concrete Masonry Units: Tensile strength tests shall be performed in accordance with ASTM C1006. Three units shall be tested for each 2,000 square feet of wall area.
   2. Mortar: Compressive strength tests shall be performed in accordance with ASTM C109. Three cubes shall be tested for each 2,000 square feet of wall area, one at seven days and two at 28 days.
   3. Grout: Compressive strength tests shall be performed in accordance with ASTM C1019. Three square prisms shall be tested for each 2,000 square feet, or fraction thereof, of wall area.

D. Test Reports: Submit certified copies of all test results to the Engineer for record purposes.

E. Rejection of Masonry; Repair and Replacement: The Engineer shall have authority to reject concrete masonry work that does not meet specification requirements, and to require repair or replacement as necessary to complete the concrete masonry work. Additionally, any work not meeting the requirements of Section 2105, “Quality Assurance,” of the CBC, must be redone and retested. Sampling, inspecting, reworking, and retesting of material will be done at the Contractor’s expense.

END OF SECTION

DocuSign Envelope ID: 330DEBD6-9A9E-4F34-BDCC-1AC1BAA701E9

SECTION 99-051200

STRUCTURAL STEEL

PART 1 - GENERAL

1.1 SECTION INCLUDES

A. Construction: Provide material, labor, equipment, services, tests and inspections necessary for the installation of structural steel including bracing and shoring required for erection and related work.

1.2 RELATED INFORMATION AND REQUIREMENTS

A. Drawings and general provisions of the Contract, including general conditions and Parts 1 through 7 of the Special Provisions Sections, specific Specification Sections listed below, and all other Specification Sections apply to this Section.
   1. 99-032520 Anchors and Dowels in Resin
   2. 99-032530 Expansion Anchors

B. Structural Steel for Building- Seismic Retrofit 99-051205

1.3 REFERENCE DOCUMENTS

A. Standards: Comply with the provisions of the documents listed below and with the requirements described in this Section. Use current editions of documents unless earlier editions are specifically referenced by the governing code or are otherwise indicated.
   1. CBC – 2013 California Building Code.
   2. AISC - American Institute of Steel Construction:
      a. AISC 303 - Code of Standard Practice for Steel Buildings and Bridges, except as follows:
         1) Horizontal and vertical dimensions may not be shown entirely on the Structural Drawings.
         2) Parts 1 through 7 of the Special Provisions requirements and those specified herein shall govern in case of conflict.
      b. ANSI/AISC 341 - Seismic Provisions for Structural Steel Buildings, Including Supplement No. 1.
      c. ANSI/AISC 358 - Prequalified Connections for Special and Intermediate Steel Moment Frames for Seismic Applications.
      d. ANSI/AISC 360 - Specification for Structural Steel Buildings.
      e. AISC - Steel Construction Manual
   3. RCSC – Research Council on Structural Connections “Specification for Structural Joints Using ASTM A 325 or A 490 Bolts.”
   4. SPC - Society for Protective Coatings (formerly Steel Structures Painting Council), designations referenced herein.
   5. ASTM, American Society for Testing and Materials, designations referenced herein.

1.4 DEFINITIONS

A. Structural Steel: As defined in Section 2 of AISC 303.

1.5 SUBMITTALS

A. General: Submittals shall be sent to the Owner’s Representative, or Owner’s Testing Agency, or both, as required herein for review prior to commencing the work. Review of submittals covers the general character of the details and to verify compliance with the performance requirements. Review does not cover checking of quantities, proportions or dimensions. Such review shall not relieve the Contractor from responsibility for executing the work in accordance with the Contract Documents.

B. Mill Analysis Reports: Contractor shall submit certified copies of mill analysis reports covering the chemical and physical properties of the structural steel to the Owner’s Testing Agency for review.

DocuSign Envelope ID: 330DEBD6-9A9E-4F34-BDCC-1AC1BAA701E9

C. Certificates of Conformance: Contractor shall submit to the Owner's Testing Agency for review manufacturer's certificates of conformance for the following materials:
   1. Bolts, nuts, washers
   2. Welding electrodes, fluxes, shielding gases

D. Shop and Erection Drawings: Contractor shall submit shop drawings to the Owner's Representative for review. Shop drawings shall include, but not be limited to, anchor bolt sizes and layout, member sizes and materials, details of members, connections, weld sizes and profiles, sizes and spacing of bolts, surface preparations and finishes, and corresponding erection plans showing the marking, position and orientation of each member and connection. Detail drawings shall indicate the marking of each member as shown on the erection plans.
   1. Complete horizontal and vertical control information may not be shown on the Structural Drawings and the Contractor shall obtain such information from the documents of other disciplines in order to provide a complete submittal. Prior to the preparation of detailed fabrication drawings, the Contractor shall prepare, submit, and obtain approval of coordinated erection drawings complete with horizontal and vertical dimensions.
   2. The Contractor shall survey, review and confirm the as-built conditions prior to developing shop drawings. Field modifications to suit as-built conditions shall be at the Contractor's expense.

E. Contractor's quality control test reports: The Contractor shall submit quality control test reports to the Owner's Representative and Owner's Testing Agency for review prior to shipping material to the job site, and for field work, within 7 days of the work being performed.

1.6 TESTS AND INSPECTIONS

A. Notification:
   1. The Contractor shall notify the Engineer of the work, so the Owner's Testing Agency can be scheduled to test and inspect the work. Notification shall be sufficiently in advance to allow scheduling of tests and inspections, but not less than 24 hours.
   2. The Contractor shall immediately notify the Owner's Representative if the Owner's Testing Agency indicates that quality assurance tests and inspection requirements have not been met.

B. Owner's Quality Assurance Tests and Inspections:
   1. General: Quality assurance tests and inspections shall be the responsibility of the Owner. The Owner shall retain a testing agency, referred to herein as the Owner's Testing Agency, who shall perform the required tests and inspections, prepare written summary reports of tests and inspections, and review submittals.
   2. The Owner's Testing Agency shall submit written procedures, qualifications and reports as specified in ANSI/AISC 341, Appendix Q, Section Q4.
   3. The Owner's Testing Agency shall perform tests and inspections per CBC, Chapter 17 and as follows:
      a. Collect and review certified mill analysis reports.
      b. Review steel identification per CBC Section 2203.2. Material that cannot be identified or has a questionable source shall be tested by the Contractor's Testing Agency.
      c. Collect and review certificates of conformance. Materials not accompanied by manufacturer certificates shall be tested by the Contractor's Testing Agency.
      d. The Owner's Testing Agency shall review Contractor quality control test and inspection reports.

C. Contractor's Quality Control Tests and Inspections:
   1. General: Quality control tests and inspections shall be the responsibility of the Contractor. Where required herein, the Contractor shall retain a testing agency, referred to herein as the Contractor's Testing Agency, to demonstrate that quality control conforms to the requirements of the Contract Documents. Quality Control Test and Inspection Reports shall be prepared and submitted for review.

DocuSign Envelope ID: 330DEBD6-9A9E-4F34-BDCC-1AC1BAA701E9

2. Tension Tests: The Contractor's Testing Agency shall conduct one tension test and one bend test in accordance with ASTM A 370 for each heat of structural steel not accompanied by certified mill analysis reports. Test reports shall be reviewed by the Owner's Testing Agency before placement of steel.
3. Filler Metal Toughness Tests: The Contractor's Testing Agency shall test each type of filler metal not accompanied by the manufacturer's certificate of conformance for the filler metal toughness requirements in Part 2 of this specification. Test procedures shall conform to ANSI/AISC 341, Appendix X.

1.7 CONTRACTOR'S ENGINEERING SERVICES

A. General: Where engineering services are required herein, the Contractor shall retain a Structural Engineer registered in the State of California, referred to herein as the Contractor's Engineer.
   1. Where explicitly allowed, a Civil Engineer registered in the State of California is acceptable as the Contractor's Engineer.
   2. Documents prepared by the Contractor's Engineer shall be stamped and signed.

B. Shoring: The Contractor's Engineer shall design, detail, inspect, and provide scheduled procedures for shoring of composite steel framing. The design shall conform to the applicable Federal, State and local requirements. Drawings shall include detailed procedures and schedules for installation, sequencing and removal of shoring.

PART 2 - PRODUCTS

2.1 STRUCTURAL STEEL MATERIALS

A. Plates and Bars: ASTM A 36, typical.

B. Channel and Angles: ASTM A 36.

PART 3 - EXECUTION

3.1 PROTECTION OF MATERIALS

A. Protect materials from damage, weather, and contaminants such as grease, oil, and dirt.

3.2 COORDINATION

A. Coordinate locations and sizes of penetrations and openings in structural steel with the Drawings and the work of other trades. Verify conformance with the structural requirements shown on the Drawings.

3.3 FABRICATION

A. General: Fabricate structural steel in accordance with AISC 303 and ANSI/AISC 360.
   1. Conform to the additional requirements of ANSI/AISC 341 for members and connections in the SLRS.

B. Dimensions: Contractor shall obtain dimensions from the Structural Drawings, drawings of the other disciplines, and field measurements as necessary for the fabrication of the structural steel. Complete dimensions may not be shown on the Structural Drawings.

C. Thermal Cutting: Thermal cutting shall be done by machine to the greatest extent possible. Plane thermally cut edges as necessary to comply with edge preparation requirements of AWS D1.1.

D. Machine Bolts: Install machine bolts snug tight, unless otherwise noted on the Drawings.

E. Fabrication Tolerances: Fabrication tolerances shall conform to AISC 303, unless otherwise noted.

3.4 FINISHES

A. Surface Preparation:
   1. Remove visible oil, grease, soil, drawing and cutting compounds, and other soluble contaminants from all steel surfaces in accordance with SSPC-SP1 "Solvent Cleaning."

DocuSign Envelope ID: 330DEBD6-9A9E-4F34-BDCC-1AC1BAA701E9

2. After fabrication, remove loose mill scale, rust, paint, and other detrimental foreign matter in accordance with SSPC-SP2 “Hand Tool Cleaning” for the following steel surfaces:
   a. Steel to receive spayed-on fireproofing.
   b. Steel to be embedded or encased in concrete.
   c. Steel to be hot-dip galvanized.
3. After fabrication, remove loose mill scale, rust, paint, and other detrimental foreign matter from steel surfaces to be primed in accordance with SSPC-SP3 “Power Tool Cleaning.”

B. Shop Prime Painting:
1. Shop prime structural steel, except as follows:
   a. Members or portions of members to be fireproofed
   b. Members or portions of members to be embedded in concrete or mortar, except for the initial 2-inches.
   c. Faying surfaces of connections using slip critical bolts.
   d. Surfaces to be field welded, including flange surfaces to receive metal decking.
   e. Surfaces to be hot-dip galvanized.
2. Immediately after surface preparation, apply structural steel primer paint in accordance with the manufacturer's instructions at a rate to provide a uniform dry film thickness of 3.0 mils. Use painting methods that will result in full coverage of joints, corners, edges and exposed surfaces.
   a. Apply two coats of primer to surfaces that are inaccessible after assembly or erection. Change color of second coat to distinguish it from the first.

3.5 ERECTION

A. General: Erect structural steel in accordance with AISC 303 and ANSI/AISC 360.
1. Conform to the additional requirements of ANSI/AISC 341 for members and connections in the SLRS.

B. Where erection requires fabrication on site, conform to the requirements of section 3.3 “Fabrication” of this Specification.

C. Machine Bolts: Install machine bolts snug tight, unless noted otherwise on the Drawings.

D. Structural steel shall be erected true and plumb. Temporary shoring and bracing shall be provided wherever necessary and shall be adequate for the loads to which the structure may be subjected, including wind forces, erection equipment and operation of same. Temporary shoring and bracing shall remain in place as long as required for safety and until the final framing construction is complete. Final connections shall not be made until the structure has been properly aligned.

E. Provide temporary flooring, planking and scaffolding as necessary for the erection of the structural steel and support of erection equipment. Temporary elements shall conform to applicable Federal, State and Local regulations.

F. Erection Tolerances: Erection tolerances shall conform to AISC 303, unless otherwise noted.

3.6 CORRECTION OF DEFECTIVE WORK

A. Correction of defective work shall be the responsibility of the Contractor.

B. Work not in compliance with the requirements of the Contract Documents shall be considered defective, unless otherwise directed in writing by the Owner’s Representative.

C. Corrected work shall conform to the requirements of the Contract Documents.

D. The Contractor shall prepare a submittal documenting the defective work and proposed corrections and submit to the Owner’s Representative for review. The submittal shall include a description of the defective work, the location of defective work, and shall be accompanied by supporting sketches, photographs, or both. Additionally, the submittal shall include similar documentation of the Contractor’s proposed corrections.

E. Correction of defective work shall not commence until the Owner’s Representative has reviewed and accepted the submittal.

F. Correction of defective work shall be inspected by the Owner’s Testing Agency.

DocuSign Envelope ID: 330DEBD6-9A9E-4F34-BDCC-1AC1BAA701E9

3.7 CLEAN-UP

A. Remove from the site all debris resulting from the work of this Section.

END OF SECTION

DocuSign Envelope ID: 330DEBD6-9A9E-4F34-BDCC-1AC1BAA701E9

SECTION 99-055000

METAL FABRICATIONS

PART 1 - GENERAL

1.1 SUMMARY

A. Section Includes:
   1. Rough hardware.
   2. Miscellaneous Metals

1.2 SUBMITTALS

A. Product Data: Submit product data for manufactured components indicating type, finish, size, accessories, and anchorage details.

B. Shop Drawings:
   1. Indicate profiles, dimensions, fabrication and installation details, size and type of fasteners, welds, accessory items, shop finish and method of anchorage.
   2. Stamp shop drawings with seal and signature of professional engineer responsible for design.

C. Submit following Informational Submittals: Certifications specified in Quality Assurance article.

1.3 QUALITY ASSURANCE

A. Certifications: Fabricator's statement indicating fabrications are designed, fabricated, and installed to comply with code and Contract Document loading.

1.4 DELIVERY, STORAGE AND HANDLING

A. Deliver, store, and handle products in accordance manufacturer’s instructions.

PART 2 - PRODUCTS

2.1 FERROUS METALS, GENERAL

A. Steel Plates, Shapes and Bars: ASTM A36.
   1. Steel: Maximize use of recycled steel with minimum of 30 percent.

B. Steel Tubing: Cold-formed, ASTM A500.

C. Structural Steel Sheet: Hot-rolled, ASTM A1011/A1011M, Class 1; of grade required for design loading.

D. Galvanized Structural Steel Sheet: ASTM A653, of grade required for design loading. Coating designation; G90.

E. Steel Pipe: ASTM A53; type and grade (if applicable) as selected by fabricator and as required for design loading; black finish unless otherwise indicated.

2.2 SURFACE PREPARATION AND APPLICATION

A. Steel surfaces to be primed must be dry and free of dirt, oils, rust, salt and other contaminants.

B. Blast-clean steel to "commercial grade" SSPC SP-6 for general use.

C. Apply primers in accordance with manufacturer's instructions.

2.3 UNIVERSAL PRIMER

A. Locations: Interior steel in conditioned space.

B. Manufacturer's standard, lead free primer, capable of providing sound foundation for field applied top coats despite prolonged exposure.

C. Standard: FS TT-P-645.

D. Maximum Allowable Dry Time: 4 hours to touch; 24 hours to re-coat.

DocuSign Envelope ID: 330DEBD6-9A9E-4F34-BDCC-1AC1BAA701E9

E. Compatible with finish paint system specified in 99-099000.

F. Acceptable Products:
   1. Series 115 Uni-Bond, Tnemec Company, Inc., Kansas City, MO.
   2. Carboguard 890 VOC, Carboline Company, St. Louis, MO.

2.4 ZINC-RICH PRIMER

A. Locations: Exterior or areas subject to unconditioned, high humidity.

B. Inorganic, zinc-rich, capable of providing sound foundation for field applied top coats despite prolonged exposure, cathodic protection and corrosion resistance. Similar to galvanizing.
   1. Pigment Content: Minimum 63% zinc in dry film by weight.
   2. Compatible with finish paint system specified in 99-099000.
   3. Acceptable Products:
      a. Tnemec 94H_2O Hydro-Zinc, Tnemec Co., Kansas City, MO.
      b. Carbo-Zinc 859 VOC, Carboline Company, St. Louis, MO.
      c. ZRC Cold Galvanizing Compound, ZRC Products Company, Quincy, MA.

2.5 FABRICATION, GENERAL

A. Field verify dimensions prior to shop fabrication.

B. Minimize joints and seams by using largest stock sizes practical.

C. Locate multiple joints at regular intervals and at least conspicuous locations.

D. Form flush, tight, hairline joints and seams. Continuously weld joints and seams to develop the full strength of the jointed members.

E. Miter exposed joints. Grind exposed welds, seams and joints to form a smooth, uniform surface.

F. Weld in accord with AWS D1.1 for materials being welded.

G. Ease exposed edges to a minimum, uniform radius of 1/32 inch.

H. Fit and shop assemble sections in largest sizes practical for site delivery.

I. Fabricate work to exclude rain and condensate or provide weep holes to divert water to the exterior.

J. Form break metal corners to the smallest radius possible without distressing the finish surface.

K. Cut, drill, punch, tap, reinforce and provide anchors to accommodate adjoining work and hardware.

L. Provide anchors, bolts, rough hardware, fasteners and accessories required to incorporate and secure fabrications and to make the units functionally operational.

M. Use countersunk, flat head screws and bolts at exposed joints requiring mechanical fasteners.

N. At exposed work, use materials which are smooth, free of surface blemishes, pitting, seam marks, roller marks, trade names and roughness.

2.6 ROUGH HARDWARE

A. Furnish bent or custom fabricated bolts, plates, anchors, hangers, dowels and miscellaneous steel and iron shapes required for framing, supporting, anchoring or securing fixtures, accessories, and furnishings.

B. Straight bolts and other stock rough hardware items are specified in Division 6 sections.

C. Fabricate items to sizes, shapes and dimensions required.

D. Furnish steel washers, except use malleable-iron washers for heads and nuts which bear on wood structural connections.

E. Finish: Same as item being supported or anchored.

2.7 ANGLE FRAMES AND EDGE ANGLES

A. Complete with anchors and bolts. For casting in concrete, space anchors 24 inches OC with 1-1/4 inches by 1/4 inch by 8 inches steel straps.

DocuSign Envelope ID: 330DEBD6-9A9E-4F34-BDCC-1AC1BAA701E9

B. Finish: Universal primer for interior.

PART 3 - EXECUTION

3.1 EXAMINATION

A. Examine conditions and proceed with work when substrates are ready.

B. Coordinate and furnish setting drawings, diagrams, templates, instructions, and directions for installation of anchorages, concrete inserts, sleeves, anchor bolts and miscellaneous items having integral anchors which are embedded in concrete or masonry construction.

3.2 INSTALLATION, GENERAL

A. Perform cutting, drilling and fitting required for installation of fabrications.

B. Set work accurately to established lines and levels.

C. Provide temporary bracing and anchors for items which are to be built into concrete, masonry or similar construction.

D. Fit exposed connections together to form tight hairline joints. Weld connections which are left as exposed joints.

E. Grind exposed joints smooth and touch-up shop paint.

F. Do not weld, cut or abrade galvanized surfaces of bolted or screwed connections.

G. Field Welding; comply with AWS Code D1.1.

H. Clean concrete and masonry bearing surfaces of any bond-reducing materials; roughen to improve bond to surfaces. Clean bottom surface of bearing plates.

I. Set loose leveling and bearing plates on wedges, or adjustable devices. After the bearing members have been positioned and plumbed, tighten the anchor bolts. Do not remove wedges or shims, but if protruding, cut flush with edge of bearing plate before packing with grout.

3.3 ADJUST AND CLEAN

A. Touch-Up Painting: Immediately after erection, clean field welds, bolted connections, and abraded areas and paint with same material used for shop painting. Apply by brush or spray to provide a minimum dry film thickness of 2.0 mils.

END OF SECTION

DocuSign Envelope ID: 330DEBD6-9A9E-4F34-BDCC-1AC1BAA701E9

SECTION 99-057000

DECORATIVE METAL

PART 1 - GENERAL

1.1 SUMMARY

A. Section Includes:
   1. Stainless Steel Welded Wire Mesh

1.2 SUBMITTALS

A. Product Data: Submit product data for manufactured components indicating type, finish, size, accessories, and anchorage details.

B. Shop Drawings:
   1. Indicate profiles, dimensions, fabrication and installation details, size and type of fasteners, welds, accessory items, shop finish and method of anchorage.
   2. Stamp shop drawings with seal and signature of professional engineer responsible for design.

C. Submit following Informational Submittals: Certifications specified in Quality Assurance article.

1.3 QUALITY ASSURANCE

A. Certifications: Fabricator's statement indicating fabrications are designed, fabricated, and installed to comply with code and Contract Document loading.

1.4 DELIVERY, STORAGE AND HANDLING

A. Deliver, store, and handle products in accordance manufacturer’s instructions.

PART 2 - PRODUCTS

2.1 MANUFACTURERS

A. Stainless Steel Wire Mesh
   1. Basis of Design: McNichols 2” Square Opening Wire Mesh 0.1880” or approved equal

2.2 ACCESSORIES

A. Stainless Steel Trim Edge as indicated in drawings.

2.3 FABRICATION, GENERAL

A. Field verify dimensions prior to shop fabrication.

B. Minimize joints and seams by using largest stock sizes practical.

C. Locate multiple joints at regular intervals and at least conspicuous locations.

D. Form flush, tight, hairline joints and seams. Continuously weld joints and seams to develop the full strength of the jointed members.

E. Miter exposed joints. Grind exposed welds, seams and joints to form a smooth, uniform surface.

F. Weld in accord with AWS D1.1 for materials being welded.

G. Ease exposed edges to a minimum, uniform radius of 1/32 inch.

H. Fit and shop assemble sections in largest sizes practical for site delivery.

I. Fabricate work to exclude rain and condensate or provide weep holes to divert water to the exterior.

J. Form break metal corners to the smallest radius possible without distressing the finish surface.

K. Cut, drill, punch, tap, reinforce and provide anchors to accommodate adjoining work and hardware.

DocuSign Envelope ID: 330DEBD6-9A9E-4F34-BDCC-1AC1BAA701E9

L. Provide anchors, bolts, rough hardware, fasteners and accessories required to incorporate and secure fabrications and to make the units functionally operational.

M. Use countersunk, flat head screws and bolts at exposed joints requiring mechanical fasteners.

N. At exposed work, use materials which are smooth, free of surface blemishes, pitting, seam marks, roller marks, trade names and roughness.

PART 3 - EXECUTION

3.1 EXAMINATION

A. Examine conditions and proceed with work when substrates are ready.

3.2 INSTALLATION, GENERAL

A. Perform cutting, drilling and fitting required for installation of fabrications.

B. Set work accurately to established lines and levels.

C. Fit exposed connections together to form tight hairline joints. Weld connections which are left as exposed joints.

D. Grind exposed joints smooth and touch-up.

E. Do not weld, cut or abrade frames and mesh which have been finished after fabrication and are to be field connected by mechanical means.

F. Field Welding; comply with AWS Code D1.1.

3.3 ADJUSTING AND CLEANING

A. Protect finishes of mesh from damage during construction by use of temporary protective coverings approved by manufacturer. Remove protective covering at project completion. Restore finishes damaged during installation and construction period.

END OF SECTION

DocuSign Envelope ID: 330DEBD6-9A9E-4F34-BDCC-1AC1BAA701E9

SECTION 99-057300

STAINLESS STEEL RAILINGS

PART 1 - GENERAL

1.1 SUMMARY

A. Section Includes:
   1. Stainless steel railings with toe plates at ramps for ADA Accessibility.
   2. Exterior Terrace rail with steel angle frame, stainless steel mesh infill, and stainless steel handrail to match existing.

1.2 DEFINITIONS

A. Guard: A building component or a system of building components located at or near the open sides of elevated walking surfaces that minimizes the possibility of a fall from the walking surface to a lower level.

B. Handrail: A horizontal or sloping rail intended for grasping by hand for guidance or support.

1.3 SYSTEM REQUIREMENTS

A. Design Requirements:
   1. Fabricator is responsible for designing units, including anchorage to concrete slab and necessary modifications to meet specified requirements and maintain visual design concepts.
   2. Drawings are diagrammatic and are intended to establish basic dimension of units, sight lines, and profiles of units.
   3. Provide concealed fastening wherever possible.

B. Structural Requirements: Provide assemblies which, when installed, comply with the following minimum requirements for structural performance:
   1. Handrails and Guards: Capable of withstanding following loads applied as indicated.
      a. Concentrated load of 200 pounds applied at any point along the top, in any direction, and have attachment devices and supporting structure to transfer this loading to appropriate structural elements of the building.
      b. Uniform load of 50 PLF applied in any direction at the top and to transfer this load through the supports to the structure.
      c. Concentrated and uniform loads above need not be applied simultaneously.
   2. Infill Area of Guardrail System: Intermediate rails (all those except the handrail), balusters, and panel fillers shall withstand horizontal load of 50 pounds on area equal to 1 square foot, including openings and space between rails. Above load need not be assumed to be acting concurrently with horizontal loads on railing system.

C. Performance Requirements:
   1. Test typical installation in accordance with ASTM E935 at start of erection.
   2. Apply test loads simultaneously when required by design criteria.

1.4 SUBMITTALS

A. Shop Drawings: Indicate locations and complete fabrication details, materials, finishes, and installation details.

B. Submit following Informational Submittals: Manufacturer's instructions.
   1. Test Report: Results of load test in accordance with ASTM E935 for each type of railing system or rail tested.
   2. Support reactions design data.
   3. Certifications specified in Quality Assurance article.

DocuSign Envelope ID: 330DEBD6-9A9E-4F34-BDCC-1AC1BAA701E9

1.5 QUALITY ASSURANCE

A. Fabricator Qualifications: Company specializing in fabricating work specified in this Section with minimum 5 years documented experience.

B. Welder Qualifications: AWS certified within past 12 months for each type of weld required.

C. Certifications:
   1. Submit certificates verifying AWS qualifications for each welder employed on Project.
   2. Submit fabricator's certification that products furnished for Project meet or exceed specified requirements.
   3. Engineering certifications.

1.6 DELIVERY, STORAGE AND HANDLING

A. Deliver, store, and handle products in accordance manufacturer’s instructions.

PART 2 - PRODUCTS

2.1 MATERIALS

A. Stainless Steel:
   1. Pipe: ASTM A312, Grade TP 316.
   2. Tubing: ASTM A554, Grade MT 304.
   3. Castings: ASTM A743, Grade CF-8 or CF-20.
   4. Shapes: ASTM A276, UNS Number S31600.

B. Stainless Steel Welded Wire Mesh Railing Insert Panels:
   1. Completely assembled insert units for attachment to handrail and guardrail systems and including all necessary mounting accessories, fittings and fastenings to match existing.
   2. Frames: 1-inch x 1/2-inch x 1/8-inch channel with 1-inch closure strip.
   3. Mesh: 0.080 inch welded into 2 by 2-inch square mesh, securely clinched to frames.
   4. Attachment clips: Match existing.
   5. Exterior wire mesh panel, fittings and accessories: Stainless steel, Type 316.

C. Steel: Plates, shapes and bars: ASTM A36.

D. Zinc-rich Primer for Ferrous Metal:
   1. Inorganic, zinc-rich, capable of providing sound foundation for field applied top coats despite prolonged exposure, cathodic protection and corrosion resistance. Similar to galvanizing.
   2. Pigment Content: Minimum 63% zinc in dry film by weight.
   3. Compatible with finish paint system specified in 99-099600.
   4. Acceptable Products:
      a. $94H_2O$ Hydro-Zinc, Tnemec Co., Kansas City, MO.
      b. Carbo-Zinc 859 VOC, Carboline Company, St. Louis, MO.

E. Final Painting for Ferrous Metal:
   1. Exterior: Refer to Section 99-099600 - High-Performance Coatings.

2.2 GROUT

A. Non-Shrink Grout:
   1. Pre-mixed compound consisting of non-metallic aggregate, cement, water reducing and plasticizing additives.
   2. Minimum strength at 28 days: 5000 psi.
   3. Comply with ASTM C1107.
   4. Acceptable Products:
      a. Crystex, L&M Construction Chemicals, Omaha, NE.
      b. Masterflow 713, Master Builders, Cleveland, OH.
      c. Euco Rock Anchor Bolt Grout, Euclid Chemical Co., Cleveland, OH.
      d. SikaGrout 212, Sika Corporation, Lyndhurst, NJ.
      e. Five Star Grout, Five Star Products, Fairfield, CT.

B. Fasteners: As recommended by manufacturer for conditions encountered.

DocuSign Envelope ID: 330DEBD6-9A9E-4F34-BDCC-1AC1BAA701E9

2.3 FABRICATION

A. General:
   1. Verify dimensions on site prior to fabrication.
   2. Fabricate to support design loads specified.
   3. Fit and shop assemble in largest practical sizes.
   4. Fabricate materials straight and true, without scratches, scars, creases, buckles, ripples, or chatter marks, free from surface blemishes.

B. Connections:
   1. Stainless Steel Custom Design: Fabricate for connection of members by welding; comply with AWS for recommended practices; grind exposed welds smooth and flush.
   2. Fabricate stainless steel toe plates from angles for bolted connections.
   3. Ornamental Steel Railings: Fabricate for interconnection of members by welding. Grind exposed welds smooth, flush, and contoured to adjacent surfaces.

C. Brackets, Flanges, Fittings, and Anchors:
   1. Provide brackets, flanges, miscellaneous fittings and anchors for interconnection of railing members as indicated on Drawings.

D. Joints: Mill to tight, hairline fit.

E. Ends: Capped.

F. Bends: Form by prefabricated elbow fittings and radius bends, except where configuration requires bending of railing members.

2.4 FINISHES

A. Stainless Steel: No. 4 brushed finish.

B. Polyurethane Coating for Ferrous Metal: Prepare for final finishing under Section 99-099600.

PART 3 - EXECUTION

3.1 EXAMINATION

A. Examine conditions and proceed with work when substrates are ready.

3.2 INSTALLATION

A. Install in accordance with manufacturer's recommendations.

B. Fit exposed connections to form tight, hairline joints.

C. Set work accurately in location, set posts and align to within 1/4 inch in 12 feet. Set rails horizontally or parallel to ramp to within 1/4 inch in 12 feet.

D. Do not weld, cut or abrade railings which have been finished after fabrication and are to be field connected by mechanical means.

E. Anchoring:
   1. Posts in Concrete:
      a. Anchor posts in concrete by means of core drilling holes.
      b. Fill annular space between posts and sleeves solid with non-shrink, non-metallic grout.
      c. Leave anchorage joint exposed; wipe off excess grout and leave flush with adjacent floor.
   2. Toe Plates: Bolt stainless steel angles to concrete with stainless steel expansion bolts.

3.3 ADJUSTING AND CLEANING

A. Protect finishes of railings from damage during construction by use of temporary protective coverings approved by railing manufacturer. Remove protective covering at project completion. Restore finishes damaged during installation and construction period.

B. Touch-Up Painting of Ferrous Metal:
   1. Clean field welds of flux.
   2. Power-tool clean abraded shop paint.

DocuSign Envelope ID: 330DEBD6-9A9E-4F34-BDCC-1AC1BAA701E9

3. Paint exposed areas with shop primer material.
4. Clean field welds and abraded areas of galvanized surfaces and apply galvanizing repair paint per ASTM A780.

END OF SECTION

DocuSign Envelope ID: 330DEBD6-9A9E-4F34-BDCC-1AC1BAA701E9

SECTION 99-057701

DECORATIVE METAL LINEAR GRILLES

PART 1 GENERAL

1.1 SUMMARY

A. Section Includes: Fixed linear grilles with straight frames for grille placed in gypsum board ceiling.

1.2 SUBMITTALS

A. Product Data: For each type of product indicated, include the following:
   1. Data Sheet: Indicate materials of construction, finish, and mounting details; and performance data including throw and drop, static-pressure drop, and noise ratings.
   2. Grille Schedule: Indicate drawing designation, room location, quantity, model number, size, and accessories furnished.

PART 2 PRODUCTS

2.1 REGISTERS AND GRILLES

A. Fixed Blade Grille:
   1. Manufacturers: Subject to compliance with requirements, available manufacturers offering products that may be incorporated into the Work include, but are not limited to, the following:
      a. Basis of Design: AG10 Bar Grille, Architectural Grille
   2. Material: 1/8 inch thick extruded aluminum blades, 3/4 inch deep on 3/8 inch centers (1/4 inch open space between blades), 1/2 inch deep cross-bars..
   3. Frame: 1/8 inch thick, straight bar (Frameless) Shape, reinforced corners (AG-10G Frame).
   4. Finish: Clear anodized aluminum.
   5. Mounting: Ceiling.
   6. Blade Arrangement: Parallel to long dimension.
   7. Accessories: Connections into gypsum board ceiling as shown on Architectural Drawings.

PART 3 EXECUTION

3.1 EXAMINATION

A. Examine areas where grilles are to be installed for compliance with requirements for installation tolerances and other conditions affecting performance of equipment.

B. Proceed with installation only after unsatisfactory conditions have been corrected.

3.2 INSTALLATION

A. Install grilles level and plumb in accordance with manufacturer's instructions.

END OF SECTION

DocuSign Envelope ID: 330DEBD6-9A9E-4F34-BDCC-1AC1BAA701E9

SECTION 99-051205

STRUCTURAL STEEL FOR BUILDING – SEISMIC RETROFIT

PART 1 - GENERAL

1.1 SUMMARY

A. This work consists of fabricating, assembling, and erecting structural steel and replacing rivets with high-strength bolts.

B. The work of this section will disturb the existing paint system contains lead paint comply with section 02082 Lead-Related Construction Work

1.2 DEFINITIONS

demand critical welds: Those welds, the failure of which would result in significant degradation of the strength and stiffness of the Seismic-Load-Resisting System and which are indicated as "Demand Critical" or "Seismic Critical" shown.

RCSC: The Research Council on Structural Connections.

seismic-load-resisting system (SLRS): Elements of structural-steel frame designated as SLRS or along grid lines designated as SLRS shown, including columns, beams, and braces and their connections.

structural steel: Elements of the structural steel frame essential to support the design loads, including:

1. High strength bolts
2. Rods
3. Bars
4. Braces (angles and WT shape)
5. Stiffener plates
6. Anchor bolts

1.3 SUBMITTALS

A. Product Data: Submit product data for items to be incorporated into the work, including structural steel, high strength fastener assemblies, and alternative connectors.

B. Shop Drawings:

1. Submit shop drawings that include the following:
   a. A comprehensive list of all structural steel elements to be used as described under AISC 303, section 2.1, "Definition of Structural Steel."
   b. Sequence of assembly and erection, rivet removal and bolt replacement sequence, welding sequence and procedures, and welding nondestructive testing (NDT) sequence and procedures.
   c. Identification of welds by standard AWS symbols, and show size, length, and type of each weld.
   d. Location and details of any temporary supports that are to be used.
   e. Type, size, and length of bolts. Identify high-strength bolted connections.
   f. Identification of members and connections of the seismic-load-resisting system.
   g. Any changes proposed in the work,–and details for connections not dimensioned on the plans. If changes are proposed or connections are designed, submit design calculations stamped and signed by an engineer who is registered as a Civil or Structural Engineer in the State of California. The expiration date of the registration must be shown.

C. Welding Procedure Specifications (WPSs) and Procedure Qualification Records (PQRs): Submit WPSs and PQRs under AWS D1.1/D1.1M for each welded joint whether prequalified or qualified by testing, including the following:

1. Power source (constant current or constant voltage).
2. Electrode manufacturer and trade name, for demand critical welds.

DocuSign Envelope ID: 330DEBD6-9A9E-4F34-BDCC-1AC1BAA701E9

D. Qualification Data: Submit fabricator and welder qualifications.

E. Certificates of Compliance: Submit a certificate of compliance for structural steel products. Include mill test certificates for each heat number of steel used in the work.

F. Final Drawings:
   1. At the completion of each structural steel building, submit one set of reduced prints on 60-pound (minimum) bond paper, 11 inches x 17 inches, of the corrected original tracings of all authorized shop drawings for each building. Include an index prepared specifically for the drawings for each building containing sheet numbers and titles on the first reduced print in the set for each building. Arrange reduced prints for each building in the order of drawing numbers shown in the index.
   2. The edge of the corrected original tracing image must be clearly visible and visually parallel with the edges of the page. Provide a clear, legible symbol on the upper left side of each page to show the amount of reduction, and provide a horizontal and vertical scale on each reduced print to facilitate enlargement to original scale.

1.4 QUALITY CONTROL AND ASSURANCE

A. Fabricate, assemble, and erect structural steel under AISC 303, 325, 341, and 360.

B. Welding: Weld under AWS D1.1/D1.1M and AWS D1.8/D1.8M.

C. Welding Qualifications:
   1. Qualify procedures and personnel under AWS D1.1/D1.1M.
   2. Welders and welding operators performing work on bottom-flange,must pass the supplemental welder qualification testing, under AWS D1.8/D1.8M. FCAW-S and FCAW-G must be considered separate processes for welding personnel qualification.

1.5 DELIVERY, STORAGE, AND HANDLING

A. Load, transport, unload, and store structural materials so they are kept clean and undamaged. Store materials to permit access for inspection and identification.

B. Keep steel members off ground and spaced by using pallets, dunnage, or other supports and spacers. Provide covers for protection of materials.

PART2 - PRODUCT

2.1 GENERAL

A. Steel Bars, and Shapes (other than W-shapes): For each yield stress shown, comply with the following:
   1. ASTM A 992/A 992M, Grade 50, when minimum yield stress is 50 ksi.

B. Plates and Angles: For each yield stress shown, comply with the following:
   1. ASTM A 572/A 572M, Grade 50, when minimum yield stress is 50 ksi.

C. W-shapes: Comply with ASTM A 992/A 992M.

2.2 BOLTS, CONNECTORS, AND ANCHORS

A. Anchor Bolts and Anchor Rods, Nuts and Washers:
   1. Headed and Unheaded Anchor Bolts and Anchor Rods: Comply with ASTM– A193. Use Grade B7 unless a higher grade is shown.
   2. Nuts: Comply with ASTM A 194 Grade 2H.
   3. Washers:
      a. Washers must comply with ASTM F 436.
   4. Exposed anchor bolts and anchor rods, nuts and washers must be hot-dipped galvanized.

B. High Strength (HS) Fastener Assemblies:
   1. HS Bolts: Comply with ASTM A 325and the Research Council on Structural Connections with threads excluded from the shear plane unless otherwise shown.
   2. Nuts: Comply with ASTM A 563.
   3. Washers: Comply with ASTM F 436, Type 1.

DocuSign Envelope ID: 330DEBD6-9A9E-4F34-BDCC-1AC1BAA701E9

4. Direct Tension Indicators: Comply with ASTM F 959.
5. Tension Control Bolts: Comply with ASTM F 1852.

2.3 SHOP FABRICATION

A. Shop Fabrication and Assembly:
1. Cuts must not deviate more than 1/16 inch from the intended line. Remove roughness, notches, and gouges.
2. At points of loading, bearing stiffeners must be square with the web. At least 75 percent of the stiffener must be in contact with the flanges.
3. Finished members must be true to line and be free from twists, kinks, warps, dents, and open joints. Finished members must have square corners and smooth bends
4. Exposed edges and ends of metal must be dressed smooth, with no sharp edges, and with corners slightly rounded.
5. Mark and match-mark materials for field assembly.
6. Complete structural steel assemblies, including welding of units, before shop-priming operations.

B. Connections:
1. Clean abutting surfaces at connections.
2. Do not cut at the job site, except as shown on the authorized shop drawings or authorized by the Engineer.
3. Cut, drill, or punch holes perpendicular to steel surfaces. Finished holes for bolts must be cylindrical. Sub-punch and sub-drill holes ¼ inch smaller in diameter than the diameter specified for the finished hole.

C. Bolted Connections:
1. Fabricate steel to steel bolted connections with HS fastener assemblies when shown.
2. HS Fastener Assemblies:
   a. Assemble and install HS fastener assemblies under RCSC's "Specification for Structural Joints Using ASTM A 325Bolts."
   b. Joint Type:
      i. Snug tightened when no joint type is shown.
      ii. Pretensioned or slip critical when joint type is shown as such.
   c. Galvanize HS fastener assemblies, or equivalent fasteners, by mechanically deposited coating process.
   d. The bolt head type and head location must be consistent within a joint.
   e. Install nuts on side of member least exposed to view or as shown.

D. Holes for Other Work: Cut, drill, or punch holes perpendicular to metal surfaces. Do not flame cut holes or enlarged holes by burning. Drill holes in bearing plates.

2.4 SHOP FINISHES

A. Shop prime structural steel members.

B. Clean and coat steel surfaces of shop primed members under section 99-099005.

C. HS Bolted Connections: Contact surfaces of HS bolted connections and ungalvanized anchorage assemblies must be coated before assembly. The total thickness of primer on each faying surface of slip-critical joints must be between 1 mil and the maximum allowable dry film thickness determined under the RCSC's "Specification for Structural Joints Using ASTM A 325 Bolts."

PART 3 - EXECUTION

3.1 ERECTION

A. Set structural steel accurately in locations and to elevations indicated.

B. Field Splices:
1. Field splices must be made only at the locations shown on authorized shop drawings or authorized by the Engineer.

DocuSign Envelope ID: 330DEBD6-9A9E-4F34-BDCC-1AC1BAA701E9

2. Accurately assemble parts in their final position as shown and in true alignment with related and adjoining work before final fastening.
3. Support parts to provide a vibration free, rigid, and secure installation.

3.2 FIELD CONNECTIONS

A. Assembly and installation of bolted connections must comply with "Bolted Connections" under "Shop Fabrication."

B. Column plating joints with high strength bolts must be slip critical type, class A and must comply with AISC requirements for slip critical type, class A connections.

C. Rivet replacement with high strength bolts must be pre-tensioned type and must comply with AISC for pre-tensioned type connections.

D. Clean existing steel surface in compliance with section 99-099005 before any new bolted connections are made.

3.3 RIVET REMOVAL AND REPLACEMENT:

A. Do not remove any rivets until the sequence of rivet removal and replacement is approved.

B. Only one rivet per connection may be removed and replaced with a high strength bolt before removing subsequent rivets in the connection.

D. Only one number of connections may have rivet removal and replacement operations performed concurrently per column line.

E. Ream rivet holes a maximum of 1/16-inch diameter greater than the nominal diameter of the new high strength bolt being installed. Burning is not allowed.

F. The inside surface of the reamed holes must be cleaned and painted in compliance with section 99-099005.

3.4 FIELD QUALITY CONTROL

A. Welded Connections: Test and inspect welded connections under AWS D1.1/D1.1M and the following:
   1. Inspection:
      a. Comply with AISC 341, section J6.2, except for CJP groove welds not receiving ultrasonic testing, perform magnetic particle testing on 100% of each root weld pass and each final weld pass of these welds.
      b. Perform magnetic particle testing on 25% of each PJP groove weld. The Engineer will select the locations for testing. The cover pass must be ground smooth before testing.
   2. Acceptance Criteria:
      a. Ultrasonic Testing: Comply with AWS D1.1/D1.1M, Table 6.2 for statically loaded nontubular connections.
      b. Magnetic Particle Testing: Comply with AWS D1.1/D1.1M, Clause 6, Part C.
   3. Repairs:
      a. If repairs are required, perform NDT on the repaired portion and re-inspect the weld by performing additional NDT on the entire length of the unrepaired portion of the weld under "Field Quality Control."
      b. NDT of repaired work must be performed at your expense.

3.5 FIELD FINISHES

A. Touch-up Painting: After erection, clean field welds, bolted connections, and abraded areas of shop paint under SSPC-SP 2 or SSPC-SP 3. Apply one coat of the same coating as applied for shop painting to the cleaned areas.

B. After touch-up painting, coat all new surfaces with a second prime coat, and finish coats when specified, to comply with section 99-099005.

END OF SECTION

DocuSign Envelope ID: 330DEBD6-9A9E-4F34-BDCC-1AC1BAA701E9

SECTION 99-061000

ROUGH CARPENTRY

PART 1 - GENERAL

1.1 SUMMARY

A. Section Includes: Wood blocking within building and on roof; panel equipment boards.

1.2 DEFINITIONS

A. Blocking: Wood used for plates, furring, shimming, stripping, sleepers, grounds, curbing, cants, bracing, nailers, and filling in between framing members.

1.3 SUBMITTALS

A. Product Data: Provide product data on wood treatment materials; include historical performance information.

1.4 QUALITY ASSURANCE

A. Grade Marks:
   1. Identify lumber and plywood by official grade mark.
   2. Lumber: Include symbol of grading agency, mill name, grade, species, grading rules, and condition of seasoning at time of manufacturer.
   3. Plywood: Include type, class identification index, and agency mark.
   4. Pressure treatment: Include quality mark of grading agency which maintains continued supervision, testing, inspection, and re-examination service over product quality as described in AWPA standards.
   5. Fire-retardant treated wood: Imprint each piece with mark attesting to FR-S rating.

B. Certifications: Submit manufacturer's certification that products furnished for Project meet or exceed specified requirements.

1.5 DELIVERY, STORAGE AND HANDLING

A. Deliver, store, and handle products in accordance manufacturer’s instructions.

B. Storage and Protection:
   1. Store products above ground, on platforms or skids, and covered with waterproof coverings.
   2. Store products with ventilation, drainage, and protection against damp or wet locations.
   3. Support products to prevent warping and distortion.

C. Fire-Retardant Treated Wood:
   1. Keep materials dry during delivery and storage.
   2. Protect against exposure to weather.

PART 2 - PRODUCTS

2.1 SOLID SAWN LUMBER

A. Lumber Grading Agency: Certified by American Lumber Standards Committee or NLGA.

B. Grading rules of NLGA, SPIB, WCLIB, and WWPA apply to respective materials furnished.

C. Comply with PS-20.

D. Dimensions: Lumber dimensions are nominal; actual dimensions conform to PS-20 and applicable rules writing agencies.

E. Maximum moisture content at time of dressing: 19 percent.

F. Surfacing: Surface four sides (S4S), unless noted otherwise.

G. Finger-jointed lumber is not permitted.

H. Size Classification: 2 inches to 4 inches thick, 2 inches to 4 inches wide.

DocuSign Envelope ID: 330DEBD6-9A9E-4F34-BDCC-1AC1BAA701E9

I. General Non-Structural Framing: Stud grade, any species.

J. Blocking: Utility grade, any species.

2.2 PLYWOOD

A. General: Provide composite wood without added urea-formaldehyde resins complying with Cal-GREEN Table 5.504.4.5 - Formaldehyde Limits requirements.

B. Grading Rules:
   1. PS-1 or APA PRP-108.
   2. Plywood Grading Agency: Certified by APA.

C. Uses, Grades, and Ratings:
   1. Equipment Panel Boards:
      a. Rated Sheathing.
      b. Exposure 1.
      c. Grade: A-C, void free.
      d. Thickness: 23/32 inches minimum.

2.3 FASTENERS

A. Provide fasteners in sizes, spacings, and locations to suit applications.

B. Provide hot-dipped galvanized or stainless steel fasteners for use with preservative treated and fire-retardant treated wood and for exterior use or where built into exterior walls. Select fasteners for the type, grade and class required.

C. Anchors:
   1. Toggle bolt type for anchorage to hollow masonry.
   2. Expansion shield and lag bolt type for anchorage to solid masonry or concrete.
   3. Bolts or ballistic fasteners for anchorage to steel.
   4. Bolts and Nuts: Regular hexagon head type, ASTM A307, Grade A.
   5. Eyebolts: ASTM A489.
   6. Machine Screws: ASME B18.6.3.
   7. Lag Bolts: ASME B18.2.1.
   8. Wood Screws: Flat head, ASME B18.6.1.
   9. Plain Washers: Round, ASME B18.22.1.
   10. Lock Washers: Helical, spring type, ASME B18.21.1.
   11. Masonry Anchorage Devices: Expansion shields.
   12. Toggle Bolts: Tumble-wing type, class and style as required.

2.4 ACCESSORIES

A. Adhesive:
   1. APA AFG-01.
   2. Waterproof, air cured type, cartridge dispensed.
   3. VOC Limits: 30 g/l maximum for wood substrates.

B. Adhesives and sealants shall meet or exceed the VOC and chemical component limits of Cal-GREEN Table 5.504.4.1 Adhesive VOC Limit, and Cal-GREEN Table 5.504.4.2 Sealant VOC Limit requirements.

2.5 WOOD TREATMENTS

A. Kiln dry pressure-treated products after treatment to following maximum moisture contents:
   1. Lumber: 19-percent.
   2. Plywood: 15-percent.

B. Preservative Pressure Treatment:
   1. Solid sawn lumber, decking, and timber: Comply with AWPA C2.
   2. Plywood: Comply with AWPA C9.
   3. Use waterborne preservatives.
   4. Do not incise surfaces of lumber at exposed to view locations.

DocuSign Envelope ID: 330DEBD6-9A9E-4F34-BDCC-1AC1BAA701E9

5. Treat following Items for Above Ground Use:
   a. Grounds in contact with concrete.
   b. Floor screeds.
   c. Sills, plates, soles, and furring which rest on concrete exterior walls and masonry exterior walls, and are less than 8 inches from exposed earth.
   d. Sills, plates, soles, furring, blocking, and sleepers on concrete slabs and masonry slabs which are in direct contact with the earth.
6. Acceptable Above Grade Products and Manufacturers:
   a. ACQ Preserve, Chicago Flameproof, Montgomery, IL 60538.
   b. Wolmanized L^3 Outdoor Wood, Arch Chemicals, Inc., Norwalk, CT 06856
   c. Dura-Guard®, Hoover Treated Wood Products, Inc., Thomson, GA 30824.

C. Fire Retardant Pressure Treatment:
1. Description:
   a. AWPA C20 for interior lumber.
   b. AWPA C27 for interior plywood.
   c. Hygroscopicity: Provide fire retardant treated wood and plywood rated as Interior Type A High Temperature (HT) in accordance with Sections 2.2.2.1 of AWPA C20/C27 when tested at 92% relative humidity.
   d. Chemically treat and pressure impregnate wood products.
   e. Capable of providing a maximum flame spread/smoke development rating of 25/25 (FR-S Rating).
   f. Not required to have brush treatment of cuts made in the field.
   g. Equilibrium moisture content of not more than 28 percent when tested in accordance with ASTM D3201 procedures at 92 percent relative humidity.
   h. Not detrimental to structural properties of plywood when exposed to elevated temperatures and high humidity when tested in accordance with ASTM D5516.
   i. Not capable of bleeding through or adversely affecting type of finish indicated.
   j. Not capable of corroding metals when tested in accordance with MIL-L-19140E.
2. Acceptable Products and Manufacturers, Interior:
   a. D-Blaze, Chemical Specialties, Inc., Charlotte, NC.
   b. Dricon FRT, Arch Wood Protection, Smyrna, GA.
   c. Pyroguard, Hoover Treated Wood Products, Thomson, GA.
3. Treated following Wood Items with Interior Type A Treatment:
   a. Blocking above ceilings.
   b. Blocking within return air plenums.
   c. Blocking within walls.
   d. Equipment panelboards.

PART 3 - EXECUTION

3.1 EXAMINATION

A. Examine conditions and proceed with work when substrates are ready.

B. Site Verification of Conditions:
1. Verify end supports are ready to receive framing.
2. Before installation, check members for damage, and proper dimensions.

3.2 PREPARATION

A. Wood Treatment Applied to Cut Surfaces at Site:
1. Comply with AWPA M4.
2. Apply preservative treatment in accordance with manufacturer's instructions to:
   a. Preservative pressure treated wood site-sawn ends.
   b. Holes cut through preservative pressure treated wood.
3. Allow preservative to cure prior to erecting members.

DocuSign Envelope ID: 330DEBD6-9A9E-4F34-BDCC-1AC1BAA701E9

3.3 CONSTRUCTION

A. General:
1. Construct plumb, level, true to line, square, and free from warp or twist while maintaining dimensional tolerances and alignment with surrounding construction.
2. Comply with AFPA NDS for attaching to substrates by anchoring and fastening to draw and securely hold members rigidly in place.
3. Install fasteners at spacings required by more stringent requirements of AFPA NDS or applicable building code.
4. Comply with APA E30 requirements for plywood.
5. Place horizontal and sloped members with crown edge up.
6. Place vertical members with crown edge facing in same direction.
7. Discard Material:
   a. With defects which might impair quality of work.
   b. Which are too small to fabricate work with minimum joints or optimum joint arrangement.
8. Scribe, cope, and construct members accurately cut and fitted.
9. Make tight connections between members to develop full member strength.
10. Locate members as indicated. Do not change size, spacing, or spans without Architect's specific approval. Take care to place species and grades of members where indicated.
11. Do not splice framing members between support points.
12. Cut, notch, or bore members for passage of pipes and conduits in accordance with AFPA WCD. Reinforce members by use of formed sheet metal accessories.
13. Fasteners:
    a. Use washers under bolt heads and nuts.
    b. Select fasteners of size that will not penetrate members where opposite side will be exposed to view or will receive finish materials.
    c. Install fasteners without splitting wood; predrill as necessary.
14. Shimming:
    a. Concrete and masonry bearing: Use steel or slate shims.
    b. Metal and wood bearing: Do not use shims.
15. Fire Retardant Treated Wood:
    a. Do not rip cut.
    b. Do not mill.
    c. Only end cuts and bored holes are permitted.

B. Wood Blocking:
1. Construct using maximum practical lengths.
2. Provide and locate continuous blocking to facilitate installation and attachment of wall mounted equipment, cabinets, millwork, finishing materials, fixtures, specialty items, and trim.
3. Cut and form to shapes for true line and level of work to be attached.
4. Coordinate location with other work involved.
5. Secure to masonry with metal plugs, toggle bolts, or expansion bolts set in masonry.
6. Attach to substrates to support applied loading.
7. Countersink bolts and nuts flush with wood surfaces.
8. Size as necessary unless specific size is indicated.

C. Plywood Sheathing:
1. General:
   a. Install panels with joints between panels staggered over center of supports.
   b. Install over two or more supports.
   c. Install with end joints staggered.
   d. Install with panel joints not more than 1/8 inch wide.
2. Plywood Backing and Mounting Boards:
   a. Install for equipment where indicated.
   b. Oversize panel by 12 inches beyond equipment perimeter.

DocuSign Envelope ID: 330DEBD6-9A9E-4F34-BDCC-1AC1BAA701E9

3.4 TOLERANCES

A. Lumber Framing Members: 1/4 inch maximum from true position.

3.5 PROTECTION

A. Protect finished work.

B. Protect products from moisture absorption and subsequent warping or deterioration until subsequent construction can proceed.

END OF SECTION

DocuSign Envelope ID: 330DEBD6-9A9E-4F34-BDCC-1AC1BAA701E9

SECTION 99-062000

FINISHED CARPENTRY

PART 1 - GENERAL

1.1 SUMMARY

A. Section Includes: Painted MDF wall base.

B. Related Sections:
   1. Section 99-061000 - Rough Carpentry: Blocking, bracing and back-up framing.
   2. Section 99-099000 - Painting and Coating: Field finishing.

1.2 DEFINITIONS

A. Comply with applicable provisions of *Architectural Woodwork Standards*, 1st Edition, October 2009, as adopted and published by Architectural Woodwork Institute and the Woodwork Institute.

1.3 SUBMITTALS

A. Product Data: Provide technical data on wood treatment materials, application instructions, and historical performance information.

B. Shop Drawings:
   1. Indicate profiles, sections, sizes, thicknesses, quantities, markings, materials, wood species, finishes, accessories, and locations of each item.
   2. Include assembly and installation drawings to show methods of wood blocking, fastening, bracing, jointing, and connecting to work of other trades.
   3. Scale: 3/4 inch = 1 foot for full sections, and 3 inches = 1 foot for details.

1.4 QUALITY ASSURANCE

A. Fabrication and Installation Standards: Fabricate and install in accordance with Architectural Woodwork Standards Edition 1, as listed below.
   1. Standing and running trim: AWS Section 6.
   2. Installation: AWS Appendix B – 12 Installation.

1.5 DELIVERY, STORAGE AND HANDLING

A. Deliver, store, handle, and protect products in accordance with manufacturer's instructions and Section 2, of the AWS Manual, 1st Edition, Care and Storage.

B. Protect materials from damage, soiling, and deterioration.

C. Do not deliver finish carpentry materials until job site conditions and operations which could damage, soil or deteriorate work are complete.

D. Store products and materials in ventilated, interior locations under constant minimum temperature of 60 degrees F and relative humidity not to exceed 55 percent.

1.6 ENVIRONMENTAL REQUIREMENTS

A. Install interior finish carpentry products only when temperature and humidity conditions have been stabilized and will be maintained.

B. Maintain temperature and moisture conditions as recommended by woodwork fabricator from date of installation through remainder of construction period.

PART 2 - PRODUCTS

2.1 MATERIALS

A. General:
   1. Provide materials that comply with requirements of AWS woodworking standard for each type woodwork and quality grade indicated.

DocuSign Envelope ID: 330DEBD6-9A9E-4F34-BDCC-1AC1BAA701E9

2. Products surfaced four sides, unless noted otherwise.
3. Finish level: Custom.

B. Medium Density Fiberboard: ANSI A208.2, Classification M-3.
1. Base:
a. Formaldehyde free material.
b. Size: As indicated on Drawings.
c. Finish: Field Painted.
2. General: Provide composite wood without added urea-formaldehyde resins complying with Cal-GREEN Table 5.504.4.5 - Formaldehyde Limits requirements.

2.2 ACCESSORIES

A. Wall Adhesive: Solvent release cartridge type, compatible with substrate, capable of achieving durable bond.
1. Adhesives and sealants shall meet or exceed the VOC and chemical component limits of Cal-GREEN Table 5.504.4.1 Adhesive VOC Limit, and Cal-GREEN Table 5.504.4.2 Sealant VOC Limit requirements.

B. Bolts, Nuts, Washers, Lags, Pins, Nails, and Screws: Size and type to suit application.

2.3 FINISH

A. Refer to Section 99-099000 and finish schedule.

PART 3 - EXECUTION

3.1 EXAMINATION

A. Examine conditions and proceed with work when substrates are ready.

B. Verify that field measurements are as shown on shop drawings.

C. Verify that mechanical, electrical, and other items affecting work of this Section are in place and ready to receive the work.

D. Verify blocking, bracing, and back-up framing have been installed in accordance with Section 99-061000 or 99-092900.

3.2 PREPARATION

A. Prime paint or seal concealed surfaces and items or assemblies which will be in contact with cementitious materials or surfaces.

B. Make field cuts with extreme care to avoid splintering.

3.3 INSTALLATION

A. General: Install work in accordance with manufacturer's instructions and approved shop drawings.

B. Install work in accordance with specified AWS quality standards.

C. Tolerances:
1. Set and secure materials and components, rigid, plumb, and square.
2. Maximum offset from true alignment with abutting materials: 1/32 inch unless otherwise specified or required by AWS grade.
3. Maximum Variation from True Position: 1/16 inch unless otherwise specified or required by AWS quality grade.

D. Shim as required using concealed shims.

E. Cut to fit to exact size. Where woodwork abuts other finished work, scribe and cut for accurate fit. Where necessary to fit at site, provide ample allowance for cutting and fitting.

F. Drill pilot holes at corners before making cutouts.

G. Distribute defects in accordance with AWS quality grade.

DocuSign Envelope ID: 330DEBD6-9A9E-4F34-BDCC-1AC1BAA701E9

H. Install trim and molding in unjointed lengths for openings and for runs less than maximum length of lumber available. For longer runs, use only one piece less than maximum length available in straight run.

I. Stagger joints in adjacent members.

J. Cope moldings at returns and miter at corners.

K. Attach wall base securely in place with uniform joints providing for thermal, moisture, and building movements; blind nail where possible.

L. Use finishing screws where exposed.

M. Sanding/Filling:
   1. Sand work smooth and set exposed nails and screws.
   2. Apply wood filler in exposed nail and screw indentations and leave ready to receive finishes.
   3. On items to receive transparent finishes, use wood filler to matches surrounding surfaces and required for finishes.

N. Secure woodwork to anchors, built-in blocking, or directly attach to substrates.

END OF SECTION

DocuSign Envelope ID: 330DEBD6-9A9E-4F34-BDCC-1AC1BAA701E9

SECTION 99-070152

ROOF MODIFICATIONS

PART 1 - GENERAL

1.1 SUMMARY

A. Section Includes: Roof modifications for new penetrations.

1.2 REFERENCES

A. Reference Standards: In addition to requirements shown or specified, comply with applicable provisions of following for design, materials, fabrication, and installation of component parts:
   1. NRCA Roofing and Waterproofing Manual, National Roofing Contractors Association.

1.3 DEFINITIONS

A. Building Expansion Joint: A gap or discontinuation of materials from one building area to another, allowing for movement caused by thermal variations and other conditions, extending through structural framing, decking, substrates, and roofing and flashing systems and components.

B. Roof Expansion Joint: A non-structural gap or discontinuation of materials extending through decking and roofing and flashing systems and components occurring at conditions identified by NRCA Roofing and Waterproofing Manual.

1.4 SYSTEM DESCRIPTION

A. Systems Criteria: Provide products required to match existing and to be fully compatible with each other and with existing materials and substrates, or provide separation materials as required to eliminate contact between incompatible materials.
   1. Provide new roof membrane, insulation, flashings, and metal coounterflashings to accommodate removal of existing equipment and new roof penetrations.

B. Performance Requirements: Prevent water infiltration through roof membrane penetrations or modifications resulting from work described in Contract Documents.

1.5 SUBMITTALS

A. General: Submit in accordance with Part 7, General Conditions, GC-43, "Submittal of Shop Drawings, Product Data and Samples," of Special Provisions.

B. Product Data: Submit for each product.
   1. Include list of materials and data sheets describing physical characteristics and performance criteria for materials proposed for use as well as applicable standards met by each product.
   2. Include sample of warranty customized for this project.

C. Shop Drawings: Submit details for this specific project indicating construction at penetrations, terminations, flashings, drains, and tie-in to existing roof.

D. Informational Submittals: Submit following packaged separately from other submittals:
   1. Certifications specified in Quality Assurance article.
   2. Qualification Data: Applicator's qualification data.
   3. Manufacturer's Instructions: Provide for each product.
   4. Manufacturer’s field reports.

E. Closeout Submittals: Submit under provisions of Part 6, Special Conditions, SC-22, "Project Close-Out Requirements – Record Drawings” of Special Provisions

1.6 QUALITY ASSURANCE

A. Applicator Qualifications:
   1. Minimum of five years documented experience in roofing repairs of existing roof type.
   2. Include list of completed projects having similar scope of work identified by name, location, date, reference name, and phone number.

DocuSign Envelope ID: 330DEBD6-9A9E-4F34-BDCC-1AC1BAA701E9

3. Foreman of Field Crew: Minimum five years experience in roofing repairs of this type of roof.

B. Certifications: Manufacturer's certification on manufacturer's letterhead:
1. Certify roof penetration, transition, and repair details; and system specifications are appropriate and satisfactory for this particular project.
2. Certify materials ordered and supplied are compatible with existing roofing system.

1.7 PRE-INSTALLATION CONFERENCE

A. Minimum Agenda:
1. Review Project Specifications and Drawings.
2. Establish installation schedules and sequence.
3. Review requirements and conditions which could interfere with successful performance of Work.
4. Coordinate work with in-place and subsequent construction.
5. Review weather and working conditions.
6. Review installation procedures, including:
   a. Substrate requirements.
   b. Insulation installation.
   c. Membrane installation.
   d. Surfacing requirements, including sequencing, and walkway protection.
   e. Roof seals, flashings, and connections to existing membrane.
   f. Inspection, testing, and quality control procedures.
   g. Warranty requirements, Owner expectations and exclusions.

B. Conduct tour of roof deck and review substrate surfaces to receive roof modifications. Report on substrate acceptability, possible problem areas, and recommended remedies.

1.8 PROJECT CONDITIONS

A. Environmental Requirements: Do not apply roofing membrane during inclement weather.
1. Proceed with roofing work only when existing and forecasted weather conditions permit work to be performed in accordance with manufacturer's recommendations.
2. Do not apply membrane when air or substrate temperature is below 40º F.

1.9 WARRANTY

A. Special Warranty: Warranty signed by installer stating that for two year period, repairs and maintenance shall be made to maintain roofing and flashings in watertight condition.

PART 2 - PRODUCTS

2.1 ROOF MATERIALS

A. Match existing for membrane, insulation, cants, nailers, overlay cover boards, flashing, and metal counterflashing.

PART 3 - EXECUTION

3.1 EXAMINATION

A. Examine conditions and proceed with work when substrates are ready.
1. Verify roof openings and penetrating elements through roof are anchored, and cant strips, wood blocking, nailing strips, and reglets are in place. Verify infill deck is properly supported and secured.
2. Do not apply roofing materials to damp, dirty, dusty or other surface conditions which are unacceptable to manufacturer or applicator.

3.2 PREPARATION

A. Protection: Take precautions to prevent odors from roofing operations from entering adjacent inhabited enclosed spaces.

DocuSign Envelope ID: 330DEBD6-9A9E-4F34-BDCC-1AC1BAA701E9

B. General: Protect existing roof membrane and construction from damage during construction with appropriate walkways.
   1. Remove existing roofing as necessary to create penetrations and god repair tie-ins.. Do not overload roof structure. Do not damage existing membrane to remain.
   2. Strip back existing roofing as necessary to perform modifications. Remove existing insulation exposed by membrane removal.
   3. Apply primer to substrate surfaces at rates as required by membrane manufacturer.

C. Wood Nailers, Wood Curbs, and Wood Cants: Install securely to substrate in accordance with roofing manufacturer's and NRCA recommendations.
   1. Nailers: Match thickness of roof insulation system unless otherwise indicated.

D. Bitumen Heating: Heat as recommended by manufacturer.
   1. Heat and apply bitumen according to EVT Method as recommended by NRCA.

E. Pitch Pockets: Not permitted.

3.3 INSTALLATION

A. General: Do not expose materials vulnerable to water or sun damage in quantities greater than can be weatherproofed during same day.
   1. Provide manufacturer's required night seal at end of each day to protect installed roofing from water penetration.

B. Roof Insulation:
   1. General: Install insulation flush with adjacent insulation to ensure no ponding water occurs.
      a. Cant Strips: Install as recommended by manufacturer and shown on Drawings.
      b. Total insulation thickness: Match existing.
   2. Lay insulation boards to moderate contact without forcing joints. Cut insulation to fit neatly to perimeter blocking and protrusions through roof. Do not install cracked or broken boards. Lay second layer of insulation with joints staggered from first layer.
   3. Attach insulation to match existing methods. Install insulation parallel to flute direction.]

C. BUR Membrane:
   1. General: Apply roofing membrane in number of plies to match existing system, mopped at rate and temperatures required by manufacturer to ensure proper application.
      a. Maintain asphalt within recommended temperatures at point of membrane embedment. Do not heat asphalt above flash point.
      b. Ensure asphalt is applied in quantity to provide proper adhesion.
      c. Install felts smooth, free of tears, wrinkles, and bubbles. Cut felts to fit neatly around projections and penetrations.
      d. Solid mop under and between felts to provide complete, uniform coverage. Felt shall not touch felt.
   2. Overlap edges and ends of felts; distance as required by manufacturer. Seal as required by manufacturer. Stagger end laps 3 feet minimum.
   3. Shingle joints on sloped substrate in direction of drainage. Verify proper direction with manufacturer for high slope areas.
   4. Seal felts to adjoining surfaces.
   5. Continue felts up vertical surfaces minimum 4 inches above cant top or edge strip unless otherwise noted. Fasten or adhere top of membrane with devices and at locations and frequency as required by manufacturer.
   6. Install two plies of membrane with 4 inch side laps and 6 inch end laps.
   7. Top Sheets: Install one lapped courses of modified bituminous membrane sheet.
   8. Apply additional granules in same color as membrane into hot asphalt bleedout at laps and edges.

D. Termination Bar: Mechanically fasten termination bar at maximum 8 inches on center to establish compression seal at top of membrane flashing for typical conditions.

DocuSign Envelope ID: 330DEBD6-9A9E-4F34-BDCC-1AC1BAA701E9

3.4 CLEANING

A. General: In areas where finished surfaces are soiled by work of this Section, consult manufacturer of surfaces for cleaning advice and conform to their documented instructions.

B. Repair or replace defaced or disfigured finishes caused by work of this Section.

END OF SECTION

DocuSign Envelope ID: 330DEBD6-9A9E-4F34-BDCC-1AC1BAA701E9

SECTION 99-072100

THERMAL INSULATION

PART 1 - GENERAL

1.1 SUMMARY

A. Section Includes:
   1. Batt insulation above suspended ceilings.

B. Related Sections:
   1. Section 99-092900 – Gypsum Board: Acoustical Insulation.

1.2 SUBMITTALS

A. Product Data: Submit product data for each product.

1.3 DELIVERY, STORAGE, AND HANDLING

A. Deliver, store, and handle products in accordance manufacturer's instructions.

B. Identify products with appropriate markings of applicable testing and inspecting organization.

C. Storage and Protection:
   1. Store materials raised off floor or ground and under cover to keep dry.
   2. Protected from weather, direct sun light, contamination, sources of ignition, and damage from construction operations.

PART 2 - PRODUCTS

2.1 MATERIALS

A. Fiberglass Insulation – General Requirements:
   1. Preformed Units: Sizes to fit applications indicated; selected from manufacturer's standard thicknesses, widths, and lengths.
   2. Use formaldehyde free materials where available.
   3. Maximize use of recycled material with minimum of 20 percent recycled glass cullet.

B. Fiberglass Batt Insulation – Unfaced.
   1. General:
      a. Glass fiber composition, friction fit type, unfaced.
      b. Thermal resistance "R" values:
         1) Ceilings: R-19.
   2. Thermal resistance: ASTM C518, "R" value of 3.2 per inch of thickness at 75 degrees F mean temperature.
   3. Fire rating: ASTM E84, Flame spread 25 or less and smoke development 50 or less.
   4. Acceptable Products:
      a. Unfaced Building Insulation, CertainTeed.
      b. Thermal Batt Insulation, Owens Corning.
      c. Unfaced Thermal-SHIELD, Johns Manville Corporation.

C. Refer to Section 99-092900 for acoustical insulation.

PART 3 - EXECUTION

3.1 EXAMINATION

A. Examine conditions and proceed with work when substrates are ready.

B. Verify that work of other trades which will be covered by insulation is complete, approved, and tested.

3.2 INSTALLATION

A. General: Comply with manufacturer's instructions.

DocuSign Envelope ID: 330DEBD6-9A9E-4F34-BDCC-1AC1BAA701E9

B. Batt Installation:
   1. Install insulation after ceiling suspension system has been installed.
   2. Provide accessories to ensure insulation remains in specified position.
   3. Fit insulation tight within spaces leaving no gaps or voids.
   4. Butt insulation tightly.
   5. Cut and fit tightly around items penetrating insulation.
   6. Stagger butt joints.
   7. Use batts free of damage.
   8. Install insulation to avoid voids or openings to occur.
   9. Cut and trim insulation neatly, to fit spaces.
   10. Cut insulation oversize to ensure tight butt joints when installed. Cut insulation to fit around protrusions and irregularly shaped projections.

3.3 PROTECTION

A. Protect finished work.

B. Protect insulation from moisture until building is made watertight.

END OF SECTION

DocuSign Envelope ID: 330DEBD6-9A9E-4F34-BDCC-1AC1BAA701E9

SECTION 99-074213

METAL WALL PANELS

PART 1 - GENERAL

1.1 SUMMARY

A. Section Includes:
   1. Factory formed, custom shape to match existing, field assembled aluminum, galvanized, or galvalume corrugated panels, complete with related flashings, closures, drips, trim, fasteners, and accessory components. Panels will be field painted.
   2. Supplementary framing, subgirts, clips, anchoring devices, fasteners, and accessories.

B. Related Section: 99-099000 – Painting and Coating: Field painting of metal wall panels.

1.2 SYSTEM REQUIREMENTS

A. Design Requirements:
   1. Manufacturer is responsible for designing system, including anchorage to structural system and necessary modifications to meet specified requirements, including code dictated wind loads, and to maintain visual design concepts.
   2. Drawings are diagrammatic and are intended to establish basic dimension of units, sight lines, and profiles of units.
   3. Make modifications only to meet field conditioned and to ensure fitting of system components.
   4. Obtain Architect's approval of modifications.
   5. Provide concealed fastening wherever possible.
   6. Attachment considerations: Account for site peculiarities and expansion and contraction movements so there is no possibility of loosening, weakening and fracturing connection between units and building structure or between components themselves.
   7. Obtain Architect's approval for connections to building elements at locations other than indicated in Drawings.
   8. Accommodate building structure deflections in system connections to structure.

B. Performance Requirements:
   1. System to accommodate movement of components without buckling, failure of joint seals, undue stress on fasteners, or other detrimental effects when subjected to seasonal temperature changes and live loads.
   2. Provide positive drainage to exterior for moisture entering or condensation occurring within panel system.

C. Interface With Adjacent Systems:
   1. Integrate design and connections with adjacent construction.
   2. Accommodate allowable tolerances and deflections for structural members in installation.

1.3 SUBMITTALS

A. Product Data:
   1. Submit product data for each product.
   2. Include information for sealants, accessories, and other required components.

B. Shop Drawings:
   1. Submit total layout, including dimensions, construction details, profiles, supports, anchorage, trim, flashing, and methods of anchorage and attachment.
   2. Show details of weatherproofing at edges, terminations, and change of profiles.
   3. Indicate panel terminations and transitions, including intersections with masonry, roof panels, and change of direction pieces.
   4. Show subgirts and fasteners.
   5. Include elevation showing complete layout of each wall.

DocuSign Envelope ID: 330DEBD6-9A9E-4F34-BDCC-1AC1BAA701E9

C. Samples: Submit 2 by 3 foot sample panel of each type for verification of matching existing panels.

1.4 QUALITY ASSURANCE

A. Manufacturer Qualifications:
   1. Company specializing in factory fabrication of metal wall panels.
   2. Minimum 10 years documented experience.

1.5 FIELD SAMPLES

A. Sample Installation:
   1. Construct sample wall panels for both interior and exterior conditions.
   2. Size: 6 feet wide by full height.
   3. Show joints, underlap on existing flashings, fasteners, and construction techniques.
   4. Accepted Field Sample: May remain part of completed Work.

1.6 DELIVERY, STORAGE AND HANDLING

A. Deliver, store, and handle products in accordance manufacturer's instructions.

B. Protection:
   1. Protect products and accessories from damage and discoloration during transit and at Project site.
   2. Store materials on built-up surfaces.
   3. Slope panels for drainage, and to protect against damage by weather and construction operations.

PART 2 - PRODUCTS

2.1 MATERIALS AND COMPONENTS

A. Metal Materials:
   1. Aluminum Sheet: Coil-coated primed sheet, ASTM B209, alloy as standard with manufacturer, with temper as required to suit forming operations and structural performance required.
   2. Steel Panels:
      a. Hot-dip aluminum-zinc-coated steel sheet (Galvalume) complying with ASTM A792 with class AZ-50 coating designation.
      b. Grade 40 or to suit manufacturer's standards.
      c. Galvanized sheet steel, ASTM A653, Grade 33, with G90 zinc coating.
   3. Manufacturer may use aluminum, Galvalume or galvanized sheet steel at its option.
   4. Finish: Prime painted for field finishing.

B. Corrugated Panels: Overlapping panels for exposed fasteners.
   1. 34 inch minimum exposed width.
   2. Match existing profile using custom shapes as necessary for snug installation over existing.
   3. Corrugations of 3/4 to 7/8 inch.
   4. Metal Thickness: 0.032 inch minimum.
   5. Finish: Prime painted.
   6. Closures: Contour type rubber, neoprene, or metal as recommended by manufacturer; shape to match panel profile.

C. Subgirt Framing Components:
   1. Sheet steel with 1.25 ounce per sq ft galvanized coating.
   2. Size, configuration, gage, and spacing to accept metal panel system for attachment to building frame; 16 gage thickness minimum.

D. Internal and External Corner Trim:
   1. Same materials, thickness, and finish as adjacent panels.
   2. Profile to suit system; brake formed to required angles.
   3. Mitered internal corners, back braced to maintain continuity of profile.

DocuSign Envelope ID: 330DEBD6-9A9E-4F34-BDCC-1AC1BAA701E9

E. Flashing, Copings, Trim, Closure Pieces, Drips, and Accessories:
   1. Same material, thickness, and finish as adjacent metal panels, brake formed to required profiles.
   2. Comply with standards conforming to recognized industry standard sheet metal practice.

F. Fasteners:
   1. 300 series stainless steel with neoprene washers and exposed screw head color matched to adjacent panel where exposed.
   2. Use exposed fasteners aligned in both directions to attach corrugated panels to subframing.
   3. Provide metal-backed neoprene washers under heads of exposed fasteners bearing on weather side of panels.

2.2 FABRICATION

A. Forming: Factory form, uniformly dimension, one-piece lengths to avoid field cutting where possible.

B. Fabrication of panels on site not permitted.

PART 3 - EXECUTION

3.1 EXAMINATION

A. Examine conditions and proceed with work when substrates are ready.

B. Examine framing and adjacent surfaces for conditions that would adversely affect execution.

C. Examine alignment of support system and verify that acceptable tolerances have been met.

3.2 INSTALLATION

A. Install system in accordance with manufacturer’s instructions.

B. Subgirts:
   1. Install subgirts on spacing determined by manufacturer to comply with design requirements.
   2. Install subgirts parallel to each other, securely fastened to structure to transfer live and dead loads to structure.
   3. Install girts, angles, and other secondary structural panel support members and anchorage in accordance with AISC Manual of Steel Construction "Code of Standard Practice."

C. Fastening:
   1. Provide expansion and contraction movement capability as necessary.
   2. Permanently shim and fasten panel system to subgirt framing system at spacing required by panel manufacturer.
   3. Align, level, and plumb, within specified tolerances.
   4. Exterior: Remove fasteners from existing panels. Install new panels over existing with new fasteners placed using existing panel hole.
   5. Tuck new panel under existing flashing.
   6. Use proper tools to obtain controlled uniform compression for positive seal without rupture of neoprene washer.

D. Install accessories, flashings, closures, and related trim to provide complete watertight system.

E. Seal and place gaskets to prevent weather penetration.

F. Coordinate installation of panels with adjacent construction to ensure watertight enclosure.

G. Tolerances:
   1. Maximum offset from true alignment between adjacent members butting or in line: 1/8 inch.
   2. Maximum variation from plane or location indicated on Drawings: 1/4 inch.

H. Field adjust and align using adjustments within fastening methods.

3.3 CLEANING

A. Perform wipe-down cleaning as work progresses.

DocuSign Envelope ID: 330DEBD6-9A9E-4F34-BDCC-1AC1BAA701E9

3.4 PROTECTION

A. Protect finished work.

B. Protect panel system from damage, staining, or soiling after installation. Replace components which have been scratched, dented, or otherwise showing signs of damage or improper installation.

END OF SECTION

DocuSign Envelope ID: 330DEBD6-9A9E-4F34-BDCC-1AC1BAA701E9

SECTION 99-076000

FLASHING AND SHEET METAL

PART 1 - GENERAL

1.1 SUMMARY

A. Section Includes: Sheet metal flashing, counterflashing, and associated trim.

1.2 REFERENCES

A. Reference Standards: Comply with applicable provisions for design, materials, fabrication, and installation of component parts of Sheet Metal and Air Conditioning Contractors National Association (SMACNA), 6th Edition.

1.3 SUBMITTALS

A. Shop Drawings:
   1. Indicate typical layout including dimensions, configuration, locations, interface with adjacent systems, clearances, tolerances, frequency of attachment, and fabrication details.
   2. Submit detail drawings of transitions, intersections, and connections.

1.4 QUALITY ASSURANCE

A. Fabricator's Qualifications: Company specializing in sheet metal flashing work with 3 years documented experience in similar size and type of installations.

B. Certifications: Submit fabricator's certification that products furnished for Project meet or exceed specified requirements.

1.5 DELIVERY, STORAGE AND HANDLING

A. Deliver, store, and handle products in accordance manufacturer's instructions.

B. Stack pre-formed material to prevent twisting, bending, and abrasions, and to provide ventilation.

C. Prevent contact with materials which may cause discoloration or staining.

PART 2 - PRODUCTS

2.1 MATERIALS

A. Galvanized Steel Sheet:
   1. General: Zinc coating, hot dip galvanized, flattened sheets, chemically treated.
   2. Commercial Quality: ASTM A653, G90
   3. Lock-Forming Quality: ASTM A653, G90
   4. Thickness: As indicated on Drawings; 24 gage minimum or as recommended in Architectural Sheet Metal Manual for intended purposes.
   5. Finish: Mill phosphatized where indicated for painting.

2.2 ACCESSORIES

A. Fasteners:
   1. Materials: AISI Series 300 for stainless and galvanized steel; aluminum for aluminum sheets.
   2. Screws and Bolts: Sufficient size and length to sustain imposed stresses.

B. Solder Materials:
   1. Flux: Type as recommended by sheet material manufacturer; not detrimental to base material.
   2. Solder: ASTM B32, 50 percent tin/50 percent lead for galvanized steel.

DocuSign Envelope ID: 330DEBD6-9A9E-4F34-BDCC-1AC1BAA701E9

C. Asphalt Mastic: SSPC-Paint 12, solvent-type asphalt mastic, containing no asbestos fibers, compounded for 15 mil dry film thickness per coat.

D. Sealants:
   1. Silicone—General Purpose sealant specified in Section 99-079200.
   2. Color as selected by Architect from full range of manufacturer's standard colors.

2.3 FABRICATION

A. General:
   1. Shop fabricate components to maximum extent possible to minimize site fabrication.
   2. Fabricate to allow for adjustments in field for proper anchoring and joining.
   3. Form sections true to shape, accurate in size, square, free from distortion and defects.
   4. Fabricate cleats and starter strips of same material as sheet, interlockable with sheet.
   5. Fabricate corners from one piece with minimum 18 inch long legs; solder for rigidity; seal with sealant.
   6. Solder
      a. Solder and seal metal joints except those indicated or required to be expansive type joints.
      b. After soldering, remove flux. Wipe and wash solder joints clean.

B. Seams:
   1. Provide following seam types unless noted or detailed otherwise.
   2. Flat: Overlapped and sealed.

C. Sheet Metal Thickness/Mass:
   1. Flashing: In accordance with SMACNA Chapter 4.

D. Flashing and Counter Flashing:
   1. Fabricate as indicated on Drawings and in accordance with SMACNA Architectural Sheet Metal Manual, Chapter 4.
   2. Hem exposed flashings on underside 1/2 inch; miter and seam corners.
   3. Fabricate vertical faces with bottom edge formed outward 1/4 inch and hemmed to form drip.
   4. Fabricate flashings to allow toe to extend minimum 2 inches over wall surfaces.

PART 3 - EXECUTION

3.1 EXAMINATION

A. Examine conditions and proceed with work when substrates are ready.

3.2 PREPARATION

A. Field measure site conditions prior to fabricating work.

B. Install edge strips and cleats before starting installation.

3.3 INSTALLATION

A. General:
   1. Install metal work in accordance with SMACNA.
   2. Install units plumb, level, square, and free from warp or twist while maintaining dimensional tolerances and alignment with surrounding construction.
   3. Apply asphalt mastic on metal surfaces of units in contact with cementitious materials and dissimilar metals.
   4. Fit flashings tight in place. Make corners square, surfaces true and straight in planes, and lines accurate to profiles.
   5. Miter, lap seam and close corner joints with solder. Seal seams and joints watertight.
   6. Install expansion joints at frequency recommended by SMACNA. Do not fasten seams such that movement is restricted.
   7. Coordinate with installation of roofing system and roof accessories.

B. Flashing
   1. Secure flashings in place using concealed fasteners.

DocuSign Envelope ID: 330DEBD6-9A9E-4F34-BDCC-1AC1BAA701E9

2. Use exposed fasteners only in locations approved by Architect.

3.4 CLEANING

A. Upon completion of each area of soldering, carefully remove flux and other residue from surfaces. Neutralize acid flux by washing with washing soda solution, and then flushing clear water rinse. Use special care to neutralize and clean crevices.

END OF SECTION

DocuSign Envelope ID: 330DEBD6-9A9E-4F34-BDCC-1AC1BAA701E9

SECTION 99-079200

JOINT SEALANTS

PART 1 - GENERAL

1.1 SUMMARY

A. Related Sections:
   1. Section 99-076000 - Flashing and Sheet Metal.
   2. Section 99-084413 - Glazed Aluminum Curtain Walls.
   3. Section 99-092900 - Gypsum Board.
   4. Section 99-093000 - Tiling.

1.2 DEFINITIONS

A. Use definitions in ASTM C717.

B. Non-Bleeding: Not capable of exuding liquid chemical components of sealant.

C. Non-Staining: Not capable of discoloring joint substrate.

D. One-Stage Sealing: Weatherproof sealing of joints at the exterior face of the wall section; sealant acts as both water and air seal.

E. Primary Seal: Deflector seal in two-stage sealing.

F. Sealant System: Sealant, sealant backing, and primer intended for use in particular condition.

1.3 SUBMITTALS

A. Product Data:
   1. Submit product data and product specifications for each product.
   2. Include data to indicate chemical characteristics, performance criteria, limitations, substrate preparation, installation requirements, and curing requirements.
   3. Include information for accessories and other required components.
   4. Include color charts indicating manufacturer’s full color range available of each sealant type for Architect’s initial selection.

B. Samples: Submit four 1/4 inch diameter by 2 inch long samples illustrating sealant colors for each product exposed to view.

C. Submit following Informational Submittals:
   1. Test Reports: Submit written results of testing specified as part of Source and Field Quality Control articles.
   2. Certifications specified in Quality Assurance article.
   3. Qualification Data: Manufacturer's and installer's qualification data.
   4. Manufacturer's instructions. Include requirements for surface preparation, priming, joint size ratios, adhesion testing, and perimeter conditions requiring special attention.
   5. Manufacturer's field reports.

D. Closeout Submittals:
   1. Warranty: Submit specified warranty.

1.4 QUALITY ASSURANCE

A. Single Source Responsibility:
   1. Provide products for each sealant system from one manufacturer for entire Project, unless otherwise acceptable to Architect.
   2. Provide products from a single manufacturer to ensure material compatibility where different sealant materials come in direct contact with each other.
   3. Provide each sealant system as complete unit, including accessory items necessary for proper function.

B. Manufacturer Qualifications: Company specializing in manufacturing products specified in this Section with minimum 5 years experience.

DocuSign Envelope ID: 330DEBD6-9A9E-4F34-BDCC-1AC1BAA701E9

C. Applicator Qualifications: Acceptable to manufacturer, specializing in applying sealants, with experience on at least 5 projects of similar nature in past 5 years.

D. Certifications:
   1. Manufacturer's Certification that Products:
      a. Furnished for Project meet or exceed specified requirements.
      b. Assembled for each joint are compatible with each other and with joint substrates under conditions of service and application.
      c. Are suitable for the indicated use.
   2. Manufacturer's certification that sealants, primers, and cleaners, comply with local regulations controlling the use of volatile organic compounds.
   3. Contractor's and installer's certification that products are installed in accordance with Contract Documents, based on inspection and testing specified as part of Field Quality Control.

1.5 PRE-INSTALLATION CONFERENCE

A. Conduct pre-installation conference.

B. Convene pre-installation conference 3 weeks prior to commencing work of this Section.

C. Conference Purpose and Agenda:
   1. Visit Project site to analyze site conditions, and inspect surfaces and joints to be sealed in order that recommendations may be made should adverse conditions exist.
   2. Review mock-up and field sample.
   3. Discuss following items:
      a. Substrate conditions.
      b. Preparatory work.
      c. Weather conditions under which work will be done.
      d. Anticipated frequency and extent of joint movement.
      e. Joint design.
      f. Sealant installation procedures.

1.6 DELIVERY, STORAGE AND HANDLING

A. Deliver, store, and handle products in accordance manufacturer's instructions.

B. Deliver materials to site in unopened containers and bundles with labels indicating:
   1. Manufacturer's name.
   2. Product name and designation.
   3. Color.
   4. Expiration period for use.
   5. Working life.
   6. Curing time.
   7. Mixing instructions for multi-component materials.

C. Storage and Protection:
   1. Store products within manufacturer's required temperature and humidity ranges.
   2. Prior to use, condition products within manufacturer's required temperature range, humidity range, and time period.

1.7 PROJECT CONDITIONS

A. Environmental Requirements:
   1. Apply sealant when the following are within manufacturer's limits during and for 24 hours after sealant installation:
   2. Ambient and surface temperatures.
   3. Relative humidity.
   4. Do not apply sealants to wet or frozen surfaces.
   5. Comply with manufacturer's requirements regarding application of sealants in vicinity of curing sealants of a different material.

DocuSign Envelope ID: 330DEBD6-9A9E-4F34-BDCC-1AC1BAA701E9

1.8 WARRANTY

A. Warrant installed products to be free from defects in material, labor, or installation techniques for 20 years on silicones used at exterior building envelope, 2 years at sealants used at interior locations.

B. Include coverage for installed sealants and accessories which:
   1. Fail to achieve air tight seal.
   2. Fail to achieve watertight seal.
   3. Exhibit loss of adhesion.
   4. Exhibit loss of cohesion.
   5. Do not cure.

PART 2 - PRODUCTS

2.1 MATERIALS

A. Acrylic Latex (Designation AL):
   1. Description:
      a. ASTM C834.
      b. Non-sag; non-staining; non-bleeding.
      c. Joint movement range without cohesive/adhesive failure: Plus 7.5 percent to minus 7.5 percent of joint width.
      d. Color: As selected by Architect from manufacturer's full color range.
   2. Acceptable Products:
      a. AC-20, Pecora Corporation.
      b. Sonolac, Sonneborn Building Products.
      c. Acrylic Latex Tremflex 834, Tremco, Inc.

B. Silicone—General Purpose (Designation S-GP):
   1. Description:
      a. ASTM C920:
         1) Type: S
         2) Grade: NS
         3) Class: 25
         4) Uses: NT, M, G, A, O
      b. Single component, neutral curing, non-staining, non-bleeding silicone sealant.
      c. Medium modulus silicone for metal to metal and metal to adjacent substrates; Low modulus silicone for all other locations.
      d. Joint movement range without cohesive/adhesive failure: Plus 50 percent to minus 50 percent of joint width.
      e. Color: Selected by Architect from manufacturer's full color range.
      f. Acceptable Medium Modulus Products:
         1) 795, Dow Corning.
         2) Silpruf, General Electric.
         3) Spectrem 2, Tremco.
      g. Acceptable Low Modulus
         1) 790, Dow Corning.
         2) 890, Pecora.
         3) Spectrem 1, Tremco.

C. Urethane—Traffic-Bearing (Designation U-TB): ASTM C920, Type M, Grade P:
   1. Sealant containing mercury not allowed.
   2. Class: 25. Joint movement range without cohesive/adhesive failure: Plus 25 percent to minus 25 percent of joint width.
   3. Uses: T, M, O
   4. Chemical curing, non-staining, non-bleeding.
   5. Shore A Hardness: 40 minimum, when tested in accordance with ASTM C661.
   6. Color: As selected by Architect from complete range available from manufacturer.

DocuSign Envelope ID: 330DEBD6-9A9E-4F34-BDCC-1AC1BAA701E9

7. Acceptable Products.
   a. NR-200, Pecora.
   b. Vulkem 245, Tremco.
   c. Sikaflex 2c/SL, Sika.
   d. SL 2 Sealant, Sonneborn Division of BASF Building Systems, Shakopee, MN.
   e. THC-900, Tremco.

2.2 ACCESSORIES

A. Joint Cleaner:
   1. Chemical cleaners required by sealant manufacturer for substrates encountered, compatible with sealant backing bond breaker materials.
   2. Free of substances capable of staining, corroding, or harming:
      a. Joint substrates.
      b. Adjacent nonporous surfaces.
      c. Sealant.
      d. Sealant backing.
   3. Formulated to promote optimum adhesion of sealants to joint substrates.

B. Primer:
   1. Dyed coating material required by sealant manufacturer for enhancing sealant adhesion to joint substrates.
   2. Non-staining to joint substrate beyond the substrate surface.
   3. Required for use unless not required by results of:
      a. "Manufacturer’s sealant-substrate compatibility and adhesion test" described under Source Quality Control.
      b. "Field hand-pull adhesion test" under Field Quality Control.

C. Sealant Backing Bond Breaker Rod:
   1. Non-staining material.
   2. Compatible and non-adhering to sealant when tested in accordance with ASTM C1087.
   3. Compatible with sealant, joint substrates, primers, and other sealant backing bond breakers.
   4. Sealant manufacturer approved.
   5. Sized and shaped to provide optimum performance and backing to sealant.
   6. Preformed, compressible, resilient, non-staining, non-outgassing, non-waxing, non-extruding, cylinder-shaped plastic foam rods compliant with ASTM D1056.
   7. Open Cell Polyurethane: Use not permitted unless required by sealant manufacturer.
   8. Closed Cell Polyethylene:
      a. Non-absorbent to liquid water.
      b. Use in wall and ceiling joints unless otherwise required by sealant manufacturer.
   9. Reticulated Polymeric: Sof®-Rod, Nomaco, Inc.
   10. Unless otherwise required by sealant manufacturer, oversize rod to be larger than joint width by following minimum amounts:
      a. Open Cell Polyethylene: 50 percent.
      b. Closed Cell Polyethylene: 33 percent.
      c. Reticulated Polymeric: 25 percent.

D. Elastomeric Tubing Joint Filler:
   1. Neoprene, butyl, EPDM, or silicone tubing compliant with ASTM D1056.
   2. Shore A hardness of 70.
   3. Compatible with sealant, joint substrates, primers, and other sealant backing bond breakers.
   4. Use in pavement joints, unless otherwise required by sealant manufacturer.
   5. Use sealant backing bond breaker tape to separate sealant from rod.
   6. Unless otherwise required by sealant manufacturer, oversize rod to be larger than joint width by 25 percent the following minimum amounts:

DocuSign Envelope ID: 330DEBD6-9A9E-4F34-BDCC-1AC1BAA701E9

E. Sealant Backing Bond Breaker Tape:
   1. Pressure sensitive polyethylene tape or tetrafluorethylene self-adhesive tape required by sealant manufacturer to suit application.
   2. Minimum Thickness of 11 mils.

F. Masking Tape: Non-staining, non-absorbent material compatible with sealants and surfaces adjacent to joints.

G. Tooling Liquids: Non-staining material approved by manufacturer to reduce adhesion of sealant to joint finishing tools.

H. Adhesives shall meet or exceed the VOC and chemical component limits of Cal-GREEN Table 5.504.4.1 Adhesive VOC Limit requirements.

I. Sealants shall meet or exceed the VOC and chemical component limits of Cal-GREEN Table 5.504.4.2 Sealant VOC Limit requirements.

2.3 MIXES

A. Comply with manufacturer's instructions.

B. Mix thoroughly with mechanical mixer without mixing air into sealants.

C. Continue mixing until sealant is uniform in color and free from streaks of unmixed materials.

PART 3 - EXECUTION

3.1 EXAMINATION

A. Examine conditions and proceed with work when substrates are ready.

B. Ensure that concrete and masonry have cured minimum of 28 days.

C. Verify that sealant backing is compatible with sealant.

D. Verify that substrate surface:
   1. Is within manufacturer's moisture content range.
   2. Complies with manufacturer's cleanliness and surface preparation requirements.

E. Joint Width:
   1. Verify joints are greater than minimum widths required by manufacturer.
   2. If joints are narrower than minimum required widths, widen narrow joints to indicated width.
   3. Do not place sealant in joints narrower than manufacturer's required minimum.

3.2 PREPARATION

A. Prepare, clean, and prime joints in accordance with manufacturer's instructions.

B. Remove loose materials and matter which might impair adhesion of primer and sealant to substrate.

C. Remove form release agents, laitance, and chemical retarders, which might impair adhesion of primer and sealant to concrete and masonry surfaces.

D. Comply with ASTM C1193.

E. Protect elements adjoining and surrounding work of this Section from damage and disfiguration.

F. Priming: Prime joint substrates as recommended by manufacturer for actual project conditions. unless priming is not required by:
   1. Apply primer to substrate areas where joint sealant is to adhere.
   2. Comply with manufacturer's sequencing requirements for joint priming and sealant backing bond breaker rod installation to assure required primer application coverage and rate without placement of primer on backer rod surface to be in contact with sealant and avoid three-sided sealant adhesion.
   3. Do not allow spillage and migration of primer onto surfaces not to receive primer.
   4. Install sealant to primed substrates after primer has cured.

DocuSign Envelope ID: 330DEBD6-9A9E-4F34-BDCC-1AC1BAA701E9

G. Masking Tape:
   1. Use masking tape to prevent contact of primer and sealant with adjoining surfaces that would be permanently stained or damaged by:
      a. Contact with primer and sealant.
      b. Cleaning methods used to remove primer and sealant smears.
   2. Place continuously along joint edges.
   3. Apply masking tape so it does not shift in position after placement.

3.3 APPLICATION

A. General:
   1. Comply with manufacturer's requirements and instructions.
   2. Comply with results and recommendations from:
      a. "Manufacturer's compatibility and adhesion test" described in Source Quality Control Article.
      b. "Field hand-pull adhesion test" described in Field Quality Control article.
   3. Provide compatible sealant system between dissimilar assemblies and adjacent construction.
   4. Seal locations necessary to create and secure continuous air, water, and vapor enclosure even though Contract Documents may not indicate all locations; do not seal weep holes.
   5. Seal to prevent migration of water, vapor, and air through joints.
   6. Comply with manufacturer's required application temperature and relative humidity ranges. Consult manufacturer when sealant cannot be applied within these ranges.

B. Sealant Backing Bond Breaker:
   1. Measure joint dimensions and size materials to achieve manufacturer-required width-to-depth ratios.
   2. Install to achieve sealant depth and sealant contact depth no greater than distance required by manufacturer for sealant material, joint width, and joint movement range.
   3. Install using blunt instrument to avoid puncturing.
   4. Do not:
      a. Twist, puncture, and tear material.
      b. Leave gaps between ends of material pieces.
      c. Stretch or compress material along its length.
      d. Stretch or compress tape material along its width.
   5. Install to provide optimum joint profile and in manner to provide not less than 1/4 inch sealant depth when tooled.
   6. Install tape where insufficient joint depth makes use of rod not possible. Match tape width to joint width to prevent three-side adhesion. Do not wrap tape onto sides of the joint.
   7. Replace backing bond breaker materials which have become wet with dry materials prior to sealant application.

C. Sealant:
   1. Install sealants at same time as installation of backing bond breaker materials.
   2. Do not exceed manufacturer's required:
      a. Material shelf life.
      b. Material working life.
      c. Installation time after mixing.
   3. Comply with manufacturer's requirements for applying different sealant materials in direct contact with each other.
   4. Use gun nozzle size to suit joint size and sealant material.
   5. Install sealant with pressure-operated devices to form uniform continuous bead.
   6. Use sufficient pressure to fill voids and joints full.
   7. Install to adhere to both sides of joint.
   8. Install to not adhere to back of joint; provide sealant backing.
   9. Install sealant free of air pockets and embedded matter.
   10. Recess sealant 1/8 inch from surface of pavements and horizontal surfaces.

DocuSign Envelope ID: 330DEBD6-9A9E-4F34-BDCC-1AC1BAA701E9

D. Sealant Tooling:
   1. Comply with manufacturer's tooling method requirements.
   2. Tool sealant within manufacturer's tooling time limits.
   3. Tooling liquids:
      a. Comply with manufacturer's requirements regarding use.
      b. Do not use when not permitted by manufacturer.
      c. Do not allow tooling liquids to come in contact with surfaces receiving sealant.
   4. Produce smooth exposed surface.
   5. Tool Sealant to be Free of:
      a. Air pockets and voids.
      b. Embedded impurities.
      c. Surface ridges, sags, and indentations.
   6. Achieve full sealant contact and adhesion with substrate.
   7. Form a concave tooled joint shape indicated in Section A of Figure 5 of ASTM C1193, unless otherwise indicated.
   8. Remove excess sealant from surfaces adjacent to joint.
   9. Allow acrylic latex sealant to achieve firm skin before paint is applied.

E. Masking Tape:
   1. Remove immediately after tooling sealant and before sealant skin forms.
   2. Remove without disturbing sealant.

3.4 FIELD QUALITY CONTROL

A. Field Hand-Pull Adhesion Test:
   1. At field sample:
      a. Before sealant installation is commenced, test materials for indications of staining and poor adhesion to substrate.
      b. Perform after sealants have fully cured.
      c. Perform under observation of manufacturer's technical representative.
   2. Subsequent to commencement of sealant installation:
      a. Perform under observation of manufacturer's technical representative.
      b. Perform minimum of 4 times prior to completion of sealant installation.
      c. Schedule tests at evenly-spaced intervals during sealant installation at discretion of sealant manufacturer.
   3. Procedure:
      a. Make knife cut through sealant from side to side of joint.
      b. At joint's sides, make two cuts approximately 2 inches long meeting cut made across joint width.
      c. Place a mark on cut portion of sealant 1 inch from cut across joint width.
      d. Use fingers to grasp 2 inch piece of sealant firmly between mark and cut across joint width.
      e. Pull cut portion outward at an angle of 90 degrees from sealant face.
      f. Use a ruler to measure distance that sealant is pulled.
      g. Pull uncut sealant out of joint to distance recommended by manufacturer for testing adhesive capability, but not less than a distance equal to maximum movement capability in extension.
      h. Hold extended sealant for a minimum of 10 seconds.
      i. If adhesion is proper, sealant should tear cohesively in itself or be difficult to adhesively remove from joint substrate.
   4. Summarize test results in test report. Indicate:
      a. Sealants tested.
      b. Joint substrates.
      c. Cohesive failures.
      d. Adhesive failures.
      e. Pull distance used.
      f. Actions to correct failures and non-complying conditions.

DocuSign Envelope ID: 330DEBD6-9A9E-4F34-BDCC-1AC1BAA701E9

5. In absence of noncomplying conditions, sealants which do not indicate adhesive failure from testing will be considered satisfactory.
6. Replace sealant removed from test locations by applying sealant in accordance with manufacturer's requirements for applying sealant to previously sealed joints.

3.5 CLEANING

A. Clean excess sealants and sealant smears from adjacent surfaces as application progresses; comply with sealant manufacturer's requirements and manufacturer of surface in which joints occur.

B. Repair or replace defaced or disfigured finishes caused by work of this Section and replace where installation techniques result in unsatisfactory joining of materials and unsightly conditions.

3.6 PROTECTION

A. Protect sealants from contamination until cured.

B. Protect sealant joints in horizontal surfaces from foot and vehicular traffic until cured.

3.7 SCHEDULE

A. Items Not to be Sealed:
   1. Joints, perimeter, and penetrations in sound-rated assemblies. Use acoustical sealant specified with sound-rated assembly in Section 99-092900.
   2. Weep holes.

B. Sealant Schedule:
   1. Exterior Locations:
      a. Wall Joints: Designation S-GP; use primer where required by manufacturer.
      b. Joints and Perimeter of Penetrations in Horizontal Pedestrian and Vehicle Traffic Surfaces: Designation U-TB.
   2. Interior Joints:
      a. Wall and Ceiling Joints subject to Movement: Designation S-GP.
      b. Wall and Ceiling Joints not subject to Movement: Designation AL.
      c. Interior side of exterior openings: S-GP.
      d. Floor Joints, including tile: Designation U-TB.

END OF SECTION

DocuSign Envelope ID: 330DEBD6-9A9E-4F34-BDCC-1AC1BAA701E9

SECTION 99-080114

WOOD DOOR RESTORATION

PART 1 - GENERAL

1.1 SUMMARY

A. Section Includes: Restoration of historic oversized exterior wood doors and glass lites
   1. Existing painted wood has lead based paint. Follow Section 02082 Lead-Related Work for removal of lead based paint.
   2. Repair and replace broken wood pieces.
   3. Replace broken glass.
   4. Repair and refinish existing hardware.
   5. Repair damage; fill holes and losses; sand raised grain, replace missing elements.
   6. Strip paint to bare wood; repaint.

1.2 SYSTEM REQUIREMENTS

A. Design Requirements:
   1. Fabricator is responsible for reviewing condition of existing doors, creating new members where necessary to replace broken or worn-out items, engineering replacement hardware and anchorage to structural frame and necessary modifications to meet specified requirements and maintain visual design concepts.
   2. Employ registered professional engineer, licensed to practice structural engineering in jurisdiction where Project is located, to engineer each replacement components of existing door system.
   3. Engineering shall include, but not be limited to:
      a. Fabrication of replacement wood items, hardware, and miscellaneous components to meet wind loading and seismic forces.
      b. Replacement hardware of sufficient size and strength.
      c. Attachment to adjacent building elements to ensure doors will be fully operational and will not sag or have failure of existing materials to withstand door weight and applied forces.
   4. Assemblies shall be free from rattles, wind whistles and noise due to thermal and structural movement and wind pressure.
   5. Attachment considerations shall take into account site peculiarities and expansion and contraction movements so there is no possibility of loosening, weakening, or fracturing connection between door units and building structure or between door units within themselves.

B. Wind and Seismic Loading: Engineer restored wood doors to withstand wind and seismic loads acting normal to plane of walls as determined by 2013 California Building Code.

1.3 SUBMITTALS

A. Statement of Qualifications:
   1. List of recently completed projects including project name, location, name of owner and architect and description of work and products used.
   2. Certification that contractor/applicator is experienced in the application of the specified products.

B. Product Data: Provide manufacturer's current product data sheets on all products to be used for the Work.

C. Protection Plan: Describe methods for protecting surrounding areas, surfaces, and personnel during the work from contact with strippers, stains, coatings, or other potential sources of damage.

D. Documentation of Existing Conditions: Submit photographic documentation of existing conditions, including overall pictures and close-ups of areas needing repairs.

DocuSign Envelope ID: 330DEBD6-9A9E-4F34-BDCC-1AC1BAA701E9

E. Schedule of Work: Submit schedule of work, including all required mock-ups and submittals and execution steps.

F. Mock-up Proposal: Submit detailed proposal for mock-ups indicating locations and physical extent of mock-ups, proposed restoration and cleaning techniques, and proposed products.

G. Mock-up Documentation Submittals: Contractor shall document, in writing, the procedures used in the preparation of the mockups. This documentation will include the following information:
   1. Cleaning, painting and/or refinishing materials used including concentrations, number of applications, surface preparation method, order and duration of applications.
   2. Equipment used.
   3. Accessory materials used.
   4. Waste disposal requirements.
   5. Photographs: Contractor to provide digital photographs documenting "before" and "after" conditions. Provide close-up detail photographs, as well as overall views.

H. Samples: Samples of replacement wood described in this Section will be required for approval before proceeding with the remainder of the Work. Samples to have specified finish.

I. Shop Drawings:
   1. Stamp shop drawings with seal and signature of professional engineer responsible for design of replacement items and structural attachment to existing structure.
   2. Shop drawings for all newly fabricated wood and for existing elements to be removed and installed, indicating dimensions and details of attachment.
   3. Indicate reactions on existing structure and frames to verify loads form new doors can be accommodated without detrimental effects.

J. Maintenance Instructions: After the Work is complete, maintenance instructions shall be submitted for the Work covered in this Section. These instructions will include recommended routine cleaning materials, procedures, and schedule, to be carried out by the maintenance staff.

K. Certifications: Engineering certifications. Include statement attesting restored wood door components will withstand design wind and seismic loads.

1.4 QUALITY ASSURANCE

A. Restoration Specialist: Specialist shall have not less than ten (10) years successful experience in comparable wood door restoration. Employees assigned to the Work must be skilled in the processes and operations indicated.
   1. Manufacturers: Acceptable manufacturers shall be: Boyett Door & Hardware (510 576-8010; Wooden Window (510) 893-1157; or approved equal.

B. Engineer Qualifications: Registered professional engineer licensed to practice structural engineering in jurisdiction where Project is located, with experience in design of oversized wood door restoration and reactions on existing structures.

C. Pre-Construction Conference: Prior to the start of the Work, there shall be a pre-construction conference among parties directly affected by the Work, including the Contractor, Specialist, Owner, and Architect to review requirements and procedures. Include requirements for review of mock-ups and samples. The conference shall include a walk-through of the job site as required.

D. Codes and Standards:
   1. Adhere to applicable local, State and Federal laws and requirements.
   2. Contractor to require observance of applicable federal and state agency, industry, and manufacturer recommended safety regulations and precautions, including lead paint removal.

E. Performance Standards: Work shall match and blend seamlessly and unobtrusively with adjacent finishes.

F. Mock-ups: Contractor to prepare mock-up of repair and refinishing for each historic door and hardware.
   1. Location and size of mock-ups on existing door to be determined by approved mock-up proposal.

DocuSign Envelope ID: 330DEBD6-9A9E-4F34-BDCC-1AC1BAA701E9

2. Mock-ups to test glass replacement; wood trim repair or replacement, paint stripping, and repainting, as directed by Architect.
3. Contractor to photograph before and after conditions and document procedures and products used (see Submittals).
4. Completed and approved mock-ups shall serve as the standard by which all subsequent work in this Section will be judged.
5. Do not begin work until mock-ups are approved by Architect in writing.

1.5 DELIVERY, STORAGE, AND HANDLING

A. Delivery: Deliver materials to site in manufacturer's original, unopened containers and packages with labels clearly identifying product name and manufacturer.

B. Storage and Handling: Store containers upright in a cool, dry, well ventilated place, out of the sun. Store away from all other chemicals and potential sources of contamination. Keep lights, fire, sparks, and heat away from containers. Do not drop onto or slide across sharp object. Keep containers tightly closed when not in use. Store and handle materials in accordance with manufacturer's instructions.

1.6 PROJECT CONDITIONS

A. Risks: It should be noted that there are inherent risks and health hazards involved with the use of wood stripping chemicals and existing lead based paint. It will be the responsibility of the Contractor to ensure that safety precautions are taken, that respirators with chemical cartridge filters meeting NIOSH and MSHA regulations TC23C are worn when appropriate, as well as solvent resistant gloves and aprons. It shall also be the responsibility of the Contractor to inform all personnel of the risks involved in the work and to make available to them the Material Safety Data Sheets for all products in use, per OSHA regulations.

B. Historic Building-Required Care:
1. Building materials and components shall be considered very fragile and must be dismantled, removed, worked-on, and transported, and in general, handled with special care.
2. Damaged historic materials may not be replaceable, and repair and restoration may be required by Architect.
3. Costs of such repair and restoration may be significant and shall be borne by Contractor.
4. Protection of existing materials, surfaces and finishes is of great importance.

C. Environmental Conditions:
1. Surface and air temperatures must be a minimum of 40 degrees F.
2. Area to be properly ventilated.
3. Work area to be protected from pedestrians.

PART 2 - PRODUCTS

2.1 MATERIALS

A. General: Materials shall conform to the following requirements and shall be new, of the highest grade, free from defects, and of recent manufacture. Alternate materials and procedures are to be used only with the approval of Architect and are to match performance sample.

B. Glue: Acceptable glues for the restoration of the wood doors include exterior grade aliphatic emulsion, casein glue, polyvinyl acetate (PVA) emulsion and synthetic joinery grade glues.

C. TSP: Tri-sodium phosphate, any name brand.

D. Paint Remover: Should be proven effective in removing all existing finish. Caustic Soda-based removers not permitted.

E. Filler: Filler acceptable for use include "Jasco," "Mohawk" or Ren-Weld carvable wood epoxy, Liquid Wood® or Wood Epox® by Abatron, Inc., or other filler capable of being color matched to wood surface color.

F. Paint and Primer: Refer to Section 99-099000.

G. Glass: Refer to Section 99-088000.

DocuSign Envelope ID: 330DEBD6-9A9E-4F34-BDCC-1AC1BAA701E9

H. New or Replacement Materials: Missing or reproduced parts and components must be fabricated of dried lumber of correct moisture content. Match wood genus and species with lumber cut in matching grain and pattern for each type of wood artifact.

I. Tools: Tools required include both soft and stiff bristle brushes, copper or steel bristle brushes, medium and fine steel wool, medium and fine sandpaper, syringes, spatulas, screwdrivers, pry bars, respiratory protection masks with chemical cartridges meeting NIOSH and MSHA regulations TC23C, cotton rags, alcohol heat lamp with small burn-in knife, chisels, and solvent proof gloves and other tools as deemed necessary by the Contractor.

PART 3 - EXECUTION

3.1 GENERAL

A. Contractor shall note that the wood elements are old, valuable and inherently fragile. Great care must be exercised throughout all phases of this Work to protect wood doors, frames, as well as adjacent walls and floors.

B. On-Site Work: Where items of historic wood doors are to be renovated on-site, work to be executed in clean, well-ventilated work area, protected from other areas of the project.

C. Preparation:
   1. Remove all nails, screws, or other protruding objects.
   2. Remove all signs or other extraneous objects. Label and store as directed by Architect.
   3. Remove or mask-off all hardware. Hardware which is removed shall be inventoried, labeled, and stored carefully. All hardware is to be inspected, cleaned, repaired, lubricated, and refinished as necessary for proper operation and appearance.

D. Wood Doors: Restore wood doors with missing or broken panels or trim.

3.2 TREATMENT PROCESSES

A. Removal of Previous Finishes and Refinishing:
   1. Remove all finishes from surface down to bare wood by applying chemical stripper, per manufacturer's printed instructions. Remove residue of strippers, varnish, and stain from surface using medium coarse steel wool and flexible spatula.
   2. Follow regulations for removal of lead based paint.
   3. Neutralize stripped surface with TSP/water mixture using nylon brush.
   4. Allow the newly stripped surfaces to dry at least 24 hours before starting the sanding process.
   5. Sand all surfaces using 100 grit garnet sandpaper and then 220 grit garnet sandpaper. All sanding shall be done with the grain of the wood. Cross grain sanding is not acceptable. Dust surfaces with a soft bristle brush and then lightly wipe surfaces with a tack cloth.
   6. Repair any wood damage per Article "Wood Repair."
   7. Allow surface to dry thoroughly for 12 hours.
   8. Apply prime coat of paint to surfaces, and allow to dry for 24 hours.
   9. Apply finish coats of paint.

3.3 REMOVAL OF EXISTING FINISH

A. Removal of existing finish from wood surfaces:
   1. All exposed surfaces shall be inspected for foreign material such as paint.
   2. Stripping shall be carried out in a controlled manner. In situ work shall be masked and protected to ensure that adjacent surfaces are not marred or damaged by the treatment of the wood doors.
   3. Strippers shall be used in accordance with manufacturer's directions and regulations regarding removal of lead based paint.

DocuSign Envelope ID: 330DEBD6-9A9E-4F34-BDCC-1AC1BAA701E9

3.4 WOOD REPAIR

A. Procedures:
   1. Missing areas of wood over 1" square shall be reproduced in the same genus and species as the original, with the grain configuration and direction chosen to blend in discreetly with the surrounding original. These patches shall be glued and nailed, leveled and fine sanded flush. All joints shall be flush, level and smooth. No tool or sandpaper marks left apparent will be acceptable. All nails should be set and heads stopped with wood stopping.
   2. Losses, gouges or dents under 1" in the veneer or solid wood shall be filled. Such fills should be colored and grained to blend into the surrounding wood.
   3. Any loose parts or lifting veneers shall be reglued with clamps ensuring a flat fault free surface.
   4. Reattach glazing stops or other moldings where loose. Replace where damaged or missing with salvaged wood or new wood to match. The molded profile should match the existing, and the grain should be even and reasonably straight. Machine mounding cutter marks should not be evident, as with good quality joinery work.
   5. Fill junctions between base or other moldings and walls.
   6. Re-repair prior repairs which do not conform to the standards of this Section.

3.5 REPLACEMENT AND REPRODUCTION OF WOOD ARTIFACTS

A. Replacement or reproduction woodwork to match existing in profile, dimension, wood genus or species, graining, coloring, and finish.
   1. Fill nail holes and nicks with filler to match wood color.

3.6 PAINTING AND FINISHING OF WOODWORK

A. General:
   1. It is the aim of this treatment that historic exterior oversized wood doors be repaired, stripped of existing finishes and repainted to ensure a uniform final appearance which matches approved field sample. Any deviation from specified materials or procedures must be approved by Architect.
   2. All materials and procedures used must conform to all pertinent regulations. It shall be the responsibility of the Contractor to identify all applicable regulations and to verify that all materials and procedures are in accordance with regulations.
   3. It shall be the responsibility of Contractor to test materials and procedures called for in specifications to ensure that all necessary steps are taken, that stripping compounds are adequately neutralized, that proper application and drying times are observed, that there are no inherent chemical incompatibilities with the materials called for, and that both the conditions and the procedures are appropriate for completion of Work.
   4. All work shall be protected and kept clean during the finishing process to ensure a finish of the highest quality. Only a finish of uniform color and coverage matching the performance sample and a smooth finish free of dust, pinholes, drips or sag marks will be accepted.

B. Procedure:
   1. Surface appearance should be smooth and even. Sanding of surfaces with at least 220 grit garnet paper should be carried out.
   2. Grain shall be filled as follows only where larger than 1/16". Thin the paste wood filler as necessary with paint thinner. Apply with a brush, working it into the grain, brushing with the grain. Let the filler set up for a few minutes, per manufacturer's instructions, then wipe off the excess, rubbing across the grain. Allow to dry for a least 48 hours. Lightly fine sand before proceeding.
   3. Painting:
      a. Either brush or spray application is acceptable, provided the performance sample is matched.
      b. Paint shall be allowed to dry per manufacturer's directions.
      c. For in situ work, all adjacent surfaces must be masked and protected from drips and spills.

DocuSign Envelope ID: 330DEBD6-9A9E-4F34-BDCC-1AC1BAA701E9

4. Prior to refinishing, wood doors shall be protected from grease, oil, or finger marks. A final inspection shall be carried out to verify that all fills are level and smooth surfaces shall be lightly fine sanded and wiped with a solvent to clean them, if necessary.
5. Application of the Finish:
   a. For in situ work, all adjacent surfaces must be masked and protected from brush marks, spills and runs.
   b. All work is to be delivered with a smooth finish free of dust marks and scratches.

END OF SECTION

DocuSign Envelope ID: 330DEBD6-9A9E-4F34-BDCC-1AC1BAA701E9

SECTION 99-081100

METAL DOORS AND FRAMES

PART 1 - GENERAL

1.1 SUMMARY

A. Section Includes: Doors, frames, and door lights of hollow metal construction.

B. Related Sections:
   1. Section 99-087100 - Door Hardware.
   2. Section 99-088000 - Glazing.

1.2 SYSTEM DESCRIPTION

A. General:
   1. Meet or exceed ANSI/SDI 250.8 and HMMA 861, and more stringent requirements specified in this Section.
   2. Hardware Preparation:
      a. Comply with ANSI A115 Series and SDI 107, except for hardware locations.
      b. Comply with Section 99-087100 for hardware locations.
      c. Mortise, reinforce, drill, and tap frames and doors at factory to receive mortised and concealed hardware in accordance with templates and approved hardware schedules.
      d. Reinforce frames and doors for surface mounted hardware; drilling and tapping will be in field at time of hardware application.
      e. Comply with ANSI/SDI A250.8 and SDI 107 for thickness of hardware reinforcing.

1.3 SUBMITTALS

A. Product Data:
   1. Submit for each type of door and frame specified, including details of construction, materials, dimensions, hardware preparation, core, profiles, and finishes.
   2. Include proof that doors and frames are fabricated in accordance with SDI requirements.

B. Shop Drawings:
   1. Submit schedule indicating opening identification number, door and frame types, sheet metal thickness, dimensions, swing, label, hardware requirements, and undercuts when applicable. Use same identification numbers for openings as shown by Contract Drawings.
   2. Include elevations and details indicating door and frame types, profiles, conditions at openings, methods of anchoring, hardware locations, reinforcements for hardware, core construction, and provisions for vision panels and louvers when applicable.
   3. Clearly identify work that cannot be permanently factory assembled before shipment. Indicate locations of field splice joints and include associated details to ensure proper assembly at project site.

1.4 DELIVERY, STORAGE, AND HANDLING

A. Deliver, store, and handle products in accordance manufacturer's instructions.

B. Store in protected dry area under cover.

C. Place units on wood skids and store in manner that will prevent corrosion and damage.

D. Avoid use of non-vented plastic or canvas coverings which could trap moisture.

E. Store assemblies upright, do not stack flat. Provide space between stacked assemblies to promote air circulation.

DocuSign Envelope ID: 330DEBD6-9A9E-4F34-BDCC-1AC1BAA701E9

PART 2 - PRODUCTS

2.1 MANUFACTURERS

A. Acceptable Manufacturers: Members of Steel Door Institute (SDI) or Hollow Metal Manufacturer's Association (HMMA).
   1. Amweld.
   2. Ceco.
   3. Curries.
   4. Pioneer.
   5. Republic.
   6. Steelcraft.

2.2 MATERIALS

A. Maximize use of recycled steel where possible.

B. Cold-Rolled Steel: ASTM A1008, commercial quality, Class 1, stretcher-leveled, matte finish.

C. Hot-Rolled Steel: ASTM A1011, commercial quality, pickled, and oiled.

D. Galvanized / Galvannealed Steel (Exterior and exterior atmosphere Locations):
   1. Sheet: ASTM A653, A60 or G60 coating designation, zinc coated by hot-dip process, commercial quality, stretcher-leveled, mill phosphatized. WCGS not permitted.
   2. Anchors and Accessories: ASTM A879, minimum Class B coating, zinc coated by electro-deposition, commercial quality, mill phosphatized.

E. Anchor Bolts, Fasteners, and Screws: Manufacturer's standard type, except cadmium or zinc plated finish. Stainless steel also acceptable.

F. Primer: Manufacturer's standard rust inhibitive primer, air-dried or baked, compatible with finish painting specified in Section 99-099000.

2.3 FABRICATION

A. General:
   1. Except where specified or noted otherwise, fabricate frames, door faces and edges using cold-rolled steel. Concealed stiffeners, reinforcing, and other components may be cold-rolled or hot-rolled steel at fabricator's option.
   2. Fabricate frames, doors and related components using galvanized/galvannealed steel where assemblies have exposure to exterior atmosphere.
   3. Fabricate sheet metal work neat in appearance and free from defects, warps, or buckles.
   4. Accurately form metal to required sizes and profiles.
   5. Grind and dress exposed welds smooth and flush with adjacent surfaces.
   6. Remove tool marks and surface imperfections by dressing, filling, and sanding smooth. Do not use metallic filler to conceal manufacturing defects.

B. Edge Clearances:
   1. Between doors and frames at head and jambs: 1/8 inch.
   2. Between meeting stiles at pairs of doors: 1/8 inch.
   3. Between Bottom Edge of Door and Finish Floor at Non-Label Assemblies: In accordance with HMMA 861, ANSI/SDI A250.8 except where larger undercuts are scheduled. Finish floor is defined as top surface of substrate. Where carpet or other applied surface materials are placed over floor substrate and greater than 1/2 inch thickness, provide 1/4 inch clearance.
   4. Between Bottom Edge of Door and Threshold: 1/4 inch.

2.4 FABRICATION - FRAMES

A. General Requirements:
   1. Provide frames based on door grade and model in accordance with ANSI/SDI A250.8 and HMMA 820.
   2. Welded construction required; knocked-down not acceptable.

DocuSign Envelope ID: 330DEBD6-9A9E-4F34-BDCC-1AC1BAA701E9

3. Fully face weld corners, including stops. Grind weld smooth with adjacent surfaces.
4. Fabricate exterior assemblies of 14 gage or 0.067 inch thick steel.
5. Fabricate interior assemblies of 16 gage or 0.053 inch thick steel for door openings 4'-0" or less in width, 14 gage or 0.067 inch thick steel for door openings over 4'-0" in width.
6. Welded construction required; knocked-down not acceptable. Weld joints smooth, full length of joint.
7. Corners of mitered design; stops coped and butted, or mitered.
8. Accurately cope joints of mullions, rails, and other similar tubular members; reinforce joints with concealed clips or sleeves.
9. Closed or tubular members may be fabricated of two pieces if interlocked at base of stops; visible seams or joints are not acceptable.

B. Guard Box:
1. Closed box design, 26 gage or 0.016 inch thick minimum, welded to frame.
2. Required at mortise hardware cutouts for assemblies installed within masonry walls or where assemblies will have frames grouted with mortar or similar materials at time of installation.

C. Spreader: Manufacturer's standard temporary channel or angles tack welded at bottom of jamb members.

D. Floor Anchor Clips:
1. Provide at each jamb and mullions which extend to floor.
2. In areas where concrete topping or other similar construction occurs, provide adjustable design to permit securing to depressed subfloor construction. In lieu of adjustable design, frames may extend to subfloor.

E. Jamb Anchors: Comply with SDI-111 and HMMA 820.
1. Metal Stud Wall Systems: Steel clips welded to frame, type or design compatible with stud system. Locate at top of frame, 12 inch from top, and 24 inch centers maximum intermittently, minimum 4 per jamb.
2. Previously Placed Concrete, Masonry, or Structural Steel: Tension plate and spacer design, welded to frame at approximately 24 inch centers, minimum 3 per jamb. Frames drilled and countersunk for 1/4 inch flathead anchor bolts, set below frame surface.

F. Silencers:
1. Drill or Punch Frames for Silencers. Coordinate hole size with silencers specified in Section 99-087100.
2. Single Interior Doors: 3 at strike jamb.
3. Pair of Interior Doors: 2 at header.
4. Weatherstripped doors: None required.

2.5 FABRICATION - DOORS

A. Flush Doors:
1. Interior Doors: ANSI/SDI Level 2 and Physical Performance Level B, Heavy Duty, Model 1 (1-3/4 inch thick, 18 gage or 0.042 inch thick face sheets, Full Flush Design).
2. Exterior Doors: ANSI/SDI Level 3 and Physical Performance Level A, Extra Heavy Duty, Model 1, 1-3/4 inch thick; 16 gage or 0.053 inch thick face sheets.
3. Option: Custom doors complying with NAAMM Standard HMMA 861 "Type A" may be used in lieu of standard doors constructed in accordance with SDI standards.
4. Core:
   a. Interior: Resin impregnated kraft paper honeycomb.
   b. Exterior: Manufacturer's standard insulated core.
5. Face sheets broken to form and meet in joint on stile edges weld and grind smooth joints on stile edges.
6. Vertical edges continuously reinforced from top to bottom with steel channels or flat bars placed immediately inside of face sheets.
7. Reinforce top and bottom edge full width of door with steel channel not less than 16 gage or 0.053 inch thick.

DocuSign Envelope ID: 330DEBD6-9A9E-4F34-BDCC-1AC1BAA701E9

8. Fabricate exterior doors with top edge closed flush and fabricate bottom edge with flush closure where required for attachment of weatherstripping. Provide openings in bottom closure of exterior doors to permit escape of entrapped moisture.
9. Provide insulating material in void spaces for sound deadening in assemblies utilizing internal core of steel stiffeners.
10. Fill face welds and surface depressions with metallic paste filler or body putty, grind smooth and flush to unblemished finish appearance.
11. Bevel lock or latch edge 1/8 inch in 2 inches at single doors and at meeting stiles at pairs of doors.

B. Glazing Beads:
1. Minimum 18 gage or 0.042 inch thick steel, screw on type, corners butted or mitered, welded to door assembly on security side, removable on opposite side.
2. Factory install and secure loose bead with countersunk oval head screws spaced 8 inch centers maximum and within 2 inches of ends.
3. Coordinate dimensions for glazing rabbets with requirements of Section 99-088000.

C. Vision Openings:
1. Frame openings for sizes indicated.
2. Equip with glazing beads.

D. Astragals:
1. Full height overlapping design, applied on in-active leaf at pairs of interior label doors as necessary to meet label requirements, minimum 20 gage or 0.032 inch thick steel.
2. Full height overlapping design at pairs of exterior doors, welded on active leaf, 1-3/4 inch by 12 gage or 0.093 inch thick steel.

2.6 FINISHES

A. Ferrous and Galvanized Steel Assemblies:
1. Clean surfaces free of mil scale, rust, oil, grease, dirt, and other foreign materials.
2. Phosphatize or chemically treat surfaces before application of prime coat finish.
3. Touch-up areas where abrasions and welding have destroyed zinc coating with zinc-rich paint before application of prime coat finish.
4. Prime Coat: Manufacturer’s standard rust inhibitive primer to produce smooth and uniform coat.

PART 3 - EXECUTION

3.1 EXAMINATION

A. Examine conditions and proceed with work when substrates are ready.

3.2 INSTALLATION

A. Install hollow metal assemblies in accordance with SDI 105 and HMMA 840.

B. Set frames plumb, level, in true alignment, securely fastened to floor with expansion shields and bolts, and fastened to adjoining walls with specified jamb anchors. Remove temporary spreaders and braces.

C. Fill face of countersunk flathead frame anchors with metallic paste filler; grind smooth and flush with frame surface.

D. Install doors accurately in frames maintaining specified clearances. Install hardware in accordance with manufacturer's written instructions and associated templates. Refer to Section 99-087100 for hardware installation requirements.

E. Install glass in accordance with Section 99-088000.

DocuSign Envelope ID: 330DEBD6-9A9E-4F34-BDCC-1AC1BAA701E9

3.3 ADJUSTMENTS

A. After installation of hardware, test and adjust doors for smooth operation.

END OF SECTION

DocuSign Envelope ID: 330DEBD6-9A9E-4F34-BDCC-1AC1BAA701E9

SECTION 99-081412

CUSTOM WOOD DOORS

PART 1 - GENERAL

1.1 SUMMARY

A. Section Includes: Custom oversized wood doors and glass lites to match existing, including hardware.

B. Related Sections:
   1. Section 99-087100 - Door Hardware.
   2. Section 99-088000 - Glazing: Glass for vision panels.
   3. Section 99-099000 – Painting and Coating.

1.2 SYSTEM REQUIREMENTS

A. Design Requirements:
   1. Manufacturer is responsible for engineering each component of system, including anchorage to structural frame and necessary modifications to meet specified requirements and maintain visual design concepts.
   2. Employ registered professional engineer, licensed to practice structural engineering in jurisdiction where Project is located, to engineer each component of custom wood door system.
   3. Engineering shall include, but not be limited to:
      a. Fabrication of wood doors, glazing, and miscellaneous components to meet wind loading and seismic forces.
      b. Hardware of sufficient size and strength.
      c. Attachment to adjacent building elements to ensure doors will be fully operational and will not sag or have failure of existing materials to withstand door weight and applied forces.
   4. Assemblies shall be free from rattles, wind whistles and noise due to thermal and structural movement and wind pressure.
   5. Attachment considerations shall take into account site peculiarities and expansion and contraction movements so there is no possibility of loosening, weakening, or fracturing connection between door units and building structure or between door units within themselves.

B. Wind and Seismic Loading: Engineer custom wood doors to withstand wind and seismic loads acting normal to plane of walls as determined by 2013 California Building Code.

1.3 SUBMITTALS

A. Product Data: Submit to indicate compliance with specified requirements. Include sample of warranty.

B. Shop Drawings:
   1. Stamp shop drawings with seal and signature of professional engineer responsible for design.
   2. Indicate location, size, and operation of each door; elevation of each kind of wood door transom, sidelight, frame, and glazing; construction details, including those for stiles, rails, panels, and moldings (sticking); and other pertinent data.
   3. Indicate prefitting and premachining requirements, including hardware locations.
   4. Indicate reactions on existing structure and frames to verify loads form new doors can be accommodated without detrimental effects.

C. Certifications:
   1. Submit Fabricator's certification that products furnished for Project meet or exceed specified requirements.

DocuSign Envelope ID: 330DEBD6-9A9E-4F34-BDCC-1AC1BAA701E9

2. Engineering certifications. Include statement attesting components, including door assemblies, hardware, frames glass, and miscellaneous components will withstand design wind and seismic loads.

D. Closeout Submittals: Submit specified warranty.

1.4 QUALITY ASSURANCE

A. Manufacturers: Acceptable manufacturers shall be: Boyett Door & Hardware (510 576-8010; Wooden Window (510) 893-1157; or approved equal.

B. Engineer Qualifications: Registered professional engineer licensed to practice structural engineering in jurisdiction where Project is located, with experience in design of oversized custom wood door systems and reactions on existing structures.

C. Comply with applicable provisions of Section 9 of *Architectural Woodwork Standards* (AWS), 1st Edition, October 2009, as adopted and published by Architectural Woodwork Institute (AWI) and the Woodwork Institute (WI).

D. Woodwork Institute (WI) Certification:
1. Wood doors shall be manufactured in accordance with standards established in the Section 9 of *Architectural Woodwork Standards* (AWS), 1st Edition, October 2009, in the grade or grades herein specified or as shown on the Drawings.
2. If the manufacturer is not a WI licensee, Contractor shall furnish to Owner, prior to installation, a Certificate of Reinspection by the WI indicating that the work in question meets the requirements of the WI grade specified.
3. If the manufacturer is a WI licensee, each elevation of work shall bear the WI Certified Compliance grade label indicating the grade specified, and by completion of the job, WI Certified Compliance Certificates shall have been issued certifying that the installation fully meets the requirements for the grade specified.
4. The foregoing shall not be construed to limit the power and authority of Owner to reject any millwork which does not in Owner's opinion meet with any one or more of the specifications of this contract.

E. Safety Glass: Provide products complying with ANSI Z97.1 and testing requirements of 16 CFR, Part 1201, for Category II materials, unless those of Category I are expressly indicated and permitted.

1.5 DELIVERY, STORAGE, AND HANDLING

A. Protect during transit, storage and handling to prevent damage, soiling and deterioration.

B. Comply with manufacturer's instructions and AWS requirements for care and handling of doors.

C. Deliver to site after wet construction operations are completed and dry, and building has reached average prevailing relative humidity.

D. Deliver components in manufacturer's original unopened protective covering or container, clearly marked with manufacturer's name, brand name, and identifying door opening number on covering.

E. Storage: Store in clean, dry, well ventilated area protected from sunlight.
1. Avoid extreme heat, cold, dryness or humidity.
2. Store flat over level surface above floor on wood blocking.
3. Under bottom door and over top of stack; furnish plywood or corrugated cardboard for protection.

F. Handling: Do not drag doors across one another or across other surfaces.

1.6 PROJECT CONDITIONS

A. Environmental Requirements:
1. Comply with manufacturer's written requirements under which products can be installed.
2. Condition doors to average prevailing humidity in installation area prior to installing.

DocuSign Envelope ID: 330DEBD6-9A9E-4F34-BDCC-1AC1BAA701E9

1.7 WARRANTY

A. Furnish to Owner a written warranty for stile and rail wood doors and frames against all defects in materials and workmanship for two years from date of acceptance.
   1. Include hanging, installation of hardware and refinishing which may be required due to repair or replacement of defective doors.
   2. Warranty signed by corporate officer of door manufacturer, agreeing to repair or replace defective doors which have:
      a. Delamination in any degree.
      b. Warp or twist of 1/4 inch or more in any 42 by 84 inch or larger plane of door face.
      c. Telegraphing of stile, rail or core through face to cause surface variation in excess of 1/100 inch in any 3 inch span.

PART 2 - PRODUCTS

2.1 MATERIALS

A. Wood Species and Cut: Weather resistant hardwood as determined by fabricator for paint finish.

B. Door sizes and thicknesses: Match existing for oversized exterior doors.

C. Glazing: Refer to Section 99-088000.

D. Design and Layout: Match existing as indicated on Drawings.

2.2 FABRICATION

A. Project site fitting.

B. Glazed Openings: Glaze doors at factory with glass of type and thickness indicated, complying with Section 99-088000. Install glass using manufacturer's standard elastomeric glazing sealant complying with ASTM C920. Secure glass in place with removable wood moldings. Miter wood moldings at corner joints

C. Transom and Side Panels: Fabricate panels to match adjoining doors in materials, finish, and quality of construction.
   1. Same quality, construction, and appearance as adjacent door.
   2. Color and grain match transom to door.

D. Hardware:
   1. Factory machine doors for hardware that is not surface applied.
   2. Locate hardware to comply with DHI-WDHS-3.
   3. Comply with final hardware schedules, door frame Shop Drawings, DHI A115-W series standards, and hardware templates.
   4. Provide hardware matching existing in appearance for swinging doors. Fabricate hardware of appropriate sizes and strength to accommodate door sizes, weights, and swings.

E. Water repellent treatment to comply with WDMA I.S.4.

F. Flash top of outswinging doors with metal flashing.

2.3 FINISHING

A. Prime paint for field finishing.

B. Refer to Section 99-099000 for painting.

C. Seal top and bottom edges, vision panel cutouts, and mortised hardware cutouts using manufacturer’s standard sealer.

DocuSign Envelope ID: 330DEBD6-9A9E-4F34-BDCC-1AC1BAA701E9

PART 3 - EXECUTION

3.1 FIELD FITTING AND MACHINING

A. Examine openings to verify frames are of correct type and have been installed for proper hanging of doors.
   1. Take accurate field measurements of frames and hardware mortises to verify dimensions and alignment before proceeding with hardware cutouts.
   2. Trim non-fire rated door width by cutting equally on both stile edges. Trim fire rated door width from lock edge only, maximum of 3/16 inch.
   3. Trim non-fire rated door height by cutting on top or bottom edge, maximum of 3/4 inch.
   4. Do not field cut doors down to opening sizes smaller than which doors were manufactured.
   5. Prepare doors for hardware in accordance with hardware templates.
   6. Machine cut mortises for hinges, pivots, locks, latches, cylinders and other similar mortised hardware.
   7. Pilot drill screw and bolt holes.

3.2 WOOD DOOR INSTALLATION

A. Install in accordance with AWS Appendix B – 12 Installation, approved shop drawings, and manufacturer's written instructions.
   1. Install accurately in frame, within clearances to match existing. Install hardware in accordance with manufacturer's written instructions and associated templates to match existing. Refer to Section 99-087100 for general installation requirements.
   2. Install doors to operate freely, but not loosely, free from hinge bound conditions, sticking, or binding. Do not install in frames which would hinder operation of doors.
   3. Ensure doors are free from rattling when in latched position.
   4. After installation of hardware, adjust and check each door to ensure proper operation and function.
   5. Replace or rehang doors which are hinge bound and do not swing or operate freely.
   6. Remove and replace doors which are warped, twisted or which are not in true planes.
   7. Replace shop finished doors damaged during installation.

3.3 ADJUSTING

A. After installation of hardware, adjust and check each door to ensure proper operation and function.
   1. Replace or rehang doors which are hinge bound or which do not swing or operate freely.
   2. Remove and replace doors which are warped, twisted or which are not in true planes.
   3. Refinish or replace field finished doors damaged during installation.

3.4 CLEANING AND PROTECTION

A. Protect finished work.

B. Cleaning: Clean as recommended by manufacturer. Do not use materials or methods which may damage finish.

END OF SECTION

DocuSign Envelope ID: 330DEBD6-9A9E-4F34-BDCC-1AC1BAA701E9

SECTION 99-083100

ACCESS DOORS AND PANELS

PART 1 - GENERAL

1.1 SUMMARY

A. Requirement of Products Covered Under This Section:
   1. Furnish and install access panels as required to access plumbing, fire protection, mechanical and electrical work as necessary for operation and maintenance of concealed equipment, valves, cleanouts, controls, and other similar devices requiring access.
   2. Coordinate requirements with Divisions 21, 22, 23, and 26.

B. Related Sections:
   1. Section 99-087100 - Door Hardware: Keyed cylinders.
   2. Section 99-099000 - Paints and Coatings: Field paint finish.
   3. Division 22 – Plumbing: Coordinate access panel location.
   4. Division 23 – Heating, Ventilating, and Air Conditioning: Coordinate access panel location.
   5. Division 26 – Electrical: Coordinate access panel location.

1.2 SYSTEM DESCRIPTION

A. Design Requirements: Determine specific locations and sizes for access doors and panels needed to gain access to concealed equipment, and indicate on schedule specified under “Submittals” Article.

1.3 SUBMITTALS

A. Product Data: Submit product data for each type of access panel.

B. Shop Drawings: Include complete schedule indicating types, locations, sizes, wall and ceiling construction details, latching and locking provisions, and other pertinent data.

1.4 QUALITY ASSURANCE

A. Single Source Responsibility: Obtain materials for systems from either a single manufacturer or from manufacturer approved by systems manufacturer to ensure quality of appearance and performance.

B. Fire-Resistance Ratings: Appropriate UL or Warnock Hersey label required on fire rated assemblies.

C. Size Variations: Obtain Architect's acceptance of manufacturer's standard size units which may vary from sizes indicated on Drawings.

D. Coordination: Furnish inserts and anchoring devices which required to be built into other work for installation of access panels. Coordinate delivery with other work to avoid delay.

1.5 DELIVERY, STORAGE, AND HANDLING

A. Deliver, store, and handle products in accordance manufacturer’s instructions.

PART 2 - PRODUCTS

2.1 MANUFACTURERS

A. Acceptable Steel Manufacturers:
   1. J. L. Industries, Bloomington, MN.
   2. Karp Associates, Inc., Maspeth, NY.
   3. Milcor Incorporated, Lima, OH.
   4. Nystrom Products Company, Minneapolis, MN.
   5. The Williams Brothers Corporation of America, Front Royal, VA

DocuSign Envelope ID: 330DEBD6-9A9E-4F34-BDCC-1AC1BAA701E9

2.2 MATERIALS AND FABRICATION

A. Steel Assemblies: Fabricate of sheet steel complying with ASTM A1008.
   1. Fabricate with casing bead welded to perimeter of frame for assemblies installed in gypsum board surfaces.
   2. Fabricate of not less than 16 gage materials.
   3. Fabricate with exposed flange of nominal 1 inch wide around perimeter for assemblies installed in following construction:
      a. Exposed masonry or concrete.
      b. Ceramic tile.
      c. Suspended ceiling, acoustical tile.

B. Non-Rated Flush Panels: Fabricate of not less than 14 gage sheet materials. Equip with concealed spring hinges or concealed continuous piano hinge designed to open 175 degree minimum.

C. Recessed Panels:
   1. Frames:
      a. Fabricate of not less than 14 gage materials.
      b. Fabricate with casing bead welded to perimeter of frame for assemblies installed in gypsum board surfaces.
   2. Non-Rated Recessed Panels:
      a. Fabricate recessed pan of 16 gage.
      b. Factory install gypsum board flush to door surface.
      c. Equip with concealed hinges.
   3. Basis of Design: Model RDWPD, Karp Associates, Inc.
   4. Sesame KSTDW (drywall walls and ceilings), Karp.

D. Locking Devices: Provide screwdriver controlled locking device for each assembly.

2.3 FINISH

A. Steel Assemblies:
   1. Clean surfaces free of mil scale, rust, oil, grease, dirt, and other foreign materials.
   2. Phosphatize or chemically treat surfaces before application of prime coat finish.
   3. Apply rust inhibitive primer to produce uniform smooth coat at 2.0 mils minimum dry film thickness.

PART 3 - EXECUTION

3.1 EXAMINATION

A. Examine conditions and proceed with Work when substrates are ready.

B. Verify rough openings are correctly located, sized and prepared for installation.

3.2 INSTALLATION

A. Install plumb, level, square and rigidly secured in accordance with manufacturer's instructions.

B. Position for convenient access to concealed work requiring access.

3.3 ADJUSTMENTS

A. After installation, test and adjust panels and hardware for smooth operation.

END OF SECTION

DocuSign Envelope ID: 330DEBD6-9A9E-4F34-BDCC-1AC1BAA701E9

SECTION 99-084126

ALL-GLASS ENTRANCE DOORS

PART 1 - GENERAL

1.1 SUMMARY

A. Section Includes: All-glass entrance doors incorporated into curtain wall system.

B. Related Sections:
   1. Section 99-087100 - Door Hardware: Floor closers, exit devices, keyed cylinders.

1.2 SYSTEM REQUIREMENTS

A. General: In addition to requirements shown or specified, comply with design requirements of Section 99-084413 – Glazed Aluminum Curtain Walls.

B. Design and Performance Requirements:
   1. Manufacturer is responsible for designing system], including anchorage to curtain wall system and necessary modifications to meet specified requirements and maintain visual design concepts.
   2. Employ registered professional engineer, licensed to practice structural engineering in jurisdiction where Project is located, to engineer each component of entrance system.
   3. Drawings are diagrammatic and do not purport to identify nor solve problems of thermal or structural movement, glazing, anchorage, or moisture disposal.
   4. Requirements shown by details are intended to establish basic dimension of units, sight lines and profiles of members.
   5. Provide concealed fastening wherever possible.
   6. Provide all-glass entrances, including necessary modifications to meet specified requirements and maintaining visual design concepts.
   7. Attachment considerations are to take into account site peculiarities and expansion and contraction movements so there is no possibility of loosening, weakening or fracturing connection between units and curtain wall or compromising the watertight integrity of the façade system.
   8. Anchors, fasteners and braces shall be structurally stressed not more than 50 percent of allowable stress when maximum loads are applied.
   9. Provide for expansion and contraction due to structural movement without detriment to appearance or performance.
   10. System shall accommodate expansion and contraction within system components due to surface temperature range of 180 degrees F without detrimental effect to system components.
   11. Assemblies shall be free from rattles, wind whistles and noise due to thermal and structural movement and wind pressure.
   12. Comply with CPSC 16 CFR 1201 and ANSI Z97.1 for safety requirements of glazing materials.

C. Interface With Adjacent Systems:
   1. Integrate design and connections with adjacent construction.
   2. Accommodate allowable tolerances and deflections for structural members in installation.

1.3 SUBMITTALS

A. Product Data:
   1. Submit product data for entrance system.
   2. Include information for factory finishes, hardware, glass, sealants, accessories and other required components.

B. Shop Drawings:
   1. Submit shop drawings created by storefront manufacturer indicating design, fabrication, and installation of systems.

DocuSign Envelope ID: 330DEBD6-9A9E-4F34-BDCC-1AC1BAA701E9

2. Stamp shop drawings with seal and signature of professional engineer responsible for design.
3. Show anchors, joint system, expansion and contraction provisions and other components not included in manufacturer's standard data.
4. Include wall elevations, typical unit elevations and detail sections.
5. Include glazing, hardware and anchorage details.
6. Clearly indicate locations of exposed fasteners.

C. Samples:
1. Submit samples indicating quality of finish in required colors on alloys used for work, 12 inches long for extrusions and 6 inches square for sheet materials.
2. Where normal color and texture variations are expected, include additional samples to show range of such variations.
3. Submit samples for each type of glass, 12 by 12 inch size.

D. Submit following Informational Submittals:
1. Certifications specified in Quality Assurance article.
2. Qualification Data: Manufacturer's, engineer's, and installer's qualification data.
3. Manufacturer’s installation instructions.

E. Closeout Submittals:
1. Submit under provisions of Section 99-017800.
2. Warranty: Submit specified warranty.

1.4 QUALITY ASSURANCE

A. Engineer Qualifications: Registered professional engineer licensed to practice structural engineering in jurisdiction where Project is located, with minimum of 5 years experience in design of all-glass entrance systems.

B. Installer Qualifications: Certified in writing by system manufacturer as qualified for installation of specified systems.

C. Certifications:
1. Submit manufacturer's certification that products furnished for Project meet or exceed specified requirements.
2. Engineering certifications.

1.5 DELIVERY, STORAGE, AND HANDLING

A. Deliver, store, and handle products in accordance manufacturer’s instructions.

B. Protect finish surfaces as necessary to prevent damage.

C. Do not use adhesive papers which become firmly bonded when exposed to sun.

D. Do not leave coating residue on any surface.

E. Replace damaged units.

F. Deliver glass with manufacturer's labels intact. Labels are required to indicate glass thickness, unit location, glass strength and orientation of units in vertical position.

G. Protect glass edges and corners against chipping and cracking.

1.6 WARRANTY

A. Provide warranties in accordance with Section 99-017800.

B. Provide written warranty jointly signed by manufacturer, installer and Contractor warranting work to be watertight, free from defective materials and workmanship, and agreeing to replace components which fail within 5 years from date of Substantial Completion.

DocuSign Envelope ID: 330DEBD6-9A9E-4F34-BDCC-1AC1BAA701E9

PART 2 - PRODUCTS

2.1 MANUFACTURERS

A. Acceptable Manufacturers:
   1. DormaGlas
   2. Arch Aluminum and Glass LC, Tamarac, FL.
   3. Blumcraft of Pittsburgh, Division of C.R. Laurence, Los Angeles, CA.
   4. Virginia Glass Products Corporation, Martinsville, VA.

2.2 MATERIALS AND COMPONENTS

A. Type Clear Tempered Glass:
   1. Quality: ASTM C1036, Type I transparent flat, Class 1 clear, Quality q3 glazing select.
   2. Type: ASTM C1048, Kind FT fully tempered, with tongless horizontal tempering.
   3. Exposed Edges: Radius, polished smooth.
   4. Thickness: 1/2 [3/4] inch.

B. Framing Systems:
   1. Door Fittings: Top corner patch plates, full 10 inch high rail bottom rail.
   2. Profile: Square design.
   3. Metal for fittings: Extruded aluminum complying with ASTM B221, alloy 6063-T5, 0.125 inch minimum wall thickness.

C. Weatherstripping: manufacturer’s system for weathertight entrance door system.

D. Fasteners:
   1. Provide concealed fasteners wherever possible.
   2. For exposed locations, provide Phillips flathead screws with finish matching item fastened.
   3. For concealed locations, provide manufacturer's standard.

2.3 DOOR HARDWARE

A. Pivot and Floor Closer Assemblies:
   1. Acceptable Manufacturers:
      a. Dorma Door Controls, Inc., Reamstown, PA.
      b. NT Dor-O-Matic, Inc., Harwood Heights, IL.
      c. Rixson-Firemark, Inc., Franklin Park, IL.
   2. Center pivot - single acting: Rixson PH28 x 554 with 8-1/2 lbs resistance complete with 340 walking beam top pivot assembly and bottom closer arm.
   3. Required Features:
      a. Separate valves for control of closing speed and latching speed.
      b. Adjustable hydraulic or mechanical backcheck.
      c. Positive stop with non-hold open (NHO)
      d. Spindle of length to suit installation conditions.
      e. Cement case of sealed unit design at exterior locations.
      f. Cold weather hydraulic fluid at exterior locations.
      g. Equip with recessed pan where indicated in Hardware Sets.
      h. Equip with aluminum cover plate, except not required at assemblies with threshold or where recessed pan has been scheduled. Manufacturer's name, logo or other similar identification not permitted on cover plate.

B. Panic Devices:
   1. Acceptable Products:
      a. Model H-110-B by Blumcraft of Pittsburgh, Division of C.R. Laurence.
      b. DG1000, DormaGlas
   2. Push Bar and Handle: Stainless steel, 1-1/4 inch diameter.
   3. Locking Feature: Provide lock at each single exterior door and one leaf at pairs of exterior doors with provisions for keyed cylinder at exterior side only.
   4. Cylinders: Specified in Section 99-087100.

DocuSign Envelope ID: 330DEBD6-9A9E-4F34-BDCC-1AC1BAA701E9

5. Dogging Feature: Provide at each door; designed to keep latch bolt retracted for ordinary push/pull operation.
6. Mounting Height: 38 inches from finish floor to push bar centerline.
7. Finish: US32.

C. Thresholds:
1. Acceptable Product: Model 195 x 192 x 195 by Pemko, Ventura, CA.
2. Type: Extruded aluminum with mitered return ends and removable cover for access to floor closer.
3. Size: 6-3/4 inches width, 1/2 inch height.

D. Hardware Set GE1, each pair of doors shall have:
1. 2 sets pivots and floor closer assemblies.
2. 2 each panic devices.
3. 1 each threshold.

2.4 SYSTEM FINISH

A. Fluoropolymer Coating:
1. Locations: Door patch plates and bottom rails.
2. Comply with AAMA 2605, fluorosurfactant free (FSF) formulation.
3. Resin: 70 percent polyvinylidene fluoride (PVDF).
4. Substrate: Cleaned and pre-treated.
5. Color and system to match curtain wall in Section 99-084413.

B. Hardware Stainless Steel:
1. No. 4 satin [No. 8 mirror polished] finish conforming with NAAMM AMP 503.
2. Protect finish with factory applied adhesive backed paper covering.

PART 3 - EXECUTION

3.1 EXAMINATION

A. Examine conditions and proceed with work when substrates are ready.

3.2 INSTALLATION

A. Install in accordance with manufacturer’s instructions, details and approved shop drawings.

B. Erect true to line, plumb, level, square and in proper planes with other work, free from twists, sags, waves, buckles or other objectionable defects.

C. Provide anchorage to safely resist stresses to which members will normally be subjected.

D. Anchor securely in place allowing for required movement including expansion and contraction.

E. Separate dissimilar materials at contact points, including metal in contact with masonry or concrete surfaces, with bituminous paint or preformed separators to prevent contact and corrosion.

F. Glazing: Commence glass door installation at final stage of construction to avoid damage.

G. Door Edge Clearances:
1. Between doors and frame at head and jambs: 1/8 inch.
2. At sills with thresholds: 1/4 inch.
3. At meeting edges of pairs of doors: 1/8 inch.

3.3 ADJUSTING

A. Test Door Operating Functions. Adjust closing and latching speeds and other hardware in accordance with manufacturer's instructions to ensure smooth operation.

3.4 CLEANING

A. Clean surfaces in compliance with manufacturer's recommendations; remove excess mastic, mastic smears, foreign materials and other unsightly marks.

DocuSign Envelope ID: 330DEBD6-9A9E-4F34-BDCC-1AC1BAA701E9

B. Remove protective paper. Clean surfaces and polish to uniform luster. Exercise care to avoid damage of finishes.

C. Wash glass on interior and exterior to remove paint, soil, prints and foreign matter. Clean glass only with mild detergent and water following glass manufacturer's instructions. Do not use abrasive materials.

END OF SECTION

DocuSign Envelope ID: 330DEBD6-9A9E-4F34-BDCC-1AC1BAA701E9

SECTION 99-084413

GLAZED ALUMINUM CURTAIN WALLS

PART 1 - GENERAL

1.1 SUMMARY

A. Section Includes:
   1. Aluminum curtain wall systems, complete with reinforcing, shims, anchors, and attachment devices.
   2. Glass and glazing accessories.
   3. Perimeter sealants.
   4. Accessories necessary to complete Work.

B. Related Sections:
   1. Section 99-055000 - Metal Fabrications: Preparation of adjacent work to receive anchorages required for support of wall systems.
   2. Section 99-079200 - Joint Sealants: Perimeter sealants and backup materials.
   3. Section 99-084126 - All-Glass Entrance Doors.
   4. Section 99-088000 - Glazing.

1.2 SYSTEM REQUIREMENTS

A. General: In addition to requirements shown or specified, comply with:
   1. Applicable provisions of AAMA “Aluminum Curtain Wall Design Guide Manual” for design, materials, fabrication and installation of component parts.

B. Design Requirements:
   1. Manufacturer is responsible for designing system, including anchorage to structural system and necessary modifications to meet specified requirements and maintain visual design concepts.
   2. Employ registered professional engineer, licensed to practice structural engineering in jurisdiction where Project is located, to engineer each component of glazed curtain wall system.
   3. Structural silicone glazed framing system for four-sided silicone glazing of glass to aluminum back-up framing.
   4. System manufacturer shall provide curtainwall systems, including necessary modifications to meet specified requirements and maintaining visual design concepts.
   5. Fabricate glazing systems for exterior glazing installation.
   6. Perimeter conditions shall allow for installation tolerances, expansion and contraction of adjacent materials, and sealant manufacturer's recommended joint design.
   7. Drawings are diagrammatic and do not purport to identify nor solve problems of thermal or structural movement, glazing, anchorage or moisture disposal.
   8. Requirements shown by details are intended to establish basic dimension of unit, sight lines and profiles of members.
   9. Do not assume glass, sealants, and interior finishes contribute to framing member strength, stiffness, or lateral stability.
   10. Assemblies shall be free from rattles, wind whistles and noise due to thermal and structural movement and wind pressure.
   11. Attachment considerations are to take into account site peculiarities and expansion and contraction movements so there is no possibility of loosening, weakening or fracturing connection between units and building structure or between units themselves.
   12. Anchors, fasteners and braces shall be structurally stressed not more than 50 percent of allowable stress when maximum loads are applied.
   13. Allow for expansion and contraction due to structural movement without detriment to appearance or performance.

DocuSign Envelope ID: 330DEBD6-9A9E-4F34-BDCC-1AC1BAA701E9

14. System shall drain exterior face of wall, water entering joints and condensation occurring within system by drain holes and gutters of adequate size to evacuate water without infiltration to interior.
15. Provide concealed fastening wherever possible.
16. Metal faces are required to be visually flat under all lighting conditions, subject to acceptance of Architect.
17. Provide uniform color and profile appearance at components exposed to view.
18. Stresses placed on structural silicone sealants shall be kept within sealant manufacturer's recommended maximum.
19. Make modifications to meet field conditions and to ensure fitting of products.
20. Obtain Architect's approval of modification.
21. Obtain Architect's approval for connections to building elements at locations other than indicated on Drawings.
22. Accommodate building structure deflections in connections to structure.
23. Separate dissimilar metals.

C. Wind Loading:
1. Engineer typical exterior envelope to withstand 40 PSF positive and negative wind load acting normal to plane of walls or building code requirements, whichever is greater.
2. Engineer corners within 10 feet and parapet areas of exterior envelope to withstand upgraded wind requirements stipulated in ANSI 58.1, ASCE 7 and building code.

D. Thermal Requirements:
1. Thermal Movement: Provide for expansion and contraction due to structural movement and temperature changes without detriment to appearance or performance.
   a. Design for assumed temperature changes regardless of surface areas exposed to exterior and interior.
   b. Design exterior envelope to withstand movement within itself, between wall assembly and structure in deflection, warpage and racking without breakage of air or water seals.
   c. Provide joint movement capable of reacting to material temperature range of 180 degrees F.
   d. Assume entire cross section has uniform temperature.
2. For thermal design other than joint movement, design winter surface temperature shall be 99 percent dry bulb winter temperature from ASHRAE handbook.

E. Exterior Window and Curtain Wall Performance:
1. Air Infiltration of Fixed Units: Tested not to exceed 0.06 cubic foot/minute square foot in accordance with ASTM E283, at pressure differential of 6.24 PSF.
2. Water Penetration Under Static Pressure: In accordance with ASTM E331; air pressure 20 percent design wind load; 10.0 PSF minimum, no uncontrolled water penetration allowed.
3. Water Penetration Under Dynamic Pressure: In accordance with AAMA 501.1; air pressure 20 percent design wind load; 10.0 PSF minimum, no uncontrolled water penetration allowed.

F. Structural Requirements:
1. Deflection Under Uniform Loading: When tested in accordance with ASTM E330 at design pressure, maximum deflection of exterior member shall not exceed L/175 or 3/4 inch maximum for spans under 13’-6” and L/240 plus 1/4 inch for spans 13’-6” or greater.
2. Compression flanges of flexural members may be assumed to receive effective lateral bracing only from:
   a. Anchors to building structure.
   b. Horizontal glazing rails or interior trim which are in actual contact with compression flange.
3. Do not regard points of contraflexture as lateral braces or as end points of unbraced length; unbraced length is actual distance between effective lateral braces as defined above.
4. Where framing member reaction is resisted by continuous element, maximum assumed effective length of the resisting element is 4 times bearing length, but not more than 12 inches.

DocuSign Envelope ID: 330DEBD6-9A9E-4F34-BDCC-1AC1BAA701E9

G. Glazing Requirements:
   1. Comply with CPSC 16 CFR 1201 and ANSI Z97.1 for safety requirements of glazing materials.
   2. Glass thickness, where indicated, are minimum requirements and are to be confirmed by glass manufacturer.
   3. Provide glass of thickness and heat treatment (annealed, heat strengthened or fully tempered) as necessary to prevent temperature stress breakage.
   4. Use 2.5 safety factor of glass to statistical probability of failure (8 lites/1000).

H. Structural Silicone Assembly Performance:
   1. Ensure structural silicone has ultimate strength which provides minimum safety factor of 3 compared to applied loads.
   2. Ensure allowable tension and shear stress in structural silicone does not exceed 20 psi, or less if required by sealant manufacturer or by structural silicone substrate tests. A 1/3 increase for wind and seismic load is not permitted.
   3. Force per linear inch generated by 3 times applied load must be transmitted without failure of paint films, insulated glass edge seals, glass coatings, and other elements in line of stress. Dead weight of vertical glass to be carried by structural silicone.
   4. Adhere structural silicone to specially prepared surfaces and verify minimum safety factor by adhesion tests.
   5. Do not adhere structural silicone to mill finish aluminum surfaces.

I. Interface With Adjacent Systems:
   1. Instruct other trades of proper location and position of structural connections.
   2. Furnish setting drawings, diagrams, templates and installation instructions.
   3. Integrate design and connections with adjacent construction.
   4. Accommodate allowable tolerances and deflections for structural members in installation.

1.3 SUBMITTALS

A. Product Data:
   1. Submit product data for each manufactured product.
   2. Include information for factory finishes, glass, glazing sealants, perimeter sealants, accessories and other required components.

B. Shop Drawings:
   1. Stamp shop drawings with seal and signature of professional engineer responsible for design.
   2. Submit drawings created by curtain wall manufacturer indicating elevations, detailed design, dimensions, member profiles, joint locations, arrangement of units, member connections, and thickness of various components.
   3. Show following Items:
      a. Details of special shapes.
      b. Reinforcing.
      c. Drainage details and flow diagrams.
      d. Anchorage system.
      e. Interfacing with building construction.
      f. Provisions for expansion and contraction.
   4. Indicate glazing details, methods, locations of various types and thickness of glass, and internal sealant requirements.
   5. Clearly indicate locations of exposed fasteners and joints for Architect's acceptance.
   6. Clearly show where and how manufacturer's system deviates from Contract Drawings and these Specifications.

C. Samples:
   1. Submit samples indicating quality of finish in required colors on alloys used for work, 12 inches long for extrusions and 6 inches square for sheet materials.
   2. Where normal texture or color variations are expected, include additional samples illustrating range of variation.

DocuSign Envelope ID: 330DEBD6-9A9E-4F34-BDCC-1AC1BAA701E9

D. Submit following Informational Submittals:
   1. Test Reports: Submit certified copies of previous tests reports by independent laboratory substantiating performance of system. Include other supportive data as necessary.
   2. Support reactions design data.
   3. Certifications specified in Quality Assurance article.
   4. Qualification Data: Engineer's and installer's qualification data.
   5. Manufacturer's installation instructions. Include detailed instructions describing each step of reglazing procedures.

E. Closeout Submittals:
   1. Submit under provisions of Section 99-017800.
   2. Warranty: Submit specified warranty.

1.4 QUALITY ASSURANCE

A. Single Source Responsibility:
   1. Provide window systems that are products of a single manufacturer.
   2. Glass, glazing, and perimeter sealants for curtain wall systems are required as Work of this Section for single source responsibility.

B. Engineer Qualifications: Registered professional engineer licensed to practice structural engineering in jurisdiction where Project is located, with minimum of 5 years experience in design of glazed curtain wall systems.

C. Installer Qualifications: Certified in writing by system manufacturer as qualified for specified systems.

D. Certifications:
   1. Submit manufacturer's certification that products furnished for Project meet or exceed specified requirements.
   2. Submit manufacturer's certification stating that installed system is in compliance with specified requirements.
   3. Submit coating manufacturer's certification stating fluoropolymer coating formulation is fluorosurfactant complying formulation.
   4. Engineering certifications. Include statement attesting components, including frames and glass, will withstand design wind loads and that maximum allowable deflections will not be exceeded.
   5. Submit certification stating compatibility of insulating glass sealant with silicone glazing sealant.
   6. Submit certification stating acceptance of installation procedures signed by glass manufacturer, sealant manufacturer, and systems manufacturer.

1.5 PREINSTALLATION CONFERENCE

A. Conduct preinstallation conference.

B. Conference Purpose and Agenda:
   1. Arrange with Architect and representatives of window and sealant manufacturer to visit Project site before beginning glazing operations to analyze site conditions, and inspect surfaces and joints to be sealed in order that recommendations may be made should adverse conditions exist.
   2. Discuss following Items:
      a. Weather conditions under which work will be done.
      b. Anticipated frequency and extent of joint movement.
      c. Joint design.
      d. Glazing procedures.

1.6 DELIVERY, STORAGE, AND HANDLING

A. Deliver, store, and handle products in accordance manufacturer’s instructions.

B. Protect finished surfaces to prevent damage.

DocuSign Envelope ID: 330DEBD6-9A9E-4F34-BDCC-1AC1BAA701E9

C. Do not use adhesive papers or sprayed coatings which become firmly bonded when exposed to sun.

D. Do not leave coating residue on surfaces.

E. Deliver glass units with manufacturer's labels intact on interior side of glass. Ensure labels indicate glass thickness, unit location, glass strength and orientation of units in vertical position.

F. Protect glass edges and corners to prevent chipping, cracking, and other similar damages.

1.7 PROJECT CONDITIONS

A. Ensure ambient and surface temperatures and joint conditions are suitable for installation of materials.

1.8 WARRANTY

A. Provide written warranty in form acceptable to Owner jointly signed by manufacturer, installer and Contractor warranting work to be watertight, free from deflective materials, defective workmanship, glass breakage due to defective design, and agreeing to replace components which fail within 5 years from date of Substantial Completion.

B. Warranty shall cover following:
   1. Complete watertight and airtight system installation within specified tolerances.
   2. Completed installation will remain free from rattles, wind whistles and noise due to thermal and structural movement and wind pressure.
   3. Curtain wall system is structurally sound and free from distortion.
   4. Glass and glazing gaskets will not break or "pop" from frames due to design wind, expansion or contraction movement or structural loading.
   5. Glazing sealants and gaskets will remain free from abnormal deterioration or dislocation due to sunlight, weather or oxidation.
   6. Replacement of tempered glass which break due to nickel sulfide inclusions; includes materials and labor.

C. Provide written warranty stating fluoropolymer (PVDF) coating finish will be free from fading more than 10 percent, chalking, yellowing, peeling, cracking, pitting, corroding or non-uniformity of color, or gloss deterioration beyond manufacturer's descriptive standards for 10 years from date of Substantial Completion and agreeing to promptly correct defects.

PART 2 - PRODUCTS

2.1 MANUFACTURERS

A. Acceptable Standard Curtain Wall Manufacturers:
   1. Arcadia, Vernon, CA
   2. EFCO Corporation, Monett, MO.
   3. Kawneer Company, Inc., Norcross, GA.
   4. Oldcastle Building Envelope, Santa Monica, CA.
   5. Wausau Window and Wall Systems, Wausau, WI.

B. Basis of Design System: T500 OPG3000 Silicone System, Arcadia.

2.2 FRAMING MATERIALS AND ACCESSORIES

A. Aluminum:
   1. ASTM B221, alloy 6063-T5 for extrusions; ASTM B209, alloy 5005-H16 for sheets; or other alloys and temper recommended by manufacturer appropriate for specified finish.
   2. Minimum thickness of 0.125 inch for framing members and 0.050 inch for glazing stops and similar components.
   3. Provide aluminum with 20% minimum post-consumer recycled content.

B. Internal Reinforcing:
   1. ASTM A36 for carbon steel; or ASTM B308 for structural aluminum.
   2. Shapes and sizes to suit installation.

DocuSign Envelope ID: 330DEBD6-9A9E-4F34-BDCC-1AC1BAA701E9

3. Shop coat steel components after fabrication with alkyd type zinc chromate primer complying with FS TT-P-645.

C. Inserts and Anchorage Devices:
1. Manufacturer's standard formed or fabricated assemblies, steel or aluminum, of shapes, plates, bars or tubes.
2. Hot-dip galvanize steel assemblies after fabrication, comply with ASTM A123, 2.0 ounce minimum coating.

D. Fasteners:
1. Non-magnetic stainless steel or cadmium plated steel coated with yellow or silver iridescent plating, compatible with materials being fastened.
2. Series 300 stainless steel for exposed locations. Cadmium plated steel with 0.0005 inch plating thickness and color chromate coated for concealed locations.
3. Provide nuts or washers of design having means to prevent disengagement; deforming of fastener threads is not acceptable.
4. Provide concealed fasteners wherever possible.

E. For exposed locations, provide countersunk flathead fasteners with finish matching item fastened.

F. Self-Drilling, Self-tapping Fasteners: Elco Dril-Flex with Stalgard Finish; no substitutions.

G. Shims: Non-staining, non-ferrous, type as recommended by system manufacturer.

H. Protective Coatings: Cold applied asphalt mastic complying with SSPC-Paint 12, compounded for 30 mil thickness for each coat; or alkyd type zinc chromate primer complying with FS TT-P-645.

I. Weep Hole Baffles: Open cell polyurethane foam sized to install at 30 percent minimum compression.

J. Internal Sealants: Types recommended by system manufacturer to remain permanently elastic, tacky, non-drying, non-migrating and weathertight.

K. Perimeter Sealants and Accessories:
1. Type: Silicone—General Purpose complying with requirements of Section 99-079200.
2. Colors: As selected by Architect from full range of manufacturer's standard colors.
3. Primer: Comply with requirements of Section 99-079200.
4. Sealant Backing Bond Breaker Rod and Tape: Comply with requirements of Section 99-079200.

2.3 GLASS AND GLAZING ACCESSORIES

A. Refer to Section 99-088000 for Glass.

B. Setting Blocks:
1. Type: Meet requirements of ASTM C864, preformed silicone compatible with glazing sealants and seals of insulating glass.
2. Hardness: 80-90 Shore "A" durometer.
3. Size: Length equal to 0.1 inch for each square foot of glass, but not less than 4 inch by width 1/16 inch less than channel by sufficient height to provide minimum edge clearance of glass.

C. Edge (Anti-Walk) Blocks:
1. Type: Meet requirements of ASTM C864, preformed silicone compatible with glazing sealants and seals of insulating glass.
2. Hardness: 60-70 Shore "A" durometer.
3. Size: Minimum 4 inch length by width to support thickness of glass, allow nominal 1/8 inch clearance between edge of glass and block.

D. Spacers (Shims):
1. Type: Meet requirements of ASTM C864, preformed silicone compatible with glazing sealants, self-adhesive one face.
2. Hardness: 50-60 Shore "A" durometer.
3. Size: Minimum 3 inch length by one-half height of glazing stop by thickness to suit application.

DocuSign Envelope ID: 330DEBD6-9A9E-4F34-BDCC-1AC1BAA701E9

E. Continuous Spacer Gaskets: Preformed silicone, Shore A hardness and size recommended by structural glazing sealant manufacturer.

F. Glazing Sealants:
   1. Type: Silicone, one-part, neutral cure, conforming to ASTM C920, Type S, Grade NS.
   2. Colors: As selected by Architect from full range of manufacturer's standard colors.
   3. Primer: When required by sealant manufacturer, type as recommended.
   4. Acceptable products (glass to glass weather seal):
      a. 795 Silicone Building and Glazing Sealant, Dow Corning Corporation, Midland, MI.
      b. Silglaze II, General Electric Silicones, Waterford, NY.
   5. Acceptable products (glass to metal structural adhesion):
      a. 995 Silicone Building Sealant, Dow Corning Corporation, Midland, MI.
      b. Ultraglaze SSG 4400 Silicone Structural Glazing Adhesive, General Electric Silicones, Waterford, NY.

2.4 SYSTEM FABRICATION

A. Take accurate field measurements to verify required dimensions prior to fabrication.

B. Fabricate components in accord with approved shop drawings. Fabricate system using previously tested components the meet or exceed performance requirements specified this Section. Remove burrs and ease edges. Shop fabricate to greatest extent practicable to minimize field cutting, splicing, and assembly. Disassemble only to extent necessary for shipping and handling limitations.

C. Location of exposed joints are subject to Architect's acceptance.

D. Welding:
   1. Comply with recommendations of American Welding Society.
   2. Performed by AWS qualified welders using recommended electrodes and methods to avoid distortion and discoloration.
   3. Grind exposed welds smooth and flush with adjacent surfaces before finishing; restore mechanical finish.

E. Steel Components:
   1. Clean surfaces after fabrication and immediately prior to application of primer in accord with SSPC-SP2 or SSPC-SP3 at manufacturer's option.
   2. Apply specified shop coat primer in accord with manufacturer's instructions to provide 2.0 mil minimum dry film thickness.

F. Fabricate components true to detail and free from defects impairing appearance, strength or durability. Fabricate custom extrusions indicated and as necessary for complete installation.

G. Fabricate components to allow for accurate and rigid fit of joints and corners. Match components carefully ensuring continuity of line and design. Ensure joints and connections will be flush and weathertight. Ensure slip joints make full, tight contact and are weathertight.

H. Fabricate components true to detail and free from defects impairing appearance, strength or durability. Fabricate custom extrusions, closures, indicated and as necessary for complete installation. Include provisions for thermal-breaks.

I. Reinforce components at anchorage and support points, at joints, and at attachment points for interfacing work.

J. Provide structural reinforcing within framing members where required to maintain rigidity and accommodate design loads.

K. Provide holes or slots, deflector plates, internal flashings, and sealants to accommodate internal weep and drainage system.

L. Head and sill extrusions act as gutter and weep water to exterior; do not penetrate sections with fasteners.

M. Allow for adequate clearance around perimeter of system to enable proper installation and for thermal movement within system.

DocuSign Envelope ID: 330DEBD6-9A9E-4F34-BDCC-1AC1BAA701E9

N. Separate dissimilar metals with protective coating or preformed separators to prevent contact and corrosion.

O. Fabricate window stool, jamb and head extensions with gypsum board receivers and mating tabs to fit window extrusions with tight fit hairline joints.

2.5 FINISH

A. Fluoropolymer Coating:
   1. Comply with AAMA 2605, fluorosurfactant complying formulation.
   2. Resin: 70 percent polyvinylidene fluoride (PVDF).
   3. Substrate: Cleaned and pre-treated.
   4. Primer:
      a. Manufacturer's standard resin based compatible coating.
      b. Dry Film Thickness:
         1) Extrusion: Minimum 0.20 mil.
         2) Coil: Minimum 0.80 mil.
   5. Metallic Color coat:
      a. Coating: PVDF.
      b. Dry Film Thickness:
         1) Coil: 0.80 mil.
         2) Extrusion: 1.0 mil.
   6. Clear coat:
      a. Coating: PVDF.
      b. Dry Film Thickness:
         1) Coil: 0.50 mil.
         2) Extrusion: 0.40 mil.
   7. Color: Refer to Finish Schedule on Drawing Sheet A-500.

PART 3 - EXECUTION

3.1 EXAMINATION

A. Examine conditions and proceed with work when substrates are ready.

B. Verify dimensions, tolerances, and method of attachment with other Work.

3.2 INSTALLATION

A. Install in accordance with manufacturer's instructions and applicable provisions of AAMA Aluminum Curtain Wall Design Guide Manual.

B. Align assemblies plumb and level, free of warp or twist, aligning with adjacent Work.

C. Tolerances:
   1. Limit Variations from Plumb and Level:
      a. 1/8 inch in 20'-0" vertically and horizontally.
      b. 1/4 inch in 40'-0" either direction.
   2. Limit Offsets in Theoretical End-To-End and Edge-To-Edge Alignment:
      a. 1/16 inch where surfaces are flush or less than 1/2 inch out of flush and separated by not more than 2 inches.
      b. 1/8 inch for surfaces separated by more than 2 inches.
   3. Step In Face: 1/16 inch maximum.
   4. Jog In Alignment: 1/16 inch maximum.
   5. Location: 1/4 inch maximum deviation of any member at any location.
   6. Tolerances are not accumulative.

D. Provide attachments and shims to permanently fasten system to building structure.

E. Anchor securely in place, allowing for required movement, including expansion and contraction.

DocuSign Envelope ID: 330DEBD6-9A9E-4F34-BDCC-1AC1BAA701E9

F. Separate dissimilar materials at contract points, including metal in contact with masonry or concrete surfaces, with protective coating or preformed separators to prevent contact and corrosion.

G. Set sill members in bed of sealant. Set other members with internal sealants and baffles to provide weathertight construction.

H. Glazing:
   1. Install glazing gaskets and sealants in accordance with manufacturer's instructions without exception, including surface preparations.
   2. Ensure bonding surfaces are sound, clean, dry and free of contamination which would affect bonding strength.
   3. Clean glass edges and surfaces in contact with glazing sealant with cleaner recommended by manufacturer.
   4. Provide setting blocks, edge blocks, and spacers of proper size to support and hold glass in position independent of glazing gaskets. Comply with placement recommendations of GANA Glazing Manual.
   5. Arrange setting blocks, edge blocks and spacers to avoid blocking water transfer inside frames.
   6. Set glass properly centered with uniform bite, face clearance and edge clearance, free from twist, warp or other distortion likely to develop stress.
   7. Handle and install glass in accordance with manufacturer's directions.
   8. Prevent nicks, abrasion and other damage likely to develop stress on edges.
   9. Do not field cut tempered or insulating glass.
   10. Mask areas adjacent to joints if necessary to obtain neat sealant line.
   11. Tool sealant concave and promptly remove masking tape.
   12. Clean excess sealant from adjacent surfaces while in uncured stage with recommended solvent.

I. Sealants and Accessories:
   1. Provide perimeter sealant and backing materials between assemblies and adjacent construction; install in accordance with requirements of Section 99-079200.
   2. Seal locations necessary to create and secure continuous enclosure even though Drawings may not indicate all locations.
   3. Seal joints to prevent migration of water vapor or air to interior of building.
   4. Install double seals; exterior deterrent seal and interior vapor and air seal where curtain wall terminates against adjacent construction.

3.3 FIELD QUALITY CONTROL

A. Hose Test: Perform field check for water leakage on actual building, AAMA 501.2.
   1. No water leakage allowed, as defined in this Section.
   2. Areas to be tested and number of tests will be determined by Owner.
   3. Provide scaffold, hose, and water supply to perform tests, plus repeat unsuccessful tests after remedial work.
   4. Ensure remedial measures maintain standards of quality and durability of original design. Remedial measures are subject to approval of Architect.

3.4 CLEANING

A. Clean surfaces in compliance with manufacturer's recommendations; remove excess mastic, mastic smears, and other foreign materials.

B. Clean metal surfaces exercising care to avoid damage.

C. Remove adhered matter and excess sealant materials.

DocuSign Envelope ID: 330DEBD6-9A9E-4F34-BDCC-1AC1BAA701E9

D. Replace glass which is broken, cracked, chipped, scratched, abraded or damaged in other ways.

E. Wash glass on interior and exterior to remove paint, soil, prints and foreign matter. Clean glass only with mild detergent and water following glass manufacturer's instructions. Do not use abrasive materials.

END OF SECTION

DocuSign Envelope ID: 330DEBD6-9A9E-4F34-BDCC-1AC1BAA701E9

SECTION 99-087100

DOOR HARDWARE

PART 1 - GENERAL

1.1 RELATED DOCUMENTS

A. Drawings and general provisions of Contract, including General and Supplementary Conditions of Parts 1 through 7 of the Special Provisions Sections, apply to this Section.

1.2 SUMMARY

A. This Section includes items known commercially as finish or door hardware that are required for swing, sliding, and folding doors, except special types of unique hardware specified in the same sections as the doors and door frames on which they are installed.

B. This Section includes the following, but is not necessarily limited to:
   1. Door Hardware, including electric hardware.
   2. Storefront and Entrance door hardware.
   3. Power supplies for electric hardware.
   4. Low-energy door operators plus sensors and actuators.
   5. Thresholds, gasketing and weather-stripping.
   6. Door silencers or mutes.

C. Related Sections: The following sections are noted as containing requirements that relate to this Section, but may not be limited to this listing.
   1. Division 8: Section - Steel Doors and Frames.
   2. Division 8: Section - Wood Doors.
   3. Division 8: Section - Aluminum Storefront
   4. Division 28: Section - Fire/Life-Safety Systems & Security Access Systems.

1.3 REFERENCES (Use date of standard in effect as of Bid date.)

A. 2013 California Building Code, CCR, Title 24.

B. BHMA - Builders' Hardware Manufacturers Association.

C. DHI - Door and Hardware Institute.

D. NFPA - National Fire Protection Association.
   1. NFPA 80 - Fire Doors and Other Opening Protectives
   2. NFPA 105 - Smoke and Draft Control Door Assemblies

E. UL - Underwriters Laboratories.
   1. UL 10C - Fire Tests of Door Assemblies
   2. UL 305 - Panic Hardware

F. WHI - Warnock Hersey Incorporated

G. SDI - Steel Door Institute

1.4 SUBMITTALS & SUBSTITUTIONS

A. General: Submit in accordance with Conditions of the Contract and Parts 1 through 7 of the Special Provisions Sections.

B. Submit product data (catalog cuts) including manufacturers' technical product information for each item of door hardware, installation instructions, maintenance of operating parts and finish, and other information necessary to show compliance with requirements.

DocuSign Envelope ID: 330DEBD6-9A9E-4F34-BDCC-1AC1BAA701E9

C. Submit six (6) copies of schedule organized vertically into “Hardware Sets” with index of doors and headings, indicating complete designations of every item required for each door or opening. Include following information:
   1. Include a Cover Sheet with;
      a. Job Name, location, telephone number.
      b. Architects name, location and telephone number.
      c. Contractors name, location, telephone number and job number.
      d. Suppliers name, location, telephone number and job number.
      e. Hardware consultant's name, location and telephone number.
   2. Job Index information included;
      a. Numerical door number index including; door number, hardware heading number and page number.
      b. Complete keying information (referred to DHI hand-book "Keying Systems and Nomenclature"). Provision should be made in the schedule to provide keying information when available; if it is not available at the time the preliminary schedule is submitted.
      c. Manufacturers' names and abbreviations for all materials.
      d. Explanation of abbreviations, symbols, and codes used in the schedule.
      e. Mounting locations for hardware.
      f. Clarification statements or questions.
      g. Catalog cuts and manufacturer’s technical data and instructions.
   3. Vertical schedule format sample:

Heading Number 1 (Hardware group or set number – HW -1)						
			(a) 1 Single Door #1 - Exterior from Corridor 101		(b)90°	(c) RH
				(d) 3' 0"x7' 0" x 1-3/4" x (e) 20 Minute (f) WD x HM		
(g) 1	(h)	(i) ea		(j) Hinges - (k) 5BB1HW 4.5 x 4.5 NRP (l) ½ TMS	(m) 626	(n) IVE
2	6AA	1 ea		Lockset - ND50PD x RHO x RH x 10-025 x JTMS	626	SCH

(a) - Single or pair with opening number and location. (b) - Degree of opening (c) - Hand of door(s) (d) - Door and frame dimensions and door thickness. (e) - Label requirements if any. (f) - Door by frame material. (g) - (Optional) Hardware item line #. (h) - Keyset Symbol. (i) - Quantity. (j) - Product description. (k) - Product Number. (l) - Fastenings and other pertinent information. (m) - Hardware finish codes per ANSI A156.18. (n) - Manufacture abbreviation.

D. Make substitution requests in accordance with Parts 1 through 7 of the Special Provisions Sections. Substitution requests must be made prior to bid date. Include product data and indicate benefit to the project. Furnish samples of any proposed substitution.

E. Keying Schedule: Submit separate detailed schedule indicating clearly how the Owner's final instructions on keying of locks has been fulfilled.

F. Templates for doors, frames, and other work specified to be factory prepared for the installation of door hardware. Check shop drawings of other work to confirm that adequate provisions are made for locating and installing door hardware to comply with indicated requirements.

G. Furnish as-built/as-installed schedule with close-out documents, including keying schedule and transcript, wiring/riser diagrams, manufacturers’ installation and adjustment and maintenance information.

H. LEED Certification Points: Submit information and certifications necessary to achieve maximum points for LEED certification; coordinate and cooperate with Owner and Architect in providing information necessary for required LEED rating.

1.5 QUALITY ASSURANCE

DocuSign Envelope ID: 330DEBD6-9A9E-4F34-BDCC-1AC1BAA701E9

A. Obtain each type of hardware (latch and lock sets, hinges, closers, exit devices, etc.) from a single manufacturer.

B. Supplier Qualifications: A recognized architectural door hardware supplier, with warehousing facilities in the project's vicinity, that has a record of successful in-service performance for supplying door hardware similar in quantity, type, and quality to that indicated for this project and that employs an experienced architectural hardware consultant (AHC) who is available to Owner, Architect, and Contractor, at reasonable times during the course of the Work, for consultation.
   1. Responsible for detailing, scheduling and ordering of finish hardware.
   2. Meet with Owner to finalize keying requirements and to obtain final instructions in writing.
   3. Stock parts for products supplied and are capable of repairing and replacing hardware items found defective within warranty periods.

C. Hardware Installer: Company specializing in the installation of commercial door hardware with five years documented experience.

D. Fire-Rated Openings: Provide door hardware for fire-rated openings that complies with NFPA Standard No. 80 and requirements of authorities having jurisdiction. Provide only items of door hardware that are listed and tested by UL or Warnock Hersey for given type/size opening and degree of label. Provide proper latching hardware, door closers, approved-bearing hinges and seals whether listed in the Hardware Schedule or not.
   1. Where emergency exit devices are required on fire-rated doors, (with supplementary marking on doors' UL labels indicating "Fire Door to be Equipped with Fire Exit Hardware") provide UL label on exit devices indicating "Fire Exit Hardware".

E. Exit Doors: Operable from inside with single motion without the use of a key or special knowledge or effort.

1.6 DELIVERY, STORAGE AND HANDLING

A. Coordinate delivery of packaged hardware items to the appropriate locations (shop or field) for installation.

B. Hardware items shall be individually packaged in manufacturers' original containers, complete with proper fasteners. Clearly mark packages on outside to indicate contents and locations in hardware schedule and in work.

C. Provide locked storage area for hardware, protect from moisture, sunlight, paint, chemicals, etc.

D. Inventory door hardware jointly with representatives of hardware supplier and hardware installer until each is satisfied that count is correct.

1.7 WARRANTY

A. Provide warranties of respective manufacturers' regular terms of sale from day of final acceptance as follows:
   1. Locksets: Three (3) years.
   2. Closers: Thirty (30) years, except electronic closers shall be two (2) years.
   3. Exit devices: Three (3) years.
   4. All other hardware: Two (2) years.

DocuSign Envelope ID: 330DEBD6-9A9E-4F34-BDCC-1AC1BAA701E9

1.8 MAINTENANCE

A. Maintenance Tools and Instructions: Furnish a complete set of specialized tools and maintenance instructions as needed for Owner's continued adjustment, maintenance, and removal and replacement of door hardware.

1.9 PRE-INSTALLATION CONFERENCE

A. Convene a pre-installation conference at least one week prior to beginning work of this section.

B. Attendance: Architect, Construction Manager, Contractor, Security Contractor, Hardware Supplier, Installer, and Project Inspector.

C. Agenda: Review hardware schedule, products, installation procedures and coordination required with related work.

PART 2 - PRODUCTS

2.1 MANUFACTURERS

	Item	Manufacturer	Acceptable Substitutes
A.	Hinges	Ives	Hager, Stanley, McKinney
B.	Locks, Latches & Cylinders	Schlage	Or Approved Equal
C.	Exit Devices	Von Duprin	Or Approved Equal
D.	Closers	LCN	Or Approved Equal
E.	Push, Pulls & Protection Plates	Ives	Trimco, BBW, DCI
F.	Flush Bolts	Ives	Trimco, BBW, DCI
G.	Dust Proof Strikes	Ives	Trimco, BBW, DCI
H.	Coordinators	Ives	Trimco, BBW, DCI
I.	Stops	Ives	Trimco, BBW, DCI
J.	Overhead Stops	Glynn-Johnson	Or Approved Equal
K.	Thresholds	National Guard	Pemko, Zero
L.	Seals & Bottoms	National Guard	Pemko, Zero

2.2 MATERIALS

A. Hinges: Exterior out-swinging door butts shall be non-ferrous material and shall have stainless steel hinge pins. All doors to have non-rising pins.
   1. Hinges shall be sized in accordance with the following:
      a. Height:
         1) Doors up to 41" wide: 4-1/2" inches.
         2) Doors 42" to 48" wide: 5 inches.
      b. Width: Sufficient to clear frame and trim when door swings 180 degrees.
      c. Number of Hinges: Furnish 3 hinges per leaf to 7'-5" in height. Add one for each additional 2 feet in height.
   2. Furnish non-removable pins (NRP) at all exterior out-swing doors and interior key lock doors with reverse bevels.

B. Floor Closers: Shall be equipped with compression springs, cam and roller operating mechanism and a one piece spindle-cam for maximum operating performance and longevity.

C. Extra Heavy duty Commercial Mortise Locks: Schlage “L” Series as scheduled with “06” Style Lever and “A” Style Rose.

DocuSign Envelope ID: 330DEBD6-9A9E-4F34-BDCC-1AC1BAA701E9

1. Locksets to comply with ANSI A156.13, Series 1000, Operational Grade 1 and Security Grade 1 with all standard trims. Locksets shall also comply with UL10C Positive Pressure requirements
2. Lock case shall be manufactured with heavy 12 gauge steel with fully wrapped design. Lock cases with exposed edges are not acceptable. Lock case shall be multi-functional allowing transformation to a different function without opening lock case.
3. Latchbolt shall have ¾" throw and be non-handed, field reversible without opening the lock case. Solid latchbolts and / or plastic anti-friction devices are not acceptable.
4. The deadbolt, when used, shall be 1" throw stainless steel with a ¾" internal engagement when fully extended.
5. All trim shall be through-bolted with the spring cages supporting the trim attached to the lock cases to prevent torquing.
6. Levers to have independent rotation in both directions. Exterior lever assembly to be one-piece design attached by threaded bushing. Interior lever assembly shall be attached by screwless shank
7. Thru-bolt lever assemblies through the door for positive interlock. Locks using a through the door spindle for attachment are not acceptable. Spindles shall be independent, designed to "break-away" at a maximum of 75psi torque.
8. Hand of lock chassis to be changeable by simply moving one screw from one side to the case to the other and pulling and reversing the latchbolt.
9. Cylinders to be secured by a cast stainless steel, dual retainer. Locks utilizing screws and / or stamped retainers are not acceptable.

D. Closers: LCN as scheduled. Place closers inside building, stairs, room, etc.

1. Door closer cylinders shall be of high strength cast iron construction with double heat treated pinion shaft to provide low wear operating capabilities of internal parts throughout the life of the installation. All door closers shall be tested to ANSI/BHMA A156.4 test requirements by a BHMA certified testing laboratory. A written certification showing successful completion of a minimum of 10,000,000 cycles must be provided.
2. All door closers shall be fully hydraulic and have full rack and pinion action with a shaft diameter of a minimum of 11/16 inch and piston diameter of 1 inch to ensure longevity and durability under all closer applications.
3. All parallel arm closers shall incorporate one piece solid forged steel arms with bronze bushings. 1-9/16" steel stud shoulder bolts, shall be incorporated in regular arms, hold-open arms, arms with hold open and stop built in. All other closers to have forged steel main arms for strength, durability, and aesthetics for versatility of trim accommodation, high strength and long life.
4. Closers shall be installed to permit doors to swing 180 degrees.
5. All closers shall utilize a stable fluid withstanding temperature range of 120 degrees F. to -30 degrees F. without requiring seasonal adjustment of closer speed to properly close the door.
6. Provide the manufactures drop plates, brackets and spacers as required at narrow head rails and special frame conditions. NO wood plates or spacers will be allowed.
7. Maximum effort to operate closers shall not exceed 5 lbs., such pull or push effort being applied at right angles to hinged doors. Compensating devices or automatic door operators may be utilized to meet the above standards. When fire doors are required, the maximum effort to operate the closer may be increased but shall not exceed 15 lbs. when specifically approved by fire marshal. All closers shall be adjusted to operate with the minimum amount of opening force and still close and latch the door. These forces do not apply to the force required to retract latch bolts or disengage other devices that hold the door in a closed position. Door shall take at least 3 seconds to move from an open position of 70 degrees to a point of 3 inches from the latch jamb. Reference CBC Sections 1008.1.9 and 11B-404.2.7; 11B – 404.2.9; and 11B-404.2.8.1.
8. Provide sex-bolted or through bolt mounting for all door closers.

DocuSign Envelope ID: 330DEBD6-9A9E-4F34-BDCC-1AC1BAA701E9

E. Flush Bolts & Dust Proof Strikes: Automatic Flush Bolts shall be of the low operating force design. Utilize the top bolt only model for interior doors where applicable and as permitted by testing procedures.
   1. Manual flush bolts only permitted on storage or mechanical openings as scheduled.
   2. Provide dust proof strikes at openings using bottom bolts.

G. Door Stops:
   1. Unless otherwise noted in Hardware Sets, provide wall type with appropriate fasteners. Where wall type cannot be used, provide floor type. If neither can be used, provide overhead type.
   2. Do not install floor stops more than four (4) inches from the face of the wall or partition (CBC Section 11B-204 and 11B-404.2.5).
   3. Overhead stops shall be made of stainless steel and non-plastic mechanisms and finished metal end caps. Field-changeable hold-open, friction and stop-only functions.

H. Protection Plates: Fabricate either kick, armor, or mop plates with four beveled edges. Provide kick plates 10" high and 2" LDW. Sizes of armor and mop plates shall be listed in the Hardware Schedule. Furnish with machine or wood screws of bronze or stainless to match other hardware.

I. Thresholds: As Scheduled and per details.
   1. Thresholds shall not exceed 1/2" in height, with a beveled surface of 1:2 maximum slope.
   2. Set thresholds in a full bed of butyl-rubber or polyisobutylene mastic sealant complying with requirements in Division 7 “Thermal and Moisture Protection”.
   3. Use ¼” fasteners, red-head flat-head sleeve anchors (SS/FHSL).
   4. Thresholds shall comply with CBC Section 11B-404.2.5.

J. Seals: Provide silicone gasket at all rated and exterior doors.
   1. Fire-rated Doors, Resilient Seals: UL10C Classified, Category “J” listed seals complying with NFPA 80 & NFPA 252 Standards. Coordinate with selected door manufacturers' and selected frame manufacturers' requirements.
   2. Fire-rated Doors, Intumescent Seals: Furnished by selected door manufacturer. Category “G” furnish fire-labeled opening assembly complete and in full compliance with NFPA 252. Where required, intumescent seals vary in requirement by door type and door manufacture -- careful coordination required.
   3. Smoke & Draft Control Doors, Provide Category “H” listed seals complying with NFPA 105 for use on “S” labeled Positive Pressure door assemblies.

K. Door Shoes & Door Top Caps: Provide door shoes at all exterior wood doors and top caps at all exterior out-swing doors.

L. Silencers: Furnish silencers for interior hollow metal frames, 3 for single doors, 2 for pairs of doors. Omit where sound or light seals occurs, or for fire-resistive-rated door assemblies.

DocuSign Envelope ID: 330DEBD6-9A9E-4F34-BDCC-1AC1BAA701E9

2.3 KEYING

A. Furnish a masterkey system as directed by the owner or architect.

B. A detailed keying schedule is to be prepared by the owner and/or architect in consultation with a representative of the lock manufacturer. Each keyed cylinder on every keyed lock is to be listed separately showing the door #, key group (in BHMA terminology), cylinder type, finish and location on the door.

C. Establish a new masterkey system for this project as directed by the keying schedule.

D. Furnish all cylinders in the Schlage Full Size Interchangable Core (FSIC). Pack change keys independently (PKI)

E. Furnish construction keying for doors requiring locking during construction.

F. Furnish mechanical keys as follows:
   1. Furnish 2 cut change keys for each different change key code.
   2. Furnish 1 uncut key blank for each change key code.
   3. Furnish 6 cut masterkeys for each different masterkey set.
   4. Furnish 3 uncut key blanks for each masterkey set.
   5. Furnish 2 cut control keys cut to the top masterkey for permanent I/C cylinders.
   6. Furnish 1 cut control key cut to each SKD combination.

G. Furnish Schlage Padlocks and the cylinders to tie them into the masterkey system for gates, storage boxes, utility valve security, roof hatches and roll-up doors keyed as directed in the keying schedule.

2.4 FINISHES

A. Generally to be satin chrome US26D (626 on bronze and 652 on steel) unless otherwise noted.

B. Furnish push plates, pull plates and kick or armor plates in satin stainless steel US32D (630) unless other wise noted.

C. Door closers shall be powder-coated to match other hardware, unless otherwise noted.

D. Aluminum items to be finished anodized aluminum except thresholds which can be furnished as standard mill finish.

2.5 FASTENERS

A. Screws for strikes, face plates and similar items shall be flat head, countersunk type, provide machine screws for metal and standard wood screws for wood.

B. Screws for butt hinges shall be flathead, countersunk, full-thread type.

C. Fastening of closer bases or closer shoes to doors shall be by means of sex bolts and spray painted to match closer finish.

D. Provide expansion anchors for attaching hardware items to concrete or masonry.

E. All exposed fasteners shall have a phillips head.

F. Finish of exposed screws to match surface finish of hardware or other adjacent work.

G. All Exit Devices and Lock Protectors shall be fastened to the door by the means of sex bolts or through bolts.

PART 3 - EXECUTION

3.1 INSPECTION

A. Verify that doors and frames are square and plumb and ready to receive work and dimensions are as instructed by the manufacturer.

B. Beginning of installation means acceptance of existing conditions.

C. Fire-Rated Door Assembly Inspection: Upon completion of the installation, all fire door assemblies shall be inspected to confirm proper operation of the closing device and latching device and that

DocuSign Envelope ID: 330DEBD6-9A9E-4F34-BDCC-1AC1BAA701E9

only the manufacturer's furnished fasteners are used for installation and that it meets all criteria of a fire door assembly per NFPA 80 (Standard for Fire Doors and Other Opening Protectives) 2007 Edition. A written record shall be maintained and transmitted to the Owner to be made available to the Authority Having Jurisdiction (AHJ). The inspection of the swinging fire doors shall be performed by a certified FDAI (Fire Door Assembly Inspector) with knowledge and understanding of the operating components of the type of door being subjected to the inspection. The record shall list each fire door assembly throughout the project and include each door number, an itemized list of hardware set components at each door opening, and each door location in the facility.

3.2 INSTALLATION

A. Install hardware in accordance with manufacturer's instructions and requirements of DHI.

B. Use the templates provided by hardware item manufacturer.

C. Mounting heights for hardware shall be as recommended by the Door and Hardware Institute. Operating hardware will to be located between 30" and 44" AFF.

D. Set units level, plumb and true to line and location. Adjust and reinforce the attachment substrate as necessary for proper installation and operation.

E. Drill and countersink units that are not factory-prepared for anchorage fasteners. Space fasteners and anchors in accordance with industry standards.

F. Set thresholds for exterior doors in full bed of butyl-rubber sealant.

G. If hand of door is changed during construction, make necessary changes in hardware at no additional cost.

H. Hardware Installer shall coordinate with security contractor to route cable to connect electrified locks, panic hardware and fire exit hardware to power transfers or electric hinges at the time these items are installed so as to avoid disassembly and reinstallation of hardware.

I. Hardware Installer shall also be present with the security contractor when the power is turned on for the testing of the electronic hardware applications. Installer shall make adjustments to solenoids, latches, vertical rods and closers to insure proper and secure operation.

J. All wiring for electro-mechanical hardware mounted on the door shall be connected through the power transfer and terminated in the interface junction box specified for in the Electrical Section.

K. Conductors shall be minimum 18 gage stranded, multicolored. A minimum 12 in. loop of conductors shall be coiled in the interface junction box. Each conductor shall be permanently marked with its function.

L. If a power supply is specified in the hardware sets, all conductors shall be terminated in the power supply. Make all connections required for proper operation between the power supply and the electro-mechanical hardware. Provide the proper size conductors as specified in the manufacturer's technical documentation.

3.3 ADJUST AND CLEAN

A. Adjust and check each operating item of hardware and each door, to ensure proper operation or function of every unit. Replace units which cannot be adjusted to operate freely and smoothly as intended for the application made.

B. Clean adjacent surface soiled by hardware installation.

C. Final Adjustment: Wherever hardware installation is made more than one month prior to acceptance or occupancy, return to that work area and make final check and adjustment of all hardware items in such space or area. Clean operating items as necessary to restore proper function and finish of hardware and doors. Adjust door control devices to compensate for final operation of heating and ventilating equipment.

D. Instruct Owner's Personnel in proper adjustment and maintenance of hardware finishes, during the final adjustment of hardware.

DocuSign Envelope ID: 330DEBD6-9A9E-4F34-BDCC-1AC1BAA701E9

E. Continued Maintenance Service: Approximately six months after the completion of the project, the Contractor accompanied by the Architectural Hardware Consultant, shall return to the project and re-adjust every item of hardware to restore proper functions of doors and hardware. Consult with and instruct Owner's personnel in recommended additions to the maintenance procedures. Replace hardware items which have deteriorated or failed due to faulty design, materials or installation of hardware units. Prepare a written report of current and predictable problems (of substantial nature) in the performance of the hardware.

3.4 HARDWARE LOCATIONS

A. Conform to CCR, Title 24, Part 2; and ADAAG; and the drawings for access-compliant positioning requirements for the disabled.

3.5 FIELD QUALITY CONTROL

A. Architectural Hardware Consultant (AHC) to inspect installation and certify that hardware and it's installation have been furnished and installed in accordance with manufacturer's instructions and as specified herein.

3.6 SCHEDULE

A. The items listed in the following schedule shall conform to the requirements of the foregoing specifications.

B. The Door Schedule on the Drawings indicates which hardware set is used with each door.

Manufacturers Abbreviations (Mfr.)

BLU	=	Blumcraft	Glass Door Exit Hardware
GLY	=	Glynn-Johnson Corporation	Overhead Door Stops
IVE	=	Ives	Hinges, Bolts, Coordinators, Dust Proof Strikes, Push Pull & Kick Plates, Door Stops & Silencers
LCN	=	LCN	Door Closers
NGP	=	National Guard Products	Thresholds, Gasketing & Weather-stripping
PEM	=	Pemko	Astragal
SCH	=	Schlage Lock Company	Locks, Latches & Cylinders

HARDWARE GROUP NO. 01 DOOR 01B

2	EA	PIVOT SET	7215 SET	626	IVE
2	EA	EXIT DEVICE	H-100-A	630	BLU
2	EA	MORTISE CYLINDER	20-061-ICX	626	SCH
2	EA	FSIC CORE	23-030	626	SCH
2	EA	OH STOP	90S	630	GLY
2	EA	CONCEALED CLOSER	2030 OP ST-2211	689	LCN
1	EA	RAIN DRIP	16A	CL	NGP
1	SET	WEATHER-STRIPP	A651	AL	NGP
1	SET	ASTRAGAL	A650/2	AL	NGP
1	EA	THRESHOLD	653 MS/LA	AL	NGP

HARDWARE GROUP NO. 02 DOORS 01A, 01C, 18A & 18C

5	EA	DOOR EDGE SEALS	313AN X DOOR HEIGHT	AL	PEM
4	EA	DOOR TOP SEALS	313AN X DOOR WIDTH	AL	PEM
4	EA	AUTO DOOR BOTTOM	434ANBL X DOOR WIDTH	AL	PEM

DocuSign Envelope ID: 330DEBD6-9A9E-4F34-BDCC-1AC1BAA701E9

RE-USE BALANCE OF EXISTING
DOORS, FRAMES, & HARDWARE

HARDWARE GROUP NO. 03 DOOR 03C

3	EA	HW HINGE	5BB1HW 4.5 X 4.5 NRP	630	IVE
1	EA	ENTRANCE LOCK	LV9456T 06A	630	SCH
1	EA	FSIC CORE	23-030	626	SCH
1	EA	SURFACE CLOSER	4040XP EDA	689	LCN
1	EA	OVERHEAD STOP/HOLDER	100H-ADJ	630	GLY
1	SET	SEALS	5050B	BRN	NGP
1	EA	DOOR BOTTOM	35VA	CL	NGP
1	EA	THRESHOLD	653 MS/LA	AL	NGP

HARDWARE GROUP NO. 04 DOOR 06A

3	EA	HW HINGE	5BB1 4.5 X 4.5 NRP	630	IVE
1	EA	CLASSROOM LOCK	L9070T 06A	630	SCH
1	EA	FSIC CORE	23-030	626	SCH
1	EA	SURFACE CLOSER	4040XP EDA	689	LCN
1	EA	DOOR STOP/HOLDER	FS42	626	IVE
1	SET	SEALS	5050B	BRN	NGP
1	EA	DOOR BOTTOM	35VA	CL	NGP
1	EA	THRESHOLD	653 MS/LA	AL	NGP

HARDWARE GROUP NO. 05 DOOR 13A

3	EA	HW HINGE	5BB1 4.5 X 4.5 NRP	630	IVE
1	EA	EXIT DEVICE	LD-98-L 996L-06	630	VON
1	EA	RIM CYLINDER	20-057-ICX	626	SCH
1	EA	FSIC CORE	23-030	626	SCH
1	EA	SURFACE CLOSER	4040XP EDA	689	LCN
1	EA	DOOR STOP/HOLDER	FS43	626	IVE
1	SET	SEALS	5050B	BRN	NGP
1	EA	DOOR BOTTOM	35VA	CL	NGP
1	EA	THRESHOLD	653 MS/LA	AL	NGP

HARDWARE GROUP NO. 06 DOOR 15A

2	EA	PIVOT SET	7215 SET	626	IVE
2	EA	INTERMEDIATE PIVOT	7215 INT	626	IVE
1	EA	EXIT DEVICE	LD-9827-EO-LBR	630	VON
1	EA	EXIT DEVICE	LD-9827-L-LBR 996L-06	630	VON
1	EA	RIM CYLINDER	20-057-ICX	626	SCH
1	EA	FSIC CORE	23-030	626	SCH
2	EA	SURFACE CLOSER	4040XP EDA	689	LCN
2	EA	DOOR STOP/HOLDER	FS42	626	IVE
1	SET	ASTRAGAL	9115A	CL	NGP

DocuSign Envelope ID: 330DEBD6-9A9E-4F34-BDCC-1AC1BAA701E9

1	EA	RAIN DRIP	16A	CL	NGP
2	EA	JAMB SEALS	110NA	CL	NGP
1	SET	SEALS	5050B	BRN	NGP
2	EA	DOOR SWEEP	200NA	CL	NGP
1	EA	THRESHOLD	PER DETAIL (8” DEEP)	AL	NGP

HARDWARE GROUP NO. 07 DOOR 03B

3	EA	HW HINGE	5BB1 4.5 X 4.5 NRP	630	IVE
1	EA	STOREROOM LOCK	L9080T 06A	630	SCH
1	EA	FSIC CORE	23-030	626	SCH
1	EA	SURFACE CLOSER	4040XP EDA	689	LCN
1	EA	DOOR STOP/HOLDER	FS42	626	IVE
1	SET	SEALS	5050B	BRN	NGP

HARDWARE GROUP NO. 08 DOORS 09A, 11A & 18B

1	EA	RAIN DRIP	16A	CL	NGP
1	SET	WEATHER-STRIPP	A651	AL	NGP
1	SET	ASTRAGAL	A650/2	AL	NGP
			REUSE BALANCE OF EXISTING HARDWARE		

HARDWARE GROUP NO. 09 DOOR 14C

6	EA	HW HINGE	5BB1 4.5 X 4.5	630	IVE
2	EA	INVISIBLE LATCH	CL12	626	IVE
2	EA	AUXILIARY PUSHER	CL14	626	IVE
2	EA	OVERHEAD STOP	450S	652	GLY

END OF SECTION

DocuSign Envelope ID: 330DEBD6-9A9E-4F34-BDCC-1AC1BAA701E9

Catalog Cuts

for

IERBYS BRIDGE YARD

Prepared By
JEFF SILVEIRA, AHC
ALLEGION
6689 OWENS DRIVE - SUITE 200

PLEASANTON, CA 94588
925-462-4777
jeff.silveira@allegion.com
Created 10/02/2014

200

DocuSign Envelope ID: 330DEBD6-9A9E-4F34-BDCC-1AC1BAA701E9
Specworks® Cut Ref.# BLU_0001 pg 1 of 1

Blumcraft OF PITTSBURGH

DOOR HARDWARE

H-100A PANIC DEVICE (SHOWN)

The top latch bolt is retracted by pushing the interior "L" shaped crash bar. A conveniently located built-in dogging device keeps the latch bolt in the retracted position and the crash bar becomes fixed. Exterior key cylinder for entry is optional.

DB-100A DEADBOLT HOUSING (SHOWN)

The upper deadbolt is operated by key cylinders on both sides or with an interior thumbturn.

DH-100A DUMMY HOUSING

This matches the H-100A panic device and the DB-100A deadbolt, but has no locking mechanism.

FOR TEMPERED GLASS DOORS OVER 8'6" TALL, CONTACT BLUMCRAFT

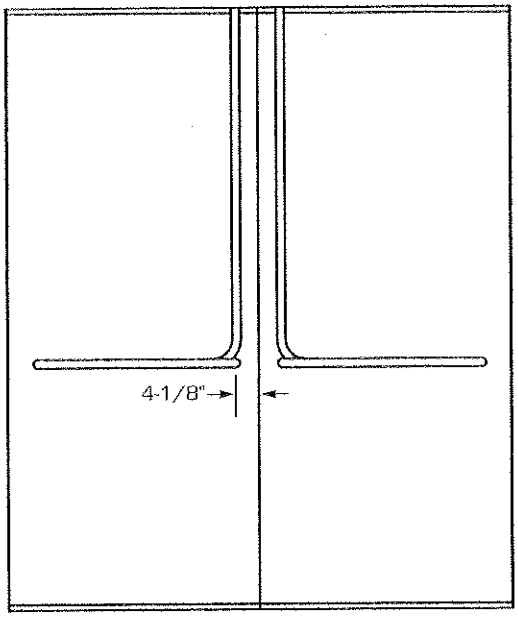

HARDWARE IS FABRICATED FROM 1-1/4" DIAMETER STAINLESS STEEL OR ARCHITECTURAL BRONZE TUBING IN SATIN OR HIGHLY POLISHED FINISHES. STATUARY BRONZE AND POWDER COATED FINISHES ALSO AVAILABLE

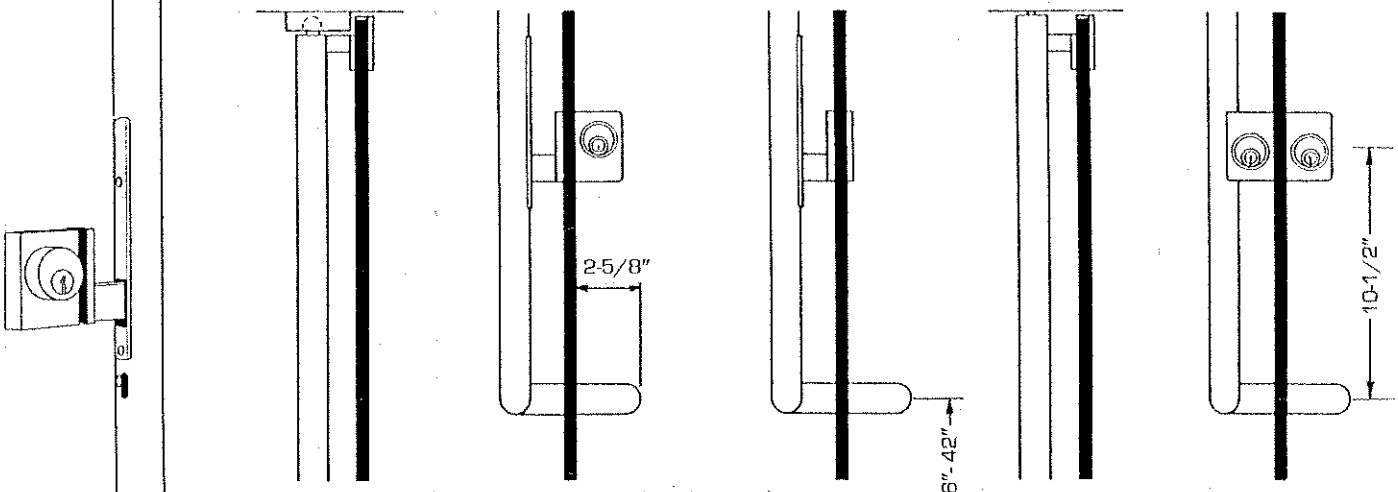

PANIC HANDLE H-100A | PANIC HANDLE H-100A WITH KEY CYLINDER | PANIC HANDLE H-100A WITHOUT KEY CYLINDER | DEADBOLT LOCK HANDLE DB-100A | DEADBOLT LOCK HANDLE DB-100A WITH KEY CYLINDERS

SECTIONS

C UL US LISTED

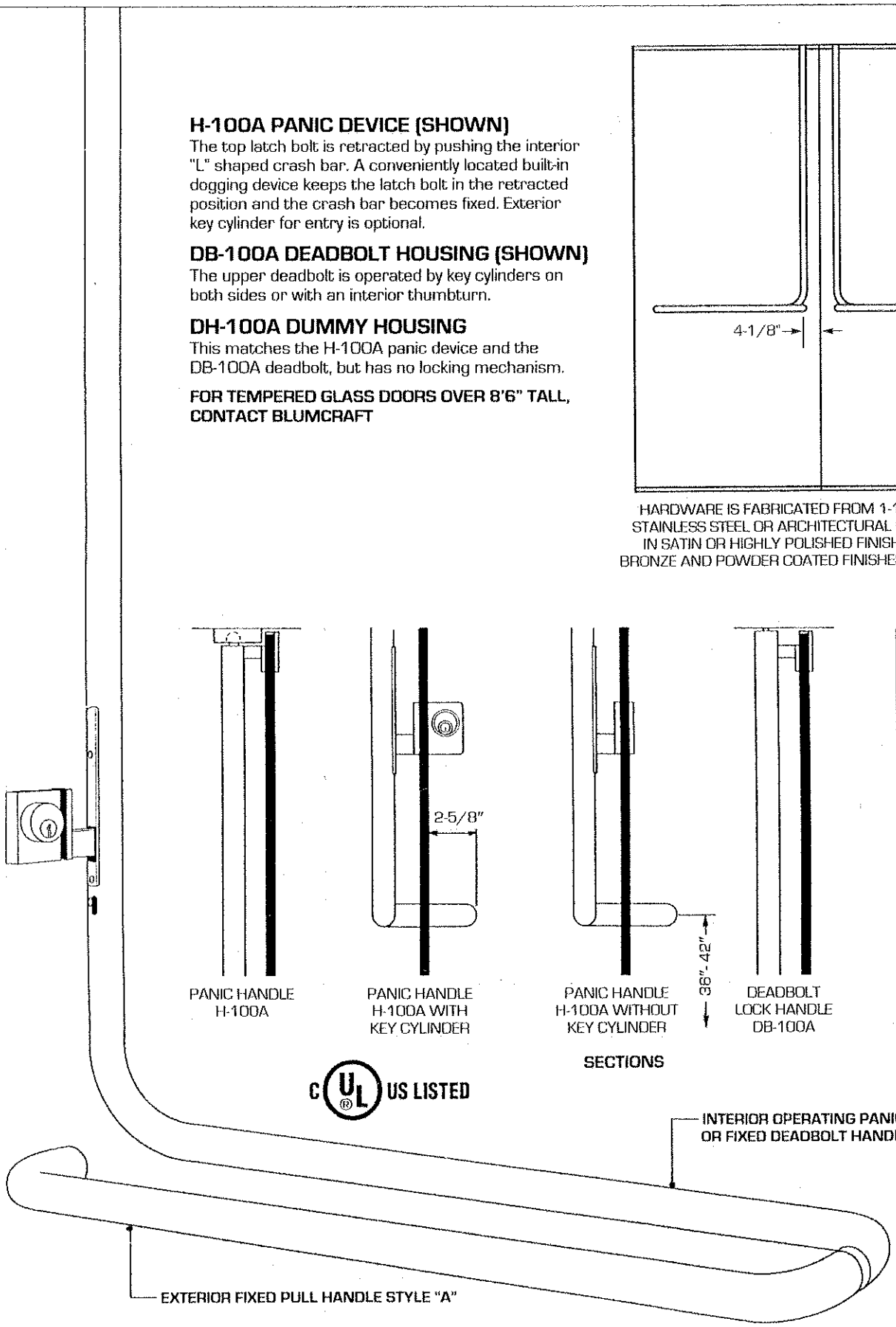

PDF created by Specworks® Page 2 of 58

DocuSign Envelope ID: 330DEBD6-9A9E-4F34-BDCC-1AC1BAA701E9
Specworks® Cut Ref.# BLU_5001 pg 1 of 2

Blumcraft OF PITTSBURGH

PANIC AND DEADBOLT HOUSINGS

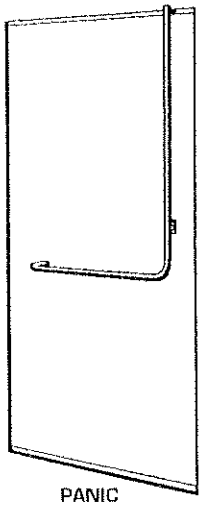

PANIC
H-100

PANIC HOUSINGS

OPERATING HANDLES ON INTERIOR SIDE OF DOOR

MAXIMUM DOOR HEIGHTS
With Crash Bar at 42" High (H-100 Only)

DOOR HEIGHT	GLASS THICKNESS	EXTERIOR HANDLES APPLICABLE
8'-6"	1/2"	All
9'-0"	1/2"	"F" Full Height
9'-0"	1/2"	"F" 10" Short of Door Bottom
9'-0"	3/4"	All

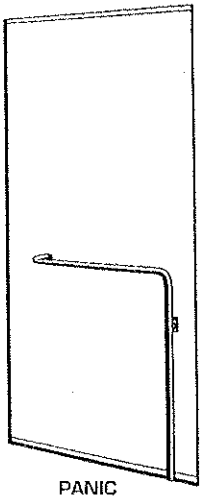

PANIC
H-110

PANIC AND DEADBOLT HOUSINGS:
Specify Operating Housing and Pull Handle
Example: **H-100-B, DB-160-J**

DUMMY HOUSINGS:
Specify Prefix DH, Similar Operating Housing (Interior) and Pull Handle
Example: **DH-130-K**

PUSH/PULL HANDLES:
Specify Prefix PP, Interior Handle, Exterior Handle
Example: **PP-B-E**

Panic, Deadbolt and Dummy Housings Available in Stainless Steel or Architectural Bronze

Push/Pull Handles Available in Stainless Steel, Architectural Bronze or Aluminum

DEADBOLT LOCK HOUSINGS

WITH LOCKING MECHANISM ON INTERIOR SIDE OF DOOR

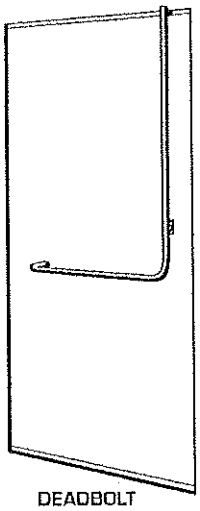

DEADBOLT
DB-100

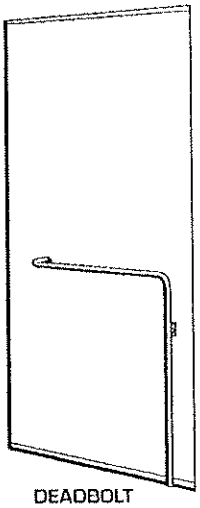

DEADBOLT
DB-110

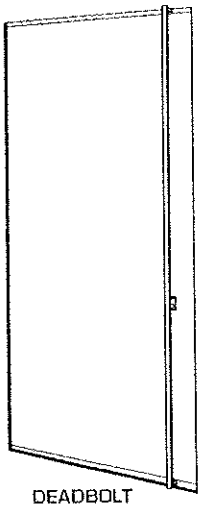

DEADBOLT
DB-130

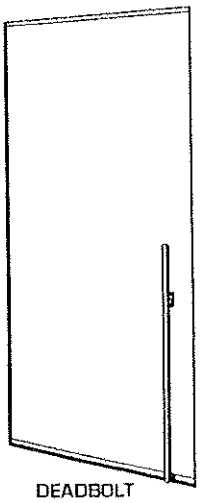

DEADBOLT
DB-140

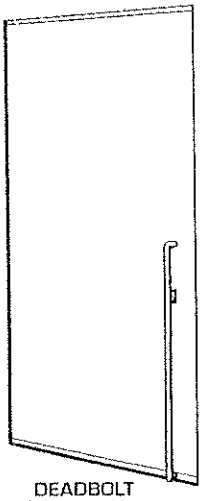

DEADBOLT
DB-150

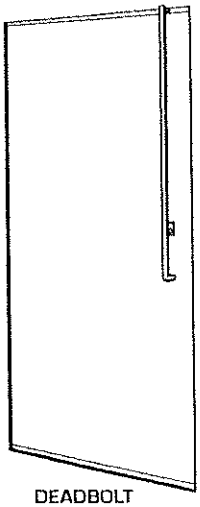

DEADBOLT
DB-160

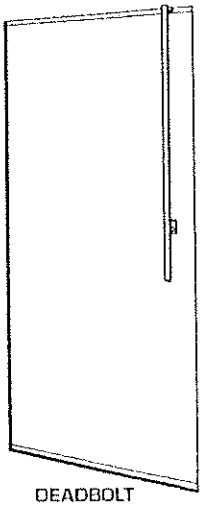

DEADBOLT
DB-170

MORTISE CYLINDER EQUIVALENTS
(1-1/8" NOMINAL LENGTH)

MANUFACTURER	MODEL NO.	CAM.NO.
ARROW	MC61	001
ASSA	6551	5
BEST	1E64	1EC4
CORBIN/RUSSWIN	1000-118	A02
FALCON	985	4
ILCO (LORI)	7186XX	1
MEDECO	10-0200	CT-Z01
SARGENT	41	13-0660
SCHLAGE*	20-001	8502-191
YALE	2153	1161

*Standard with Blumcraft Panic and Deadbolt Hardware

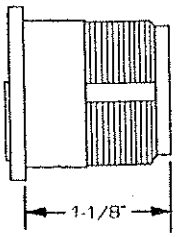

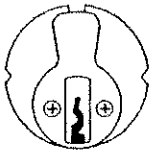

Removable core cylinders and thumbturns are applicable with the straight cams shown. Cylinder collars for Blumcraft hardware will vary with the cylinder lengths longer than 1-1/8"

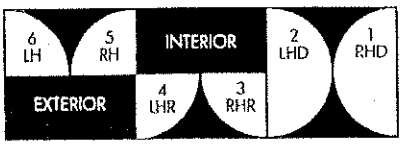

DOOR SWING DIAGRAM

PDF created by Specworks® Page 3 of 58

Specworks® Cut Ref # GLY_0003 pg 1 of 4
DocuSign Envelope ID: 330DEBD6-9A9E-4F34-BDCC-1AC1BAA701E9

90 Series Surface Overhead Door Holders/Stops

90 Series Heavy-Duty

Glynn-Johnson 90 series holders and stops are the most rugged models available for heavy-duty applications. The channel is surface-mounted to the door, most often with sex bolts, and the jamb bracket is surface mounted to the jamb, requiring minimal door and frame preparation.

These versatile units can be used in conjunction with most surface-applied door closers. The provided templates allow for variable mounting positions, ranging from 85º to 110º Hold-Open/Stop angle. These templates are designed for installation in almost all types of doors, including doors with conventional butt-type hinges or specialty hinges.

Four Models:
- 90H Series Hold-Open Model
- 90S Series Stop-Only Model
- 90F Series Friction Hold-Open Model
- 90SE Series Special Stop-Only Model

Five Sizes:
- Simple
- Standardized
- Each model is available in five sizes

Three Options:
- J—Angle Jamb Bracket
- SHIM—Blade Stop Shim Kits
- SOC—Pin-in-Socket Security Screw Package

Unmatched Convenience:
- Non-Handed
- Improved Compatibility with Door Closers
- Single-Acting Doors
- Interior/Exterior Applications
- Durable
- Easy to Install
- Improved Corrosion Resistance
- Function Conversion Kits Available

Materials and Finishes:
In 300 series Stainless Steel, Brass and Steel substrates, these models are available in the largest selection of finishes in the industry. Stainless Steel models offer the highest resistance to corrosion. Available in the following finishes:

Finish	Description
US3	Polished Brass
US4	Satin Brass
US10	Satin Bronze
US10B	Oil Rubbed Bronze
US32	Polished Stainless Steel
US32D	Satin Stainless Steel
SP4	Powder Coat Brass
SP10	Powder Coat Bronze
SP28	Powder Coat Aluminum
SP313	Powder Coat Dark Bronze
SPBLK	Powder Coat Black
652	Chrome-like Coating

Models

Glynn-Johnson 90 series door holders and stops provide long-lasting protection for doors, frames and hardware. All models incorporate a heavy-duty channel/slide-arm design and offset jamb bracket. This unique design allows for simple field modification of functions, should user requirements change.

90H Series Hold-Open

(Suffix H) Hold-Open models provide a convenient method of holding the door open at a predetermined position for short or long periods of time, permitting an unobstructed traffic flow through the opening. The Hold-Open function can easily be turned on or off by simply rotating the serrated knob on the bottom of the channel. This knob engages the Hold-Open mechanism, allowing the door to be held open at a predetermined position ranging from 85º to 110º. When the knob is flipped over, it acts as a stop and shock absorber.

The tension on the Hold-Open mechanism can be adjusted using a phillips screwdriver to offset air currents or other exterior conditions. The Hold-Open tension adjustment is located on the top of the slider in the channel.

90S Series Stop-Only

(Suffix S) When the Hold-Open function is not a requirement, Stop-Only models provide a reliable method of door control. Stop-Only models provide the same shock-absorbing capability as Hold-Open models. The Stop-Only model may be used on fire doors.

90F Series Friction Hold-Open

(Suffix F) Friction Hold-Open models are ideal for patient room doors, wardrobe and closet doors or similar applications where multiple Hold-Open positions are desired. The friction tension can be adjusted through the top of the channel using an allen wrench. The friction tension adjustment is located on the top of the slider in the channel.

PDF created by Specworks® Page 5 of 58

Specworks® Cut Ref # GLY_0003 pg 2 of 4
DocuSign Envelope ID: 330DEBD6-9A9E-4F34-BDCC-1AC1BAA701E9

90SE Series Special Stop-Only

(Suffix SE) When Stop-Only models are used in conjunction with single-point, Hold-Only electronic door closers, the Stop-Only function may be ordered without the shock-absorbing mechanism. Used as an auxiliary stop, these models prolong the life of the closer. The stop location is adjusted using an allen wrench on the stop block located in the channel.

Note: Caution should be taken when using this option in other applications, as the elimination of the shock-absorbing spring can put added stress on the door and frame.

Application Information

UL Classification

The 90 series Stop-Only models are classified by Underwriters Laboratories (UL) as Miscellaneous Fire Door Accessories. This classification applies to use on either Hollow Metal Fire Doors or Wood Fire Doors. These units may be used on doors of any rating. As a reminder, the Miscellaneous Fire Door Accessories (GVUX) section is defined by UL as: "Miscellaneous fire door accessories are intended in the individual Listings. The accessories have been investigated to determine that when installed in accordance with the manufacturer's instructions, the accessories do not adversely affect the fire rating of the fire door and/or fire door frames."

Dead-Stop Templating:

Dead-stop templating is recommended for applications where a wall or similar obstruction is placed at an opening angle of 110º or less (i.e., doors that open back-to-back). Dead-stop templating can be applied to Hold-Open, Stop-Only and Friction models. The Dead-Stop position is the point at which the shock-absorbing spring is fully compressed. Therefore, when Dead-Stop Templating is used, the initial degree of opening will be 5º to 7º less than the Dead-Stop opening.

Example: If the holder is templated to a 100º Dead Stop, the door will hold open at an angle between 93º and 95º but no further than 100º

Note: Do not use dead-stop templating on the 90SE Series since there is no shock-absorbing spring.

Environmental Considerations:

Environmental factors should always be considered when specifying overhead holders and stops. Doors that are positioned on a building's exterior or subject to corrosive conditions should be equipped with a holder constructed primarily of stainless steel or brass materials. For interior applications, steel is acceptable, though brass substrates generally provide a more attractive architectural-grade finish.

Function Conversion Kits

- FK90H—Converts a 90F or a 90S unit into a 90H unit. To order specify FK90H.
- FK90F—Converts a 90H or a 90S unit into a 90F unit. To order specify FK90F.
- FK90SE—Converts a 90H, 90F or a 90S unit into a 90SE unit. To order specify FK90SE–Finish.
- No kit is needed to convert a 90H or 90F unit into a 90S unit.

Options

Suffix J (Angle Jamb Bracket):

An angle jamb bracket is available for converting standard models to hinge-side or flush transom mounting. The angle jamb bracket affixes to the standard jamb bracket. If ordered with the unit add suffix J. If needed separately order 90J by finish needed.

Suffix SOC (Pin-in-Socket Security Screws):

A screw package with pin-in-socket screws for mounting the door bracket and the jamb bracket is provided instead of the standard screw package.

Suffix SHIM (Blade Stop Shims):

Shim kits are available in 3 sizes
90 SHIM1 is a 1/4" Shim Kit
90 SHIM2 is a 1/2" Shim Kit
90 SHIM3 is a 3/4" Shim Kit

If ordered with overhead, add suffix SHIM (1, 2 or 3). If needed separately order 90 SHIM (1, 2 or 3)–Finish.

PDF created by Specworks® Page 6 of 58

Specworks® Cut Ref # GLY_0003 pg 3 of 4
DocuSign Envelope ID: 330DEBD6-9A9E-4F34-BDCC-1AC1BAA701E9

90 Series Surface Overhead Door Holders/Stops

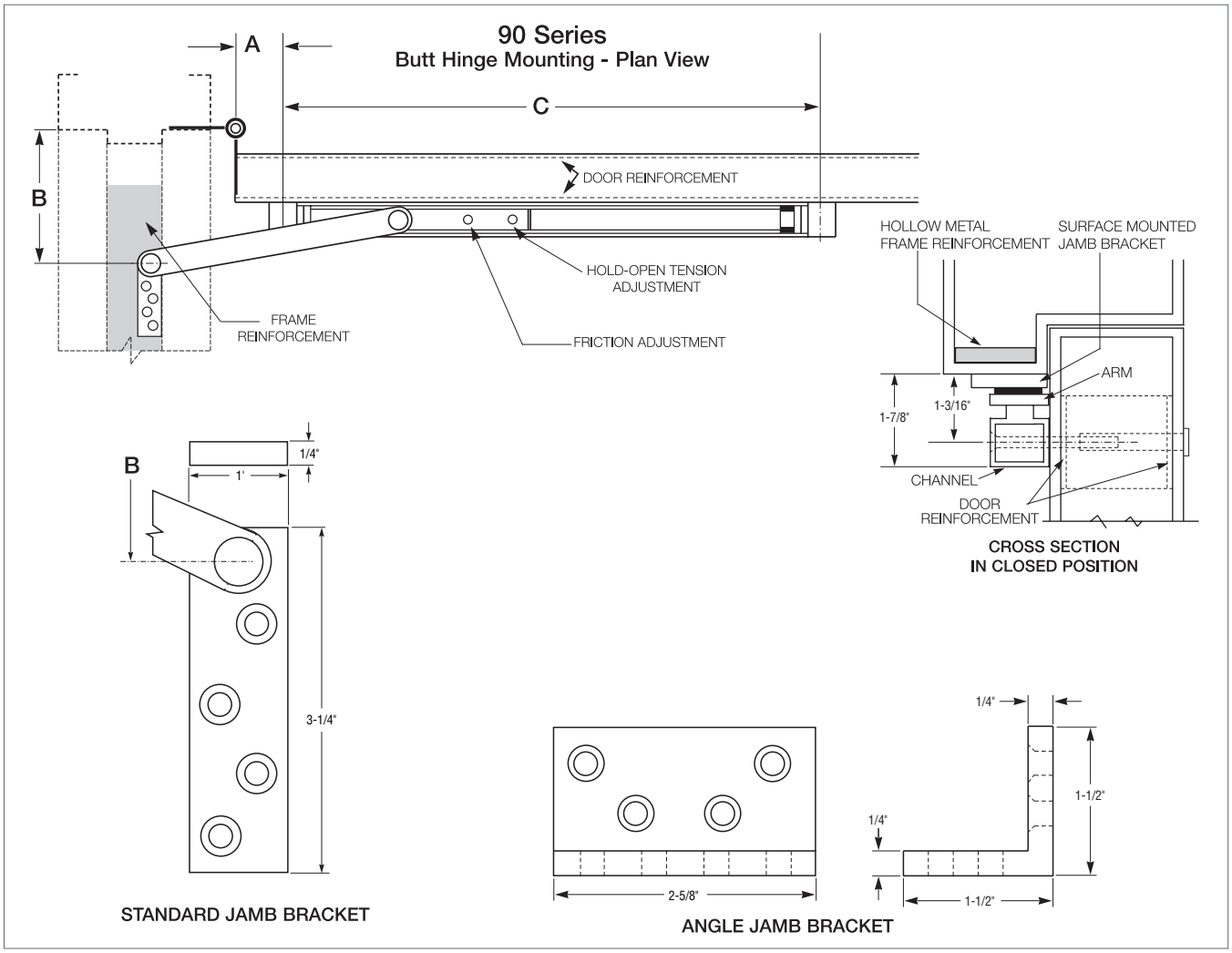

90 Series Sizing Chart								
BUTTS/OFFSET PIVOTS					CENTER HUNG			
SIZE	DOOR OPENING	STOP ONLY	HOLD OPEN	FRICTION	DOOR OPENING	STOP ONLY	HOLD OPEN	FRICTION
1	-----	-----	-----	-----	-----	----	----	----
2	23-1/16"–27"	902S	902H	902F	27-1/16"–33"	902S	902H	902F
3	27-1/16"–33"	903S	903H	903F	33-1/16"–39"	903S	903H	903F
4	33-1/16"–39"	904S	904H	904F	39-1/16"–45"	904S	904H	904F
5	39-1/16"–45"	905S	905H	905F	45-1/16"–51"	905S	905H	905F
6	45-1/16"–51"	906S	906H	906F	51-1/16"–59"	906S	906H	906F

Note: This chart illustrates the most common types of hinging and door opening sizes. For unusual door details, contact Glynn-Johnson for availability.

BHMA/ANSI, A156.8 & FED. Spec. Cross Reference		
G-J Model	BHMA*	FED. Spec.
902 - 906H	C02511	1161
902 - 906S	C02541	1161A
902 - 906F	C02531	—

** First numeral (0) designates optional material.*

To specify:
Brass material, change 0 to 1 (i.e. C12511)
Stainless Steel material, change 0 to 5 (i.e. C52511)
Steel material, change 0 to 8 (i.e. C82511)

The template information on this page is for reference only and is not intended to serve as an installation template. For complete dimensional information, refer to Glynn-Johnson template book.

PDF created by Specworks® Page 7 of 58

DocuSign Envelope ID: 330DEBD6-9A9E-4F34-BDCC-1AC1BAA701E9

How to Order

90 4 H – US32D – J

Overhead Series:
- **90**

Size (Door Opening Using Butts or Offset Pivots):

2	(23-1/16"–27")
3	(27-1/16"–33")
4	(33-1/16"–39")
5	(39-1/16"–45")
6	(45-1/16"–54")

Function:

H	Hold-Open
F	Friction Hold-Open
S	Stop-Only
SE	Special Stop-Only

Finishes:

US3	Polished Brass
US4	Satin Brass
US10	Satin Bronze
US10B	Oil Rubbed Bronze
US32	Polished Stainless Steel
US32D	Satin Stainless Steel
SP4	Powder Coat Brass
SP10	Powder Coat Bronze
SP28	Powder Coat Aluminum
SP313	Powder Coat Dark Bronze
SPBLK	Powder Coat Black
652	Chrome-like Coating

Options:

J	Angle Jamb Bracket
SHIM	Blade Stop Shims—
	SHIM1–1/4" Kit
	SHIM2–1/2" Kit
	SHIM3–3/4" Kit
SOC	Pin-in-Socket Security Screws

Specworks® Cut Ref # GLY_0004 pg 1 of 4
DocuSign Envelope ID: 330DEBD6-9A9E-4F34-BDCC-1AC1BAA701E9

100 Series Concealed Overhead Door Holders/Stops

100 Series Heavy-Duty

Glynn-Johnson offers a complete line of overhead door holders and stops, accommodating virtually all openings with solutions for even the most complex door control problems. These concealed holders and stops provide the most attractive and reliable heavy-duty door control available.

Glynn-Johnson 100 series holders and stops provide the most reliable and versatile concealed overhead door control. They are designed for installation on virtually all types of doors mounted on conventional type butt hinges, pivots, continuous hinges, swing clear hinges and numerous other specialty hinges. When used in conjunction with many surface-applied door closers, 100 series holders and stops provide the most effective control for entrance doors and vestibule doors of all types, as well as heavy or often used interior doors. Templates provided allow for variable mounting positions, ranging from 85° - 110° of opening.

Five Models:
- 100H Series Hold-Open Model
- 100HP Series Internal Hold-Open Model
- 100F Series Friction Hold-Open Model
- 100S Series Stop-Only Model
- 100SE Series Special Stop-Only Model

Six Sizes:
- Each model comes in six sizes.
- Simple
- Standardized

Three Options:
- ADJ—Adjustable Jamb Bracket
- CJ—Jamb Bracket for use with LCN5030 Closer
- SOC—Pin-in-Socket Security Screw Package

Unmatched Convenience:
- Non-handed
- Improved Compatibility with Door Closers
- Single/Double-Acting Doors
- Interior/Exterior Applications
- Reduced Door Prep
- Durable
- Improved Corrosion Resistance
- Function Conversion Kits are Available.

Materials and Finishes:
In Heavy Gauge Brass or 300 Series Stainless Steel, these models offer the broadest range of finishes in the industry, complementing any design and offering the highest resistance to corrosion. Available in the following finishes:

Finishes	Description
US3	Polished Brass
US4	Satin Brass
US10	Satin Bronze
US10B	Oil Rubbed Bronze
US32	Polished Stainless Steel
US32D	Satin Stainless Steel
SP4	Powder Coat Brass
SP10	Powder Coat Bronze
SP28	Powder Coat Aluminum
SP313	Powder Coat Dark Bronze
SPBLK	Powder Coat Black

Models

These models provide a wide range of optional features, and are ideal for use on entrance and vestibule doors, large doors, doors opened frequently, or doors subject to abuse. These models are also furnished with an offset-style jamb bracket.

Designed for heavy-duty applications, 100 series models will provide long-lasting protection to doors, frames, hinges, related hardware and surrounding walls or obstructions.

100H Series Hold-Open

(Suffix H) The Hold-Open function should be used where it is desired to hold a door open at a predetermined position for short or long periods of time, permitting an unobstructed traffic flow through the opening.

These models are both selective and adjustable, featuring the most reliable Hold-Open mechanism available. They feature a control knob which protrudes from the face of the door and turns the Hold-Open function on or off. Set in the inactive position, the unit acts as a stop and shock absorber. The tension on the Hold-Open mechanism can be adjusted using an allen wrench to offset air currents or other exterior conditions. The Hold-Open tension adjustment is located in the bottom of the track in the top of the door.

100HP Series Internal Hold-Open

These models provide a Hold-Open unit with the Hold-Open mechanism built into the channel, thus reducing the door prep. The 100HP have a preset Hold-Open force that is not adjustable. The Hold-Open feature is not selectable in these units, so the doors are always held open.

PDF created by Specworks® Page 9 of 58

Specworks® Cut Ref # GLY_0004 pg 2 of 4
DocuSign Envelope ID: 330DEBD6-9A9E-4F34-BDCC-1AC1BAA701E9

100F Series Friction Hold-Open

(Suffix F) Friction Hold-Open models provide an alternative holding method, ideal for heavy patient room doors, closet doors or similar applications where multiple Hold-Open positions are desired. The friction tension is adjusted using an allen wrench and an open end wrench. The friction tension adjustment is located on the top of the slider in the channel.

100S Series Stop-Only

(Suffix S) When the Hold-Open function is not required, the Stop-Only function provides the same effective door control minus the Hold-Open feature. The Stop-Only model may be used on fire doors.

100SE Series Special Stop-Only

(Suffix SE) When Stop-Only models are used in conjunction with single point Hold-Open electronic door closers, they may be ordered without the shock-absorbing mechanism. Used as an auxiliary stop with these closers, they will prolong the life of the closer. The stop location is adjusted using an allen wrench on the stop block located in the channel.

Note: Caution should be used when using this option in other applications, as the elimination of the shock-absorbing spring can put added stress on door and frame if used improperly.

Application Information

UL Classification

The 100 series Stop-Only models are classified by Underwriters Laboratories (UL) as Miscellaneous Fire Door Accessories. This classification applies to use on either Hollow Metal Fire Doors or Wood Fire Doors. Where Wood Door manufacturer's listing allows for the cutout required for installation, concealed overhead stops may be used on those wood fire doors. These units may be used on doors of any rating. As a reminder, the Miscellaneous Fire Door Accessories (GVUX) section is defined by UL as: "Miscellaneous fire door accessories are intended in the individual Listings. The accessories have been investigated to determine that when installed in accordance with the manufacturer's instructions, the accessories do not adversely affect the fire rating of the fire door and/or fire door frames."

Dead Stop Templating:

If a wall or similar obstruction is in place at 110° or less opening angle (i.e. doors that open back-to-back), Dead Stop Templating should be used. This includes all Hold-Open, Friction and Stop-Only models, except when the "SE" Option is used. The Dead Stop position is reached when the shock-absorbing spring is fully compressed, the initial degree of opening will be 5° to 7° less than the Dead Stop opening.

Example: If the holder is templated to 100° Dead Stop, the door will hold open somewhere between 93° and 95°, but no further than 100°.

Note: Do not use dead-stop templating on the 100SE Series since there is no shock-absorbing spring.

Environmental Considerations:

Environmental factors should always be considered when specifying overhead holders and stops. Doors that are positioned on a building's exterior or subject to corrosive conditions should be equipped with a holder constructed primarily of stainless steel or brass materials. For interior applications, steel is acceptable, though brass substrates generally provide a more attractive architectural-grade finish.

Function Conversion Kits

- FK100F—Converts a 100H or 100S unit into a 100F unit. To order specify FK100F.
- FK100H—Converts a 100F or 100S unit into a 100H unit. To order specify FK100H.
- No kit is needed to convert a 100H or 100F unit into a 100S unit.

Options

Suffix ADJ (Adjustable Jamb Bracket):

An additional option on the 100 series is the adjustable jamb bracket, which allows the degree of Hold-Open or Stop angle to be adjusted after installation. Suffix "ADJ" is available in all functions, but only in sizes 3, 4, 5 & 6. ADJ jamb bracket requires additional frame prep. The ADJ option cannot be added to an existing unit, it must be factory ordered.

Suffix CJ (Closer Jamb Bracket):

Provides a special jamb bracket needed for 100 series units used with LCN5030 closers. These special jamb brackets are handed, so handing will need to be specified when ordering the "CJ" option, CJLH for a left hand door and CJRH for a right hand door. The CJ option cannot be added to an existing unit, it must be factory ordered.

Suffix SOC (Pin-in-Socket Security Screw Package):

A screw package with pin-in-socket screws for mounting the jamb bracket to the frame is provided instead of the standard screw package.

PDF created by Specworks® Page 10 of 58

Specworks® Cut Ref # GLY_0004 pg 3 of 4
DocuSign Envelope ID: 330DEBD6-9A9E-4F34-BDCC-1AC1BAA701E9

100 Series Concealed Overhead Door Holders/Stops

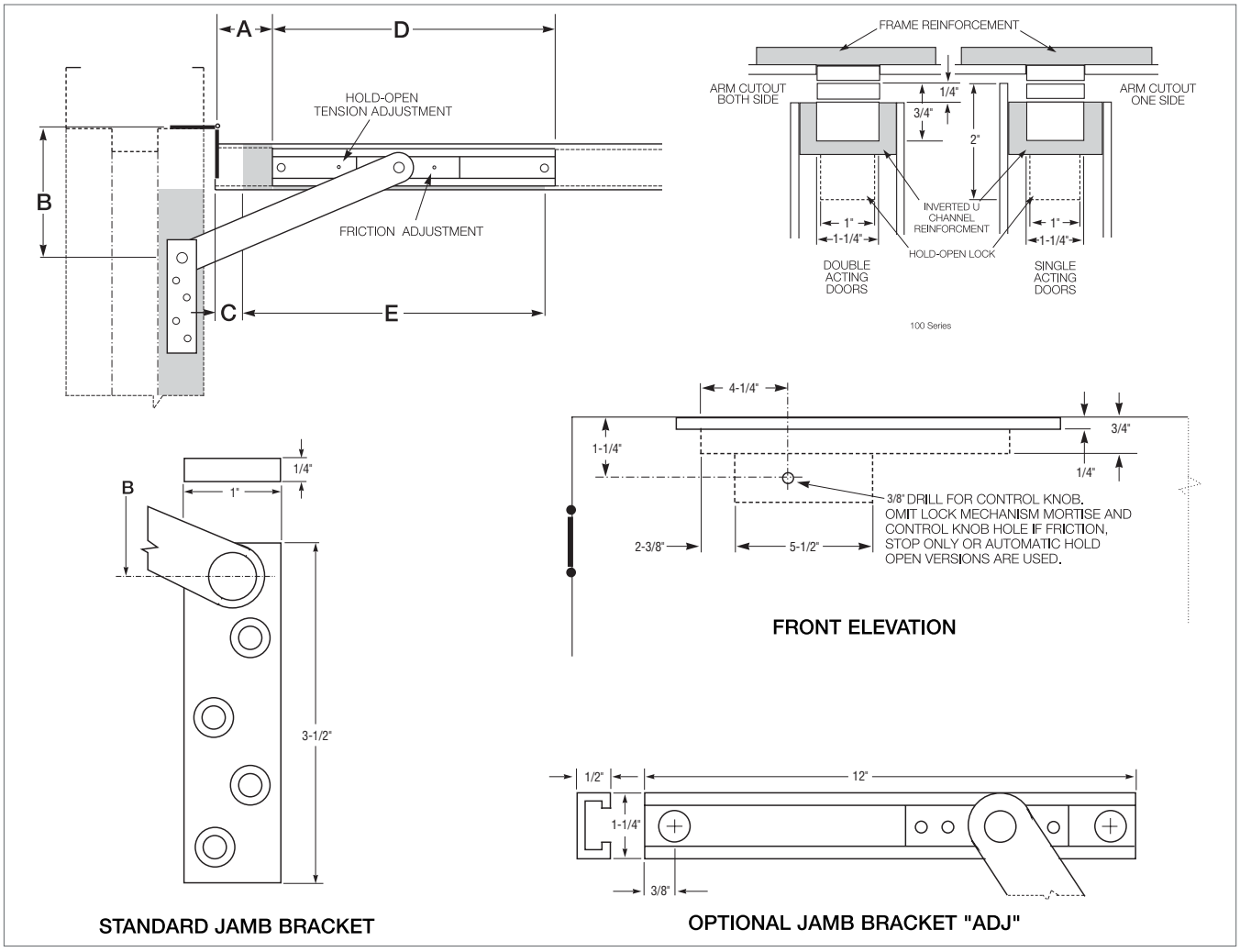

100 Series Sizing Chart								
	BUTTS/OFFSET PIVOTS				CENTER HUNG			
SIZE	DOOR OPENING	STOP ONLY	HOLD OPEN	FRICTION	DOOR OPENING	STOP ONLY	HOLD OPEN	FRICTION
1	18"–23"	101S*	101H*	101F*	-----	----	----	----
2	23-1/16"–27"	102S*	102H*	102F*	-----	-----	-----	-----
3	27-1/16"–33"	103S	103H	103F	33-1/16"–39"	103S	103H	103F
4	33-1/16"–39"	104S	104H	104F	39-1/16"–45"	104S	104H	104F
5	39-1/16"–45"	105S	105H	105F	45-1/16"–51"	105S	105H	105F
6	45-1/16"–54"	106S	106H	106F	51-1/16"–59"	106S	106H	106F

Note: This chart illustrates the most common types of hinging and door opening sizes. For unusual door details, contact Glynn-Johnson for availability.

**These sizes are not available for use with offset pivots. Also not available with the ADJ option.*

BHMA/ANSI, A156.8 & FED. Spec. Cross Reference		
G-J Model	BHMA*	FED. Spec.
101-106 H	C01511	1160
101-106 S	C01541	----
101-106 F	C01531	----

** First numeral (0) designates optional material.*

To specify:
Brass material, change 0 to 1 (i.e. C11511)
Stainless Steel material, change 0 to 5 (i.e. C51511)

BHMA

All 100 series models are designed for heavy-duty applications and far exceed BHMA cycle test and force test requirements for Grade 1 holders and stops.

The template information on this page is for reference only and is not intended to serve as an installation template. For complete dimensional information, refer to Glynn-Johnson template book.

PDF created by Specworks® Page 11 of 58

Specworks® Cut Ref # GLY_0004 pg 4 of 4
DocuSign Envelope ID: 330DEBD6-9A9E-4F34-BDCC-1AC1BAA701E9

How to Order

10 4 H – US26D – ADJ

Overhead Series:
- **10**

Size (Door Opening Using Butts or Offset Pivots:
- **1** (18"–23")
- **2** (23-1/16"–27")
- **3** (27-1/16" –33")
- **4** (33-1/16"–39")
- **5** (39-1/16"–45")
- **6** (45-1/16"–54")

Function:
- **H** Hold-Open
- **HP** Internal Hold-Open
- **F** Friction Hold-Open
- **S** Stop-Only
- **SE** Special Stop-Only

Finishes:
- **US3** Polished Brass
- **US4** Satin Brass
- **US10** Satin Bronze
- **US10B** Oil Rubbed Bronze
- **US32** Polished Stainless Steel
- **US32D** Satin Stainless Steel
- **SP4** Powder Coat Brass
- **SP10** Powder Coat Bronze
- **SP28** Powder Coat Aluminum
- **SP313** Powder Coat Dark Bronze
- **SPBLK** Powder Coat Black

Options:
- **ADJ** Adjustable Jamb Bracket
- **CJLH** Special Jamb Bracket for LCN 5030 Closer, LH Door
- **CJRH** Special Jamb Bracket for LCN 5030 Closer, RH Door
- **SOC** Pin-in-Socket Security Screws

PDF created by Specworks® Page 12 of 58

Specworks® Cut Ref # IVE_0277 pg 1 of 2
DocuSign Envelope ID: 330DEBD6-9A9E-4F34-BDCC-1AC1BAA701E9

Meets ANSI/BHMA A156.1
A8133 – Steel
A5133 – Stainless Steel
A2133 – Brass

5PB1 5 Knuckle, Plain Bearing Full Mortise Hinge

- For standard weight doors
- Low frequency usage
- Packed with wood and metal screws

Not for use with a door closer.

Options

- NRP, Non-Removable Pin
- SH, Security Stud
- HT, Hospital Tip
- RC, Round Corners - 1/4" or 5/8" Radius
- SEC, Security Fastners - Pin-in-Socket

Dimensions

Size (Inches)	Size (mm)	Gauge
3.5 x 3.5	89 x 89	0.123
4 x 4	102 x 102	0.134
4.5 x 4	114 x 102	0.134
4.5 x 4.5	114 x 114	0.134
5 x 4.5	127 x 114	0.134

Meets ANSI/BHMA A156.1
A8112 – Steel
A5112 – Stainless Steel
A2112 – Brass

5BB1 5 Knuckle, Ball Bearing Full Mortise Hinge

- For standard weight doors
- Medium frequency usage
- 2 ball bearing
- Packed with wood and metal screws

Options

- NRP, Non-Removable Pin
- SH, Security Stud
- HT, Hospital Tip
- RC, Round Corners - 1/4" or 5/8" Radius
- SEC, Security Fastners - Pin-in-Socket

Dimensions

Size (Inches)	Size (mm)	Gauge
3.5 x 3.5	80 x 102	0.130
4 x 4	102 x 102	0.130
4.5 x 4	114 x 102	0.134
4.5 x 4.5	114 x 114	0.134

Size (Inches)	Size (mm)	Gauge
5 x 4.5	127 x 114	0.146
5 x 5	127 x 127	0.146

Finishes *brass*

Ives Finish	US3	US4	US10	US10B	US10A	US11	US15	US26	US26D
BHMA	605	606	612	613	614	616	619	625	626

Finishes *steel*

Ives Finish	USP	US3	US4	US10	US10B	US10A	US11	US15	US26	US26D
BHMA	600	632	633	639	640	641	643	646	651	652

Finishes *stainless steel*

Ives Finish	US32	US32D
BHMA	629	630

PDF created by Specworks® Page 13 of 58

Specworks® Cut Ref # IVE_0278 pg 1 of 2
DocuSign Envelope ID: 330DEBD6-9A9E-4F34-BDCC-1AC1BAA701E9

Meets ANSI/BHMA A156.1
A8111 – Steel
A5111 – Stainless Steel
A2111 – Brass

5BB1HW — 5 Knuckle, Ball Bearing, Heavy Weight Full Mortise Hinge

- For heavy weight doors
- High frequency usage
- 4 ball bearing
- Packed with wood and metal screws

Options

- NRP, Non-Removable Pin
- SH, Security Stud
- HT, Hospital Tip
- RC, Round Corners - 1/4" or 5/8" Radius
- SEC, Security Fastners - Pin-in-Socket

Dimensions

Size (Inches)	Size (mm)	Gauge	Size (Inches)	Size (mm)	Gauge
4.5 x 4	114 x 102	0.180	5 x 4.5	127 x 114	0.190
4.5 x 4.5	114 x 114	0.180	5 x 5	127 x 127	0.190

Meets ANSI/BHMA A156.1
A8111 – Steel

5BB1WT — 5 Knuckle, Ball Bearing, Wide Throw Full Mortise Hinge

- For medium weight doors
- Medium frequency usage
- 2 ball bearing
- Packed with wood and metal screws

Options

- NRP, Non-Removable Pin
- SH, Security Stud
- HT, Hospital Tip
- RC, Round Corners - 1/4" or 5/8" Radius
- SEC, Security Fastners - Pin-in-Socket

Dimensions

Size (Inches)	Size (mm)	Gauge
4.5 x 5	114 x 127	0.134
4.5 x 6	114 x 152	0.134
5 x 6	127 x 152	0.146
5 x 7	127 x 178	0.146
5 x 8	127 x 203	0.146

Finishes *brass*

Ives Finish	US3	US4	US10	US10B	US10A	US11	US15	US26	US26D
BHMA	605	606	612	613	614	616	619	625	626

Finishes *steel*

Ives Finish	USP	US3	US4	US10	US10B	US10A	US11	US15	US26	US26D
BHMA	600	632	633	639	640	641	643	646	651	652

Finishes *stainless steel*

Ives Finish	US32	US32D
BHMA	629	630

PDF created by Specworks® Page 15 of 58

Specworks® Cut Ref # IVE_0291 pg 1 of 1
DocuSign Envelope ID: 330DEBD6-9A9E-4F34-BDCC-1AC1BAA701E9

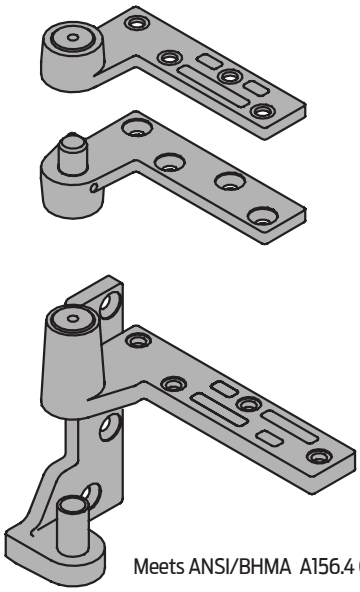

Meets ANSI/BHMA A156.4 C07131

7215
7215F 3/4" Offset Pivot

- Handed
- Top, header mount
- Bottom, jamb mount
- Use with 1-3/4" minimum door thickness, with 1/8" bevel in 2"
- Maximum door load 500 pounds
- Vertical adjustment range 3/16", with positive locking
- WP - optional weather resistant bottom pivot is modified for improved corrosion resistance. Available in US26D (626) or US32D (630) only.

Optional 7215-7226-7227 or 7215F-7226F-7227F Intermediate Pivot (handed) for each additional 100 pounds or doors over 7'. See page A47.
Optional 7215PT Power Transfer, non-load bearing. See page A49

7215 - Ul Listed 20 minute fire doors
7215F - UL Listed 3 hour fire doors

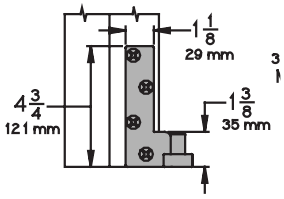

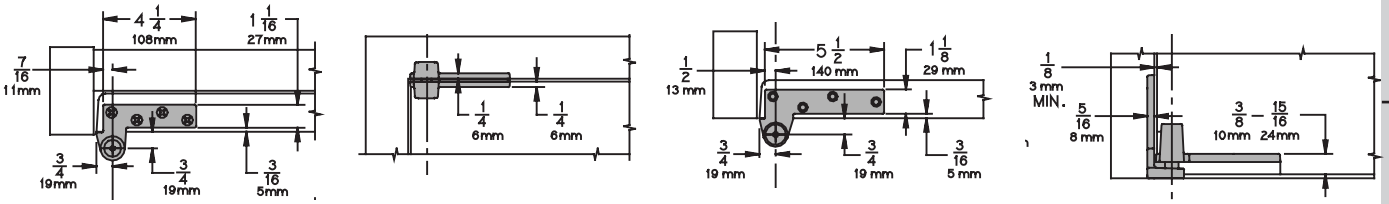

7215

Plated Finishes *brass*

US Number	US3	US4	US10	US10B	US26	US26D
BHMA Number	605	606	612	613	625	626

Painted Finishes *brass*

US Number	SP4	SP10	SP28	SP313	SPBLK
BHMA Number	706	691	689	695	622

7215F

Plated Finishes *steel*

US Number	US3	US10	US32	US32D
BHMA Number	632	639	629	630

Painted Finishes *steel*

US Number	SP4	SP10	SP28	SP313	SPBLK
BHMA Number	706	691	689	695	622

PDF created by Specworks® Page 17 of 58

Specworks® Cut Ref # IVE_0353 pg 1 of 1
DocuSign Envelope ID: 330DEBD6-9A9E-4F34-BDCC-1AC1BAA701E9

Meets ANSI/BHMA 156.16, L11241.

FS9 Floor Stop & Semi-Automatic Holder

- Semi-automatic floor-mounted holders accommodates with door to floor clearance of 1-1/2" or less.
- Cast from heavy-duty brass.
- Activate holder by flipping the engagement tongue forward. When door is opened, the hook (mounted on door) engages the tongue. To release, push firmly on door to disengage tongue.
- Universal screw pack accommodates all types of floor and door construction.

Dimensions

Overall Height: 3-1/2
Base Dimensions: 2" wide x 3-1/2" long

Finishes

Ives Number	US3	US4	US10	US10B	US26	US26D
BHMA	605	606	612	613	625	626

Meets ANSI/BHMA 156.16, L11301

FS40 FS41 FS42 FS43 Floor Stop & Automatic Holder

- Automatic door holders ideal for heavy-traffic situations that require a simple, fool-proof, Hold-Open device.
- Forged from brass.
- Unit is activated automatically when door is opened. A firm pull on door releases the mechanism.
- Strikes accommodate different door to floor clearances.
- Model numbers are determined by strike/door-to-floor clearances.
- Holder position on door is adjustable.
- Universal screw pack allows for installation in all types of door construction.

Dimensions

Door to Floor Clearance:	FS40	1/2" or less
	FS41	9/16" to 1-1/16"
	FS42	1-1/8" to 1-9/16"
	FS43	1-5/8" to 2-1/16"

Holder Dimensions: 3" Wide x 3-11/16" High

Finishes *brass*

Ives Number	US3	US4	US10	US10B	US26	US26D
BHMA	605	606	612	613	625	626

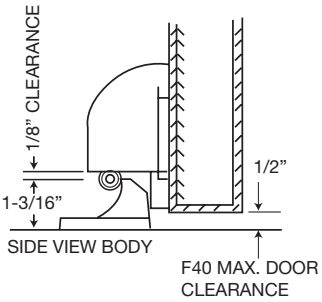

FS41

FS42

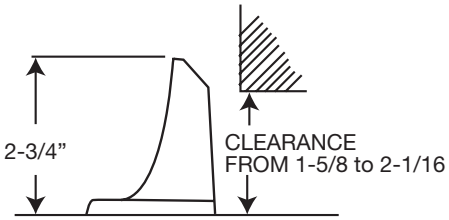

FS43

PDF created by Specworks® Page 18 of 58

Specworks® Cut Ref # LCN_2030 pg 1 of 5
DocuSign Envelope ID: 330DEBD6-9A9E-4F34-BDCC-1AC1BAA701E9

2030 SERIES

FEATURES

CONCEALED (IN 1-3/4″ TUBE) MOUNTING

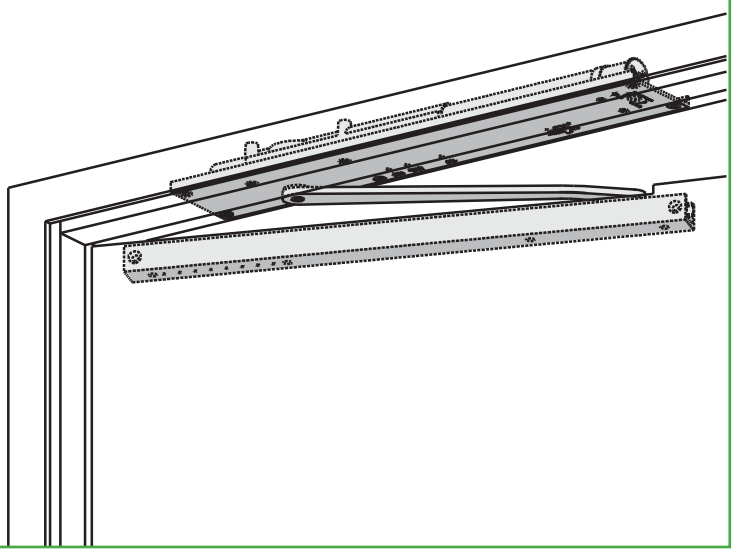

The concealed 2030 Series PACER® is a heavy duty closer designed to fit in a narrow, minimum 1-3/4″ aluminum transom. The single lever arm and roller assembly provide smooth, quiet door control and the choice of finishes and track functions meet virtually all architectural requirements.

The 2030 Series is UL & cUL listed for self-closing doors, without hold-open. Test and certified under ANSI Standard A156.4, grade one.

- Standard 2030 Series closer shipped with standard arm, standard track, mounting/finish plate, and wood and machine screw pack. See 2030 Series page 9 & 10 for options.
- Sized cylinders for interior doors to 4´6″ and exterior doors to 3´6″.
- Handed for right or left swinging doors.
- Aluminum frame requires minimum 1-3/4″ (44 mm) x 4″ (102 mm) tube.
- Closers to meet ADA requirements. See 2030 Series page 11.
- Standard or optional custom powder coat finish.
- Optional plated finish on arm, fasteners and finish plate.
- Optional SRI primer for installations in corrosive conditions. (Available with powder coat finishes only.)

CONCEALED MOUNTING			FINISH		CYLINDER				ARM		*ARM FUNCTION		
IN FRAME	IN 1-3/4″ TUBE	IN DOOR	POWDER COAT	PLATED	HANDED	SIZED	ACCESSIBILITY	DELAYED ACTION	CONCEALED	EXPOSED	STANDARD (SINGLE)	REGULAR (DOUBLE)	HOLD-OPEN
○	●	○	●	●	●	●	♿	○	●	○	180°	○	110°

● AVAILABLE
○ NOT AVAILABLE

♿ *Closer available with less than 5.0 lbs. opening force on 36" door.*
* *Maximum opening/hold-open point with standard template. See individual closer series for degrees of opening per installation.*

PHONE 877-671-7011
FAX 800-248-1460
www.allegion.com/us
2/14

LCN®

PDF created by Specworks® Page 19 of 58

Specworks® Cut Ref # LCN_2030 pg 2 of 5
DocuSign Envelope ID: 330DEBD6-9A9E-4F34-BDCC-1AC1BAA701E9

2030 SERIES

MOUNTING DETAILS

CONCEALED MOUNTING

For interior or exterior doors.
Single acting cylinder in head frame.
Concealed arm and track in door top rail.

MAXIMUM OPENING

Butt hinge template allows 180º, trim permitting. Limited to 110º when optional bumper is installed. Adjustable hold-open points from 85º to 110º, with hold-open track.

Consult factory if door will be held open at 180º.

Offset pivot template allows 115º, trim permitting. Limited to 95º when optional bumper is installed. Hold-open points from 85º, with hold-open track.

Center pivot template allows 120º, trim permitting. Limited to 100º when optional bumper is installed. Adjustable hold-open points from 85º to 100º, with hold-open track.

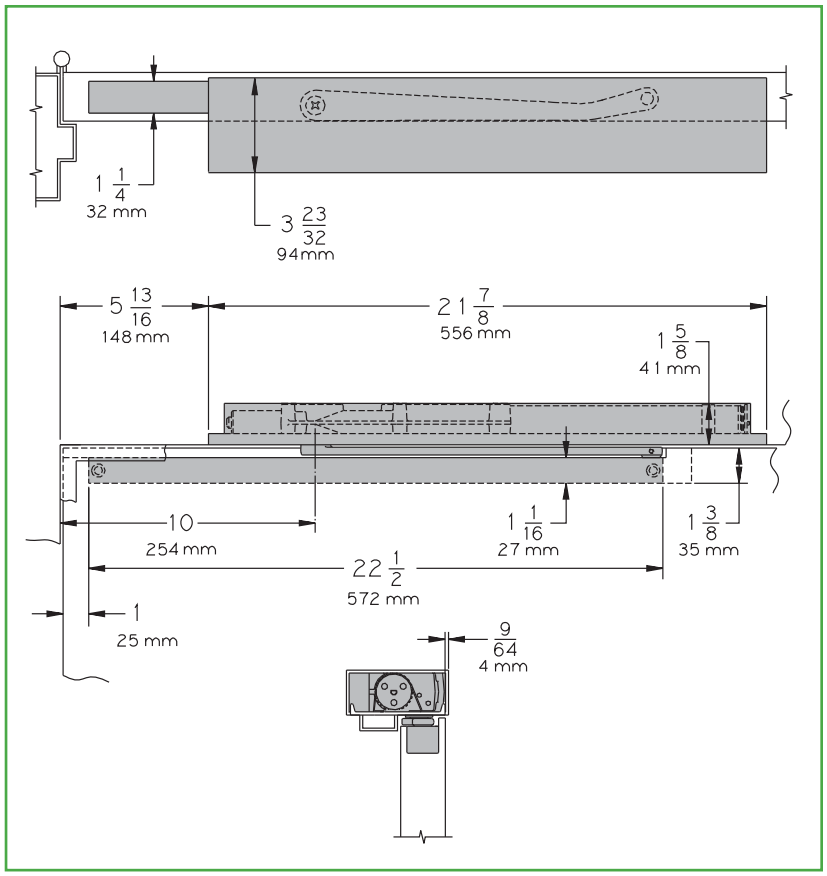

- **Butt Hinges** should not exceed 5″ (127 mm) in width.
- **Auxiliary Stop** is recommended where a door cannot swing 180º. Optional track bumper assembly assists backcheck in cushioning the opening swing of the door. It is not intended to replace an auxiliary stop.
- **Top Rail** 1-3/8″ (35 mm) mortise required. With Fire Shield, 1-13/32″ (36 mm) mortise required. 5/16″ (8 mm) cutout required at top of the door, stop face only.
- **Door Thickness** 1-3/4″ (44 mm) minimum.
- **Hollow Metal Frame** Consult factory for installation instructions.
- **Wood Frame** installation simplified by WOOD MOUNTING CLIP SET 2030-416 for center pivoted or 2030-417 for offset pivoted and butt hung installations. Consult factory for preparation details.

Options

- Standard track with Bumper.
- Hold-open track.
- Hold-open track with Bumper.
- Fire Shield.

Special Templates

Customized installation templates or products may be available to solve unusual applications. Contact LCN Product Support for assistance.

PHONE 877-671-7011
FAX 800-248-1460
www.allegion.com/us
2/14
PDF created by Specworks® Page 20 of 58

Specworks® Cut Ref # LCN_2030 pg 5 of 5
DocuSign Envelope ID: 330DEBD6-9A9E-4F34-BDCC-1AC1BAA701E9

2030 SERIES

TABLE OF SIZES

Select closer based on width of door.
2030 Series cylinders available in size 1, 2, 3, 4, or 5.
Closing power of all 2030 Series closers may be increased 35%.
Specify next higher size closer where strong drafts exist.

EXTERIOR (and VESTIBULE) DOOR WIDTH

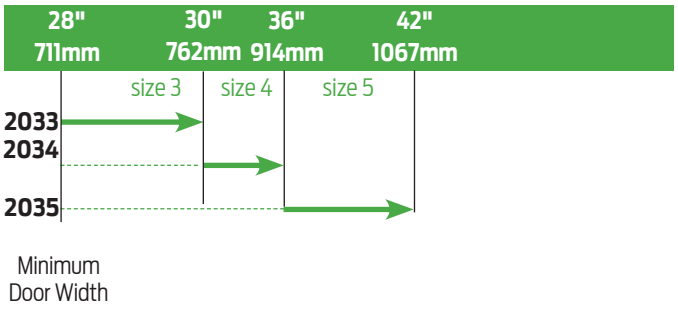

INTERIOR DOOR WIDTH

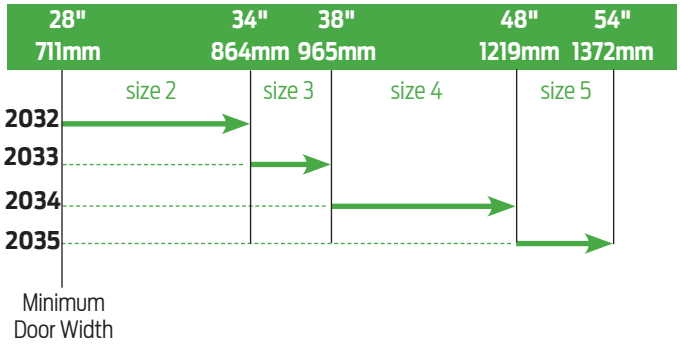

→ Indicates recommended range of door width for closer size.

REDUCED OPENING FORCE 2030 CLOSERS

CAUTION ! Any manual door closer, including those certified by BHMA to conform to ANSI Standard A156.4, that is selected, installed and adjusted based on ADA or other reduced opening force requirements may not provide sufficient power to reliably close and latch a door.

Refer to POWER OPERATORS section for information on systems that meet reduced opening force requirements without affecting closing power.

	DOOR WIDTH	36"	42"	48"
♿	8.5* lbs.	2033	2033	2034
	5.0* lbs.	2031	2032	2032

** Maximum opening force.*

HOW-TO-ORDER 2030 SERIES CLOSERS

1. SELECT CYLINDER SIZE
- ☐ 2031(ADA)
- ☐ 2032
- ☐ 2033
- ☐ 2034
- ☐ 2035

2. SPECIFY HAND
- ☐ RH
- ☐ LH

3. SPECIFY FINISH
- ☐ Standard Powder Coat _____
  Aluminum, Dark Bronze, Statuary, Light Bronze, Black, Brass.

Closer will be shipped with:
- FINISH PLATE,
- TRACK ARM,
- TRACK ROLLER,
- STANDARD TRACK,
- WOOD and MACHINE SCREW PACK,

unless options listed below are selected.

CLOSER OPTIONS

TRACK
- ☐ Standard with Bumper (BUMPER)
- ☐ Hold-open (H)
- ☐ Hold-open with Bumper (HBUMPER)

FINISHES
- ☐ Custom Powder Coat (RAL)_____
- ☐ Plated Finish, US _____
- ☐ SRI primer (use with powder coat finishes only)

SCREW PACK
- ☐ TORX Machine Screw (TORX)

INSTALLATION ACCESSORIES
- ☐ Fire Shield, 2030-420
- ☐ Wood Clip Set, 2030-416
- ☐ Wood Clip Set, 2030-417

SPECIAL TEMPLATE
- ☐ ST-_____

PHONE 877-671-7011
FAX 800-248-1460
www.allegion.com/us
2/14

PDF created by Specworks® Page 23 of 58

Specworks® Cut Ref # LCN_4040XP pg 1 of 9
DocuSign Envelope ID: 330DEBD6-9A9E-4F34-BDCC-1AC1BAA701E9

4040XP SERIES

FEATURES

CLOSER MOUNTS
***HINGE (PULL) SIDE**
TOP JAMB (PUSH SIDE)
PARALLEL ARM (PUSH SIDE)

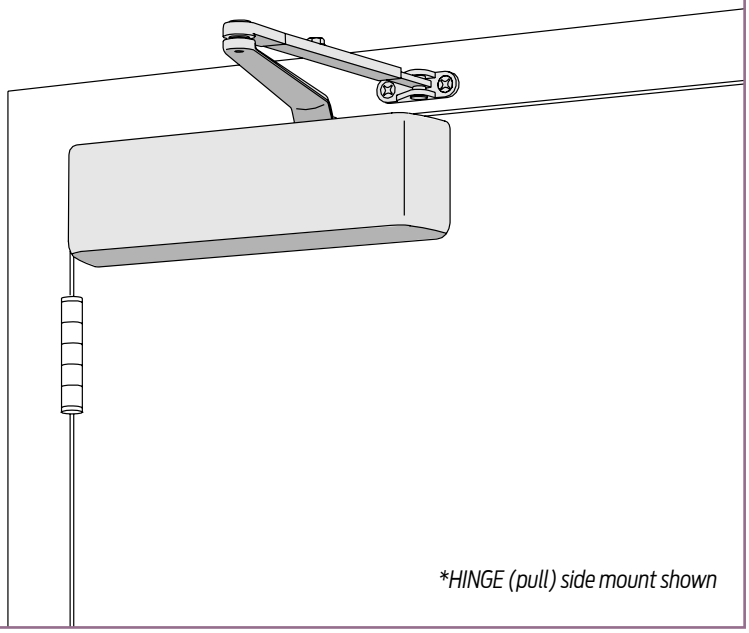

**HINGE (pull) side mount shown*

The 4040XP is LCN's most durable and flexible heavy duty closer designed for institutional and other demanding high traffic applications.

- Cast Iron
- Forged Steel Arm
- Double Heat Treated Steel Pinion
- All Weather Fluid
- Non-Handed
- LCN Patented Green Dial
- Peel-n-Stick Templates for Fast and Accurate Installation
- UL & cUL Listed
- 3/4″ Journal Diameter Pinion
- Full Compliment Bearing

- Standard 4040XP Series closer shipped with regular arm, standard plastic cover, and self reaming and tapping screws.
- Non-sized cylinder is adjustable for interior doors to 5'0" and exterior doors to 4'0".
- Closer mounts hinge side, top jamb, and parallel arm on either right or left swinging doors.
- Closers to meet ADA requirements.
- Standard or optional custom powder coat finish.
- Optional plated finish on cover, arm, and fasteners.
- Optional SRI primer for installations in corrosive conditions. (Available with powder coat finishes only.)
- UL and cUL listed for self-closing doors without hold-open.
- Tested and certified under ANSI Standard A156.4, grade one.

The 4040XP Series includes the
LCN® "Green Dial"
Spring Force Indicator

MOUNTING					FINISH		COVER		CYLINDER					**ARM FUNCTION							
HINGE (PULL) SIDE	TOP JAMB (PULL)	TOP JAMB (PUSH)	PARALLEL ARM	STOP FACE	POWDER COAT	PLATED	PLASTIC	METAL	NON-HANDED	NON-SIZED	ACCESSIBILITY	DELAYED ACTION****	AVB***	REGULAR (DOUBLE)	STANDARD (SINGLE)	HOLD-OPEN	FUSIBLE LINK	EDA/HEDA	CUSH/HCUSH	SCUSH/SHCUSH	DOUBLE EGRESS
●	○	●	●	○	●	●	●	●	●	●	♿	●	○	120°	○	120°	○	180°	110°	110°	○

● AVAILABLE
○ NOT AVAILABLE

♿ *Closer available with less than 5.0 lbs. opening force on 36″ door.*
** *Maximum opening/hold-open point with standard template.*
*** *Advanced Variable Backcheck.*
**** *Delayed Action Closer incorporates standard 4041 Delay Cylinder.*

PHONE 877-671-7011
FAX 800-248-1460
www.allegion.com/us
2/14

Specworks® Cut Ref # LCN_4040XP pg 2 of 9
DocuSign Envelope ID: 330DEBD6-9A9E-4F34-BDCC-1AC1BAA701E9

4040XP SERIES

MOUNTING DETAILS

HINGE (PULL) SIDE MOUNTING

MAXIMUM OPENING

Templating allows up to 120º.

Hold-open points 90º up to 120º with hold-open arm.

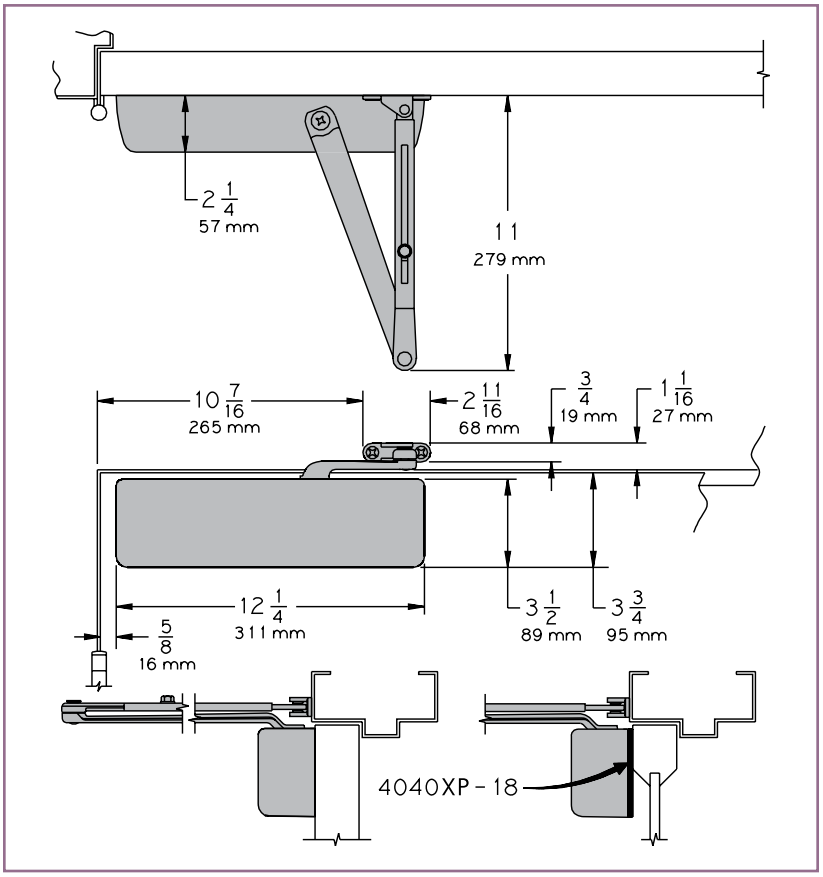

- **Butt Hinges** should not exceed 5" (127 mm) in width.
- **Auxiliary Stop** is recommended at hold-open point or where a door cannot swing beyond 120º.
- **Reveal** should not exceed 3/4" (19 mm) for regular arm or hold-open arm.
- **Top Rail** less than 3-3/4" (95 mm) requires PLATE, 4040XP-18. Plate requires 2" (51 mm) minimum.
- **Clearance** of 2-3/8" (60 mm) behind door required for 90º installation.
- ***Delayed Action** Incorporates standard 4041 cylinder, without XP cylinder. Delays closing from 120º to 70º. Delay time adjustable up to approximately 1 minute.

Options

- 4041 Delayed action cylinder*.
- Hold-open arm.
- Metal cover.

Special Templates

Customized installation templates or products may be available to solve unusual applications. Contact LCN Product Support for assistance.

PHONE 877-671-7011
FAX 800-248-1460
www.allegion.com/us
2/14

PDF created by Specworks® Page 25 of 58

Specworks® Cut Ref # LCN_4040XP pg 5 of 9
DocuSign Envelope ID: 330DEBD6-9A9E-4F34-BDCC-1AC1BAA701E9

4040XP SERIES

4040XP SERIES EDA MOUNT

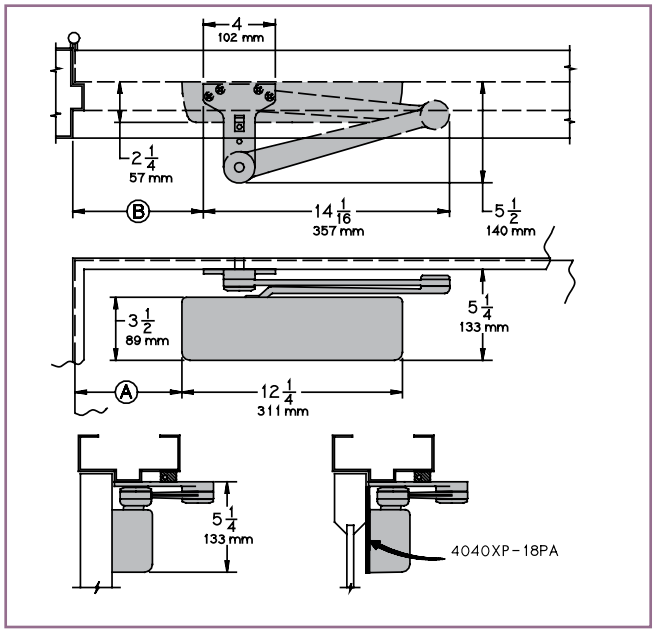

4040XP SERIES CUSH MOUNT

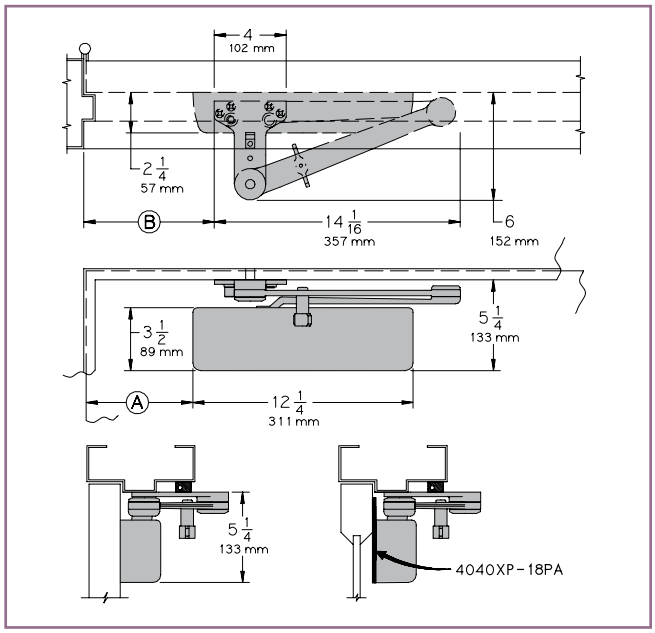

- **Clearance** for 4040XP-62EDA is 5-1/2" (140 mm) from door face. 6" (152 mm) for CUSH.
- **Head Frame** flush or rabetted requires CUSH FLUSH PANEL ADAPTER, 4040XP-419.
- **CUSH ARM** requires SHOE SUPPORT, 4040XP-30 for fifth screw anchorage for narrow frames.
- ***Delayed Action** Incorporates standard 4041 cylinder, without XP cylinder. Delays closing from maximum opening to ; 115˚ with 180˚ template, 95˚ with 110˚ template, 85˚ with 100˚ template, 75˚ with 90˚ template. Delay time adjustable up to approximately 1 minute.

Mounting details are the same as 4040XP Series REGULAR or HOLD-OPEN except as listed below. 4040XP Series closers ordered with EDA or CUSH arms include 4040XP-201 FIFTH HOLE SPACER to support the shoe.

MAXIMUM OPENING

EDA arm can be templated for points at: 110º,
Ⓐ = 6-3/8" (162 mm)
Ⓑ = 7-3/4" (197 mm)
or 180º.
Ⓐ = 2-7/8" (73 mm)
Ⓑ = 4-1/4" (108 mm)
Hold-open points up to maximum opening with HEDA arm.

CUSH arms can be templated for opening/hold-open point at:
85º,
Ⓐ = 7-15/16" (202 mm)
Ⓑ = 9-1/8" (232 mm)
90º,
Ⓐ = 7-3/16" (183 mm)
Ⓑ = 8-1/2" (216 mm)
100º,
Ⓐ = 6-1/16" (154 mm)
Ⓑ = 7-1/4" (184 mm)
or 110º.
Ⓐ = 5-1/16" (129 mm)
Ⓑ = 6-3/8" (162 mm)

Spring Cush dead stop points are approximately 5˚ more than templated stop point. Hold open at templated stop points.

PHONE 877-671-7011
FAX 800-248-1460
www.allegion.com/us
2/14
PDF created by Specworks® Page 28 of 58

Specworks® Cut Ref # LCN_4040XP pg 9 of 9
DocuSign Envelope ID: 330DEBD6-9A9E-4F34-BDCC-1AC1BAA701E9

4040XP SERIES

TABLE OF SIZES

4040XP cylinders are adjustable from size 1 through size 6 and is shipped set to size 3.
Closing power of 4040XP Series closers may be adjusted 50%.

EXTERIOR (and VESTIBULE) DOOR WIDTH

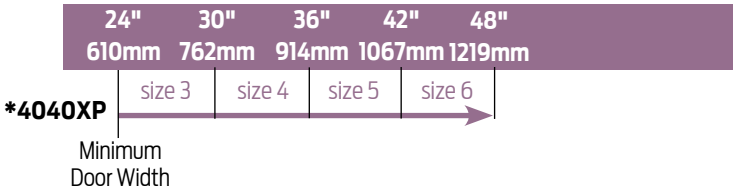

INTERIOR DOOR WIDTH

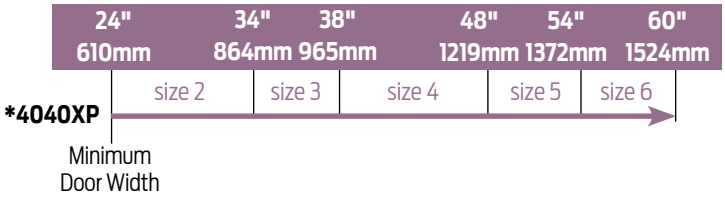

→ Indicates recommended range of door width for closer size.

** Adjustable Size 1 thru 6.*

REDUCED OPENING FORCE 4040XP SERIES CLOSERS

CAUTION ! Any manual door closer, including those certified by BHMA to conform to ANSI Standard A156.4, that is selected, installed and adjusted based on ADA or other reduced opening force requirements may not provide sufficient power to reliably close and latch a door.

Refer to POWER OPERATORS section for information on systems that meet reduced opening force requirements without effecting closing power.

	DOOR WIDTH	36"	42"	48"
♿	8.5* lbs.	4040XP	4040XP	4040XP
	5.0* lbs.	4040XP	4040XP	4040XP

** Maximum opening force.*

HOW-TO-ORDER 4040XP SERIES CLOSERS

1. SELECT FINISH

☐ Standard Powder Coat _____
Aluminum, Dark Bronze, Statuary, Light Bronze, Black, Brass.

Closer will be shipped with:
- STANDARD CLIP-ON COVER
- SPECIFY ARM WHEN ORDERING
- SELF-REAMING and TAPPING SCREWS,

unless options listed below are selected.

CLOSER OPTIONS

CYLINDER
☐ Delayed Action (4041 DEL)

COVER
☐ Metal (specify right or left hand) (MC)

FINISH
☐ Custom Powder Coat (RAL) _____
(handed metal cover required)
☐ Plated Finish, US _____
(handed metal cover required)
☐ SRI primer (use with powder coat finishes only)

ARM
☐ Regular (REG)
☐ Regular w/62PA (Rw/PA)
☐ Regular w/62A (R/62A)
☐ Long (LONG)
☐ Extra Long (XLONG)
☐ Hold-Open (H)
☐ Hold-Open w/62PA (Hw/PA)
☐ Long Hold-Open (HLONG)
☐ Extra Duty Arm (EDA)
☐ Extra Duty Arm with 62G (EDA/62G)
☐ Hold Open Extra Duty Arm (HEDA) (Handed)
☐ Hold Open Extra Duty Arm with 62(HEDA/62G)(Handed)
☐ Cush-N-Stop (CUSH)
☐ HCush-N-Stop (HCUSH)
☐ Spring Cush (SCUSH)
☐ Spring HCush (SHCUSH)

OPTIONAL SCREW PACKS
☐ TB* w/Self-Reaming and Tapping (TBSRT)
☐ Wood & Machine Screw (WMS)
☐ TB*, Wood & Machine Screw (TBWMS)
☐ TORX Machine Screw (TORX)
☐ TB* & TORX Machine Screw (TBTRX)
** Specify door thickness if other than 1-3/4˝.*

INSTALLATION ACCESSORIES
☐ Plate, 4040XP-18
☐ Plate, 4040XP-18TJ
☐ Plate, 4040XP-18G
☐ Plate, 4040XP-18PA
☐ CUSH Shoe Support, 4040XP-30
☐ Blade Stop Spacer, 4040XP-61
☐ Auxiliary Shoe, 4040XP-62A
☐ PA Flush Panel Adapter, 4040XP-419

SPECIAL TEMPLATE
☐ ST- _____

PHONE 877-671-7011
FAX 800-248-1460
www.allegion.com/us
2/14

Specworks® Cut Ref # NGP_0010 pg 1 of 1
DocuSign Envelope ID: 330DEBD6-9A9E-4F34-BDCC-1AC1BAA701E9

Smoke and Draft Control Gasketing - Category 'H' Listed:

All items this page: 10C BHMA CERTIFIED

For use on 'S' Label Doors

Self-Adhesive Silicone bulbs

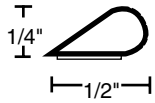

5050

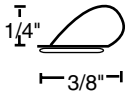

2525

5050B	Brown	2525B	Brown
5050C	Charcoal	2525C	Charcoal
5050W	White	2525W	White
5050T	Tan	2525T	Tan
5050CL	Clear		

Available in 17', 20', 21', 25', and 300' rolls

Self-Adhesive Batwing seal

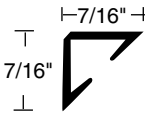

Warnock Hersey

5020

5020B Brown
5020C Charcoal
5020W White

Available in 36", 48", 84", 96" and 108" lengths

Self-Adhesive Silicone seal

5060

5060B Brown
5060CL Clear

Available in 7', 8', 9', 17' and 21' rolls

Neoprene or Silicone bulb seals

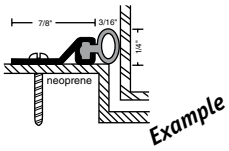

135NA
135NB
135NDKB

Neoprene		Silicone	
129N	172N	137S	170S
135N	129NBR	152S	172S
137N	129NSS	155S	700S
138N	700N	156S	700ES
161N	700EN	160S	9002
170N		161S	9700
		162S	9700E

Neoprene or Silicone sponge seals

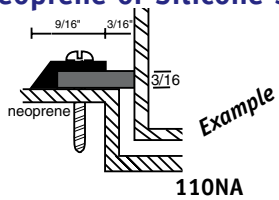

110NA
110NB
110NDKB

Neoprene		Silicone
108N	165N	110S
110N	120NBR	120S
120N	122NBR	127S
122N	130NBR	130S
127N	120NSS	134S
130N	122NSS	165S
131N	127NSS	9001
132N	130NSS	9004
133N		
134N		

Adjustable Neoprene or Silicone Seals

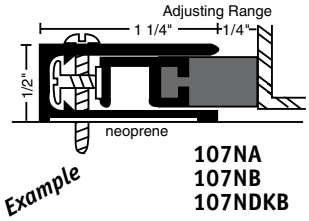

107NA
107NB
107NDKB

Neoprene		Silicone
103N	303N	107S
104N	304N	
106N	1038N	
107N	3038N	
141N		

See our catalog page or website for illustrations and details on above products

PDF created by Specworks® Page 33 of 58

Specworks® Cut Ref # NGP_0016 pg 1 of 1
DocuSign Envelope ID: 330DEBD6-9A9E-4F34-BDCC-1AC1BAA701E9

Offset Thresholds

All products this page.

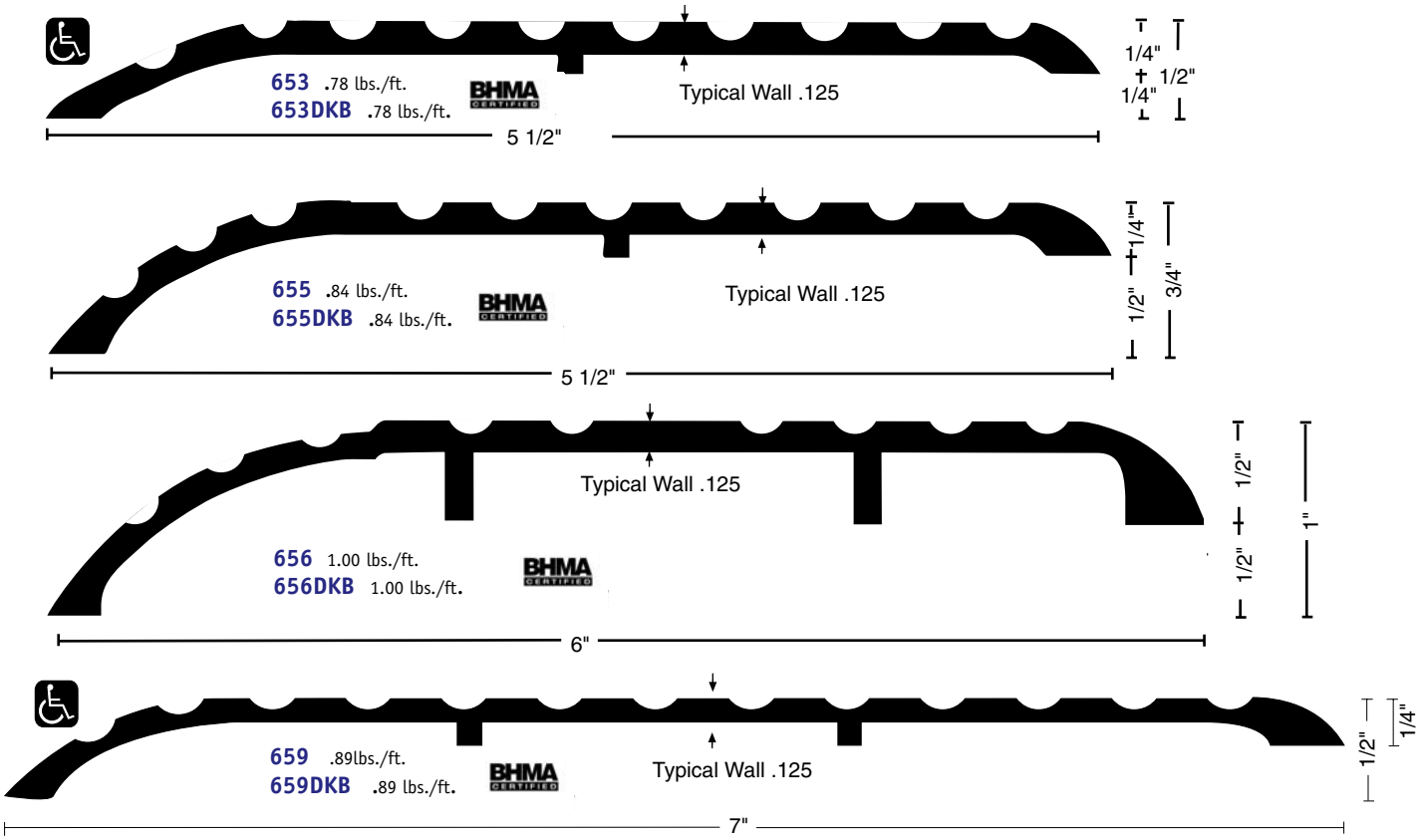

Carpet Dividers/Carpet Edges

Carpet Dividers

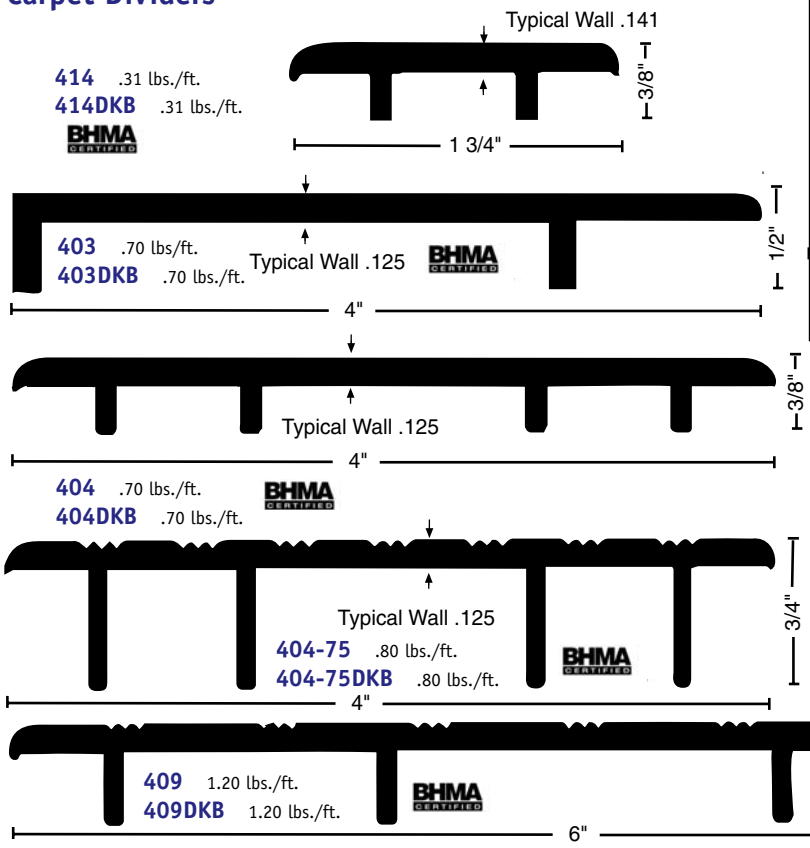

Carpet Edges

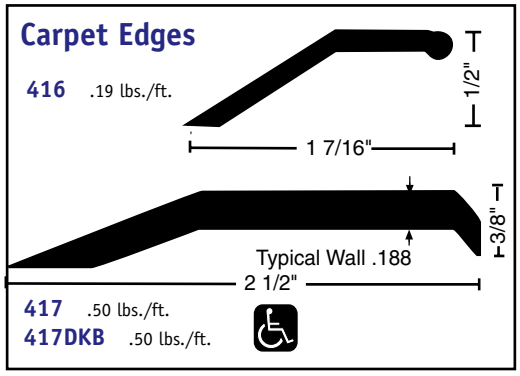

Specworks® Cut Ref # NGP_0068 pg 1 of 1
DocuSign Envelope ID: 330DEBD6-9A9E-4F34-BDCC-1AC1BAA701E9

Finned Vinyl Door Shoes

This page OK for use on 'S' label doors.

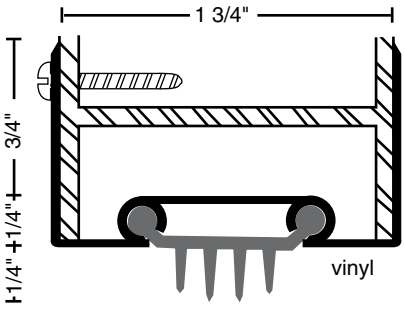

35EV
35EVDKB

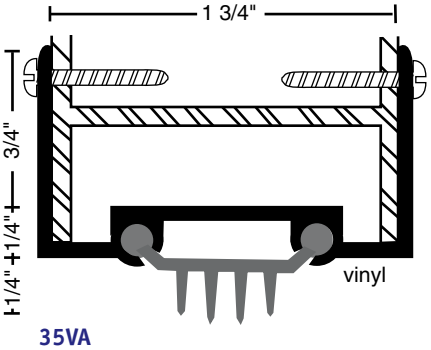

35VA
35VB
35VDKB

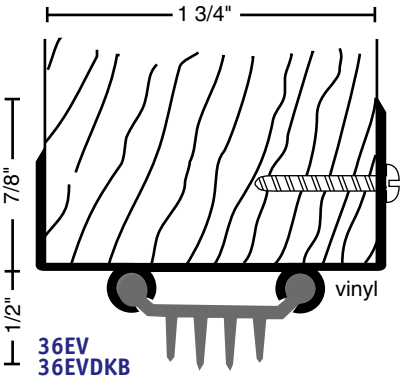

36EV
36EVDKB

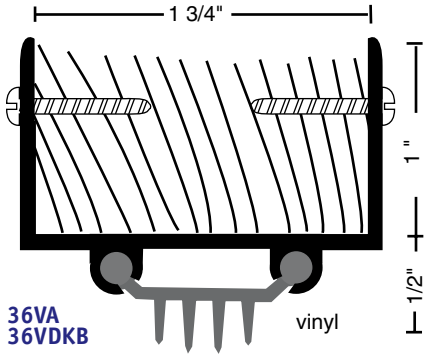

36VA
36VDKB

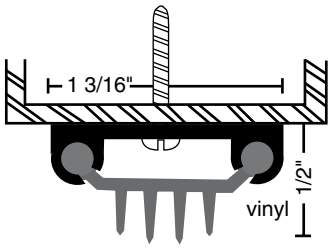

312V
312VDKB

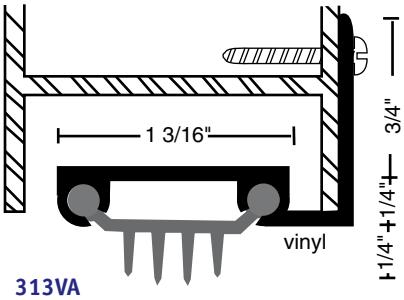

313VA
313VDKB

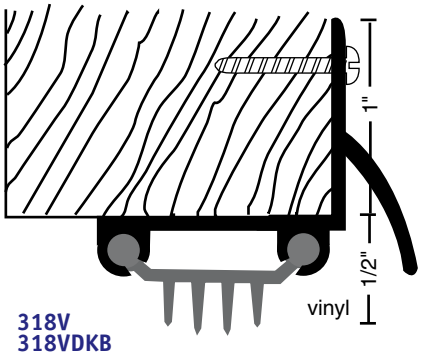

318V
318VDKB

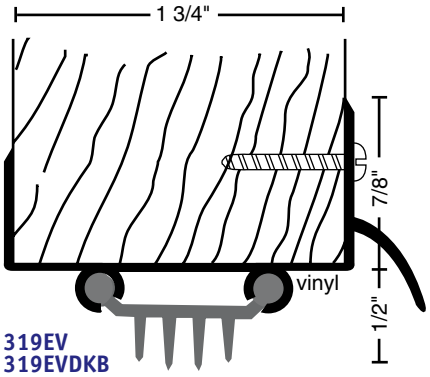

319EV
319EVDKB

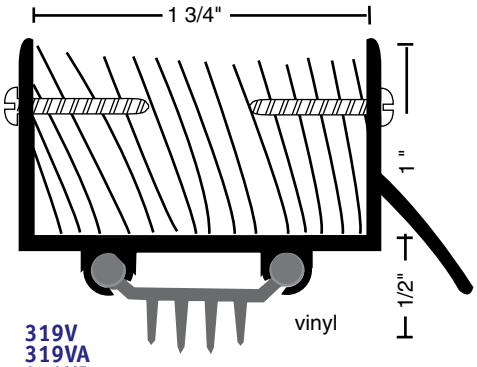

319V
319VA
319VB
319VDKB

Nylon Brush Door Shoe

NEW!

95WH
95WHDKB

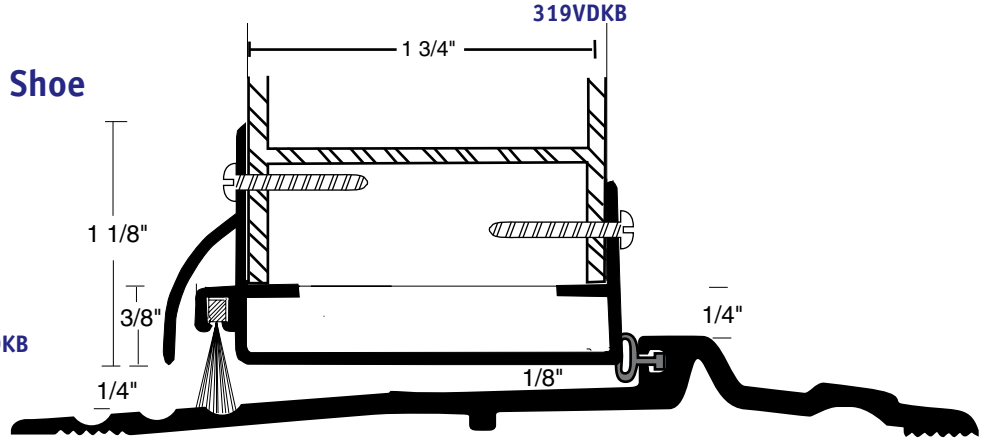

A - clear
B - gold
DKB - dark bronze
vinyl is gray
vinyl on DKB is brown

Designed for use on standard 3/4" undercut door used with NGP 896 ADA compliant threshold as shown

PDF created by Specworks® Page 35 of 58

Specworks® Cut Ref # SCH_0011 pg 1 of 22
DocuSign Envelope ID: 330DEBD6-9A9E-4F34-BDCC-1AC1BAA701E9

L-Series

Commercial Locks

Nothing is tougher.

At Schlage we know that every product you specify has to stand up to constant use and abuse. Your building's locking systems face an additional challenge – keeping people and other assets safe while delivering constant, reliable performance. Schlage L-Series Extra Heavy Duty Mortise Locks are built to withstand the rigors of daily use without fail.

We don't compromise on security.

The safety and security of your clients' buildings is something we take very seriously. That's why every Schlage lock and deadbolt undergoes intensive testing to determine its ANSI grade level:

- Cycle tests
- Door impact tests
- Bolt strength tests
- Resistance tests
- Warped door tests

We pay attention to these details so you can focus on creating a functional and aesthetically pleasing environment for your clients. In fact, every one of our L-Series locks meets ANSI Grade 1 standards for safety.

PDF created by Specworks® Page 36 of 58

Specworks® Cut Ref # SCH_0011 pg 2 of 22
DocuSign Envelope ID: 330DEBD6-9A9E-4F34-BDCC-1AC1BAA701E9

SCHLAGE

Real Security Sets You Free.™

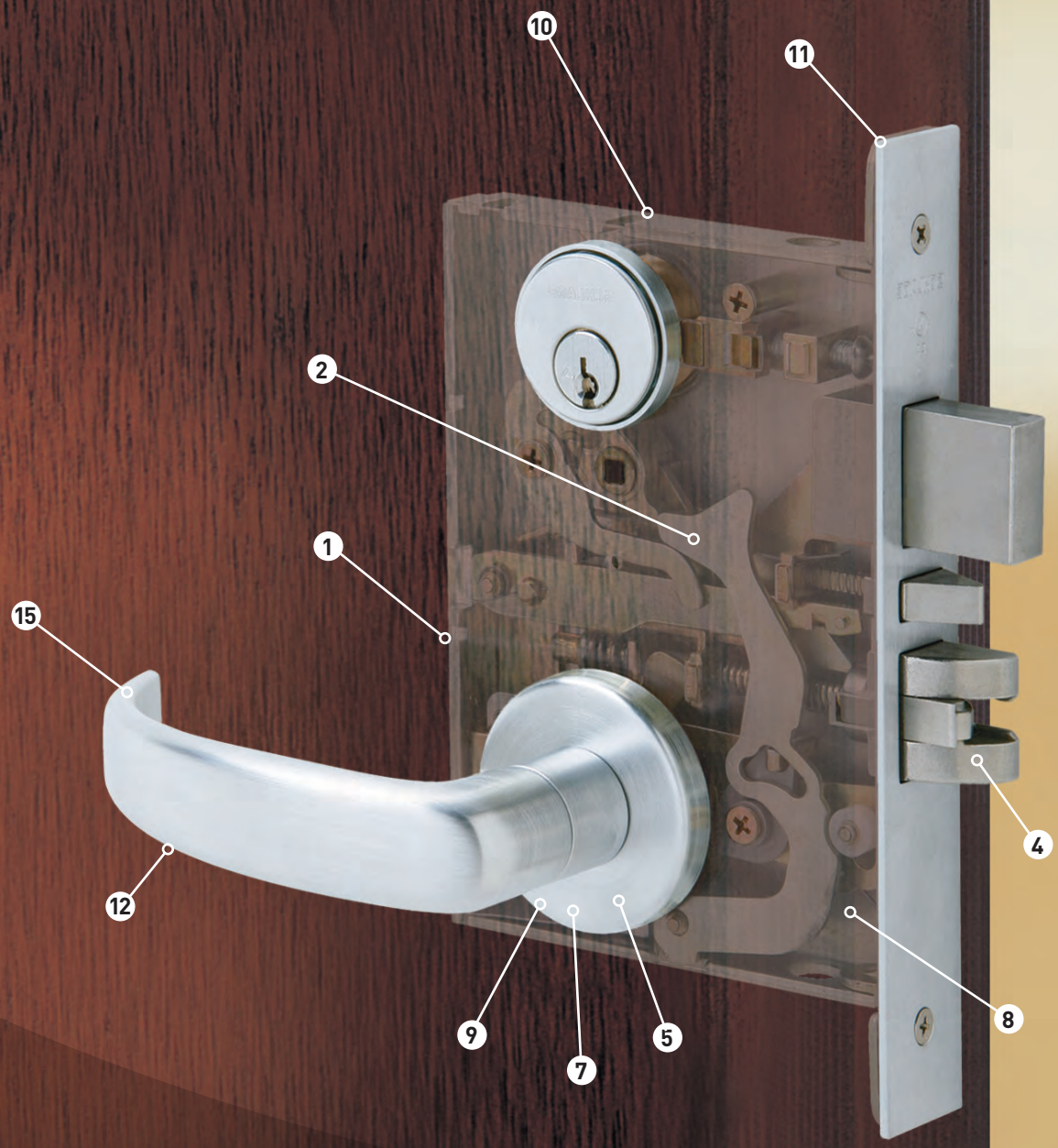

Vandlgard®

The L-Series Vandlgard is ideal for areas subject to abuse or anywhere vandalism is likely to be present. Vandlgard prevents damage to internal lock components caused by excessive force from kicking, hitting or standing on the lever to gain access.

It's easy to retrofit standard L-Series locks with Vandlgard using the Vandlgard Retrofit Kit and an instructional DVD that shows installation on existing hardware.

PDF created by Specworks® Page 37 of 58

Specworks® Cut Ref # SCH_0011 pg 5 of 22
DocuSign Envelope ID: 330DEBD6-9A9E-4F34-BDCC-1AC1BAA701E9

06
Material: Forged brass, bronze and cast stainless steel **Finishes:** 605, 606, 609, 610, 611, 612, 613, 616, 619, 625, 626, 629, 630

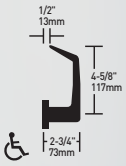

07
Material: Forged brass, bronze and cast stainless steel **Finishes:** 605, 606, 609, 610, 611, 612, 613, 616, 619, 625, 626, 629, 630

12
Materials: Forged brass, bronze and cast stainless steel **Finishes:** 605, 606, 609, 610, 611, 612, 613, 616, 619, 625, 626, 629, 630 Specify door hand

Finish Key

605
Bright Brass

606
Satin Brass

609
Antique Brass

610
Bright Brass, Blackened

611
Bright Bronze

612
Satin Bronze

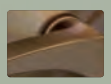
613
Oil Rubbed Bronze

616
Antique Bronze

619
Satin Nickel

625
Bright Chromium Plated

626
Satin Chromium Plated

629
Bright Stainless Steel

630
Satin Stainless Steel

PDF created by Specworks® Page 40 of 58

Specworks® Cut Ref # SCH_0011 pg 10 of 22
DocuSign Envelope ID: 330DEBD6-9A9E-4F34-BDCC-1AC1BAA701E9

Escutcheons and Roses

Choose from three types of escutcheon and two rose sizes to add tough, durable performance to your lockset.

Escutcheons

L Full Face
Material: Cold-forged brass, bronze or stainless steel
Finishes: 605, 606, 612, 613, 619, 625, 626, 629, 630
Size: 8" x 1 ¾" x 7/16"
(203 mm x 44 mm x 11mm)

L Concealed
Material: Cold-forged brass, bronze or stainless steel
Finishes: 605, 606, 612, 613, 619, 625, 626, 629, 630
Size: 8" x 1 ¾" x 7/16" (203 mm x 44 mm x 11 mm)

N Escutcheon
Material: Heavy wrought reinforced brass, bronze or stainless steel
Finishes: 605, 606, 612, 613, 619, 625, 626, 629, 630
Size: 8" x 2 9/16" x 7/16"
(203 mm x 65 mm x 11 mm)

Roses

A Wrought Rose
2 1/8" (54 mm) diameter
Available for use on L-Series knob and lever designs.
Order by letter designation corresponding to the design and diameter desired.

B Wrought Rose
2 9/16" (65 mm) diameter
Available for use on L-Series knob and lever designs.
Order by letter designation corresponding to the design and diameter desired.

PDF created by Specworks® Page 45 of 58

Specworks® Cut Ref # SCH_0011 pg 11 of 22
DocuSign Envelope ID: 330DEBD6-9A9E-4F34-BDCC-1AC1BAA701E9

Thumbturns

Choose from three variations of thumbturn locks that help you meet the demands of specialized commercial projects.

Hotel Occupancy Indicator
09-611
For lock function L9486P, this unit can be used with A or B roses. Requires a 1⅜" (35 mm) cylinder for 1¾" (44 mm) doors. Specify finish when ordering separately.

Optional EZ Turn
L583-363
Available for rose and escutcheon trim. Disability turn (ADA) option to standard thumbturn. Can be used with thumbturn-function L-Series lock except L9463 and L463. Specify lock per L583-363 when ordering.

Coin Turn
For lock functions L9044 and L9444 with rose trim. Specify 09-509 and finish per L283-124 when ordering.

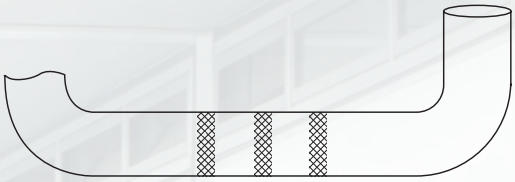

03 Lever Shown

Tactile Warning (Knurling)

Schlage L-Series commercial levers feature knurling only on the outside lever unless otherwise specified. This feature is available on the following lever models: 01, 02, 03, 05, 06, 07, 12, 17, 18, 41, 42 and 93.

Products featuring a knurled surface will be indicated by adding the prefix "8" to the model number. For example, L905P 803/03A.

PDF created by Specworks® Page 46 of 58

Specworks® Cut Ref # SCH_0011 pg 12 of 22
DocuSign Envelope ID: 330DEBD6-9A9E-4F34-BDCC-1AC1BAA701E9

Lock Functions

Lock Components

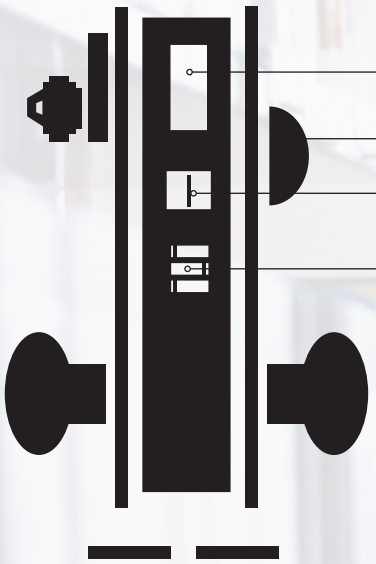

Symbol Key

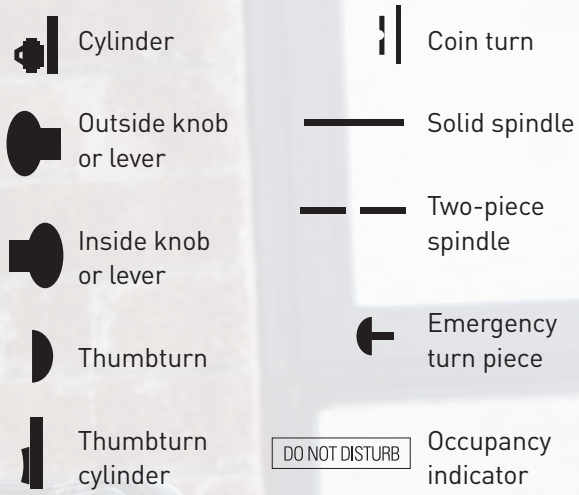

Product Identification Guide

L/LV 9 4 5 3 P

Lock series
L = standard
LV = vandlgard

0 = dummy trim without lock case
9 = functions with lock case

0 = no deadbolt
1 = dummy trim
4 = with deadbolt

Function

Cylinder Suffix
P = 6-pin full-face mortise cylinder with Schlage logo*
L = less full-face cylinder
C = concealed mortise cylinder
W = less concealed cylinder
R = full-size interchangeable core with Schlage logo
J = less full-size interchangeable core
F = full-size interchangeable core less Schlage logo
T = full-size construction core
BD = SFIC less core
BDC = disposable SFIC
GD = Everest patented SFIC
HD = construction SFIC

SFIC = Small Format (Best® style) Interchangeable Core

To order less Schlage logo, specify lock "with K510-612 faceplate."

LV = Vandlgard® function allows exterior lever to rotate freely down while remaining securely locked.

PDF created by Specworks® Page 47 of 58

Specworks® Cut Ref # SCH_0011 pg 13 of 22
DocuSign Envelope ID: 330DEBD6-9A9E-4F34-BDCC-1AC1BAA701E9

Lock Functions | ANSI A156.13, Series 1000

Schlage **ANSI**

L9010 **F01**
Passage Latch
Latchbolt retracted by knob/lever from either side at all times. Inside lever is always free for immediate egress.

L9040 **F22**
LV9040
Bath/Bedroom Privacy Lock
Latchbolt retracted by knob/lever from either side unless outside is locked by inside thumbturn. Turning inside knob/lever or closing door unlocks outside knob/lever. To unlock from outside remove emergency button, insert emergency thumbturn (furnished) in access hole and rotate. Inside lever is always free for immediate egress.

L9044
LV9044
Privacy With Coin Turn Outside
Latchbolt retracted by knob/lever from either side unless outside is locked by inside thumbturn or outside coin turn. Operating inside knob/lever, closing door, rotating inside thumbturn or rotating outside cointurn unlocks outside knob/lever. Specify per L283-056 for Torx® screws. Available with rose trim only. (Previously XL11-868)

L9440
LV9440 **F19**
Privacy With Deadbolt
Latchbolt retracted by knob/lever from either side. Deadbolt thrown or retracted by inside thumbturn. Throwing deadbolt locks outside knob/lever. Rotating inside knob/lever simultaneously retracts deadbolt and latchbolt, and unlocks outside knob/lever. To unlock from outside remove emergency button, insert emergency thumbturn in access hole and rotate. Inside liner is always free for immediate egress. (Previously XL11-761.)

Schlage **ANSI**

L9444
LV9444
Privacy with Deadbolt and Coin Turn Outside
Latchbolt retracted by knob/lever from either side. Deadbolt thrown or retracted by inside thumbturn or outside coin turn. Throwing deadbolt locks outside knob/lever. Rotating inside knob/lever simultaneously retracts deadbolt and latchbolt, and unlocks outside knob/lever. Rotating outside coin turn retracts deadbolt and unlocks outside knob/lever. Specify per L283-056 for Torx screws. Available with rose trim only. Inside lever is always free for immediate egress. (Previously XL11-868)

L0170
Half Dummy Trim
Knob/lever on one side fixed by mounting bar.

L0172
Full Dummy Trim
Knob/lever on both sides fixed by mounting bar.

L9175
Half Dummy Trim with Lock Case
Fixed knob/lever on one side inoperable. Includes lock case and armored front. Options same as L9176 below.

L9176
Full Dummy Trim with Lock Case*
Fixed knob/lever on both sides. Includes lock case and blank armor front. May be ordered with optional XL11-743 armored front with cutout to receive deadbolt.

*In a double-door application where the dummy will be used as the strike order 10-091 Armored Front Strike separately.

Caution: Double cylinder locks on residences and any door in any structure which is used for egress are a life safety hazard in times of emergency and their use is not recommended. Installation should be in accordance with existing codes only.

PDF created by Specworks® Page 48 of 58

Specworks® Cut Ref # SCH_0011 pg 14 of 22
DocuSign Envelope ID: 330DEBD6-9A9E-4F34-BDCC-1AC1BAA701E9

Lock Functions | Single Cylinder Non-Deadbolt Functions

Schlage **ANSI**

L9050 **F04**
LV9050
Office and Inner Entry Lock
Latchbolt retracted by knob/lever from either side unless outside is made inoperative by key outside or by turning inside thumbturn. When outside is locked, latchbolt is retracted by key outside or by knob/lever inside. Outside knob/lever remains locked until thumbturn is returned to vertical or unlocked by key. Auxiliary latch deadlocks latchbolt when door is closed. Inside liner is always free for immediate egress.

L9056
LV9056
L9050 with Automatic Unlocking
Latchbolt retracted by knob/lever from either side unless outside is made inoperative by key outside or by rotating inside thumbturn. Outside knob/lever unlocked by key outside, thumbturn or closing door. Rotating inside knob/lever simultaneously retracts latchbolt and unlocks outside knob/lever. Auxiliary latch deadlocks latchbolt when door is closed. Inside lever is always free for immediate egress.

L9060 **F09**
LV9060
Apartment Entrance Lock
Latchbolt retracted by knob/lever from either side unless outside is locked by key from inside. When locked, latchbolt retracted by key outside or knob/lever inside. Auxiliary latch deadlocks latchbolt when door is closed. Inside lever is always free for immediate egress.

L9070 **F05**
LV9070
Classroom Lock
Latchbolt retracted by knob/lever from either side unless outside is locked by key. Unlocked from outside by key. Inside knob/lever always free for immediate exit. Auxiliary latch deadlocks latchbolt when door is closed. Inside lever is always free for immediate egress.

L9071
LV9071
Classroom Security Lock
Latchbolt retracted by knob/lever from either side unless outside is locked by key from either side. When locked, latchbolt retracted by key outside or knob/lever inside. Auxiliary latch deadlocks latchbolt when door is locked. Inside lever is always free for immediate egress.

Schlage **ANSI**

L9076 **F06**
LV9076
Classroom Holdback Lock
Latchbolt retracted by knob/lever from either side unless outside is locked by key. When locked, latchbolt retracted by key outside or knob/lever inside. Auxiliary latch deadlocks latchbolt when door is closed. Depress inside knob/lever and turn key 360º for holdback feature. Inside lever is always free for immediate egress.

L9077
LV9077
Classroom Security Holdback Lock
Latchbolt retracted by knob/lever from either side unless outside is locked by key from either side. When locked, latchbolt retracted by key outside or knob/lever inside. Auxiliary latch deadlocks latchbolt when door is locked. Depress inside knob/lever and turn key 360º for holdback feature. Inside lever is always free for immediate egress.

L9080 **F07**
LV9080
Storeroom Lock
Latchbolt retracted by key outside or by knob/lever inside. Outside knob/lever is always inoperative. Auxiliary latch deadlocks latchbolt when door is closed. Inside lever is always free for immediate egress.

L9080EL
LV9080EL
Electrically Locked (Fail Safe)
Outside knob/lever continuously locked by 24V AC or DC. Latchbolt retracted by key outside or by knob/lever inside. Switch or power failure allows outside knob/lever to retract latchbolt. Auxiliary latch deadlocks latchbolt when door is closed. Inside knob/lever always free for immediate exit. Inside lever is always free for immediate egress.

L9080EU
LV9080EL
Electrically Unlocked (Fail Secure)
Outside knob/lever unlocked by 24V AC or DC. Latchbolt retracted by key outside or knob/lever inside. Auxiliary latch deadlocks latchbolt when door is closed. Inside knob/lever always free for immediate exit. Inside lever is always free for immediate egress.

L9080EL-RX
L9080EU-RX
Request to Exit (RX) Electrified Lock
Same as L9080EL and L9080EU functions. In addition, a micro-switch positioned inside the lock case monitors the retractor crank, and is actuated when rotation of the inside or outside knob/levers rotates the retractor hub. The switch signals the use of that opening to security systems, allowing a non-disruptive means of immediate egress. Specify per L283-059 for normally closed contacts (default). Specify L283-125 for normally open contacts. Inside lever is always free for immediate egress. (Previously XL11-807)

PDF created by Specworks® Page 49 of 58

Specworks® Cut Ref # SCH_0011 pg 15 of 22
DocuSign Envelope ID: 330DEBD6-9A9E-4F34-BDCC-1AC1BAA701E9

Lock Functions | Single Cylinder Deadbolt Functions

Schlage **ANSI**

L9082 **F30**
LV9082
Institution Lock*
Latchbolt retracted by key from either side. Knob/lever on both sides always inoperative. Auxiliary latch deadlocks latchbolt when door is closed.

L9082EL
L9082EU
L9082 Electrically Locked or Electrically Unlocked Both Sides*
EL: Outside and inside knob or lever continually locked electrically. Latchbolt retracted by key either side. Switch or power failure allows outside and inside knob/lever to retract latchbolt. Auxiliary latch deadlocks latchbolt when door is closed. EU: Outside and inside knob/lever unlocked electrically. Latchbolt retracted by key either side. Switch or power failure keeps inside and outside knob/lever locked. Auxiliary latch deadlocks latchbolt when door is closed. (Previously XL11-452)

L9453 **F20**
LV9453
Entrance Lock
Latchbolt retracted by knob/lever from either side unless outside is locked by 20º rotation of thumbturn. Deadbolt thrown or retracted by 90º rotation of thumbturn. When locked, key outside or knob/lever inside retracts deadbolt and latchbolt simultaneously. Outside knob/lever remains locked until thumbturn is restored to vertical position. Throwing deadbolt automatically locks outside knob/lever. Auxiliary latch deadlocks latchbolt when door is closed. Inside lever is always free for immediate egress.

L9456 **F13**
LV9456
Corridor Lock
Latchbolt retracted by knob/lever from either side. Deadbolt thrown or retracted by key outside or inside thumbturn. Throwing deadbolt locks outside knob/lever. Turning inside knob/lever simultaneously retracts deadbolt and latchbolt and unlocks outside knob/lever. Inside lever is always free for immediate egress.

L9457
LV9457
Classroom Security Lock
Latchbolt retracted by knob/lever from either side. Deadbolt thrown or retracted by key from either side. Throwing deadbolt locks outside knob/lever. Turning inside knob/lever simultaneously retracts deadbolt and latchbolt, and unlocks outside knob/lever. Inside lever is always free for immediate egress.

Schlage **ANSI**

L9465
Closet/Storeroom Lock
Latchbolt retracted by knob/lever from either side. Deadbolt thrown or retracted by key outside.

L9466 **F14**
Store/Utility Room Lock*
Latchbolt retracted by knob/lever from either side. Deadbolt thrown or retracted by key from either side.

L9473 **F21**
Dormitory/Bedroom Lock
Latchbolt retracted by knob/lever from either side. Deadbolt thrown or retracted by key outside or thumbturn inside.

L9482
LV9482
Institution Lock with Deadbolt*
Latchbolt retracted by key from either side. Knob/lever on both sides always inoperative. Deadbolt thrown or retracted by key either side. Auxiliary latch deadlocks latchbolt when door is closed. Specify per XL11-543.

L9485
LV9485
Prison Function Lock
Latch retracted by key outside or knob inside. Outside knob always free spinning. Deadbolt only thrown or retracted by guard's key. Inside knob becomes fixed when deadbolt is thrown. Prisoner's key only retracts latchbolt. Furnished standard with tamper-resistant Torx screws. Specify per XL11-557.

L9480
LV9480
Storeroom Lock With Deadbolt
Latchbolt retracted by key outside or by lever or knob inside. Outside knob/lever always fixed. Deadbolt thrown or retracted by key outside or thumbturn inside. Turning inside knob/lever simultaneously retracts both deadbolt and latchbolt. Auxiliary latch deadlocks latchbolt when door is closed. Inside lever is always free for immediate egress. (Previously XL11-591)

*In a double-door application where the dummy will be used as the strike order 10-091 Armored Front Strike separately

Caution: Double cylinder locks on residences and any door in any structure which is used for egress are a life safety hazard in times of emergency and their use is not recommended. Installation should be in accordance with existing codes only.

PDF created by Specworks® Page 50 of 58

Specworks® Cut Ref # SCH_0011 pg 16 of 22
DocuSign Envelope ID: 330DEBD6-9A9E-4F34-BDCC-1AC1BAA701E9

Lock Functions |

Double Cylinder Non-Deadbolt Functions

Schlage **ANSI**

L9485
LV9485
Hotel or Restroom Lock
Latchbolt retracted by key outside or by knob/lever inside. Outside knob/lever always fixed. Deadbolt thrown or retracted by inside thumbturn. When deadbolt is thrown all keys become inoperative except emergency or display keys. Turning inside knob/lever retracts both deadbolt and latchbolt simultaneously. Auxiliary latch deadlocks latchbolt when door is closed. Inside lever is always free for immediate egress.

L9486 **F15**
LV9486
Hotel or Restroom Lock with "Do Not Disturb" Indicator
Latchbolt retracted by key outside or by knob/lever inside. Outside knob/lever always fixed. Deadbolt thrown or retracted by inside thumbturn. When deadbolt is thrown "Do Not Disturb" plate is displayed. All keys become inoperative except emergency or display keys. Turning inside knob/lever retracts both deadbolt and latchbolt simultaneously. Auxiliary latch deadlocks latchbolt when door is closed. Inside lever is always free for immediate egress.

L9486 x L583-375
LV9486 x L583-375
L9486 with "Occupied" Indicator
Latchbolt retracted by key outside or by knob/lever inside. Outside knob/lever always fixed. Deadbolt thrown or retracted by inside thumbturn. When deadbolt is thrown "Occupied" plate is displayed and all keys become inoperative except emergency keys. Turning inside knob/lever simultaneously retracts both deadbolt and latchbolt. Auxiliary latch deadlocks latchbolt when door is closed. Inside lever is always free for immediate egress. (Previously XL11-580)

Lock Functions |

Double Cylinder Deadbolt Functions

Schlage **ANSI**

L9496
Privacy with "Occupied" Indicator
Knob/lever retracts latchbolt from either side. Deadbolt thrown or retracted by key outside (retraction by key required in the event of an emergency) or inside thumbturn. Throwing deadbolt locks outside knob/lever and displays "Occupied" plate. Rotating inside knob/lever simultaneously retracts both deadbolt and latchbolt, and unlocks outside knob/lever. Inside lever is always free for immediate egress. (Previously XL11-885)

*In a double-door application where the dummy will be used as the strike order 10-091 Armored Front Strike separately.

Caution: Double cylinder locks on residences and any door in any structure which is used for egress are a life safety hazard in times of emergency and their use is not recommended. Installation should be in accordance with existing codes only.

PDF created by Specworks® Page 51 of 58

Specworks® Cut Ref # SCH_0011 pg 21 of 22
DocuSign Envelope ID: 330DEBD6-9A9E-4F34-BDCC-1AC1BAA701E9

Specifications

Handing:
L9000-Series lock bodies are field-reversible without disassembly. L400-Series locks are non-handed.

Door Thickness:
1 3/4" (44 mm) standard. 1 3/8" (35 mm) to 2 1/2" (64 mm) optional. Over 2 1/2" (64 mm) door ranges vary by function. No escutcheon available for 1 3/4" (44 mm) doors standard. 2" to 2 3/8" (51 mm to 60 mm) optional. Specify door thickness if other than 1 3/4".

Backset:
2-3/4" (70 mm) only.

Armored Front:
L9000-Series: 1 1/4" x 8" x 7/32" (32 mm x 203 mm x 6 mm) standard.
1 1/16" x 8" x 1 7/32" (27 mm x 203 mm x 6 mm) optional.
L400-Series: 4 7/16" x 3 5/8" x 1" (113 mm x 92 mm x 25 mm)

Case Size:
L9000-Series: 4 7/16" x 6 1/16" x 1" (113 mm x 154 mm x 25 mm)
L400-Series: 4 7/16" x 3 5/8" x 1" (113 mm x 92 mm x 25 mm)

Spacing:
Knob or lever to cylinder, 3 7/8" (98mm); knob or lever to thumbturn hub, 2 11/16" (68mm).

Bolts:
1" (25mm) throw stainless steel deadbolt and 3/4" (19mm) throw stainless steel latch with anti-friction tongue.

Exposed Trim:
Knobs: #41 and #42 heavy-duty wrought brass, bronze or stainless steel knobs match D-Series knobs.
Levers: Forged brass or bronze and cast stainless steel. Designs available to match D-Series levers.
93 Lever Design: Extruded brass, bronze or stainless steel.

Mediterranean Designs: Forged-brass lever and rose.

Escutcheons: L escutcheons are cold-forged brass or bronze and stainless steel. N escutcheons are heavy wrought reinforced brass, bronze and stainless steel.

Trim Combinations: Available with knob both sides, lever both sides, or knob and lever with rose or escutcheon both sides.

Strike:
L9000-Series: ANSI curved lip strike 1 1/4" x 4 7/8" (32 mm x 124 mm) x 1 3/16" (30 mm) lip to center with dust box standard. L400-Series: 1 1/8" x 3 5/8" (29 mm x 92 mm) with dust box.

Cylinder & Keys:
6-pin Everest C123 keyway cylinder with two patented keys standard.

Keying Options:
Interchangeable core and Primus high security cylinders. Master keying, grand master keying and construction keying.

Certifications

ANSI:
L9000: ANSI A156.13 Series 1000, Grade 1 Operational and Security, UL Listed for 3-hour fire door (except L9076 and L9007). With interchangeable core cylinders: Grade 2 Security.

With Concealed Shell Cylinder: A156.13 Grade 1 Operational and Security. ANSI/ASTM F476-76 Grade 40, UL Listed. L400: ANSI A156.5 Grade 1

California State Reference Code:
(Formerly Title 19, California State Fire Marshal Standard) All levers with returns comply; levers return to within ½" of door face.

UL / cUL:
All locks listed for A label single doors, 4' by 10'. Letter F and UL symbol on latch front indicate listing. Electrified functions are UL19X Listed for single-point locking applications. UL437 Listed locking cylinder optional: specify Primus 20-500 Series cylinder.

Door Preparation for L9000 Series

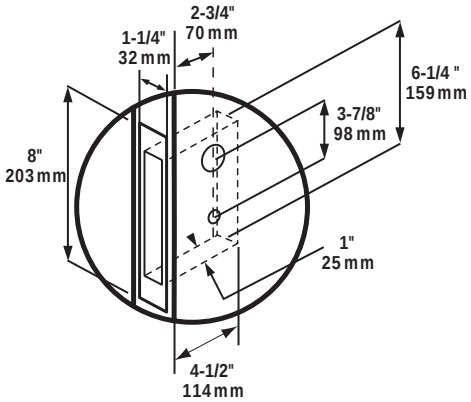

Door Preparation for L400 Series

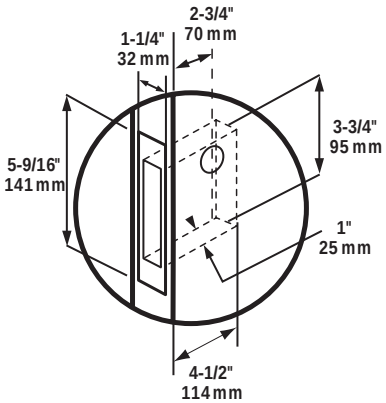

PDF created by Specworks® Page 56 of 58

Specworks® Cut Ref # SCH_0011 pg 22 of 22
DocuSign Envelope ID: 330DEBD6-9A9E-4F34-BDCC-1AC1BAA701E9

How to Order

To order Schlage products, descriptive data should be in the same sequence as shown.

Line Item	Qty	Product	Outside		Inside		Hand	Front	Strike	Door Thickness	Ext	Dim	Additional Details
			Des	Fin	Des	Fin							
1	2	3	4	5	6	7	8	9	10	11	12	13	14

1 Line item number
2 Quality
3 Complete model number with function and cylinder type
To order cylinder options, change "P" at the end of the model number as follows:

L9453**P** Standard
L9453**L** Less standard cylinder. For Primus cylinder, specify this option and order Primus cylinder separately.
L945**C** With temporary plastic construction cylinder. Double cylinder functions ordered less cylinder are furnished with these construction cylinders to maintain timing of key cams.

L9453**J** Prepared for full size interchangeable core, less core. For Primus core, specify this option and order Primus core separately.
L9453**R** With full-size conventional interchangeable core installed. Order control keys separately.
L9453**T** With full-size (temporary) construction core installed. Order all keys separately.

L9453**BD** Prepared for small format (Falcon, Best, etc.) interchangeable core (SFIC), less core.
L9453**GD** With Everest B Family restricted keyway small format core installed. Order control keys separately.
L9453**HD** With small format keyed brass construction core installed. Order all keys separately.

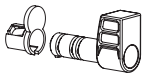

L9453**BDC** With small format disposable plastic construction core installed.

4/5 Outside design / finish. Specify tactile warning (knurling) here as "8" before lever design, e.g. 803. To specify complete design, combine the numeric knob or lever design with the alpha rose or escutcheon design. Example: 03L, 93A, 42B. When ordering Mediterranean design levers with L escutcheons, specify AST/00L, AVA/00L or MER/00L.
6/7 Inside design/finish. Leave blank if same as outside.
8 Hand. One hand per line item.
9 Front (use "Strike" field on Schlage form). Leave blank for standard armored front or enter number for narrow front.
10 Strike. Leave blank for standard or specify part number for optional strike. LLL = Less Strike.
11 Door thickness, if non-standard. Example: 200 = 2".
12 Extension, to specify whether thick door is extended inside (EI), outside (EO), differently (ED) or equally (EE).
13 Dimension for strike lip lengths. See strike page for availability of specific dimensions with specific strikes.

100 = 1"	114 = 1 1/4"	112 = 1 1/2"	200 = 2"
118 = 1 1/8"	138 = 1 3/8"	134 = 1 3/4"	

14 Keying detail (e.g. key symbol, keyway, bitting) and other special requirements.

Example

Line Item	Qty	Product	Outside		Inside		Hand	Front	Strike	Door Thickness	Ext	Dim	Additional Details
			Des	Fin	Des	Fin							
1	50	L9453P	03A	626			RH		10-091				
2	50	L9453P	03A	626			LH		10-091				
3	10	L9040	03A	626			RH			138			
4	10	L9040	03A	626		625	LH	09-668		138			
5	50	L9456P	07L	626		625	RH	09-668					
6	50	L9456P	07L	626			LH						

Note: Schlage order forms are available at no charge by contacting your IR Security & Safety Consultant or Customer Service.

PDF created by Specworks® Page 57 of 58

Specworks® Cut Ref # SCH_0029 pg 1 of 1
DocuSign Envelope ID: 330DEBD6-9A9E-4F34-BDCC-1AC1BAA701E9

Full Size Interchangeable Core Cylinders for Schlage Locksets

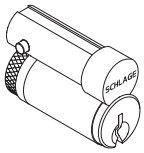

Full Size Core Only

Number	Mechanism
23-030	Conventional core
30-120	Conventional core for hotel function (specify hand)
20-740	Primus core (not available in hotel function)

Available 606 and 626 finish only. Everest C123 keyway standard.
Order control keys separately.

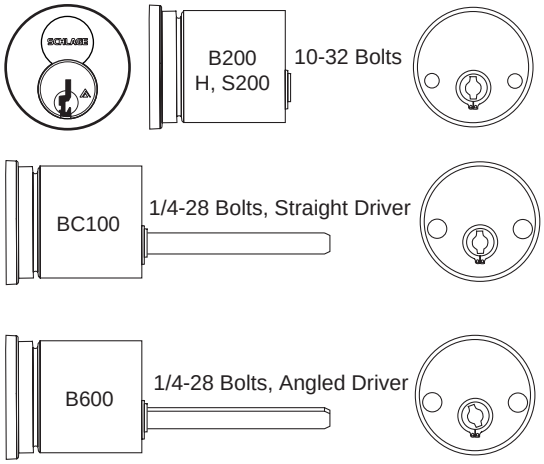

Full Size IC Housings for Bored Deadlocks, Less Core

Lockset Series	Description	Number	Specify Finish
BC100-Series	Outside	B220-203	605, 609, 612, 613, 625, 626
	Inside	B220-204	See Note Below
B250, H, S200-Series	Outside	22-061	605, 606, 609, 610, 611, 612, 613, 616, 625, 626
	Inside of B252	22-062	
B600 / 700-Series	Outside	B610-027	605, 606, 609, 612, 613, 625, 626
	Inside	B610-028	See Note Below

Specify finish of B610-031 inside snap-on faceplate ordered separately for BC162 and B662/762.

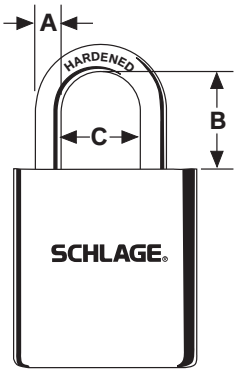

Interchangeable Core Padlocks

Padlock Series	Shackle Dimensions			Padlock with Core	
	A	B	C	Conventional	Primus
PL4000 2" x 2¼" x ⅞"	⅜"	1⅛"	¾"	PL4001	PL4741
	⅜"	2"	¾"	PL4002	PL4742
	⅜"	3"	¾"	PL4003	PL4743

PDF created by Specworks® Page 58 of 58

DocuSign Envelope ID: 330DEBD6-9A9E-4F34-BDCC-1AC1BAA701E9

299 Strike

98 and 99 rim exit devices for all types of single and double doors with mullion, UL listed for Panic Exit Hardware. Devices are ANSI A156.3 – 2001 Grade 1. The 98 device has a smooth mechanism case and the 99 device has a grooved case. The rim device is non-handed except when the following device options are used: SD (Special Dogging), -2 (Double Cylinder) or SS (Signal Switch). See Opposite page for available outside trim and device functions. Covers stock hollow metal doors with 86 or 161 cutouts on single doors (may cover cutouts on pairs – consult template).

The 98/99 devices are available in the following finishes: US3, US4, US10, US26, US26D, US28, 313AN, 315AN and US32D for the 98 device only. See page 52 for component finishes and the inside cover for finish chips.

Specifications

Device Functions	Device ships EO/DT/NL. Field selectable. For TP,K,or L remove NL drive screw from device		
Device Lengths	3'	2'4" to 3' (711mm to 914 mm) Door Size	
	4'	2'10" to 4' (864 mm to 1219 mm) Door Size	
Strikes	299 – Dull Black Optional Strikes – see page 39		
Dogging Feature	Hex key dogging standard		
Dogging Options	CD	Cylinder Dogging	see page 48
	SD	Special Center Case Dogging	see page 48
	LD	Less Dogging	see page 48
Electric Options	LX	Latchbolt Monitor Switch	see page 42
	RX	Pushpad Monitor Switch	see page 42
	RX2	Double Pushpad Monitor Switch	see page 42
	E	Electric Locking & Unlocking	see page 44
	EL	Electric Latch Retraction	see page 43
	SS	Signal Switch	see page 43
	CX	Chexit Delayed Exit	see page 45
	ALK	Alarm Exit Kit	see page 42
Miscellaneous Options	PN	Pneumatic Latch Retraction	see page 48
	-2	Double Cylinder	see page 48
	GBK	Glass Bead Kit	see page 49
Fasteners & Sex Bolts (SNB)	Includes 1 ¾" (19mm) – 2 ¼" (57mm) Wood & Metal Doors Optional SNB available for device, see next page for quantities		
Latch Bolt	Deadlocking, ¾" (19mm) throw		
Device Centerline from Finished Floor	39 13⁄16" (1011 mm) 39 11⁄16" (1008 mm) with Mullion		
Center Case Dimensions	8" x 2 ¾" x 2 ⅜" (203mm x 70mm x 60mm)		
Mechanism Case Dimensions	2 ¼" x 2 ¼" (57mm x 57mm)		
Projection	Pushbar Neutral – 3 13⁄16" (97 mm) Pushbar Depressed – 3 1⁄16" (78 mm)		

See page 53 for How to Order specification

© 2004 Ingersoll-Rand. May be copied for use with specification submittal.

DocuSign Envelope ID: 330DEBD6-9A9E-4F34-BDCC-1AC1BAA701E9

VON DUPRIN® 98/99™ Rim Exit Device Standard Trim

	Exit only	**Dummy Trim** Pull when Dogged 	**Night Latch** Key Retracts Latchbolt 	**Night Latch** Key Retracts Latchbolt Optional Pull Required
Product Description	98EO 99EO	98DT 99DT	98NL 99NL	98NL-OP 99NL-OP
Trim Description	—	990DT	990NL-R/V	110NL-MD 110NL-WD
Escutcheon Plate Size	—	3" x 14 3/16" x 3/32" *(76x360x2mm)*	3" x 14 3/16" x 3/32" *(76x360x2mm)*	—
Pull Center to Center	—	5½" *(140mm)*	5½" *(140mm)*	—
Projection	—	2" *(51mm)*	2" *(51mm)*	—
ANSI Function	01	02	03	03
Cylinder Type	—	—	Rim	Rim
Optional Trim (See pages 32 – 34)	x990EO x992EO x994EO x996EO	x991K-DT x992L-DT x994L-DT x996L-DT x696DT x697DT	x991K-NL x992L-NL x994L-NL x996L-NL x696NL x697NL	
Optional #425 Sex Bolt Quantity for Device	6	2	2	6

	Lever Key Locks & Unlocks 	**Lever – Night Latch** Key Retracts Latchbolt 	**Lever – Blank Escutcheon** Always operable (No Cylinder) 	**Lever Dummy Trim** Pull when Dogged
Product Description	98L 99L	98L-NL 99L-NL	98L-BE 99L-BE	98L-DT 99L-DT
Trim Description	996L-R/V	996L-NL-R/V	996L-BE-R/V	996L-DT-R/V
Escutcheon Plate Size	2¾" x 10¾" x 27/32" *(70x273x21mm)*	2¾" x 10¾" x 27/32" *(70x273x21mm)*	2¾" x 10¾" x 27/32" *(70x273x21mm)*	2¾" x 10¾" x 27/32" *(70x273x21mm)*
Pull Center to Center	—	—	—	—
Projection	2⅞" *(73mm)*	2⅞" *(73mm)*	2⅞" *(73mm)*	2⅞" *(73mm)*
ANSI Function	08	09	—	02
Cylinder Type	Rim	Rim	—	—
Optional Trim (See pages 32 – 34)	x992L x994L	x992L-NL x994L-NL	x992L-BE x994L-BE	x992L-DT x994L-DT
Optional #425 Sex Bolt Quantity for Device	2	2	2	2

For optional trims and functions see pages 32-34

DocuSign Envelope ID: 330DEBD6-9A9E-4F34-BDCC-1AC1BAA701E9

299 Top Strike

248L4
Bottom Strike
for use with
flat threshold

304L
Bottom Strike

Top Latch

Bottom Latch

9827/9927 surface mounted vertical rod device for all types of single or double doors, UL listed for Panic Exit Hardware. Devices are ANSI A156.3 – 2001 Grade 1. Covers stock hollow metal doors with 86 or 161 cutouts. The 9827 device has a smooth mechanism case and the 9927 device has a grooved case. The surface vertical rod device is non-handed except when the following device options are used: SD (Special Dogging), or SS (Signal Switch). See Opposite page for available outside trim and functions.

The 9827/9927 devices are available in the following finishes: US3, US4, US10, US26, US26D, US28, 313AN, 315AN and US32D for the 9827 device only. See page 52 for component finishes and the inside cover for finish chips.

Vertical rod and latch guards are available to protect the bottom rod of the exit device from damage by impacts of carts or gurneys passing through doors. ***Refer to page 49***

Specifications

Device Functions	Device ships EO/DT/NL. Field selectable. For TP,K,or L remove NL drive screw from device		
Device Lengths	3'	2'4" to 3' (711mm to 914 mm) Door Size	
	4'	2'10" to 4' (864 mm to 1219 mm) Door Size	
Strikes	Top - 299 – Dull Black, Bottom – 248L4 & 304L - Unfinished Optional Strikes – see page 39		
Dogging Feature	Hex key dogging standard		
Dogging Options	CD	Cylinder Dogging	see page 48
	SD	Special Center Case Dogging	see page 48
	LD	Less Dogging	see page 48
Electric Options	LX	Latchbolt Monitor Switch	see page 42
	RX	Pushpad Monitor Switch	see page 42
	RX2	Double Pushpad Monitor Switch	see page 42
	EL	Electric Latch Retraction	see page 43
	SS	Signal Switch	see page 43
	CX	Chexit Delayed Exit	see page 45
	ALK	Alarm Exit Kit	see page 42
Miscellaneous Options	PN	Pneumatic Latch Retraction	see page 48
	LBR	Less Bottom Rod	see page 49
	GBK	Glass Bead Kit	see page 49
	PL	Pullman Latch	see page 49
Fasteners & Sex Bolts (SNB)	Includes 1 ¾" (19mm) – 2 ¼" (57mm) Wood & Metal Doors SNB furnished for top & bottom latches Optional SNB available for device, see next page for quantities		
Latch Bolt	Deadlocking Anti-friction Top & Bottom Bolt, ⅝ " (16mm) throw		
Device Centerline from Finished Floor	39 ⅝" (1006 mm)		
Door Undercut	¼" (7mm)		
Center Case Dimensions	8" x 2 ¾" x 2 ⅜" (203mm x 70mm x 60mm)		
Mechanism Case Dimensions	2 ¼" x 2 ¼" (57mm x 57mm)		
Top & Bottom Latch Case	4 ½" x 2 ⅛" x 1 ½" (114mm x 54mm x 38mm)		
Vertical Rods	½" square tubing, standard rods accommodate 7' (2134mm) door Top rod length is 34 15⁄16" (887mm) Bottom rod length is 31 ¼" (794mm) Extension rods available, 1' (205mm) or 3' (914mm) for doors over 7' One piece top rod available for 8' (2438mm) – 10' (3048mm) door		
Projection	Pushbar Neutral – 3 13⁄16" (97 mm) Pushbar Depressed – 3 1⁄16" (78 mm)		

See page 53 for How to Order specification

© 2004 Ingersoll-Rand. May be copied for use with specification submittal.

DocuSign Envelope ID: 330DEBD6-9A9E-4F34-BDCC-1AC1BAA701E9

9827/9927 Surface Mounted Vertical Rod Device Standard Trim

	Exit only	**Dummy Trim** Pull when Dogged	**Night Latch** Key Retracts Latchbolt	**Night Latch** Key Retracts Latchbolt Optional Pull Required	**Thumbturn** Key Locks & Unlocks (Use with DT Trim)	**Thumbturn** Blank Escutcheon Always Operable (No Cylinder) (Use with DT Trim)
Product Description	9827EO 9927EO	9827DT 9927DT	9827NL 9927NL	9827NL-OP 9927NL-OP	9827TL 9927TL	9827TL-BE 9927TL-BE
Trim Description	—	990DT	990NL-R/V	110NL-MD 110NL-WD	374T x 990DT	374T-BE x 990DT
Escutcheon Plate Size	—	3" x 14 3/16" x 3/32" *(76x360x2mm)*	3" x 14 3/16" x 3/32" *(76x360x2mm)*	—	2 9/16" x 5½" x 2⅝" *(65x140x67mm)*	2¾" x 10¾" x 27/32" *(70x273x21mm)*
Pull Center to Center	—	5½" *(140mm)*	5½" *(140mm)*	—	—	—
Projection	—	2" *(51mm)*	2" *(51mm)*	—	3¼" *(83mm)*	3¼" *(83mm)*
ANSI Function	01	02	03	03	11	—
Cylinder Type	—	—	Rim	Rim	1¼" Mortise	—
Optional Trim (See pages 32 – 34)	x990EO x992EO x994EO x996EO	x991K-DT x992L-DT x994L-DT x996L-DT x696DT x697DT	x991K-NL x992L-NL x994L-NL x996L-NL x696NL x697NL			
Optional #425 Sex Bolt Quantity for Device	6	2	2	6	2	2

	Lever Key Locks & Unlocks	**Lever – Night Latch** Key Retracts Latchbolt	**Lever – Blank Escutcheon** Always operable (No Cylinder)	**Lever Dummy Trim** Pull when Dogged
Product Description	9827L 9927L	9827L-NL 9927L-NL	9827L-BE 9927L-BE	9827L-DT 9927L-DT
Trim Description	996L-R/V	996L-NL-R/V	996L-BE-R/V	996L-DT-RV
Escutcheon Plate Size	2¾" x 10¾" x 27/32" *(70x273x21mm)*	2¾" x 10¾" x 27/32" *(70x273x21mm)*	2¾" x 10¾" x 27/32" *(70x273x21mm)*	2¾" x 10¾" x 27/32" *(70x273x21mm)*
Pull Center to Center	—	—	—	—
Projection	2⅞" *(73mm)*	2⅞" *(73mm)*	2⅞" *(73mm)*	2⅞" *(73mm)*
ANSI Function	08	09	—	02
Cylinder Type	Rim	Rim	—	—
Optional Trim (See pages 32 – 34)	x992L x994L	x992L-NL x994L-NL	x992L-BE x994L-BE	x992L-DT x994L-DT
Optional #425 Sex Bolt Quantity for Device	2	2	2	2

For optional trims and functions see pages 32-34

DocuSign Envelope ID: 330DEBD6-9A9E-4F34-BDCC-1AC1BAA701E9

Vertical Rod and Latch Guard — RG-27

Rod Guard

Series RG-27 Vertical Rod and Latch Guards protect the bottom rods of exit devices from the damaging impacts of carts or gurneys passing through doors. (If bottom rods become damaged, the exit device will not function as intended and can jeopardize the ability to exit safely during an emergency.)

In addition to protecting the vertical rod, the guard provides a smooth, unobstructed surface so the door can be pushed open easily with the bumpers of a wheelchair. The latch guard portion is 10" high. The standard latch guard features a 45° ramp. The extended latch guard offers a continuous ramp in 3' or 4' widths.

All stainless steel construction in US32D finish. Latch guards can cover latches as large as 1¼"W x 10"H x 1⅞" projection.

Latch Guard

Models
RGO — Rod guard only (Projection 1 3⁄16").
RG-27 — Rod and latch guard.
RG-27-3 — 3' *(914mm)* Rod Guard and Extended Latch Guard.
RG-27-4 — 4' *(1219mm)* Rod Guard and Extended Latch Guard.

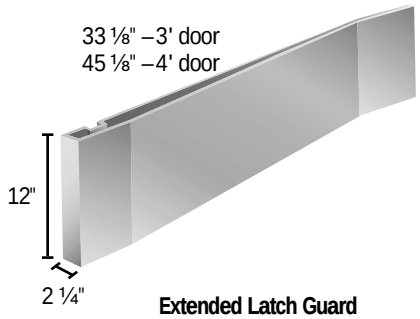

Extended Latch Guard

LGO — Latch guard only.
LGO-3 — 3' *(914mm)* Extended latch guard only.
LGO-4 — 4' *(1219mm)* Extended latch guard only.

Note: Not for use on wood fire doors

To Order, Specify:

1. Model number.
2. Handing (except on RGO).
3. Door material if other than Hollow Metal.
4. Optional sex bolt mounting available.

Less Bottom Rod – LBR

LBR option is available, using a spring loaded auxiliary latch bolt installed in the lower door edge. When exposed to heat the auxiliary latch bolt releases, keeping the doors in alignment and closed during a fire. UL listed 3 hours on hollow metal doors double egress, 90 minute swinging same direction, and 20 minutes wood doors (consult wood door manufacturer). Fits door stiles as narrow as 3⅝".

LBR devices must be ordered in pairs or must be used in conjunction with an approved automatic or constant latching flush bolt.

Pullman Latch – PL

When PL is specified the standard latches are replaced with pullman style latches. Pullman latches are always extended and are most commonly used in conjunction with electric strikes and LBR-less bottom rod application. Not available with Fire rated devices. Not recommended where security is of the utmost since latches do not deadlock.

Glass Bead Kit – GBK

Glass bead conversion kits are available for all 98/99™ Series devices for use on doors with raised glass beads. Each kit consists of ¼" *(6mm)* shim sets. GBK for Surface Vertical Rod ships with ⅛" shims for rod guides.

To order, specify:

1. 99GBK
2. Device type (Rim, Mortise, Surface Vertical Rod, Concealed Vertical Rod)
3. Wood Door, when used with Concealed Vertical Rod

997 Cover Plate Kit

For 99 rim device, kit contains inside and outside plates for hinge stile cutouts, an inside plate for the lock stile, and necessary screws. Plates are designed to cover cutouts required by most existing exit device installations. Specify finish.

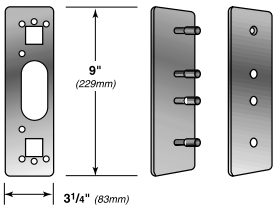

DocuSign Envelope ID: 330DEBD6-9A9E-4F34-BDCC-1AC1BAA701E9

Toll Free Phone 1-800-647-7874
Toll Free Fax 1-800-255-7874

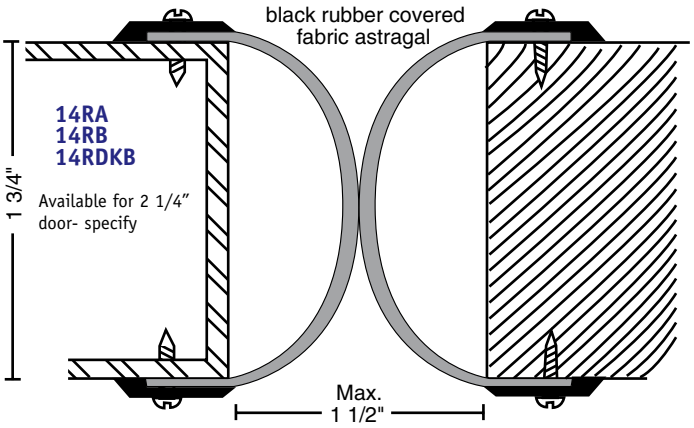

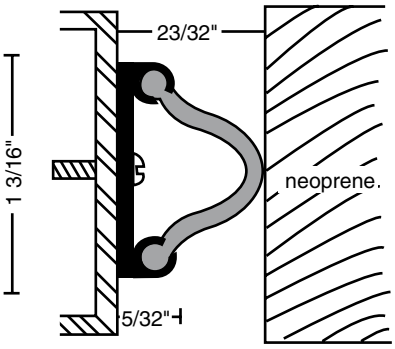

112N
112NDKB

Drip Strips

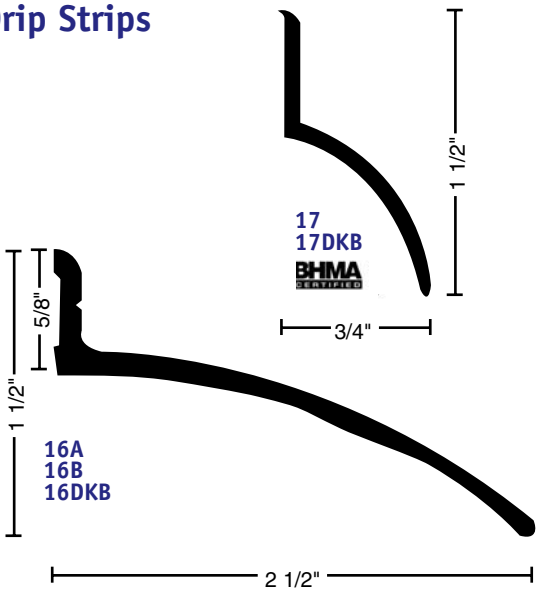

Security Astragal

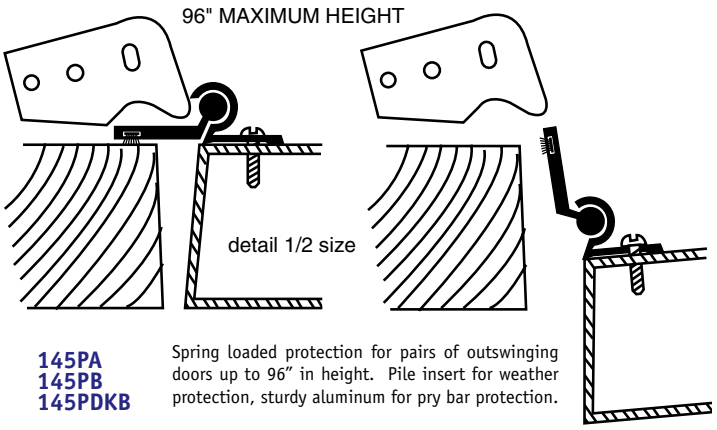

145PA
145PB
145PDKB

Spring loaded protection for pairs of outswinging doors up to 96" in height. Pile insert for weather protection, sturdy aluminum for pry bar protection.

Overhead Door Bottom Seal

81369N
81369NDKB

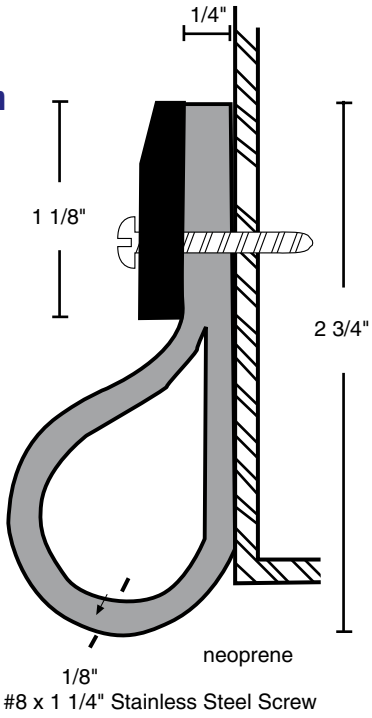

Glass Door Astragal Seals

Our glass door seal consists of translucent PVC channel and nylon brush for an attractive solution to a difficult problem.

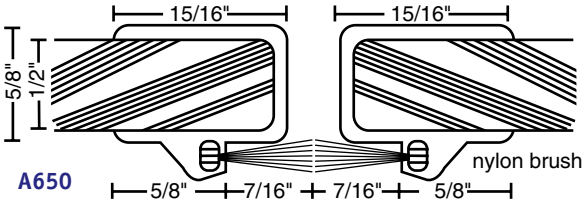

A650

Order as **set** to receive two pieces

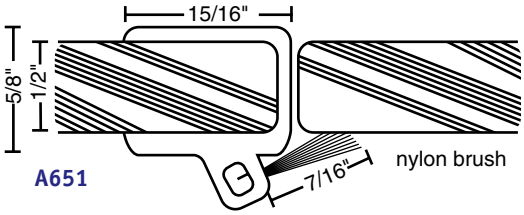

A651

Maximum length120"

E-mail: ngpinfo@ngpinc.com
www.ngpinc.com

DocuSign Envelope ID: 330DEBD6-9A9E-4F34-BDCC-1AC1BAA701E9

Automatic Door Bottoms - Full-Mortise Models

434_NBL

AVAILABLE FINISH: A

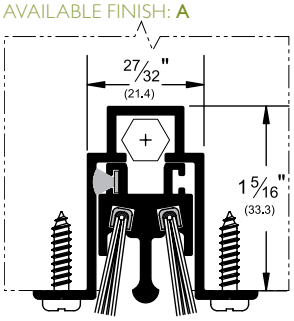

nylon brush (**NB**)

434_RL

AVAILABLE FINISH: A

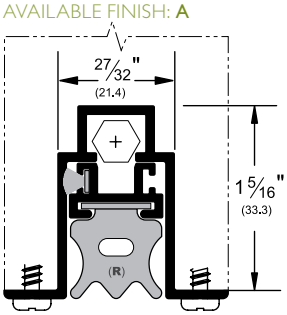

EPDM (**R**)

Alternate Inserts For 434

434_PKL

AVAILABLE FINISH: A

PemkoPrene™ (**PK**)

411_NBL

AVAILABLE FINISH: A

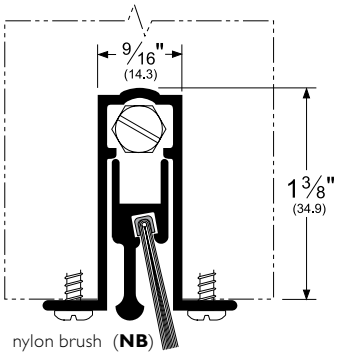

nylon brush (**NB**)

411_RL

AVAILABLE FINISH: A

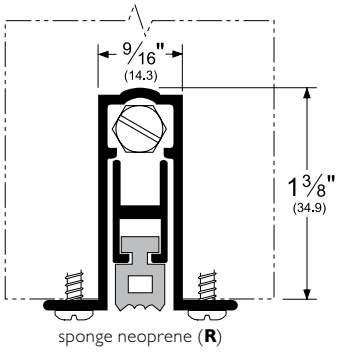

sponge neoprene (**R**)

Alternate Inserts For 411

411_PKL

AVAILABLE FINISH: A

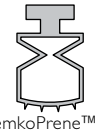

PemkoPrene™ (**PK**)

411_SL

AVAILABLE FINISHES: A

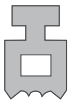

sponge silicone (**S**)

420_PKL

AVAILABLE FINISH: A

For hollow metal doors.
Maximum drop is ½"

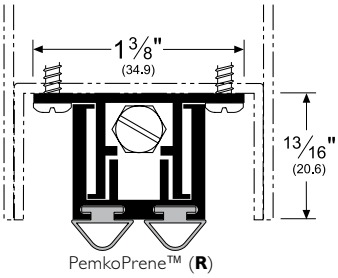

PemkoPrene™ (**R**)

Alternate Inserts For 420

420_VL

AVAILABLE FINISH: A

vinyl (**V**)

Vinyl products
are not BHMA certified

420_SL

AVAILABLE FINISH: A

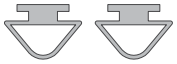

silicone (**S**)

NOTE: Products shown in this section may not be drawn to scale.

AVAILABLE FINISHES FOR PRODUCTS SHOWN ON THIS PAGE (see General Information section for finish chart)
A (Mill Finish Aluminum)

Copyright © 2012, Pemko Manufacturing Co., an ASSA ABLOY Group company. All rights reserved.
Reproduction in whole or in part without the express written permission of Pemko Manufacturing Co. is prohibited.

DocuSign Envelope ID: 330DEBD6-9A9E-4F34-BDCC-1AC1BAA701E9

PEMKO ASSA ABLOY
800-824-3018
www.pemko.com

Meeting Stile Gasketing

- Astragals / Meeting Stiles with a fire label may be mounted on pairs of doors wherein the gap meets the requirements of NFPA 80, 2-5.4
- These products (except _71) do not work well on beveled-edge pairs of doors

369_V

AVAILABLE FINISHES:
A, D, G

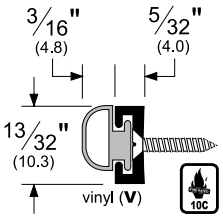

369_PK

AVAILABLE FINISHES:
A, D, G

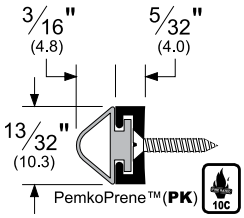

369_S

AVAILABLE FINISHES:
A, D, G

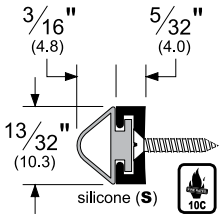

369_P

AVAILABLE FINISHES:
A, D, G

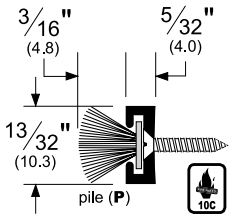

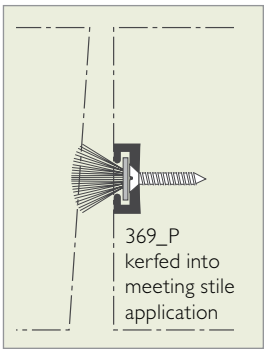

A371P
A372P

- Available in 84" and 96" lengths
- Available in gray pile only
- Fasten with nails or staples through pile and backing, or use adhesive. Fasteners not supplied
- Pile and backing do not separate

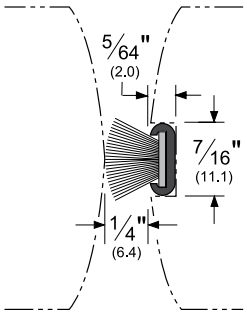

300_P

AVAILABLE FINISHES:
B, C, D, G

- For a 3/8" gap (or smaller) between doors
- Spring-loaded from back side

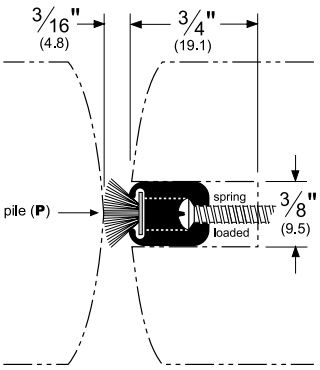

B71
SS71

- .008 gauge hemmed spring bronze with .015 gauge brass retainer
- .008 gauge hemmed stainless steel with .020 gauge stainless steel retainer
- Available in 96" length only

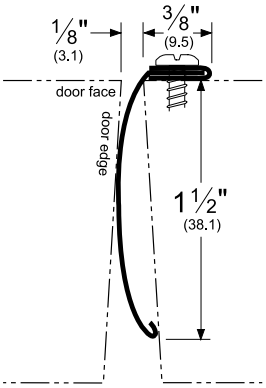

313_N

AVAILABLE FINISHES:
A, D, G

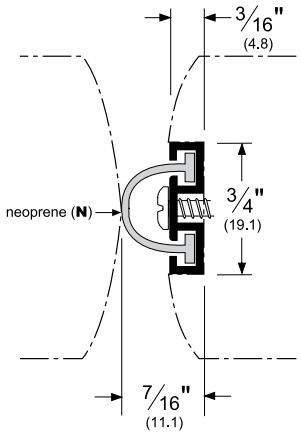

314_N

AVAILABLE FINISHES:
C, D, G

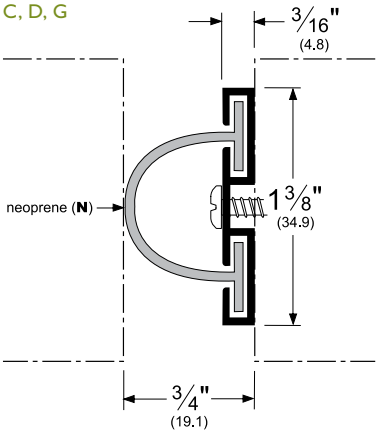

358_N

AVAILABLE FINISHES:
C, D, G

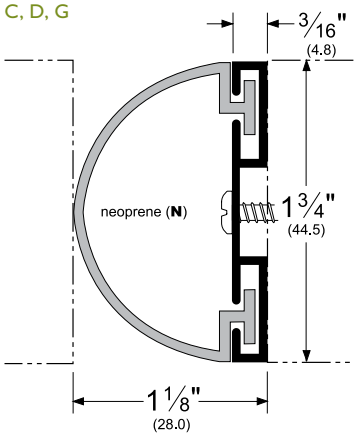

AVAILABLE FINISHES FOR PRODUCTS SHOWN ON THIS PAGE (see General Information section for finish chart)
A (Mill Finish Aluminum) B (Mill Finish Extruded Bronze [Brass]) B (Hemmed Spring Bronze) C (Clear Anodized) D (Dark Bronze Anodized)
G (Gold Anodized) SS (Stainless Steel) Special finishes available upon request

ASSA ABLOY, the global leader in door opening solutions

Copyright © 2012, Pemko Manufacturing Co., an ASSA ABLOY Group company. All rights reserved.
Reproduction in whole or in part without the express written permission of Pemko Manufacturing Co. is prohibited.

DocuSign Envelope ID: 330DEBD6-9A9E-4F34-BDCC-1AC1BAA701E9

SECTION 99-087500

WINDOW HARDWARE

PART 1 - GENERAL

1.1 SUMMARY

A. Section Includes: Miscellaneous hardware to operate existing clerestory windows.

1.2 DESIGN REQUIREMENTS

A. Operation:
1. Operate existing clerestory windows from floor by use of ropes, and tie-offs.
2. Pulling cord opens window.
3. Cord ring on end of cord attaches to hook to hold window open.
4. Releasing cord closes window.

B. Materials Include:
1. 1/4 inch nylon sash cord.
2. Cord ring.
3. Tie-off hooks.

1.3 SUBMITTALS

A. Product Data: Include data for each product.

B. Shop Drawings: Indicate materials, dimensions, cord runs, connection, details, operating procedures, and attachment provisions.

C. Samples: Submit 12 inches of sash cord and one of each type hardware item.

1.4 DELIVERY, STORAGE, AND HANDLING

A. Deliver, store, and handle products in accordance manufacturer's instructions.

B. Provide protective coverings of suitable material. Take special precautions at corners.

1.5 WARRANTY

A. Furnish warranty against defects in material for 10 years. Include material and labor to repair or replace defective materials.

PART 2 - PRODUCTS

2.1 MATERIALS

A. Sash Cord:
1. #8 SPOT 1/4" X 100' COTTON SASH CORD
2. High tenacity nylon core adds extra strength and reduces stretch
3. Coating provides chemical, weather and heat resistance.
4. Color: White.
5. Core: Nylon.
6. Diameter: 1/4 inch.

B. Cord Ring: Round Ring
1. Stainless steel (316 Stainless Steel) Round Ring.
2. Termination for rope.
3. 1/8 inch by 1 inch diameter.

C. Hook:
1. Stainless steel wall hook.
2. Cord ring connects to hook to hold window open.
3. Hook points down when attached to substrate.

DocuSign Envelope ID: 330DEBD6-9A9E-4F34-BDCC-1AC1BAA701E9

2.2 ACCESSORIES

A. Fasteners:
   1. Type recommended by manufacturer for item being attached.
   2. Stainless steel material.
   3. Countertop: 3/4-inch.

PART 3 - EXECUTION

3.1 EXAMINATION

A. Examine conditions and proceed with work when substrates are ready.

3.2 INSTALLATION

A. Install in accordance with manufacturer's instructions and approved Shop Drawings.

B. Install units for easy, non-fouling operation of rope system.

END OF SECTION

DocuSign Envelope ID: 330DEBD6-9A9E-4F34-BDCC-1AC1BAA701E9

SECTION 99-088000

GLAZING

PART 1 - GENERAL

1.1 SUMMARY

A. Section Includes:
   1. Replacement glass in existing windows.
   2. Glass for hollow metal doors.
   3. Glass for aluminum curtain walls.
   4. Re-putty of existing glass within steel frames.
   5. Water test of existing windows to verify watertightness.
   6. Glazing film for seismic performance.
   7. Associated glazing sealants and accessories.

B. Related Sections:
   1. Section 99-084126 – All-Glass Entrance Doors.
   2. Section 99-084413 - Glazed Aluminum Curtain Walls.

1.2 SYSTEM REQUIREMENTS

A. General: In addition to requirements shown or specified, comply with design requirements of Section 99-084413.

B. Design Requirements:
   1. Provide continuity of building enclosure to maintain continuous air and vapor barrier throughout glazed assembly from glass pane to heel bead of sealant.
   2. Employ registered professional engineer, licensed to practice structural engineering, to engineer each component of glass and glazing system.
   3. Site survey existing windows to determine quantity of broken and cracked glass pieces. All broken and cracked glass shall be replaced as part of the base bid.
   4. Re-putty all existing glass in steel frames prior to water test as part of base bid.
   5. Provide water test on all existing glazed elements.
   6. Existing glazing putty may contain asbestos fibers and painted window frames may contain lead paint. Refer to Section 99-024119 – Selective Demolition for procedures for handling hazardous materials.
   7. Water test and replacement of broken glass is part of base bid.
   8. Provide unit prices for removal, cleaning, and reglazing of all broken glass lites as part of the Schedule of Values submittal.

C. Performance Requirements: Provide thickness of glass units to withstand specified wind loads.

D. Glazing Requirements:
   1. Comply with CPSC 16 CFR 1201 and ANSI Z97.1 for safety requirements of glazing materials.
   2. Glass thickness, where indicated, are minimum requirements and are to be confirmed by glass manufacturer.
   3. Provide glass of thickness and heat treatment (annealed, heat strengthened or fully tempered) as necessary to prevent temperature stress breakage.
   4. Use 2.5 safety factor of glass to statistical probability of failure (8 lites/1000).
   5. Provide glass complying with ASTM E1300.
   6. Obtain safety glazing products permanently marked with certification label of the Safety Glazing Certification Council or another certification agency acceptable to authorities having jurisdiction.

1.3 SUBMITTALS

A. Product Data: Manufacturer's product data for each type of glass and glazing material specified, including glazing accessories and glazing sealants.

DocuSign Envelope ID: 330DEBD6-9A9E-4F34-BDCC-1AC1BAA701E9

B. Shop Drawings:
   1. Sections and details of glass and glazing materials installation at framing members including head, mullions, transoms, jambs and sills.
   2. Stamp shop drawings with seal and signature of professional engineer responsible for design for glass in curtain walls.

C. Samples:
   1. 12 inches by 12 inches in size illustrating color of insulating glass units.
   2. Glazing film mounted on 12 inch square clear glass. Leave 1 inch border all around.
   3. Two full size signage letters on glazing film **W2** mounted to glass per architectural drawing for owners' review and approval.

D. Submit following Informational Submittals:
   1. Test Reports:
      a. Glazing sealant indicating substrate adhesion.
      b. Glazing sealant compatibility.
      c. Glazing sealant manufacturer's recommendations.
   2. Certifications specified in Quality Assurance article.
   3. Qualification Data: Engineer's and installer's qualification data.
   4. Manufacturer's instructions.

E. Closeout Submittals:
   1. Submit under provisions of Section 99-017800.
   2. Warranty: Submit specified warranty.

1.4 QUALITY ASSURANCE

A. Single Source Responsibility: Glass of each type to be produced by same manufacturer.

B. Engineer Qualifications: Registered professional engineer licensed to practice structural engineering, with minimum of 5 years experience in design of glass and glazing.

C. Installer Qualifications: Acceptable to manufacturer with documented experience on at least 5 projects of similar nature in past 5 years.

D. Regulatory Requirements:
   1. Fabricate glass to comply with ASTM C1036, ASTM C1048, and ANSI Z97.1.
   2. Perform work in accordance with GANA Glazing Manual and GANA Sealant Manual for glazing installation methods.

E. Certifications:
   1. Manufacturer's letter certifying glass and glazing materials compatibility.
   2. Manufacturer's letter certifying that sealed insulating glass units meet or exceed specification.
   3. Engineering certifications.

1.5 PRE-INSTALLATION CONFERENCE

A. Coordinate with curtain wall.

1.6 DELIVERY, STORAGE, AND HANDLING

A. Deliver, store, and handle products in accordance manufacturer's instructions.

1.7 PROJECT CONDITIONS

A. Environmental Requirements:
   1. Perform glazing when ambient temperature is above 40 degrees F.
   2. Perform glazing on dry surfaces only.

1.8 WARRANTY

A. Manufacturer's standard 10 year warranty on hermetically sealed insulating glass units.

PART 2 - PRODUCTS

DocuSign Envelope ID: 330DEBD6-9A9E-4F34-BDCC-1AC1BAA701E9

2.1 GLASS MATERIALS

A. Clear Annealed Replacement Glass:
   1. Quality: Glazing select, float, complying with ASTM C1036, Type I, Class 1, Quality q3.
   2. Type: Annealed.
   3. Thickness: Match existing for replacement for broken and cracked glass in existing windows.

B. Tempered Clear Glass:
   1. Quality: Glazing select, float, complying with ASTM C1036, Type I, Class 1, Quality q3.
   2. Type: Tempered, complying with ASTM C1048, Kind FT fully tempered.
   3. Thickness: 1/4 inch.

C. Uncoated Insulating Curtain Wall Glass Units:
   1. Quality: Double glazed, hermetically sealed around perimeter with continuous metal spacer filled with moisture absorbing desiccant per ASTM E2190, adhered to glass lights with:
      a. Primary Seal: Polyisobutylene.
      b. Secondary Seal: Silicone two-part.
   2. Total thickness: 1 inch.
      a. Outer Light:
         1) Quality: Glazing select, float, complying with ASTM C1036.
         2) Type: Annealed; Heat-strengthened, complying with ASTM C1048, Kind HS, heat strengthened where required by heat load; tempered, complying with ASTM C1048, Kind FT fully tempered where required by code for safety glazing.
         3) Thickness: 1/4 inch.
         4) Color: Ultra-clear, low iron type.
      b. Inner Light:
         1) Quality: Glazing select, float, complying with ASTM C1036.
         2) Type: Annealed; Heat-strengthened, complying with ASTM C1048, Kind HS, heat strengthened where required by heat load; tempered, complying with ASTM C1048, Kind FT fully tempered where required by code for safety glazing.
         3) Thickness: 1/4 inch.
         4) Color: Ultra-clear, low iron type.
      c. Air Space: 1/2 inch dehydrated air space.
   3. Provide glass capable of being in contact with silicone sealants to ensure tenacious glass to silicone to aluminum bond.
   4. Furnish insulating glass with edge sealant which is compatible with silicone.
   5. Performance Criteria:
      a. Visible Light Transmittance: 84 percent.
      b. Shading Coefficient: 0.94
      c. Winter U-Value : 0.47
      d. Summer U-Value : 0.47
      e. Visible Outdoor Reflectance: 15%
      f. Visible Indoor Reflectance: 15%
   6. Product: Viracon Uncoated Insulating Glass with Starphire.

2.2 GLAZING ACCESSORIES

A. Glazing Tapes for Doors:
   1. Material: Preformed butyl or closed cell PVC foam with integral spacing device and containing paper release.
   2. Hardness: 10-15 Shore A durometer.
   3. Size: Continuous corner to corner.
   4. Acceptable Products:
      a. CRL Norton Brand Glazing Tapes.
      b. Pre-Shimmed 440 Tape, Tremco, Inc., Beachwood, OH.
      c. Norseal V-980, Saint Gobain Performance Plastics, Granville, NY.

B. Glazing Film:

DocuSign Envelope ID: 330DEBD6-9A9E-4F34-BDCC-1AC1BAA701E9

1. Appearance:
   a. **W1** - clear seismic film.
   b. **W2** - signage film – 60% diffuser type (A312).
   c. **W3** - translucent privacy film.
2. Durable, dimensionally stable, translucent film.
3. Uniform color and appearance.
4. Non-yellowing, UV resistant for use with exterior glazing.
5. Acceptable Product: Scotchcal, 3M Commercial Graphics Division, St. Paul, MN.

2.3 GLAZING SEALANTS

A. Silicone Sealant: Refer to Section 99-084413.

B. Adhesives and sealants shall meet or exceed the VOC and chemical component limits of SCAQMD Rule 1168, Cal-GREEN Table 5.504.4.1 Adhesive VOC Limit, and Cal-GREEN Table 5.504.4.2 Sealant VOC Limit requirements.

2.4 GLASS FABRICATION

A. Accurately size glass to fit openings allowing clearances following recommendations of "Glazing Manual" published by Glass Association of North America (GANA).

B. Cut glass clean and carefully. Nicks and damaged edges will not be accepted. Replace glass with damaged edges.

C. Heat Treatment:
   1. Ensure heat-strengthened and tempered glass is examined by glass manufacturer to detect and discard lights which exceed GANA and industry standard tolerances for bow.
   2. Where strengthening process results in essentially parallel ripples or waves, maximum allowable deviation from flatness at any peak-to-valley is 0.003 inch.
   3. Where bow tolerance and wave tolerance differ, stricter requirement governs.

D. Insulating Glass:
   1. Fabricate insulated glass with double edge seals.
   2. Provide continuous (including corners) primary seal between glass and desiccant filled spacer fabricated from extruded polyisobutylene.
   3. Provide secondary seals completely covering spacer without voids or gaps and continuously bonded to both panes of glass.
   4. Provide General Electric IGS 3204 or Dow Corning 982 secondary seals for units which will be attached to frames with silicone sealant.
   5. Verify thickness of secondary seal for silicone supported units for structural adequacy by testing.
   6. Ensure edge seal is capable of transferring at least 3 times force per linear inch produced by design pressure acting on outdoor glass alone or on indoor glass alone.

PART 3 - EXECUTION

3.1 EXAMINATION

A. Examine conditions and proceed with work when substrates are ready.

B. Verify that openings for glazing are correctly sized and within tolerances.

C. Verify that glazing channel surfaces or recesses are clear, free of burrs, obstructions, irregularities, and glass is free of edge damage or imperfections.

D. Examine existing windows and replace cracked and broken glass.

3.2 PREPARATION

A. Clean contact surfaces with solvent and wipe dry.

B. Seal porous glazing channels or recesses with substrate compatible primer or sealer.

C. Prime surfaces scheduled to receive sealant, if required by sealant manufacturer.

DocuSign Envelope ID: 330DEBD6-9A9E-4F34-BDCC-1AC1BAA701E9

D. Verify that materials used for cleaning edges of sealed insulating units are compatible with sealants and components and will not damage or cause deterioration of the integrity of the sealed insulating unit.

3.3 INSTALLATION

A. Install glass units in accordance with manufacturer's instructions. Ensure weep and drainage holes are not blocked by sealants or setting blocks.

B. Glazing Film:
   1. Remove existing letter from interior of building glazing prior to beginning work.
   2. Install glazing film in accordance with manufacturer's instructions.
   3. Install to achieve appearance as indicated on Drawings.
   4. Install to ensure film is free from air bubbles, wrinkles, curled edges, and other installation deformities.
   5. Neatly trim to frames.

C. Dry Method (Tape and Tape):
   1. Cut glazing tape to length and install against permanent stop, projecting 1/16 inch above sight line.
   2. Place setting blocks at 1/4 points with edge blocks no more than 6 inches from corners.
   3. Rest glass on setting blocks and push for full contact and adhesion at perimeter.
   4. Place glazing tape on free perimeter of glass in same manner described above.
   5. Install removable stop, avoid tape displacement, exert pressure on tape for full contact.
   6. Knife trim excess or protruding tape.

D. Tempered Glass:
   1. Do not cut, seam, nip or abrade tempered glass.
   2. Install in windows and sidelights where required by code.

E. Replace broken, loose, and cracked glass in existing windows using clear glass and glazing methods to match existing.

3.4 FIELD QUALITY CONTROL

A. Hose Test: Perform field check for water leakage on all existing windows, including sawtooth clerestory windows using AAMA 501.2 test method.
   1. No water leakage allowed, as defined in this Section.
   2. Test all lites in all existing windows to verify watertightness.
   3. Provide scaffold, hose, and water supply to perform tests, plus repeat unsuccessful tests after remedial work.
   4. Ensure remedial measures maintain standards of quality and durability of original design. Remedial measures are subject to approval of Architect.
   5. Remove, clean, and reglaze glass openings exhibiting leaks; retest with water to verify no leaks exists.

3.5 PROTECTION

A. Protect finished Work.

B. After installation, mark glass pane with an "X" by using removable plastic tape or paste.

3.6 CLEANING

A. Remove excess glazing materials from finished surfaces.

B. Remove labels after work is completed.

C. Wash and polish both faces not more than 7 days prior to Owner's acceptance of work.

D. Comply with glass manufacturer's recommendations for final cleaning.

END OF SECTION

DocuSign Envelope ID: 330DEBD6-9A9E-4F34-BDCC-1AC1BAA701E9

SECTION 99-092900

GYPSUM BOARD

PART 1 - GENERAL

1.1 SUMMARY

A. Section Includes:
   1. Mold resistant gypsum board walls and ceilings.
   2. Metal framing.

1.2 DEFINITIONS

A. Wall: A vertical building element used to enclose or separate spaces. Walls include fixed partitions.

1.3 SYSTEM DESCRIPTION

A. Design Requirements: Contractor: Responsible for designing metal framing used to comply with performance requirements, including anchorage to structural system and necessary modifications to meet specified requirements and maintain visual design concepts.

B. Performance Requirements:
   1. Interior Suspended Gypsum Board Ceilings, Soffits, and Bulkheads: Design and install to provide deflection of not more than 1/360 of distance between supports.
   2. Interior Metal Stud/Gypsum Board Assemblies: Design and install to withstand lateral loading (air pressure) of 5 PSF with deflection limit not more than 1/240 of partition height.
   3. Interior Metal Stud/Gypsum Board Assemblies at Locations with Ceramic Tile or Other Hard Surface Finishes: Design and install to withstand lateral loading (air pressure) with deflection limit not more than L/360 of partition height.
   4. Where documents indicate a stud size, size shall be considered minimum. Increase gage to meet minimum performance requirements.
   5. Accommodate building structure deflections in connections to structure.

1.4 SUBMITTALS

A. Product Data:
   1. Submit product data for:
      a. Framing members selected based on span and performance loading for this Project.
      b. Control joints and locations.
      c. Ceiling suspension system.
   2. Include data to indicate framing member materials, product criteria, section properties, load charts, and limitations.
   3. Include information for factory finishes.

B. Submit following Informational Submittals:
   1. Certifications specified in Quality Assurance article.
   2. Manufacturer's instructions. Include applicable temperature and humidity ranges, special procedures, and perimeter conditions requiring special attention.

1.5 QUALITY ASSURANCE

A. Single Source Responsibility: Except where specified otherwise, obtain gypsum board products, trim, joint treatment, and accessories from single manufacturer or from manufacturers recommended by prime manufacturer of gypsum board products.

B. Certifications: Submit manufacturer's certification that products furnished for Project meet or exceed specified requirements.

DocuSign Envelope ID: 330DEBD6-9A9E-4F34-BDCC-1AC1BAA701E9

1.6 DELIVERY, STORAGE, AND HANDLING

A. Storage and Protection:
   1. Store in dry ventilated space off ground.
   2. Protect materials from surface contamination, soiling, corrosion, construction traffic, and damage.
   3. Support on level platform and fully protect from weather and direct sunlight exposure.
   4. Store and support gypsum board in flat stacks to prevent sagging.
   5. Protect materials to keep them dry. Remove wet gypsum board from Project site.
   6. Protect gypsum board panels to prevent damage to edges, ends, and surfaces.
   7. Do not bend or damage metal trim.

1.7 PROJECT CONDITIONS

A. Environmental Requirements: Comply with more restrictive of ASTM C840, or manufacturer's written requirements under which products can be installed.
   1. Maintain minimum uniform 50 degrees F temperature in building for 48 hours before and continuously until applied joint treatment and bonding adhesives are thoroughly dry.
   2. Do not allow ambient temperature to exceed 95 degrees F.
   3. Provide ventilation to remove moisture in excess of that required for drying of joint treatment materials after its application. Avoid drafts during dry, hot weather to prevent too rapid drying.

PART 2 - PRODUCTS

2.1 FRAMING MATERIALS

A. General:
   1. Maximize use of recycled steel content with minimum of 60 percent.
   2. Studs, runners, and furring channels complying with ASTM C645.
   3. Provide with galvanized coating complying with ASTM A653, G40 thickness; rolled channels used in ceilings may be finished with manufacturer's standard rust inhibitive paint.

B. Steel Stud Framing Systems:
   1. Non-load-bearing roll formed galvanized steel.
   2. Wall studs: Channel-shaped design with punched web, manufacturer's standard return flange lip.
   3. Wall Stud Runners: Channel type members, with 1-1/4 inch flanges, and same sheet metal thickness as wall studs.
   4. Extended Leg Ceiling Runners: Channel type members, with 2 inch flanges, and same sheet metal thickness as wall studs.
   5. Bracing Members: Same size as studs.
   6. Wall Studs:
      a. Type 25:
         1) Return flange lip minimum dimension: 3/16 inches.
         2) Flange width minimum dimension: 1-1/4 inches.
         3) Uncoated sheet steel thickness: 0.0179 inches.
      b. Type 22:
         1) Return flange lip minimum dimension: 3/16 inches.
         2) Flange width minimum dimension: 1-1/4 inches.
         3) Uncoated sheet steel thickness: 0.0270 inches.
      c. Type 20:
         1) Return flange lip minimum dimension: 3/16 inches.
         2) Flange width minimum dimension: 1-1/4 inches.
         3) Uncoated sheet steel thickness: 0.0329 inches.

C. Furring Channels: Hat-shape, 7/8 inch high, 26 gage uncoated metal thickness.

D. Ceiling Framing - Channel and Cross Furring System:
   1. Comply with ASTM C754.

DocuSign Envelope ID: 330DEBD6-9A9E-4F34-BDCC-1AC1BAA701E9

2. Main Runner Channels:
   a. Cold-rolled or hot-rolled steel.
   b. Size: 1-1/2 inch minimum.
   c. Weight: 0.45 pounds per foot, minimum.
3. Furring Anchorages: 16 gage thick galvanized wire ties, or wire-type clips.

E. Ceiling Framing - Proprietary Direct Hung Suspension System:
1. At Contractor's option, provide factory fabricated, proprietary system in lieu of channel and cross furring framing system.
2. Provide interlocking cold-rolled sheet steel grid complying with ASTM C635, "Heavy Duty" structural classification.
3. Acceptable Products and Manufacturers:
   a. 640 Drywall Furring System, Chicago Metallic, Chicago, IL.
   b. DFR-Series, Worthington Steel, Malvern, PA.
   c. Rigid X, USG Interiors, Inc., Chicago, IL.

F. Ceiling Attachment Devices:
1. General:
   a. Size devices for 5 times load imposed by completed system as determined in accordance with ASTM E488.
   b. Powder-actuated fasteners in concrete: Size devices for 10 times load imposed by completed system as determined in accordance with ASTM E1190.
2. Hanger Anchorage Devices: Screws, clips, bolts, inserts or other devices applicable to indicated method of structural anchorage for ceiling hangers and whose suitability for use intended has been proven by certified test data.
3. Hangers: Comply with requirements of ASTM C754 for maximum ceiling area and loads to be supported.

2.2 GYPSUM BOARD PRODUCTS

A. Acceptable Manufacturers:
1. Certainteed
2. G-P Gypsum Corporation
3. National Gypsum Company.
4. United States Gypsum Company.

B. Mold Resistant Gypsum Board:
1. Maximize use of recycled or synthetic gypsum with minimum of 5 percent.
2. Maximum available lengths to minimize end-to-end butt joints, square cut ends, tapered edge.
3. Thickness: 1/2 inch, except where indicated otherwise.
4. Provide gypsum panels with glass fiber facer on stud side in lieu of paper-faced products.
5. Acceptable Products and Manufacturers:
   a. Dens Armor Plus, Georgia Pacific LLC, Atlanta, GA 30303.

2.3 METAL TRIM

A. General:
1. Comply with ASTM C1047.
2. Material: Zinc alloy or galvanized steel.
3. Uncoated sheet metal thickness: 26 gage minimum.
4. Flanges designed for concealment in joint compound, flange width to suit installation requirements.

B. Corner Beads at Straight Surfaces:
1. Cornerbead, Clinch-On Products, Mounds View, MN.
2. Wallboard Corner Bead, National Gypsum Company, Charlotte, NC.
3. 100 Series Dur-A-Bead, United States Gypsum Company, Chicago, IL.

C. Edge Trim Beads:
1. L-Bead and U-Bead, Clinch-On Products, Mounds View, MN.

DocuSign Envelope ID: 330DEBD6-9A9E-4F34-BDCC-1AC1BAA701E9

2. Number 100 and 200 Wallboard Casing, National Gypsum Company, Charlotte, NC.
3. 200 Series, United States Gypsum Company, Chicago, IL.

D. Control Joints:
1. V-Shaped slot.
2. Acceptable Products and Manufacturers:
   a. E-Z Strip Expansion Joint, National Gypsum Company, Charlotte, NC.
   b. 093, United States Gypsum Company, Chicago, IL.

2.4 JOINT TREATMENT AND ADHESIVE MATERIALS

A. Joint Compound:
1. Comply with ASTM C475.
2. Board manufacturer's standard ready-mixed joint compounds low-VOC joint compounds with no detectable amounts of crystalline silica based on NIOSH Method 7500.
3. Compounds specifically manufactured for topping coats are not permitted for first coat on metal trim and taping.
4. Mixing:
   a. Mix compounds in strict accordance with manufacturer's directions.
   b. Mix only enough at one time to be used during recommended pot life of compound.

B. Joint Reinforcement Tape for Gypsum Board: Paper reinforcing tape complying with ASTM C475.

C. Adhesives and sealants shall meet or exceed the VOC and chemical component limits of Cal-GREEN Table 5.504.4.1 Adhesive VOC Limit, and Cal-GREEN Table 5.504.4.2 Sealant VOC Limit requirements.

2.5 SURFACING MATERIAL

A. Primer/Surfacer:
1. Flat latex basecoat for use on surfaces located in areas of intense lighting and indicated to receive a Level 4 finish. Basecoat is in addition to primer and finish coating specified in Section 99-099000.
2. Products: Subject to compliance with requirements, provide one of the following products:
   a. “Builders Solution System Interior Latex Primer/Surfacer”, A63W100; Sherwin Williams.
   b. “SHEETROCK First Coat”; USG Corporation.

2.6 ACCESSORIES

A. General: Provide auxiliary materials for gypsum board construction that comply with referenced standards and recommendations of gypsum board manufacturer.

B. Backer Plates:
1. Type: 16 gage uncoated metal thickness steel sheet, galvanized in accordance with ASTM A653, G60.
2. Length: Sufficient to extend to nearest studs beyond maximum dimension of attached item and engage fasteners from attached item; span minimum 3 studs.
3. Height: 6 inch minimum or higher where required to accommodate item being fastened.
4. When manufacturer of attached item has more rigorous mounting plate requirements, comply with manufacturer's requirements.

C. Fasteners:
1. Fasteners for Metal Framing:
   a. Provide fasteners of type, material, size, corrosion resistance, holding power, and other properties required to fasten steel framing and furring members securely to substrates involved.
   b. Comply with the gypsum board manufacturer requirements for indicated applications.
2. Gypsum Board Fasteners:
   a. Self-drilling, self-tapping, bugle head screws conforming to ASTM C1002, length to suit application.

DocuSign Envelope ID: 330DEBD6-9A9E-4F34-BDCC-1AC1BAA701E9

b. Type S screws for 0.0329 to 0.0179 inches; 21 to 26 gage thick metal framing and furring.
c. Type S-12 screws for 0.1046 to 0.0359 inches; 12 to 20 gage thick metal framing and furring.
d. Type G screws for gypsum board to gypsum board.

D. Touch-Up Primer for Galvanized Surfaces: SSPC Paint 20.

PART 3 - EXECUTION

3.1 EXAMINATION

A. Examine conditions and proceed with work when substrates are ready.

B. Verify rough-in utilities and blocking are in proper position.

3.2 PREPARATION

A. Items Which Require Backer Plates or Blocking:
1. Coordinate sizes and locations.
2. Install additional studs for attachment of backer plates and blocking in required locations to receive surface mounted accessories as indicated or as required by accessory manufacturer.
3. Elimination of backer plates and blocking is not permitted.
4. Direct attachment of items to studs is not permitted.

3.3 FRAMING INSTALLATION

A. General:
1. Install in accordance with manufacturer's printed instructions, except for more stringent requirements of these specifications.
2. Install units plumb, level, square, and free from warp and twist while maintaining dimensional tolerances and alignment with surrounding construction.
3. Installation Tolerances:
   a. Ceilings: Install suspension systems that are level to within 1/8 inch in 12 feet measured lengthwise on each member that will receive finishes and transversely between parallel members that will receive finishes.
   b. Partitions:
      1) Maximum variation from true position: 1/8 inch.
      2) Maximum variation of any member from plane: 1/8 inch in 10-0", non-cumulative.
4. Control and Expansion Joints:
   a. Do not bridge building control and expansion joints with metal framing systems.
   b. Install independent framing on each side of joints.

B. Framing:
1. Install in accordance with ASTM C754 and with requirements of ASTM C840 that apply to framing installation, except for more stringent requirements of manufacturer or these Specifications.
2. Suspended Ceilings:
   a. Install channel and cross-furring in accordance with ASTM C754.
   b. Install proprietary systems in accordance with ASTM C636.
   c. Coordinate location of hangers and framing with other construction above ceiling line.
   d. Install ceiling framing independent of walls, columns, and above ceiling non-structural construction.
   e. Install free from contact with insulation and other objects within ceiling plenum that are not part of supporting structural or ceiling suspension system.
   f. Offset hangers only where required to miss obstructions; resist resulting horizontal forces by bracing, or other means.

DocuSign Envelope ID: 330DEBD6-9A9E-4F34-BDCC-1AC1BAA701E9

g. Where width of ducts and other construction within ceiling plenum produces interference with location of hangers required to support standard suspension system members:
   1) Install supplemental suspension members and hangers in form of trapezes or equivalent devices.
   2) Size supplemental suspension members and hangers to support ceiling loads within performance limits established by referenced standards.
h. Do not connect or suspend steel framing from pipes, ducts, and conduit.
i. For proprietary grids, provide attachments and hangers from structural support above, spaced on a grid of 24 by 48 inches.
j. Do not attach hangers to steel deck tabs or directly to metal roof deck. Provide supplementary framing to span between structural framing members when structural framing members are spaced more than 48 inches apart.
k. Reinforce openings in framing which interrupt main runners, furring channels, and bracing. Extend reinforcing minimum of 24 inches past each end of each opening.
l. Proprietary direct hung framing: Tie direct to suspension; interconnect components in accordance with framing system manufacturer's instructions.
m. Space main runners at maximum 48 inches on center, unless otherwise indicated.
n. Space furring channels at maximum 16 inches on center, unless otherwise indicated.
o. Provide additional framing to fulfill structural requirements and for support at recessed fixtures and similar items.
p. Laterally brace entire suspension system.
q. Provide cross and vertical bracing with additional framing to fulfill structural seismic requirements for exterior soffits.

3. Studs and Runners:
   a. Stud Spacing: 16 inches on center, unless otherwise indicated.
   b. Runner Tracks: Provide continuous tracks sized to match studs.
   c. Where walls are indicated to extend to overhead surfaces (ceilings, deck construction, and structural elements), to prevent deflection transfer of structural loads or movements to walls provide either:
      1) Insert studs into runner tracks with minimum 1/2 inch gap between end of stud and inside surface of top and bottom runner. Maintain minimum of 1/2 inch engagement between end of stud and end of legs of top and bottom runners.
      2) Slip joint between walls and structure using top runner nested within 3 inch long segment of extended leg ceiling runner positioned at stud spacing and fastened to overhead surface. Do not fasten top runner to extended leg ceiling runner.
   d. Brace stud framing rigid which is not clad on both sides with gypsum board. Fasten horizontal stud or 1-1/2 inch wide 20 gage galvanized steel straps vertically spaced no more than 36 inches apart with top strap no more than 6 inches from top of wall.
   e. Horizontally align openings in stud webs.
   f. Use full length studs vertically positioned between runner tracks.
   g. Minimum Jamb Stud Framing at Door Openings:
      1) Walls laterally braced by ceiling framing or structure at 9'-0" above finish floor:
         a) Single Doors not Larger than 3'-6" by 9'-0" and not Weighing more than 275 Pounds: 2 Type 25 studs or 1 Type 20 stud.
         b) Paired Doors not Larger than 3'-6" by 9'-0" per leaf and not Weighing more than 275 Pounds per Leaf: 2 Type 20 studs or 1 Type 18 stud.
      2) Walls Laterally Braced by Ceiling Framing or Structure at 12'-0" above Finish Floor:
         a) Single Doors not Larger than 3'-6" by 9'-0" and not Weighing More than 275 Pounds: 2 Type 20 studs or 1 Type 18 stud.
         b) Paired doors not larger than 3'-6" by 9'-0" per leaf and not weighing more than 275 Pounds per leaf: 2 Type 18 studs.
      3) At welded frames with fixed anchor clips, secure studs to jamb anchors clips with not less than two self tapping screws per clip.

DocuSign Envelope ID: 330DEBD6-9A9E-4F34-BDCC-1AC1BAA701E9

4) Provide wall framing above door openings to match wall framing adjoining the opening.
5) Provide one additional stud not more than 6 inches from jamb studs.

h. Minimum Sidelight Framing:
1) Provide 2 Type 25 studs at each jamb or provide 1 Type 20 stud at each jamb.
2) Provide wall framing above and below window and wall openings with wall framing to match wall framing adjoining the opening.
3) Provide 1 additional stud not more than 6 inches from jamb studs.

i. Fabricate corners with a minimum of three studs.

j. Provide additional studs and framing to support wall intersections, termination of walls, at openings and cut-outs and to support built-in anchorage and attachment devices for other work.

k. Locate studs no more than 2 inches from abutting walls, wall corners and other construction. Start typical wall studs 6 inches either side of stud reinforcing or frames.

l. Install electrical outlets and similar junction boxes at indicated locations. Provide additional blocking and straps for proper locations; do not mount on "nearest" stud.

m. Install steel studs so that flanges point in the same direction and so that leading edges or ends of each gypsum board can be attached to open (unsupported) edges of stud flanges first.

4. Curved surfaces:
a. Cut runners through leg and web at 2 inch intervals for arc length. In cutting lengths of runners allow for uncut straight lengths of not less than 12 inches at ends of arcs.
b. Bend runners to uniform curve of radius indicated and locate straight lengths so they are tangent to arcs.
c. Support cut leg of runners by clinching a 1 inch high by 25-gage uncoated sheet steel strip to inside of cut legs using metal lock fasteners.
d. Place runners on 8 foot maximum centers and secure at tangent points to maintain uniform curve.
e. Begin and end each arc with stud and space intermediate studs equally along arcs at stud spacing recommended by gypsum board manufacturer for indicated radii.
f. Attach studs to runners with 3/8-inch long pan head framing screws.
g. On straight lengths at ends of arcs, place studs no greater than 6 inches apart, with last stud left free standing.

5. Backer Plates:
a. Provide backer plate for securing surface mounted fittings, fixtures, accessories, and furnishings, including, but not limited to handrails, grab bars, toilet walls, towel bars, wall mounted door stops, items listed in Mounting Height and Wall Anchorage Schedule, and similar screw- and bolt-fastened items.
b. Secure with sufficient quantity of self-tapping sheet metal screws to sustain loads imposed by items attached to backer plates.

6. Blocking: Coordinate with Section 99-061000 for installation of concealed wood blocking and furring required for securing wood trim, carpentry, woodwork, cabinets, millwork, casework, surface mounted equipment, and similar nail-fastened items.

3.4 GYPSUM BOARD INSTALLATION

A. General:
1. Comply with more stringent requirements of GA 216, ASTM C840, manufacturer, and these Specifications.
2. Install gypsum board panels with face side out.
3. Use boards of maximum length to minimize end joints.
4. Abut boards without forcing; neatly fit ends and edges of board and do not place butt ends against tapered edges with gap between adjacent panels no greater than 1/16 inch. Hold bottom of board 1/4 inch above floor.
5. Support ends or edges of board directly on framing or furring members.

DocuSign Envelope ID: 330DEBD6-9A9E-4F34-BDCC-1AC1BAA701E9

6. Joint Staggering:
   a. Ceilings: Stagger end joints not less than one framing member.
   b. Walls: Stagger vertical joints on opposite side of walls to occur on alternate framing members.
7. Do not locate gypsum board joints within 12 inches of external corners of windows, doors, or other such openings, except when control joints are installed at corners.
8. Cut openings in board with no greater than 1/4 inch gap around electrical outlets, plumbing, light fixtures, piping and other similar penetration items and small enough to be covered by plates and escutcheons.
9. Do not install imperfect, damp and damaged boards.
10. In concealed spaces above ceilings where designated walls extend full height to structure above, install boards in full coverage on both faces of framing system for air and smoke-rated walls.
11. Fit gypsum panels around ducts, pipes, and conduits.
12. Where walls intersect open concrete coffers, concrete joists, and other structural members projecting below underside of floor/roof slabs and decks, cut gypsum panels to fit profile formed by coffers, joists, and other structural members; allow 1/4 to 1/2-inch wide joints to install sealant.
13. In concealed spaces above ceiling where designated chase walls extend full height to structure above, install boards in full coverage on one face of framing system. Fasten horizontal stud or 1-1/2 inch wide 20 gage galvanized steel straps vertically spaced no more than 36 inches apart with top strap no more than 6 inches from top of wall.
14. Attach gypsum panels to steel studs so that leading edge or end of each panel is attached to open (unsupported) edges of stud flanges first.
15. Attach gypsum panels to framing provided at openings and cutouts.
16. Isolate perimeter of non-load-bearing gypsum board walls at structural abutments, except floors, as detailed. Provide 1/4 to 1/2-inch wide spaces and trim edges with LC-bead edge trim where edges of gypsum panels are exposed
17. Control and Expansion Joints: Gypsum Association Publication GA 234.
   a. Spacing: In accordance with GA 234.
   b. Do not bridge building control and expansion joints with gypsum board.. Utilize details shown in referenced standard.
   c. Terminate gypsum board on each side of joints.

B. Fasteners:
   1. Attachment Methods:
      a. Attach board to framing and furring with screws.
      b. Attach board to board with screws.
   2. Except where indicated otherwise, space fasteners in compliance with more restrictive requirements of referenced installation standards or manufacturer's requirements.
   3. Attach board to supplementary framing and blocking which provide additional support at openings and cutouts.

C. Ceilings: Place with long edge perpendicular to orientation of furring or framing members.

D. Single Layer Wall Installation: Install vertically in manner which will minimize end-butt joints.

E. Double Layer Wall Installation:
   1. Install gypsum board for base layer, place long edge parallel to framing or furring members.
   2. Install gypsum board for face layer, place parallel to base layer with offset joints.
   3. Secure base layer with fasteners.
   4. Secure face layer with fasteners or adhesive supplemented with fasteners.

F. Curved Gypsum Board:
   1. Comply with manufacturer's requirements relative to curve radiuses, wetting methods, stacking panels after wetting, and other preparations that precede installing wetted gypsum panels.
   2. Comply with manufacturer's requirements for fastener type and spacing.

DocuSign Envelope ID: 330DEBD6-9A9E-4F34-BDCC-1AC1BAA701E9

3. For curves with less than 10 feet of arc, select gypsum panel lengths and cut them as required to produce one unbroken panel covering each curved surface plus 12-inch long straight sections at ends of curves and tangent to them.
4. Wet gypsum panels on surfaces that will become compressed when panels are installed over a curve and where curve radius prevents using dry panels.
5. Apply gypsum panels with wrapped edges perpendicular to framing.
6. On convex sides of walls, begin installation at one end of curved surface and fasten gypsum panels to framing as they are wrapped around the curve.
7. On concave sides of walls, start fastening panels to stud at center of curve and work outward to panel ends.
8. Fasten panels to framing with screws spaced no greater than 12 inches apart.
9. Allow wetted gypsum panels to dry before applying joint treatment.
10. Instead of using wetted panels, application of multiple layers of 1/4 or 3/8 inch thick gypsum panels to form greater thicknesses is acceptable for non-fire-rated assemblies.

3.5 TRIM INSTALLATION

A. Install trim flush using longest practical length; miter corners and intersections.

B. Fasten flanges by screws, stapling, or clinching in accordance with manufacturer's instructions.

C. Install corner beads at visually-exposed external corners, unless otherwise indicated.

D. Install edge trim where edge of board would be exposed or semi-exposed and where board abuts dissimilar materials.

E. Control Joints: Coordinate placement and locations with Architect prior to commencement of work. Install control joints in accordance with following:
   1. Locate at joints of maximum stress, at points of natural weak planes, such as at openings and at corners of offsets in walls exceeding 30'-0" in length.
   2. Extend control joints from both corners of door frames to top of wall where doors occur in long runs of wall.
   3. Locate in ceilings with area exceeding 900 square feet, where framing or furring changes direction, and spaced apart not more than 30'-0".
   4. Locate in ceilings where wings of "L", "U", and "T" shaped areas are joined.

F. Trim for Curved Surfaces and Edges: Cut flanges at equal size spacings to permit forming to a smooth unsegmented curve.

3.6 GYPSUM BOARD TREATMENTS

A. General:
   1. Apply joint treatment to gypsum board joints (both directions); flanges of corner beads, edge trim, and control joints; penetrations; fasteners; surface defects; and elsewhere to prepare surfaces for decoration and specified levels of gypsum board finish.
   2. Comply with manufacturer requirements for hardening and drying of joint treatment prior to application of succeeding coats.

B. Prefill: Fill open joints, rounded and beveled edges, and damaged areas, flush with adjoining surfaces using prefill compound.

C. Apply joint tape over gypsum board joints and to architectural metal trim with concealed face flanges as required by architectural metal trim manufacturer and as required to prevent cracks from developing in joint compound at flange edges.

D. Levels of Finish:
   1. Comply with GA-214; italicized commentary is excluded; replace words "may" and "should" with "shall."
   2. Locations to Receive Level 4 Finish: Areas to be painted.
      a. In addition to GA-214, Level 4 Finish gypsum board in areas of intense lighting shall receive one coat of specified basecoat/surfacer to entire surface at manufacturer’s recommended coverage rate or mil thickness.

DocuSign Envelope ID: 330DEBD6-9A9E-4F34-BDCC-1AC1BAA701E9

3. Locations to Receive Level 3 Finish: Areas to receive texture finish and areas to receive Moisture resistant gypsum board used as a tile or FRP substrate.
4. Locations to Receive Level 2 finish: Smoke-rated assemblies in ceiling plenums and concealed areas.
5. Locations to Receive Level 1 Finish: Non-fire-rated, and non-smoke-rated assemblies in ceiling plenums and concealed areas.

3.7 ADJUSTING

A. Adjust and align metal framing to properly receive final finishes in accordance with required tolerances.

B. Correct damages, defects, and leave work ready for decoration. Clean compounds from trim. Visible cracks, nail heads, tool marks, waves, distortions, or other similar defects shall not appear in finished work.

3.8 CLEANING

A. Clean as recommended by manufacturer. Do not use materials or methods which may damage finish or surrounding construction.

B. Promptly remove joint compound from surfaces not intended to receive compound.

3.9 PROTECTION

A. Protect finished work.

B. Protect metal framing from damage detrimental to finished work.

END OF SECTION

DocuSign Envelope ID: 330DEBD6-9A9E-4F34-BDCC-1AC1BAA701E9

SECTION 99-099000

PAINTING AND COATING

PART 1 - GENERAL

1.1 SUMMARY

A. Section Includes:
   1. Preparation and priming of surfaces scheduled in PART 2 of this section to receive finish coatings.
   2. Painting and finish coating of exterior and interior items and surfaces, including:
      a. Exposed interior surfaces.
      b. Existing corrugated siding and roofing
      c. Top coat over fiber encapsulating coating.
      d. New metal wall panels
      e. Existing steel windows and doors.
      f. Scheduled and otherwise identified exterior surfaces.
      g. Exposed interior mechanical and electrical equipment.
      h. Exposed interior steel structure, piping, ducts, main and branch fire suppression piping, junction boxes, and conduit.
      i. Exterior new and historic wood doors.
   3. Exterior and interior items and surfaces not requiring painting, unless noted otherwise:
      a. Items with factory applied finishes.
      b. Moving parts of operating units.
      c. Code required labels or equipment identification plates.
      d. Acoustical ceilings.
   4. Field finish coating of shop or factory primed items. Refer to individual Sections for priming requirements.
   5. Finish coatings schedule.
   6. Preparation work and coatings specified in this Section are in addition to shop and factory applied finishes and surface treatment specified in other Sections.
   7. Refer to Divisions 21, 22, 23, and 26 for painting requirements for items in dedicated mechanical and electrical spaces.
   8. Paint all other items unless specifically indicated not to be painted.

B. Related Sections:
   1. Division 21 – Fire Suppression: Piping identification.
   2. Division 22 – Plumbing: Piping identification.
   3. Division 23 – Heating, Ventilating, and Air Conditioning: Mechanical identification.
   4. Division 26 – Electrical: Electrical identification.

1.2 DEFINITIONS

A. Conform to PDCA Glossary for interpretation of terms used in this Section except as modified below.

B. Exposed Surfaces: Surfaces of products, assemblies, and components visible from any angle after final installation. Includes internal surfaces visible when operable doors, panels or drawers are open, and surfaces visible behind registers, grilles, or louvers.

C. Concealed Surfaces: Surfaces permanently hidden from view in finished construction and which are only visible after removal or disassembly of part or all of product or assembly.

D. Inaccessible Spaces: Spaces not intended for human use.

E. Sheen: Degree of luster as measured with specular gloss meter in accordance with ASTM D523:

Flat:	60 degree meter	0 to 3
Low Sheen	60 degree meter	5 to 10
Eggshell:	60 degree meter	10 to 20
Satin:	60 degree meter	25 to 35

DocuSign Envelope ID: 330DEBD6-9A9E-4F34-BDCC-1AC1BAA701E9

Semi-gloss:	60 degree meter	50 to 60
Gloss:	60 degree meter	65 to 80
High Gloss:	60 degree meter	Over 80

F. System DFT: Dry film thickness of entire coating system unless otherwise noted.

1.3 SYSTEM REQUIREMENTS

A. Do not walk upon or stage from low roofs to paint walls above. Use bucket trucks to reach over low roofs.
   1. Asbestos: Existing corrugated siding and roofing are asbestos bearing materials.
   2. Lead Paint:
      a. Building dates prior to 1976 and it is assumed lead-based paint has been used on interior and exterior surfaces.
      b. Do not abrade, sand, or scuff existing painted surfaces.
      c. Powerwash surfaces to prepare for repainting.
      d. Special attention is required for repair of rusted surfaces.

B. Perform testing according to following methods:
   1. Solids Content by Volume: ASTM D2832.
   2. Surface Burning Characteristics: ASTM E84.

C. Interface with Adjacent Systems:
   1. Review other Sections specifying prime coats to ensure compatibility of total coating system for various substrates.
   2. Upon request from other trades, furnish information on characteristics of finish materials proposed for use to ensure compatibility of various coatings.
   3. Test compatibility of existing coatings, including shop applied primers and previously applied coatings, by applying specified special coating to small, inconspicuous area.
   4. If specified coating lifts or blisters existing coating, apply barrier or tie coat as recommended by coating manufacturer.
   5. If no compatible barrier or tie coat exists, remove existing coating completely and apply coating system as specified for new work.

1.4 SUBMITTALS

A. Product Data:
   1. Submit product data, including label analysis for each product proposed for use.
   2. Specifically include percent solids-by-volume, volatile organic compound (VOC) content (g/L), and lead content (percent of weight of dried film).
   3. Schedule:
      a. List each material proposed for use, and cross-reference to specific coating system and substrate application.
      b. Identify each material by manufacturer's catalog number, product name, and generic classification.
      c. Include typewritten list identifying coating systems and colors applied to each room, space, or item.

B. Color and Sheen Samples:
   1. Prepare 1 sample of each opaque finish coating specified in each color and sheen scheduled for appearance verification.
   2. Apply to 12 by 12 by 1/4 inch hardboard. Apply sufficient coating thickness to provide proper hiding and appearance.
   3. Label each sample to indicate material, color, and sheen.

C. Coating System Samples:
   1. Prepare 1 sample of each opaque coating system scheduled on actual substrate materials proposed for use. Apply in most common top coat color scheduled.
   2. Step back each coat and process at least one inch to show bare substrate and each coat and process in system build-up.
   3. Minimum sample size of 4 by 8 inches.

DocuSign Envelope ID: 330DEBD6-9A9E-4F34-BDCC-1AC1BAA701E9

4. Label each sample to indicate materials, color, sheen, DFT of each coat applied, and total system DFT.

D. Submit following Informational Submittals:
1. Certifications specified in Quality Assurance article.
2. Qualification Data: Applicator's qualification data.
3. Manufacturer's instructions.
4. Test reports for film thickness, adhesion and soluble salt.

E. Closeout Submittals:
1. Warranty: Submit specified warranty.

1.5 QUALITY ASSURANCE

A. Single Source Responsibility:
1. Provide products of single manufacturer for use in each coating system.
2. Do not mix products of different manufacturers without approval of Architect and manufacturers involved.
3. Provide manufacturer recommended materials (base and tints) for deep tone colors.

B. Applicator Qualifications: Company specializing in commercial painting and finishing with 3 years documented experience.

C. Regulatory Requirements:
1. Comply with CPSC 16 CFR 1303 and other applicable federal, state, and local regulations limiting lead content of coatings to be applied.

D. Certifications: Submit certification from manufacturer that materials furnished for use on this Project meet or exceed specified requirements and comply with applicable federal, state, and local requirements regarding lead and VOC content.

1.6 FIELD SAMPLES

A. Sample Installation: Duplicate finishes of approved coating system samples on wall surfaces and other interior and exterior components selected by Architect.

B. Provide full-coat finish on at least 100 sq ft of surface until required color, sheen, and texture are obtained. Simulate finished lighting conditions for review of in-place work.

C. Request review by Architect of first finished room, space, or item for each coating system for color, texture, quality, and workmanship.

1.7 DELIVERY, STORAGE, AND HANDLING

A. Deliver, store, and handle products in accordance manufacturer’s instructions.

B. Deliver products to site in manufacturer's sealed and labeled containers; inspect to verify compliance with specified requirements.

C. Label containers to indicate manufacturer's name, product name and type of coating, brand code or stock number, date of manufacture, coverage, surface preparation, drying time, cleanup, color designation and instructions for mixing and reducing.

D. Store coating materials in tightly covered containers in well ventilated area at ambient temperatures of 45 degrees F minimum and 90 degrees F maximum, unless required otherwise by manufacturer. Maintain containers in clean condition, free of foreign materials and residue with labels in legible condition.

E. Take precautionary measures to prevent fire hazards and spontaneous combustion.

1.8 PROJECT CONDITIONS

A. Environmental Conditions: Comply with more restrictive of following or manufacturer's requirements under which systems can be applied.
1. Provide continuous ventilation during application of coatings to exhaust hazardous fumes.
2. Provide heating necessary to maintain surface and ambient temperatures within specified limits.

DocuSign Envelope ID: 330DEBD6-9A9E-4F34-BDCC-1AC1BAA701E9

3. Maintain temperature and humidity conditions for minimum 24 hours before, during, and 48 hours after application of finishes, unless longer times are required by manufacturer.
4. Do not permit wide variations in ambient temperatures which might result in condensation on freshly coated surfaces.
5. Provide illumination of not less than 80 footcandles measured mid-height at substrate surface during application of coatings.
6. Apply water reducible coatings only when ambient and surface temperatures are between 50 degrees F and 90 degrees F.
7. Apply solvent reducible coatings only when ambient and surface temperatures are between 45 degrees F and 90 degrees F.
8. Do not apply coatings under any of following conditions:
   a. When surfaces are damp or wet.
   b. During rain, fog, or mist.
   c. When relative humidity is less than 20 percent or exceeds 85 percent.
   d. When temperature is less than 5 degrees F above dew point.
   e. When dust may be generated before coatings have dried.
   f. In direct sunlight.
   g. When wind velocity is above 20 mph.
9. Application of coatings may continue during inclement weather provided work areas and surfaces to be coated are enclosed and specified environmental conditions are maintained.

1.9 WARRANTY

A. Warrant installation to be free from defects in material and workmanship for 5 years.

B. Repair or replace defects occurring during warranty period.

C. Defects include but are not limited to pinholes, crazing or cracking, loss of adhesion to substrate, deficient thickness, improper materials and workmanship.

1.10 EXTRA STOCK MATERIAL

A. Provide 1 unopened gallon container of each type of opaque top coating in each color and sheen used on Project.

B. Store where directed with labels intact.

PART 2 - PRODUCTS

2.1 COATING MATERIALS - GENERAL

A. Coatings:
   1. Ready-mixed, factory tinted.
   2. Use manufacturer’s appropriate base materials to achieve required colors.
   3. Fully grind pigments to maintain soft paste consistency in vehicle.
   4. Capable of being dispersed into uniform, homogeneous mixture.
   5. Possess good flowing and brushing properties.
   6. Capable of drying or curing free of streaks or sags, and yielding specified finish.
   7. VOC content of field applied coatings shall comply with local governing authorities.

B. Paint Maximum Product Emissions Limits: Top coat and primer interior paints must meet or not exceed the VOC (Volatile Organic Compounds) limits of the current requirements of Green Seal Standards GS-11 - Paints in the building, and Cal-GREEN Table 5.504.4.3 for VOC Content Limits for Architectural Coatings.

C. Cal-GREEN Requirements for typical paint coatings:
   1. Primers, Sealers, and Undercoaters: 100 grams per liter of product minus water
   2. Flats: 50 grams per liter of product minus water
   3. Non-flats: 100 grams per liter of product minus water
   4. Non-flat High Gloss: 150 grams per liter of product minus water

DocuSign Envelope ID: 330DEBD6-9A9E-4F34-BDCC-1AC1BAA701E9

2.2 FINISH PAINTING SYSTEMS

A. General: System DFT specified identifies the minimum of the acceptable range.

B. Exterior Coating Systems:
   1. Existing Fiber Cement Corrugated siding and roofing:
   2. System No. EC-1 (Latex Finish):
      a. Sheen: Eggshell.
      b. Prime Coat: Alkali Resistant Primer at 1.5 mils.
      c. Under Coat: Exterior Latex House Paint at 1.5 mils.
      d. Top Coat: Exterior Latex House Paint at 1.5 mils.
      e. System DFT: 3.0 mils.
   3. Corrugated siding and roofing Covered with Fiber Encapsulating Coating:
   4. System No. EC-1 (Latex Finish):
      a. Sheen: Eggshell.
      b. First Coat: Exterior Latex House Paint at 1.5 mils.
      c. Top Coat: Exterior Latex House Paint at 1.5 mils.
      d. System DFT: 3.0 mils.

C. Metal Surfaces:
   1. Paint System No. PT-M2 (Latex Finish):
      a. Surface: Exterior non-ferrous metals and zinc-coated (galvanized) steel.
      b. Sheen: Semi-Gloss.
      c. Prime Coat: Universal Primer at 2.0 mils.
      d. Under Coat: Premium Acrylic Latex at 1.5 mils.
      e. Top Coat: Premium Acrylic Latex at 1.5 mils.
      f. System DFT: 5.0 mils.
   2. Paint System No. PT-M4 (Latex Finish):
      a. Surface: Interior non-ferrous metals and zinc-coated (galvanized) steel.
      b. Sheen: Semi-Gloss.
      c. Prime Coat: Universal Primer at 2.0 mils.
      d. Under Coat: Low-VOC interior latex/acrylic based paint at 1.4 mils.
      e. Top Coat: Low-VOC interior latex/acrylic based paint at 1.4 mils.
      f. System DFT: 4.8 mils
   3. Paint System No. PT-M8 (Latex Finish):
      a. Surface: Interior ferrous metals - uncoated.
      b. Sheen: Semi-Gloss.
      c. Prime Coat: Universal Primer at 3.0 mils.
      d. Under Coat: Low-VOC interior latex/acrylic based paint at 1.4 mils.
      e. Top Coat: Low-VOC interior latex/acrylic based paint at 1.4 mils.
      f. System DFT: 5.8 mils.
   4. Paint System No. PT-M10 (Latex Finish):
      a. Surface: Exterior ferrous metals - previously coated.
      b. Sheen: Semi-Gloss.
      c. Prime Coat: Touch-up existing with compatible primer.
      d. Under Coat: Exterior Premium Acrylic Latex Paint at 2.5 mils.
      e. Top Coat: Exterior Premium Acrylic Latex Paint at 2.5 mils.
      f. System DFT: 5.0 mils (excluding existing and touch-up primer).
   5. Paint System No. PT-M12 (Latex Finish):
      a. Surface: Interior ferrous metals - previously coated.
      b. Sheen: Semi-Gloss.
      c. Prime Coat: Touch-up existing with compatible primer.
      d. Under Coat: Low-VOC interior latex/acrylic based paint at 1.4 mils.
      e. Top Coat: Low-VOC interior latex/acrylic based paint at 1.4 mils.
      f. System DFT: 2.8 mils (excluding existing and touch-up primer).

DocuSign Envelope ID: 330DEBD6-9A9E-4F34-BDCC-1AC1BAA701E9

D. Gypsum Board, MDF Base and Paint Grade Wood Door Surfaces:
   1. Paint System No. PT-G5 (Non VOC, Latex/Acrylic Finish):
      a. Surface: Interior gypsum board walls and ceilings; MDF base, and MDO paint grade wood doors.
      b. Sheen: Eggshell typical UNO.
      c. Prime Coat: Manufacturers standard Non VOC Primer at 1.0 mils.
      d. Under Coat: Low-VOC interior latex/acrylic based paint at 1.4 mils.
      e. Top Coat: Low-VOC interior latex/acrylic based paint at 1.4 mils.
      f. System DFT: 3.8 mils.
   2. Exterior Wood Doors
      a. Sheen: Semi-Gloss.
      b. Prime Coat: Manufacturer's recommended wood Primer at 1.0 mils.
      c. Under Coat: Exterior Latex House Paint at 1.5 mils.
      d. Top Coat: Exterior Latex House Paint at 1.5 mils.
      e. System DFT: 4.0 mils.

2.3 PRIMERS

A. Exterior Cal-GREEN Compliant Alkali Resistant Primer:
   1. Kelly-Moore: KM 247 ACRY-SHIELD 100% Acrylic Exterior Masonry Primer
   2. Benjamin Moore: Regal Select Primer (546)
   3. Dunn-Edwards: Eff-Stop Primer(ESPR00)
   4. Glidden Professional: Bond Prep Sealer (3030)
   5. Sherwin-Williams: Loxon Masonry Primer (A24W8300)
   6. Vista: Uniprime II Acrylic Masonry Primer (4600)

B. Universal Metal Primer:
   1. Kelly-Moore: KM 5725 DTM Acrylic Primer/Finish
   2. Benjamin Moore: Acrylic Metal Primer (M04)
   3. Dunn-Edwards: Ultra Grip Premium ((UGPR00)
   4. Glidden Professional: Devoe Devflex DTM Primer (4020).
   5. Sherwin-Williams: Pro-Industrial Pro-Cryl Universal Primer (B66-310).
   6. Vista: Protec Primer (No. 9600).

C. Interior Low VOC Latex Primer:
   1. Kelly-Moore: KM 971 ACRY-PLEX Interior PVA Primer/Sealer ZERO VOC
   2. Benjamin Moore and Company: Natura Primer (511).
   3. Dunn-Edwards: ENSO Zero VOC Interior Primer (ENSO 00).
   4. Glidden Professional: Lifemaster No VOC Interior Primer (GP 9116).
   5. Sherwin-Williams: Harmony Primer (B11W900)
   6. Vista: Carefree Earth Coat Zero VOC Primer (6000)

2.4 WATER REDUCIBLE PAINTS

A. Exterior Premium Acrylic Latex House Paint:
   1. Kelly-Moore:
      a. Flat: KM 1240 Acryshield 100% Acrylic Flat Paint
      b. Low Sheen: KM 1245 Acryshield 100% Acrylic Low Sheen Paint
      c. Satin: KM 1247 Acryshield 100% Acrylic Satin Enamel
      d. Semi-Gloss: KM 1250 Acryshield 100% Acrylic Semi-Gloss Enamel
      e. Gloss: NA
   2. Benjamin Moore and Company:
      a. Flat: Regal Select Flat (400)
      b. Satin: Regal Select Low Luster (401)
      c. Semi-Gloss: Regal Select Soft Gloss (402)
      d. Gloss: NA

DocuSign Envelope ID: 330DEBD6-9A9E-4F34-BDCC-1AC1BAA701E9

3. Dunn-Edwards:
   a. Flat: Evershield Flat (EVSH10)
   b. Satin: Evershield Low Sheen (EVSH40-0).
   c. Semi-Gloss: Evershield Semi Gloss (EVSH50)
   d. Gloss: Evershield Gloss (EVSH60-0).
4. Glidden Professional:
   a. Flat: Fortis 450 Flat (6201).
   b. Satin: Fortis 450 Satin (6403)
   c. Semi-Gloss: Fortis 450 Semi-Gloss (6407)
   d. Gloss: NA
5. Sherwin-Williams:
   a. Flat: Duration Flat (K32).
   b. Satin: Duration (K33).
   c. Semi-Gloss: Metalatex SG (B42)
   d. Gloss: Duration (K34)
6. Vista:
   a. Flat: Duratone (2000)
   b. Eggshell: Carefree 100% Acrylic Eggshell (8300)
   c. Semi-Gloss: Carefree 100% Acrylic Semi Gloss (8400)
   d. Gloss: Carefree 100% Acrylic Gloss (8500)

B. Low-VOC Interior Latex/Acrylic Based Paint:
1. Kelly-Moore:
   a. Flat: KM 1500 ENVIRO-COAT Zero VOC 100% Acrylic Interior Flat Wall Paint
   b. Eggshell: KM 1510 ENVIRO-COAT Zero VOC 100% Acrylic Interior Eggshell Enamel
   c. Semi-Gloss KM 1520 ENVIRO-COAT Zero VOC 100% Acrylic Interior Semi-Gloss Enamel
   d. Gloss: NA
2. Benjamin Moore and Company:
   a. Flat, Natura Flat (512)
   b. Eggshell, Natura Eggshell (513)
   c. Semi-Gloss, Natura Semi-Gloss (514)
3. Dunn-Edwards:
   a. Flat: Enso Flat (ENSO 10)
   b. Eggshell: Enso Eggshell (ENSO 40)
   c. Semi-Gloss: Enso Semi Gloss (ENSO 50).
4. Glidden Professional:
   a. Flat: Lifemaster No VOC Flat (9100).
   b. Eggshell: Lifemaster No VOC Eggshell (9300).
   c. Semi-Gloss: Lifemaster No VOC Semi-Gloss (9200).
5. Sherwin-Williams:
   a. Flat: Harmony Flat (B5).
   b. Eggshell: Harmony Eggshell (B9)
   c. Semi-Gloss: Harmony Semi-Gloss (B10).
6. Vista;
   a. Flat: Carefree Earth Coat Zero VOC Flat (6100)
   b. Eggshell: Carefree Earth Coat Zero VOC Eggshell (6300)
   c. Semi-Gloss: Carefree Earth Coat Zero VOC Semi-Gloss (6400)

2.5 ACCESSORY MATERIALS

A. Muriatic acid, mildewcide, TSP (tri-sodium phosphate), acidic-detergent, zinc sulfate, sodium metasilicate, and solvent: Commercially available, non-damaging to surface being cleaned; as specified in PDCA Specification Manual; acceptable to coating manufacturer.

B. Metal Conditioner: Proprietary phosphoric acid based, etching type solution; acceptable to coating manufacturer.

DocuSign Envelope ID: 330DEBD6-9A9E-4F34-BDCC-1AC1BAA701E9

C. Rust Inhibitor: Water containing 0.32 percent of sodium nitrite and 1.28 percent by weight of secondary ammonium phosphate (dibasic); or water containing 0.2 percent by weight of chromic acid or sodium chromate or sodium dichromate or potassium dichromate.

D. Spackling compound, putty, plastic wood filler, liquid de-glosser, latex patching plaster, latex base filler, thinners, and other materials not specifically indicated but required to achieve finishes specified: Pure, of highest commercial quality, compatible with coatings and acceptable to coating manufacturer.

E. Do not use products of different manufacturers in combination.

2.6 MIXING

A. Use factory prepared colors matching approved samples. Site tinting will not be permitted.

B. Thoroughly mix and stir coatings before use to ensure homogeneous dispersion of ingredients. Prior to application, blend multiple containers of same material and color by pouring from one container to another several times to ensure uniform consistency, color, and smoothness.

C. Mix only in clean mixing pails of material recommended by manufacturer to avoid contamination.

D. Remove film which may form on surface of material in containers and strain material before using. Stir frequently during use to maintain pigments in suspension. Do not stir film into material.

E. Apply coatings of consistency recommended by manufacturer. Thin only within recommended limits using thinners approved by coating manufacturer.

2.7 COLORS AND FINISHES

A. Colors: Based on Kelly Moore.
   1. **P1**- Bay Bridge White.
   2. **P2** - Alumi-non.
   3. **P3** - Gray Dolphin

B. Sheen:
   1. Ceilings and Walls: Satin/Eggshell elsewhere unless noted otherwise.
   2. Ceilings and Walls in Wet Areas: Semi-Gloss, unless noted otherwise.
   3. Metal Doors and Frames: Semi-gloss, unless noted otherwise.
   4. Metals with accent colors – Semi-gloss, unless noted otherwise.
   5. Painted Wood: Semi-gloss, unless noted otherwise.

PART 3 - EXECUTION

3.1 EXAMINATION

A. Examine conditions and proceed with work when substrates and environmental conditions are ready.

B. Measure moisture content of substrates using recently calibrated electronic moisture meter. Do not apply coatings if moisture content of surfaces exceeds lesser of percentages listed below or those required by coating manufacturer. If excess moisture content exists and cannot be reduced, obtain written approval of coating manufacturer before application of coatings.
   1. Gypsum board: 17 percent.
   2. Architectural woodwork, trim, cabinets, and casework: 10 percent; measure with resistance-type meter in accordance with ASTM D4442.
   3. Common board and dimension lumber: 12 percent; measure with resistance-type meter in accordance with ASTM D4442.
   4. Masonry, concrete, CMU, and Portland cement plaster: 17 percent for solvent reduced coatings. Test concrete floors in accordance with ASTM D4263.
   5. Canvas and cotton insulation coverings: 12 percent max.

C. Prior to applying alkali and acid sensitive coatings, test surface pH with universal pH paper placed against wetted surface. Substrate pH shall not exceed pH of clean wash water.

D. Beginning of execution constitutes acceptance of existing conditions.

DocuSign Envelope ID: 330DEBD6-9A9E-4F34-BDCC-1AC1BAA701E9

3.2 PREPARATION - GENERAL

A. Protect completed construction from damage. Furnish drop cloths, shields, and protective methods to prevent spray, splatter, or droppings from disfiguring other surfaces.

B. Remove surface hardware, mechanical diffusers, escutcheons, registers, electrical plates, light fixture trim, fittings, fastenings and similar items prior to preparing surfaces for finishing. Provide surface-applied protective masking for non-removable items. Carefully store removed items for reinstallation.

C. Remove mildew by scrubbing with mildewcide. Rinse thoroughly with clean water.

D. Before beginning application of coatings, ensure surfaces are clean, dry, and free of dirt, dust, rust or rust scale, oil, grease, mold, mildew, algae, efflorescence, release agents, or any other foreign material which could adversely affect coating adhesion or finished appearance.

3.3 SURFACE PREPARATION FOR NEW WORK

A. General:
   1. Correct minor defects.
   2. Remove temporary labels, wrappings, and protective coverings from surfaces to be coated.
   3. Seal stains, marks, and other imperfections which may bleed through surface finishes.

B. Aluminum:
   1. Clean in accordance with SSPC SP1 "Solvent Cleaning".
   2. Apply etching type primer.

C. Cloth Insulation Coverings:
   1. Remove dirt, grease, oil, and other foreign substances.
   2. Seal with thin coating of drywall compound thinned with latex PVA primer to working consistency.

D. Concrete:
   1. Prior to application of coatings, allow surfaces to cure minimum 60 days.
   2. Remove dirt, scale, powder, laitance, and bond breakers by light sandblasting to minimum 1.5 mil profile.
   3. Remove oil and grease with solution of TSP; rinse well.
   4. Remove stains caused by weathering or corroding metals with solution of sodium metasilicate applied after thoroughly wetting surface with potable water; allow to dry.
   5. Fill cracks and voids with compatible filler.

E. Gypsum Board:
   1. Refer to Section 99-092900 for general surface preparation.
   2. Fill remaining cracks, depressions, holes and other irregularities with spackling compound.
   3. Sand rough or high spots left by joint cement or spackling compound without damaging paper face.
   4. Remove dust by wiping with damp cloths or vacuuming.

F. Masonry:
   1. Prior to application of coatings, allow surfaces to cure minimum 28 days.
   2. Remove dirt, scale, loose mortar, efflorescence, and powder by wire brushing or by other approved methods.
   3. Remove oil and grease with solution of TSP, rinse, and allow to dry.
   4. Remove stains caused by weathering or corroding metals with solution of sodium metasilicate applied after thoroughly wetting surface with potable water; allow to dry.
   5. Wash and neutralize surfaces as recommended by coating manufacturer, rinse, and allow to dry.

G. Steel - Uncoated:
   1. Remove weld spatter by chipping or grinding.
   2. Clean interior and weather protected steel in accordance with SSPC SP2 "Hand Tool Cleaning" and SP3 "Power Tool Cleaning". Clean areas of excessive corrosion or scale in accordance with SSPC SP7 "Brush-Off Blast Cleaning".

DocuSign Envelope ID: 330DEBD6-9A9E-4F34-BDCC-1AC1BAA701E9

3. Clean exterior steel permanently exposed to elements in accordance with SSPC SP6 "Commercial Blast Cleaning".
4. Apply metal conditioner to bare surfaces in accordance with manufacturer's recommendations, paying particular attention to abrasions, welds, bolts, and nuts. Allow to set as recommended by solution manufacturer. Rinse with clean water with rust inhibitor mixed with water or applied immediately following rinse. Allow to dry.
5. Prime coat immediately.

H. Steel - Prime Coated:
1. Remove loose primer and rust to feather-edge at adjacent sound primer by cleaning in accordance with SSPC SP2 "Hand Tool Cleaning" and SP3 "Power Tool Cleaning".
2. Apply metal conditioner to abrasions, welds, bolts, and nuts in accordance with manufacturer's recommendations. Allow to set as recommended by manufacturer. Rinse with clean water with rust inhibitor mixed with water or applied immediately following rinse. Allow to dry.
3. Prime coat bare areas immediately.

I. Galvanized Steel: Remove soluble and insoluble contaminants and corrosion. Sweep (Abrasive) Blasting per ASTM D6386 to achieve a uniform anchor profile (1.0 - 2.0 mils).

3.4 SURFACE PREPARATION OF PREVIOUSLY COATED SURFACES

A. General:
1. Remove cracked and deteriorated sealants and calking.
2. Remove chalk deposits and loose, blistered, peeling, scaling, or crazed finish to bare base material or sound substrate by scraping and sanding.
3. Wash surfaces with solution of TSP to remove wax, oil, grease, and other foreign material; rinse, and allow to dry. Exercise caution that TSP solution does not soften existing coating.
4. Abrade glossy surfaces by sanding or wiping with liquid de-glosser.
5. Remove mildew as specified above.
6. Test compatibility of existing coatings by applying new coating to small, inconspicuous area. If new coatings lift or blister existing coatings, request recommendation from Architect.
7. Apply specified primer to surfaces scheduled to receive coatings.

B. Concrete, Masonry, and corrugated siding:
1. Fill cracks and voids with latex base filler.
2. Apply masonry conditioner to masonry surfaces in accordance with manufacturer's instructions.
3. Apply primer over bare surfaces and filler material.

C. Gypsum Wallboard:
1. Fill cracks and voids with spackling compound.
2. Apply primer over bare surfaces and newly applied texture coatings.

D. Metal:
1. Remove rust from surfaces to bare metal in accordance with SSPC SP6 "Commercial Blast Cleaning".
2. Exercise care not to remove galvanizing.
3. Complete preparation as specified for new work.

3.5 APPLICATION

A. General Requirements:
1. Coat all surfaces specified, scheduled, illustrated, and otherwise exposed unless specifically noted otherwise.
2. Apply coatings of type, color, and sheen as scheduled.
3. Apply products in accordance with manufacturer’s instructions. Use application materials, equipment, and techniques as recommended by coating manufacturer and best suited for substrate and type of material being applied.
4. Do not apply finishes to surfaces that are improperly prepared.
5. Number of coats specified are minimum number acceptable.

DocuSign Envelope ID: 330DEBD6-9A9E-4F34-BDCC-1AC1BAA701E9

6. Apply coating systems to total dry film thickness scheduled. Apply material at not less than manufacturer's recommended spreading rate. Do not exceed maximum single coat thickness recommended by coating manufacturer. Do not double-back with spray equipment building up film thickness of two coats in one pass.
7. Ensure that edges, corners, crevices, welds, and exposed fasteners receive dry film thickness equivalent of flat surfaces.
8. Finish edges of coatings adjoining other materials or colors sharp and clean, without overlapping.

B. Prime Coats:
1. Apply initial coat to surfaces as soon as practical after preparation and before subsequent surface deterioration.
2. Backprime exterior woodwork with specified primer.
3. Backprime interior woodwork scheduled to receive transparent finish with gloss varnish reduced 25 percent with mineral spirits.
4. Apply primer to wood and metal sash before field glazing.

C. Intermediate and Top Coats:
1. Allow previously applied coat to dry before next coat is applied.
2. Sand and dust lightly between coats as recommended by coating manufacturer.
3. Apply each coat to achieve uniform finish, color, appearance, and coverage free of brush and roller marks, runs, misses, visible laps or shadows, hazing, bubbles, pin holes, or other defects.
4. If stains, undercoats, or other conditions show through final topcoat, correct defects and apply additional topcoats until coating film is of uniform finish, color, and appearance.

D. Finish Matching:
1. Finish closets same as adjoining rooms, unless otherwise specified.
2. Finish tops, bottoms, and edges of doors same as door faces. Apply sanding sealer to cut-outs. When faces are different colors, finish edges of doors to match space from which they are visible when door is in partly open position.
3. Finish other surfaces not specifically mentioned to match adjoining surfaces.

E. Mechanical and Electrical Items:
1. Refer to Division 21 – Fire Suppression, Division 22 – Plumbing, Division 23 - Heating, Ventilating, and Air Conditioning, and Division 26 - Electrical for schedule of color coding and identification banding of equipment, ductwork, piping, and conduit. Color code equipment, piping, conduit and exposed ductwork in accordance with requirements indicated.
2. Prior to finishing mechanical and electrical items, remove louvers, grilles, covers, and access panels and finish separately. Replace when dry.
3. Paint interior surfaces of ducts, and heating cabinets that are visible or reflective behind grilles and registers with one coat of flat black paint.
4. Finish dampers visible behind grilles and registers to match surface finish.
5. Paint both sides and edges of plywood equipment backboards before installing equipment.
6. Do not apply coatings over name plates, tags, or other equipment identification.

F. Reinstall trim, fittings, and other items removed for finishing.

3.6 FIELD QUALITY CONTROL

A. Test film thickness of each coat with wet film gage on each surface to ensure coatings are being applied to proper thickness.

B. Perform adhesion tape test for each substrate material in accordance with ASTM D3359.

C. Owner requires testing of painting for soluble salts. Coordinate requirements and test procedures with Owner.

D. Request review of each applied coat by Architect before application of successive coats. Only reviewed coats will be considered in determining number of coats applied.

DocuSign Envelope ID: 330DEBD6-9A9E-4F34-BDCC-1AC1BAA701E9

E. Immediately prior to Substantial Completion, perform detailed inspection of painted surfaces and repair or refinish abraded, stained, or otherwise disfigured surfaces.

F. Testing: Owner reserves right to employ independent testing agency to verify acceptability of substrates and conformance of coating materials to specified requirements; and to test coating quality and dry film thickness.

G. If test results show that material does not comply with specified requirements, remove noncomplying coatings, recoat with acceptable material, and pay costs of additional testing to ensure compliance.

3.7 CLEANING

A. Promptly remove spilled, splashed, or spattered coatings. Clean spots, oil, and other soiling from finished surfaces using cleaning agents and methods which will not damage materials.

B. If completed construction is damaged beyond normal cleaning or repair by painting operations, replace damaged items at no additional cost to Owner.

C. Maintain premises and storage areas free of unnecessary accumulation of tools, equipment, surplus materials, and debris.

D. Collect waste, cloths, and material which may constitute fire hazards and place in closed metal containers; remove from site daily along with empty containers.

3.8 PROTECTION

A. Protect finished work.

B. Protect work of other trades against damage from coating activities. Correct damage by cleaning, repairing, replacing, and recoating as acceptable to Architect.

C. Provide "Wet Paint" signs and other methods to protect newly coated surfaces. Remove when directed or when no longer needed.

END OF SECTION

DocuSign Envelope ID: 330DEBD6-9A9E-4F34-BDCC-1AC1BAA701E9

SECTION 99-099600

HIGH PERFORMANCE COATINGS

PART 1 - GENERAL

1.1 SUMMARY

A. Section Includes: Exterior Coatings for:
   1. Exterior ferrous metal.
   2. Other steel items as identified.

1.2 DEFINITIONS

A. DFT: Dry film thickness.

B. Sheen: Degree of luster as measured with specular gloss meter in accordance with ASTM D523:

1.	Flat:	85 degree meter	Below 15
2.	Eggshell:	60 degree meter	5 to 20
3.	Satin:	60 degree meter	15 to 35
4.	Semi-gloss:	60 degree meter	30 to 65
5.	Gloss:	60 degree meter	65 to 80
6.	High Gloss:	60 degree meter	Over 80

1.3 SYSTEM REQUIREMENTS

A. Testing Requirements: Test according to following methods.
   1. Abrasion: ASTM D4060.
   2. Adhesion: ASTM D3359, D4541.
   3. Humidity: ASTM D4585.
   4. Salt Spray (Fog): ASTM B117.
   5. Solids Content by Volume: ASTM D2832.
   6. Surface Burning Characteristics: ASTM E84.
   7. Volatile Organic Compound Content: EPA TM-24 (40 CFR 60, Appendix A).

B. Application Requirements: Apply scheduled coatings to exposed surfaces of items scheduled and otherwise indicated unless specifically noted otherwise.

C. Interface with Adjacent Systems:
   1. Review other Sections specifying prime coats to ensure compatibility of total coating system for various substrates.
   2. Upon request from other trades, furnish information on characteristics of finish materials proposed for use to ensure compatibility of various coatings.
   3. Test compatibility of existing coatings, including shop applied primers and previously applied coatings, by applying specified coating to small, inconspicuous area.
   4. If coating lifts or blisters existing coating, apply barrier or tie coat as instructed by coating manufacturer.
   5. If no compatible barrier or tie coat exists, remove existing coating completely and apply coating system as specified for new work.

1.4 SUBMITTALS

A. Product Data:
   1. Submit product data including label analysis for each product proposed for use.
   2. Specifically include percent solids-by-volume, volatile organic compound (VOC) content lb/gal, and lead content (percent of weight of dried film).
   3. Schedule:
      a. List each material proposed for use. Cross-reference to specific coating system and substrate application.
      b. Identify each material by manufacturer's catalog number, product name, and generic classification.

DocuSign Envelope ID: 330DEBD6-9A9E-4F34-BDCC-1AC1BAA701E9

B. Coating System Samples:
   1. Prepare 1 sample of each coating system scheduled on actual substrate materials proposed for use.
   2. Provide sample for each top coat color scheduled.
   3. Step back each coat at least one inch to show bare substrate and each coat in system build-up.
   4. Minimum sample size of 4 by 8 inches.
   5. Label each sample to indicate materials, color, sheen, DFT of each coat applied, and total system DFT.

C. Submit following Informational Submittals:
   1. Test Reports: Indicate compliance with specified performance requirements.
   2. Certifications specified in Quality Assurance article.
   3. Qualification Data: Manufacturer's and applicator's qualification data.
   4. Manufacturer's Instructions: Include mixing, thinning, and curing requirements; application temperature ranges; and required surface preparation.
   5. Test reports for film thickness, adhesion and soluble salt.

D. Closeout Submittals:
   1. Warranty: Submit specified warranty.

1.5 QUALITY ASSURANCE

A. Single Source Responsibility: Provide products of single manufacturer for use in each coating system. Do not mix products of different manufacturers without approval of Architect and manufacturers involved.

B. Manufacturer Qualifications: Company specializing in manufacturing products specified in this Section with minimum 5 years documented experience.

C. Applicator Qualifications: Company specializing in application of coatings scheduled with 3 years documented experience; licensed or approved by coating manufacturer.

D. Regulatory Requirements: Comply with CPSC 16 CFR 1303 and other applicable federal, state, and local regulations limiting lead content of coatings to be applied.

E. Certifications: Submit certification from manufacturer that materials furnished for use on this Project meet or exceed specified requirements and comply with applicable federal, state, and local requirements regarding lead and VOC content.

1.6 DELIVERY, STORAGE, AND HANDLING

A. Deliver, store, and handle products in accordance manufacturer’s instructions.

B. Deliver products to site in manufacturer's sealed and labeled containers; inspect to verify compliance with specified requirements.

C. Label containers to indicate manufacturer's name, product name and type of coating, brand code or stock number, date of manufacture, coverage, surface preparation, drying time, cleanup, color designation, and instructions for mixing and reducing.

D. Store coating materials in tightly covered containers in well ventilated area at ambient temperatures of 45 degrees F minimum and 90 degrees F maximum, unless required otherwise by manufacturer. Maintain containers in clean condition, free of harmful materials and residue with labels in legible condition.

E. Take precautionary measures to prevent fire hazards and spontaneous combustion.

1.7 PROJECT CONDITIONS

A. Environmental Conditions: Comply with more restrictive conditions under which coatings may be applied; following requirements or manufacturer's requirements.
   1. Provide continuous ventilation during application of coatings to exhaust hazardous fumes.
   2. Provide heating necessary to maintain surface and ambient temperatures within specified limits.

DocuSign Envelope ID: 330DEBD6-9A9E-4F34-BDCC-1AC1BAA701E9

3. Maintain temperature and humidity conditions for minimum 24 hours before, during, and 48 hours after application of finishes.
4. Do not permit wide variations in ambient temperatures which might result in condensation on freshly coated surfaces.
5. Provide illumination of not less than 80 footcandles measured mid-height at substrate surface during application of coatings.
6. Apply coatings only when ambient and surface temperatures are between 55 degrees F and 90 degrees F.
7. Do not apply coatings under following conditions:
   a. When surfaces are damp and wet.
   b. During snow, rain, fog, and mist.
   c. When relative humidity is less than 20 percent or exceeds 85 percent.
   d. When temperature is less than 5 degrees F above dew point.
   e. When dust may be generated before coatings have dried.
   f. In direct sunlight.
   g. When wind velocity is above 20 mph.
8. Application of coatings may continue during inclement weather provided work areas and surfaces to be coated are enclosed and specified environmental conditions are maintained.

1.8 WARRANTY

A. Warrant against defects in material and workmanship for 5 years.

B. Repair or replace defects occurring during warranty period.

C. Defects include but are not limited to holidays, wrinkling, pinholes, crazing and cracking, loss of adhesion to substrate, deficient thickness, improper materials and workmanship.

PART 2 - PRODUCTS

2.1 MANUFACTURERS

A. Acceptable Manufacturers:
   1. Tnemec Company, Inc., Kansas City, MO.
   2. Carboline Comany, Saint Louis, MO.

2.2 COATING MATERIALS - GENERAL

A. Coatings:
   1. Furnish coatings with uniform, homogeneous mixture.
   2. Provide cured coating free of streaks and sags, and yielding specified finish.

B. Paint Maximum Product Emissions Limits: Top coat and primer interior paints must meet or not exceed the VOC (Volatile Organic Compounds) limits of the current requirements of Cal-GREEN Table 5.504.4.3 for VOC Content Limits for Architectural Coatings.

C. Cal-GREEN Requirements for typical high performance coatings:
   1. Primers, Sealers, and Undercoaters: 100 grams per liter of product minus water
   2. Industrial Maintenance Coatings: 250 grams per liter of product minus water
   3. Non-flats: 100 grams per liter of product minus water
   4. Non-flat High Gloss: 150 grams per liter of product minus water.

2.3 HIGH-PERFORMANCE COATINGS SCHEDULE

A. Coating System - Exterior Galvanized and Non-Ferrous Metals.
   1. Color and Sheen: Refer to color schedule.
   2. Prime Coat: P2 Epoxy, DFT 4 mil.
   3. Intermediate Coat: P2 Epoxy, DFT 4 mil.
   4. Top Coat: U1 Polyurethane, DFT 5 mil.
   5. Total DFT: 13 mil.

B. Coating System - Exterior Non-Galvanized Steel.
   1. Color and Sheen: Refer to color schedule.

DocuSign Envelope ID: 330DEBD6-9A9E-4F34-BDCC-1AC1BAA701E9

2. Prime Coat: P1 Zinc Rich Primer, DFT 3 mil.
3. Intermediate Coat: P2 Epoxy, DFT 4 mil.
4. Top Coat: U1 Polyurethane, DFT 5 mil.
5. Total DFT: 12 mil.

2.4 PRIMERS

A. Type P1 - Organic Zinc-Rich Primers:
   1. Manufacturers and Products:
      a. Tnemec Company, Inc.: 94H_2O Hydro-Zinc.
      b. Carboline Company, Carbozinc 859 VOC,
   2. Physical Requirements:
      a. Solids content by volume: 63 percent minimum.
      b. Metallic zinc content: 83 percent minimum.
      c. VOC Content (Unthinned): 96 g/L.
   3. Performance Requirements:
      a. General: Tests are based on one coat at manufacturer's recommended DFT.
      b. Adhesion: ASTM D4541, not less than 1500 psi pull, average of three trials.
      c. Salt Spray (Fog): ASTM B117, no blistering, cracking, softening, or delamination of film. No more than 1 percent rust on plane and no more than 1/4 inch rust creepage at scribe and no rusting at edges after 20,000 hours exposure.

B. Type P2 - Intermediate Coating:
   1. Manufacturers and Products:
      a. Tnemec Company, Inc.: Series L69 Epoxoline II.
      b. Carboline Company: Carboguard 890 EF.
   2. Physical Requirements:
      a. Solids Content by Volume: 67 percent minimum.
      b. VOC Content (Unthinned): 98 g/L.
   3. Performance requirements:
      a. General: Tests are based on one coat at manufacturer's recommended DFT.
      b. Adhesion: ASTM D4541, not less than 900 psi pull, average of five trials.
      c. Salt Spray (Fog): ASTM B117, no blistering, cracking, softening, or delamination of film. No more than 1/32 inch rust creepage at scribe after 1500 hours exposure.

2.5 POLYURETHANE COATINGS

A. Type U1 - High Build Acrylic Polyurethane Coatings:
   1. Locations: Exterior steel items and interior Feature Stair.
   2. Manufacturers and Products:
      a. Tnemec Company, Inc.: Series 750 UVX
      b. Carboline Company: Carbothane 134 VOC, gloss.
   3. Physical Requirements:
      a. Solids Content by Volume: 57 percent minimum.
      b. Sheen: Semi-gloss.
      c. VOC Content (Unthinned): 99 g/L.

2.6 ACCESSORY MATERIALS

A. Cleaners:
   1. General: Mildewcide, TSP (tri-sodium phosphate), acidic-detergent, zinc sulfate, sodium metasilicate, and solvents:
   2. Commercially available.
   3. Non-damaging to surface being cleaned
   4. Complying with PDCA Specification Manual.
   5. Acceptable to coating manufacturer.

B. Metal Conditioner: Proprietary phosphoric acid based, etching type solution; acceptable to coating manufacturer.

DocuSign Envelope ID: 330DEBD6-9A9E-4F34-BDCC-1AC1BAA701E9

C. Rust Inhibitor:
   1. Water containing 0.32 percent by weight of sodium nitrite and 1.28 percent by weight of secondary ammonium phosphate (dibasic).
   2. Water containing 0.2 percent by weight of chromic acid, sodium chromate, sodium dichromate, or potassium dichromate.

D. Spackling compound, putty, fillers, liquid de-glosser, patching plaster, thinners, and materials not indicated but required to achieve finishes. Compatible with coating system and acceptable to coating manufacturer.

E. Do not use products of different manufacturers in combination, unless approved by each manufacturer of products involved.

2.7 MIXING

A. Use factory prepared colors matching approved samples. Site tinting will not be permitted.

B. Thoroughly mix and stir coating components before use to ensure homogeneous dispersion of ingredients. Prior to application, blend multiple containers of same material and color by pouring from one container to another several times to ensure uniform consistency, color, and smoothness.

C. Mix in clean pails of material recommended by manufacturer to avoid contamination.

D. Mix only enough of multi-part coatings to allow application within pot life of mixture.

E. Remove film which may form on surface of material in containers and strain material before using. Stir frequently during use to maintain pigments in suspension. Do not stir film into material.

F. Apply coatings of consistency instructed by manufacturer.

G. Thinning:
   1. Provide thinners approved by coating manufacturer.
   2. Add thinners within manufacturer recommended limits.

2.8 COLORS AND SYSTEMS

A. Colors: Custom color coating as selected by Architect.

PART 3 - EXECUTION

3.1 EXAMINATION

A. Examine conditions and proceed with Work when substrates and environmental conditions are acceptable.

B. Measure moisture content of surfaces using recently calibrated electronic moisture meter. Do not apply coatings if moisture content of surfaces exceeds lesser of percentages listed below or those required by coating manufacturer. If excess moisture content exists and cannot be reduced, obtain written approval of coating manufacturer before application of coatings.
   1. Gypsum board and gypsum plaster: 17 percent.
   2. Masonry, Concrete, CMU, and Portland Cement Plaster: 17 percent for solvent reduced coatings. Test concrete floors in accordance with ASTM D4263.

C. Prior to applying alkali and acid sensitive coatings, test substrate pH. Substrate pH shall not exceed pH tolerance recommended by manufacture.

3.2 PREPARATION

A. Protect completed construction from damage. Furnish drop cloths, shields, and protective methods to prevent spray, splatter or droppings from disfiguring other surfaces.

B. Remove surface hardware, mechanical diffusers, escutcheons, registers, electrical plates, light fixture trim, fittings, fastenings and similar items prior to preparing surfaces for finishing. Provide surface-applied protective masking for non-removable items. Carefully store removed items for reinstallation.

C. Remove mildew by scrubbing with mildewcide. Rinse thoroughly with clean water.

DocuSign Envelope ID: 330DEBD6-9A9E-4F34-BDCC-1AC1BAA701E9

D. Before beginning application of coatings, ensure surfaces are clean, dry, and free of dirt, dust, rust, and rust scale, oil, grease, mold, mildew, algae, efflorescence, release agents and other harmful materials which could adversely affect coating adhesion and finished appearance.

3.3 SURFACE PREPARATION FOR NEW WORK

A. General:
1. Correct minor defects.
2. Remove temporary labels, wrappings, and protective coverings from surfaces to be coated.
3. Seal stains, marks, and other imperfections which may bleed through surface finishes.

B. Steel - Unprimed:
1. Remove weld spatter by chipping or grinding.
2. Clean interior and weather protected steel in accordance with SSPC SP7, "Brush-Off Blast Cleaning".
3. Clean exterior steel permanently exposed to elements in accordance with SSPC SP6 "Commercial Blast Cleaning".
4. Apply primer, or metal conditioner to bare surfaces in accordance with coating schedule, paying particular attention to abrasions, welds, bolts, and nuts. Allow to set as recommended by manufacturer.

C. Steel - Shop Prime Coated:
1. Remove loose shop primer and rust; sand to feather-edge at adjacent sound primer by cleaning in accordance with SSPC SP2 "Hand Tool Cleaning" and SP3 "Power Tool Cleaning".
2. Apply primer or metal conditioner to abrasions, welds, bolts, and nuts in accordance with coating schedule. Allow to set as instructed by manufacturer. Rinse with clean water with rust inhibitor mixed-in or applied primer or metal conditioner immediately following rinse. Allow to dry.
3. Prime coat bare areas immediately.
4. Apply specified primer to bare steel and previously primed steel surfaces scheduled to receive high performance coatings.

D. Galvanized Steel: Remove soluble and insoluble contaminants and corrosion. Sweep (Abrasive) Blasting per ASTM D6386 to achieve a uniform anchor profile (1.0 - 2.0 mils).

3.4 SURFACE PREPARATION OF PREVIOUSLY APPLIED COATED SURFACES

A. General:
1. Remove cracked and deteriorated sealants and calking.
2. Remove chalk deposits and loose, blistered, peeling, scaling, or crazed finish to bare base material or sound substrate by scraping and sanding.
3. Wash surfaces with solution of TSP to remove wax, oil, grease, and other harmful material; rinse, and allow to dry. Exercise caution so TSP solution does not soften existing coating.
4. Abrade glossy surfaces by sanding or wiping with liquid de-glosser.
5. Test compatibility of existing coatings by applying new coating to small, inconspicuous area in accordance with ASTM D3359. If new coatings lift or blister existing coatings, request recommendation from Architect.
6. Apply specified primer to surfaces scheduled to receive coatings.

B. Metal:
1. Remove rust from surfaces to bare metal in accordance with SSPC SP6 "Commercial Blast Cleaning".
2. Exercise care not to remove galvanizing.
3. Complete preparation as specified for new work.

3.5 APPLICATION

A. General:
1. Coat surfaces specified, scheduled, illustrated, and otherwise identified unless specifically noted otherwise.

DocuSign Envelope ID: 330DEBD6-9A9E-4F34-BDCC-1AC1BAA701E9

2. Apply coatings of type, color, and sheen as scheduled.
3. Apply products in accordance with manufacturer's instructions. Use application materials, equipment, and techniques as instructed by coating manufacturer and best suited for substrate and type of material being applied.
4. Do not apply finishes to surfaces that are improperly prepared.
5. Quantify of coats specified are minimum quantify acceptable.
6. Apply coating systems to achieve scheduled total dry film thickness.
7. Apply material at not less than manufacturer's instructed spreading rate.
8. Do not exceed maximum single coat thickness instructed by coating manufacturer.
9. Do not double-back with spray equipment building up film thickness of two coats in one pass.
10. Ensure that edges, corners, crevices, welds, and exposed fasteners, receive dry film thickness equivalent of flat surfaces.
11. Finish edges of coatings adjoining other materials and colors sharp and clean manner, without overlapping.

B. Prime Coats:
1. Apply initial coat to surfaces as soon as practical after preparation and before subsequent surface deterioration.
2. Apply primer to sash before glazing.

C. Intermediate and Top Coats:
1. Allow previously applied coat to dry before next coat is applied.
2. Sand and dust lightly between coats as recommended by coating manufacturer.
3. Apply each coat to achieve uniform finish, color, appearance, and coverage free of brush and roller marks, runs, misses, visible laps and shadows, hazing, bubbles, pin holes, and other defects.
4. If stains, undercoats, and other conditions show through final topcoat, correct defects and apply additional topcoats until coating film is of uniform finish, color, and appearance.

D. Mechanical and Electrical Items:
1. Refer to Division 25 - Mechanical and Division 26 - Electrical for schedule of color coding and identification banding of equipment, ductwork, piping, and conduit. Color code equipment, piping, conduit and exposed ductwork in accordance with requirements indicated.
2. Prior to finishing mechanical and electrical items; remove and finish separately louvers, grilles, covers, and access panels. Replace when dry.
3. Do not apply coatings over name plates, tags, and other equipment identification.

E. Replace trim, fittings, and other items removed for finishing.

3.6 FIELD QUALITY CONTROL

A. Test film thickness of each coat with wet film gage on each surface to ensure coatings are being applied to proper thickness.

B. Perform adhesion tape test for each substrate material in accordance with ASTM D3359.

C. Owner requires testing of painting for soluble salts. Coordinate requirements and test procedures with Owner.

D. Request review of each applied coat by Architect and manufacturer's representative before application of successive coats. Only reviewed coats will be considered in determining number of coats applied.

E. Immediately prior to Substantial Completion, perform detailed inspection of coated surfaces and repair or refinish abraded, stained, and otherwise disfigured surfaces.

F. Testing: Owner reserves right to employ independent testing agency to verify acceptability of substrates and conformance of coating materials to specified requirements; and to test coating quality and dry mil thickness.

DocuSign Envelope ID: 330DEBD6-9A9E-4F34-BDCC-1AC1BAA701E9

G. If test results show that material does not comply with specified requirements, remove noncomplying coatings, recoat with complying material, and pay costs of additional testing to ensure compliance.

3.7 CLEANING

A. Promptly remove spilled, splashed, and spattered coatings. Clean spots, oil, and other soiling from finished surfaces using cleaning agents and methods which will not damage materials.

B. If completed construction is damaged beyond normal cleaning and repair by coating operations, replace damaged items at no additional cost to Owner.

C. Maintain premises and storage areas free of unnecessary accumulation of tools, equipment, surplus materials, and debris.

D. Collect waste, cloths, and material which may constitute fire hazards and place in closed metal containers; remove from site daily along with empty containers.

3.8 PROTECTION

A. Protect work of other trades against damage from coating activities. Correct damage by cleaning, repairing, replacing, and recoating as acceptable to Architect.

B. Provide "Wet Paint" signs and other methods to protect newly coated surfaces. Remove when directed or when no longer needed.

END OF SECTION

DocuSign Envelope ID: 330DEBD6-9A9E-4F34-BDCC-1AC1BAA701E9

SECTION 99-099601

FIBER ENCAPSULATING COATING

PART 1 - GENERAL

1.1 SUMMARY

A. Section Includes: Interior and Exterior Coatings for encapsulating asbestos containing industrial fiber cement board (Transite).

1.2 DEFINITIONS

A. DFT: Dry film thickness.

1.3 SYSTEM REQUIREMENTS

A. Application Requirements: Apply scheduled coatings to exposed surfaces of items scheduled and otherwise indicated unless specifically noted otherwise.

B. Interface with Adjacent Systems: Upon request from other trades, furnish information on characteristics of materials proposed for use to ensure compatibility of top coatings.

1.4 SUBMITTALS

A. Product Data:
   1. Submit product data including label analysis for each product proposed for use.
   2. Specifically include percent solids-by-volume, volatile organic compound (VOC) content g/L, and lead content (percent of weight of dried film).
   3. Schedule:
      a. List each material proposed for use. Cross-reference to specific coating system and substrate application.
      b. Identify each material by manufacturer's catalog number, product name, and generic classification.

B. Coating System Samples:
   1. Prepare 1 sample of each coating system scheduled on actual substrate materials proposed for use.
   2. Provide sample with top coat scheduled in painting section.
   3. Step back each coat at least one inch to show bare substrate and each coat in system build-up.
   4. Minimum sample size of 24 by 36 inches on cement board substrate.
   5. Label each sample to indicate materials, color, sheen, DFT of each coat applied, and total system DFT.

C. Submit following Informational Submittals:
   1. Test Reports: Indicate compliance with specified performance requirements.
   2. Certifications specified in Quality Assurance article.
   3. Qualification Data: Manufacturer's and applicator's qualification data.
   4. Manufacturer's Instructions: Include mixing, thinning, and curing requirements; application temperature ranges; and required surface preparation.

1.5 QUALITY ASSURANCE

A. Single Source Responsibility: Provide products of single manufacturer for use in each coating system. Do not mix products of different manufacturers without approval of Architect and manufacturers involved.

B. Manufacturer Qualifications: Company specializing in manufacturing products specified in this Section with minimum 5 years documented experience.

C. Applicator Qualifications: Company specializing in application of coatings scheduled with 3 years documented experience; licensed or approved by coating manufacturer.

DocuSign Envelope ID: 330DEBD6-9A9E-4F34-BDCC-1AC1BAA701E9

D. Certifications: Submit certification from manufacturer that materials furnished for use on this Project meet or exceed specified requirements and comply with applicable federal, state, and local requirements regarding lead and VOC content.

1.6 PREINSTALLATION CONFERENCE

A. Conduct preinstallation conference.

B. Agenda: Discuss at minimum following Items:
   1. Existing substrates to be encapsulated.
   2. Preparation and precaution procedures including protection of adjacent work.
   3. Weather conditions under which work will be done.
   4. Access to elevated substrates.
   5. Application procedures.
   6. Conditions of installation, such as substrates, existing and surrounding conditions, and environmental conditions.
   7. Conditions detrimental to installation.
   8. Review submittals, installation procedures, and sequence.
   9. Cleaning up and waste disposal.

1.7 DELIVERY, STORAGE, AND HANDLING

A. Deliver, store, and handle products in accordance manufacturer’s instructions.

B. Deliver products to site in manufacturer's sealed and labeled containers; inspect to verify compliance with specified requirements.

C. Label containers to indicate manufacturer's name, product name and type of coating, brand code or stock number, date of manufacture, coverage, surface preparation, drying time, cleanup, color designation, and instructions for mixing and reducing.

D. Store coating materials in tightly covered containers in well ventilated area at ambient temperatures of 45 degrees F minimum and 90 degrees F maximum, unless required otherwise by manufacturer. Maintain containers in clean condition, free of harmful materials and residue with labels in legible condition.

E. Take precautionary measures to prevent fire hazards and spontaneous combustion.

1.8 PROJECT CONDITIONS

A. Environmental Conditions: Comply with more restrictive conditions under which coatings may be applied; following requirements or manufacturer's requirements.
   1. Provide continuous ventilation during application of coatings to exhaust hazardous fumes.
   2. Provide heating necessary to maintain surface and ambient temperatures within specified limits.
   3. Maintain temperature and humidity conditions for minimum 24 hours before, during, and 48 hours after application of finishes.
   4. Do not permit wide variations in ambient temperatures which might result in condensation on freshly coated surfaces.
   5. Provide illumination of not less than 80 footcandles measured mid-height at substrate surface during application of coatings.
   6. Apply coatings only when ambient and surface temperatures are between 55 degrees F and 90 degrees F.
   7. Do not apply coatings under following conditions:
      a. When surfaces are damp and wet.
      b. During rain, fog, and mist.
      c. When relative humidity is less than 20 percent or exceeds 85 percent.
      d. When temperature is less than 5 degrees F above dew point.
      e. When dust may be generated before coatings have dried.
      f. In direct sunlight.
      g. When wind velocity is above 20 mph.

DocuSign Envelope ID: 330DEBD6-9A9E-4F34-BDCC-1AC1BAA701E9

8. Application of coatings may continue during inclement weather provided work areas and surfaces to be coated are enclosed and specified environmental conditions are maintained.

PART 2 - PRODUCTS

2.1 COATING MATERIALS - GENERAL

A. Coatings:
   1. Furnish coatings with uniform, homogeneous mixture.
   2. Provide cured coating free of streaks and sags, and yielding specified finish.

B. Paint Maximum Product Emissions Limits: Top coat and primer interior paints must meet or not exceed the VOC (Volatile Organic Compounds) limits of the current requirements of Cal-GREEN Table 5.504.4.3 for VOC Content Limits for Architectural Coatings.

C. Cal-GREEN Requirements for typical high performance coatings:
   1. Primers, Sealers, and Undercoaters: 100 grams per liter of product minus water
   2. Industrial Maintenance Coatings: 250 grams per liter of product minus water

2.2 COATINGS

A. Material: Elastomeric thermoplastic water based copolymer, blended specifically to seal asbestos containing Industrial Fiber Cement Board (Transite®).
   1. Locations: Interior and exterior surfaces of Transite as indicated on Drawings.
   2. Manufacturers and Products:
      a. Fiberlock Technologies: TBC Encasement Coating for Exterior Transite; 6497 White.
   3. Physical Requirements:
      a. Solids Content by Weight ± 2%: 45.0%.
      b. Solids by Volume ± 2%: 45.0%
      c. Viscosity at 70°F: 95-120 Kreb Units
      d. Specular Gloss: 5.5º ± 1 @ 60º
      e. Flash Point: Non-combustible
      f. Shelf Life: 24 Months Min.
      g. Calculated VOC: 88 grams/liter
      h. Coverage on Transite: 50 – 100 sq. ft./gallon

2.3 ACCESSORY MATERIALS

A. Cleaners:
   1. Acceptable to coating manufacturer.
   2. Refer to Manufacturer's warnings about scraping asbestos containing material.

2.4 MIXING

A. Use factory prepared coatings. Site tinting will not be permitted.

B. Thoroughly mix and stir coating components before use to ensure homogeneous dispersion of ingredients. Prior to application, blend multiple containers of same material and color by pouring from one container to another several times to ensure uniform consistency, color, and smoothness.

C. Mix in clean pails of material recommended by manufacturer to avoid contamination.

D. Remove film which may form on surface of material in containers and strain material before using. Stir frequently during use to maintain pigments in suspension. Do not stir film into material.

E. Apply coatings of consistency instructed by manufacturer.

F. Thinning:
   1. Provide thinners approved by coating manufacturer.
   2. Add thinners within manufacturer recommended limits.

DocuSign Envelope ID: 330DEBD6-9A9E-4F34-BDCC-1AC1BAA701E9

PART 3 - EXECUTION

3.1 EXAMINATION

A. Examine conditions and proceed with Work when substrates and environmental conditions are acceptable.

B. Measure moisture content of surfaces using recently calibrated electronic moisture meter. Do not apply coatings if moisture content of surfaces exceeds lesser of percentages listed below or those required by coating manufacturer. If excess moisture content exists and cannot be reduced, obtain written approval of coating manufacturer before application of coatings.
   1. Transite: 17 percent.

3.2 PREPARATION

A. Protect completed construction from damage. Furnish drop cloths, shields, and protective methods to prevent spray, splatter or droppings from disfiguring other surfaces.

B. Remove surface hardware, mechanical diffusers, escutcheons, registers, electrical plates, light fixture trim, fittings, fastenings and similar items prior to preparing surfaces for finishing. Provide surface-applied protective masking for non-removable items. Carefully store removed items for reinstallation.

C. Prepare transite panels in strict compliance with EPA and manufacturer's instructions for asbestos containing materials.

D. Before beginning application of coatings, ensure surfaces are clean, dry, and free of dirt, dust, rust, and rust scale, oil, grease, mold, mildew, algae, efflorescence, release agents and other harmful materials which could adversely affect coating adhesion and finished appearance.

3.3 APPLICATION

A. General:
   1. Coat surfaces specified, scheduled, illustrated, and otherwise identified unless specifically noted otherwise.
   2. Apply products in accordance with manufacturer's instructions. Use application materials, equipment, and techniques as instructed by coating manufacturer and best suited for substrate and type of material being applied.
   3. Apply liberally and uniformly.
   4. Multiple coats may be necessary to achieve desired dry thickness. Allow coating to dry before applying additional coats.
   5. The necessary dry film thickness of a bridging encapsulant for asbestos containing materials (ACM) will vary from project to project as ACM can have a wide range of characteristics, including density, porosity, and surface profile.
   6. Follow EPA's Guidance for Controlling Asbestos-Containing Materials in Buildings (EPA 560 / 5-84024, June 1985):
      a. Primary instruction regarding dry film thickness states that when encapsulating ACM, the coating is to be applied "considerably thicker than recommended for painting.
      b. Coverage should be no more than 100 sq. ft. per gallon and should create a continuous, unbroken coating" (Section 5.1.3, page 5-8).
   7. Ensure that edges, corners, crevices, welds, and exposed fasteners, receive dry film thickness equivalent of flat surfaces.
   8. Finish edges of coatings adjoining other materials and colors sharp and clean manner, without overlapping.

3.4 FIELD QUALITY CONTROL

A. Periodically test film thickness of each coat with wet film gage to ensure coatings are being applied to proper thickness and entire surface is encapsulating the transite panels.

B. Testing: Owner reserves right to employ independent testing agency to verify acceptability of substrates and conformance of coating materials to specified requirements; and to test coating quality and dry mil thickness.

DocuSign Envelope ID: 330DEBD6-9A9E-4F34-BDCC-1AC1BAA701E9

3.5 CLEANING

A. Promptly remove spilled, splashed, and spattered coatings. Clean spots, oil, and other soiling from finished surfaces using cleaning agents and methods which will not damage materials.

B. If completed construction is damaged beyond normal cleaning and repair by coating operations, replace damaged items at no additional cost to Owner.

C. Maintain premises and storage areas free of unnecessary accumulation of tools, equipment, surplus materials, and debris.

D. Collect waste, cloths, and material which may constitute fire hazards and place in closed metal containers; remove from site daily along with empty containers.

3.6 PROTECTION

A. Protect work of other trades against damage from coating activities. Correct damage by cleaning, repairing, replacing, and recoating as acceptable to Architect.

B. Provide "Wet Paint" signs and other methods to protect newly coated surfaces. Remove when directed or when no longer needed.

END OF SECTION

DocuSign Envelope ID: 330DEBD6-9A9E-4F34-BDCC-1AC1BAA701E9

SECTION 99-099005

PAINTING – SEISMIC RETROFIT

PART 1 - GENERAL

1.1 SUMMARY

A. Scope: This work consists of preparing surfaces to receive coatings and applying coatings for the seismic retrofit portion of work.

B. The coatings specified in this section are in addition to any factory finishes, shop priming, or surface treatment described.

1.2 DEFINITIONS

Detergent Wash: Removal of dirt and water-soluble chemicals by scrubbing with a solution of detergent and water, and removal of all solution and residues with clean water.

Hand Cleaning: Removal of dirt, loose rust, mill scale, excess base material, filler, aluminum oxide, chalking paint, peeling paint, or paint that is not firmly bonded to the surfaces by using hand or powered wire brushes, hand scraping tools, power grinders, or sandpaper and removal of all loose particles and dust prior to coating.

Mildew Wash: Removal of mildew by scrubbing with a solution of detergent, hypochlorite-type household bleach, and warm water, and removal of all solution and residues with clean water.

Abrasive Blasting:

Removal of loosely adhering paint, dirt, rust, mill scale, efflorescence, weak concrete, or laitance, must be by the use of airborne abrasives. Loose particles, dust, and abrasives must be removed by blasting with clean, oil-free air.

Abrasives must be limited to mineral grit, steel grit, or steel shot, and must be graded to produce the surface profile recommended in the manufacturer's data sheet.

Steam Cleaning: Removal of oil, grease, dirt, or other foreign matter by using steam generated by commercial steam cleaning equipment, from a solution of water and steam cleaning compounds, and removal of all residues and cleaning compounds with clean water.

TSP Wash: Removal of oil, grease, dirt, paint gloss, and other foreign matter by scrubbing with a solution of trisodium phosphate and warm water, and removal of all solution and residues with clean water.

Water Blasting: Removal of dirt, loose scale, chalking, or peeling paint by low-pressure water cleaning. Water blasting must be performed under SSPC-SP12 and must produce a surface cleanliness meeting SSPC-SP12-WJ4. Equipment used must have a minimum flow rate of 1.5 gpm. If a detergent solution is used, it must be biodegradable and must be removed from all surfaces with clean water.

1.3 SUBMITTALS

A. Product Data:
   1. Manufacturer's descriptive data, a materials list, and color samples must be submitted.
   2. Product descriptive data must include product description, manufacturer's instructions for product mixing, thinning, tinting, handling, site environmental requirements, product application, and drying time.
   3. Materials list must include manufacturer's name, trade name, and product numbers for each type coating to be applied.

DocuSign Envelope ID: 330DEBD6-9A9E-4F34-BDCC-1AC1BAA701E9

B. Certificates of Compliance: Submit certificates of compliance for products required to comply with SSPC standards.

1.4 QUALITY CONTROL AND ASSURANCE

A. Regulatory Requirements: Coatings and applications must comply with the rules for control of VOC emissions adopted by the Air Quality Management District" (AQMD) in the air basin in which the coatings are applied.

1.5 SITE ENVIRONMENTAL REQUIREMENTS

A. Coatings must be applied under the environmental constraints specified in the manufacturer's instructions. These conditions must be maintained until the coating has cured and is ready for recoat.

B. Continuous ventilation must be provided during application of the coatings.

C. Adequate lighting must be provided while surfaces are being prepared for coatings and during coating applications.

PART 2 - PRODUCT

2.1 GENERAL

A. Products for each coating system must be from a single manufacturer and must comply with the Detailed Performance Standards of the Master Painters Institute (MPI). Each product must be shown on the MPI Approved Products List unless otherwise specified.

2.2 DELIVERY, STORAGE, AND HANDLING

A. Products must be delivered to the site in sealed, labeled containers and stored in a well-ventilated area at an ambient air temperature of at least 45 degrees F. Container labeling must include manufacturer's name, type of coating, trade name, color designation, drying time, and instructions for tinting, mixing, and thinning.

PART 3 - EXECUTION

3.1 INSPECTION

A. Coatings must not be applied until surface preparation has been authorized by the Engineer. Notify the Engineer at least 3 business days before application of coatings.

3.2 SURFACE PREPARATION

A. Prepare surfaces for coating under the coating manufacturer's instructions unless otherwise specified.

B. Steel and Other Ferrous Metals: Surface must be cleaned under SSPC-SP 1. Surface profile must be as required for the coating system specified.

C. Previously Coated Surfaces:

1. Dirt, oil, grease, or other surface contaminants must be removed by water blasting, steam cleaning, or TSP wash. Mildew must be removed by mildew wash. Abrasive blasting must not be used on non-ferrous metal surfaces.
2. Chipped, peeling, blistered, or loose coatings must be removed by hand cleaning, water blasting, or abrasive blasting. Bare areas must be pretreated and primed as specified for new work.

3.3 APPLICATION

A. Coatings must be applied under the manufacturer's instructions and at the application rates recommended by the manufacturer to achieve the dry film thickness stated in the coating technical data sheet.

B. Mixing, thinning and tinting must comply with the manufacturer's instructions. After thinning, the coating must comply with the regulatory requirements.

DocuSign Envelope ID: 330DEBD6-9A9E-4F34-BDCC-1AC1BAA701E9

C. Coatings must be applied only when surfaces are dry and properly prepared.

D. Cleaning and painting must be scheduled so that dust and other contaminants from the cleaning process do not fall on wet, newly coated surfaces.

E. Materials required to be coated must have coatings applied to all exposed surfaces.

F. Surface Finish Application:
   1. Each coat must be applied to a uniform finish. Finished surfaces must be free of surface deviations and imperfections such as skips, cloudiness, spotting, holidays, laps, brush marks, runs, sags, curtains, ropiness, improper cutting in, overspray, drips, ridges, waves, and variations in color and texture.
   2. Each application of a multiple application finish system must closely resemble the final color coat, except each application must provide enough contrast in shade to distinguish the separate applications.

G. Work Required Between Applications:
   1. Each application of material must be cured under the coating manufacturer's instructions before applying the next coating.

H. Timing of Applications: The first application of the coating system must be during the same work shift that the final surface preparation was performed. Additional coats must be applied as soon as the required drying time of the preceding coat, specified in the coating manufacturer's instructions, has been met.

I. Application Methods:
   1. Coatings must be applied by brush, roller or spray. Rollers must not leave a stippled texture in the paint film. Extension handles for rollers must not be greater than 6 feet in length.
   2. If spray methods are used, surface deviations and imperfections such as overspray, thickness deviations, lap marks, and orange peel must be considered as evidence the work is unsatisfactory and the Contractor must apply the remainder of the coating by brush or roller, as authorized by the Engineer.

3.4 CLEANING

A. Upon completion of all operations, the coated surfaces must be thoroughly cleaned of dust, dirt, grease, or other unsightly materials or substances.

B. Surfaces marred or damaged as a result of your operations must be repaired, to match the condition of the surfaces before the beginning of your operations.

3.5 PROTECTION

A. Provide protective devices, such as tarps, screens or covers, as necessary to prevent damage to the work and to other property or persons from all cleaning and painting operations.

B. Paint or paint stains on surfaces not designated to be painted must be removed at your expense and the original surface must be restored.

3.6 COATING SYSTEM

A. The surfaces to be coated must be as described. When a coating system is not described for a surface to be finish coated, use the coating system as specified below for the substrate material. The number of applications specified for each coating system specified is a minimum. Additional coats must be applied if necessary to obtain a uniform color, texture, appearance, or required dry film thickness.

3.5 STEEL AND OTHER FERROUS METALS, HIGHLY CORROSIVE ENVIRONMENT

A. 2 Prime Coats:Coating meeting the requirements of SSPC-Paint 29

END OF SECTION

DocuSign Envelope ID: 330DEBD6-9A9E-4F34-BDCC-1AC1BAA701E9

SECTION 99-101425

CODE SIGNAGE

PART 1 - GENERAL

1.1 SUMMARY

A. Section Includes: Code required signage.

1.2 SUBMITTALS

A. Product Data: Submit product data for each type of sign specified, including details of construction relative to materials, dimensions, profiles, and finishes.

B. Shop Drawings:
   1. Submit shop drawings covering fabrication, installation and finish of specified systems.
   2. Include following:
      a. Fully dimensioned plans and elevations with detail coordination keys.
      b. Locations of exposed fasteners and joints.
      c. Message list for each sign required, including large-scale details of wording and lettering layout.

1.3 QUALITY ASSURANCE

A. Single-Source Responsibility: For each separate sign type required, obtain signs from one source of a single manufacturer.

PART 2 - PRODUCTS

2.1 MANUFACTURERS

A. Acceptable Manufacturers
   1. 2/90 Sign Systems
   2. APCO Signs.
   3. ASI Sign Systems, Inc.
   4. Century Sign Builders.
   5. Vomar Products, Inc.

2.2 MATERIALS

A. Aluminum Extrusions: Extrusions of alloy and temper recommended by sign manufacturer for type of use and finish indicated, and with not less than strength and durability properties specified in ASTM B221 for 6063-T5.

B. Fasteners: Use concealed fasteners fabricated from metals that are not corrosive to sign material and mounting surface.

C. Colored Coatings for Acrylic Plastic Sheet: Colored coatings, including inks and paints for copy and background colors; recommended by acrylic manufacturers for optimum adherence to acrylic surface, and nonfading for application intended.

2.3 CODE SIGNAGE

A. General: Signage shall conform to CBC Sections as referenced below.

B. Braille: Use Contracted Grade 2 Braille whenever Braille symbols are specifically required. Dots shall be 1/10 inch on center within each cell with 2/10 inch space between cells. Dots shall be raised 1/40 inch above background. Refer to CBC Section 1117B.5.2.

C. Sign Schedule: Provide signage as required by codes and accessibility regulations and requirements. These include, but are not limited to:
   1. Illuminated Exit Signs: Refer to Division 26.
   2. Fire Doors (CBC Section 1008)
   3. Room Capacity (CBC Section 1004.3)

DocuSign Envelope ID: 330DEBD6-9A9E-4F34-BDCC-1AC1BAA701E9

4. Accessibility signs (ADA Accessibility 28 CFR 35 Requirements including Braille) including toilet facilities, doors to exitways. (CBC Sections 1011.3, 1117B.5, 1115B.6, and 1133B.4).
5. Room Signage: Provide as required by ADA accessibility requirements and code. Include Room Name and Room Number on each sign. Match campus standard.

D. Signage types: Refer to Drawing G001

2.4 FINISHES

A. Metal Finishes: Comply with NAAMM "Metal Finishes Manual" for finish designations and applications recommendations.

B. Aluminum Finishes:
1. Organic Coating: Thermosetting-modified acrylic enamel primer/topcoat system complying with AAMA 603.8 except with a minimum dry film thickness of 1.5 mils, medium gloss.
2. Color: Match Architect's sample.

PART 3 - EXECUTION

3.1 EXAMINATION

A. Examine conditions and proceed with work when substrates are acceptable.

B. Examine supporting members to ensure surfaces are at proper elevation and are free from dirt or other deleterious matter.

3.2 INSTALLATION

A. General:
1. Locate sign units and accessories where indicated, using concealed mounting methods in compliance with manufacturer's instructions.
2. Install signs and letters level, plumb, and at height indicated, with sign surfaces free from distortion or other defects in appearance.
3. Wall-Mounted Panel Signs: Attach panel signs to wall surfaces using double-sided tape or velcro.
4. Apply self-adhering pressure-sensitive letters in accordance with manufacturer’s directions.

3.3 CLEANING AND PROTECTION

A. After installation, clean soiled sign surfaces according to manufacturer's instructions. Protect units from damage until acceptance by Owner.

END OF SECTION

DocuSign Envelope ID: 330DEBD6-9A9E-4F34-BDCC-1AC1BAA701E9

SECTION 99-101453
TRAFFIC SIGNAGE

PART 1 – GENERAL

1.1 DESCRIPTION

A. This Section includes specifications for the Right-of-Way Signage and Roadway Signage, including Object Markers.

1.2 REFERENCE STANDARDS

A. ASTM International (ASTM):
   1. A167 Specification for Stainless and Heat-Resisting Chromium-Nickel Steel Plate, Sheet, and Strip
   2. B209 Specification for Aluminum and Aluminum-Alloy Sheet and Plate
   3. D635 Test Method for Rate of Burning and/or Extent and Time of Burning of Plastics in a Horizontal Position
   4. D3841 Specification for Glass-Fiber-Reinforced Polyester Plastic Panels
   5. D4956 Specifications for Retroreflective Sheeting

B. California Manual on Uniform Traffic Control Devices (Federal Highway Administration MUTCD 2009, as amended for use in California) (CMUTCD 2010)

C. State of California, Department of Transportation (Caltrans), Standard Specifications (2010):
   1. Section 56 Signs.
   2. Section 75 Miscellaneous Metals.
   3. Section 82 Markers and Delineators

D. State of California, Department of Transportation (Caltrans), Standard Plans (2010)

1.3 SYSTEM DESCRIPTION

A. Signage, unless otherwise noted, shall conform to Caltrans Standard Specifications, Section 56, Signs, and CMUTCD.

1.4 SUBMITTALS

A. Shop Drawings: Show sizes and thickness of all members, types of materials, methods of construction and assembly, complete sign and framing dimensions including span length and post heights, hangers, brackets, anchorage, relationship to surrounding work by other trades, shop finishes, sign designs, layouts, lettering (including letter spacing), and other pertinent details of fabrication and installation.

B. Manufacturer's Data: Submit sign manufacturer's descriptive data.

C. Samples: Submit samples of all materials under this Section, as follows:
   1. Samples of all colors proposed for use on all signs, at least 8 inches by 8 inches.
   2. Full-size paper proofs of all signs, marked with proposed colors.
   3. After approval of color match and lettering proofs, submit for approval one full size sign of each type, as selected by the Engineer, complete and ready for installation. Submit as many times as necessary until approval by the Engineer has been obtained. Sample sign, upon approval, shall serve as the standard to be equaled by all other work.

DocuSign Envelope ID: 330DEBD6-9A9E-4F34-BDCC-1AC1BAA701E9

4. Submit manufacturer's color palette for fiberglass sign panels and frames for color selection.

D. Certification of Compliance: Certify that aluminum posts for fiberglass sign panels will withstand 100 mile per hour wind loading. For signs, certify that aluminum posts for aluminum sign panels will withstand 60 mile per hour wind loading.

1.5 QUALITY ASSURANCE

A. Installation work under this Section shall be performed by experienced sign erectors.

1.6 DELIVERY, STORAGE, AND HANDLING

A. Ship sign panels in such a manner as to ensure their arrival on the job site in an undamaged condition.

B. Deliver and store material in a manner to prevent cracking, chipping or stress of the components, and to prevent mechanical damage or weather damage.

1.7 WARRANTY

A. Provide a 5 year warranty against material defects.

PART 2 – PRODUCTS

2.1 SIGN PANELS

A. Signs shall conform to the provisions in Section 56, Signs, of the Caltrans Standard Specifications and Plans, details shown on the Plans, and these technical provisions.

B. Roadside sign panels (salvaged) that are damaged by the Contractor shall be replaced at the Contractor's expense. New roadside signs shall consist of reflective sheeting on an aluminum substrate. The reflective sheeting shall conform to the provisions of AASHTO M268 and FHA FP-85 Type II-A and consisting of spherical lens elements adhered to a synthetic resin and enclosed by a flexible, transparent, weatherproof plastic having a smooth outer surface as manufactured by 3M, Seibulite, or Engineer-approved equal. The backing medium shall be synthetic sheet resin or other suitable non-cellulosic material.

C. Substrate: Sheet aluminum, alloys 6061-T6 or 5052-H38 in accordance with ASTM B209. Thickness: Minimum 1/16 inch. The front and back surfaces of the aluminum base metal shall be cleaned, deoxidized, and coated with a light, tightly adherent chromated conversion coating free of any powdery residue. The base metal pretreatment process shall be in conformance with ASTM B449, Section 5, Recommended Processing Methods. The coating weight shall be calms 2, with a median of 0.1025 oz/ft^2 as the optimum coating weight.

2.2 NON-ILLUMINATED SIGN PANELS

A. Aluminum Sign Panels:

1. Unless otherwise noted, fabricate sign panels from flat sheet aluminum sheeting conforming to ASTM B209, Alloy 6061-T6, not less than 1/8 inch thick.
2. The sign background shall be reflective sheeting conforming to Federal Specification L-S-300A. The reflective sheeting shall include a pre-coated pressure sensitive adhesive or a tack-free heat activated adhesive either of which shall be applied as specified by the sheeting manufacturer to commended, properly prepared flat surfaces without the necessity of additional adhesive coats on the reflective sheeting or application surface.

3. Application of all lettering, arrows, and other artwork shall be by photographic silk screen. No modification of typefaces or layout rules and the arrow/circle will be permitted without approval by the Engineer.
4. Sign Reflectivity – All signs must comply with the following standards
   a. The sign face shall have white 3M high intensity prismatic legend (or equal) reflective sheeting (ASTM Type III, IV, X) applied as a background.
   b. Lettering/graphics shall be one of the following:
      1) 3M Scotchlite Electrocut (letter cutting) or equal transparent cuttable film (1170 series) inverse cut to allow white reflective background to show through lettering.
      2) Screen printed using 3M 8801 series color translucent ink.
      3) Both processes (a or b) will accomplish a color field with white copy.
      4) The sign shall include a 3M series 1160 graffiti guard.
5. Street Name Signs on Signal Mast Arms or any aerially mounted signs.
   a. All sign hardware shall be aluminum and any moving parts shall be stainless steel.
   b. The sign mounting brackets shall be Sky Bracket with Sign Kit SB-SBK (or Equal).
   c. Various streets in the City change names at major intersections. Mast Arm Signs that designate different names shall be made with a 30 inch vertical blank by variable with suffix. The name of the roads to the right mounted shown as the street name on top. All legend shall be upper case 8” and lower case 6”.
   d. The sign mounting brackets shall be Sky Bracket with Sign Kit SB-SBK (or Equal).
   e. Various streets in the City change names at major intersections. Mast Arm
   f. Signs that designate different names shall be made with a 30 inch vertical blank by variable with suffix.
   g. The name of the roads to the right mounted shown as the street name on top.
   h. All legends shall be upper case 8” and lower case 6”.
6. Corner Street Name signs shall be mounted on top of stop signs when appropriate; otherwise they can be mounted separately.
   a. The U Channel bracket with minimum 12” blade shall be used and mounted on a new or existing square post. At least two holes shall be used to affix the bracket to the post and sign to bracket. A 5/16” x ¾” bolt shall be used to affix the bracket to the pole. There shall be at least two threaded holes for the set screws to affix the sign to the blade. These set screws shall be a 12 point 5/16-18 x ½” as distributed by Simi Fasteners (or Equal). For clarification and guidance, contact traffic operations.
   b. The corresponding U channel bracket at the intersection shall be mounted with a one piece double bladed positioned perpendicular to each other. Each blade shall include two 5/16-18 threaded hole, spaced at 6inch centers, to accept a 5/16-18x1/2” 12 point faster as distributed by Simi Fasteners (or Equal). The top street name sign shall not show any holes.

B. Fiberglass Reinforced Plastic Sign Panels:
1. Products: One of the following products and in compliance with the requirements specified herein: Fiber-Brite; Sequentia, "Polyplate"; Inteplast Group "InteCel" (0.5 inch for Post-Mounted CZ Signs, 48 inches or less), or equal.
2. Furnish fiberglass reinforced plastic panel sign in accordance with ASTM D3841. Panel: Acrylic modified and ultraviolet stabilized for outdoor weatherability. Plastic shall contain

additives designed to suppress fire ignition and flame propagation. When tested in accordance with the requirements in the ASTM D635, the extent of burning shall not exceed one (1) inch.

3. Plastic shall be stabilized to prevent the release solvents and monomers. The front and back surfaces of the laminate shall be clean and free of constituents and releasing agents that can interfere with the bonding of retroreflective sheeting.
4. Panel shall be weather resistant Grade II thermoset polyester laminate.
5. Color of fiberglass reinforced plastic panels shall be uniform gray.
6. Panels shall be minimum 0.135-inch thick.
7. Tolerances: Finished fiberglass reinforced plastic panel signs shall be flat within a tolerance of ±1/32 inch per linear foot when measured across the plane of the sign in all directions. The finished signs shall have an overall tolerance within ±1/8 inch of the specified dimensions.
8. Fabrication: Cut fiberglass reinforced plastic panels from a single piece of laminate. Pre-drill all bolt holes. Fabricate true and smooth predrilled bolt holes, panel edges, and the front and back surfaces of the panels. The panel surfaces shall be free of visible cracks, pinholes, foreign inclusions, warping and wrinkles that can affect performance and serviceability.

2.3 TYPEFACE

A. Unless otherwise noted, typefaces shall be Helvetica medium with industry standard normal letter spacing.

B. Street Name Signs (Corner) – Shall have a 9” vertical dimension, length will vary based upon the street name; minimum 24” length to maximum 48” length in 6” increments. The legend shall be white Series “C” with minimum ½” spacing. If the street name sign exceeds the 48” maximum length, Series B lettering maybe used. Street name lettering shall be 6” upper case and 4-1/2” lower case and street suffix lettering shall be 3” uppercase. In cases where the length of the street name is too long for a 48” sign plate, lettering may be narrowed to fit with prior City approval. There shall be a ½” white border.

C. Place type and symbols as shown on the Contract Drawings. Bring any design conflict in the manufacture and fabrication of the signage to the attention of the Engineer before proceeding.

D. Platform signs as indicated in the architectural signage plan.

2.4 SIGN FRAMES

A. Fabricate required steel framing, sign back bracing and support posts in accordance with Caltrans Standard Specifications, Section 75, Miscellaneous Metal.

B. Hot-dip galvanize steel framing, mounting components, hardware and appurtenances after fabrication and touch up as specified in Caltrans Standard Specifications, Section 75, Miscellaneous Metal.

C. Frames for fiberglass sign panels: Extruded aluminum tubing conforming to the manufacturer's requirements for each sign type. Finish shall be satin anodized in color selected by the Engineer.

2.5 FASTENINGS AND ANCHORS

A. Unless otherwise noted, design a complete system of fastenings and anchorage devices for the various signs, as required for attachment to the various supporting structures.

B. Straps and Saddle Brackets: Stainless steel conforming to the requirements of ASTM A167, Type 302 or 304, for mounting sign panels on electroliers, sign structure posts, and where shown on the Contract Drawings.

C. Theft and vandal proof bolts: Stainless steel with a chromium content of at least 16 percent and a nickel content of at least 8 percent.

D. Lag Screws, Bolts (Except Theft-Proof Bolts), Metal Washers and Nuts: Commercial quality steel, hot dip galvanized after fabrication in accordance with Caltrans Standard Specifications, Section 75, Miscellaneous Metal. Fiber washers shall be of commercial quality.

E. Fastenings and anchors for fiberglass sign panels shall conform to the sign panel manufacturer's requirements for each sign type.

2.6 SIGN COLORS

A. Standard paint colors as manufactured by Dupont, or equal, and as follows:

Color	Imron{spray}	Dulux{brush}
Red	68209UM	93-58209H
Yellow	6808U	93-6808
White	617U	93-21667
Black	69	93-005

B. For fiberglass sign panels, as selected from manufacturer's color palette.

2.7 POSTS

A. Metal Posts: Metal posts shall be in accordance with Caltrans Standard Specifications, Section 56-2.02A, Metal Posts, with the following additional requirements:

1. Hot dip galvanize steel posts, mounting components, hardware and appurtenances after fabrication and touch up as specified in Caltrans Standard Specifications Section 75 - 1.05, Galvanizing.
2. A break away system using Western Highway Ulti Mate with soil stabilizer shall be used as appropriate or equal.

B. Wood Posts: Wood posts shall be in accordance with Caltrans Standard Specifications, Section 56-2.02B, Wood Posts, with the following additional requirements:

1. Posts shall be 4 x 4 inches nominal size unless otherwise indicated on the Contract Drawings.
2. Preservative treat posts other than all heart redwood. Kiln dry prior to treatment

C. Aluminum Posts for Fiberglass Sign Panels: Extruded aluminum tubing conforming to the manufacturer's requirements for each sign type. Finish shall be satin anodized. Design posts to withstand 100 mile per hour wind loading.

D. Object Marker: Type K-1, conforming to the details shown on Caltrans Standard Plan A73A.

PART 3 – EXECUTION

3.1 SIGN INSTALLATION

A. Roadside signs shall be installed as specified in Section 56-2, Roadside Signs, of the Caltrans Standard Specifications, and these technical provisions, and as indicated on the Plans.

B. Install signs true, plumb, and level, where shown on the Contract Drawings. Do no field cutting of any sign work. Prevent bending and chipping signs. Exercise extreme care in all handling and stacking of signs to avoid bending or chipping. Replace chipped and bent sign panels. Exact locations of signs will be confirmed by the Engineer in the field.

C. Rigidly anchor work to the supporting construction, as shown on the approved shop drawings. Conceal fastenings, except those which anchor supporting members to structure. Fabricate and erect supporting members and securely attach to the various structures in accordance with

DocuSign Envelope ID: 330DEBD6-9A9E-4F34-BDCC-1AC1BAA701E9

Caltrans Standard Specifications, Section 75, Miscellaneous Metal.

D. Subsequent to erection, if required by the Engineer, exterior signs may be required to be covered until their actual use is required. Material used to temporarily cover any sign panel shall effectively conceal the message and be non-injurious to the panel, its finish, and its structural integrity.

3.2 POST INSTALLATION

A. Install posts in accordance with Caltrans Standard Specifications, Section 56-2.03, Construction, with the following additional requirements:

1. The remaining space around the post in the post holes shall be backfilled with concrete.
2. Dispose of surplus excavated material as specified in Section 99-310000, Earthwork.
3. Repair any spalling, chipping or cracking of concrete structures. Obtain the Engineer's approval of repair method.
4. Unless otherwise noted, do not paint wood posts and blocks.
5. Touch-up galvanized metal as specified Caltrans Standard Specifications Section 75 - 1.05, Galvanizing.
6. The line between the center of the top of a post and the center of a post at the ground line shall be plumb within a tolerance not to exceed 0.02-foot in 10 feet.

3.3 REMOVING, RELOCATING, REINSTALLING AND SALVAGING EXISTING SIGNS

A. Remove, relocate, and salvage existing signs in accordance with Section 99-024100, Site Demolition, as augmented herein.

B. Remove and re-install existing signs in new locations as shown on the Contract Drawings. Provide all necessary components required for erecting the existing sign in its new location, including support framing, hardware, post, post holes and concrete. Obtain Engineer's inspection for defects and approval of signs to be relocated prior to re-installation.

C. Where existing Milepost signs at one-tenth mile intervals need to be removed to facilitate the Contractor's construction operations, remove and reinstall, or remove and replace with new signs. Relocate Milepost signs to a new location if the existing location changes due to new track alignment.

D. Salvaging of signs shall include removing, disassembling, preparing, marking, bundling, packaging, tagging, hauling and stockpiling. Signs to be salvaged shall not be removed until their use is no longer required as determined by the Engineer. Salvaged materials shall be cleaned of all foreign materials and pressed flat before delivery to the Engineer.

E. Existing posts, which support signs that are to be salvaged, shall become the property of the Contractor and shall be disposed of outside the work site.

F. Protection and cleanup requirements for the new signs shall apply to the existing signs once that have been reinstalled.

3.4 PROTECTION AND CLEANING

A. Protect and maintain completed sign panels in good condition, free from dirt, scratches, hand marks or other blemishes.

B. Clean surfaces of sign work as recommended by the sign manufacturer after installation and keep in a condition satisfactory to the Engineer.

C. Remove and replace defective work, including that exhibiting cracked, chipped, scratched, abraded, or otherwise damaged finishes, with work conforming to the specified requirements.

DocuSign Envelope ID: 330DEBD6-9A9E-4F34-BDCC-1AC1BAA701E9

3.5 DISSIMILAR MATERIALS

A. Separate aluminum surfaces in contact with or in close proximity to non- compatible metals or concrete with non-absorptive tape, coat of heavy-bodied bituminous paint, or zinc chromate primer.

END OF SECTION

DocuSign Envelope ID: 330DEBD6-9A9E-4F34-BDCC-1AC1BAA701E9

SECTION 99-104400

FIRE PROTECTION SPECIALITES

PART 1 - GENERAL

1.1 DEFINITIONS

A. Where indicated on Drawings, abbreviation "FEC" defines fire extinguisher and cabinet and abbreviation "FE" is for fire extinguisher without cabinet.

1.2 SUBMITTALS

A. Product Data:
   1. Furnish manufacturer's descriptive literature.
   2. Include physical dimensions, operational features, color and finish, anchorage details, material descriptions, and type of hardware.

B. Shop Drawings: Include rough-in measurements, locations, and details for cabinets.

C. Samples: Submit sample of manufacturer's standard finish and color on actual base metal.

D. Submit following Informational Submittals:
   1. Certificates: Submit certification attesting compliance with UL and NFPA requirements.
   2. Manufacturer's instructions: Submit installation instructions for fire extinguisher cabinets.

1.3 QUALITY ASSURANCE

A. Single Source Responsibility: Obtain products in this Section from one manufacturer.

B. Certifications:
   1. Provide extinguishers which are UL listed and bear UL rating for type and classification.
   2. Conform to NFPA-10 requirements for extinguishers.

1.4 DELIVERY, STORAGE, AND HANDLING

A. Deliver, store, and handle products in accordance manufacturer’s instructions.

1.5 PROJECT CONDITIONS

A. Environmental Requirements: Do not store products subject to freeze damage in environments where damage could occur.

PART 2 - PRODUCTS

2.1 MANUFACTURERS

A. Acceptable Manufacturers:
   1. J. L. Industries, Bloomington, MN.
   2. Larsen's Manufacturing Company, Minneapolis, MN.
   3. Potter Roemer, Cerritos, CA.

2.2 FIRE EXTINGUISHERS

A. Multi-Purpose Dry Chemical Type (Siliconized Mono Ammonium Phosphate) with Pressure Gage.
   1. Capacity: 10.0 pounds.
   2. UL Rating: 4A-60B:C.
   3. Acceptable Product: MP10, Larsen's Manufacturing Company, Minneapolis, MN.

2.3 CABINETS

A. Fire Extinguisher Cabinet:
   1. Formed sheet metal 20 gage prime painted steel, epoxy finished interior.
   2. Recessed type.
   3. Cabinet Construction: Nonrated, except provide rated cabinet when recessed into rated partitions of same rating as partition.

DocuSign Envelope ID: 330DEBD6-9A9E-4F34-BDCC-1AC1BAA701E9

4. Size to accommodate specified fire extinguisher and accessories.

B. Trim: Flat, Prime painted steel.

C. Door:
1. Material: Prime painted galvanized steel.
2. Thickness: 20 gage minimum, reinforced for flatness and rigidity.
3. Latch: Roller latch.
4. Door style: Vertical view panel.

D. Glass: 1/8 inch thick tempered glass.

E. Mounting Hardware: Appropriate to cabinet.

F. Graphic Identification: Lettering complying with authorities having jurisdiction for letter style, size, spacing, and location. Locate as indicated by Architect. Individual press-on letters.

2.4 ACCESSORIES

A. Fire Extinguisher Brackets: Larsen's Manufacturing Company, Minneapolis, MN "B" series full length wall brackets, size as required for cylinder used.

2.5 FABRICATION

A. Form body of cabinet with tight inside corners and seams.

B. Predrill holes for anchorage.

C. Form perimeter trim and door stiles by welding, filling, and grinding smooth.

D. Hinge doors for 180 degree opening with continuous piano hinge. Provide nylon roller type catch.

E. Glaze doors with resilient channel gasket glazing.

2.6 FINISHES

A. Extinguisher: Red enamel.

B. Cabinet Trim and Door: Prime painted for field finishing under Section 99-099000.

C. Cabinet Interior: White epoxy.

PART 3 - EXECUTION

3.1 EXAMINATION

A. Examine conditions and proceed with work when substrates are ready.

B. Verify rough openings for cabinets are correctly sized and located.

3.2 INSTALLATION

A. Install in accordance with manufacturer's printed instructions.

B. Install cabinets plumb and level in wall openings, 48 inches from finish floor to door handle of cabinets at locations indicated on Drawings.

C. Securely attach cabinets and mounting brackets in place to wall blocking.

3.3 IDENTIFICATION

A. Identify fire extinguisher locations with following methods:
1. For fire extinguisher locations without cabinets, use vertical decal spelling "FIRE EXTINGUISHER" applied to adjacent wall surface.
2. For fire extinguisher cabinet locations, use individual press-on letters, in vertical format, of contrasting color to cabinet, spelling FIRE EXTINGUISHER.

END OF SECTION

DocuSign Envelope ID: 330DEBD6-9A9E-4F34-BDCC-1AC1BAA701E9

SECTION 99-210501

FIRE PROTECTION GENERAL PROVISIONS

PART 1 - GENERAL

1.1 DESCRIPTION

A. The General and Supplementary Conditions and Parts 1 through 7 of the Special Previsions are a part of the requirements for the work under this Division of the Specification.

1.2 WORK INCLUDED

A. Provide labor and materials required to install, test and place into operation the fire protection systems as called for in the Contract Documents and according to applicable codes and regulations.

B. Provide labor, materials and accessories required to provide complete operating fire protection systems as described or which may be reasonably implied as essential for a complete operating system.

1.3 QUALITY ASSURANCE

A. Comply with current governing codes, ordinances and regulations of the Authority or Authorities Having Jurisdiction over any part of the work and secure all necessary permits. Comply with the regulations and requirements of the Owner's insurance underwriter.

B. Where codes or standards are referenced, the applicable portions apply.

C. Drawings, specifications, codes and standards are minimum requirements. Where requirements differ, apply the more stringent.

D. Should any change in drawings or specifications be required to comply with governing regulations, notify the Architect prior to submitting bid.

E. Execute work in strict accordance with the best practices of the trades in a thorough, substantial, skillful and well-executed manner by competent workers. Provide a competent, experienced full-time Superintendent who is authorized to make decisions on behalf of the Contractor.

F. The Architect or Architect's Representative may conduct unannounced field reviews of any work completed or in progress during the Contractor's working hours. A report will be issued to the Contractor if the field review of the fire protection systems construction has revealed elements of the work, which are inconsistent with the Contract Documents. All items in the report shall be addressed in writing by the Contractor within two (2) weeks and corrections in the field shall be made as directed.

1.4 ABBREVIATIONS AND DEFINITIONS

A. Abbreviations:
   1. ANSI American National Standards Institute
   2. ASME American Society of Mechanical Engineers
   3. ASTM American Society for Testing and Materials
   4. AWWA American Water Works Association
   5. IEEE Institute of Electrical and Electronic Engineers
   6. NEMA National Electrical Manufacturers Association
   7. NFPA National Fire Protection Association
   8. UL Underwriters Laboratories Inc.

B. Definitions:
   1. Where it is stated in the specifications to submit to Architect or Engineer for review, refer to Architectural General and Special Conditions for proper procedures.
   2. "PROVIDE" means to "Furnish" and "Install".
   3. "INSTALL" means to join, unite, fasten, link, attach, set up or otherwise connect together before testing and turning over to Owner, complete and ready for regular operation.

DocuSign Envelope ID: 330DEBD6-9A9E-4F34-BDCC-1AC1BAA701E9

4. “FURNISH” means to supply all materials, labor, equipment, testing apparatus, controls, tests, accessories and all other items customarily required for the proper and complete application.
5. “AS DIRECTED” means as directed by the Architect, or the Architect’s Representative.
6. “CONCEALED” means embedded in masonry or other construction, installed behind wall furring or within double partitions, or installed within hung ceilings.
7. “SUBMIT” means submit to the Architect for review.

1.5 GUARANTEE

A. Submit a single guarantee stating that the work is in accordance with Contract Documents. Guarantee work against faulty and improper material, fabrication, installation, start-up and commissioning for a period of one (1) year from date of final acceptance by the Owner, except that where guarantees or warranties for longer terms are specified herein, the longer term shall apply. Correct any deficiencies, which occur during the guarantee period, within 24 hours of notification, at no additional cost to the Owner, to the satisfaction of the Owner. Obtain similar guarantees from subcontractors, manufacturers, suppliers and sub-trade specialists.

1.6 USE OF THE ARCHITECT’S AND ENGINEER’S DRAWINGS

A. The Contractor shall obtain, at the Contractor’s request, from the Architect or Engineer a set of AutoCAD or compatible format architectural and engineering drawings on electronic media where desired by the Contractor and/or required by the Specifications for use in preparing the shop drawings, coordination drawings, and record drawings. The Contractor shall provide to the Architect and Engineer a written release of liability acceptable to the Architect and Engineer prior to receiving the electronic media files.

PART 2 - PRODUCTS

2.1 EQUIPMENT AND MATERIALS

A. Provide products and materials that are new, clean, free of defects and free of damage and corrosion.

B. Products and materials shall not contain asbestos, PCBs or any other material that is considered hazardous by the Environmental Protection Agency or any other Authority Having Jurisdiction.

C. Replace materials of less than specified quality and relocate work incorrectly installed as directed by the Architect.

D. Provide name/data plates on major components of equipment with manufacturer’s name, model number, serial number, capacity data and electrical characteristics attached in a conspicuous place.

E. Install materials and equipment with qualified trades people.

F. Maintain uniformity of manufacture for equipment used in similar applications and sizes.

G. Applicable equipment and materials to be listed by Underwriters Laboratories and manufactured in accordance with ASME, AWWA, or ANSI standards, and as approved by Authorities Having Jurisdiction. The energy-using products shall be certified for use in the State of California and meet State energy efficient standards.

H. Fully lubricate equipment when installed.

I. Install floor-mounted equipment on a 4-inch high concrete pad. Concrete work shall be provided by another trade. Coordinate size and location with actual equipment used and accepted layout shop drawings.

J. Secure equipment with bolts, washers and locknuts of ample size to support equipment. Embedded anchor bolts to have bottom plate and pipe sleeves. Grout machinery set in concrete under entire bearing surface. After grout has set, remove wedges, shims and jack bolts and fill space with grout.

K. Locate valves, dielectric unions, access doors, etc., to be easily accessible, either in mechanical spaces or through access panels specified. Obtain Architect’s approval of access panel locations.

DocuSign Envelope ID: 330DEBD6-9A9E-4F34-BDCC-1AC1BAA701E9

L. Follow manufacturers' recommendations and instructions for installing, connecting, and adjusting equipment. Provide a copy of such instructions at the equipment during installation.

M. Equipment capabilities, etc., are scheduled or specified for job site operating conditions. Equipment sensitive to altitude shall be derated with the method of derating identified on shop drawings.

2.2 ALTERNATIVE EQUIPMENT AND MATERIALS

A. Contract Documents are based on materials specified and on equipment manufacturers indicated. Acceptance of alternative equipment manufacturers does not relieve Contractor of the responsibility to provide equipment and materials, which meet the quality and performance as stated or implied in the Contract Documents.

B. Equipment manufacturers listed in individual sections are acceptable for this project, subject to requirements of Contract Documents.

C. Submit proposals to supply alternate materials or equipment, in writing, with sufficient lead time for review prior to the date equipment must be ordered to maintain project schedule. Reimburse Owner for costs associated with the review of the proposed alternative whether alternative is accepted or rejected.

D. Include revisions required to adapt alternatives in such proposals, including revisions by other trades. No increase in the contract price will be considered to accommodate the use of alternative equipment.

E. Wherever quality standards (such as serviceability, longevity or durability) and operating results (such as noise levels, quantity delivered or pressure obtained) are specified or scheduled, or when the manufacturer and size of equipment, for which such operating results are published or determinable, is specified, the substitution being proposed must conform substantially to the quality and quantities specified or implied. The substitution must fit into available space conditions and must function properly in coordination with the rest of the system.

F. Proposed changes and substitutions of systems, equipment and manufacturers shall be submitted and include the following information with the proposal:
   1. A description of the difference between the existing contract requirements and that proposed, the comparative features of each, and the effect of the change on the end result performance. Include the impact of all changes on other contractors and acknowledge the inclusion of additional costs to other trades.
   2. Schematic drawings and details to supplement the description.
   3. A list of the contract requirements that must be revised if the change is accepted, including any specification revisions.
   4. Complete list of materials and equipment proposed for use in the change.
   5. Include a description and estimate of costs the Owner may incur in implementing the change, such as additional space requirements, permits, architectural and aesthetic impact, design costs, tests, permits evaluation, operating and support costs.
   6. A projection of any effects the proposed change would have on collateral costs to the Owner.
   7. A statement of the time by which a contract modification accepting the change must be issued, noting any effect on the contract completion time or the delivery schedule.
   8. A statement indicating the reduction to the contract price if the Owner accepts the change. Be responsible for appropriate modifications to all trades.

PART 3 - EXECUTION

3.1 FEES

A. Pay all required fees and obtain required permits related to the fire protection installation.

B. Pay royalties or fees in connection with the use of patented devices and systems.

C. Provide controlled or witnessed inspection where required by Authorities Having Jurisdiction or by these specifications.

DocuSign Envelope ID: 330DEBD6-9A9E-4F34-BDCC-1AC1BAA701E9

3.2 SUBMITTALS AND REVIEWS

A. Submit shop drawings, manufacturer's data, samples and test reports as specified.

B. Within two (2) months after notice to proceed by the Owner or Owner's Representative, or after execution of Owner/Contractor Agreement, submit a complete typed list of all fire protection equipment manufacturers and material suppliers for the equipment proposed to be provided on this project as well as names of all subcontractors.

C. Within three (3) months after notice to proceed by the Owner or Owner's Representative or after execution of Owner/Contractor Agreement, prepare an index of all submittals for the project. Include a submittal identification number, a cross-reference to the specification sections or drawing number, and an item description. Prefix the submittal identification number by the specification sections to which they apply. Indicate, on each submittal, the submittal identification number in addition to the other data specified. All subcontractors shall utilize the assigned submittal identification number.

D. After the Contract is awarded, obtain complete shop drawings, product data and samples from the manufacturers, suppliers, vendors, and all subcontractors, for all materials and equipment as specified. Submit data and details of such materials and equipment for review. Prior to submission, certify that the shop drawings, product data and samples are in compliance with the Contract Documents. Check all materials and equipment upon their arrival on the job site and verify their compliance with the Contract Documents. Modify any work, which proceeds prior to receiving accepted shop drawings as required to comply with the Contract Documents and the shop drawings.

E. Review of submittals is for general compliance with the design concept and Contract Documents. Comments or absence of comments does not relieve the Contractor from compliance with the Contract Documents. The Contractor remains solely responsible for details and accuracy, for confirming and correlating all quantities and dimensions, for selecting fabrication processes, for techniques of construction, for performing the work in a safe manner, and for coordinating the work with that of other trades.

F. No part of the work shall be ordered, procured, started in the shop or in the field until the shop drawings and samples for that portion of the work have been submitted, reviewed and returned with either "No Exceptions Noted" or "Exceptions Noted" marked on the submission.

G. A minimum period of ten (10) working days, exclusive of transmittal time, will be required in the Architect/Engineer's office each time a shop drawing, product data and/or samples are submitted for review. This time period must be considered by the Contractor in the scheduling of the work.

H. Submit two (2) bond prints of all items requiring shop drawings. Submit three (3) copies of manufacturer's product submittals organized by specification section number. Submittals not organized by specification will be returned without review. One (1) bond print or two (2) copies of submittals will be returned. Additional copies are the responsibility of the Contractor. Electronic media will not be reviewed.

I. Submissions will be stamped as follows:

Stamp	Interpretation
No Exceptions Noted	Fabrication, manufacture, or construction may proceed providing submittal complies with the Contract Documents.
Exceptions Noted: [ ] Resubmit for Record [ ] No Resubmission Required	Fabrication, manufacture, or construction may proceed providing submittal complies with the Contract Documents and Engineer's notations are complied with. Within this category are two options. A resubmission for our records is required when corrections are necessary. A resubmission is not required if there are only minor comments.

DocuSign Envelope ID: 330DEBD6-9A9E-4F34-BDCC-1AC1BAA701E9

Stamp	Interpretation
Revise and Resubmit	The submittal does not comply with the Contract Documents; do not proceed with fabrication, manufacture, or construction. The work and shop drawings are not permitted at the job site. Resubmit appropriate shop drawings.

J. Submit materials and equipment by manufacturer, trade name and model number. Include clear, legible copies of applicable brochure or catalog material. Maintenance and operating manuals are not suitable substitutes for shop drawings.

K. Identify each sheet of printed submittal pages (using arrows, underlining or circling) to show applicable sizes, types, model numbers, ratings, capacities and options actually being proposed. Cross out non-applicable information. Note specified features such as voltages, motor efficiencies, special tank linings, pump seals, materials or paint finishes. Cross out all references to “options”. Cross out statements such as “subject to change without notice” or “not for construction”. Anything not specifically excluded is assumed to be included.

L. Include dimensional data for roughing in and installation, technical data sufficient to verify that equipment meets requirements of the Contract Documents. Include wiring, piping and service connection data, motor sizes complete with voltage ratings, and schedules.

M. Maintain a complete set of the most current reviewed and stamped shop drawings and product data on site.

N. Prepare and submit detailed shop drawings for piping work and other distribution services in minimum ¼-inch to 1-foot scale, including elevations and locations and sizes of openings in floor decks, walls and roofs.

O. The work described in shop drawing and product data submittals shall be carefully checked by all trades for clearances (including those required for code compliance, maintenance and servicing), field conditions, maintenance of architectural conditions and proper coordination with other trades on the job. Each submitted shop drawing to include a certification that related field conditions and requirements have been checked by all Contractors and Subcontractors and that conflicts do not exist.

P. The Contractor is not relieved of the responsibility for dimensions or errors that may be contained on submissions or for deviations from requirements in the Contract Documents. The noting of some errors but overlooking others does not grant the Contractor permission to proceed in error. Regardless of any information contained in the shop drawings, product data and samples, the Contract Documents govern the work and are neither waived nor superseded in any way by the review of shop drawings, product data and samples.

Q. Inadequate or incomplete shop drawings, product data and/or samples will not be reviewed and will be returned to the Contractor for resubmittal.

R. Indicate the following in the lower right hand corner of each shop drawing, and on the front cover of each product data brochure: the submittal identification number; title of the sheet or brochure; name and location of the Project; names of the Architect, Engineer, Contractor, Subcontractor, Manufacturer, Supplier, and Vendor; the date of submittal; and the date of each correction, version and revision. Number all pages and drawings in product data brochures, test reports or submittals consecutively from beginning to end. Unless the above information is included, the submittal will be returned for resubmission. Resubmittals of shop drawings or product data or brochures shall include a cover letter summarizing the corrections made in response to the review comments.

3.3 COORDINATION OF WORK

A. The Contract Documents establish scope, materials and quality but are not detailed installation instructions. Drawings are diagrammatic.

B. The Contract Documents show the general arrangement of equipment, ductwork, piping and accessories. Follow these drawings as closely as the actual construction and the work of other

DocuSign Envelope ID: 330DEBD6-9A9E-4F34-BDCC-1AC1BAA701E9

trades will permit. Provide offsets, fittings, and accessories, which may be required but not shown on the Drawings. Investigate the site and review drawings of other trades to determine conditions affecting the work and provide such work and accessories as may be required to accommodate such conditions.

C. Certain products will be provided by other trades. Examine the Contract Documents to ascertain the requirements for installation of these products.

D. Carefully check space requirements with other trades to insure that material can be installed in the spaces allotted.

E. Wherever work interconnects with work of other trades, coordinate with other trades to insure that they have the information necessary so that they may properly install the necessary connections and equipment. Identify items (valves, etc.) requiring access in order that the ceiling and partition contractors can install access doors and panels in the correct locations.

F. Consult with other trades regarding equipment so that, wherever possible, motors, motor controls, pumps and valves are of the same manufacturer.

G. Furnish and set sleeves for passage of pipes and conduits through structural masonry and concrete walls, roofs and floors and elsewhere as will be required for the proper protection of each pipe passing through building surfaces.

H. Install firestopping around all pipes, conduits, etc., which pass through rated walls, partitions and floors in strict accordance with the manufacturer's published approval listing and rating.

I. Provide detailed information on openings and holes required in structural elements and pre-cast panels or components for fire protection work.

J. Provide required structural or architectural supports and hangers for piping and equipment, designed so as not to exceed allowable loadings of structures.

K. Examine and compare the Contract Drawings and Specifications with the drawings and specifications of other trades, report any discrepancies between them to the Architect and obtain written instructions for changes necessary in the work. Install and coordinate the work in cooperation with other related trades. Before installation, make proper provisions to avoid interferences.

L. Wherever the work is of sufficient complexity, prepare additional detail drawings to scale to coordinate the work with the work of other trades. Detailed work shall be clearly identified on the Drawings as to the area to which it applies. Submit these drawings to the Architect for review. At completion include a set of these drawings with each set of record drawings.

M. Before commencing work, examine adjoining work on which this work is in any way dependent and report conditions that prevent performance of the work. Become thoroughly familiar with actual existing conditions to which connections must be made or which must be changed or altered.

N. Adjust location of pipes, panels, equipment, etc., to accommodate the work to prevent interferences, both anticipated and encountered. Determine the exact route and location of each pipe prior to fabrication.
   1. Right-of-Way: Lines which pitch have right-of-way over those which do not pitch. For example, condensate, and plumbing drains normally have right-of-way. Lines whose elevations cannot be changed have right-of-way over lines whose elevations can be changed.
   2. Provide offsets and changes in direction of pipes as required to maintain proper head room and pitch on sloping lines. Provide traps, air vents, drains, etc., as required to effect these offsets and changes in direction.

O. Install fire protection work to permit removal (without damage to other parts) of controls, sheaves and drives, and any other parts requiring periodic replacement or maintenance. Arrange pipes and equipment to permit access to valves, starters, motors, and control components, and to clear the openings of swinging doors and access panels.

P. In cases of doubt as to the work intended, or in the event of need for explanation thereof, request supplementary instructions from the Architect.

DocuSign Envelope ID: 330DEBD6-9A9E-4F34-BDCC-1AC1BAA701E9

3.4 CONTRACTOR'S COORDINATION DRAWINGS

A. The Contractor shall coordinate efforts of all trades and shall furnish (in writing, with copies to the Architect) any information necessary to permit the work of all trades to be installed satisfactorily and with the least possible interference or delay.

B. The Contractor and all trade contractors shall prepare a complete set of construction Coordination Drawings indicating the equipment actually purchased and the exact routing for all lines such as piping, busway, conduit, ductwork, etc., including conduit embedded in concrete floors and walls. The Coordination Drawings shall be submitted complete to the Architect and the Engineer within three (3) months after notice to proceed is given and in compliance with the construction schedule for the project. The sheet metal drawings, at a scale of not less than ¼-inch to 1-foot, shall serve as the base drawings to which all other Contractors shall add their work. Each separate Trade Contractor shall draw their work on separate layers with different color assignments to facilitate coordination. Each Coordination Drawing shall be completed and signed off by the other Trade Contractors and the Contractor prior to the installation of the HVAC, plumbing, electrical, fire protection and fire sprinkler work in the area covered by the specific drawing. The Contractor's work shall be installed according to the shop drawings and Coordination Drawings. If the Contractor allows one trade to install their work before coordination with the work of other trades, the Contractor shall make all necessary changes to correct the condition at no additional cost to the Owner.

C. The Contractor's Coordination Drawings shall indicate structural loads at support points for all piping 10-inch and larger, racked piping, racked conduit and busway. Submit to Structural Engineer for review and approval. The elevation, location, support points, static, dynamic and expansion forces and loads imposed on the structure at support and anchor points shall be indicated. All beam penetrations and slab penetrations shall be indicated and sized and shall be coordinated. Work routed underground or embedded in concrete shall be indicated by dimension to column and building lines and shall be coordinated. Coordination Drawings shall document all required structural penetrations for initial construction. Penetrations shall be dimensioned for walls, floors and roofs. These structural coordination requirements require review and approval by the Structural Engineer prior to completion and submittal of the Drawings.

D. This requirement for Coordination Drawings shall not be construed as authorization for the Contractor or trade contractors to make any unauthorized changes to the Contract Documents. Contract document space allocations shall be maintained such as ceiling height, designated clearance for future construction and flexibility, chase walls, equipment room size, unless prior written authorization is received from the Architect to change them.

E. Prior to final acceptance of the work, the Contractor shall submit the Coordination Drawings as part of the Record Drawing submittal.

3.5 EXAMINATION OF SITE

A. The Contract Documents do not make representations regarding the character or extent of the subsoils, water levels, existing structural, mechanical and electrical installations, above or below ground, or other sub-surface conditions which may be encountered during the work.

B. Evaluate existing conditions that may affect methods or cost of performing the work, based on examination of the site or other information. Failure to examine the Drawings or other information does not relieve the Contractor of responsibility for satisfactory completion of the work.

3.6 EXCAVATION AND BACKFILL

A. Provide excavation for the work of this Division. Excavate all material encountered, to the depths indicated on the Drawings or as required. Remove excavated materials not required or suitable for backfill from the site. Provide grading as may be necessary to prevent surface water from flowing into trenches or other excavations. Remove any water that accumulates. Provide sheeting and shoring as may be necessary for the protection of the work and for the safety of personnel.

DocuSign Envelope ID: 330DEBD6-9A9E-4F34-BDCC-1AC1BAA701E9

B. Provide trenches of widths necessary for the proper execution of the work. Grade bottom of the trenches accurately to provide uniform bearing and support the work on undisturbed soil at every point along its entire length. Except where rock is encountered, do not excavate below the depths indicated. Where rock excavations are required, excavate rock to a minimum overdepth of four inches below the trench depths indicated on the Drawings or as required. Backfill overdepths in the rock excavation and unauthorized overdepths with loose, granular, moist earth, thoroughly machine tamped to a compaction level of at least 95 percent of standard proctor density or 75 percent relative density or as specified by the Architect. Whenever unstable soil that is incapable of properly supporting the work is encountered in the bottom of the trench, remove soil to a depth required and backfill the trench to the proper grade with coarse sand, fine gravel or other suitable material.

C. Excavate trenches for utilities that will provide the required minimum depths of cover from existing grade or from indicated finished grade, whichever is lower, unless otherwise specifically shown.

D. Trenches shall not be placed within ten (10) feet of foundation or soil surfaces that must resist horizontal forces.

E. Do not backfill trenches until all required tests have been performed and the installation observed by the Architect. Comply with the requirements of other sections of the specifications. Backfill shall consist of non-expansive material with limited porosity. Deposit backfill in 6-inch thick layers and tamp carefully until the fire protection work is covered by not less than 12 inches of material. Backfill and tamp remainder of trench at 1-foot intervals until complete. Uniformly grade the finished surface.

3.7 CUTTING AND PATCHING

A. Where cutting, channeling, or drilling of floors, walls, partitions, ceilings or other surfaces is necessary for the proper installation, support or anchorage of piping or equipment, lay out the work carefully in advance. Repair any damage to the building, piping, equipment or finishes using skilled tradesmen for all required work.

B. Do not cut, channel or drill unfinished masonry, tile, etc. unless written permission is obtained from the Architect. Perform this work in a manner acceptable to the Architect.

C. Where piping or equipment are mounted on a painted finished surface, or a surface to be painted, paint to match the surface. Cold galvanize bare metal whenever support channels are cut.

D. Provide slots, chases, openings and recesses through floors, walls, ceilings and roofs as required. Where these openings are not provided, provide cutting and patching to accommodate penetrations at no additional cost to the Owner.

3.8 PROHIBITED LABELS AND IDENTIFICATIONS

A. Prohibited Markings: In all public areas, tenant areas, storage areas and similar locations within the project, the inclusion or installation of any equipment, fixture or assembly which bears on any exposed surface any name, trademark, or other insignia which is intended to identify the manufacturer, the vendor, or other source(s) from which such object has been obtained, is prohibited.

B. Exception: Required Underwriters Laboratories labels shall not be removed nor shall identification specifically required under the various technical sections of the Specifications be removed.

3.9 EQUIPMENT PAD AND ANCHOR BOLTS

A. Provide concrete pads under all floor-mounted fire protection equipment. This includes electrical components, equipment mounted on legs and pipe support stands. Equipment pads shall conform to the shape of the piece of equipment it serves with a minimum 2-inch margin around the equipment and supports. Pads shall be a minimum of 4 inches high and made of a minimum 28-day, 2,500-psi concrete reinforced with 6-inch by 6-inch 6/6-gauge welded wire mesh. Trowel tops and sides of pad to smooth finishes, equal to those of the floors, with all external corners bullnosed to a ¾-inch radius. Use shop drawings stamped “NO EXCEPTIONS NOTED” or “EXCEPTIONS NOTED” for dimensional guidance in sizing pads.

DocuSign Envelope ID: 330DEBD6-9A9E-4F34-BDCC-1AC1BAA701E9

B. Provide galvanized anchor bolts for all equipment placed on concrete equipment pads, inertia blocks, or on concrete slabs. Verify bolts size, number and embed depth recommended by the manufacturer of the equipment with seismic calculations as specified, and locate by means of suitable templates.

C. Where equipment is mounted on gypsum board partitions, the mounting screws will pass through the gypsum board and be securely attached to the partition studs. As an alternative, the mounting screws may pass through the gypsum board and be securely attached to 6-inch square, 18-gauge galvanized metal backplates that are attached to the gypsum board with an approved non-flammable adhesive. Toggle bolts installed in gypsum board partitions are not acceptable.

3.10 DELIVERY, DRAYAGE AND HAULING

A. Include all drayage, hauling, hoisting, shoring and placement in the building of equipment specified and be responsible for the timely delivery and introduction of equipment to the project as required by the construction schedule. If any item of equipment is received prior to the time it is required, be responsible for its proper storage and protection until the time it is required. Pay for all costs of demurrage or storage.

B. If equipment is not delivered or installed at the project site in a timely manner as required by the project construction schedule, the Contractor shall be responsible for disassembly, re-assembly, manufacturer's supervision, shoring, general construction modification, delays, overtime costs, etc., at no additional cost to the Owner.

3.11 EQUIPMENT AND MATERIAL PROTECTION

A. Protect the work, equipment and material of other trades from damage by work or workers of this trade, and correct damage caused without additional cost to the Owner.

B. The Contractor shall be responsible for all work, materials and equipment until finally inspected, tested and accepted. Protect work against theft, injury or damage; and carefully store material and equipment received on site that is not immediately installed. Close open ends of work with temporary covers or plugs during construction to prevent entry of dust, dirt, water or other obstructing material. Cover and protect equipment and materials from damage due to water, moisture, humidity, paint, spray-on fireproofing, construction debris, etc. Store equipment subject to moisture damage, such as insulation or electrical components in dry heated spaces.

C. Provide adequate means for fully protecting finished parts of the materials and equipment against damage from whatever cause during the progress of the work until final acceptance. Protect materials and equipment in storage and during construction in such a manner that no finished surfaces will be damaged or marred, and moving parts are kept clean and dry. Do not install damaged items; take immediate steps to obtain replacement or repair. Replace all wet or damp insulation.

3.12 ELECTRICAL EQUIPMENT AND ELECTRICAL ROOM PRECAUTIONS

A. Do not install piping or equipment above switchboards, disconnects, panelboards, dimmers, control panels, VFDs, motor control centers, individual motor controllers, electronics, etc or the code-required service space for these electrical devices.

3.13 DATE OF COMPLETION AND TESTING OF FIRE PROTECTION SYSTEMS

A. Comply with the project construction schedule for the date of final performance and acceptance testing, and complete work sufficiently in advance of the Contract completion date to permit the execution of the testing prior to occupancy and the Contract closeout. Complete any adjustments and/or alterations that the final acceptance tests indicate as necessary for the proper functioning of all equipment prior to the completion date. See individual sections for extent of testing required.

B. Provide a detailed schedule of completion indicating when each system is to be completed and outlining when tests will be performed. Submit completion schedule for review within three (3) months after the notice to proceed by Owner or Owner's Representative has been given. Update this schedule periodically as the project progresses.

DocuSign Envelope ID: 330DEBD6-9A9E-4F34-BDCC-1AC1BAA701E9

3.14 OPERATING INSTRUCTIONS AND OPERATOR TRAINING

A. Provide the services of factory-trained specialists to supervise the operation of all equipment and systems specified and train the Owner's operating and maintenance personnel for a three (3) day operating/instruction period. Operating instruction time is defined as straight time working hours and not including nights, weekends or travel time to and from the project. Refer to individual sections for additional training and instruction by manufacturer's trained specialists.

B. Notify the Owner in writing at least three (3) weeks before the operating/instruction period begins. Do not commence until the Owner has issued written acceptance of the starting time and schedule.

C. In addition to the operating/instruction period, organize and conduct a seminar to instruct the Owner's Representatives in the operation and general preventative maintenance of equipment and systems provided at the completion of the project.

D. Instruct Owner's operating personnel in proper starting sequences, operation, shut-down, and maintenance procedures, including normal and emergency procedures.

E. Make arrangements to give instructions by system and not by building areas.

F. Provide services of qualified personnel, including each sub-trade, each major equipment supplier to attend seminar and instruct on respective equipment or systems. Seminar shall be conducted by the Contractor and may be videotaped and attended by the Architect or Architect's Representative.

G. Submit seminar agenda, schedule and list of representatives to the Owner for review thirty (30) days prior to seminar. Confirm attendance at seminar by written notification to participants.

H. At seminar, submit final copies of record drawings and operating and maintenance manuals to Owner.

I. Submit a written record of the seminar, complete with an attendance list to the Owner.

3.15 OPERATING AND MAINTENANCE MANUALS

A. Provide operating instructions and maintenance manuals for all equipment and materials furnished under this Division.

B. Submit three (3) final copies of operating and maintenance data books for review at least ten (10) weeks before the completion date. Provide 8.5-inch by 11-inch, expanding spine catalog binders bound with heavy red fabric; hot stamp lettering on front and spine identifying project name and Owner's name. Assemble data in a completely indexed volume or volumes and identify the size, model, and features indicated for each item.

C. Index the maintenance manual according to the following system:
   1. Tab – 1.0 Fire Protection Systems: Title page identifying project, Owner, Contractor and Engineer with clear plastic protection cover.
   2. Tab – 1.1 List of Fire Protection Drawings.
   3. Tab – 1.2 Description of Systems: Provide complete descriptions of the operating sequence for each system. Include detailed system description, with individual components described, and description of how components interface with others and to the complete system.
   4. Tab – 1.3 Operating Division: Provide information on locations of components, how to energize switches and controls, how components interface with other components, operation of controls including operational sequence, complete troubleshooting sequence, and failure and safeguards to indicate if equipment goes off-line.
   5. Tab – 1.4 Maintenance and Lubrication Division: Provide general maintenance and lubrication schedule for major components and include daily, weekly, monthly, quarterly, semiannual and yearly checks and tasks. Explain how to execute maintenance tasks required for typical equipment such as bearings, drives and motors. Compile this information for equipment separate from shop drawings.
   6. Tab – 1.5 List of Equipment Suppliers and Contractors: Provide list of equipment suppliers and contractors, including street addresses, website addresses, fax and toll-free telephone numbers.

DocuSign Envelope ID: 330DEBD6-9A9E-4F34-BDCC-1AC1BAA701E9

7. Tab – Certification (2.0, 2.1, etc.): Include copy of test data on hydrostatic tests performed on piping systems, equipment alignment certifications, copy of pipe color code and inspection approval certificates from State Fire Marshal.
8. Tab – Shop Drawings and Maintenance Bulletins (3.0, 3.1, 3.2, etc.): Provide material received in compliance with clause "Submittals and Reviews".

D. The manual divider and tabs shall be laminated mylar plastic and colored as follows:

Fire Protection Systems	1.0	–	1.5	Orange
Certification	2.0	–	2.4	Green
Shop Drawings & Maintenance	3.0	–	3.17	Yellow

E. Plastic tabs with typewritten card insertions will not be accepted.

F. Maintenance information shall include complete lubrication, cleaning, and servicing data compiled in clearly and easily understandable format. Show model and serial number of each piece of equipment, complete lists of replacement parts, capacity ratings, and actual loads.

G. Provide the following equipment maintenance information where applicable:
1. Identifying name and number
2. Locations (where several similar items are used, provide a list)
3. Complete nameplate data
4. Parts list
5. Performance curves and data
6. Wiring diagrams
7. Lubrication charts
8. Manufacturers' recommended operating and maintenance instructions, with all non-applicable information deleted
9. List of spare parts recommended for normal service requirements
10. Assembly and disassembly instructions with exploded view Drawings, where necessary
11. Trouble shooting diagnostic instructions, where applicable

3.16 RECORD DRAWINGS

A. The Contractor shall maintain on a daily basis at the project site a complete set of Record Drawings. The Record Drawings shall initially consist of a set of blueline prints or AutoCAD files of the Contractor's Coordination Drawings. The prints shall be marked or the AutoCAD files electronically updated to show the precise location of all buried or concealed work and equipment, including embedded piping and valves, and all changes and deviations in the fire protection work from that shown on the Contract Documents. This requirement shall not be construed as authorization for the Contractor to make changes in the layout or work without definite written instructions from the Architect or Engineer. The updated Coordination Drawings shall be used to produce the final Record Drawings that shall be delivered to the Owner on electronic media upon project completion.

B. Record dimensions clearly and accurately to delineate the work as installed. Suitably identify locations of all equipment by at least two (2) dimensions to permanent structures.

C. The Contractor and subcontractor shall mark all in-progress Record Drawings on the front lower right hand corner with a rubber stamp impression or an AutoCAD image similar to the following:

RECORD DRAWING
(⅜-inch high letters)

To be used for recording Field Deviations
and Dimensional Data Only
($^5/_{16}$-inch high letters)

D. Upon completion of the work, the Contractor and subcontractors shall certify all Record Drawings on the front lower right hand corner adjacent to the above marking with a rubber stamp impression or an AutoCAD image similar to the following:

DocuSign Envelope ID: 330DEBD6-9A9E-4F34-BDCC-1AC1BAA701E9

RECORD DRAWING
CERTIFIED CORRECT
(⅜-inch high letters)

(Printed Name of General Contractor)
($^5/_{16}$-inch high letters)

Date:

(Printed Name of Subcontractor)
($^5/_{16}$-inch high letters)

Date:

E. Prior to final acceptance of the work of this Division, the Contractor shall submit properly certified Record Drawings to the Architect and Engineer for review and shall make changes, corrections, or additions as the Architect and/or Engineer may require to the Record Drawings. After the Architect's and Engineer's review, and any required Contractor revisions, the Record Drawings shall be delivered to the Owner on electronic media. The Architect and Engineer do not assume any responsibility for the accuracy or completeness of the Record Drawings.

3.17 CERTIFICATION

A. Any certifications required by the Specifications, in addition to those required for shop drawings, product data, equipment and other items, are to be so certified in writing by the Owner, a Partner, or a Corporate Officer of the firm required to provide the Certification, or by another person duly authorized to sign binding agreements for and on behalf of the Owner, Partner or Corporation.

3.18 FINAL REVIEW

A. At a time designated by the Owner, the entire system shall be reviewed for compliance with the Contract Drawings and Specifications. Be available at all times during this review.

B. Demonstrate to the Owner and/or the Architect's personnel prior to the Final Review that systems and equipment have been properly balanced and adjusted and are in compliance with the requirements of the Contract Documents. After these demonstration tests are satisfactorily completed, but prior to the Final Review, submit a written certification that: 1) attests to the Contract Document compliance for this project; and 2) certifies that the equipment and materials installed in this project contain no lead, asbestos or PCB. Prior to the final review, the Contractor shall confirm the following items regarding the status of key elements of the work. Negative responses to any of the items indicate that the construction is not substantially complete, and the building is not ready for a final review. The Contractor shall confirm the following in writing:
   1. Building fire protection systems are completely installed, commissioned, operating, and connected to the city, public or private utilities and pressure tested.
   2. Building has normal electrical power.
   3. The emergency or stand-by power system has been started up, commissioned, and is standing by.
   4. Building systems have been cleaned.
   5. Seismic restraints have been inspected as specified. Any required special inspections have been completed.
   6. Building fire and life safety systems have been tested and accepted by the local authorities. Any required special inspections have been completed.
   7. All final wiring connections have been rechecked.
   8. All base building lighting systems are completely installed and operating.
   9. There are no deviations or non-compliance with the Contract Documents; otherwise, provide a detailed account of any and all deviations or non-compliance.

DocuSign Envelope ID: 330DEBD6-9A9E-4F34-BDCC-1AC1BAA701E9

10. All items on field review reports have been responded to in writing and are resolved to the satisfaction of the Owner.
11. All outstanding items on submittals and shop drawings have been addressed in writing and are resolved to the satisfaction of the Owner.
12. Schedule the final review only after providing written confirmation of all items above. Provide a minimum of ten (10) days notice.

C. Certificates and Documents required by the Contract shall be presented to the Architect at least two (2) weeks prior to the Final Review.

D. After the Final Review, any changes or corrections noted as necessary for the work to comply with the Contract Documents shall be accomplished without delay in order to secure final acceptance of the work.

END OF SECTION

DocuSign Envelope ID: 330DEBD6-9A9E-4F34-BDCC-1AC1BAA701E9

SECTION 99-210548

VIBRATION ISOLATION AND SEISMIC RESTRAINTS FOR FIRE SUPPRESSION

PART 1 - GENERAL

1.1 WORK INCLUDED

A. The work of this Section shall include, but is not limited to, the following:
   1. Seismic restraints for Fire Protection equipment and piping
   2. Supervision and inspection of installed seismic restraints, anchorage and associated hardware

1.2 RELATED DOCUMENTS

A. Section 99-210501 – Fire Protection General Provisions

B. Section 99-211319 – Fire Protection Systems

1.3 REFERENCE STANDARDS

Published specifications standards, tests or recommended methods of trade, industry or governmental organizations apply to work in this Section where cited below:

A. ASCE – American Society of Civil Engineers
   1. ASCE 7-05, 2006 Revised 2007 – Minimum Design Loads for Buildings and Other Structures

B. 2013 CBC – California Building Code: Title 24 Building Standards

C. NFPA – National Fire Protection Association
   1. NFPA 13, Edition 2013 – Standard for the Installation of Sprinkler Systems, with California amendments
   2. NFPA 13HB, Edition 2013 – Automatic Sprinkler Systems Handbook, with California amendments
   3. CEC, Edition 2011 – California Electrical Code

1.4 QUALITY ASSURANCE

A. Comply with Reference Standards.

1.5 SUBMITTALS

A. Shop Drawings: Concrete reinforcing details and templates for all foundations, bases, supports, hanger bolts, etc.; support frame details, pipe support details; equipment weight, center of gravity and operating speed, location and installation details. Include in the submittal drawing the following information based on equipment submittals released for construction:
   1. Seismic restraint calculations stamped by a California State licensed structural or civil engineer, confirming compliance with ASCE 7-05.
   2. Note compliance with seismic code regulations and the project specification on the submittals.
   3. Number and location of seismic restraints and anchors for each piece of equipment including but not limited to vertical pipe risers, bolt sizing and embedment depth.
   4. Specific details of restraints including anchor bolts for mounting and maximum loading at each location.
   5. Drawings showing methods of suspension, support guides for piping.
   6. Provide installation instructions, drawings and field supervision to assure proper installation and performance.

1.6 MANUFACTURER RESPONSIBILITIES

A. Manufacturer of seismic restraints shall have the following responsibilities:
   1. Determine seismic restraint sizes and required locations.
   2. Provide piping and equipment seismic restraints as scheduled or specified.

DocuSign Envelope ID: 330DEBD6-9A9E-4F34-BDCC-1AC1BAA701E9

3. Provide installation instructions, drawings and field supervision to assure proper installation and performance.
4. Seismic restraints shall be designed for the lateral and vertical forces required by the California Building Code for the specific project type and site. Confirm lateral and vertical forces and site-specific design criteria with the project Structural Engineer.

1.7 DEFINITIONS

A. Life Safety Systems:
   1. All components involved with fire protection including sprinkler and standpipe piping, fire pumps, jockey pumps, fire pumps control panels, service water supply piping, water storage tanks, fire smoke dampers, emergency pressurization systems, smoke exhaust systems, etc. Life safety system restraints shall be designed with an Importance Factor of 1.5.

B. Positive Attachment:
   1. A positive attachment is defined as a cast-in anchor, a drill-in wedge anchor, a double-sided beam clamp loaded perpendicular to a beam, or a welded or bolted connection to structure. Single sided “C” type beam clamps for support rods of overhead fire protection piping or any other equipment are not acceptable as seismic anchor points.

PART 2 - PRODUCTS

2.1 ACCEPTABLE MANUFACTURERS

A. Piping Seismic Bracing: Kin-Line, Super Strut, Mason Industries

B. Equipment Seismic Bracing: Mason Industries (MII), Vibration Mountings & Control (VMC), Amber-Booth (AB), Vibration Eliminator (VEC), Vibrex Vibration Control Systems (VVC)

2.2 SEISMIC RESTRAINTS

A. General:
   1. Provide restraints capable of safely accepting forces defined by the project Structural Engineer, without failure, to maintain equipment and piping in a captive position. Restraints must not transmit objectionable vibration or noise. Submit calculations by a structural or civil engineer licensed and registered in the State of the California to verify seismic restraint and cable capacities. Provide products with current OSHPD certification OPA numbers, provide calculations demonstrating compliance with regulatory requirements.
      a. Seismic Restraint, Type I: All directional seismic snubbers shall consist of interlocking steel members restrained by molded neoprene bushing compounded to bridge bearing specifications. Bushing shall be replaceable and a minimum of ¼-inch thick. Rated loadings shall not exceed 1,000 psi. Snubbers shall be manufactured with an air gap between hard and resilient material of not less than ⅛ inch or more than ¼ inch. Snubbers shall be installed with factory set clearances. The capacity of the seismic snubber at ⅜-inch deflection shall be equal or greater than the load assigned to the mounting grouping controlled by the snubber multiplied by the applicable “G” force. Submittals shall include the load deflection curves up to ½-inch deflection in the X-, Y- and Z-planes. Snubbers shall have an anchorage pre-approval “OPA” number from OSHPD in the State of California verifying the maximum certified horizontal and vertical load ratings.
         Type Z-1225-1 ..... MII
      b. Seismic Restraint, Type III: Seismic solid braces shall consist of steel angles or channels to resist seismic loads with a minimum safety factor of 2 and arranged to provide all directional restraint. Seismic solid brace end connectors shall be steel assemblies that swivel to the final installation angle and utilize two through bolts to provide proper attachment. Seismic solid brace assembly shall have anchorage pre-approval number from OSHPD in the State of California verifying the maximum certified load ratings.
         Type SSBS ..... MII

DocuSign Envelope ID: 330DEBD6-9A9E-4F34-BDCC-1AC1BAA701E9

PART 3 - EXECUTION

3.1 GENERAL

A. Install in accordance with manufacturer's recommendations and written instructions.

3.2 SEISMIC RESTRAINTS

A. General:
   1. Where solid brace restraints are located, the equipment or piping support rods shall be angle braced for compression loads.
   2. At all locations where solid brace restraints are attached to pipe clevises, the clevis cross bolt shall be reinforced with cross braces.
   3. Provide drill-in concrete anchors for ceiling and wall installation and female wedge type for floor-mounted equipment.

B. Seismic Restraint of Piping:
   1. Fire protection piping shall be braced in accordance with California Building Code, ASCE 7-05, and NFPA 13 and 14.

C. Seismic Restraint of Equipment:
   1. All fire protection equipment is considered life safety equipment and shall be seismically restrained using the seismic force levels for life safety equipment.

END OF SECTION

DocuSign Envelope ID: 330DEBD6-9A9E-4F34-BDCC-1AC1BAA701E9

SECTION 99-210550

ACCESS DOORS IN GENERAL CONSTRUCTION AND COLOR-CODED IDENTIFICATION BUTTONS FOR FIRE PROTECTION

PART 1 - GENERAL

1.1 WORK INCLUDED

A. The work of this Section shall include, but is not limited to, the following:
   1. Furnishing access doors for installation in general construction and color-coded identification dots.

1.2 RELATED DOCUMENTS

A. Section 99-210501 – Fire Protection General Provisions

B. Section 99-210553 – Systems Identification for Fire Protection

1.3 REFERENCE STANDARDS

A. ASME – American Society of Mechanical Engineers
   1. ASME A13.1 – 2007: Scheme for the Identification of Piping Systems

B. ASTM – American Society for Testing and Materials
   1. ASTM A167: Standard Specification for Stainless and Heat-Resisting Chromium-Nickel Steel Plate, Sheet and Strip
   2. ASTM A1008: Standard Specification for Steel, Sheet, Cold-Rolled, Carbon, Structural, High-Strength Low-Alloy

C. NAAMM – National Association of Architectural Metal Manufacturers
   1. AMP 500-06 – Metal Finishes Manual for Architectural and Metal Products

D. UL – Underwriters Laboratories Inc.
   1. UL Fire Resistance – 2009: Fire Resistance Directory set

1.4 QUALITY ASSURANCE

A. Single-Source Responsibility: Obtain doors for the entire project from a single manufacturer.

B. Fire-Resistive Rating: Wherever access doors are required in construction where a fire-resistive classification is indicated, on the Architectural documents, provide access door assembly with panel door, frame, hinge and latch from manufacturer listed in Underwriters Laboratories Inc.'s "Building Materials Directory" for required rating.
   1. Provide UL Label on each fire-rated access door.

C. Furnish inserts and anchoring devices that must be built into other work for installation of access doors.

1.5 SUBMITTALS

A. Shop Drawings: Submit access door locations superimposed on the fire protection piping layout shop drawings. Submit manufacturer's data on access doors including size and type.

PART 2 - PRODUCTS

2.1 ACCEPTABLE MANUFACTURERS

A. Access Doors: Milcor Inc., Karp Associates, Inc., J.L. Industries, Acudor, Williams Brothers

B. Color-Coded Identification Buttons: Brady/Seton, Stranco

2.2 ACCESS DOOR CONSTRUCTION

A. Provide recessed type as required to accept matching ceiling tile or drywall, etc.

B. Provide UL-rated doors for fire-rated construction.

DocuSign Envelope ID: 330DEBD6-9A9E-4F34-BDCC-1AC1BAA701E9

C. Provide flush type steel framed panel with concealed continuous piano hinges for masonry or concrete construction. Provide textured frame for drywall construction.

D. Provide cam type locking device. Provide cylinder lock type access doors located in public corridors and washrooms complete with master keys.

E. Provide insulated doors in insulated or acoustically rated construction.

F. Furnish access doors of proper size for access to concealed equipment. Unless otherwise indicated, minimum size to be 12-inch by 12-inch for hand access and minimum 18-inch by 18-inch for valve and actuator access and 24-inch by 24-inch for equipment access. The following schedule is based on Karp Associates Inc.:
   1. Rated Construction: Fire-rated access door UL “B” Label Model KRP
   2. Non-Rated Dry Wall Construction: Model KDW
   3. Non-Rated Masonry, Concrete: Model DSC 214-M
   4. Non-Rated Ceramic Tile, Stainless Steel, Satin Finish: Model DSC 214-M
   5. Non-Rated Plaster Wall: Model DSC 214-PL
   6. Non-Rated Plaster Ceilings: Model DSC 210-PL

G. Provide color-coded dots on access doors and accessible ceiling tiles to indicate type of service.

PART 3 - EXECUTION

3.1 GENERAL

A. Coordinate location of access doors in hung ceilings, furred spaces, walls, etc., to provide access to concealed work items requiring maintenance and/or adjustment. Obtain approval of the Architect for the locations of such access doors.

B. Locate and group equipment requiring access doors. Coordinate location of equipment with other trades to minimize number of access doors in one area.

C. Provide access doors for maintenance or adjustment purposes for fire protection system components, including but not limited to the following:
   1. Valves
   2. Flow switches
   3. Concealed equipment

D. Access doors shall be marked by small color markings at corner of tile or door in accordance with the following color assignments:
   1. Fire Protection – Red

END OF SECTION

DocuSign Envelope ID: 330DEBD6-9A9E-4F34-BDCC-1AC1BAA701E9

SECTION 99-210553

SYSTEMS IDENTIFICATION FOR FIRE PROTECTION

PART 1 - GENERAL

1.1 WORK INCLUDED

A. The work of this Section shall include, but is not limited to, the following:
   1. Valves, automatic control valves, dampers (including smoke and combination fire/smoke dampers) and automatic control dampers identification
   2. Equipment identification
   3. Piping identification
   4. Signage

1.2 RELATED DOCUMENTS

A. Section 99-210501 – Fire Protection General Provisions

B. Section 99-210550 – Access Doors in General Construction and Color-Coded Identification Buttons for Fire Protection

1.3 REFERENCE STANDARDS

A. ASME – American Society of Mechanical Engineers
   1. ASME A13.1 – 2007: Scheme for the Identification of Piping Systems

1.4 QUALITY ASSURANCE

A. Piping identification shall comply with ASME Standard A13.1.

1.5 SUBMITTALS

A. Submit the following:
   1. Valve identification chart
   2. Automatic control valve identification chart (obtain from the Building Management System contractor for inclusion with this submittal)
   3. Damper identification chart (including smoke and combination fire/smoke dampers)
   4. Automatic control damper identification chart (obtain chart from the Building Management System contractor for inclusion with this submittal)
   5. Lists of pipe and equipment to be labeled
   6. Color chart

B. Product Data: Manufacturer's latest published data for materials, equipment and installation, including samples of valve tags, equipment identification and piping identification.

C. Maintenance Manuals: Provide valve tag schedules for inclusion in maintenance manuals.

PART 2 - PRODUCTS

2.1 ACCEPTABLE MANUFACTURERS

A. Brady/Seton

B. Stranco

C. Kolbi

2.2 VALVE IDENTIFICATION

A. All tagged components shall be in accordance with ASME A13.1.

B. For valves, use metal tags 2-inch minimum diameter, fabricated of 19-gauge polished brass, stainless steel or aluminum.
   1. Attach tags with jack chain "S"-hook or split ring of same materials.

DocuSign Envelope ID: 330DEBD6-9A9E-4F34-BDCC-1AC1BAA701E9

2. Provide engraved/stamped tags with black ink-filled ¼-inch high letters and ½-inch high numbers.
3. Provide $^{5}/_{32}$-inch hole for fastener.

2.3 PIPE IDENTIFICATION

A. Pipe markers shall have 1.25-inch high letters and integral directional flow arrows. Smaller letters may be used only when space does not permit 1.25-inch high lettering.

B. For piping up to 5-inch diameter, use pre-formed snap-on markers. For piping 6-inch diameter and up, use pre-formed strap-on markers with nylon straps.

C. Material: Semi-rigid colored vinyl; 15 gauge up to 1-inch pipe, 30 gauge for all other pipe sizes.

D. Seton “Setmark” or equal.

E. Pressure-sensitive tapes are unacceptable.

2.4 EQUIPMENT IDENTIFICATION

A. Fire Protection equipment shall be identified by means of nameplates permanently screw-fastened to the equipment. Nameplates shall be black surface, white core laminated bakelite with engraved letters. Plates shall be a minimum of 3-inch long by 1-inch wide with white letters ⅜-inch high.

2.5 SIGNAGE

A. Provide engraving stock melamine plastic laminate, complying with FS L-P-387, in sizes and thicknesses indicated, engraved with engraver's standard letter style of sizes and wording indicated, black with white core (letter color) except as otherwise indicated, punched for fastening except where adhesive mounting is necessary because of substrate.
   1. Thickness: $^{1}/_{16}$-inch for signs up to 20 square inches or 8-inch length; ⅛-inch for larger signs.
   2. Fasteners: Self-tapping stainless steel screws, except contact type permanent adhesive where screws cannot or should not penetrate substrate.

PART 3 - EXECUTION

3.1 VALVE IDENTIFICATION

A. Provide schedules of all valves showing identification number, size, type and service of each valve. Provide separate list for each separate type of system. Incorporate in maintenance manuals.

3.2 EQUIPMENT IDENTIFICATION

A. Identify equipment with identical letter and/or number as used on the Drawings. Where space is available, use full name of equipment. Attach nameplates in a permanent manner in a location that will be clearly visible after installation is complete.

3.3 PIPING IDENTIFICATION

A. Piping identification shall be in conformance with the ASME A13.1.

B. Identify piping systems with color-coded bands, sharply contrasting with background. Locate bands near strategic points, such as valves, items of equipment, changes in direction, wall penetrations, capped stub-out for future connection and every 40 feet of straight runs. If necessary, paint a strip background of black or white to obtain contrast.

C. Apply bands where they can be easily read. Provide bands with backgrounds of different colors.

3.4 ACCESS IDENTIFICATION

A. Identify service, piping and equipment behind all architectural access doors.

B. Removable ceiling tile shall be marked by small color markings at corner of tile or door in accordance with the following color assignment:
   1. Fire Protection – Red

DocuSign Envelope ID: 330DEBD6-9A9E-4F34-BDCC-1AC1BAA701E9

3.5 INSTALLATION OF IDENTIFICATION

A. Where identification is to be applied to surfaces which require insulation, painting or other covering or finish, including valve tags in finished spaces, install identification after completion of covering and painting. Install identification prior to installation of acoustical ceilings and similar removable concealment.

END OF SECTION

DocuSign Envelope ID: 330DEBD6-9A9E-4F34-BDCC-1AC1BAA701E9

SECTION 99-210800

COMMISSIONING OF FIRE SUPPRESSION

PART 1 - GENERAL

1.1 WORK INCLUDED

A. The work of this Section shall include, but is not limited to, the following:
   1. Work under this Contract shall conform to the requirements of Parts 1 through 7 of the Special Previsions, General Requirements, Conditions of the Contract, and Supplementary Conditions. This specification covers commissioning of the complete Fire Protection Systems for the project.
   2. Furnish labor and material to accomplish the complete commissioning of the Fire Protection Systems as specified herein.
   3. Start-up and testing of the Fire Protection System equipment.
   4. Testing and adjusting piping and central systems.
   5. Cooperation with the Commissioning Authority.
   6. Providing qualified personnel for participation in commissioning tests.
   7. Providing equipment, materials, and labor as necessary to correct construction and/or equipment deficiencies found during the commissioning process.
   8. Providing Operation and Maintenance Manuals, and as-built drawings to the Commissioning Authority for verification.
   9. Providing training and demonstrations for the Fire Protection Systems.

B. Commissioning work shall be a team effort to ensure that all fire protection equipment and systems have been completely and properly installed, function together correctly to meet the design intent, and document system performance parameters for fine-tuning of control sequences and operational procedures. Commissioning shall coordinate system documentation, equipment start-up, control system calibration, testing, and verification and performance testing.

C. The commissioning team shall be made up of representatives from the Owner, design professionals, major equipment suppliers, and construction trades. The trades represented on the commissioning team shall include, but not be limited to, piping and fitting, Building Management System (BMS) (Division 23), fire pump manufacturer, fire protection and electrical. The lead person for each trade who will actually perform or supervise the work is to be designated as the representative to the commissioning team. Responsibility for various steps of the commissioning process shall be divided among the members of the commissioning team, as described in this Section.

D. The Commissioning Authority, retained by the Owner, shall have responsibility for coordinating and directing each step of the commissioning process.

E. Fire protection system installation, start up, testing, preparation of O&M manuals, and operator training are the responsibility of the Division 21 Fire Protection Contractors, with coordination, observation, verification and commissioning the responsibility of the Commissioning Authority. The commissioning process does not relieve Division 21 (Fire Protection) from the obligations to complete all portions of the work in a satisfactory and fully operational manner.

F. Definitions
   1. Commissioning: The process of ensuring that systems are designed, installed, functionally tested and capable of being operated and maintained to perform in conformity with the design intent. For this project, the commissioning includes construction, start up, acceptance, and training.
   2. Commissioning Authority: The designated person, company, or agent, retained by the Owner, who implements the overall commissioning process.
   3. Commissioning Plan: A document defining the commissioning process, which is developed by the Commissioning Authority.

DocuSign Envelope ID: 330DEBD6-9A9E-4F34-BDCC-1AC1BAA701E9

4. Commissioning Report: The document that records the results of the commissioning process, including the as-built performance of the fire protection system and unresolved issues, and documents all sign-offs.
5. Commissioning Specification: The Contract Document that details the objective, scope, and implementation of the construction and acceptance phases of the commissioning process as developed in the design-phase Commissioning Plan.
6. Commissioning Team: Those people responsible for working together in carrying out the commissioning process.
7. Design Intent: A detailed explanation of the ideas, concepts, and criteria that are defined by the Owner to be important. This typically is an expansion of the information provided in the Owner's Program.
8. Design Intent Document: A detailed written document, evolving throughout the commissioning process, clearly defining items and criteria of the design intent.
9. Functional Performance Testing (FPT): The process of determining the ability of the fire protection system to deliver services in accordance with the final design intent.
10. Construction Documents: Design plans and specifications. Also referred to as Contract Documents.
11. Design Professional: The Owner’s Architectural, Engineering and Other Consultants who prepared the Construction Documents.
12. TAB: Testing and Adjusting work.
13. Verification: That full range of checks and tests carried out to determine if all components, systems, sub-systems, and interfaces between systems operate in accordance with the Contract Documents. In this context, “operate” includes all modes and sequences of control operation, interlocks and conditional control responses, and specified responses to abnormal conditions.

G. Purpose: The commissioning is a process and its purpose is to:
1. Clearly document the design intent.
2. Verify that the systems installation and performance is in accordance with the plans, specifications and design intent.
3. Train the Owner’s operators so that they fully understand the design intent and the operation and maintenance requirements of the equipment.

H. The work included in the commissioning process involves a complete and thorough evaluation of the operation and performance of all components, systems, and sub-systems. The following equipment and systems shall be evaluated:
1. Fire standpipe systems
2. Fire pumps
3. Pump controllers
4. Starters furnished by Division 21 (Fire Protection)
5. Coordination with the BMS (Division 23)

I. Timely and accurate documentation is essential for the commissioning process to be effective. Documentation required as part of the commissioning process shall include but not be limited to:
1. Progress and status reports, including deficiencies noted
2. Minutes from all meetings
3. Pre-start, and start-up procedures
4. Training agenda and materials
5. As-built records
6. Commissioning report
7. Operational and Maintenance (O&M) manuals

J. Detailed testing shall be performed on all installed equipment and systems to ensure that operation and performance conform to the Contract Documents. All tests shall be witnessed by the Commissioning Authority. The following testing is required as part of the commissioning process:
1. Verification tests are comprised of a full range of checks and tests to determine that all components, equipment, systems, and interfaces between systems operate in accordance

DocuSign Envelope ID: 330DEBD6-9A9E-4F34-BDCC-1AC1BAA701E9

with the Contract Documents. This includes all operating modes, interlocks, control responses, and specific responses to abnormal or emergency conditions.

2. Functional performance testing shall determine if the fire protection system is providing the required services in accordance with the finalized design intent.

K. Comprehensive training of O&M personnel shall be performed by the Fire Protection Contractor, and where appropriate by other sub-contractors, and vendors prior to turnover of building to the Owner. The training shall include classroom instruction, along with hands-on instruction on the installed equipment and systems. All training sessions shall be videotaped or recorded on alternative audiovisual media.

1.2 RELATED DOCUMENTS

A. Parts 1 through 7 of the Special Previsions

B. Section 99-210501 – Fire Protection General Provisions

C. Section 99-210548 – Vibration Isolation and Seismic Restraints for Fire Protection

D. Section 99-210550 – Access Doors in General Construction for Fire Protection

E. Section 99-210553 – Systems Identification for Fire Protection

F. Section 99-211319 – Fire Protection Systems

G. Division 22 – Plumbing Specifications

H. Division 23 – Mechanical Specifications

I. Division 26 – Electrical Specifications

1.3 REFERENCE STANDARDS

The following references are a guideline to the commissioning process and shall be applied as appropriate:

A. AABC – Associated Air Balance Council

1. ACG Commissioning Guideline – 2005 – For Building Owners, Design Professionals and Commissioning Service Providers

B. ASHRAE – American Society of Heating, Refrigerating and Air-Conditioning Engineers

1. ASHRAE Guideline 1.1 – 2007: HVAC&R Technical Requirements for the Commissioning Process
2. ASHRAE Guideline 4 – 2008: Preparation of Operating and Maintenance Documentation for Building Systems
3. The 2007 ASHRAE Handbook – HVAC Applications

1.4 QUALITY ASSURANCE

Commissioning Authority shall meet the following qualifications:

A. Commissioning Authority shall have a minimum of five (5) years of demonstrated experience in the commissioning of Fire Protection Systems similar in size and complexity to this project.

B. Commissioning Authority shall hold a Certified Commissioning Professional (CCP) designation from the Building Commissioning Association.

1.5 SUBMITTALS

A. As-built records

B. Pre-test and Final Test Report Forms (forms format only) for each system and piece of equipment

C. Pre-test and Final Test Report Forms for each system and piece of equipment

D. Verification and functional performance testing procedures

E. Test and Balance report and verification datasheets

F. Commissioning Report

G. Operational and Maintenance (O&M) manuals

DocuSign Envelope ID: 330DEBD6-9A9E-4F34-BDCC-1AC1BAA701E9

1.6 ROLES AND RESPONSIBILITIES

A. Contracting Officer is the Building Owner and Facility Engineering Dept.
   1. Contracting Officer will advise Commissioning Authority regarding changes in building occupancy and/or usage.
   2. Assign maintenance personnel and schedule them to participate in meetings, training session as follows:
      a. Construction-Phase coordination meeting
      b. Initial Owner training session at initial placement of major equipment
      c. Maintenance orientation and inspection
      d. Piping test and flushing verification meetings
      e. Procedures meeting for Testing and Adjusting
      f. Owner's training session
      g. Verification demonstrations
      h. Final review at acceptance meeting
   3. Provide qualified personnel for video taping and editing of training sessions.
   4. Video tape construction process, hidden shafts, etc.
   5. Provide any utilities required for the commissioning process.
   6. Provide detailed program clearly stating the Owner's objectives, parameters, budgets, etc. for this facility.

B. Commissioning Authority
   1. Develop the commissioning requirements and all related testing, verification and quality control sections.
   2. Prepare the commissioning program required as part of the Commissioning Specification. Include lists of all contractors for commissioning events by name, firm, and trade specialty.
   3. Develop detailed pre-test and final test reports forms, to be used by the Commissioning Authority for data recording purposes throughout the testing process. The Commissioning Authority shall specifically develop these forms for each system and piece of equipment installed on the project. All forms to be submitted for approval a minimum of one hundred and twenty (120) days prior to initial testing.
   4. Execute the commissioning program, through organization of all tests, meetings, demonstrations, training events and performance verifications described in the Contract Documents and the approved commissioning program. Organizational responsibilities include preparation of agendas, attendance lists, arrangements for facilities and timely notification to participants for each commissioning event. The Commissioning Authority shall act as chairman at all commissioning events and assure the execution of all agenda items. The Commissioning Authority shall prepare minutes of every commissioning event and send copies to all those in attendance and the Owner within five (5) workdays of the event.
   5. Review the Construction Documents which define the scope of the commissioning process and the final performance of the system. This includes verification that appropriate commissioning guidelines have been followed, and to document the performance of each piece of equipment and each system.
   6. Review all approved submittals for coordination with the commissioning process and the performance testing of the Fire Protection Systems.
   7. Schedule regular Construction-Phase coordination meetings to include Owner and Contractor and Design Professional. These meetings shall be for the purpose of reviewing the complete commissioning program and establishing tentative schedules for fire protection system orientation and inspections, O&M submittals, training sessions, system flushing and testing, job completion, test and adjust (TAB) work and verification and functional performance testing.
   8. Schedule Owner training sessions so that they will be held at an appropriate timeframe relative to the turnover of the systems to the Owner. These sessions shall be attended by the Owner's O&M personnel, the Contractor, the Design Professional, and the Commissioning Authority. The Design Professional shall conduct this session giving an overview of the system, the system design goals and the reasoning behind the selection of the equipment.

DocuSign Envelope ID: 330DEBD6-9A9E-4F34-BDCC-1AC1BAA701E9

9. Conduct and record the results of periodic inspections, undertaken by the Commissioning Authority, of work in progress to ensure that all systems are installed according to specifications. The Commissioning Authority shall note in writing any deficiencies discovered. Once the deficiencies have been corrected, as reported by the Contractor, the Commissioning Authority shall re-inspect the work and report that the corrections have been made.
10. Assist the Contractor in recommending solutions to minor deficiencies.
11. Conduct the system orientation and inspection following the initial training session. Any subsequent system orientation and inspection shall be conducted by the Contractor. The emphasis of this system orientation and inspection shall be an observation of the equipment location with respect to accessibility. Prepare minutes of this meeting, with separate summary of deficiency findings by the Owner and Commissioning Authority. Distribute to attendees and the Owner.
12. Adequate accessibility for maintenance and component replacement or repair is the Contractor's responsibility and shall be checked by the Commissioning Authority.
13. Receive and review the Operation and Maintenance (O&M) manuals as submitted by the Contractor (ensuring that they follow the specified outline and format), and as reviewed and approved by the Design Professional. Insert systems description as provided by the Design Professional.
14. Witness equipment and system start-up and testing. Ensure the results are documented (including a summary of deficiencies), and incorporated in the O&M manuals. The Commissioning Authority shall record all test results on pre-test and final test forms for each piece of equipment.
15. Prior to initiating the TAB work, meet with the Owner, Contractor, Design Professional, and TAB Contractor. The TAB Contractor shall outline TAB procedures and get concurrence from the Design Professional and Commissioning Authority. Ensure that the TAB Contractor has all forms required for the job database and understands their importance and use.
16. Schedule the O&M training sessions. All training sessions shall be on-site, except where otherwise specified. These training sessions are to be attended by the Owner, Commissioning Authority, Design Professional, Contractors and equipment suppliers as necessary. The format shall follow the outline in the O&M manuals. This system orientation and inspection should include hands-on training. The Commissioning Authority shall be solely responsible for recording all demonstration and training sessions on videotape, or alternative approved media, and furnish two (2) copies of the recording media to the Owner. Each session shall clearly reflect the content of each training session. Video tapes or other approved media and enclosures shall be neatly labeled.
17. Submit detailed verification test procedures and datasheets to the Design Professional for review.
18. Submit detailed FPT procedures to the Design Professional for review and acceptance.
19. Upon receipt of notification from the Design Professional that the systems have been completed and are operational, the Commissioning Authority shall proceed to verify the TAB report and operation of the control systems in accordance with the Commissioning Specification.
20. Conduct verification tests.
21. Record verification test data, and submit to the Design Professional for review and acceptance.
22. Provide detailed checklists datasheets to document verification tests.
23. Provide and install calibrated test instrumentation to monitor and record data as necessary.
24. Certify that the systems are ready for functional performance testing.
25. Observe and record functional performance tests.
26. Submit Functional Performance Test report to the Design Professional for review.
27. Re-test if performance deficiencies are found, corrected and additional testing is requested.
28. Review as-built drawings for accuracy with respect to installed systems. Review revisions to achieve accuracy.
29. Ensure that the O&M manuals and all other as-built records have been updated to include all modifications made during the Construction Phase.

DocuSign Envelope ID: 330DEBD6-9A9E-4F34-BDCC-1AC1BAA701E9

30. Observe and record repeated functional performance tests to correct any performance deficiencies. Revise and re-submit the commissioning report.
31. Prepare the final commissioning report.
32. Assemble the final project documentation, which shall include the commissioning report and all as-built records. Submit this documentation to the Design Professional for review and acceptance.
33. The Commissioning Authority shall verify that all O&M manuals, “as-built” documentation, and training manuals and training sessions are complete in every aspect and in accordance with the project specifications. The Commissioning Authority shall supplement the above documentation, as required, to make them complete.

C. Architect
1. Provide support to the Design Professional who must provide a service as a part of the commissioning process. This shall include providing adequate space for equipment installation and maintenance.
2. Conduct periodic inspections of work in progress to ensure that all systems and equipment are installed according to specifications.
3. Provide data on structure, building materials, interior finishes, and furnishings for their effect on fire protection systems.

D. Fire Protection Design Professional
1. Provide documentation of initial design concepts and Design Intent on the Owner’s program.
2. Provide system design parameters and obtain approval of Owner.
3. Prepare Construction Documents incorporating the Commissioning Specification requirements and description of the system.
4. The Design Professional retains responsibility for the system evaluation, adequacy of the system to meet design intent, capacity of the system, quality control check or any of the other elements of the system design.
5. Participate in O&M personnel orientation and inspection at the final construction stage.
6. Attend initial meeting with TAB representative as scheduled by the Commissioning Authority.
7. Review verification and functional performance testing procedures submitted by the Commissioning Authority, for conformance with the Construction Documents.
8. Review TAB report and verification datasheets for system conformance to the Contract Documents. Issue to the Commissioning Authority a report noting deficiencies requiring correction.
9. Review Functional Performance Testing report for deficiencies in meeting the finalized design intent.
10. Review as-built records as required by the Contract Documents and turn them over to the Commissioning Authority for inclusion in final project documentation.
11. Review and comment on the final commissioning report.

E. Electrical Design Professional
1. Provide documentation for electrical services to be provided for specific fire protection equipment requirements.
2. Provide electrical system information confirming compatibility with electrical service requirements specified by the fire protection design professional for all fire protection equipment and systems. Provide information necessary for the basis of design.
3. Prepare the Contract Documents that coordinate interfaces between life safety systems, BMS, and fire protection systems including commissioning specifications.
4. Attend Construction-Phase coordination meeting scheduled by the Commissioning Authority.
5. Participate in the start-up of fire protection equipment and systems.
6. Participate in the fire protection training sessions as required.
7. Participate in review of shop drawings for fire protection equipment.
8. Prepare electrical ladder wiring diagrams indicating power source connections to fire protection equipment and systems and interrelationships between life safety systems and fire protection systems and equipment, including a review of the automatic control and/or Building Management System.
9. Prepare as-built electrical service record drawings as required by the Contract Documents.

DocuSign Envelope ID: 330DEBD6-9A9E-4F34-BDCC-1AC1BAA701E9

10. Verify that any space requirements for electrical equipment are in accordance with relevant code requirements.
11. Participate in O&M personnel orientation and inspection sessions.

F. General Contractor
1. Include cost for commissioning requirements in the contract price.
2. Coordinate construction progress with the commissioning schedule to assure that the building envelope and systems that affect proper operation and control of fire protection equipment and systems being tested are completed prior to testing.
3. Include commissioning requirements in the Fire Protection, Electrical, and Division 23 (BMS) controls contracts, as well as all other sub-contractors, to ensure cooperation of all parties in the fire protection commissioning program.
4. Ensure acceptable representation, with the means and authority to prepare and coordinate execution of the fire protection commissioning program as described in the Contract Documents.
5. Issue a statement that TAB work has been completed, and submit the final TAB reports for review.
6. Issue a statement that fire suppression system controls have been tested and calibrated.
7. Remedy deficiencies identified in verification tests.
8. Evaluate any performance deficiencies identified in the Functional Performance Testing report for non-performance with the Contract Documents.
9. The equipment supplier shall document the performance of their equipment. Performance testing shall be witnessed by the Commissioning Authority.

G. Fire Protection Contractor
1. Include cost of commissioning requirements in the contract price.
2. Include requirements for submittal data, O&M data, and training in each purchase order or sub-contract written.
3. Ensure cooperation and participation of specialty sub-contractors such as testing and adjusting (TAB).
4. Ensure participation of major equipment manufacturers in appropriate training and testing activities.
5. Attend Construction-Phase coordination meeting scheduled by the Commissioning Authority.
6. Assist the Commissioning Authority in all verification and functional performance tests.
7. Prepare preliminary schedule for fire protection system orientations and inspections, O&M manual submissions, training sessions, pipe system testing, flushing and cleaning, equipment start-up, TAB and task completion for use by the Commissioning Authority. Update schedule as appropriate throughout the construction period.
8. Attend initial training session.
9. Conduct fire protection system orientation and inspection at the equipment placement completion stage.
10. Update drawings to the record condition to date, and review with the Commissioning Authority.
11. Gather O&M data on all equipment, and assemble in binders as required by the Commissioning Specification and Section 99-210501 – Fire Protection General Provisions. Submit to Commissioning Authority prior to the completion of construction.
12. Coordinate with the Commissioning Authority to provide sufficient advanced notice so that the witnessing of equipment and system start-up and testing can begin.
13. Notify the Commissioning Authority a minimum of two weeks in advance of the time for start of the TAB work. Attend the initial TAB meeting for review of the official TAB procedures.
14. Participate in, and schedule vendors and Contractors to participate in the training sessions as set up by the Commissioning Authority.
15. Provide written notification to the General Contractor and Commissioning Authority that the following work has been completed in accordance with the Contract Documents, and that the equipment, systems, and sub-system(s) are operating as required:
    a. Fire protection equipment including all pumps, alarm devices, and all other equipment furnished under this Division.

DocuSign Envelope ID: 330DEBD6-9A9E-4F34-BDCC-1AC1BAA701E9

b. Fire standpipe system and equipment, sprinkler systems and equipment.
c. Fire stopping in the fire-rated construction, including caulking, gasketing and sealing of smoke barriers.

16. The equipment supplier shall document the performance of their equipment. Performance testing shall be witnessed by the Commissioning Authority.
17. Provide a complete set of as-built records to the Commissioning Authority.

H. Test, Adjust, and Balance (TAB) Contractor
1. Include cost for commissioning requirements in the contract price.
2. Attend initial commissioning coordination meeting scheduled by the Commissioning Authority.
3. Submit the TAB procedures to the Commissioning Authority and Design Professional for review and acceptance.
4. Attend the TAB review meeting scheduled by the Commissioning Authority. Be prepared to discuss the procedures that shall be followed in testing and adjusting the fire protection system.
5. Participate in training sessions as scheduled by the Commissioning Authority.
6. At the completion of the TAB work, and the submittal of the final TAB report, notify the Fire Protection Contractor and the General Contractor.
7. Participate in verification of the TAB report, which will consist of repeating any selected measurement contained in the TAB where required by the Commissioning Authority for verification or diagnostic purposes.
8. The equipment supplier shall document the performance of their equipment. Performance testing shall be witnessed by the Commissioning Authority.

I. Equipment Suppliers and Miscellaneous Contractors
1. Include cost for commissioning requirements in the contract price.
2. Provide submittals, and appropriate O&M manual section(s).
3. Attend initial commissioning coordination meeting scheduled by the Commissioning Authority.
4. Participate in training sessions as scheduled by the Commissioning Authority.
5. Demonstrate performance of equipment as applicable.

J. Electrical Contractor
1. Include costs for commissioning requirements in the contract price.
2. Ensure participation in testing of fire pumps and miscellaneous fire protection equipment.
3. Ensure coordination, installation, and operation interfaces between life safety and fire protection systems.

1.7 DOCUMENTATION

The Commissioning Authority shall oversee and maintain the development of commissioning documentation. The commissioning documentation shall be kept in three-ring binders, and organized by system and sub-system when practical. All pages shall be numbered, and a table of contents page(s) shall be provided. The commissioning documentation shall include, but not be limited to, the following:

A. Approved TAB report for the systems being commissioned.

B. All accepted shop drawings and hydraulic calculations of fire protection equipment. Shop drawings shall be full size sheets folded as required to fit in binders.

C. All pre-functional performance test checklists, signed by indicating personnel, organized by system and sub-system.

D. All verification and functional performance test checklists/results, signed by indicated personnel, organized by system and sub-system.

E. Three copies of the operation and maintenance (O&M) manual(s) specified in other sections of these specifications shall be included with the commissioning documentation. The manuals shall be incorporated in the commissioning documentation prior to commencement of O&M training required in this and other sections of the specification. Preparation of O&M manuals shall be as

DocuSign Envelope ID: 330DEBD6-9A9E-4F34-BDCC-1AC1BAA701E9

specified in Section 99-210501 – Fire Protection General Provisions, Paragraph 3.17 O&M Manuals.

PART 2 - PRODUCTS

2.1 TEST EQUIPMENT

A. The appropriate Contractor(s) shall furnish all special tools and equipment required during the commissioning process. A list of all tools and equipment to be used during commissioning shall be submitted to the Commissioning Authority for approval.

B. The Owner shall furnish necessary utilities for the commissioning process.

2.2 TEST EQUIPMENT – PROPRIETARY

A. Proprietary test equipment and software required by any equipment manufacturer for programming and/or start-up, whether specified or not, shall be provided by the manufacturer of the equipment. Manufacturer shall provide the test equipment, demonstrate its use, and assist in the commissioning process as needed. Proprietary test equipment (and software) shall become the property of the Owner upon completion of the commissioning process.

PART 3 - EXECUTION

3.1 GENERAL

A. A pre-construction meeting of all commissioning team members shall be held at a time and place designated by the Owner. The purpose shall be to familiarize all parties with the commissioning process, and to ensure that the responsibilities of each party are clearly understood.

B. The Contractor shall complete all phases of work so the systems can be started, tested, and acceptance procedures undertaken. This includes the complete installation of all equipment, materials, pipe, wire, controls, etc. per the Contract Documents and related directives, clarifications, and change orders.

C. A Commissioning Plan shall be developed by the Commissioning Authority. The Contractor shall assist the Commissioning Authority in preparing the Commissioning Plan by providing all necessary information pertaining to the actual equipment and installation. If contractor-initiated system changes have been made that alter the commissioning process, the Commissioning Authority shall notify the Contracting Officer.

D. Acceptance procedures are normally intended to begin prior to completion of a system and/or sub-systems, and shall be coordinated with the Division 21 Fire Protection Contractor. Start of acceptance procedures before system completion does not relieve the Contractor from completing those systems as per the schedule.

E. The Commissioning Authority shall develop a detailed schedule for acceptance procedures and training. The Commissioning Authority shall work in a cooperative manner with the Contractor to assure that the commissioning process does not interfere with the completion of work in accordance with the overall schedule.

3.2 PARTICIPATION IN ACCEPTANCE PROCEDURES

A. The Contractor shall provide skilled technicians to start up and debug all systems within Division 21 (Fire Protection). These same technicians shall be made available to assist the Commissioning Authority in completing the commissioning program. Work schedules, time required for testing, etc. shall be requested by the Commissioning Authority and coordinated by the Contractor. Contractor shall ensure that the qualified technician(s) are available and present during the agreed-upon schedules and of sufficient duration to complete the necessary tests, adjustments, and/or problem resolutions.

B. System performance problems and discrepancies may require additional technician time, Commissioning Authority time, reconstruction of systems, and/or replacement of system components. The additional technician time shall be made available for subsequent commissioning periods until the required system performance is obtained.

DocuSign Envelope ID: 330DEBD6-9A9E-4F34-BDCC-1AC1BAA701E9

C. The Commissioning Authority reserves the right to question the appropriateness and qualifications of the technicians relative to each item of equipment, system, and/or sub-system. Qualifications of technicians shall include expert knowledge relative to the specific equipment involved and a willingness to work with the Commissioning Authority. Contractor shall provide adequate documentation and tools to start up and test the equipment, systems, and/or sub-systems.

3.3 DEFICIENCY RESOLUTION

A. In some systems, improper adjustments, misapplied equipment, and/or deficient performance under varying loads will result in additional work being required to commission the systems. This work shall be completed under the direction of the Contracting Officer, with input from the Contractor, equipment supplier, and Commissioning Authority. Whereas all members shall have input and the opportunity to discuss, debate, and work out problems, the Contracting Officer shall have final jurisdiction over any additional work done to achieve performance.

B. Corrective work shall be completed in a timely fashion to permit the completion of the commissioning process. Experimentation to demonstrate system performance may be permitted. If the Commissioning Authority deems the experimentation work to be ineffective or untimely as it relates to the commissioning process, the Commissioning Authority shall notify the Contracting Officer, indicating the nature of the problem, expected steps to be taken, and suggested deadline(s) for completion of activities. If the deadline(s) pass without resolution of the problem, the Contracting Officer reserves the right to obtain supplementary services and/or equipment to resolve the problem. Costs incurred to solve the problems in an expeditious manner shall be the Contractor's responsibility.

3.4 ADDITIONAL COMMISSIONING

A. Additional commissioning activities may be required after system adjustments, replacements, etc., are completed. The Contractor(s), suppliers, and Commissioning Authority shall include a reasonable reserve to complete this work as part of their contractual obligations.

3.5 ACCEPTANCE PROCEDURES

A. Verification Tests

1. Scope
   a. Operating tests and checks to verify that all components, equipment, systems, sub-systems, and interfaces between systems operate in accordance with the Contract Documents. These tests are to include all operating modes, interlocks, specified control responses, specific responses to abnormal or emergency conditions and verifications of the proper response of the Building Automation System controllers and sensors.
   b. Verify the validity of the TAB report.
2. Participants

   The Commissioning Authority shall be responsible for preparing the scope of these tests. The Commissioning Authority shall schedule the tests and assemble the commissioning team members who shall be responsible for the tests. Participating contractors, manufacturers, suppliers, etc. shall include all costs to do the work involved in these tests in their proposals. Following is a list of tasks and supporting information that shall be required:

   a. Fire Protection Contractor – Provide the services of technician(s) who is (are) familiar with the construction and operation of this system. Provide access to the contract plans, shop drawings, and equipment cutsheets of all installed equipment.
   b. Electrical Contractor – Provide a foreman electrician familiar with the electrical interlocks, interfaces with emergency power supply, and interfaces with alarm and life-safety systems. Provide access to the contract plans, and all as-built schematics of sub-systems, interfaces, and interlocks.
3. Documentation and Reporting Requirements

DocuSign Envelope ID: 330DEBD6-9A9E-4F34-BDCC-1AC1BAA701E9

a. Provide checklists for each component, piece of equipment, system, and sub-system, including all interfaces, interlocks, etc. Each item to be tested shall have a different entry line with space provided for comments. Separate checklists shall be prepared for each mode of operation. Provide space to indicate whether the mode under test responded as required or not. Also, provide space for all necessary parties to sign off on each checklist.
b. Datasheets used in verification of the proper operation of the control system shall include each controller to be verified, and its location. For each controller, provide space for recording the readout of the controller, the reading at the controller's sensor(s), and any comments. Also, provide space for all necessary parties to sign off on each checklist.
c. All test procedures and datasheets shall be submitted to the design professional for review and acceptance.

4. Instrumentation
   a. The Commissioning Authority shall furnish all measurement instrumentation for the verification tests. All instruments will have calibrated within the six-month period prior to these tests.
5. Procedures
   a. The Commissioning Authority shall direct and witness the verification operating tests and checks for all equipment and systems.
      1) Set the system equipment (i.e. pumps, controllers) into the operating mode to be tested, i.e. normal shut down, normal auto position, normal manual position, unoccupied cycle, emergency power, and alarm conditions.
      2) The Commissioning Authority shall inspect and verify the position of each device and interlock identified on the checklist. Each item shall be signed off as acceptable (yes), or failed (no).
      3) This test shall be repeated for each operating cycle that applies to the fire protection system being tested.
      4) Operating checks shall include all safety cutouts, alarms and interlocks with life-safety systems during all modes of operation of the fire protection system.
      5) If during a test an operating deficiency is observed, appropriate comments shall be added to the checklist datasheet.
      6) Verification of the interface of the Building Management System and the TAB criteria shall be included.
      7) Verification of the proper responses of Building Management System controllers and sensors shall be included.
   b. The Commissioning Authority shall direct and witness the field verification of the final TAB report.
      1) The Commissioning Authority shall select, at random, 10 percent of the report data for verifications.
      2) The TAB Contractor shall be given sufficient advance notice of the date of field verification. However, they shall not be informed in advance of the data points to be verified. The TAB Contractor must use the same instruments (by model and serial number) that were used when the original data were collected.
      3) Failure of an item is defined as:
         a) For all readings, a deviation of more than 10 percent.
      4) A failure of more than 10 percent of the selected items shall result in the rejections of the final TAB report.
   c. If the deficiencies are identified during verification, the General Contractor must be notified, and action taken to remedy the deficiency. The final tabulated checklist datasheets shall be reviewed by the Design Professional and the Commissioning Authority, to determine if verification is complete, and the operating system is functioning in accordance with the Contract Documents.

B. Functional Performance Testing
   1. Scope

DocuSign Envelope ID: 330DEBD6-9A9E-4F34-BDCC-1AC1BAA701E9

a. Functional performance tests shall determine if the fire protection system is providing the required flows and pressure in accordance with the final design intent. Following is a test example:
   1) Determine the ability of the fire pumps to deliver the required volume and pressure to the distribution system.

2. Submittals
   a. Detailed procedures for each series of tests shall be submitted to the Commissioning Authority for review and acceptance. The procedures shall include samples of the datasheets that will be part of the reports.
3. Participants
   a. Participants in the functional performance tests shall be the same as those listed in the verification tests.
4. Instrumentation
   a. In addition to the instrumentation requirements detailed under verification, the Commissioning Authority may need to provide data acquisition equipment to record data for the complete range of testing.
5. Procedures
   a. The Commissioning Authority shall supervise and direct all functional performance tests.
   b. For each test, the Commissioning Authority shall install the measuring instruments and logging devices to record test data for the required test period. The instrumentation shall monitor and record all operating conditions to allow for complete evaluation of the test results.
   c. Measurement will be required to allow for calculation of total capacity of the system for each mode of operation under test.
6. Documentation and Reporting Requirements
   a. All measured data, datasheets, and a comprehensive summary, describing the operation of the fire protection system at the time of testing, shall be submitted to the Commissioning Authority.
   b. A preliminary Functional Performance Test report shall be prepared by the Commissioning Authority and submitted to the Design Professional for review. Any identified deficiencies need to be evaluated by the Design Professional and Construction Manager to determine if they are part of the Contractor's contractual obligations. Construction deficiencies shall be corrected by the responsible Contractor(s) and the specific functional performance test repeated.
   c. If it is determined that the fire protection system is constructed in accordance with the Contract Documents, and the performance deficiencies are not part of the Contract Documents, the Contracting Officer must decide whether any required modifications needed to bring the performance of the fire protection system up to the finalized design intent shall be implemented, or if the test shall be accepted as submitted. If corrective work is performed, the Contracting Officer shall determine if a portion or all required functional performance tests should be repeated, and a revised report submitted.

3.6 OPERATING AND MAINTENANCE MANUAL

A. The operating and maintenance manual shall consist of binders (as described in Section 99-210501 – Fire Protection General Provisions for Fire Protection, Paragraph 3.17 O&M Manuals) with 8.5-inch by 11-inch sheets.

3.7 OPERATING AND MAINTENANCE TRAINING

A. The Fire Protection Contractor, and appropriate sub-contractors, shall provide comprehensive operating and maintenance instruction on building systems in accordance with the Contract Documents prior to delivery. The instruction shall include classroom instruction delivered by competent instructors based upon the contents of the operating manual.

DocuSign Envelope ID: 330DEBD6-9A9E-4F34-BDCC-1AC1BAA701E9

B. Each classroom training period shall be followed by an inspection, explanation and demonstration of the system concerned by the instructors. All specified equipment shall be started up and shut down, with the exception of sprinkler system.

C. The Contractor shall be responsible for organizing, arranging, and delivering in a manner and on a schedule agreeable to the Contracting Officer.

D. The Contractor shall provide, at or before substantial completion, a proposed agenda and schedule of the above training for approval by the Commissioning Authority and the Contracting Officer.

E. Each classroom training session and demonstration shall be recorded on videotape or alternative acceptable media and submitted to the Contracting Officer.

F. The Fire Protection Contractor shall provide a letter of certification to the Project Representative stating that project site training session(s) of at least two (2) hours duration were conducted for this project for the Sub-contractor's supervisory and installing personnel.

END OF SECTION

DocuSign Envelope ID: 330DEBD6-9A9E-4F34-BDCC-1AC1BAA701E9

SECTION 99-211319

FIRE PROTECTION SYSTEMS

PART 1 - GENERAL

1.1 DESCRIPTION

A. Under this Division, the Contractor shall furnish all labor, equipment, appliances, and materials to perform all operations in connection with the installation of a complete and tested fire protection system as described in the Contract Documents.

1.2 RELATED DOCUMENTS

A. Section 99-210501 – Fire Protection General Provisions

B. Section 99-210548 – Vibration Isolation and Seismic Restraints

C. Section 99-210550 – Access Doors in General Construction and Color-Coded Identification Buttons for Fire Protection

1.3 SYSTEM DESCRIPTION

A. Applicable Standards:

1. All Fire Protection design, products, and installation shall comply with the applicable provisions and recommendations of the following jurisdictional codes, authorities and guidelines:
   a. California Building Code, 2013 (2012 IBC)
   b. California Fire Code, 2013 (2012 IFC)
   c. California Code of Regulations, Title 19
   d. National Fire Protection Association Standard 13 “Installation of Sprinkler Systems”, 2013 edition with California amendments
   e. National Fire Protection Association Standard 14 “Installation of Standpipe and Hose Systems”, 2013 edition with California amendments
   f. National Fire Protection Association Standard 25 “Testing and Maintenance of Water Based Fire Protection Systems,, 2011 California edition
   g. National Fire Protection Association Standard 70 “National Electrical Code”, 2011 edition.
   h. National Fire Protection Association Standard 72 “National Fire Alarm Code”, 2013 edition.
   i. Caltrans Standard Requirements
   j. State Codes, Code Amendments and Requirements
   k. California State Fire Marshal Requirements
   l. Factory Mutual Global Requirements: Not required for this project

B.

1. Provide fire protection products including valves, fittings and couplings, supports, anchors, fire stops, sprinklers, etc., that are Underwriters Laboratories listed, and approved by the State Fire Marshal.
2. Fire Protection and Smoke Control design, products, and installation shall comply with the applicable provisions and recommendations of the authorities.

C. Design Parameters:

1. Scope of Fire Protection:
   a. The Fire Protection Drawings issued as part of the Contract Documents indicate the following in diagrammatic manner: location of water services, check valves, shutoff valves, fire sprinkler areas, and special conditions. As such, these Drawings are an interpretation of the project requirements and are to be used as a guide in the layout and design of the complete fire protection system for the entire building floor area; however, it does not relieve the Contractor from providing all work and equipment

DocuSign Envelope ID: 330DEBD6-9A9E-4F34-BDCC-1AC1BAA701E9

necessary to provide a complete and operational system, according to the project requirements and applicable standards.

b. All equipment and devices shall be Underwriters Laboratories listed, and State Fire Marshal approved. Fire Protection Contractor shall sign and seal shop Drawings prior to issuance to Building Department and State Fire Marshal for approval. No work shall be installed without approved shop Drawings.

c. It shall be the responsibility of the Contractor to coordinate the location of all sprinkler heads with final reflected ceiling Drawings.

d. Fire sprinkler mains shall not interfere with the HVAC contractor's ability to place HVAC main ducts tight to bottom of fire proofed structural elements.

e. The Contractor shall provide all offsets, drains and drain plugs for trapped piping, and drainage piping. The Contractor shall notify the Architect, in writing, of all discrepancies in sprinkler head locations where local codes are violated; i.e., allowable distance from walls or exterior glass, small room spacing, stairs, etc.

f. System piping shall be hydraulically designed throughout all areas in accordance with the rules and regulations of the applicable standards using the design densities indicated herein:

1) Fire Sprinklers: The fire sprinkler hydraulic calculations shall include hose allowances as defined for the hazard for inside and outside hose streams as required to meet applicable standards.

2) Hydraulically designed sprinkler systems should be designed for a supply pressure of at least 10 percent, but not less than 10 psi, between available water pressure from flow test and system design demand pressure from the hydraulic calculation.

3) The velocity of water through the fire protection piping system shall not exceed maximum allowable velocities allowed by applicable standards.

4) Entire project shall be sprinklered.

5) All sprinkler system piping shall be installed so that it can be drained.

g. The hydraulic calculations shall be based on current flow data obtained from local water authority. Confirm flow data prior to design and layout of fire protection systems.

2. Wet Fire Sprinkler Density Requirements:

a. All sprinkler systems shall be hydraulically calculated. In the event design criteria information from the project fire insurance underwriter is unavailable at the time of initial design, the following <u>minimum</u> criteria shall be used:

1) Ordinary Hazard – Group 2: Storage areas and mechanical rooms, piping shall be sized to deliver a minimum 0.20 gpm/sq. ft. over an area of 1,500 sq. ft. at most remote location. The protection area per quick response, standard spray pendent and upright sprinklers shall be limited to a maximum of 130 square feet and 100 square feet for quick response, standard spray horizontal sidewall sprinkler.

3. Standpipe Systems: Existing to remain.

4. Zoning of the Fire Protection System: Existing to remain.

a. Wet Sprinkler System: Water flow detection zoning shall be per floor basis with areas not exceeding maximum allowable per NFPA.

5. Type of System: Wet pipe automatic sprinkler system is required throughout unless allowed to be omitted per application sections of 2013 NFPA 13. The sprinkler branchings area to be remodeled will be modified to meet the architectural reflected ceiling plans.

6. Concealed spaces of exposed combustible construction shall be protected by sprinklers except in concealed spaces where sprinklers are not required to be installed by Sections 8.15.1.2.1 (including Annex A.8.15.1.2, A.8.15.1.2.6 & A.8.15.1.2.11) through 8.15.1.2.16 (including Annex A.8.15.1.2.16) and Section 8.15.6 of the 2013 NFPA 13, Section 8.15.1 (Concealed Spaces).

7. Raised Floor: Unless all the requirements of 8.15.6.2 of the 2013 NFPA 13 are met, sprinkler protection shall be installed under all combustible platforms, etc.

DocuSign Envelope ID: 330DEBD6-9A9E-4F34-BDCC-1AC1BAA701E9

8. All sprinkler piping, sprinklers and equipment will be installed and tested in accordance with California Fire Code, 2013, and NFPA 25, 2011 California edition, and the manufacturer's recommendations/guidelines.

1.4 SUBMITTALS

A. Prior to construction submit for approval the following materials and equipment. Submittal should be submitted in a binder and should include equipment cut sheets, dimensions, capacities, wiring diagram and electrical loads, special installation details, etc. Drawings submitted without these items will be returned un-reviewed:

1. Layout drawings, coordinating sprinkler head and piping installation with structure, lighting, sound speakers, mechanical ductwork, diffusers and other ceiling installed items. All submitted plans shall be readable and indicated scale.
2. Name, address, phone number, and fax number of Contractor.
3. Site plan to show the entire project site.
4. Full height cross section, or schematic diagram if required for clarity; including ceiling construction including height. Show beam size, material, and location on plan.
5. Sprinkler and escutcheon plates. Include Sprinkler Identification Number (SIN) nomenclature on fire sprinkler product data, manufacturer's model number, response type, temperature rating, sprinkler type, orifice size and any other information for all sprinklers used.
6. Number of sprinklers protecting floor.
7. Hydraulic calculation criteria.
8. The information on the hydraulic data nameplate for the most remote area.
9. Hydraulic reference points shown on the plan shall correspond with comparable reference points on the hydraulic calculation sheets. Outline/highlight remote area.
10. Provide on the plan the minimum application rate (density) and the design area of application.
11. Provide on the plan the total quantity of water and the pressure required noted at the riser.
12. Relative elevations of sprinklers, distance of sprinkler deflector to ceiling, junction points, and supply or reference points.
13. Provide end-of-line restraint for end sprinkler on each branch line.
14. Any modification to an existing system shall include removal of unused excess piping. Relocation of heads shall be according to approved plan. Field installation approved set of plans shall require recalculation of the system, taking into account all new piping and fittings.
15. Where the equipment is to be installed as an addition to an existing system, enough of the existing system shall be indicated on the plans to make all conditions clear.
16. New fire sprinkler system calibration hydraulic flow labels must be installed showing required information at completion of all sprinkler system modifications.

B. Shop Drawings

1. Fire Protection Contractor shall sign and seal Shop Drawings prior to issuance to local fire authority for approval. No work shall be installed without approved Shop Drawings.
2. Obtain approval on systems in accordance with construction schedule with fire sprinkler head layout as schedule dictates.
3. Submit fire sprinkler system Shop Drawings and hydraulic calculations with the submittal of product data together.
4. Submit detailed layout Shop Drawings of complete sprinkler systems. Show Drawings shall indicate plan locations and elevations of piping and hangers, including bottom elevation of major piping and be coordinated with building conditions, ductwork and other mechanical and electrical services, location size and length of riser nipple or drop.

C. As-Built Drawings

1. Contractor shall provide Owner with a complete and accurate set of as-built drawings at completion of the project. These shall include, but not be limited to:
   a. Reflected ceiling plans at ⅛" = 1'0" scale showing sprinkler locations and sprinkler piping.
   b. Drawings shall be CAD-Generated in AutoCAD Release, most current version (with no third party software), shall be submitted in one (1) hard copy and two (2) on disk, and

DocuSign Envelope ID: 330DEBD6-9A9E-4F34-BDCC-1AC1BAA701E9

shall otherwise comply with reasonable standards established by S.B.M from time to time.

c. As-builts shall show new work as well as previous conditions that remain. Notation of any unique or special circumstances pertaining to construction shall be made.

d. Project close out shall include copies of all warranties, guarantees, operating and maintenance manuals delivered to Owner.

D. Written statement that coordination has been accomplished with work of other contractors and installers

1.5 QUALITY CONTROL

A. All welders shall be certified by ANSI B31.1.0-1967—"Standard Qualification Welding Procedures, Welders and Welding Operators." Furnish welder performance qualification test certificates for positions 2G and 5G made in strict compliance with the above codes. Welders shall be certified for the type of pipe materials specified herein. All costs incident to procedures and welder's qualification tests shall be assumed by this Contractor. Two (2) copies of the qualification test report and certification with welder's identification number, letter, etc., shall be delivered to the Project Representative for his file before any welding commences. Each weld shall bear the welder's identification mark permanently indented in the weld. Welding procedures shall also be in accordance with the requirements of the American Welding Society, current edition where applicable.

B. Only Subcontractors and workmen experienced and regularly engaged in the installation of automatic sprinkler type fire protection systems for the past five (5) years and licensed as required by the Authority having jurisdiction shall be permitted to install the system.

PART 2 - PRODUCTS

2.1 ACCEPTABLE MANUFACTURERS

A. Following is a list of manufacturers whose products may be submitted for review. All items submitted as being equal to that specified, shall have same quality, finish, material construction, etc., as those specified under base Specification.

B. Acceptable Manufacturers:

1. Valves: Jenkins, Kennedy, Walworth, Crane, CLA-Val, Nibco, Milwaukee, Victaulic
2. Sprinkler Heads: Viking, Grinnell, Central, Reliable

2.2 PIPING AND FITTING MATERIALS

A. General Characteristics for Threaded Pipe and Fittings: Field Pipe Threading: Comply with ASME B1.20.1 "Pipe Threads, General Purpose (inch)".

B. General Characteristics for Welded Pipe and Fittings: Welding: Shop Welded and in compliance with AWS B2.1 "Specifications for Qualifications of Welding Procedures and Welders for Piping and Tubing".

C. Automatic Fire Sprinkler Systems:

1. Above Grade Piping Systems Pipe Sizes 2 inch and Smaller: Piping: ASTM A135, or A53B, Schedule 40 carbon steel pipe.
2. Above Grade Piping Systems Pipe Sizes 2½ inches and Larger: Piping: ASTM A135 or A53B, Schedule 10 carbon steel pipe.
3. Fittings:
   a. Pipe Sizes 2 inch and Smaller:
      1) Class 125 cast iron threaded fittings for working pressures under 175 pounds per square inch, conforming to ANSI B16.4.
      2) Class 150 malleable iron threaded fittings for working pressures under 300 pounds per square inch, conforming to ANSI B16.3.
      3) Class 250 cast iron threaded fittings for working pressures up to 400 pounds per square inch, ANSI B16.4

DocuSign Envelope ID: 330DEBD6-9A9E-4F34-BDCC-1AC1BAA701E9

4) Class 300 malleable iron threaded fittings for working pressures greater than 175 pounds per square inch up to 800 pounds per square inch, conforming to ANSI B16.3.

b. Pipe Sizes 2½ inch and Larger: ASTM B16.9, B16.25 welded fittings, cast iron flanges, and vee-butt welded joints.

c. Pipe Sizes 1½ inch and Larger:

1) Various Victaulic "Firelock" fittings/couplings may be acceptable, however mechanical T-fittings 920, 921, Hooker fittings, etc. will not be permitted. Contractor to submit list of fittings he intends to use and in which systems.

4. Grooveless clamp or saddle fittings are not acceptable.

2.3 VALVES

A. All fire protection valves shall be Underwriters Laboratories label, Factory Mutual approved and to be rated of minimum 175 psi working pressure rating or where line pressure exceeds 175 psi, extra heavy. Shut off valves shall be of the indicating type. Where pressure exceeds 175 pounds per square inch, extra heavy rated valves shall be provided.

B. Floor Control, Riser and Isolation valves:

1. 175 psig Working Pressure:

a. Gate Valves:

1) Gate valves up to and including 2 inch Kennedy Figure 66, 175 psig cold water, UL listed, bronze body, bronze trim, single disc, outside screw and yoke, screwed bonnet valves with seats of bronze, threaded ends.

2) Gate valves 2½ inch through 12 inch Kennedy Figure 4068, 175 psig cold water, UL listed, and approved iron body, outside screw and yoke bolted bonnet valves with double or single disc, Class 125 ANSI B16.1 flanged ends, bronze trim, bronze seats.

b. Butterfly Valves:

1) 2½ inch through 8 inch UL listed for specification 1091, under Approval Standard 1112, ductile iron body conforming to ASTM A536 coated with polyphenylene sulfide blend, ductile iron disc conforming to ASTM A536 with EPDM coating providing bubble tight shut-off, approved weatherproof manual actuator suitable for indoor or outdoor use with two single pole, double throw supervisory switches either pre-wired (WRD) or unwired (UWD) monitoring the open position as required to meet design requirements, grooved ends for installation with grooved mechanical couplings and rated for service up to 175 psi (1200 kPa) working pressure, equivalent to Victaulic Series 708-W, Gruvlok 7722-3 FD, or Nibco GD4765-4N.

2) UL listed, slow-open quarter turn valve with built in tamper switches, 175 psi, threaded ends. Valve shall be provided with tamper switches rated for 0.5 Amps, 28 VDC; equivalent to "No. BB-SCS02" by Milwaukee Valve.

C. Check Valves:

1. 175 psig Working Pressure:

a. Check Valve – 2½ inch and larger: Iron body, swing check, 175 psi working pressure, bronze mounted, flanged pattern, UL listed; equivalent to "Fig. F-908-W" by Nibco.

b. Check Valve – 4 inch and larger: Iron body, swing check, 175 psi working pressure, bronze mounted, flanged pattern, UL listed; equivalent to "Fig. F-908-W" by Nibco.

D. Fire Hose Valve: Existing to remain.

2.4 FIRE DEPARTMENT CONNECTION

Existing to remain.

2.5 VALVES SUPERVISORY SWITCH

A. Provide UL listed, supervisory switches with two single pole, double throw micro switches on all valves with alarm signal to register on fire alarm panel on all control valves. PIV switches shall be

DocuSign Envelope ID: 330DEBD6-9A9E-4F34-BDCC-1AC1BAA701E9

weather-resistant and shall monitor target position. Acceptable Manufacturers: Potter Electric Signal or approved equal.

1. Valve Supervisory Switches: 2 sets of single pole double throw Form C synchronized sets of contacts rated at 15A, 125/250 VAC and 2.5 A, 0-30 VDC, located within tamper resistant NEMA 6P enclosure with electrical. Plug type switches will not be acceptable.
    a. OS&Y Gate Valve Supervisory Switch: “Model OSYSU-2” by Potter Electric Signal Manufacturing. OS&Y switches shall monitor stem movement and shall be complete with mounting J-bolts.
    b. Butterfly: “Model PCVS-2T” by Potter Electric Signal Manufacturing or equal.

B. Plug and loop type tamper switches shall not be used.

C. All wiring shall be provided under Division 26.

2.6 SPRINKLER HEADS

A. General:

1. All sprinkler heads shall be installed in ceilings of all areas throughout the space.
2. Fire sprinklers shall match existing base building sprinkler model and shall be of the same characteristic, including orifice size, thermal response and water distribution.
3. Prive sprinkler heads with ½ inch discharge orifice.
4. All materials installed shall adhere to the manufacturer’s installation guidelines.
5. Sprinkler escutcheon plates must be part of a listed sprinkler assembly.
6. Ceiling Areas: to match existing base building sprinkler model.
    a. Ceiling Areas: Viking, Horizon, Mirage, Quick Response, Standard Coverage, Concealed VK 462, ½” NPT, K5.6, 165°F cover plate: custom color: subject to Architect’s approval. UL listed and FM approved.
    b. Open Ceiling Areas: Viking, Microfast, Quick Response Upright Sprinkler, VK 300, 12” NPT, K5.6, 155°F, Final finish: chrome.
    c. Viking Microfast Model M, quick response, standard coverage, pendent VK302, ½” NPT, K5.6, 155°F, 175 psi rated of working pressure. Escutcheon plate is to be factory painted white enamel unless otherwise approved by Owner.
    d. Server Room: Viking, Quick Response, Standard Coverage, Horizontal Sidewall Microsoft VK305, ½” NPT, K5.6, 175°F, 175 psi rated maximum working pressure,. Final Finish: Chrome.
    e. All sprinkler final finished are subject to architect’s review and approval prior to installation.
7. Standard response sprinklers can be used for modifications or additions to existing light hazard systems equipped with standard response sprinklers.
8. If existing sprinklers are quick-response type, all new additional sprinklers shall be of the quick-response type. Where quick-response sprinklers are installed, all sprinklers within a compartment shall be of the quick-response type.
9. Provide proper wrenches to service specified sprinkler heads.
    a. A minimum of two sprinklers of each type and temperature rating will be provided to the building engineer, including the appropriate wrench(es) (2013 NFPA 13, Section 6.2.9 “Stock of Spare Sprinklers”).

2.7 WATERFLOW DETECTORS: EXISTING TO REMAIN.

A. Flow Switches: Vane type, UL listed, water flow detectors in the sprinkler systems where shown on the Drawings or as indicated in these Specifications. Detectors shall be designed for mounting in the horizontal or vertical piping, but shall not be mounted in a fitting or within 12 inches of any fitting that changes direction of water flow, and shall have sensitivity setting to signal any flow of water that equals or exceeds the discharge from one sprinkler head. Switches shall be activated by a vane extending into the waterway of the piping. Detectors shall provide a ½ inch conduit entrance.

1. Required whole sizes shall be $1^{5}/_{16}$ inches for piping 2 inches to 3 inches and $2^{1}/_{16}$ inches for piping 4 through 8-inch size.

DocuSign Envelope ID: 330DEBD6-9A9E-4F34-BDCC-1AC1BAA701E9

2. Flow Switch: UL listed, rated for 450 psi and surges up to 18 FPS, alarm activation at 10 gpm, sets of single pole double throw Form C synchronized sets of contacts rated at 15 A, 125 VAC and 2A, 24 VDC; corrosion-resistant using factory-installed, non-corrosive insert.
   a. Switch Enclosure: Tamper resistant, meeting NFPA 4 rating, and equipped with instantly recycling adjustable retard with 0-90 second range.
   b. Equivalent to “Model VSR-F“ by Potter Electric Signal Manufacturing.

B. Pressure Switches: UL listed, rated for 250 psi and detect 10 psi pressure increase or decrease from normal line pressure, adjustable from 10 to 175 psi, 2 sets of single pole double throw Form C synchronized sets of contacts rated at 15 A, 125 VAC and 2A, 24 VDC; corrosion-resistant using factory-installed, non-corrosive insert, bleed valve assembly; equivalent to “Model PS40-2A-BVL” by Potter Electric Signal Manufacturing.

C. All electrical wiring shall be provided under another Division of the Specifications.

D. Coordinate all requirements with Division 26.

2.8 DRAINS AND TEST PIPES

A. Fire Sprinkler Zone Valve Assembly: Existing to remain.

2.9 PIPE SLEEVES

A. The Contractor shall furnish and install all sleeves required for the lines and mains as needed for sprinkler piping.

2.10 HANGERS, ANCHORS, SUPPORTS AND SWAY BRACING

A. Modification to existing system will require seismic upgrades to all exposed and accessible portions within the work area. These upgrades shall be to the current 2013 NFPA 13 and the 2013 CBC.

B. Hangers, bracing, and restraint of system piping shall be installed per 2013 NFPA 13, Chapter 9 and “Protection of Piping Against Damage Where Subject to Earthquake” (2013 NFPA 13, Section 9.3) and 2013 CBC, Chapter 16 “Structural Design”, Section 1613 “Earthquake Loads”, Subsections 1613.1 “Scope”, 1613.4 “Alternates to ASCE 7”.

C. End-of-line restraints shall be provided for end sprinkler on each branch line, except as allowed in Section 9.3.6.5 of the 2013 NFPA 13.

D. All piping shall be securely supported from the building structure by means of Underwriters approved iron hangers, supports and pipe inserts and installed in accordance with Underwriters approved methods, in accordance with 2013 NFPA 13 and 2013 CBC.

E. All horizontal piping shall be supported by means of approved wrought iron clevis type hangers with proper size suspension rods and locknuts, spaced as required by the Underwriters, 2013 NFPA 13 and 2013 CBC.

F. Supports for vertical piping shall be heavy black iron extension clamps with bolts, each end resting on the building structure or hung from the slab in an approved manner.

G. Provide all auxiliary steel required for pipe supports.

H. Piping shall be hung from structural slab by means of malleable iron concrete inserts set informs before concrete is poured. Drilled type concrete inserts may be provided.

I. Powder-driven studs are not permitted to be used for hanging sprinkler pipe. Powder-driven studs are not permitted to be used for sway bracing. Existing powder-driven studs will be allowed to remain unless the pipe is being moved or altered, or the hanger is not holding properly.

J. Piping shall not be hung from ductwork, or the work of other trades.

K. No pipes or other apparatus shall be installed so as to interfere in any way with the full swing of doors, building access doors, and access doors in ductwork. The arrangement, positions, and connections of pipes, drains, valves, etc., shown on the Drawings shall be taken as a close approximation and while they shall be followed as closely as possible, the right is reserved by the Project Representative to change the locations to accommodate any conditions which may arise

DocuSign Envelope ID: 330DEBD6-9A9E-4F34-BDCC-1AC1BAA701E9

during the progress of the work without additional compensation to this Contractor for such changes, provided that the changes are requested prior to the installation of this Contractor's work.

L. Piping typically shall be installed concealed in or above building construction; i.e.; hung ceilings, and shall be so arranged that relocation of lighting fixtures, or plumbing and mechanical systems, will not cause any interference.

M. All screwed pipe throughout the job shall be reamed smooth before being installed. Pipe shall not be split, bent, flattened or otherwise injured either before or during the installation. The Architect reserves the right to reject any and all work not in accordance with the review Shop Drawings.

N. Provide in accordance with referenced standards. Do not mix piping material and hanger material of dissimilar metals. All beam clamps shall be fitted with steel retainer straps. Hanger rods of less than ⅜ inch diameter are not permitted. All horizontal piping shall be supported by means of UL approved clevis type hangers with proper size suspension rods and locknuts, spaced as required by the Underwriters.

O. New Hanger "C" clamps are not allowed. Upgrade existing "C" clamps with new retaining straps.

P. Bending of threaded hanger rod is not allowed.

Q. Seismic sway bracing and hangers, sleeves, braces; methods of securing sprinklers: Contractor shall provide type, manufacturer, size, and figure # for hanger components, including maximum size pipe hanger can support; fastener type, manufacturer, size, length, minimum embedment depth, ceiling/ beam information (type, material, size) fastener is attached to.

R. Calculations of loads for sway bracing, included details shall be provided.

2.11 SPARE SPRINKLER HEADS

A. In addition to the heads actually required, furnish a stock of extra sprinklers of amounts as recommended by the National Fire Protection Associations Standards, including a minimum of six (6) heads of each type and temperature rating used and two (2) suitable wrenches for each type sprinkler head, contained in steel boxes, suitable for use as a service kit on the project.

B. Pressure Gauge Accessories
   1. Gauge Cock: ¼ N.P.T. brass ball valve with lever handle, equivalent to "LC -14 or LCU-14" by Weiss.

C. Ball Drip Valve: ¾ inch cast brass, straight or angle as required: equivalent to "No. 6781 or 6783" by Croker.

D. Escutcheon Plates: Escutcheon Plates shall be pressed stainless steel, chrome plated with concealed hinges and springs to hold position on pipe. Install on pipes passing through floors, ceiling and walls in finished areas. Wall plates exposed to weather shall be stainless steel. Escutcheon wall plates exposed to weather shall be stainless steel.

E. Sprinkler guards: UL listed, Heavy duty welded wire, red baked enamel finish.

2.12 SOFFITS

A. Level Cover support system: Modular piping cover system for installation of metal piping system in existing construction, ASTM E84 – Standard Test Method for Surface Burning Characteristics of Building Materials UL Listed, "DecoShield M" manufactured by DecoShield® Systems, Deerfield Beach, Florida.

B. Cover Units: L-shaped and U-shaped cross-section units of flame retardant resin material, paintable finish.

C. Surface burning characteristics when tested in accordance With ASTM E84:
   1. Flame spread: 20
   2. Smoke developed: 250

D. Provide coupling fittings for joining units end-to-end and prefabricated inside and outside corner fittings and end caps.

DocuSign Envelope ID: 330DEBD6-9A9E-4F34-BDCC-1AC1BAA701E9

E. Provide sidewall sprinkler head housing accommodating NFPA 13 4-inch drop assembly requirements.

F. Provide mounting clips to secure covers to wall-ceiling.

G. Pipe Hangers for Copper and Steel Piping: Design and dimensions compatible with cover system; UL Listed.

H. Paint: Acrylic latex; color to match adjoining surfaces.

PART 3 - EXECUTION

3.1 INSTALLATION

A. All piping, valves, and other materials shall be installed according to the Local Authority rules and an inspection certificate furnished.

B. Sprinkler piping shall be installed and coordinated with the ductwork and other mechanical and electrical services in the ceiling cavities by the Contractor to provide the clearances for lighting fixtures as indicated on the Drawings. If any departures from the Drawings are necessary to comply with any NFPA requirements, or the authority having jurisdiction, such revisions and/or departures shall be detailed and submitted for approval. All such revisions shall be made and the sprinkler systems installed in accordance therewith, without additional cost to the Owner. Departures shall not be made without prior written approval by the Project Representative. The Drawings are schematic and do not indicate inferred details. This installation shall also meet the approval of the Local Fire Department.

C. The sprinkler heads shall be located as indicated on the Architectural reflected ceiling plans and coordinated with the lighting fixtures. Sprinkler head alignment is required in all areas. Sprinklers shall be provided with a temporary plastic cover when installed in plaster or drywall ceilings.

D. No pipes or other apparatus shall be installed so as to interfere in any way with the full swing of doors, building access doors, and access doors in ductwork. The arrangement, positions, and connections of pipes, drains, valves, etc., shown on the Drawings shall be taken as a close approximation and while they shall be followed as closely as possible.

E. The right is reserved by the Project Representative to change the locations to accommodate a change of conditions, which may arise during the progress of the work without additional compensation to this Contractor for such changes, provided that the changes are requested prior to the installation of this Contractor's work.

F. Piping typically shall be installed concealed in or above building construction; i.e.; hung ceilings, and shall be so arranged that relocation of lighting fixtures, or plumbing and mechanical systems, will not cause any interference.

G. All components of the fire protection system shall be in installed in accordance with the manufacturer's installation recommendations.

H. All sprinkler heads shall be installed in conformance with the UL listing criteria. Spacing of sprinkler heads shall be in conformance with the UL listing criteria for the applicable occupancy type.

I. The fire protection subcontractor shall coordinate the installation of pipes, hangers, valves, and all other items of the fire protection system with the work of all other trades so that all components will be installed to avoid conflicts, and provide for proper servicing and maintenance of mechanical and electrical equipment in ceiling plenums.

J. Sprinkler heads shall be installed on a true axis line of ½ inch plus or minus. At the completion of the installation, if any heads are found to exceed this tolerance, heads shall be removed and reinstalled by this Contractor, at no additional cost to the Project Representative.

K. The Project Representative reserves the right to reject any and all work not in accordance with the approved shop drawings

L. Components improperly installed shall be removed and/or relocated as directed by the Project Representative at no additional cost to the Owner. Refer to Section 99-230501 subsection titled "Contractor's Coordination Drawings" for additional requirements.

DocuSign Envelope ID: 330DEBD6-9A9E-4F34-BDCC-1AC1BAA701E9

M. All sprinkler piping shall be installed concealed in hung ceilings, including drywall ceilings and soffits unless noted otherwise and shall be arranged so that relocation of lighting fixtures shall not cause any interference.

N. Run all pipe straight and true. Springing or forcing piping into place will not be permitted. Install piping in such a manner as to prevent strain on the equipment.

O. Conceal piping in ceiling cavity where ceiling are provided. Exposed piping shall be installed as nearly as possible parallel to or at right angles to the column lines of the building.

P. All piping shall be carefully graded so as to eliminate traps and pockets. Where water traps cannot be avoided, provide drains in conformance with NFPA 13.

Q. Make all joints smooth and unobstructed inside. Ream all cut pipe ends to remove burrs. Remove all obstructions prior to fabrication.

R. Install a union or flanges at equipment connections and elsewhere as indicated.

S. Make welded joints on pipe runs with continuous welds, without backing rings, and with pipe ends beveled before fabrication. Gas cuts shall be true and free from burned metal. Before welding, surfaces shall be thoroughly cleaned. The piping shall be carefully aligned and no metal shall project within the pipe.

T. All threaded pipe throughout the job shall be reamed smooth before being installed. Use full pipe lengths; random lengths joined by couplings will not be accepted.

U. Pipe shall not be split, bent, flattened or otherwise damaged either before or during the installation.

V. All welded elbows shall be long radius type.

W. The Fire Protection Subcontractor utilizing a grooved piping system shall provide a letter of certification to the Project Representative stating that a project site training session of at least two (2) hours duration was conducted for this Project by the grooved fitting manufacturer for the Subcontractor's supervisory and installing personnel.

X. All piping that penetrates fire rated construction shall be firestopped in accordance with Section 3.06.

Y. All piping shall be of the sizes required by applicable codes, but not less than the sizes indicated on the Drawings.

Z. Install sprinkler piping and heads at minimum 24-inch distance from variable air volume box or DDC control.

3.2 FIRE SPRINKLER CONTROL ASSEMBLY

Existing to remain.

3.3 SUPERVISORY SWITCHES

Existing to remain.

3.4 VALVES

A. Fire Department Connections: Existing to remain.

3.5 SLEEVES AND ESCUTCHEONS

A. Sleeves: Provide sleeves for all pipes passing through slabs, concrete walls, and lath and plaster ceilings (except drop nipples for heads) and partitions. Sleeves shall extend three inches above floors and be flush with walls, ceilings, and partitions. In concrete construction, sleeves shall be set in forms prior to pour.

B. Clearance between sleeves and pipes shall be one-inch for pipes through 3½-inches, two-inch for pipe sizes 4-inches and greater, and three-inch for seismic joints.

C. Packing: For sleeves set in fire walls and floors, caulk space between pipe and sleeve with flexible fire-resistive packing compound to achieve rating at least equal to that of the wall or floor penetrated. Annular space between sleeves and piping shall be sealed with UL through-

DocuSign Envelope ID: 330DEBD6-9A9E-4F34-BDCC-1AC1BAA701E9

penetration systems #49 (concrete) or #147 (gypsum/stud). Sleeves in floors on grade or exterior walls below grade shall be packed with oakum between pipe and sleeve flush with top of sleeve for floors and with outer surface for walls. Sleeves at seismic joints shall not be packed unless associated with a fire rated wall, partition, floor or floor ceiling assembly.

D. Sleeve Material:
   1. In concrete slabs and walls: Schedule 40 black steel pipe.
   2. Sleeves through waterproof membranes: Sleeves set in walls and slabs may be either cast iron or steel and shall be provided with a flashing clamp device and corrosion-resistant clamping holes.

E. Escutcheons: Furnish and install escutcheons on all exposed pipes passing through walls, floors, ceilings, (except for sprinkler heads) and partitions.

3.6 DRAINS AND TEST PIPES

A. Provide drains at locations indicated or requiring for complete drainage of systems. Provide other drains, valves or plugs as indicated or required to meet NFPA 13 recommendations. Pipe drains to approved locations, where required.

B. Provide test pipes as indicated or required locations and piped to discharge at approved locations.

C. Provide all required accessories such funnels air gap fitting, pipe alignment brackets and supports.

3.7 EARTHQUAKE PROTECTION

A. Provide seismic protection for sprinkler and standpipe piping in strict accordance with 2013 NFPA 13, Section 9.3 “Protection of Piping Against Damage Where Subject to Earthquakes” and 2013 CBC, Chapter 16, “Structural Design”.

3.8 WATER SERVICES

Existing to remain.

3.9 HANGERS, RESTRAINTS AND SUPPORTS

A. All pipes throughout the building shall be thoroughly and substantially supported and restrained with UL listed hangers, restraints and support devices and installed in accordance with Underwriter’s approved methods.

B. Furnish and install any special hangers or supports that may be required due to any peculiarities of construction. The design, selection spacing, and application of horizontal pipe hangers, supports, restraints, anchors, and guides shall be in accordance with the applicable standards.

C. All vertical pipes 8-inch in diameter and smaller shall be supported at least every other floor with Grinnell Figure 261 or approved equal riser clamps.

D. Hanger rods, inserts, etc., shall be sized and installed as recommended by the manufacturer for the service intended. Hanger rods shall be cadmium plated or galvanized.

E. All horizontal piping shall be supported by means of approved wrought iron clevis type hangers with proper size suspension rods and locknuts, spaced as required by the Underwriters.

F. Retainer straps shall be used with all beam clamps.

G. Supports for vertical piping shall be heavy black iron extension clamps with bolts, each end resting on the building structure or hung from the slab in an approved manner.

H. Provide all auxiliary steel required for pipe supports.

I. Submit pipe hanger, restraints insert and support details for concrete floor construction to the Project Representative for review and approval. Piping shall be hung from structural slab by means of malleable iron concrete inserts set in place before concrete is poured. Drilled type concrete inserts may be provided as approved by structural engineer. Power driven studs shall not be accepted unless accepted by the Project Representative.

J. Piping shall not be hung from ductwork, or the work of other trades.

DocuSign Envelope ID: 330DEBD6-9A9E-4F34-BDCC-1AC1BAA701E9

3.10 FIRE PROTECTION DURING CONSTRUCTION

A. All work of this type must be approved and coordinated by the Building Chief Engineer. Access forms requesting such work must be submitted to the Building Office at least 24 hours in advance. Proper fire watch and/or supplementary fire suppression equipment is required for any hot work.

B. Closing and opening of the valves shall be done by the Building Engineer.

C. Throughout the period of construction, the portion of the fire protection system not under construction shall be maintained pressurized and ready for use.

D. Entire sprinkler system shall be restored to full operation at the end of each working day.

E. All sprinklers during construction shall be protected by orange protective coverings to prevent sprinkler head form damage or form being painted. Protective orange caps for all sprinklers shall come from the factory. Remove plastic protective covers after construction.

F. Keep all pipe and other openings plugged to prevent entry of foreign matter. Cover all equipment and apparatus to protect against dirt, water, chemical or mechanical damage before and during construction period. Restore to original condition all apparatus and equipment damaged prior to final acceptance, including restoration of damaged shop coats of paint.

G. The condition of all sprinklers must be confirmed after ceilings are installed and rooms and ceilings are painted.

H. Contractor is required to provide engineering logs of hourly fire watch inspections at the end of each work shift.

3.11 COORDINATION WITH EXISTING WORK

A. Move, adjust or modify any existing pipe or equipment in conflict with new work as necessary to allow installation of new work such as light fixtures, walls, ceiling, new equipment, etc.

3.12 EQUIPMENT ACCESS

A. Provide all necessary clearances during layout and installation of piping and sprinkler heads for unimpeded access to all equipment, new or existing. Coordinate with Building Engineer.

3.13 TESTING

A. General:

1. All inspections, examinations, and tests required by the authorities and/or agencies specified hereinbefore shall be arranged and paid for by this Fire Protection Subcontractor, as necessary to obtain complete and final acceptance of the system as installed. The certificates of inspection shall be in quadruplicate and shall be delivered to the Architect for distribution.

   Note: All hydrostatic tests shall be performed as required by the reference standards cited hereinbefore and the Authority Having Jurisdiction, except the testing period shall be not less than eight (8) hours.
2. Provide acceptance test consisting of hydrostatic tests of the fire protection piping system in accordance with NFPA Pamphlet No. 13 and No. 14, but at not less than 200 pounds pressure for two (2) hours, or at 50 pounds per square inch in excess of the maximum static pressure when the maximum static pressure is in excess of 150 pounds per square inch.
3. Provide a hydrostatic pre-test, same as acceptance hydrostatic tests indicated in the foregoing paragraph, for both above ground and underground piping, prior to calling for fire marshal acceptance test. Written confirmation of passed 100 percent pre-test shall be given to the inspector of record prior to calling for final acceptance test. All cost associated with delays caused by failure to complete 100 percent operational pre-test shall be borne by the contractor. A Contractor Material and Test Certificate shall be filled out on completion of pre-test.
4. Maintenance testing shall be performed in accordance with this code and Administrative Rules published by the chief. Where certified inspection, testing, or qualification of fire protection equipment is required by nationally recognized standards, laws, ordinances, or

DocuSign Envelope ID: 330DEBD6-9A9E-4F34-BDCC-1AC1BAA701E9

administrative rules, the chief shall require that the person, firm, or corporation performing such work have a certificate from the fire department.

B. Fire sprinkler systems: Test in accordance with 2013 edition NFPA 13.

C. Fire standpipe systems: Test in accordance with 2013 edition NFPA 14.

D. Thread Test: A test shall be made of the thread on the hose valves and fire department connections using a coupling from the Local Fire Department hose. The test shall be made in the presence of the Owner or the Project Representative.

E. Fire alarm devices and tamper switches: Test all alarm devices for proper operation and connection to central alarm system and BMS.

3.14 PERIODIC INSPECTION

A. After completion of the automatic sprinkler system and at the beginning of the warranty period the Automatic Sprinkler Subcontractor shall perform, without charge to the Owner, one (1) inspection of the sprinkler system during the warranty period. Inspection shall be as per the applicable NFPA No. 25, “Inspection, Testing, and Maintenance of Water-Based Fire Protection Systems”, plus the following maintenance to be performed during the course of the inspection:

1. Operation of all control valves.
2. Lubrication of operating stems of all interior valves.
3. Operation of electric alarms, supervisory panels, air compressors, alarm trip switches, flow switches, etc.
4. Lubrication of Fire Department hose connection inlet and fire hose valve threads.
5. The Standard Form of the National Fire Sprinkler Association, Inc., “Report of Inspection” (Sheets 1 and 2), shall be filled out in triplicate after each inspection and the copies sent to the Project Representative.

END OF SECTION

DocuSign Envelope ID: 330DEBD6-9A9E-4F34-BDCC-1AC1BAA701E9

SECTION 99-220501

PLUMBING GENERAL PROVISIONS

PART 1 - GENERAL

1.1 DESCRIPTION

A. The General and Supplementary Conditions and Parts 1 through 7 of the Special Previsions are a part of the requirements for the work under this Division of the Specification.

1.2 WORK INCLUDED

A. Provide labor and materials required to install, test and place into operation the plumbing systems as called for in the Contract Documents and according to applicable codes and regulations.

B. Provide labor, materials and accessories required to provide complete operating plumbing systems as described or which may be reasonably implied as essential for a complete operating system.

1.3 QUALITY ASSURANCE

A. Comply with current governing codes, ordinances and regulations of the Authority or Authorities Having Jurisdiction over any part of the work and secure all necessary permits. Comply with the regulations and requirements of the Owner's insurance underwriter.

B. Where codes or standards are referenced, the applicable portions apply.

C. Drawings, specifications, codes and standards are minimum requirements. Where requirements differ, apply the more stringent.

D. Should any change in drawings or specifications be required to comply with governing regulations, notify the Architect prior to submitting bid.

E. Execute work in strict accordance with the best practices of the trades in a thorough, substantial, skillful and well-executed manner by competent workers. Provide a competent, experienced full-time Superintendent who is authorized to make decisions on behalf of the Contractor.

F. The Architect or Architect's Representative may conduct unannounced field reviews of any work completed or in progress during the Contractor's working hours. A report will be issued to the Contractor if the field review of the plumbing systems construction has revealed elements of the work, which are inconsistent with the Contract Documents. All items in the report shall be addressed in writing by the Contractor within two (2) weeks and corrections in the field shall be made as directed.

1.4 ABBREVIATIONS AND DEFINITIONS

A. Abbreviations:

1. AABC American Association of Balancing Contractors
2. ABMA American Boiler Manufacturers Association
3. AFBMA Anti-Friction Bearing Manufacturers Association
4. AGA American Gas Association
5. ANSI American National Standards Institute
6. ASA Acoustical Society of America
7. ASHRAE American Society of Heating, Refrigeration, and Air Conditioning Engineers
8. ASME American Society of Mechanical Engineers
9. ASTM American Society for Testing and Materials
10. AWWA American Water Works Association
11. EPA Environmental Protection Agency
12. FM Factory Mutual
13. IEEE Institute of Electrical and Electronic Engineers
14. NEBB National Environmental Balancing Bureau
15. NEMA National Electrical Manufacturers Association
16. NFPA National Fire Protection Association

DocuSign Envelope ID: 330DEBD6-9A9E-4F34-BDCC-1AC1BAA701E9

17. OSHA Occupational Safety and Health Administration
18. UL Underwriters Laboratories Inc.

B. Definitions:
1. Where it is stated in the specifications to submit to Architect or Engineer for review, refer to Architectural General and Special Conditions for proper procedures.
2. "PROVIDE" means to "Furnish" and "Install".
3. "INSTALL" means to join, unite, fasten, link, attach, set up or otherwise connect together before testing and turning over to Owner, complete and ready for regular operation.
4. "FURNISH" means to supply all materials, labor, equipment, testing apparatus, controls, tests, accessories and all other items customarily required for the proper and complete application.
5. "AS DIRECTED" means as directed by the Architect, or the Architect's Representative.
6. "CONCEALED" means embedded in masonry or other construction, installed behind wall furring or within double partitions, or installed within hung ceilings.
7. "SUBMIT" means submit to the Architect for review.

1.5 GUARANTEE

A. Submit a single guarantee stating that the work is in accordance with Contract Documents. Guarantee work against faulty and improper material, fabrication, installation, start-up and commissioning for a period of one (1) year from date of final acceptance by the Owner, except that where guarantees or warranties for longer terms are specified herein, the longer term shall apply. Correct any deficiencies, which occur during the guarantee period, within 24 hours of notification, at no additional cost to the Owner, to the satisfaction of the Owner. Obtain similar guarantees from subcontractors, manufacturers, suppliers and sub-trade specialists.

1.6 USE OF THE ARCHITECT'S AND ENGINEER'S DRAWINGS

A. The Contractor shall obtain, at the Contractor's request, from the Architect or Engineer a set of AutoCAD or compatible format architectural and engineering drawings on electronic media where desired by the Contractor and/or required by the Specifications for use in preparing the shop drawings, coordination drawings, and record drawings. The Contractor shall provide to the Architect and Engineer a written release of liability acceptable to the Architect and Engineer prior to receiving the electronic media files.

PART 2 - PRODUCTS

2.1 EQUIPMENT AND MATERIALS

A. Provide products and materials that are new, clean, free of defects and free of damage and corrosion.

B. Products and materials shall not contain asbestos, PCBs or any other material that is considered hazardous by the Environmental Protection Agency or any other Authority Having Jurisdiction.

C. Replace materials of less than specified quality and relocate work incorrectly installed as directed by the Architect.

D. Statically and dynamically balance rotating equipment for minimum vibration and lowest operating noise level.

E. Provide name/data plates on major components of equipment with manufacturer's name, model number, serial number, capacity data and electrical characteristics attached in a conspicuous place.

F. Install materials and equipment with qualified trades people.

G. Maintain uniformity of manufacture for equipment used in similar applications and sizes.

H. Applicable equipment and materials to be listed by Underwriters Laboratories and manufactured in accordance with ASME, AWWA, or ANSI standards, and as approved by Authorities Having Jurisdiction. The energy-using products shall be certified for use in the State of California and meet State energy efficient standards.

DocuSign Envelope ID: 330DEBD6-9A9E-4F34-BDCC-1AC1BAA701E9

I. Fully lubricate equipment when installed.

J. Do not operate water systems until piping has been cleaned, disinfected and strainers are in place.

K. Install floor-mounted equipment on a 4-inch high concrete pad. Concrete work shall be provided by another trade. Coordinate size and location with actual equipment used and accepted layout shop drawings.

L. Secure equipment with bolts, washers and locknuts of ample size to support equipment. Embedded anchor bolts to have bottom plate and pipe sleeves. Grout machinery set in concrete under entire bearing surface. After grout has set, remove wedges, shims and jack bolts and fill space with grout.

M. Locate valves, traps, shock absorbers, dielectric unions, access doors, etc., to be easily accessible, either in mechanical spaces or through access panels specified. Obtain Architect's approval of access panel locations.

N. Follow manufacturers' recommendations and instructions for installing, connecting, and adjusting equipment. Provide a copy of such instructions at the equipment during installation.

O. Pressure vessels and relief valves shall be selected, built and labeled in accordance with ASME.

P. Equipment capabilities, etc., are scheduled or specified for job site operating conditions. Equipment sensitive to altitude shall be derated with the method of derating identified on shop drawings.

2.2 ALTERNATIVE EQUIPMENT AND MATERIALS

A. Contract Documents are based on materials specified and on equipment manufacturers indicated. Acceptance of alternative equipment manufacturers does not relieve Contractor of the responsibility to provide equipment and materials, which meet the quality and performance as stated or implied in the Contract Documents.

B. Equipment manufacturers listed in individual sections are acceptable for this project, subject to requirements of Contract Documents.

C. Submit proposals to supply alternate materials or equipment, in writing, with sufficient lead time for review prior to the date equipment must be ordered to maintain project schedule. Reimburse Owner for costs associated with the review of the proposed alternative whether alternative is accepted or rejected.

D. Include revisions required to adapt alternatives in such proposals, including revisions by other trades. No increase in the contract price will be considered to accommodate the use of alternative equipment.

E. Wherever quality standards (such as serviceability, longevity or durability) and operating results (such as noise levels, quantity delivered or pressure obtained) are specified or scheduled, or when the manufacturer and size of equipment, for which such operating results are published or determinable, is specified, the substitution being proposed must conform substantially to the quality and quantities specified or implied. The substitution must fit into available space conditions and must function properly in coordination with the rest of the system.

F. Proposed changes and substitutions of systems, equipment and manufacturers shall be submitted and include the following information with the proposal:
   1. A description of the difference between the existing contract requirements and that proposed, the comparative features of each, and the effect of the change on the end result performance. Include the impact of all changes on other contractors and acknowledge the inclusion of additional costs to other trades.
   2. Schematic drawings and details to supplement the description.
   3. A list of the contract requirements that must be revised if the change is accepted, including any specification revisions.
   4. Complete list of materials and equipment proposed for use in the change.

DocuSign Envelope ID: 330DEBD6-9A9E-4F34-BDCC-1AC1BAA701E9

5. Include a description and estimate of costs the Owner may incur in implementing the change, such as additional space requirements, permits, architectural and aesthetic impact, design costs, tests, permits evaluation, operating and support costs.
6. A projection of any effects the proposed change would have on collateral costs to the Owner.
7. A statement of the time by which a contract modification accepting the change must be issued, noting any effect on the contract completion time or the delivery schedule.
8. A statement indicating the reduction to the contract price if the Owner accepts the change. Be responsible for appropriate modifications to all trades.

PART 3 - EXECUTION

3.1 FEES

A. Pay all required fees and obtain required permits related to the plumbing installation.

B. Pay royalties or fees in connection with the use of patented devices and systems.

C. Provide controlled or witnessed inspection where required by Authorities Having Jurisdiction or by these specifications.

3.2 SUBMITTALS AND REVIEWS

A. Submit shop drawings, manufacturer's data, samples and test reports as specified.

B. Within two (2) months after notice to proceed by the Owner or Owner's Representative, or after execution of Owner/Contractor Agreement, submit a complete typed list of all plumbing equipment manufacturers and material suppliers for the equipment proposed to be provided on this project as well as names of all subcontractors.

C. Within three (3) months after notice to proceed by the Owner or Owner's Representative or after execution of Owner/Contractor Agreement, prepare an index of all submittals for the project. Include a submittal identification number, a cross-reference to the specification sections or drawing number, and an item description. Prefix the submittal identification number by the specification sections to which they apply. Indicate, on each submittal, the submittal identification number in addition to the other data specified. All subcontractors shall utilize the assigned submittal identification number.

D. After the Contract is awarded, obtain complete shop drawings, product data and samples from the manufacturers, suppliers, vendors, and all subcontractors, for all materials and equipment as specified. Submit data and details of such materials and equipment for review. Prior to submission, certify that the shop drawings, product data and samples are in compliance with the Contract Documents. Check all materials and equipment upon their arrival on the job site and verify their compliance with the Contract Documents. Modify any work, which proceeds prior to receiving accepted shop drawings as required to comply with the Contract Documents and the shop drawings.

E. Review of submittals is for general compliance with the design concept and Contract Documents. Comments or absence of comments does not relieve the Contractor from compliance with the Contract Documents. The Contractor remains solely responsible for details and accuracy, for confirming and correlating all quantities and dimensions, for selecting fabrication processes, for techniques of construction, for performing the work in a safe manner, and for coordinating the work with that of other trades.

F. No part of the work shall be ordered, procured, started in the shop or in the field until the shop drawings and samples for that portion of the work have been submitted, reviewed and returned with either "No Exceptions Noted" or "Exceptions Noted" marked on the submission.

G. A minimum period of ten (10) working days, exclusive of transmittal time, will be required in the Architect/Engineer's office each time a shop drawing, product data and/or samples are submitted for review. This time period must be considered by the Contractor in the scheduling of the work.

H. Submit two (2) bond prints of all items requiring shop drawings. Submit three (3) copies of manufacturer's product submittals organized by specification section number. Submittals not

DocuSign Envelope ID: 330DEBD6-9A9E-4F34-BDCC-1AC1BAA701E9

organized by specification will be returned without review. One (1) bond print or two (2) copies of submittals will be returned. Additional copies are the responsibility of the Contractor. Electronic media will not be reviewed.

I. Submissions will be stamped as follows:

Stamp	Interpretation
No Exceptions Noted	Fabrication, manufacture, or construction may proceed providing submittal complies with the Contract Documents.
Exceptions Noted: [ ] Resubmit for Record [ ] No Resubmission Required	Fabrication, manufacture, or construction may proceed providing submittal complies with the Contract Documents and Engineer's notations are complied with. Within this category are two options. A resubmission for our records is required when corrections are necessary. A resubmission is not required if there are only minor comments.
Revise and Resubmit	The submittal does not comply with the Contract Documents; do not proceed with fabrication, manufacture, or construction. The work and shop drawings are not permitted at the job site. Resubmit appropriate shop drawings.

J. Submit materials and equipment by manufacturer, trade name and model number. Include clear, legible copies of applicable brochure or catalog material. Maintenance and operating manuals are not suitable substitutes for shop drawings.

K. Identify each sheet of printed submittal pages (using arrows, underlining or circling) to show applicable sizes, types, model numbers, ratings, capacities and options actually being proposed. Cross out non-applicable information. Note specified features such as voltages, motor efficiencies, special tank linings, pump seals, materials or paint finishes. Cross out all references to "options". Cross out statements such as "subject to change without notice" or "not for construction". Anything not specifically excluded is assumed to be included.

L. Include dimensional data for roughing in and installation, technical data sufficient to verify that equipment meets requirements of the Contract Documents. Include wiring, piping and service connection data, motor sizes complete with voltage ratings, and schedules.

M. Maintain a complete set of the most current reviewed and stamped shop drawings and product data on site.

N. Prepare and submit detailed shop drawings for piping work and other distribution services in minimum ¼-inch to 1-foot scale, including elevations and locations and sizes of openings in floor decks, walls and roofs.

O. The work described in shop drawing and product data submittals shall be carefully checked by all trades for clearances (including those required for code compliance, maintenance and servicing), field conditions, maintenance of architectural conditions and proper coordination with other trades on the job. Each submitted shop drawing to include a certification that related field conditions and requirements have been checked by all Contractors and Subcontractors and that conflicts do not exist.

P. The Contractor is not relieved of the responsibility for dimensions or errors that may be contained on submissions or for deviations from requirements in the Contract Documents. The noting of some errors but overlooking others does not grant the Contractor permission to proceed in error. Regardless of any information contained in the shop drawings, product data and samples, the Contract Documents govern the work and are neither waived nor superseded in any way by the review of shop drawings, product data and samples.

DocuSign Envelope ID: 330DEBD6-9A9E-4F34-BDCC-1AC1BAA701E9

Q. Inadequate or incomplete shop drawings, product data and/or samples will not be reviewed and will be returned to the Contractor for resubmittal.

R. Indicate the following in the lower right hand corner of each shop drawing, and on the front cover of each product data brochure: the submittal identification number; title of the sheet or brochure; name and location of the Project; names of the Architect, Engineer, Contractor, Subcontractor, Manufacturer, Supplier, and Vendor; the date of submittal; and the date of each correction, version and revision. Number all pages and drawings in product data brochures, test reports or submittals consecutively from beginning to end. Unless the above information is included, the submittal will be returned for resubmission. Resubmittals of shop drawings or product data or brochures shall include a cover letter summarizing the corrections made in response to the review comments.

3.3 COORDINATION OF WORK

A. The Contract Documents establish scope, materials and quality but are not detailed installation instructions. Drawings are diagrammatic.

B. The Contract Documents show the general arrangement of equipment, ductwork, piping and accessories. Follow these drawings as closely as the actual construction and the work of other trades will permit. Provide offsets, fittings, and accessories, which may be required but not shown on the Drawings. Investigate the site and review drawings of other trades to determine conditions affecting the work and provide such work and accessories as may be required to accommodate such conditions.

C. Certain products will be provided by other trades. Examine the Contract Documents to ascertain the requirements for installation of these products.

D. Carefully check space requirements with other trades to insure that material can be installed in the spaces allotted.

E. Wherever work interconnects with work of other trades, coordinate with other trades to insure that they have the information necessary so that they may properly install the necessary connections and equipment. Identify items (valves, etc.) requiring access in order that the ceiling and partition contractors can install access doors and panels in the correct locations.

F. Consult with other trades regarding equipment so that, wherever possible, motors, motor controls, pumps and valves are of the same manufacturer.

G. Furnish and set sleeves for passage of pipes, and conduits through structural masonry and concrete walls, roofs and floors and elsewhere as will be required for the proper protection of each pipe passing through building surfaces.

H. Install firestopping around all pipes, conduits, etc., which pass through rated walls, partitions and floors in strict accordance with the manufacturer's published approval listing and rating.

I. Provide detailed information on openings and holes required in structural elements and pre-cast panels or components for plumbing work.

J. Provide required structural or architectural supports and hangers for piping and equipment, designed so as not to exceed allowable loadings of structures.

K. Examine and compare the Contract Drawings and Specifications with the drawings and specifications of other trades, report any discrepancies between them to the Architect and obtain written instructions for changes necessary in the work. Install and coordinate the work in cooperation with other related trades. Before installation, make proper provisions to avoid interferences.

L. Wherever the work is of sufficient complexity, prepare additional detail drawings to scale to coordinate the work with the work of other trades. Detailed work shall be clearly identified on the Drawings as to the area to which it applies. Submit these drawings to the Architect for review. At completion include a set of these drawings with each set of record drawings.

M. Before commencing work, examine adjoining work on which this work is in any way dependent and report conditions that prevent performance of the work. Become thoroughly familiar with actual existing conditions to which connections must be made or which must be changed or altered.

DocuSign Envelope ID: 330DEBD6-9A9E-4F34-BDCC-1AC1BAA701E9

N. Adjust location of pipes, panels, equipment, etc., to accommodate the work to prevent interferences, both anticipated and encountered. Determine the exact route and location of each pipe prior to fabrication.
   1. Right-of-Way: Lines which pitch have right-of-way over those which do not pitch. For example: condensate, steam, and plumbing drains normally have right-of-way. Lines whose elevations cannot be changed have right-of-way over lines whose elevations can be changed.
   2. Provide offsets and changes in direction of pipes as required to maintain proper head room and pitch on sloping lines. Provide traps, air vents, drains, etc., as required to effect these offsets and changes in direction.

O. Install plumbing work to permit removal (without damage to other parts) boiler tube bundles, controls, sheaves and drives, and any other parts requiring periodic replacement or maintenance. Arrange pipes and equipment to permit access to valves, cocks, traps, starters, motors, and control components, and to clear the openings of swinging doors and access panels.

P. In cases of doubt as to the work intended, or in the event of need for explanation thereof, request supplementary instructions from the Architect.

3.4 CONTRACTOR'S COORDINATION DRAWINGS

A. The Contractor shall coordinate efforts of all trades and shall furnish (in writing, with copies to the Architect) any information necessary to permit the work of all trades to be installed satisfactorily and with the least possible interference or delay.

B. The Contractor and all trade contractors shall prepare a complete set of construction Coordination Drawings indicating the equipment actually purchased and the exact routing for all lines such as piping, busway, conduit, ductwork, etc., including conduit embedded in concrete floors and walls. The Coordination Drawings shall be submitted complete to the Architect and the Engineer within three (3) months after notice to proceed is given and in compliance with the construction schedule for the project. The sheet metal drawings, at a scale of not less than ¼-inch to 1-foot, shall serve as the base drawings to which all other Contractors shall add their work. Each separate Trade Contractor shall draw their work on separate layers with different color assignments to facilitate coordination. Each Coordination Drawing shall be completed and signed off by the other Trade Contractors and the Contractor prior to the installation of the HVAC, plumbing, electrical, fire protection and fire sprinkler work in the area covered by the specific drawing. The Contractor's work shall be installed according to the shop drawings and Coordination Drawings. If the Contractor allows one trade to install their work before coordination with the work of other trades, the Contractor shall make all necessary changes to correct the condition at no additional cost to the Owner.

C. The Contractor's Coordination Drawings shall indicate structural loads at support points for all piping 10-inch and larger, racked piping, racked conduit and busway. Submit to Structural Engineer for review and approval. The elevation, location, support points, static, dynamic and expansion forces and loads imposed on the structure at support and anchor points shall be indicated. All beam penetrations and slab penetrations shall be indicated and sized and shall be coordinated. Work routed underground or embedded in concrete shall be indicated by dimension to column and building lines and shall be coordinated. Coordination Drawings shall document all required structural penetrations for initial construction. Penetrations shall be dimensioned for walls, floors and roofs. These structural coordination requirements require review and approval by the Structural Engineer prior to completion and submittal of the Drawings.

D. This requirement for Coordination Drawings shall not be construed as authorization for the Contractor or trade contractors to make any unauthorized changes to the Contract Documents. Contract document space allocations shall be maintained such as ceiling height, designated clearance for future construction and flexibility, chase walls, equipment room size, unless prior written authorization is received from the Architect to change them.

E. Prior to final acceptance of the work, the Contractor shall submit the Coordination Drawings as part of the Record Drawing submittal.

DocuSign Envelope ID: 330DEBD6-9A9E-4F34-BDCC-1AC1BAA701E9

3.5 EXAMINATION OF SITE

A. The Contract Documents do not make representations regarding the character or extent of the subsoils, water levels, existing structural, mechanical and electrical installations, above or below ground, or other sub-surface conditions which may be encountered during the work.

B. Evaluate existing conditions that may affect methods or cost of performing the work, based on examination of the site or other information. Failure to examine the Drawings or other information does not relieve the Contractor of responsibility for satisfactory completion of the work.

3.6 EXCAVATION AND BACKFILL

A. Provide excavation for the work of this Division. Excavate all material encountered, to the depths indicated on the Drawings or as required. Remove excavated materials not required or suitable for backfill from the site. Provide grading as may be necessary to prevent surface water from flowing into trenches or other excavations. Remove any water that accumulates. Provide sheeting and shoring as may be necessary for the protection of the work and for the safety of personnel.

B. Provide trenches of widths necessary for the proper execution of the work. Grade bottom of the trenches accurately to provide uniform bearing and support the work on undisturbed soil at every point along its entire length. Except where rock is encountered, do not excavate below the depths indicated. Where rock excavations are required, excavate rock to a minimum overdepth of four inches below the trench depths indicated on the Drawings or as required. Backfill overdepths in the rock excavation and unauthorized overdepths with loose, granular, moist earth, thoroughly machine tamped to a compaction level of at least 95 percent of standard proctor density or 75 percent relative density or as specified by the Architect. Whenever unstable soil that is incapable of properly supporting the work is encountered in the bottom of the trench, remove soil to a depth required and backfill the trench to the proper grade with coarse sand, fine gravel or other suitable material.

C. Excavate trenches for utilities that will provide the required minimum depths of cover from existing grade or from indicated finished grade, whichever is lower, unless otherwise specifically shown.

D. Trenches shall not be placed within ten (10) feet of foundation or soil surfaces that must resist horizontal forces.

E. Do not backfill trenches until all required tests have been performed and the installation observed by the Architect. Comply with the requirements of other sections of the specifications. Backfill shall consist of non-expansive material with limited porosity. Deposit backfill in 6-inch thick layers and tamp carefully until the plumbing work is covered by not less than 12 inches of material. Backfill and tamp remainder of trench at 1-foot intervals until complete. Uniformly grade the finished surface.

3.7 CUTTING AND PATCHING

A. Where cutting, channeling, or drilling of floors, walls, partitions, ceilings or other surfaces is necessary for the proper installation, support or anchorage of piping or equipment, lay out the work carefully in advance. Repair any damage to the building, piping, equipment or finishes using skilled tradesmen for all required work.

B. Do not cut, channel or drill unfinished masonry, tile, etc. unless written permission is obtained from the Architect. Perform this work in a manner acceptable to the Architect.

C. Where piping or equipment are mounted on a painted finished surface, or a surface to be painted, paint to match the surface. Cold galvanize bare metal whenever support channels are cut.

D. Provide slots, chases, openings and recesses through floors, walls, ceilings and roofs as required. Where these openings are not provided, provide cutting and patching to accommodate penetrations at no additional cost to the Owner.

3.8 PROHIBITED LABELS AND IDENTIFICATIONS

A. Prohibited Markings: In all public areas, tenant areas, storage areas and similar locations within the project, the inclusion or installation of any equipment, fixture or assembly which bears on any

DocuSign Envelope ID: 330DEBD6-9A9E-4F34-BDCC-1AC1BAA701E9

exposed surface any name, trademark, or other insignia which is intended to identify the manufacturer, the vendor, or other source(s) from which such object has been obtained, is prohibited.

B. Exception: Required Underwriters Laboratories labels shall not be removed nor shall identification specifically required under the various technical sections of the Specifications be removed.

3.9 EQUIPMENT PAD AND ANCHOR BOLTS

A. Provide concrete pads under all floor-mounted plumbing equipment. This includes electrical components, equipment mounted on legs and pipe support stands. Equipment pads shall conform to the shape of the piece of equipment it serves with a minimum 2-inch margin around the equipment and supports. Pads shall be a minimum of 4 inches high and made of a minimum 28-day, 2500-psi concrete reinforced with 6-inch by 6-inch 6/6-gauge welded wire mesh. Trowel tops and sides of pad to smooth finishes, equal to those of the floors, with all external corners bullnosed to a ¾-inch radius. Use shop drawings stamped “NO EXCEPTIONS NOTED” or “EXCEPTIONS NOTED” for dimensional guidance in sizing pads.

B. Provide galvanized anchor bolts for all equipment placed on concrete equipment pads, inertia blocks, or on concrete slabs. Verify bolts size, number and embed depth recommended by the manufacturer of the equipment with seismic calculations as specified, and locate by means of suitable templates.

C. Where equipment is mounted on gypsum board partitions, the mounting screws will pass through the gypsum board and be securely attached to the partition studs. As an alternative, the mounting screws may pass through the gypsum board and be securely attached to 6-inch square, 18-gauge galvanized metal backplates that are attached to the gypsum board with an approved non-flammable adhesive. Toggle bolts installed in gypsum board partitions are not acceptable.

3.10 DELIVERY, DRAYAGE AND HAULING

A. Include all drayage, hauling, hoisting, shoring and placement in the building of equipment specified and be responsible for the timely delivery and introduction of equipment to the project as required by the construction schedule. If any item of equipment is received prior to the time it is required, be responsible for its proper storage and protection until the time it is required. Pay for all costs of demurrage or storage.

B. If equipment is not delivered or installed at the project site in a timely manner as required by the project construction schedule, the Contractor shall be responsible for disassembly, re-assembly, manufacturer’s supervision, shoring, general construction modification, delays, overtime costs, etc., at no additional cost to the Owner.

3.11 EQUIPMENT AND MATERIAL PROTECTION

A. Protect the work, equipment and material of other trades from damage by work or workers of this trade, and correct damage caused without additional cost to the Owner.

B. The Contractor shall be responsible for all work, materials and equipment until finally inspected, tested and accepted. Protect work against theft, injury or damage; and carefully store material and equipment received on site that is not immediately installed. Close open ends of work with temporary covers or plugs during construction to prevent entry of dust, dirt, water or other obstructing material. Cover and protect equipment and materials from damage due to water, moisture, humidity, paint, spray-on fireproofing, construction debris, etc. Store equipment subject to moisture damage, such as insulation or electrical components in dry heated spaces.

C. Provide adequate means for fully protecting finished parts of the materials and equipment against damage from whatever cause during the progress of the work until final acceptance. Protect materials and equipment in storage and during construction in such a manner that no finished surfaces will be damaged or marred, and moving parts are kept clean and dry. Do not install damaged items; take immediate steps to obtain replacement or repair. Replace all wet or damp insulation.

DocuSign Envelope ID: 330DEBD6-9A9E-4F34-BDCC-1AC1BAA701E9

3.12 ELECTRICAL EQUIPMENT AND ELECTRICAL ROOM PRECAUTIONS

A. Do not install piping or equipment not included as part of the electrical work, in the following rooms: switchgear, transformer, generator, elevator equipment, telephone, fire command, security, dimmer or electrical equipment rooms.

B. Do not install piping, equipment above switchboards, disconnects, panelboards, dimmers, control panels, VFDs, motor control centers, individual motor controllers, electronics, etc. or the code required service space for these electrical devices.

3.13 EQUIPMENT GUARDS

A. Provide easily (without tools) removable expanded metal guards for all hot surfaces, belts, couplings, and other moving parts of machinery. Provide tachometer openings in the guards at least 2 inches in diameter, for all belt-driven, gear-driven or variable speed machinery. Comply with OSHA requirements for all equipment guards.

3.14 LUBRICATION

A. Provide means for lubricating all bearings and other machine parts. If a part requiring lubrication is concealed or inaccessible, extend a metallic lubrication tube with suitable fitting to an accessible location and identify it with permanent laminated plastic nameplates. Identify this location in the maintenance manual.

B. After installation, properly lubricate all parts requiring lubrication and keep them adequately lubricated with a lubricant recommended by the equipment manufacturer until Owner acceptance.

3.15 DATE OF COMPLETION AND TESTING OF PLUMBING SYSTEMS

A. Comply with the project construction schedule for the date of final performance and acceptance testing, and complete work sufficiently in advance of the Contract completion date to permit the execution of the testing prior to occupancy and the Contract closeout. Complete any adjustments and/or alterations that the final acceptance tests indicate as necessary for the proper functioning of all equipment prior to the completion date. See individual sections for extent of testing required.

B. Provide a detailed schedule of completion indicating when each system is to be completed and outlining when tests will be performed. Submit completion schedule for review within three (3) months after the notice to proceed by Owner or Owner's Representative has been given. Update this schedule periodically as the project progresses.

3.16 OPERATING INSTRUCTIONS AND OPERATOR TRAINING

A. Provide the services of factory-trained specialists to supervise the operation of all equipment and systems specified and train the Owner's operating and maintenance personnel for a three (3) day operating/instruction period. Operating instruction time is defined as straight time working hours and not including nights, weekends or travel time to and from the project. Refer to individual sections for additional training and instruction by manufacturer's trained specialists.

B. Notify the Owner in writing at least three (3) weeks before the operating/instruction period begins. Do not commence until the Owner has issued written acceptance of the starting time and schedule.

C. In addition to the operating/instruction period, organize and conduct a seminar to instruct the Owner's Representatives in the operation and general preventative maintenance of equipment and systems provided at the completion of the project.

D. Instruct Owner's operating personnel in proper starting sequences, operation, shutdown, and maintenance procedures, including normal and emergency procedures.

E. Make arrangements to give instructions by system and not by building areas.

F. Provide services of qualified personnel, including each sub-trade, each major equipment supplier to attend seminar and instruct on respective equipment or systems. Seminar shall be conducted by the Contractor and may be videotaped and attended by the Architect or Architect's Representative.

DocuSign Envelope ID: 330DEBD6-9A9E-4F34-BDCC-1AC1BAA701E9

G. Submit seminar agenda, schedule and list of representatives to the Owner for review thirty (30) days prior to seminar. Confirm attendance at seminar by written notification to participants.

H. At seminar, submit final copies of record drawings and operating and maintenance manuals to Owner.

I. Submit a written record of the seminar, complete with an attendance list to the Owner.

3.17 OPERATING AND MAINTENANCE MANUALS

A. Provide operating instructions and maintenance manuals for all equipment and materials furnished under this Division.

B. Submit three (3) final copies of operating and maintenance data books for review at least ten (10) weeks before the completion date. Provide 8.5-inch by 11-inch, expanding spine catalog binders bound with heavy red fabric, hot stamp lettering on front and spine identifying project name and Owner's name. Assemble data in a completely indexed volume or volumes and identify the size, model, and features indicated for each item.

C. Index the maintenance manual according to the following system:
   1. Tab – 1.0 Plumbing Systems: Title page identifying project, Owner, Contractor and Engineer with clear plastic protection cover.
   2. Tab – 1.1 List of Plumbing Drawings.
   3. Tab – 1.2 Description of Systems: Provide complete descriptions of the operating sequence for each system. Include detailed system description, with individual components described, and description of how components interface with others and to the complete system.
   4. Tab – 1.3 Operating Division: Provide information on locations of components, how to energize switches and controls, how components interface with other components, operation of controls including operational sequence, complete troubleshooting sequence, and failure and safeguards to indicate if equipment goes off-line.
   5. Tab – 1.4 Maintenance and Lubrication Division: Provide general maintenance and lubrication schedule for major components and include daily, weekly, monthly, quarterly, semiannual and yearly checks and tasks. Explain how to execute maintenance tasks required for typical equipment such as bearings, drives, motors and filters. Compile this information for equipment separate from shop drawings.
   6. Tab – 1.5 List of Equipment Suppliers and Contractors: Provide list of equipment suppliers and contractors, including street addresses, website addresses, fax and toll-free telephone numbers.
   7. Tab – Certification (2.0, 2.1, etc.): Include copy of test data on disinfection, chlorination and flushing of systems, analysis of water quality taken at time system was put into operation, hydrostatic or air tests performed on piping systems, equipment alignment certifications, copy of balancing data for water systems, copy of valve identification and pipe color code and inspection approval certificates from Authorities Having Jurisdiction.
   8. Tab – Shop Drawings and Maintenance Bulletins (3.0, 3.1, 3.2, etc.): Provide material received in compliance with clause "Submittals and Reviews".

D. The manual divider and tabs shall be laminated mylar plastic and colored as follows:

Plumbing Systems	1.0	–	1.5	Orange
Certification	2.0	–	2.4	Green
Shop Drawings & Maintenance	3.0	–	3.17	Yellow

E. Plastic tabs with typewritten card insertions will not be accepted.

F. Maintenance information shall include complete lubrication, cleaning, and servicing data compiled in clearly and easily understandable format. Show model and serial number of each piece of equipment, complete lists of replacement parts, capacity ratings, and actual loads.

G. Provide the following equipment maintenance information where applicable:
   1. Identifying name and number
   2. Locations (where several similar items are used, provide a list)
   3. Complete nameplate data
   4. Parts list

DocuSign Envelope ID: 330DEBD6-9A9E-4F34-BDCC-1AC1BAA701E9

5. Performance curves and data
6. Wiring diagrams
7. Lubrication charts
8. Manufacturers' recommended operating and maintenance instructions, with all non-applicable information deleted
9. List of spare parts recommended for normal service requirements
10. Assembly and disassembly instructions with exploded view Drawings, where necessary
11. Trouble shooting diagnostic instructions, where applicable

3.18 RECORD DRAWINGS

A. The Contractor shall maintain on a daily basis at the project site a complete set of Record Drawings. The Record Drawings shall initially consist of a set of blueline prints or AutoCAD files of the Contractor's Coordination Drawings. The prints shall be marked or the AutoCAD files electronically updated to show the precise location of all buried or concealed work and equipment, including embedded piping and valves, and all changes and deviations in the plumbing work from that shown on the Contract Documents. This requirement shall not be construed as authorization for the Contractor to make changes in the layout or work without definite written instructions from the Architect or Engineer. The updated Coordination Drawings shall be used to produce the final Record Drawings that shall be delivered to the Owner on electronic media upon project completion.

B. Record dimensions clearly and accurately to delineate the work as installed. Suitably identify locations of all equipment by at least two (2) dimensions to permanent structures.

C. The Contractor and subcontractor shall mark all in-progress Record Drawings on the front lower right hand corner with a rubber stamp impression or an AutoCAD image similar to the following:

RECORD DRAWING
(⅜-inch high letters)

To be used for recording Field Deviations
and Dimensional Data Only
($^5/_{16}$-inch high letters)

D. Upon completion of the work, the Contractor and subcontractors shall certify all Record Drawings on the front lower right hand corner adjacent to the above marking with a rubber stamp impression or an AutoCAD image similar to the following:

RECORD DRAWING
CERTIFIED CORRECT
(⅜-inch high letters)

(Printed Name of General Contractor)
($^5/_{16}$-inch high letters)

Date:

(Printed Name of Subcontractor)
($^5/_{16}$-inch high letters)

Date:

E. Prior to final acceptance of the work of this Division, the Contractor shall submit properly certified Record Drawings to the Architect and Engineer for review and shall make changes, corrections, or additions as the Architect and/or Engineer may require to the Record Drawings. After the

DocuSign Envelope ID: 330DEBD6-9A9E-4F34-BDCC-1AC1BAA701E9

Architect's and Engineer's review, and any required Contractor revisions, the Record Drawings shall be delivered to the Owner on electronic media. The Architect and Engineer do not assume any responsibility for the accuracy or completeness of the Record Drawings.

3.19 CERTIFICATION

A. Any certifications required by the Specifications, in addition to those required for shop drawings, product data, equipment and other items, are to be so certified in writing by the Owner, a Partner, or a Corporate Officer of the firm required to provide the Certification, or by another person duly authorized to sign binding agreements for and on behalf of the Owner, Partner or Corporation.

3.20 FINAL REVIEW

A. At a time designated by the Owner, the entire system shall be reviewed for compliance with the Contract Drawings and Specifications. Be available at all times during this review.

B. Demonstrate to the Owner and/or the Architect's personnel prior to the Final Review that systems and equipment have been properly balanced and adjusted and are in compliance with the requirements of the Contract Documents. After these demonstration tests are satisfactorily completed, but prior to the Final Review, submit a written certification that: 1) attests to the Contract Document compliance for this project; and 2) certifies that the equipment and materials installed in this project contain no lead, asbestos or PCB. Prior to the final review, the Contractor shall confirm the following items regarding the status of key elements of the work. Negative responses to any of the items indicate that the construction is not substantially complete, and the building is not ready for a final review. The Contractor shall confirm the following in writing:

1. Building has normal electrical power.
2. The emergency or stand-by power system has been started up, commissioned, and is standing by.
3. Building systems have been cleaned.
4. Seismic restraints have been inspected as specified. Any required special inspections have been completed.
5. Building systems have been balanced and copy of balance report submitted to the Architect.
6. Building fire and life safety systems have been tested and accepted by the local authorities. Any required special inspections have been completed.
7. All final wiring connections have been rechecked.
8. All base building lighting systems are completely installed and operating.
9. The domestic cold water system has been installed, flushed, disinfected, tested and operating.
10. The domestic hot water systems are completely installed, flushed, disinfected, tested and operating.
11. The sanitary sewer and storm sewer systems are completely installed, operating, connected to the required city, public or private utilities and pressure tested.
12. There are no deviations or non-compliance with the Contract Documents; otherwise, provide a detailed account of any and all deviations or non-compliance.
13. All items on field review reports have been responded to in writing and are resolved to the satisfaction of the Owner.
14. All outstanding items on submittals and shop drawings have been addressed in writing and are resolved to the satisfaction of the Owner.
15. Schedule the final review only after providing written confirmation of all items above. Provide a minimum of ten (10) days notice.

C. Certificates and Documents required by the Contract shall be presented to the Architect at least two (2) weeks prior to the Final Review.

D. After the Final Review, any changes or corrections noted as necessary for the work to comply with the Contract Documents shall be accomplished without delay in order to secure final acceptance of the work.

END OF SECTION

DocuSign Envelope ID: 330DEBD6-9A9E-4F34-BDCC-1AC1BAA701E9

SECTION 99-220516

EXPANSION COMPENSATION FOR PLUMBING

PART 1 - GENERAL

1.1 WORK INCLUDED

A. The work of this Section shall include, but is not limited to, the following:
   1. Expansion loops and flexible expansion loops
   2. Expansion compensators
   3. Pipe alignment guides and anchors
   4. Expansion joints

1.2 RELATED DOCUMENTS

A. Section 99-220501 – Plumbing General Provisions

B. Section 99-220529 – Hangers and Supports for Plumbing Piping and Equipment

C. Section 99-220548 – Vibration Isolation and Seismic Restraints for Plumbing

1.3 REFERENCE STANDARDS

Published specifications standards, tests or recommended methods of trade, industry or governmental organizations apply to work in this Section where cited below:

A. AGA – American Gas Association

B. ANSI – American National Standards Institute
   1. ANSI Z223.1 – 2009: National Fuel Gas Code

C. ASME – American Society of Mechanical Engineers
   1. ASME Standard for Boiler and Pressure Vessel Code – 2007
      a. ASME BPVC – I through XII
   2. ASME B18.10 – 2006: Track Bolts and Nuts
   3. ASME B31.9 – 2008: Building Services Piping

D. ASTM – American Society for Testing and Materials
   1. ASTM A53 / A53M – 2007: Standard Specification for Pipe, Steel, Black and Hot-Dipped, Zinc-Coated, Welded and Seamless
   2. ASTM A183 – 2003 Revised 2009: Standard Specification for Carbon Steel Track Bolts and Nuts
   3. ASTM B650 – 1995 Revised 2008: Standard Specification for Electrodeposited Engineering Chromium Coatings on Ferrous Substrates
   4. ASTM F844 – 2007: Standard Specification for Washers, Steel, Plain (Flat), Unhardened for General Use
   5. ASTM F1120 – 1987 Revised 2004: Standard Specification for Circular Metallic Bellows Type Expansion Joints for Piping Applications
   6. ASTM F1123 – 1987 Revised 2004: Standard Specification for Non-Metallic Expansion Joints

E. AWWA – American Water Works Association
   1. AWWA C153/A21.53 – 2006: Ductile-Iron Compact Fittings for Water Service
   2. AWWA C210 – 2008: Liquid-Epoxy Coating Systems for the Interior and Exterior of Steel Water Pipelines
   3. AWWA C213 – 2007: Fusion-Bonded Epoxy Coating for the Interior and Exterior of Steel Water Pipelines

F. NFPA – National Fire Protection Association
   1. NFPA 99, Edition 05 – Standard for Health Care Facilities, with California amendments

G. NSF – National Sanitation Foundation
   1. NSF Standard 61, edition 08: Drinking Water System Components – Health Effects, with California amendments

DocuSign Envelope ID: 330DEBD6-9A9E-4F34-BDCC-1AC1BAA701E9

H. UL – Underwriters Laboratories Inc.

1.4 QUALITY ASSURANCE

A. Flexible expansion joints shall be AGA certified for use on gas piping.

1.5 SUBMITTALS

A. Product Data: For each type of expansion fitting indicated.

B. Shop Drawings: Signed and sealed by a qualified professional engineer.
   1. Design Calculations: For thermal expansion of piping systems and selection and design of expansion fittings and loops.
   2. Anchor Details: Detail fabrication of each indicated. Show dimensions and methods of assembly.
   3. Alignment Guide Details: Detail field assembly and anchorage.

C. Schedule: Indicate manufacturer's number, size, location, and features for each expansion fitting and loop.

PART 2 - PRODUCTS

2.1 ACCEPTABLE MANUFACTURERS

A. Flexible Expansion Loops: MetraFlex, Hyspan

B. Flexible Expansion Joints, Buried: Double ball configuration, “Flex-Tend” as manufactured by EBAA Iron, Inc., or equal (no known equal)

C. Expansion Compensator: MetraFlex Model HP, Flexonics Model H or HP, Hyspan Series 8540 up to 4-inch pipe size

D. Pipe Alignment Guides: Pipe Shields Series E2000 for insulated pipes; B-Line, Grinnell, Hyspan Series 9500 or MetraFlex for uninsulated pipes

E. Expansion Joints:
   1. Flexible Hose: Flexicraft, MetraFlex
   2. Flexible Ball: Advanced Thermal, Hyspan
   3. Metal-Bellows: Adsco, Anamet, Badger, Hyspan, MetraFlex, Proco

2.2 PERFORMANCE REQUIREMENTS

A. Expansion compensator shall be capable of elongating and compressing to absorb 200 percent of maximum piping expansion between anchors.

B. Pipe alignment guides shall be selected for both upward and downward motion.

2.3 FLEXIBLE EXPANSION LOOPS

A. Provide flexible expansion loops of size and material noted on the Drawings.

B. Flexible loops shall be designed to not impart thrust loads on the anchors. The loop shall consist of two flexible sections of hose and braid, two (2) 90-degree elbows, and a 180-degree return. Loops shall be installed in a neutral, pre-compressed, or pre-extended condition as required for application.

C. Loops installed hanging down shall have a drain plug. Loops installed straight up may be fitted with an automatic air release valve that purges air from the high point of the loop. Loops installed in any position other than hanging down must have the 180-degree return supported. Loops for drainage piping must be installed hanging down and be provided with a full-size cleanout Tee at bottom of loop.

D. Joints for copper piping and fittings with solder-joint end connections:
   1. 2-inch and smaller: Bronze hoses and single-braid bronze sheaths with 340 psig at 450 degrees F minimum pressure ratings.

E. Joints for steel piping:
   1. End connections shall be threaded up to 2-inch and flanged for all other sizes.

DocuSign Envelope ID: 330DEBD6-9A9E-4F34-BDCC-1AC1BAA701E9

2. Joints, up to 2-inch: Stainless-steel hoses and single-braid, stainless-steel sheaths with 325 psig at 600 degrees F minimum pressure ratings.

2.4 EXPANSION COMPENSATORS

A. Constructed of two-ply stainless steel bellows with copper shrouds, and with copper solder joint fittings. Compensators shall be rated 175 psig minimum, with internal guides, anti-torque device, and removable end clip for positioning.

B. Provide internal guides for the full length of the bellows travel.

2.5 EXPANSION JOINTS

A. Flexible Ball Type:
   1. Carbon-steel assembly with asbestos-free composition packing, designed for 360-degree rotation and angular deflection.
   2. 250 psig at 400 degrees F minimum pressure rating; comply with ASME Boiler and Pressure Vessel Code: Section II, and ASME B31.9 for materials and design of pressure-containing parts and bolting.
   3. End connections shall be threaded up to 2-inch and flanged for all other sizes.
   4. Joints for 6-inch and smaller shall be 30-degree angular deflection minimum.

B. UL-Listed Seismic Type:
   1. All sprinkler and fire standpipe piping passing through or crossing building seismic joints shall contain a flexible expansion loop designed for seismic movement.
   2. Flexible loops shall impart no thrust loads to system support anchors or building structure. Loops shall be located at, or near, the building seismic joint.
   3. A vertical support hanger, located within 4 pipe diameters, shall be installed on each side of the flexible loop. Each hanger to be transversely and longitudinally braced per local codes. Seismic bracing shall not pass through building seismic joint and shall not connect or tie together different sides or parts of building structure.
   4. Flexible loops shall be capable of movement in the ±X, ±Y, ±Z planes. Movement requirements and location, relative to seismic separation, shall be confirmed by the structural design engineer.
   5. Flexible loops may be installed to accommodate thermal expansion, seismic movement, and building settlement.
   6. Flexible loop connections to sprinkler piping shall be installed, inspected, and tested in accordance with current NFPA 13 standards.
   7. Flexible loops shall consist of two flexible sections of hose and braid, two 90-degree elbows, and 180-degree return. Loops shall include a factory supplied, center support nut located at the bottom of the 180-degree return, and a drain/air release plug.
   8. Materials of construction and end fitting type shall be consistent with pipe material and equipment/pipe connection fittings.
   9. Flexible expansion/seismic loops to be Metraloop® Fireloop™ as manufactured by The MetraFlex Company, Chicago®, IL.

2.6 MISCELLANEOUS MATERIALS

A. Guides shall be steel, factory fabricated, with bolted two-section outer cylinder and base for alignment of piping and two-section guiding spider for bolting to pipe.

B. Bolts and Nuts: ASME B18.10 or ASTM A183, steel, hex head.

C. Washers: ASTM F844, steel, plain, flat washers.

D. Mechanical Fasteners: Insert-wedge-type stud with expansion plug anchor for use in hardened Portland cement concrete, and tension and shear capacities appropriate for application.

DocuSign Envelope ID: 330DEBD6-9A9E-4F34-BDCC-1AC1BAA701E9

PART 3 - EXECUTION

3.1 INSTALLATION

A. Provide at least two (2) guides each side of each expansion loop, compensator or joint. Size guide cylinder to allow the full insulation thickness to be carried through the guide with ample clearance and without restricting the free movement of the pipe. Size guide cylinder for sufficient length to contain the total movement of the spider. Rigidly anchor pipe guide to building structure.

B. Install expansion fittings according to manufacturer's written instructions in sizes matching pipe size in which they are installed. Align expansion fittings to avoid end-loading and torsional stress.

C. Provide expansion loops, compensators or joints as shown on the Drawings.

D. Provide minimum of three (3) elbow offsets on branch pipe connections into mains and at each riser takeoff to allow piping flexibility and expansion.

E. Install flexible loop within four (4) pipe diameters, both upstream and downstream, from a pipe guide or anchor.

3.2 EXPANSION COMPENSATOR OR JOINT INSTALLATION

A. The bellows element shall be protected from damage. Dents, scores, arc strikes, weld spatter, and other damage can cause the joint to fail. Damaged compensators or joints shall not be used.

B. Align joint flange and pipe flange holes. Do not try to compensate for flange or pipe misalignment by putting a torsional, compressive, extension, or offset loads on the expansion compensator or joint. Good practice requires that a mating flange in the piping system remain unwelded until the expansion compensator or joint has been bolted into position.

C. All anchors, guides, and supports must be installed according to manufacturer’s recommendations.

D. Unit lengths must not be altered during installation except for the application of cold pull.

E. Remove shipping restraints after installation, but before hydrotesting. Test pressure shall not exceed 1.5 times design pressure. Water free of halogens shall be used for hydrotesting.

F. If testing medium is significantly heavier than the product to be carried in the system, care must be taken to support the additional weight.

G. Paints containing low melting point metals or their compounds, particularly aluminum, lead or zinc, must not be allowed to come into contact with the bellows convolutions.

END OF SECTION

DocuSign Envelope ID: 330DEBD6-9A9E-4F34-BDCC-1AC1BAA701E9

SECTION 99-220529

HANGERS AND SUPPORTS FOR PLUMBING PIPING AND EQUIPMENT

PART 1 - GENERAL

1.1 WORK INCLUDED

A. The work of this Section shall include, but is not limited to, the following:
   1. Pipe and un-isolated equipment hangers, anchors and supports.
   2. Sleeves, escutcheons.
   3. Through-penetration firestopping in fire-rated construction and through-penetration smokestopping in smoke partitions, including methods and materials applied in penetrations and unprotected openings to limit spread of heat, fire, gasses and smoke.

1.2 RELATED DOCUMENTS

A. Section 99-220501 – Plumbing General Provisions

B. Section 99-220548 – Vibration Isolation and Seismic Restraints for Plumbing

1.3 REFERENCE STANDARDS

Published specifications standards, tests or recommended methods of trade, industry or governmental organizations apply to work in this Section where cited below:

A. ANSI – American National Standards Institute
   1. ANSI/ASME B31.1 – 2007 Revised 2008: Power Piping

B. ASME – American Society of Mechanical Engineers
   1. ASME B16.19 – 2007: Factory-Made Wrought Butt-Welding Fittings

C. ASTM – American Society for Testing and Materials
   1. ASTM A123 / A123M – 2009: Standard Specification for Zinc (Hot-Dip Galvanized) Coatings on Iron and Steel Products
   2. ASTM B695 – 2004: Standard Specification for Coatings of Zinc Mechanically Deposited on Iron and Steel
   3. ASTM C1107 / C1107M – 2008: Standard Specification for Packaged Dry, Hydraulic-Cement Grout (Nonshrink)
   4. ASTM E814 – 1996 Revised 2009: Standard Test Method for Fire Tests of Penetration Firestop Systems

D. ISO – International Organization for Standardization
   1. ISO 9001 – 2008: Quality Management System Requirements

E. MSS – Manufacturers Standardization Society of the Valve and Fittings Industry Inc.
   1. SP-58-2002: Pipe Hangers and Supports – Materials, Design and Manufacturer
   2. SP-69-2003: Pipe Hangers and Supports – Selection and Application
   3. SP-89-2003: Pipe Hangers and Supports – Fabrication and Installation Practices

F. UL – Underwriters Laboratories Inc.
   1. UL Standard 1479 – 2003 Revised 2008: Fire Tests of Through-Penetration Firestops
   2. UL Fire Resistance – 2009: Fire Resistance Directory set
      a. Through-penetration firestop devices (UL-XHCR)
      b. Fire resistance ratings (UL-BXUV)
      c. Through-penetration firestop systems (UL-XHEZ)
      d. Fill, void, or cavity material (UL-XHHW)
   3. UL Building Materials – 2009: Building Materials Directory
   4. UL Component Listing Test Criteria
   5. Warnock Hersey Mark (Certification of Building Products)

G. California Building Code, 2013 edition

DocuSign Envelope ID: 330DEBD6-9A9E-4F34-BDCC-1AC1BAA701E9

H. California Fire Code, 2013 edition

I. California Plumbing Code, 2013 edition

1.4 QUALITY ASSURANCE

A. Hangers and supports to be constructed and applied according to the following standards:
   1. Power Piping: ANSI/ASME B31.1.
   2. Firestopping materials shall have been tested to provide fire rating at least equal to that of the construction.
   3. Deliver products in original, unopened packaging with legible manufacturer's identification.
   4. Mechanical sleeve seals shall be manufactured in an ISO 9001:2008 certified facility.
   5. Submit written guarantee agreeing to repair or replace joint sealers which fail in joint adhesion, extrusion resistance, migration resistance, or general durability or appear to deteriorate in any other manner not clearly specified by submitted manufacturer's data as an inherent quality of the material for the exposure indicated. The guarantee period shall be one year from date of substantial completion.

1.5 SUBMITTALS

A. Include on piping shop drawings a layout of masonry and concrete floor and wall sleeve locations for pipes. Include elevations and sleeve sizes.

B. Submit product data on through-penetration firestop. Submittal data for firestopping systems shall include the UL System Numbers listed in the UL Building Materials Directory under which the material was tested in accordance with ASTM E814 (UL 1479) for use in a Through-Penetration Firestop System. Where there is a firestop application that has not been tested by UL, obtain from the manufacturer an engineered judgment that the proposed application of the firestop product is suitable. Submit the engineered judgment to the Authority Having Jurisdiction.
   1. Product Data: Manufacturer's specifications and technical data including detailed specification of construction and fabrication, manufacturer's installation instructions and details of each proposed assembly identifying intended products and applicable UL system number or UL classified devices.
   2. Shop Drawings: Indicate dimensions, description of materials and finishes, general construction, specific modifications, component connections, anchorage methods, hardware, and installation procedures, plus the following specific requirements:
      a. Manufacturer or manufacturer's representative shall provide qualified engineering judgments and drawings relating to non-standard applications as needed.

C. Submit details of hangers, anchors and supports for each pipe size and service, and individual pieces of equipment.

D. Submit written guarantee as per sub-Clause 1.4, A.5.

PART 2 - PRODUCTS

2.1 ACCEPTABLE MANUFACTURERS

A. Pipe Hangers: Anvil, Fee & Mason, Elcen, Tube-Turn, F&S, Pipe Shields, B-Line Kindorf, Michigan Hanger, Power Strut, Unistrut, or approved equal. Anvil figure numbers are listed below; equivalent material by specified manufacturers is acceptable.

B. Sleeves: Pipe Shields, Insul, RK Industries

C. Pipe Wrap Tape: Polycen, Nassua, 3M

D. Firestop: Nelson, Dow, 3M, Hilti

E. Escutcheon Plates: Beaton & Corbin Manufacturing

DocuSign Envelope ID: 330DEBD6-9A9E-4F34-BDCC-1AC1BAA701E9

2.2 GENERAL

A. Provide hangers of heavy construction suitable for the size of pipe to be supported. Materials shall be of steel, except pipe rolls of wrought or malleable iron.
   1. Hangers for pipes six-inches or less shall be swivel ring, wrought pipe clamp, or adjustable wrought clevis type. Anvil Figure 260, MSS-SP-69, Type 1.
   2. Hangers for ductile iron or cast iron pipes four-inches or less shall be swivel ring, wrought pipe clamp or adjustable wrought clevis type. Anvil Figure 590, MSS-SP-69, Type 1.
   3. Hangers for pipes eight-inches and above shall have two rods and cross-rod with cast iron pipe roll complete with adjustable sockets and nuts. Anvil Figure 177, MSS-SP-69, Type 41.
   4. When an oversized clevis type hanger is used (i.e., insulate pipe) a pipe spacer shall be placed over the clevis bolt as a spacer to assure that the lower U-strap will not move in on the bolt.

B. Multiple or trapeze pipe hangers shall be steel channels with welded spacers and hanger rods if hanger load calculations are submitted.

C. Wall support shall be welded steel bracket with hanger.

Light Duty Wall Support:	Anvil Figure 194, MSS-SP-69, Type 31.
Medium Duty Wall Support:	Anvil Figure 195, MSS-SP-69, Type 32.
Heavy Duty Wall Support:	Anvil Figure 199, MSS-SP-69, Type 33.

D. Metal Framing Channels:
   1. Provide perforated epoxy painted finish, 12-gauge minimum steel channels securely anchored to wall structure with interlocking, split type, bolt-secured, galvanized pipe/tubing clamps. B-Line type B22, S pattern with B-2000 series clamps, Power-Strut Type PS200 H with PS 1200 clamps or equal.
   2. When copper piping is being supported, provide flexible elastomeric/thermoplastic isolation cushion material to completely encircle the piping and avoid contact with the channel or clamp, equal to B-Line B1999 Vibra Cushion, or provide manufacturers clamp and cushion assemblies, B-Line BVT series, Power-Strut PS 004T – PS 106N Series or equal.

E. Support stationary vertical piping with carbon steel double bolt riser clamps attached to the pipe. Weld shear lugs to the pipe. In general, use one clamp for each two floors and one clamp at each floor for copper tubing. Where pipes are in open shafts, provide forged steel bar brackets fixed to wall. Riser clamps shall be copper plated when used with copper pipe. Locate riser clamp immediately under coupling or other fitting. Anvil Figure 261, MSS-SP-69, Type 8 for steel pipe; Anvil Figure CT121, MSS-SP-69, Type 8 for copper pipe.

F. Select hangers and supports in accordance with the manufacturer's recommended maximum loading. Hangers shall have a safety factor of 5 of 1.

G. Hangers shall not be disengaged by movement of supported pipe.

H. Provide copper-plated or felt-lined hangers for copper piping or provide 10-mil pipe wrap tape on pipe at hangers. Tape shall extend a minimum of 2 inches beyond hanger saddle on both ends and be wrapped around pipe a minimum of 2 turns. Install vinyl-coated hangers for all plastic piping.

I. Steel hanger rods shall be threaded both ends, threaded one end, or continuous threaded, black finish. Provide rods complete with adjusting and lock nuts. Anvil Figures 146, 140 or 253.

J. Pipe Support Recommendations for Rigid Grooved Joint Systems: The maximum hanger spacing in the specification to ANSI/ASME B31.1 as noted and should be used only in conjunction with Victaulic 07 zero-flex rigid couplings. For flexible systems the hanger, support, spacing and location refer to the pipe support recommendations section in the Victaulic "Field Assembly and Installation Pocket Handbook" or equivalent provided by Grooved Joint Manufacturer.

K. Beam Clamps:
   1. Provide MSS SP-69 Type 23 malleable black iron clamp for attachment to beam flange up to 0.62 inches thick for single threaded rods of ⅜-, ½-, and ⅝-inch diameter, for use with pipe sizes 4-inch and less. Furnish with a hardened steel cup point set screw. Anvil Figure 86.

DocuSign Envelope ID: 330DEBD6-9A9E-4F34-BDCC-1AC1BAA701E9

2. Provide MSS SP-69 Type 28 or Type 29 forged steel jaw type clamp with a tie rod to lock clamp in place, suitable for rod sizes up to 1.5-inch diameter but limited in application to pipe sizes 8-inch and less without prior approval. Anvil Figure 228.

L. Continuous Concrete Insert Channels:
1. Provide steel inserts with industry standard pre-galvanized finish, nominally 1⅝-inch wide by 1⅜-inch deep by length to suit the application, designed to be nailed to concrete forms and provide a linear slot for attaching other support devices.
2. Installed channels shall provide a load rating of 2,000 pounds per foot in concrete. Manufacturer's standard brackets, inserts, and accessories designed for use with continuous concrete inserts are acceptable.
3. Select insert length to accommodate all pipe and conduit in the area.

M. Anchors shall be fabricated using welding steel shapes, plates, and bars to secure piping to the structure.

N. Concrete inserts shall be MSS SP-69 Type 18 wedge type or universal concrete inserts.
1. Wedge type shall be constructed of a black carbon steel body with a removable malleable iron nut that accepts threaded rod to ⅞-inch diameter. Wedge design shall allow the insert to be held by concrete in compression to maximize the load carrying capacity. Anvil Figure 281.
2. Universal type shall be constructed of black malleable iron body with a removable malleable iron nut that accepts threaded rod to ⅞-inch diameter. Anvil Figure 282.
3. Use drilled steel shell with plug type inserts when the inserts are placed after the concrete is poured.

2.3 SLEEVES

A. Construct sleeves for pipes passing through walls (other than foundation walls), floors, partitions, hung or furred ceilings, etc., of minimum 18-gauge galvanized steel, flanged on each side of wall, partition, hung or furred ceiling, etc.

B. Provide standard weight galvanized steel pipe sleeves with welded anchor flanges at foundation walls and reinforced concrete or masonry walls.

C. Provide cast iron or fabricated “wall pipe” equivalent to ductile-iron pressure pipe, with plain ends and integral waterstop, unless otherwise indicated.

D. Stack Sleeve Fittings: Provide manufactured, cast-iron sleeve with integral clamping flange. Include clamping ring, bolts, and nuts for membrane flashing and underdeck clamping ring with setscrews.

E. Install escutcheons at exposed piping through floors, ceilings, walls and partitions in finished areas, within cabinets and millwork, and piping through all fire-rated separations. Provide manufactured wall and ceiling escutcheons and floor plates, with an inside diameter to closely fit around pipe, tube, and insulation of insulated piping and an outside diameter that completely covers opening. Escutcheons shall be cast iron or cast brass, deep-pattern escutcheons if required to conceal protruding fittings, sleeve hubs or firestopping projections.

2.4 PENETRATION FIRESTOP

A. Fire-Rated Construction: Maintain barrier and structural floor fire resistance ratings including resistance to cold smoke at all penetrations, connections with other surfaces or types of construction, and sound or vibration absorption, and at other construction gaps.

B. Smoke Barrier Construction: Maintain barrier and structural floor resistance to cold smoke at all penetrations, connections with other surfaces and types of construction and at all separations required to permit building movement and sound or vibration absorption, and at other construction gaps.

C. Systems or devices listed in the UL Fire Resistance Directory under categories XHCR and XHEZ may be used, providing that it conforms to the construction type, penetrant type, annular space

DocuSign Envelope ID: 330DEBD6-9A9E-4F34-BDCC-1AC1BAA701E9

requirements and fire rating involved in each separate instance, and that the system be symmetrical for wall applications. Systems or devices must be asbestos-free. Mortar systems must be Warnock Hersey approved.

D. Withstand the passage of cold smoke either as an inherent property of the system, or by the use of a separate product included as a part of the UL system or device, and designed to perform this function.

E. All firestopping products must be from a single manufacturer.

F. Through-penetration smokestopping at smoke partitions: Any system complying with the requirements for through-penetration firestopping in fire-rated construction, as specified, is acceptable, provided that the system includes the specified smoke seal or will provide a smoke seal. The length of time of the fire resistance may be disregarded in a non-fire rated smoke barrier.

G. Seal all pipe penetrations through fire-rated construction with factory-built devices or with manufactured fill, void, or cavity materials “Classified” by Underwriters Laboratories Inc. for use as a Through-Penetration Firestop. All firestop devices and systems shall be approved for such use by the Authority Having Jurisdiction. The firesafing system used shall maintain the fire-resistance rating of the building component that is penetrated.

H. All materials shall be non-hardening and non-toxic. The firesafing system used shall accommodate expansion and contraction of the floating plumbing piping systems without damaging the firestop or reducing its effectiveness as a smoke barrier or water seal.

2.5 GROUT

A. Grout shall be slow-hardening after application, volume-adjusting, non-staining, non-corrosive, non-gaseous, and recommended for interior and exterior applications.

B. Provide ASTM C1107/C1107M, Grade B, non-shrink and non-metallic, dry hydraulic-cement grout.

C. Design Mix: 5,000 psi, 28-day compressive strength from a premixed and factory pre-package.

PART 3 - EXECUTION

3.1 HANGERS AND SUPPORTS

A. Deflection of pipes shall not exceed 1/240th (0.416 percent) of span. Support horizontal piping in accordance with the following schedule:

Pipe Size (inches)	Maximum Hanger Spacing (Feet)		Hanger Rod Diameter (inches)
	Steel	Cast Iron	Steel/Cast Iron
up to 1	7	–	⅜
1.25	9	–	⅜
1.5 & 2	9	5	⅜
2.5	12	5	0.5

B. Provide hangers at each change in direction and both sides of valves 4-inch and larger. Place a hanger within 12 inches of each horizontal elbow, valve, strainer, or similar piping specialty item. Provide hanger on both sides of “no-hub” mechanical joints.

C. Support hangers from concrete inserts or beam clamps. Furnish, locate and set inserts. Construct inserts of malleable iron or pressed steel with space for rods of all sizes. Install inserts for pipes 3 inches and larger in size with a reinforcing rod ⅝-inch in diameter run through a slot in the insert specifically provided for this purpose.

D. If piping is required in a space where no inserts have been provided, drill holes in the slab (subject to Structural Engineer’s prior approval) and provide rods and hanger attached to an approved

DocuSign Envelope ID: 330DEBD6-9A9E-4F34-BDCC-1AC1BAA701E9

fishplate or install double expansion shields connected by a 2-inch by 2-inch angle, from which the hanger rod is to be suspended. For pipe size 2 inches and under use single shields but the hanger spacing shall be reduced to 5 feet. The carrying capacity and size of each shield shall be calculated on the basis of the spacing indicated above but the minimum size shall be ⅜-inch. Install additional shields of the same size so that the number of hangers is of adequate size to support the loads, which they carry. Shields may be used in concrete slabs only. Obtain from the expansion shield manufacturer an ICBO Evaluation Report for the product and submit to the Architect.

E. Regardless of the type of construction (i.e., concrete, concrete-deck-steel or other variations) take particular care to support main lines and large and heavy pipes in an approved manner, including the provision of supplementary steel, if required. Supplementary steel shall be mill-rolled sections. Submit shop drawings, indicating support methods, point loadings to the building structure and hanger locations for review sufficiently in advance of concrete pouring schedules to permit evaluation, critique and any necessary changes to handling and support methods.

F. Hangers shall be directly bolted to steel beams of building construction, where they occur if approved by the Structural Engineer. Smaller pipes shall be suspended from crosspieces of pipe or steel angles, which in turn, are securely fastened to building beams or hung from building concrete construction by means of rods and inserts. The intention is to provide supports which shall be amply strong and rigid for the load, but which will not weaken or unduly stress the building construction.

G. Attachments to existing steel deck shall be limited to loads of 500 pounds. Heavier loads shall be supported by supplementary structural steel connected to structural beams. Provide all required supplementary steel.
   1. Attachments with loads up to 500 pounds shall be accomplished by drilled-in expansion shield type anchors located on the centerline of the concrete-filled ribs.
   2. No attachments shall be permitted to new or existing electrified decks. If hanger attachments are not existing, all new attachments shall be supported from supplementary steel.
   3. 500-pound load attachments shall be spaced not less than 60 inches apart, and shall be located as close to steel beams as possible.

H. Provide approved roller support, floor stands, wall brackets, etc., for lines running near the floor or near walls, which can be properly supported or suspended by the floors or walls. Pipelines near walls may also be hung by hangers carried from approved wall brackets at a higher level than the pipe.

I. Do not hang piping from supports for other services. Installed supports shall accommodate free expansion of the piping system.

J. Wherever hangers using pipe rolls are used, provide approved steel pipe covering protection saddles, spot-welded to the piping at each hanger location.

K. Anchor piping where shown to localize expansion or to prevent undue strain on piping and branches. Anchors shall be entirely separate from hangers and of heavy forged or welded construction of approved design. All anchor designs, when submitted for approval, shall include piping reactions which respective anchors are capable of supporting. Provide indicated expansion loop.

L. Install anchors where indicated on the drawings and details. Where not specifically indicated, install anchors at ends of principal pipe runs and at intermediate points in pipe runs between expansion loops. Make provisions for preset of anchors as required to accommodate both expansion and contraction of piping.

M. Support copper tubing individually by approved hangers not more than 6 feet apart. Hangers for uncovered lines shall be specially designed for copper tubing and of exact outside diameter of tubing. Hangers for covered tubing shall be broad straps fitting outside of covering.

N. Hangers for insulated piping shall support the pipe without piercing the insulation.

DocuSign Envelope ID: 330DEBD6-9A9E-4F34-BDCC-1AC1BAA701E9

O. Use hangers, which are vertically adjustable 1.5-inch minimum after piping is erected. Install hangers so that ½-inch minimum clearance is maintained between finished covering of pipe and adjacent work.

P. Support riser piping independently of connected horizontal piping.

Q. Adjust hangers to obtain pipe slope where specified.

R. Where piping can be conveniently grouped to allow the use of trapeze type supports, use standard structural shapes or continuous insert channels for the supporting steel. Where continuous insert channels are used, pipe supporting devices made specifically for use with the channels may be substituted for the specified supporting devices provided that similar types are used and all data is submitted for prior review.

S. Perform all welding in accordance with standards of the American Welding Society. Clean surfaces of loose scale, rust, paint or other foreign matter and properly align before welding. Use wire brush on welds after welding. Welds shall show uniform section, smoothness of weld metal and freedom from porosity and clinkers. Where necessary to achieve smooth connections, joints shall be dressed smooth.

T. Factory coat supports and anchors used in corrosive atmospheres with hot dip galvanizing after fabrication, ASTM A123/A123M, 1.5-ounces/square foot of surface, each side. Mechanical galvanize threaded products, ASTM B695 Class 150, 2.0 mil coating. Field cuts and damaged finishes shall be field-covered with zinc-rich paint of comparable thickness to factory coating. Corrosive atmospheres include the following locations:
   1. Exterior locations, parking ramps, carwash areas
   2. Swimming pool equipment, chemical storage or hazardous waste storage rooms
   3. Wet wells, meter pits
   4. Sanitary and storm sewer pumping stations
   5. Food service/kitchen areas, walk-in coolers/freezers
   6. Locker/shower rooms
   7. Greenhouses

3.2 SLEEVES

A. Provide sleeves for pipe passing through floors, walls or partitions, hung or furred ceilings, of sufficient diameter to accommodate pipe covering where such is required. Locate sleeves secure in place so that an equal space is around the pipe, after the pipe is installed.

B. For sleeves at penetrations of metal deck, nail, screw or weld to the deck prior to the pouring of the deck concrete. Set sleeves in such a manner so that no concrete fills their interior during the concrete pouring and finishing operations.

C. For exposed pipes, caulk floor sleeves with firestop material watertight and project sleeve approximately 2 inches above the finished floor. Finish sleeves with specified flanges flush with the bottom of slab and also with the finished faces of wall.

D. Provide sleeves with an inside diameter at least ½-inch greater than outside of pipe served, including pipe insulation which must be continuous through sleeve.

E. Where piping penetrates walls (other than foundation walls), partitions, floor slabs, etc., pack space between piping and sleeve with mineral wool (for depth of sleeve), or firestop material.

F. Do not support pipes by resting clamps on sleeves. Clamps shall extend beyond sleeve and be supported outboard of sleeve in an approved manner. In no case shall sleeves be cut or slotted to accommodate pipe clamps.

G. Provide escutcheon plates of the proper size for piping in sleeves passing through floors, walls, soffits, furrings, partitions, hung ceilings, etc., throughout the building where exposed. Exposed escutcheons shall be cast brass chromium plated, bell type, with setscrews of sufficient diameter to include any required pipe insulation. Attach escutcheon to building material, not to pipe. Do not penetrate vapor barriers.

DocuSign Envelope ID: 330DEBD6-9A9E-4F34-BDCC-1AC1BAA701E9

1. Split-casting, deep-pattern type cast-brass type with concealed hinge and set screw with polished chrome-plated and rough brass finish.
2. Split-casting, floor-plate type cast brass with concealed hinge and set screw.

3.3 FIRESTOPPING

A. Where space for future pipes and conduits is required, provide sleeves and fill with lightweight concrete or firestop.

B. Provide firestopping and grouting around pipes penetrating concrete slabs, concrete walls and masonry walls with cement grout in the sleeved opening extending full depth through wall or floor slab. Provide sheet metal cover over the insulation before applying grout. Around pipes through fire rated gypsum board construction, pack the annular space between the wall sleeve and the insulation sheet metal cover with noncombustible approved firestop material and finish with escutcheons on pipe where exposed. Attach escutcheons to wall.

C. Verify existing conditions and substrates before starting work. Correct unsatisfactory conditions before proceeding. Proceed with installation only after penetrations of the substrate and supporting brackets have been installed.

D. Environmental Requirements:
1. Provide adequate ventilation if using solvent.
2. Provide forced-air ventilation during installation if required by manufacturer.
3. Keep flammable materials away from sparks or flame.
4. Provide masking and drop cloths to prevent contamination of adjacent surfaces by firestopping materials.
5. Comply with manufacturing recommendations for temperature and humidity conditions before, during and after installation of firestopping.

E. Clean surfaces that will be in contact with penetration seal materials of dirt, grease, oil, loose materials, rust, or other substances that may affect proper fitting, adhesion, or the required fire resistance.

F. Install penetration seal materials in accordance with the UL Fire Resistance Directory or Mortars per Warnock Hersey approval and in accordance with manufacturer's instruction.

G. Seal holes or voids made by penetrations to ensure an effective smoke barrier.

H. Where large openings are created in walls or floors to permit installation of pipes or other items, close unused portions of opening with firestopping material tested for the application. See UL Fire Resistance Directory or Warnock Hersey approvals.

I. Install smokestopping as specified for firestopping.

3.4 GROUTING

A. Mix, install and cure grout for plumbing equipment base bearing surfaces, pump and other equipment base plates, and anchors.

B. Clean surfaces that will come into contact with grout. Provide forms as required for placement of grout. Avoid air entrapment during placement of grout.

C. Place grout around anchors.

END OF SECTION

DocuSign Envelope ID: 330DEBD6-9A9E-4F34-BDCC-1AC1BAA701E9

SECTION 99-220548

VIBRATION ISOLATION AND SEISMIC RESTRAINTS FOR PLUMBING

PART 1 - GENERAL

1.1 WORK INCLUDED

A. The work of this Section shall include, but is not limited to, the following:
   1. Vibration isolation elements for plumbing piping and rotating equipment
   2. Equipment isolation bases
   3. Flexible connectors
   4. Seismic restraints for isolated and non-isolated equipment and piping
   5. Supervision and inspection of installed vibration isolators, seismic restraints, anchorage and associated hardware

1.2 RELATED DOCUMENTS

A. Section 99-220501 – Plumbing General Provisions

B. Section 99-220529 – Hangers and Supports for Plumbing Piping and Equipment

1.3 REFERENCE STANDARDS

Published specifications standards, tests or recommended methods of trade, industry or governmental organizations apply to work in this Section where cited below:

A. ASCE – American Society of Civil Engineers
   1. ASCE 7-05, 2006 Revised 2007 – Minimum Design Loads for Buildings and Other Structures

B. Federal Specifications
   1. MIL-DTL-83420 (2005) – Wire Rope, Flexible, for Aircraft Control

C. 2013 California Building Code: Title 24 Building Standards

D. 2013 California Fire Code

1.4 QUALITY ASSURANCE

A. Provide control of excessive noise and vibration in the buildings due to the operation of machinery or equipment, and/or due to interconnected piping or conduit. Install vibration isolation units and associated hangers and bases under the direct supervision of the vibration isolation manufacturer's engineer.
   1. Vibration isolators shall have either known undeflected heights or calibration markings so that after adjustment, when carrying their load, the deflection under load can be verified, thus determining that the load is within the proper range of the device and that the correct degree of vibration isolation is being provided according to the design.
   2. Isolators shall operate in the linear portion of their load versus deflection curve. Furnish load versus deflection curves that are linear over a deflection range of not less than 50 percent greater than the design deflection.
   3. The ratio of lateral to vertical stiffness shall be neither less than 0.9 nor greater than 1.5.
   4. The theoretical vertical natural frequency for each support point, based upon load per isolator and isolator stiffness shall not differ from the design objectives for the equipment as a whole by more than plus or minus 10 percent.
   5. All neoprene mountings and components shall be oil resistant and have:
      a. Shore durometer hardness of 40 to 65, after minimum aging of 20 days or corresponding oven-aging
      b. Minimum tensile strength of 2,000 pounds per square inch
      c. Minimum elongation of 300 percent
      d. Maximum compression set at 25 percent

B. Mounting systems or components shall not be resonant with any of the supported equipment forcing frequencies.

DocuSign Envelope ID: 330DEBD6-9A9E-4F34-BDCC-1AC1BAA701E9

C. Isolators shall be selected on the basis of the static and dynamic loads actually supported. Dynamic loads include those due to: wind, fluid flow, thrust and rotational inertia. Select each isolator independently for proper load distribution on each piece of equipment and pipe support, or base.

D. Vibration isolation hardware shall not be concealed until reviewed by the Architect.

E. Verify specified clearances, plumb installation of hanger rods and lack of interference – no contact permitted with gypsum board, framing, ceiling wires, light fixtures, conduit, ducts and piping.

F. Verify that the space below inertia bases is clean and clear of construction debris and obstructions.

G. Verify proper vibration isolator loading and deflection.

H. Vibration isolation field inspection engineer shall provide a punchlist report for the Architect's review.

I. Vibration isolation and seismic restraint field inspection engineer shall submit a close-out letter stating that the installation is complete and meets the requirements of the specification and the manufacturer's installation instructions, and all deficiencies noted have been corrected.

1.5 SUBMITTALS

A. Manufacturer's Data:
   1. Catalog cuts and data sheets on specific vibration isolators to be utilized showing compliance with the specifications.
   2. An itemized list showing the items of equipment and piping to be isolated, the isolator type and model number selected, isolator loading and deflection, and reference to specific drawings.
   3. Written approval of the base design shall be obtained from the equipment manufacturer.

B. Shop Drawings: Concrete reinforcing details and templates for all foundations, bases, supports, inertia blocks, hanger bolts, etc.; support frame details, pipe support details; vibration isolation mountings for equipment and piping including equipment weight, center of gravity and operating speed, location and installation details. Include in the vibration isolation equipment submittal drawing the following information based on equipment submittals released for construction:
   1. Isolation mounting deflections.
   2. Spring diameters, compressed spring heights at rated load and solid spring heights where steel spring isolation mountings are used.
   3. Equipment operating speed.
   4. Seismic restraint calculations stamped by a California State licensed structural or civil engineer, confirming compliance with ASCE 7-05.
   5. Note compliance with seismic code regulations and the project specification on the submittals.
   6. Number and location of seismic restraints and anchors for each piece of equipment including but not limited to vertical pipe risers, bolt sizing and embedment depth, and seismic cable strength and diameters.
   7. Specific details of restraints including anchor bolts for mounting and maximum loading at each location.
   8. Drawings showing methods of suspension, support guides for piping and suspended equipment.
   9. Drawings showing methods of isolation of pipes piercing walls and floor slabs.
   10. Provide installation instructions, drawings and field supervision to assure proper installation and performance.
   11. Certificate of compliance for each component mounting system and anchorage as required by CBC Section 1708.5.
   12. Written statement of responsibility as required by CBC Section 1706.

C. Submit close-out letter and report as described in Clauses 1.4, I. and 3.3, A.

D. Submit seismic restraint calculations as described in Clause 2.5, A.

DocuSign Envelope ID: 330DEBD6-9A9E-4F34-BDCC-1AC1BAA701E9

1.6 MANUFACTURER RESPONSIBILITIES

A. Manufacturer of vibration isolation equipment shall have the following responsibilities:
   1. Determine vibration isolation and seismic restraint sizes and required locations.
   2. Provide piping and equipment isolation systems and seismic restraints as scheduled or specified.
   3. Guarantee specified isolation system deflection.
   4. Provide installation instructions, drawings and field supervision to assure proper installation and performance.
   5. Seismic restraints and anchorage shall be designed for the lateral and vertical forces required by the Building Code for the specific project type and site. Confirm lateral and vertical forces and site-specific design criteria with the project Structural Engineer.
   6. Written statement of responsibility for the seismic restraint system as required by CBC Section 1706.

1.7 DEFINITIONS

A. Life Safety Systems:
   1. All plumbing components involved with fire protection including service water supply piping, etc. Life safety system restraints shall be designed with an Importance Factor of 1.5.
   2. All medical and life support systems. Importance Factor 1.5.

B. Positive Attachment:
   1. A positive attachment is defined as a cast-in anchor, a drill-in wedge anchor, a double-sided beam clamp loaded perpendicular to a beam, or a welded or bolted connection to structure. Single sided “C” type beam clamps for support rods of overhead piping, components involved with fire protection or any other equipment are not acceptable as seismic anchor points.

PART 2 - PRODUCTS

2.1 ACCEPTABLE MANUFACTURERS

A. Vibration Isolation: Mason Industries (MII), Vibration Mountings & Control (VMC), Amber-Booth (AB), Vibration Eliminator (VEC), Kinetics Noise Control (KNC), Caldyn

B. Piping Seismic Bracing: Kin-Line, Super Strut, Mason Industries

2.2 MATERIALS

A. All vibration isolation devices shall be the products of a single manufacturer.

B. Where exposed to the atmosphere, all steel shall be hot-dipped galvanized; hardware shall be cadmium plated; springs shall be powder coated.

2.3 VIBRATION ISOLATORS

A. Refer to these specifications and drawings for vibration isolator types to be used:
   1. Type “A” spring isolators shall incorporate the following:
      a. Minimum diameter of 0.8 of the loaded operating height and horizontal spring stiffness 1.1 times rated vertical spring stiffness.
      b. Reserve deflection, from loaded to solid height, of 50 percent of rated deflection with leveling device.
      c. Minimum ½-inch thick neoprene acoustical base pad on underside, unless designated otherwise. Neoprene elements shall be as specified.
      d. Designed and installed so that ends of springs remain parallel.
         Type SLF ..... MII
         Type OSK ..... VEC
         Type RMS ..... VMC
         Type FDS ..... KNC
   2. Type “B” spring isolators shall be similar to Type “A”, except inherently restrained:
      a. Provide built-in resilient vertical limit stops with neoprene grommets.

DocuSign Envelope ID: 330DEBD6-9A9E-4F34-BDCC-1AC1BAA701E9

b. Tapped holes in base plate for bolting isolator to base, housekeeping pad or structural support. Tapped holes in top plate for bolting to equipment.
c. Capable of supporting equipment at fixed elevation during equipment erection.
Type SLR Series 100 ..... MII
Type KW ..... VEC
Type RMSL-EQ ..... VMC
Type FLS ..... KNC

3. Type "C" spring hanger rod isolators shall incorporate the following:
a. Spring element seated on a steel washer in series with a deflected neoprene element as specified.
b. Steel retainer box encasing the spring and neoprene washer. Ensure no metal-to-metal contact.
c. Minimum ½-inch clearance between retainer box and spring hanger rod. Provide neoprene grommet.
d. Maximum 30-degree allowable rod misalignment from centerline axis.
Type 30N ..... MII
Type SNCR ..... VEC
Type RSH-30A ..... VMC
Type SRH ..... KNC

4. Type "C1" pre-compressed spring hanger rod isolators shall incorporate the following:
a. Spring element seated on a steel washer in series with a deflected neoprene element as specified.
b. Steel retainer box encasing the spring and neoprene washer. Ensure no metal-to-metal contact.
c. Minimum ½-inch clearance between retainer box and spring hanger rod. Provide neoprene grommet.
d. Where operating weight differs from installed weight provide built-in adjustable limit stops to prevent equipment rising when weight is removed. Stops shall not be in contact during normal operation. Clearly indicate deflection with scale on isolator.
e. Maximum 30-degree allowable rod misalignment from centerline axis.
Type PC30N ..... MII
Type SNCR ..... VEC
Type RSH-30A ..... VMC
Type SRH ..... KNC

5. Type "D" elastomer inherently restrained isolators shall incorporate the following:
a. Bolt holes for bolting to equipment base.
b. Bottom steel plates for bolting to sub-base as required.
c. Molded unit type neoprene element as specified.
Type BR ..... MII
Type 368 SD ..... VEC
Type FUD-EQ ..... VMC
Type RD ..... KNC

6. Type "E" elastomer hanger rod isolators shall incorporate the following:
a. Molded unit type neoprene element as specified.
b. Steel retainer box encasing neoprene mounting.
c. Clearance between mounting hanger rod and steel retainer box. Provide neoprene grommet.
Type HD ..... MII
Type CD ..... VEC
Type HSS ..... VMC
Type RH ..... KNC

7. Type "F" pad type elastomer mountings shall incorporate the following:
a. ¾-inch minimum thickness neoprene elements as specified. Verify thickness will not degrade or derate the isolator performance.
b. Sized for 50 pounds per square inch maximum loading. Provide suitable bearing plate to distribute load.

DocuSign Envelope ID: 330DEBD6-9A9E-4F34-BDCC-1AC1BAA701E9

c. Ribbed or waffled design.
d. ⅙-inch deflection per pad thickness.
e. 16 gauge galvanized steel plate between multiple layers of pad thickness.
Type Super WMSW ..... MII
Type 200N ..... VEC
Type Iso-Cube ..... VMC
Type NP ..... KNC

8. Type "G" pad type elastomer mountings shall incorporate the following:
a. Neoprene impregnated canvas duck material.
b. Maximum loading 1,000 pounds per square inch. Provide suitable bearing plate to distribute load.
c. Minimum thickness, 2-inch.
Type HL ..... MII
Type Fabriflex ..... VMC

2.4 FLEXIBLE PIPING CONNECTORS

A. Neoprene Type "FC-1":
1. Manufactured of kevlar tire cord and neoprene molded and cured with hydraulic presses.
2. Straight connectors shall have two spheres.
3. Elbow shall have single sphere forming the corner of joint.
4. Rated 150 pounds per square inch at 220 degrees F.
Type Safeflex SFDEJ, SFDCR ..... MII

B. Flexible Stainless Hose, Type "FC-2":
1. Braided flexible metal hose.
2. 2-inch pipe size and smaller with male nipple fittings.
3. 2.5-inch and larger pipe size with fixed steel flanges.
4. Suitable for operating pressure and temperature with 4:1 minimum safety factor.
5. Length as specified on the Drawings.
Type BSS ..... MII
Type MFP ..... VMC

2.5 SEISMIC RESTRAINTS

A. General:
1. Provide restraints capable of safely accepting forces specified in PART 1 of this Section, without failure, to maintain equipment and piping in a captive position. Restraints must not short circuit vibration isolation systems or transmit objectionable vibration or noise. Submit calculations by a structural or civil engineer licensed and registered in the State of the Project to verify seismic restraint and cable capacities.
a. Seismic Restraint, Type I: All directional seismic snubbers shall consist of interlocking steel members restrained by molded neoprene bushing compounded to bridge bearing specifications. Bushing shall be replaceable and a minimum of ¼-inch thick. Rated loadings shall not exceed 1,000 psi. Snubbers shall be manufactured with an air gap between hard and resilient material of not less than ⅛ inch or more than ¼ inch. Snubbers shall be installed with factory set clearances. The capacity of the seismic snubber at ⅜-inch deflection shall be equal or greater than the load assigned to the mounting grouping controlled by the snubber multiplied by the applicable "G" force. Submittals shall include the load deflection curves up to ½-inch deflection in the X-, Y- and Z-planes.
Type Z-1225-1 ..... MII
b. Seismic Restraint, Type II: Cable type with approved end fastening devices (minimum of two per end) to equipment and structure. Cable to comply with Federal Specification MIL-DTL-83420 military grade 7 by 19 galvanized steel.
Type SCBH ..... MII
c. Seismic Restraint, Type III: Seismic solid braces shall consist of steel angles or channels to resist seismic loads with a minimum safety factor of 2 and arranged to

DocuSign Envelope ID: 330DEBD6-9A9E-4F34-BDCC-1AC1BAA701E9

provide all directional restraint. Seismic solid brace end connectors shall be steel assemblies that swivel to the final installation angle and utilize two through bolts to provide proper attachment.
Type SSBS..... MII

PART 3 - EXECUTION

3.1 GENERAL

A. Install in accordance with manufacturer's recommendations and written instructions. Vibration isolators must not cause any change of position of equipment or piping resulting in piping stresses or misalignment.

B. Isolate plumbing equipment from the building structure by means of vibration isolators as specified and scheduled on the Drawings.

C. Vibration isolated piping shall pass freely through walls and floors without rigid connections. Maintain ¾-inch to 1.25-inch concentric clearance around outside surfaces of piping at penetration points. Pack this clearance space tightly with fiberglass, and caulk airtight after installation of piping, or provide resilient firestopping as required. Provide supports 6 to 8 inches from walls or partitions on both sides of penetrations.

D. Do not make rigid connections between equipment and building structure that degrades or short circuits the vibration isolation system specified herein.

E. Loop electrical circuit connections to isolated equipment to allow free motion. Include at least one slack 90-degree bend.

F. Bring to the Architect's attention prior to installation any conflicts with other trades, which will result in unavoidable rigid contact with equipment or piping as, described herein, due to inadequate space or other unforeseen conditions. Corrective work necessitated by conflicts after installation will be at the Contractor's expense.

G. Support vertical piping loads, including water strainers, and valves between pump base elbow supports and the suction and discharge header piping by means of the pump base spring isolators without stress or strain to the pump housing.

H. Provide a flanged steel pipe spool piece between suction and discharge valves and pumps to permit future installation of flexible connectors.

I. Level vibration isolated equipment under rated design operating conditions while maintaining the isolation criteria. Isolators shall be plumb and aligned during operation.

3.2 SEISMIC RESTRAINTS

A. General:
   1. Cable restraints shall be installed slightly slack to avoid short circuiting the isolated suspended equipment, piping. Cable restraints shall be installed taut on non-isolated systems. Seismic solid brace restraints may be used in lieu of cables on non-isolated rigidly attached systems only.
   2. Where cable or solid brace restraints are located, the equipment or piping support rods shall be angle braced for compression loads.
   3. At all locations where cable or solid brace restraints are attached to pipe clevises, the clevis cross bolt shall be reinforced with cross braces.
   4. Provide drill-in concrete anchors for ceiling and wall installation and female wedge type for floor-mounted equipment.

B. Seismic Restraint of Piping:
   1. Transverse piping restraints shall be at 40-foot maximum spacing for all pipe sizes, except where lesser spacing is required to limit anchorage loads.
   2. Longitudinal restraints shall be at 80-foot maximum spacing for all pipe sizes, except where lesser spacing is required to limit anchorage loads.

DocuSign Envelope ID: 330DEBD6-9A9E-4F34-BDCC-1AC1BAA701E9

3. Where thermal expansion is a consideration, guides and anchors may be used as transverse and longitudinal restraints provided they have a capacity equal to or greater than the restraint loads in addition to the loads induced by expansion or contraction.
4. For fuel oil and all gas piping, transverse restraints must be at 20-foot maximum and longitudinal restraints at 40-foot maximum spacing.
5. Transverse restraint for one pipe section may also act as a longitudinal restraint for a pipe section of the same size connected perpendicular to it if the restraint is installed within 24 inches of the elbow or tee or combined stresses are within allowable limits at longer distances.
6. Hold-down clamps must be used to attach pipe to all trapeze members before applying restraints in a manner similar to clevis supports.
7. Branch lines may not be used to restrain main lines.
8. Cast iron pipe of all types, glass pipe and any other pipes joined with a four band shield and clamp assembly shall be seismically restrained at not more than one-half the spacing in Clauses 3.05.B.2 and 3.05.B.3 above. Additional transverse and longitudinal restraint shall be provided on both sides of each change in direction of 90 degrees or more.

C. Seismic Restraint Exclusions:
1. Piping:
   a. Gas piping less than 1-inch inside diameter.
   b. Piping in boiler and mechanical rooms less than 1.25-inch inside diameter.
   c. All other piping less than 2.5-inch inside diameter.
   d. All piping suspended by individual hangers 12 inches or less as measured from the top of the pipe to the bottom of the support where the hanger is attached. However, if the 12-inch limit is exceeded by any hanger in the run, seismic bracing is required for the run.
   e. The 12-inch exemption applies for trapeze supported systems if the top of each item supported by the trapeze qualifies.

3.3 INSPECTION

A. On completion of installation of all vibration isolation devices specified herein, the local representative of the isolation manufacturer, the manufacturer's engineer shall inspect the completed system and submit a report to the Architect indicating the adequacy of the installation and listing any corrective action required.

B. Replace any component found to be visibly deflected with more substantial components.

END OF SECTION

DocuSign Envelope ID: 330DEBD6-9A9E-4F34-BDCC-1AC1BAA701E9

SECTION 99-220550

ACCESS DOORS IN GENERAL CONSTRUCTION FOR PLUMBING

PART 1 - GENERAL

1.1 WORK INCLUDED

A. The work of this Section shall include, but is not limited to, the following:
   1. Furnishing access doors for installation in general construction and color-coded identification dots.

1.2 RELATED DOCUMENTS

A. Section 99-220501 – Plumbing General Provisions

B. Section 99-220553 – Systems Identification for Plumbing

1.3 REFERENCE STANDARDS

A. ASME – American Society of Mechanical Engineers
   1. ASME A13.1 – 2007: Scheme for the Identification of Piping Systems

B. ASTM – American Society for Testing and Materials
   1. ASTM A167: Standard Specification for Stainless and Heat-Resisting Chromium-Nickel Steel Plate, Sheet and Strip
   2. ASTM A1008: Standard Specification for Steel, Sheet, Cold-Rolled, Carbon, Structural, High-Strength Low-Alloy

C. NAAMM – National Association of Architectural Metal Manufacturers
   1. AMP 500-06 – Metal Finishes Manual for Architectural and Metal Products

D. UL – Underwriters Laboratories Inc.
   1. UL Fire Resistance – 2009: Fire Resistance Directory set

1.4 QUALITY ASSURANCE

A. Single-Source Responsibility: Obtain doors for the entire project from a single manufacturer.

B. Fire-Resistive Rating: Wherever access doors are required in construction where a fire-resistive classification is indicated, on the Architectural documents, provide access door assembly with panel door, frame, hinge and latch from manufacturer listed in Underwriters Laboratories Inc.'s "Building Materials Directory" for required rating.
   1. Provide UL Label on each fire-rated access door.

C. Furnish inserts and anchoring devices that must be built into other work for installation of access doors.

1.5 SUBMITTALS

A. Shop Drawings: Submit access door locations superimposed on piping layout shop drawings. Submit manufacturer's data on access doors including size and type.

PART 2 - PRODUCTS

2.1 ACCEPTABLE MANUFACTURERS

A. Access Doors: Milcor Inc., Karp Associates, Inc., J.L. Industries, Acudor, Williams Brothers

B. Color-Coded Identification Buttons: Brady/Seton, Stranco

2.2 ACCESS DOOR CONSTRUCTION

A. Provide recessed type as required to accept matching ceiling tile or drywall, etc.

B. Provide UL-rated doors for fire-rated construction.

DocuSign Envelope ID: 330DEBD6-9A9E-4F34-BDCC-1AC1BAA701E9

C. Provide flush type steel framed panel with concealed continuous piano hinges for masonry or concrete construction. Provide textured frame for drywall construction.

D. Provide cam type locking device. Provide cylinder lock type access doors located in public corridors and washrooms complete with master keys.

E. Provide insulated doors in insulated or acoustically rated construction.

F. Furnish access doors of proper size for access to concealed equipment. Unless otherwise indicated, minimum size to be 12-inch by 12-inch for hand access and minimum 18-inch by 18-inch for valve and actuator access and 24-inch by 24-inch for equipment access. The following schedule is based on Karp Associates Inc.:
   1. Rated Construction: Fire-rated access door UL “B” Label Model KRP
   2. Non-Rated Dry Wall Construction: Model KDW
   3. Non-Rated Masonry, Concrete: Model DSC 214-M
   4. Non-Rated Ceramic Tile, Stainless Steel, Satin Finish: Model DSC 214-M
   5. Non-Rated Plaster Wall: Model DSC 214-PL
   6. Non-Rated Plaster Ceilings: Model DSC 210-PL

G. Provide color-coded dots on access doors and accessible ceiling tiles to indicate type of service.

PART 3 - EXECUTION

3.1 GENERAL

A. Coordinate location of access doors in hung ceilings, furred spaces, walls, etc., to provide access to concealed work items requiring maintenance and/or adjustment. Obtain approval of the Architect for the locations of such access doors.

B. Locate and group equipment requiring access doors. Coordinate location of equipment with other trades to minimize number of access doors in one area.

C. Provide access doors for maintenance or adjustment purposes for plumbing system components, including but not limited to the following:
   1. Valves
   2. Concealed equipment

D. Access doors shall be marked by small color markings at corner of tile or door in accordance with the following color assignments:
   Plumbing – Silver

END OF SECTION

DocuSign Envelope ID: 330DEBD6-9A9E-4F34-BDCC-1AC1BAA701E9

SECTION 99-220553

SYSTEMS IDENTIFICATION FOR PLUMBING

PART 1 - GENERAL

1.1 WORK INCLUDED

A. The work of this Section shall include, but is not limited to, the following:
   1. Valve identification
   2. Equipment identification
   3. Piping identification
   4. Signage

1.2 RELATED DOCUMENTS

A. Section 99-220501 – Plumbing General Provisions

B. Section 99-220550 – Access Doors in General Construction for Plumbing

1.3 REFERENCE STANDARDS

A. ASME – American Society of Mechanical Engineers
   1. ASME A13.1 – 2007: Scheme for the Identification of Piping Systems

B. ASTM – American Society for Testing and Materials
   1. ASTM D709 – 2007: Standard Specification for Laminated Thermosetting Materials

C. APWA – American Public Works Association
   1. Recommended Guidelines for Underground Utilities

1.4 QUALITY ASSURANCE

A. Above ground piping identification shall comply with ASME Standard A13.1.

B. Underground piping identification shall comply with APWA Recommended Guidelines for Underground Utilities.

1.5 SUBMITTALS

A. Submit the following:
   1. Valve identification chart
   2. Lists of pipe and equipment to be labeled
   3. Color chart

B. Product Data: Manufacturer's latest published data for materials, equipment and installation, including samples of valve tags, equipment identification and piping identification.

C. Maintenance Manuals: Provide valve tag schedules for inclusion in maintenance manuals.

1.6 PERFORMANCE REQUIREMENTS

A. Identification shall meet or exceed the performance requirements specified in this specification section.

PART 2 - PRODUCTS

2.1 ACCEPTABLE MANUFACTURERS

A. Seton

B. Stranco

C. Kolbi

2.2 VALVE IDENTIFICATION

A. All tagged components shall be in accordance with ASME A13.1.

DocuSign Envelope ID: 330DEBD6-9A9E-4F34-BDCC-1AC1BAA701E9

B. For valves, use metal tags 2-inch minimum diameter, fabricated of 19-gauge polished brass, stainless steel or aluminum.
   1. Attach tags with jack chain "S"-hook or split ring of same materials.
   2. Provide engraved/stamped tags with black ink-filled ¼-inch high letters and ½-inch high numbers.
   3. Provide minimum $^{5}/_{32}$-inch hole for fastener.

2.3 PIPE IDENTIFICATION

A. Pipe markers shall have 1.25-inch high letters and integral directional flow arrows. Smaller letters may be used only when space does not permit 1.25-inch high lettering.

B. For piping up to 5-inch diameter, use pre-formed snap-on markers.

C. For piping 6-inch diameter and up, use pre-formed strap-on markers with nylon straps.

D. Material: Semi-rigid colored vinyl; 15 gauge up to 1-inch pipe, 30 gauge for all other pipe sizes.

E. Seton "Setmark" or equal.

F. Pressure-sensitive tapes are unacceptable.

G. Exterior Underground Pipe Markers:
   1. Material shall be detectable tape, nominal 5-mil thick, minimum 3 inches wide with aluminum backing.
   2. Tape color, size and depth to be in accordance with APWA standards with black lettering and appropriate warning message.

2.4 EQUIPMENT IDENTIFICATION

A. Plumbing equipment shall be identified by means of nameplates permanently screw-fastened to the equipment. Nameplates shall be black surface, white core laminated bakelite with engraved letters. Plates shall be a minimum of 3-inch long by 1-inch wide with white letters ⅜-inch high.

2.5 SIGNAGE

A. Provide engraving stock melamine plastic laminate, complying with ASTM D709, in sizes and thicknesses indicated, engraved with engraver's standard letter style of sizes and wording indicated, black with white core (letter color) except as otherwise indicated, punched for fastening except where adhesive mounting is necessary because of substrate.
   1. Thickness: $^{1}/_{16}$-inch for signs up to 20 square inches or 8-inch length; ⅛-inch for larger signs.
   2. Fasteners: Self-tapping stainless steel screws, except contact type permanent adhesive where screws cannot or should not penetrate substrate.

PART 3 - EXECUTION

3.1 VALVE IDENTIFICATION

A. Do not identify valves where the use is obvious, such as equipment isolation valves.

B. Provide schedules of all valves showing identification number, size, type and service of each valve. Provide separate list for each separate type of system. Incorporate in maintenance manuals.

3.2 EQUIPMENT IDENTIFICATION

A. Identify equipment with identical letter and/or number as used on the Drawings. Where space is available, use full name of equipment. Attach nameplates in a permanent manner in a location that will be clearly visible after installation is complete.

3.3 PIPING IDENTIFICATION

A. Piping identification shall be in conformance with the ASME A13.1.

B. Identify piping systems with color-coded bands, sharply contrasting with background. Locate bands near strategic points, such as valves, items of equipment, changes in direction, wall

DocuSign Envelope ID: 330DEBD6-9A9E-4F34-BDCC-1AC1BAA701E9

penetrations, capped stub-out for future connection and every 40 feet of straight runs. If necessary, paint a strip background of black or white to obtain contrast.

C. Apply bands where they can be easily read. Provide bands with backgrounds of different colors.

3.4 ACCESS IDENTIFICATION

A. Identify service, piping and equipment behind all architectural access doors.

B. Removable ceiling tile shall be marked by small color markings at corner of tile or door in accordance with the following color assignment:

Plumbing – Silver

3.5 INSTALLATION OF IDENTIFICATION

A. Where identification is to be applied to surfaces which require insulation, painting or other covering or finish, including valve tags in finished spaces, install identification after completion of covering and painting. Install identification prior to installation of acoustical ceilings and similar removable concealment.

END OF SECTION

DocuSign Envelope ID: 330DEBD6-9A9E-4F34-BDCC-1AC1BAA701E9

SECTION 99-220700

INSULATION FOR PLUMBING

PART 1 - GENERAL

1.1 WORK INCLUDED

A. The work of this Section shall include, but is not limited to, the following:
   1. Piping insulation, jackets
   2. Equipment insulation and covering

1.2 RELATED DOCUMENTS

A. Section 99-220501 – Plumbing General Provisions

B. Section 99-221100 – Domestic Water Systems

C. Section 99-221110 – Plumbing Piping and Accessories

D. Section 99-221300 – Drainage Systems

1.3 REFERENCE STANDARDS

Published specifications standards, tests or recommended methods of trade, industry or governmental organizations apply to work in this Section where cited below:

A. ASTM – American Society for Testing and Materials
   1. ASTM C534/C534M – 2008: Standard Specification for Preformed Flexible Elastomeric Cellular Thermal Insulation in Sheet and Tubular Form
   2. ASTM C547 – 2007 Revised 2008: Standard Specification for Mineral Fiber Pipe Insulation
   3. ASTM C612 – 2004 Revised 2009: Standard Specification for Mineral Fiber Block and Board Thermal Insulation
   4. ASTM E84 – 2009: Standard Test Method for Surface Burning Characteristics of Building Materials

B. NFPA – National Fire Protection Association
   1. NFPA 225, Edition 09 – Model Manufactured Home Installation Standard

C. UL – Underwriters Laboratories Inc.
   1. UL 723 – 2008: Test for Surface Burning Characteristics of Building Materials

D. Uniform Plumbing Code – 2012

E. California Plumbing Code – 2013

F. California Building Code – 2013

G. California Energy Code

1.4 QUALITY ASSURANCE

A. All insulation shall be in accordance with Title 24.

B. Insulation supplier and insulation installer shall have a minimum of 5 years' successful installation experience on projects of similar scope to this project.

1.5 SUBMITTALS

A. Product Data: Provide product description, current Product Data Sheets, list of materials and thickness for each service or equipment scheduled, locations, and manufacturer's installation instructions.

B. Submit details of sheet metal boxes for pieces of insulated equipment. Refer to sub-Clause 2.05, A.6.

C. Quality Assurance / Control Submittals:

DocuSign Envelope ID: 330DEBD6-9A9E-4F34-BDCC-1AC1BAA701E9

1. Certificates: Submit manufacturer's certificate that product(s) meet or exceed specified requirements.

1.6 ENVIRONMENTAL REQUIREMENTS

A. Maintain ambient temperatures and conditions during storage and installation of all products required by manufacturers of adhesives, mastics, and insulation cements.

B. Protect insulation from contact with water.

PART 2 - PRODUCTS

2.1 ACCEPTABLE MANUFACTURERS

A. Fiberglass: Johns Manville; Knauf; Owens Corning.

B. Calcium Silicate: Johns Manville; Extol of Ohio, Inc.

C. Elastomeric: Armacell; Aeroflex.

D. Cellular Glass: Pittsburgh Corning.

E. Adhesives and Sealers: Ductmate; Benjamin Foster (BF); 3M; Childers.

F. Jackets:
   1. Metal: Childers; RPR Products.
   2. PVC: Ceel-Co; PIC Plastics.
   3. Other: Venture Tape; Polyguard.

G. Pre-Molded Fittings, Valves, Strainers and Equipment Insulation: Insul-Therm International; Extol of Ohio, Inc.; or approved equal.

2.2 GENERAL

A. Conform to application schedule for type and thickness of insulation.

B. Insulation, jacket, facing and adhesives shall be non-combustible material meeting Code requirements and fire and smoke hazard ratings as tested by procedure ASTM E84, National Fire Protection Association 225, and UL 723, not exceeding Flame Spread 25 and Smoke Developed 50.

C. Adhesive, mastic or insulating material shall not contain asbestos.

D. Vapor jacket permeance shall be 0.02 perms or less.

E. Jacket puncture resistance shall be 50 units (Beach) or greater.

2.3 PIPE INSULATION MATERIALS

A. Glass Fiber: ASTM C547; rigid molded, non-combustible.
   1. Installed 'K' Value: 0.23 BTU-inch per hour-foot²-degree F at 75 degrees F.
   2. Maximum Service Temperature: 850 degrees F.
   3. Vapor Retarder Jacket: White kraft paper, vinyl coated, embossed and reinforced with glass fiber yarn and bonded to aluminum foil, secure with self-sealing longitudinal laps and butt strips.

B. Hydrous Calcium Silicate: ASTM C533; rigid molded pipe.
   1. Installed 'K' Value: 0.40 BTU-inch per hour-foot²-degree F at 300 degrees F.
   2. Maximum Service Temperature: 1,200 degrees F.
   3. Tie Wire: 16-gauge stainless steel with twisted ends on maximum 12-inch centers.

C. Elastomeric Foam: ASTM C534/C534M flexible cellular elastomeric, molded or sheet.
   1. Installed 'K' Value: 0.27 BTU-inch per hour-foot²-degree F at 75 degrees F.
   2. Maximum Service Temperature: 220 degrees F.

D. Cellular Glass:
   1. Inorganic, foamed or cellulated glass, annealed, rigid, hermetically sealed cells, incombustible.

2. Preformed Pipe Insulation with Jacket: Comply with ASTM C552, Type II, Class 2.

E. Field-Applied Jackets:
1. PVC Plastic (PVC): One-piece molded type fitting covers and sheet material, gloss white. Connections shall be pressure-sensitive color-matching vinyl tape.
2. Canvas Jacket (CJ): UL Listed fabric, 6 ounce per square yard, plain weave cotton treated with dilute fire-retardant lagging adhesive.
3. Aluminum Jacket (AL): 0.016-inch thick sheet, stippled finish, with longitudinal slip joints and 2-inch laps, die-shaped fitting covers with factory-attached protective liner.
4. Stainless Steel Jacket (SSJ): Type 304 stainless steel, 0.010 inch, smooth finish.

2.4 PIPE INSULATION SCHEDULES

A. Insulation Schedules:

Service	Temperature Range (degrees F)	Material	Insulation Thickness (inches) for Pipe Sizes:				
			1 and less	1.25 to 2	2.5 to 4	5 to 6	8 and up
Domestic cold water	40 to 60	Elastomeric foam, glass fiber, cellular glass	1	1	1	1	1
Plumbing vents within 10 feet of atmosphere	All	Glass fiber	–	1	1	1	1

B. Fittings, Valves and Flanges:
1. Use factory pre-molded fittings of the same materials and thickness as the adjacent pipe insulation. Such fittings shall be applied to all 90°s, 45°s, Tee's, flanges, and valves.
2. Where pre-molded insulation fittings are not manufactured, insulate fittings, flanges, strainers and valves with mitered segments of the same density as the adjoining pipe covering. Vaporseal for cold (below dew point) applications using adhesive with open weave glass mesh lay in while wet. Provide a final coat of adhesive. Overlap glass mesh and outer coat adjacent covering by a minimum of 2 inches. Adhesive shall be IC 501 or BF 30-35.
3. Provide insulation for the removable covers and flanges of pipe strainers on cold services with built-up sections of glass fiber pipe covering, arranged to facilitate servicing of the strainer. Complete applications with vaporseals as specified above. Vapor barriers shall be sealed and continuous through guides, hangers, walls, sleeves, etc. Adhesives and coatings shall be as noted herein.

C. Jacketing Schedule:

Service	Location	Jacket Type
Domestic cold water	Service entry to first take off Minimum 25 feet from service entry	ASJ

2.5 EQUIPMENT INSULATION

A. Materials:
1. Flexible Fiberglass Blanket: ASTM C553.
   a. Installed 'K' Value: 0.24 at 75 degrees F.
   b. Maximum Service Temperature: 450 degrees F.
   c. Density: 6.0 pounds per cubic foot.
   d. Vapor Retarder Jacket: Aluminum foil reinforced with fiberglass yarn and laminated to fire-resistant kraft paper, secured with UL Listed pressure-sensitive tape and outward clinch expanding staples and vapor barrier mastic as needed. Maximum vapor barrier perm rating shall not exceed 0.02 perms.

DocuSign Envelope ID: 330DEBD6-9A9E-4F34-BDCC-1AC1BAA701E9

2. Rigid Fiberglass Board: ASTM C612.
   a. Installed 'K' Value: 0.23 BTU-inch per hour-foot²-degree F at 75 degrees F.
   b. Maximum Service Temperature: 450 degrees F.
   c. Density: 6.0 pounds per cubic foot.
   d. Vapor Retarder Jacket: Aluminum foil reinforced with fiberglass yarn and laminated to fire-resistant kraft paper, secured with UL Listed pressure-sensitive tape and outward clinch expanding staples and vapor barrier mastic as needed. Maximum vapor barrier perm rating shall not exceed 0.5 perms.
   e. Facing: 1-inch galvanized hexagonal wire mesh stitched on one face of insulation.
3. Hydrous Calcium Silicate: ASTM C533, rigid molded block.
   a. Installed 'K' Value: 0.40 BTU-inch per hour-foot²-degree F at 300 degrees F.
   b. Maximum Service Temperature: 1,200 degrees F.
   c. Attachment: Insulation shall be securely banded in place, tightly butted, joints staggered and secured with 16 gauge stainless steel wire or ½-inch by 0.015 inch galvanized steel bands on 12-inch maximum centers for large areas.
4. Elastomeric Foam: ASTM C534, flexible cellular elastomeric, molded or sheet.
   a. Installed 'K' Value: 0.27 BTU-inch per hour-foot²-degree F at 75 degrees F.
   b. Maximum Service Temperature: 220 degrees F.
5. Apply the vaporseal board by mechanical fasteners such as Graham pins and speed washers. Seal joints with an adhesive, as approved and reinforced with a glass cloth membrane over vinyl mastic, or self-sealing matching tape. Cover pinheads with adhesive, as specified. If vaporseal board is wired, use sheet metal edges to protect the corners of the board from the wire. Seal edges and joints.
6. Enclose removable covers or heads for equipment, (such as strainers, heat exchangers and pumps) in aluminum sheet metal boxes for easy removal with fiberglass board applied to inside of sheet metal boxes of thickness as described above. Provide lifting handles for removal of boxes.
7. Install equipment insulation in accordance with manufacturer's instructions.

PART 3 - EXECUTION

3.1 EXAMINATION AND PREPARATION

A. Verify that all surfaces are clean, dry and free of dirt, duct, debris, moisture or foreign material.

3.2 INSTALLATION

A. Install materials in accordance with manufacturer's recommendations, building codes and industry standards.

B. Verify piping has been pressure-tested as specified in Section 99-221110 – Plumbing Piping and Accessories before applying insulation materials to pipe joints.

C. Continue insulation and vapor barrier through penetrations.

D. Piping, Valve and Accessories Insulation:
   1. Insulate domestic water supply lines inside chases and up to the plumbing fixture supply stop.
   2. Locate insulation and cover seams in least visible locations where exposed.
   3. Neatly finish insulation at supports, protrusions, and interruptions.
   4. Provide insulated pipes, fittings, valves and accessories conveying fluids below ambient temperature with continuous vapor retarder jackets with self-sealing laps. Insulate complete system and provide molded flexible polyvinyl chloride jacket(s) for all fittings and valves. Vaporseal all jacket seams as recommended by the insulation manufacturer.
   5. For insulated pipes, fittings, valves and accessories conveying fluids above ambient temperature, secure jackets with self-sealing lap. Bevel and seal ends of insulation at equipment, flanges and unions.

DocuSign Envelope ID: 330DEBD6-9A9E-4F34-BDCC-1AC1BAA701E9

6. Protect pipe insulation at hangers, guides, and rollers with 20-gauge galvanized metal shields, one-third the insulation circumference in width and minimum 10 inches in length up to 2½-inch pipe size, 12 inches in length on pipes 3-inch and larger, on the outside of the insulation and vapor barrier or jacket. Center shield on hanger and hold shield in place by straps or by manufactured centering tabs or channels on the shield itself. Do not pierce the insulation with hangers.
7. Provide insert between support shield and piping. Fabricate of calcium silicate, rigid phenolic or other heavy density non-deforming insulating material suitable for temperature. Length of insulation inserts shall match support shield length as specified.
8. For exterior applications or locations where abrasion or damage may occur, provide weather protection jacket. Insulated pipe, fittings, accessories joints, and valves shall be covered with ultra-violet light-resistant painted polyvinyl chloride or aluminum jacket. Jacket seams shall be located on bottom side of horizontal piping.
9. Apply prefabricated sectional insulation for straight pipes neatly fitted around the piping, and sealed with adhesive. Apply adhesive to only one side of each joint and not to pipe surface.
10. Seal all joints with BF 30-35 fire-resistant vapor barrier mastic. Oversized pipe sections or board type insulation may be used to fabricate and install insulation around pipe specialties. All void spaces shall be firmly filled with flexible insulation to support oversized pipe insulation.
11. Secure sectional insulation with 0.02-inch thick by ½-inch wide aluminum bands manufactured by Childers, or RPR Products nylon ties, on 24-inch centers for pipe sizes 2 inches and larger. Install at least two (2) bands per section of insulation.
12. Insulate domestic cold water vertical riser support clamps.
13. Insulate and thoroughly vaporseal control valve bodies where the valve actuator penetrates the insulation.
14. Thoroughly vaporseal the ends of all domestic cold water pipe, valve and fitting insulation sections to prevent condensation from wicking between sections.
15. Replace any self-sealing insulation or lap that is found to be not sealing properly. Do not use staples to secure the insulation or coverings.

E. Equipment Insulation:
1. Apply insulation as close as possible to equipment by grooving, scoring, and beveling insulation, if necessary. As required, secure insulation to equipment with studs, pins, clips, adhesive, wires, or bands.
2. Fill joints, cracks, seams, and depressions with bedding compound to form smooth surface. On cold equipment, use vapor-retardant cement.
3. Provide cold equipment containing fluids below ambient temperature with vapor-retardant jackets.
4. For insulated equipment containing fluids above ambient temperature, provide jacket with or without vapor barrier.
5. Cover insulation with metal mesh and finish with ½-inch thick insulating cement, or aluminum jacket.
6. Do not insulate over sight glasses, visual level or flow indicators, nameplates or ASME stamps. Bevel and seal insulation around these items.
7. Cold equipment insulation shall be covered with ½-inch thick insulating cement over vaporseal mastic and copper-clad hexagonal wire.

END OF SECTION

DocuSign Envelope ID: 330DEBD6-9A9E-4F34-BDCC-1AC1BAA701E9

SECTION 99-220800

COMMISSIONING OF PLUMBING

PART 1 - GENERAL

1.1 WORK INCLUDED

A. The work of this Section shall include, but is not limited to, the following:
   1. Work under this Contract shall conform to the requirements of Parts 1 through 7 of the Special Previsions, General Requirements, Conditions of the Contract, and Supplementary Conditions. This specification covers commissioning of the complete plumbing systems for the project.
   2. Furnish labor and material to accomplish the complete commissioning of the plumbing systems as specified herein.
   3. Start-up and testing of the plumbing system equipment.
   4. Testing and adjusting piping and central systems.
   5. Cooperation with the Commissioning Authority.
   6. Providing qualified personnel for participation in commissioning tests.
   7. Providing equipment, materials, and labor as necessary to correct construction and/or equipment deficiencies found during the commissioning process.
   8. Providing Operation and Maintenance Manuals, and as-built drawings to the Commissioning Authority for verification.
   9. Providing training and demonstrations for the plumbing systems.

B. Commissioning work shall be a team effort to ensure that all plumbing equipment and systems have been completely and properly installed, function together correctly to meet the design intent, and document system performance parameters for fine-tuning of control sequences and operational procedures. Commissioning shall coordinate system documentation, equipment start-up, control system calibration, testing and balancing, and verification and performance testing.

C. The commissioning team shall be made up of representatives from the Owner, design professionals, major equipment suppliers, and construction trades. The trades represented on the commissioning team shall include, but not be limited to, piping and fitting, Building Management System (BMS) (Division 23), equipment test and balance and electrical. The lead person for each trade who will actually perform or supervise the work is to be designated as the representative to the commissioning team. Responsibility for various steps of the commissioning process shall be divided among the members of the commissioning team, as described in this Section.

D. The Commissioning Authority, retained by the Owner, shall have responsibility for coordinating and directing each step of the commissioning process.

E. Plumbing system installation, start up, testing, balancing, preparation of O&M manuals, and operator training are the responsibility of the Division 22 Plumbing Contractors, with coordination, observation, verification and commissioning the responsibility of the Commissioning Authority. The commissioning process does not relieve Division 22 (Plumbing) from the obligations to complete all portions of the work in a satisfactory and fully operational manner.

F. Definitions
   1. Commissioning: The process of ensuring that systems are designed, installed, functionally tested and capable of being operated and maintained to perform in conformity with the design intent. For this project, the commissioning includes construction, start up, acceptance, and training.
   2. Commissioning Authority: The designated person, company, or agent, retained by the Owner, who implements the overall commissioning process.
   3. Commissioning Plan: A document defining the commissioning process, which is developed by the Commissioning Authority.
   4. Commissioning Report: The document that records the results of the commissioning process, including the as-built performance of the plumbing system and unresolved issues, and documents all sign-offs.

DocuSign Envelope ID: 330DEBD6-9A9E-4F34-BDCC-1AC1BAA701E9

5. Commissioning Specification: The Contract Document that details the objective, scope, and implementation of the construction and acceptance phases of the commissioning process as developed in the design-phase Commissioning Plan.
6. Commissioning Team: Those people responsible for working together in carrying out the commissioning process.
7. Design Intent: A detailed explanation of the ideas, concepts, and criteria that are defined by the Owner to be important. This typically is an expansion of the information provided in the Owner's Program.
8. Design Intent Document: A detailed written document, evolving throughout the commissioning process, clearly defining items and criteria of the design intent.
9. Functional Performance Testing (FPT): The process of determining the ability of the plumbing system to deliver domestic water, natural gas and sanitary storm and any other plumbing system in accordance with the final design intent.
10. Construction Documents: Design plans and specifications. Also referred to as Contract Documents.
11. Design Professional: The Owner's Architectural, Engineering and Other Consultants who prepared the Construction Documents.
12. TAB: Testing and Adjusting work.
13. Verification: That full range of checks and tests carried out to determine if all components, systems, sub-systems, and interfaces between systems operate in accordance with the Contract Documents. In this context, "operate" includes all modes and sequences of control operation, interlocks and conditional control responses, and specified responses to abnormal conditions.

G. Purpose: The commissioning is a process and its purpose is to:
1. Clearly document the design intent.
2. Verify that the systems installation and performance is in accordance with the plans, specifications and design intent.
3. Train the Owner's operators so that they fully understand the design intent and the operation and maintenance requirements of the equipment.

H. The work included in the commissioning process involves a complete and thorough evaluation of the operation and performance of all components, systems, and sub-systems. The following equipment and systems shall be evaluated:
1. Plumbing systems
2. Natural gas systems

I. Timely and accurate documentation is essential for the commissioning process to be effective. Documentation required as part of the commissioning process shall include but not be limited to:
1. Progress and status reports, including deficiencies noted
2. Minutes from all meetings
3. Pre-start, and start-up procedures
4. Training agenda and materials
5. As-built records
6. Commissioning report
7. Operational and Maintenance (O&M) manuals

J. Detailed testing shall be performed on all installed equipment and systems to ensure that operation and performance conform to the Contract Documents. All tests shall be witnessed by the Commissioning Authority. The following testing is required as part of the commissioning process:
1. Verification tests are comprised of a full range of checks and tests to determine that all components, equipment, systems, and interfaces between systems operate in accordance with the Contract Documents. This includes all operating modes, interlocks, control responses, and specific responses to abnormal or emergency conditions.
2. Functional performance testing shall determine if the plumbing system is providing the required services in accordance with the finalized design intent.

DocuSign Envelope ID: 330DEBD6-9A9E-4F34-BDCC-1AC1BAA701E9

K. Comprehensive training of O&M personnel shall be performed by the Plumbing Contractor, and where appropriate by other sub-contractors, and vendors prior to turnover of building to the Owner. The training shall include classroom instruction, along with hands-on instruction on the installed equipment and systems. All training sessions shall be videotaped or recorded on alternative audiovisual media.

1.2 RELATED DOCUMENTS

A. Parts 1 through 7 of the Special Previsions
B. Section 99-220501 – Plumbing General Provisions
C. Section 99-220548 – Vibration Isolation and Seismic Restraints for Plumbing
D. Section 99-220550 – Access Doors in General Construction for Plumbing
E. Section 99-220553 – Systems Identification for Plumbing
F. Section 99-226313 – Natural Gas Systems
G. Division 21 – Fire Protection Specifications
H. Division 23 – Mechanical Specifications
I. Division 26 – Electrical Specifications

1.3 REFERENCE STANDARDS

The following references are a guideline to the commissioning process and shall be applied as appropriate:

A. AABC – Associated Air Balance Council
   1. ACG Commissioning Guideline – 2005 – For Building Owners, Design Professionals and Commissioning Service Providers
B. ASHRAE – American Society of Heating, Refrigerating and Air-Conditioning Engineers
   1. ASHRAE Guideline 1.1 – 2007: HVAC&R Technical Requirements for the Commissioning Process
   2. ASHRAE Guideline 4 – 2008: Preparation of Operating and Maintenance Documentation for Building Systems
   3. The ASHRAE Handbook – HVAC Applications

1.4 QUALITY ASSURANCE

Commissioning Authority shall meet the following qualifications:

A. Commissioning Authority shall have a minimum of five (5) years of demonstrated experience in the commissioning of plumbing systems similar in size and complexity to this project.
B. Commissioning Authority shall hold a Certified Commissioning Professional (CCP) designation from the Building Commissioning Association.

1.5 SUBMITTALS

A. As-built records
B. Pre-test and Final Test Report Forms (forms format only) for each system and piece of equipment
C. Pre-test and Final Test Report Forms for each system and piece of equipment
D. Verification and functional performance testing procedures
E. Test and Balance report and verification datasheets
F. Commissioning Report
G. Operational and Maintenance (O&M) manuals

1.6 ROLES AND RESPONSIBILITIES

A. Contracting Officer is the Facility Engineering Dept.
   1. Contracting Officer will advise Commissioning Authority regarding changes in building occupancy and/or usage.

DocuSign Envelope ID: 330DEBD6-9A9E-4F34-BDCC-1AC1BAA701E9

2. Assign maintenance personnel and schedule them to participate in meetings, training session as follows:
   a. Construction-Phase coordination meeting
   b. Initial Owner training session at initial placement of major equipment
   c. Maintenance orientation and inspection
   d. Piping test and flushing verification meetings
   e. Procedures meeting for Testing, Adjusting and Balancing
   f. Owner's training session
   g. Verification demonstrations
   h. Final review at acceptance meeting
3. Provide qualified personnel for video taping and editing of training sessions.
4. Video tape construction process, hidden shafts, etc.
5. Provide any utilities required for the commissioning process.
6. Provide detailed program clearly stating the Owner's objectives, parameters, budgets, etc. for this facility.

B. Commissioning Authority
1. Develop the commissioning requirements and all related testing, verification and quality control sections.
2. Prepare the commissioning program required as part of the Commissioning Specification. Include lists of all contractors for commissioning events by name, firm, and trade specialty.
3. Develop detailed pre-test and final test reports forms, to be used by the Commissioning Authority for data recording purposes throughout the testing process. The Commissioning Authority shall specifically develop these forms for each system and piece of equipment installed on the project. All forms to be submitted for approval a minimum of one hundred and twenty (120) days prior to initial testing.
4. Execute the commissioning program, through organization of all tests, meetings, demonstrations, training events and performance verifications described in the Contract Documents and the approved commissioning program. Organizational responsibilities include preparation of agendas, attendance lists, arrangements for facilities and timely notification to participants for each commissioning event. The Commissioning Authority shall act as chairman at all commissioning events and assure the execution of all agenda items. The Commissioning Authority shall prepare minutes of every commissioning event and send copies to all those in attendance and the Owner within five (5) workdays of the event.
5. Review the Construction Documents which define the scope of the commissioning process and the final performance of the system. This includes verification that appropriate commissioning guidelines have been followed, and to document the performance of each piece of equipment and each system.
6. Review all approved submittals for coordination with the commissioning process and the performance testing of the systems.
7. Schedule regular Construction-Phase coordination meetings to include Owner and Contractor and Design Professional. These meetings shall be for the purpose of reviewing the complete commissioning program and establishing tentative schedules for plumbing system orientation and inspections, O&M submittals, training sessions, system flushing and testing, job completion, test, adjust and balance (TAB) work and verification and functional performance testing.
8. Schedule Owner training sessions so that they will be held at an appropriate timeframe relative to the turnover of the systems to the Owner. These sessions shall be attended by the Owner's O&M personnel, the Contractor, the Design Professional, and the Commissioning Authority. The Design Professional shall conduct this session giving an overview of the system, the system design goals and the reasoning behind the selection of the equipment.
9. Conduct and record the results of periodic inspections, undertaken by the Commissioning Authority, of work in progress to ensure that all systems are installed according to specifications. The Commissioning Authority shall note in writing any deficiencies discovered. Once the deficiencies have been corrected, as reported by the Contractor, the

DocuSign Envelope ID: 330DEBD6-9A9E-4F34-BDCC-1AC1BAA701E9

Commissioning Authority shall re-inspect the work and report that the corrections have been made.

10. Assist the Contractor in recommending solutions to minor deficiencies.
11. Conduct the system orientation and inspection following the initial training session. Any subsequent system orientation and inspection shall be conducted by the Contractor. The emphasis of this system orientation and inspection shall be an observation of the equipment location with respect to accessibility. Prepare minutes of this meeting, with separate summary of deficiency findings by the Owner and Commissioning Authority. Distribute to attendees and the Owner.
12. Adequate accessibility for maintenance and component replacement or repair is the Contractor's responsibility and shall be checked by the Commissioning Authority.
13. Receive and review the Operation and Maintenance (O&M) manuals as submitted by the Contractor (ensuring that they follow the specified outline and format), and as reviewed and approved by the Design Professional. Insert systems description as provided by the Design Professional.
14. Witness equipment and system start-up and testing. Ensure the results are documented (including a summary of deficiencies), and incorporated in the O&M manuals. The Commissioning Authority shall record all test results on pre-test and final test forms for each piece of equipment.
15. Prior to initiating the TAB work, meet with the Owner, Contractor, Design Professional, and TAB Contractor. The TAB Contractor shall outline TAB procedures and get concurrence from the Design Professional and Commissioning Authority. Ensure that the TAB Contractor has all forms required for the job database and understands their importance and use.
16. Schedule the O&M training sessions. All training sessions shall be on-site, except where otherwise specified. These training sessions are to be attended by the Owner, Commissioning Authority, Design Professional, Contractors and equipment suppliers as necessary. The format shall follow the outline in the O&M manuals. This system orientation and inspection should include hands-on training. The Commissioning Authority shall be solely responsible for recording all demonstration and training sessions on videotape, or alternative approved media, and furnish two (2) copies of the recording media to the Owner. Each session shall clearly reflect the content of each training session. Video tapes or other approved media and enclosures shall be neatly labeled.
17. Submit detailed verification test procedures and datasheets to the Design Professional for review.
18. Submit detailed FPT procedures to the Design Professional for review and acceptance.
19. Upon receipt of notification from the Design Professional that the systems have been completed and are operational, the Commissioning Authority shall proceed to verify the TAB report and operation of the control systems in accordance with the Commissioning Specification.
20. Conduct verification tests.
21. Record verification test data, and submit to the Design Professional for review and acceptance.
22. Provide detailed checklists datasheets to document verification tests.
23. Provide and install calibrated test instrumentation to monitor and record data as necessary.
24. Certify that the systems are ready for functional performance testing.
25. Observe and record functional performance tests.
26. Submit Functional Performance Test report to the Design Professional for review.
27. Re-test if performance deficiencies are found, corrected and additional testing is requested.
28. Review as-built drawings for accuracy with respect to installed systems. Review revisions to achieve accuracy.
29. Ensure that the O&M manuals and all other as-built records have been updated to include all modifications made during the Construction Phase.
30. Observe and record repeated functional performance tests to correct any performance deficiencies. Revise and re-submit the commissioning report.
31. Prepare the final commissioning report.

DocuSign Envelope ID: 330DEBD6-9A9E-4F34-BDCC-1AC1BAA701E9

32. Assemble the final project documentation, which shall include the commissioning report and all as-built records. Submit this documentation to the Design Professional for review and acceptance.
33. The Commissioning Authority shall verify that all O&M manuals, “as-built” documentation, and training manuals and training sessions are complete in every aspect and in accordance with the project specifications. The Commissioning Authority shall supplement the above documentation, as required, to make them complete.

C. Architect
1. Provide support to the Design Professional who must provide a service as a part of the commissioning process. This shall include providing adequate space for equipment installation and maintenance.
2. Conduct periodic inspections of work in progress to ensure that all systems and equipment are installed according to specifications.
3. Provide data on structure, building materials, interior finishes, and furnishings for their effect on the plumbing system.

D. Plumbing Design Professional
1. Provide documentation of initial design concepts and Design Intent on the Owner’s program.
2. Provide system design parameters and obtain approval of Owner.
3. Prepare Construction Documents incorporating the Commissioning Specification requirements and description of the system.
4. The Design Professional retains responsibility for the system evaluation, adequacy of the system to meet design intent, capacity of the system, quality control check or any of the other elements of the system design.
5. Participate in O&M personnel orientation and inspection at the final construction stage.
6. Attend initial meeting with TAB representative as scheduled by the Commissioning Authority.
7. Review verification and functional performance testing procedures submitted by the Commissioning Authority, for conformance with the Construction Documents.
8. Review TAB report and verification datasheets for system conformance to the Contract Documents. Issue to the Commissioning Authority a report noting deficiencies requiring correction.
9. Review Functional Performance Testing report for deficiencies in meeting the finalized design intent.
10. Review as-built records as required by the Contract Documents and turn them over to the Commissioning Authority for inclusion in final project documentation.
11. Review and comment on the final commissioning report.

E. Electrical Design Professional
1. Provide design narratives for electrical services to be provided for specific plumbing equipment requirements.
2. Provide electrical system information confirming compatibility with electrical service requirements specified by the plumbing design professional for all plumbing equipment and systems. Provide information necessary for the basis of design.
3. Prepare the Contract Documents that coordinate interfaces between life safety systems, BMS, and plumbing systems including commissioning specifications.
4. Attend Construction-Phase coordination meeting scheduled by the Commissioning Authority.
5. Participate in the start-up of plumbing equipment and systems.
6. Participate in the plumbing training sessions as required.
7. Participate in review of shop drawings for plumbing equipment.
8. Prepare electrical ladder wiring diagrams indicating power source connections to plumbing equipment and systems.
9. Prepare as-built electrical service record drawings as required by the Contract Documents.
10. Verify that any space requirements for electrical equipment are in accordance with relevant code requirements.
11. Participate in O&M personnel orientation and inspection sessions.

F. General Contractor
1. Include cost for commissioning requirements in the contract price.

DocuSign Envelope ID: 330DEBD6-9A9E-4F34-BDCC-1AC1BAA701E9

2. Coordinate construction progress with the commissioning schedule to assure that the building envelope and systems that affect proper operation and control of plumbing equipment and systems being tested are completed prior to testing.
3. Include commissioning requirements in the Plumbing, Electrical, and Division 23 (BMS) controls contracts, as well as all other sub-contractors, to ensure cooperation of all parties in the plumbing commissioning program.
4. Ensure acceptable representation, with the means and authority to prepare and coordinate execution of the plumbing commissioning program as described in the Contract Documents.
5. Issue a statement that TAB work has been completed, and submit the final TAB reports for review.
6. Issue a statement that control systems have been tested and calibrated.
7. Remedy deficiencies identified in verification tests.
8. Evaluate any performance deficiencies identified in the FPT report for non-performance with the Contract Documents.
9. The equipment supplier shall document the performance of their equipment. Performance testing shall be witnessed by the Commissioning Authority.

G. Plumbing Contractor
1. Include cost of commissioning requirements in the contract price.
2. Include requirements for submittal data, O&M data, and training in each purchase order or sub-contract written.
3. Ensure cooperation and participation of specialty sub-contractors such as testing, adjusting and balance (TAB).
4. Ensure participation of major equipment manufacturers in appropriate training and testing activities.
5. Attend Construction-Phase coordination meeting scheduled by the Commissioning Authority.
6. Assist the Commissioning Authority in all verification and functional performance tests.
7. Prepare preliminary schedule for plumbing system orientations and inspections, O&M manual submissions, training sessions, pipe system testing, flushing and cleaning, equipment start-up, TAB and task completion for use by the Commissioning Authority. Update schedule as appropriate throughout the construction period.
8. Attend initial training session.
9. Conduct plumbing system orientation and inspection at the equipment placement completion stage.
10. Update drawings to the record condition to date, and review with the Commissioning Authority.
11. Gather O&M data on all equipment, and assemble in binders as required by the Commissioning Specification and Section 99-220501 – Plumbing General Provisions. Submit to Commissioning Authority prior to the completion of construction.
12. Coordinate with the Commissioning Authority to provide sufficient advanced notice so that the witnessing of equipment and system start-up and testing can begin.
13. Notify the Commissioning Authority a minimum of two weeks in advance of the time for start of the TAB work. Attend the initial TAB meeting for review of the official TAB procedures.
14. Participate in, and schedule vendors and Contractors to participate in the training sessions as set up by the Commissioning Authority.
15. Provide written notification to the General Contractor and Commissioning Authority that the following work has been completed in accordance with the Contract Documents, and that the equipment, systems, and sub-system(s) are operating as required:
    a. Plumbing equipment including all controls, valves, and all other equipment furnished under this Division.
    b. Gas systems.
    c. Fire stopping in the fire-rated construction, including caulking, gasketing and sealing of smoke barriers.
    d. Pipe hangers.
    e. Vibration isolation and seismic restraints.

DocuSign Envelope ID: 330DEBD6-9A9E-4F34-BDCC-1AC1BAA701E9

16. The equipment supplier shall document the performance of their equipment. Performance testing shall be witnessed by the Commissioning Authority.
17. Provide a complete set of as-built records to the Commissioning Authority.

H. Test, Adjust, and Balance (TAB) Contractor
1. Include cost for commissioning requirements in the contract price.
2. Attend initial commissioning coordination meeting scheduled by the Commissioning Authority.
3. Submit the TAB procedures to the Commissioning Authority and Design Professional for review and acceptance.
4. Attend the TAB review meeting scheduled by the Commissioning Authority. Be prepared to discuss the procedures that shall be followed in testing, adjusting, and balancing the plumbing system.
5. Participate in training sessions as scheduled by the Commissioning Authority.
6. At the completion of the TAB work, and the submittal of the final TAB report, notify the Plumbing Contractor and the General Contractor.
7. Participate in verification of the TAB report, which will consist of repeating any selected measurement contained in the TAB where required by the Commissioning Authority for verification or diagnostic purposes.
8. The equipment supplier shall document the performance of their equipment. Performance testing shall be witnessed by the Commissioning Authority.

I. Equipment Suppliers and Miscellaneous Contractors
1. Include cost for commissioning requirements in the contract price.
2. Provide submittals, and appropriate O&M manual section(s).
3. Attend initial commissioning coordination meeting scheduled by the Commissioning Authority.
4. Participate in training sessions as scheduled by the Commissioning Authority.
5. Demonstrate performance of equipment as applicable.

J. Electrical Contractor
1. Include costs for commissioning requirements in the contract price.
2. Ensure participation in testing of equipment.
3. Ensure coordination, installation, and operation interfaces between heating, cable and plumbing systems.

1.7 DOCUMENTATION

The Commissioning Authority shall oversee and maintain the development of commissioning documentation. The commissioning documentation shall be kept in three-ring binders, and organized by system and sub-system when practical. All pages shall be numbered, and a table of contents page(s) shall be provided. The commissioning documentation shall include, but not be limited to, the following:

A. All accepted shop drawings of plumbing equipment. Shop drawings shall be full-size sheets folded as required to fit in binders.

B. All pre-functional performance test checklists, signed by indicating personnel, organized by system and sub-system.

C. All verification and functional performance test checklists/results, signed by indicated personnel, organized by system and sub-system.

D. Three copies of the operation and maintenance (O&M) manual(s) specified in other sections of these specifications shall be included with the commissioning documentation. The manuals shall be incorporated in the commissioning documentation prior to commencement of O&M training required in this and other sections of the specification. Preparation of O&M manuals shall be as specified in Section 99-220501 – Plumbing General Provisions, Paragraph 3.17 O&M Manuals.

DocuSign Envelope ID: 330DEBD6-9A9E-4F34-BDCC-1AC1BAA701E9

PART 2 - PRODUCTS

2.1 TEST EQUIPMENT

A. The appropriate Contractor(s) shall furnish all special tools and equipment required during the commissioning process. A list of all tools and equipment to be used during commissioning shall be submitted to the Commissioning Authority for approval.

B. The Owner shall furnish necessary utilities for the commissioning process.

2.2 TEST EQUIPMENT – PROPRIETARY

A. Proprietary test equipment and software required by any equipment manufacturer for programming and/or start-up, whether specified or not, shall be provided by the manufacturer of the equipment. Manufacturer shall provide the test equipment, demonstrate its use, and assist in the commissioning process as needed. Proprietary test equipment (and software) shall become the property of the Owner upon completion of the commissioning process.

PART 3 - EXECUTION

3.1 GENERAL

A. A pre-construction meeting of all commissioning team members shall be held at a time and place designated by the Owner. The purpose shall be to familiarize all parties with the commissioning process, and to ensure that the responsibilities of each party are clearly understood.

B. The Contractor shall complete all phases of work so the systems can be started, tested, balanced, and acceptance procedures undertaken. This includes the complete installation of all equipment, materials, pipe, wire, insulation, controls, etc. per the Contract Documents and related directives, clarifications, and change orders.

C. A Commissioning Plan shall be developed by the Commissioning Authority. The Contractor shall assist the Commissioning Authority in preparing the Commissioning Plan by providing all necessary information pertaining to the actual equipment and installation. If contractor-initiated system changes have been made that alter the commissioning process, the Commissioning Authority shall notify the Contracting Officer.

D. Acceptance procedures are normally intended to begin prior to completion of a system and/or sub-systems, and shall be coordinated with the Division 22 Plumbing Contractor. Start of acceptance procedures before system completion does not relieve the Contractor from completing those systems as per the schedule.

E. The Commissioning Authority shall develop a detailed schedule for acceptance procedures and training. The Commissioning Authority shall work in a cooperative manner with the Contractor to assure that the commissioning process does not interfere with the completion of work in accordance with the overall schedule.

3.2 PARTICIPATION IN ACCEPTANCE PROCEDURES

A. The Contractor shall provide skilled technicians to start up and debug all systems within Division 22 (Plumbing). These same technicians shall be made available to assist the Commissioning Authority in completing the commissioning program. Work schedules, time required for testing, etc. shall be requested by the Commissioning Authority and coordinated by the Contractor. Contractor shall ensure that the qualified technician(s) are available and present during the agreed-upon schedules and of sufficient duration to complete the necessary tests, adjustments, and/or problem resolutions.

B. System performance problems and discrepancies may require additional technician time, Commissioning Authority time, reconstruction of systems, and/or replacement of system components. The additional technician time shall be made available for subsequent commissioning periods until the required system performance is obtained.

C. The Commissioning Authority reserves the right to question the appropriateness and qualifications of the technicians relative to each item of equipment, system, and/or sub-system. Qualifications of

DocuSign Envelope ID: 330DEBD6-9A9E-4F34-BDCC-1AC1BAA701E9

technicians shall include expert knowledge relative to the specific equipment involved and a willingness to work with the Commissioning Authority. Contractor shall provide adequate documentation and tools to start up and test the equipment, systems, and/or sub-systems.

3.3 DEFICIENCY RESOLUTION

A. In some systems, improper adjustments, misapplied equipment, and/or deficient performance under varying loads will result in additional work being required to commission the systems. This work shall be completed under the direction of the Contracting Officer, with input from the Contractor, equipment supplier, and Commissioning Authority. Whereas all members shall have input and the opportunity to discuss, debate, and work out problems, the Contracting Officer shall have final jurisdiction over any additional work done to achieve performance.

B. Corrective work shall be completed in a timely fashion to permit the completion of the commissioning process. Experimentation to demonstrate system performance may be permitted. If the Commissioning Authority deems the experimentation work to be ineffective or untimely as it relates to the commissioning process, the Commissioning Authority shall notify the Contracting Officer, indicating the nature of the problem, expected steps to be taken, and suggested deadline(s) for completion of activities. If the deadline(s) pass without resolution of the problem, the Contracting Officer reserves the right to obtain supplementary services and/or equipment to resolve the problem. Costs incurred to solve the problems in an expeditious manner shall be the Contractor's responsibility.

3.4 ADDITIONAL COMMISSIONING

A. Additional commissioning activities may be required after system adjustments, replacements, etc., are completed. The Contractor(s), suppliers, and Commissioning Authority shall include a reasonable reserve to complete this work as part of their contractual obligations.

3.5 ACCEPTANCE PROCEDURES

A. Verification Tests

1. Scope
   a. Operating tests and checks to verify that all components, equipment, systems, sub-systems, and interfaces between systems operate in accordance with the Contract Documents. These tests are to include all operating modes, interlocks, specified control responses, specific responses to abnormal or emergency conditions and verifications of the proper response of the Building Automation System controllers and sensors.
   b. Verify the validity of the TAB report.
2. Participants

   The Commissioning Authority shall be responsible for preparing the scope of these tests. The Commissioning Authority shall schedule the tests and assemble the commissioning team members who shall be responsible for the tests. Participating contractors, manufacturers, suppliers, etc. shall include all costs to do the work involved in these tests in their proposals. Following is a list of tasks and supporting information that shall be required:

   a. Plumbing Contractor – Provide the services of technician(s) who is (are) familiar with the construction and operation of this system. Provide access to the contract plans, shop drawings, and equipment cutsheets of all installed equipment.
   b. Electrical Contractor – Provide a foreman electrician familiar with the electrical interlocks, interfaces with emergency power supply, and interfaces with alarm and life-safety systems. Provide access to the contract plans, and all as-built schematics of sub-systems, interfaces, and interlocks.
3. Documentation and Reporting Requirements
   a. Provide checklists for each component, piece of equipment, system, and sub-system, including all interfaces, interlocks, etc. Each item to be tested shall have a different entry line with space provided for comments. Separate checklists shall be prepared for

DocuSign Envelope ID: 330DEBD6-9A9E-4F34-BDCC-1AC1BAA701E9

each mode of operation. Provide space to indicate whether the mode under test responded as required or not. Also, provide space for all necessary parties to sign off on each checklist.

b. Datasheets used in verification of the proper operation of the control system shall include each controller to be verified, and its location. For each controller, provide space for recording the readout of the controller, the reading at the controller's sensor(s), and any comments. Also, provide space for all necessary parties to sign off on each checklist.

c. All test procedures and datasheets shall be submitted to the design professional for review and acceptance.

4. Instrumentation

a. The Commissioning Authority shall furnish all measurement instrumentation for the verification tests. All instruments will have calibrated within the six-month period prior to these tests.

5. Procedures

a. The Commissioning Authority shall direct and witness the verification operating tests and checks for all equipment and systems.

1) Set the system equipment (i.e. house pumps, booster pumps, water heaters) into the operating mode to be tested, i.e. normal shut down, normal auto position, normal manual position, unoccupied cycle, emergency power, and alarm conditions.

2) The Commissioning Authority shall inspect and verify the position of each device and interlock identified on the checklist. Each item shall be signed off as acceptable (yes), or failed (no).

3) This test shall be repeated for each operating cycle that applies to the plumbing system being tested.

4) Operating checks shall include all safety cutouts, alarms and interlocks with tank-filling systems during all modes of operation of the plumbing system.

5) If during a test an operating deficiency is observed, appropriate comments shall be added to the checklist datasheet.

6) Verification of the interface of the Building Management System and the TAB criteria shall be included.

7) Verification of the proper responses of Building Management System controllers and sensors shall be included.

b. The Commissioning Authority shall direct and witness the field verification of the final TAB report.

1) The Commissioning Authority shall select, at random, 10 percent of the report data for verifications.

2) The TAB Contractor shall be given sufficient advance notice of the date of field verification. However, they shall not be informed in advance of the data points to be verified. The TAB Contractor must use the same instruments (by model and serial number) that were used when the original data were collected.

3) Failure of an item is defined as:

a) For pressure reading, a deviation of 8 pounds.

b) For temperature reading, a deviation of 5 degrees F.

c) For all other readings, a deviation of more than 10 percent.

4) A failure of more than 10 percent of the selected items shall result in the rejections of the final TAB report.

c. If the deficiencies are identified during verification, the General Contractor must be notified, and action taken to remedy the deficiency. The final tabulated checklist datasheets shall be reviewed by the Design Professional and the Commissioning Authority, to determine if verification is complete, and the operating system is functioning in accordance with the Contract Documents.

DocuSign Envelope ID: 330DEBD6-9A9E-4F34-BDCC-1AC1BAA701E9

B. Functional Performance Testing
   1. Scope
      a. Functional performance tests shall determine if the plumbing system is providing the required capacity pressure and temperature services in accordance with the final design intent. Following is a test example:
         1) Determine the ability of the pumps to deliver the services to the distribution system, at the design water temperature and minimum pressure, and required static pressure.
   2. Submittals
      a. Detailed procedures for each series of tests shall be submitted to the Commissioning Authority for review and acceptance. The procedures shall include samples of the datasheets that will be part of the reports.
   3. Participants
      a. Participants in the functional performance tests shall be the same as those listed in the verification tests.
   4. Instrumentation
      a. In addition to the instrumentation requirements detailed under verification, the Commissioning Authority may need to provide data acquisition equipment to record data for the complete range of testing.
   5. Procedures
      a. The Commissioning Authority shall supervise and direct all functional performance tests.
      b. For each test, the Commissioning Authority shall install the measuring instruments and logging devices to record test data for the required test period. The instrumentation shall monitor and record all operating conditions to allow for complete evaluation of the test results.
      c. Measurement will be required to allow for calculation of total capacity of the system for each mode of operation under test.
   6. Documentation and Reporting Requirements
      a. All measured data, datasheets, and a comprehensive summary, describing the operation of the plumbing system at the time of testing, shall be submitted to the Commissioning Authority.
      b. A preliminary Functional Performance Test report shall be prepared by the Commissioning Authority and submitted to the Design Professional for review. Any identified deficiencies need to be evaluated by the Design Professional and Construction Manager to determine if they are part of the Contractor's contractual obligations. Construction deficiencies shall be corrected by the responsible Contractor(s) and the specific functional performance test repeated.
      c. If it is determined that the plumbing system is constructed in accordance with the Contract Documents, and the performance deficiencies are not part of the Contract Documents, the Contracting Officer must decide whether any required modifications needed to bring the performance of the plumbing system up to the finalized design intent shall be implemented, or if the test shall be accepted as submitted. If corrective work is performed, the Contracting Officer shall determine if a portion or all required functional performance tests should be repeated, and a revised report submitted.

3.6 OPERATING AND MAINTENANCE MANUAL

A. The operating and maintenance manual shall consist of binders (as described in Section 99-220501 – Plumbing General Provisions for Plumbing, Paragraph 3.17 O&M Manuals) with 8.5-inch by 11-inch sheets.

3.7 OPERATING AND MAINTENANCE TRAINING

A. The Plumbing Contractor, and appropriate sub-contractors, shall provide comprehensive operating and maintenance instruction on building systems in accordance with the Contract Documents prior

DocuSign Envelope ID: 330DEBD6-9A9E-4F34-BDCC-1AC1BAA701E9

to delivery. The instruction shall include classroom instruction delivered by competent instructors based upon the contents of the operating manual.

B. Each classroom training period shall be followed by an inspection, explanation and demonstration of the system concerned by the instructors. All specified equipment shall be started up and shut down, with the exception of any connection to fire suppression system.

C. The Contractor shall be responsible for organizing, arranging, and delivering in a manner and on a schedule agreeable to the Contracting Officer.

D. The Contractor shall provide, at or before substantial completion, a proposed agenda and schedule of the above training for approval by the Commissioning Authority and the Contracting Officer.

E. Each classroom training session and demonstration shall be recorded on videotape or alternative acceptable media and submitted to the Contracting Officer.

F. The Plumbing Contractor shall provide a letter of certification to the Project Representative stating that project site training session(s) of at least two (2) hours duration were conducted for this project for the Sub-contractor's supervisory and installing personnel.

END OF SECTION

DocuSign Envelope ID: 330DEBD6-9A9E-4F34-BDCC-1AC1BAA701E9

SECTION 99-221100

DOMESTIC WATER SYSTEMS

PART 1 - GENERAL

1.1 WORK INCLUDED

A. General – Provide complete and operable domestic water systems within the intent of the Contract Documents; including but not limited to all materials and labor for complete installation and testing, in compliance with applicable provisions and recommendations in the Reference Standards.

B. Water service contract limit line shall be five feet from building wall or as indicated on the Drawings.

C. Make arrangements to provide domestic water services into this project.

D. The Contractor shall pay all connection fees, tap charges, and permit fees if any assessed by local authorities.

1.2 RELATED DOCUMENTS

A. Section 99-220501 – Plumbing General Provisions

B. Section 99-220516 – Expansion Compensation for Plumbing

C. Section 99-220529 – Supports, Hangers, Anchors and Sleeves for Plumbing

D. Section 99-220548 – Vibration Isolation and Seismic Restraints for Plumbing

E. Section 99-220550 – Access Doors in General Construction for Plumbing

F. Section 99-221110 – Plumbing Piping and Accessories

G. Section 99-224000 – Plumbing Fixtures

1.3 REFERENCE STANDARDS

Published specifications standards, tests or recommended methods of trade, industry or governmental organizations apply to work in this Section where cited below:

A. AGA – American Gas Association

B. ANSI – American National Standards Institute
   1. the ANSI/AWWA C100/A21 series of standards for Ductile-Iron Pipe and Ductile-Iron and Gray-Iron Fittings for Water, Waste Water and Reclaimed Water Systems

C. ASME – American Society of Mechanical Engineers
   1. ASME A112.1.2 – 2004 – Air Gaps in Plumbing Systems (For Plumbing Fixtures and Water-Connected Receptors)
   2. ASME B16.10 – 2000 Revised 2003 – Face to Face and End to End Dimensions of Valves
   3. ASME B16.18 – 2001 Revised 2005 – Cast Copper Alloy Solder Joint Pressure Fittings
   4. ASME B16.22 – 2001 Revised 2005 – Wrought Copper and Copper Alloy Solder-Joint Pressure Fittings
   5. ASME B16.24 – 2006 – Cast Copper Alloy Pipe Flanges and Flanged Fittings, Classes 150, 300, 400, 600, 900, 1500 and 2500
   6. ASME B16.34 – 2004 – Valves – Flanged, Threaded and Welding End
   7. ANSI/ASME B31.1 – 2007 Revised 2008 – Power Piping
   8. ASME B31.9 – 2008 – Building Services Piping

D. ASSE – American Society of Sanitary Engineering
   1. ASSE 1010-2004 – Performance Requirements for Water Hammer Arresters
   2. ASSE 1011-2004 – Performance Requirements for Hose Connection Vacuum Breakers
   3. ASSE 1017-2003 revised 2004 – Performance Requirements for Temperature Actuated Mixing Valves for Hot Water Distribution Systems
   4. ASSE 1018-2001 – Performance Requirements for Trap Seal Primer Valves – Potable Water Supplied
   5. ASSE 1020-2004 – Performance Requirements for Pressure Vacuum Breaker Assembly

DocuSign Envelope ID: 330DEBD6-9A9E-4F34-BDCC-1AC1BAA701E9

E. ASTM – American Society for Testing and Materials
   1. ASTM B16 / B16M – 2005 – Standard Specification for Free-Cutting Brass Rod, Bar and Shapes for Use in Screw Machines
   2. ASTM B32 – 2008 – Standard Specification for Solder Metal
   3. ASTM B62 – 2009 – Standard Specification for Composition Bronze or Ounce Metal Castings
   4. ASTM B88 – 2003 – Standard Specification for Seamless Copper Water Tube
   5. ASTM B813 – 2009 – Standard Specification for Liquid and Paste Fluxes for Soldering of Copper and Copper Alloy Tube

F. AWWA – American Water Works Association
   1. AWWA C104/A21.4 – 2008 – Cement-Mortar Lining for Ductile-Iron Pipe and Fittings for Water
   2. AWWA C105/A21.5 – 2005 – Polyethylene Encasement for Ductile-Iron Pipe Systems
   3. AWWA C110/A21.10 – 2008 – Ductile-Iron and Gray-Iron Fittings
   4. AWWA C111/A21.11 – 2007 – Rubber-Gasket Joints for Ductile-Iron Pressure Pipe and Fittings
   5. AWWA C116/A21.16 – 2003 – Protective Fusion-Bonded Epoxy Coatings for the Interior and Exterior Surfaces of Ductile-Iron and Gray-Iron Fittings for Water Supply Service
   6. AWWA C150/A21.50 – 2008 – Thickness Design of Ductile-Iron Pipe
   7. AWWA C151/A21.51 – 2002 – Ductile-Iron Pipe, Centrifugally Cast, for Water
   8. AWWA C153/A21.53 – 2006 – Ductile-Iron Compact Fittings for Water Service
   9. AWWA C509 – 2001 – Resilient-Seated Gate Valves for Water Supply Service
   10. AWWA C510 – 2007 – Double Check Valve Backflow Prevention Assembly
   11. AWWA C651 – 2005 – Disinfecting Water Mains

G. AWS – American Welding Society
   1. AWS A5.8/A5.8M – 2004 – Specification for Filler Metals for Brazing and Braze Welding

H. FM – Factory Mutual Approvals LLC

I. MSS – Manufacturers Standardization Society of the Valve and Fittings Industry
   1. MSS SP-70-2006 – Gray Iron Gate Valves, Flanged and Threaded Ends
   2. MSS SP-80-2008 – Bronze Gate, Globe, Angle and Check Valves

J. NSF – National Sanitation Foundation
   1. NSF/ANSI 61, Edition 08 – Drinking Water System Components – Health Effects

K. PDI – Plumbing and Drainage Institute
   1. PDI WH201 – 2006 – Water Hammer Arresters

L. UL – Underwriters Laboratories Inc.

M. USC's FCCC – Foundation for Cross-Connection Control and Hydraulic Research

N. California Code of Regulations, Title 24 – Building Standards Code (The 2013 triennial edition)

O. California Plumbing Code – 2013

1.4 QUALITY ASSURANCE

A. Comply with the applicable provisions and recommendations of the standards and codes listed in Paragraph 1.03 Reference Standards and the requirements of the listed related documents in 1.02 Related Documents.

B. Valves construction shall be suitable for the pressure, temperature, and fluid quality of the service in which they are to be used.

C. All valves shall be manufactured in accordance with ANSI, AWWA, ASTM, MSS-SP-70 & 80 (Manufacturers Standardization Society of the Valve and Fittings Industry), standards and specifications.

D. ANSI/ASME B31.1 for power piping valves and ASME B31.9 for building services piping valves.

E. ASME 16.10 and ASME 16.34 for dimension and design criteria.

F. NSF Compliance – NSF 61 for valve materials for potable-water service.

DocuSign Envelope ID: 330DEBD6-9A9E-4F34-BDCC-1AC1BAA701E9

G. Minimum test pressure for all valves shall be 1.5 times maximum system working pressure unless noted otherwise.

1.5 SUBMITTALS

A. For each type of valve indicated, submit body, seating, and trim materials; valve design; pressure and temperature classifications; end connections; arrangement; dimensions; and required clearances. Include list indicating valve and its application. Include rated capacities; pressure differential range, shipping, installed, and operating weights; furnished specialties; and accessories.

B. Submit a schedule of all major control valves for review and acceptance, complete with all pertinent data, such as manufacturer, catalog number, cold water working pressure, etc.

C. Product Data – Submit manufacturer's latest information on construction details, rated capacity data, operating characteristics and installation data.

D. Submit, for all equipment provided under this Section, dimensions, accessories, required clearances, electrical requirements and wiring diagrams specific to this project that clearly differentiate between manufacturer-installed and field-installed wiring and location and size of all required field connections.

E. Submit manufacturer's installation instructions, operation data, start-up instructions, maintenance data, parts list and controls specific to this project, accessories, and maintenance data.

F. Submit Domestic Water System cleaning and flushing test report.

G. Submit Domestic Water System chlorine residues and bacteriological samples testing.

H. Submit Operational and Maintenance (O&M) manuals.

PART 2 - PRODUCTS

2.1 ACCEPTABLE MANUFACTURERS

A. Following is a list of manufacturers whose products may be submitted for review. All items submitted as being equal shall have same quality, finish, free area, material construction, etc., as those specified under base Specification.

B. Approved Manufacturers:
   1. Copper Piping – Cambridge-Lee, Cerro, Howell Metal, Wolverine, or approved equivalent.
   2. Copper Fittings – NIBCO, Elkhart, or approved equivalent.
   3. Gate Valves – Jenkins, Crane, Kennedy, NIBCO, Stockham, or approved equivalent.
   4. Ball Valves and Check Valves – Conbraco, NIBCO, Stockham, Watts Industries, or approved equivalent.
   5. Stop and Drain Valves – Conbraco (Apollo), or approved equivalent.
   6. Strainers – "Y" Type – Conbraco (Apollo), Watkins, or approved equivalent.
   7. Strainers – "Plate" Type – Badger, or approved equivalent.
   8. Vacuum Breakers – Atmospheric Type – Watts Industries, Wilkins, or approved equivalent.
   9. Air Gap Fittings – MIFAB, or approved equivalent.
   10. Brazing Alloys and Fluxes – Harris Products Group, Canfield, or approved equivalent.

2.2 PIPING AND FITTINGS

A. Buried Piping Systems 3 inches and smaller:
   1. Piping – Type "K" Tubing ASTM B88 – seamless copper water tube.
   2. Fittings:
      a. Cast copper alloy complying with ASME B16.18.
      b. Wrought copper solder type pressure fittings complying with ASME B16.22.
   3. Field wrap with 50-mil PVC tape or factory-applied PVC coating.
   4. Joints – Brazed using AWS A5.8/A5.8M, AWS BCuP Series, copper-phosphorus alloys, unless otherwise indicated; equivalent to:
      a. "Stay- Silv 15" by Harris Products Group
      b. "Sil Can 15" by Canfield

DocuSign Envelope ID: 330DEBD6-9A9E-4F34-BDCC-1AC1BAA701E9

B. Above-Grade Piping Systems:
   1. Piping – Type “L” tubing ASTM B88 – seamless copper water tube.
   2. Fittings:
      a. Cast copper alloy complying with ASME B16.18.
      b. Wrought copper solder type pressure fittings complying with ASME B16.22.
      c. Class 150, flat-faced, flanges complying with ASME B16.24.
   3. Joints:
      a. ½ inch to 1.5 inches – Soldered using ASTM B32, lead-free alloys. Include water-flushable flux according to ASTM B813. 100 percent lead free, 95 percent tin and 5 percent antimony composition, silver bearing solders, unless otherwise indicated; equivalent to:
         1) “Silverflo” by Canfield
         2) “Bridgit” by Harris Products Group

2.3 VALVES

A. General Characteristics – Provide valves with screwed or flanged ends as required by the piping system in which they are installed and as specified. All valves shall have the name of the manufacturer and working pressure cast or stamped thereon.

B. Shut-off Valves – 2 inches and smaller size:
   1. Ball Valve – Bronze body, full port, 3-piece, extended handles that allow operation of the valve without breaking the vapor seal or disturbing the insulation, Type 316 stainless steel ball and stem, in-line repairable, rated for 600 psi non-shock WOG, TFE seats and seals, blowout-proof stem design, adjustable packing nut, extended solder connections and designed for soft solder and brazing installations; “S-595-Y-66” by NIBCO, “Apollo 82-240 Series” by Conbraco, or approved equivalent.

C. Check Valves:
   1. Swing Type – 2 inches and smaller – Bronze body ASTM B62, Y-Pattern swing-type, threaded ends, manufactured in accordance with MSS SP-80, Class 125, with TFE seat disc; “S413-Y” by NIBCO, or approved equivalent.

D. Balancing Valves:
   1. Bronze body, Y-Pattern multi-turn 360-degree adjustment with a micrometer type indicator located on valve handwheel, hidden memory feature which provides locking valve position after system is balanced, metering ports with Nordel check valves and gasketed caps located on both sides of valve seat; “Model CBV” by Armstrong, B&G Circuit Setter Plus, Taco Accu-Flo, Tour & Andersson STAS/STAD, Victaulic Series 786/787, or approved equivalent.

E. Stop and Drain Valves – Bronze body, full port, ASTM B16/B16M, chrome plated bronze ball, in-line repairable, rated for 400 psig WOG, TFE seats and seals, blowout-proof stem design, adjustable packing nut, drain cap, latch lock lever, sweat ends and designed for soft solder and brazing installations; “Apollo 95 Series” by Conbraco, or approved equivalent.

2.4 DOMESTIC WATER SYSTEM MISCELLANEOUS COMPONENTS

A. Shock Absorbers:
   1. Pre-charged sealed air chamber, piston type arrester, with EPDM “O”-rings in seamless copper tube chamber lubricated by FDA-approved silicone compound, meeting or exceeding PDI Standard WH201, ASSE Standard 1010, and ANSI A112.26.1M.
   2. Properly sized and selected per PDI Standard WH201 and having sufficient displacement volume to dissipate the calculated kinetic energy generated by the piping system in accordance with PDI sizing guidelines.
   3. Accessories – Air gap copper air gap fitting complete with a male ½-inch NPT fitting at the inlet supply incorporating a stream directing nozzle, a female ½-inch NPT outlet, and a 1-inch vertical air gap, conforming to ASME A112.1.2 Air Gaps in Plumbing Systems Standard; “MI-GAP” by MIFAB, or approved equivalent.

DocuSign Envelope ID: 330DEBD6-9A9E-4F34-BDCC-1AC1BAA701E9

2.5 BACKFLOW PREVENTERS

A. Vacuum Breakers:
   1. Atmospheric Type – Interior hose threads; “Series 8B” by Watts, “Series BFP-8” by Wilkins, or approved equivalent.
   2. Pressure Type – Sized to match line size, internally loaded check valve and loaded air inlet valve opening to atmosphere on discharge side of check valve with ball valves, bronze body construction, tight seating rubber discs, and ball type test cocks factory-installed on vacuum breaker, meeting requirements of USC’s FCCC & HR Manual, Sec. 10, ASSE 1020 and CSA B64 Series 07, B64.1.2; “Model Series 40-500” by Conbraco, “Model Series 720-A” by Wilkins, or approved equivalent.

PART 3 - EXECUTION

3.1 APPLICATIONS

A. Piping:
   1. Provide unions at connections to each piece of equipment for easy dismantling and at such other points to facilitate installation. Unions shall be of same strength and manufacturer as used in the respective piping systems, and shall be of the ground joint type as specified in specification Section 99-221110 – Plumbing Piping and Accessories.

B. Shut-off Valves:
   1. Provide shut-off valves for all water supplied, equipment and fixtures, and devices which do not have supply stop or integral isolation valves provided with equipment or fixtures.
   2. Provide shut-off valves and capped outlets in water piping, as required and where indicated for future extension to equipment and fixtures provided under other Sections of the work.
   3. Provide shut-off valves at connections in water piping for the work of other trades, within two feet of their related equipment.
   4. Coordinate and include as part of this work final connections with applicable trade.
   5. Provide shut-off valves on each water riser.
   6. Provide shut-off valves for each shock absorber installation.
   7. accordance with the regulations and requirements of that department.

C. Shock Absorbers:
   1. Provide shock absorbers in the piping systems and adjacent to all pieces of equipment wherein quick-closing valves are installed.
   2. Shock absorbers shall be properly sized and selected per PDI Standard WH201 and having sufficient displacement volume to dissipate the calculated kinetic energy generated by the piping system. Install all units in a vertical position.
   3. Provide access panels with Allen wrench key lock for each arrester.
   4. Install shock absorbers as close as possible to inlet side of quick closure valves and devices.
   5. Do not install shock absorber at greater than 90-degree angle from vertical position.

3.2 INSTALLATION

A. Piping:
   1. Minimum cover on underground water piping shall be 3 feet, 0 inches below final grade.
   2. Carry headers for groups of fixtures full size throughout their length.
   3. All domestic water piping shall be arranged to drain to low points and to provide for air elimination at high points.
   4. Mains, risers and branch connections to mains shall be arranged to permit expansion and contraction and seismic movement without strain by means of elbow swings and/or expansion joints and seismic movement.
   5. All cut and threaded pipe shall have the cutting burrs and sharp edges reamed out. In erecting pipe, friction wrenches and risers shall be used exclusively, and any pipe cut, dented or otherwise damaged shall be replaced.
   6. All ferrous to non-ferrous pipe connections shall be made with accepted dielectric pipe or flange union isolating joints to prevent any electrolytic action between dissimilar metals.

DocuSign Envelope ID: 330DEBD6-9A9E-4F34-BDCC-1AC1BAA701E9

7. All copper tubing shall be cut and reamed to remove all burrs. Outside and inside of the fittings and outside of the tubing at each end shall be well cleaned with steel wool before soldering to remove all traces of oxidation regardless of how clean the surfaces of the pipe and fittings may appear.
8. Nipples – Any piece of pipe 8 inches in length and less shall be considered a nipple. All nipples with unthreaded portion 1.5 inches and less shall be extra heavy. All other nipples to be of weight corresponding to fitting connected. Only shoulder nipples shall be used; closed nipples will not be acceptable.
9. Supports for vertical piping shall be double bolt riser clamps (consistent with pipe material, i.e., copper for copper pipe) with each end having equal bearing on the building structure. Refer to Section 99-220529 – Supports, Hangers, Anchors and Sleeves for Plumbing.
10. Support piping for copper piping in accordance with Section 99-220529 – Supports, Hangers, Anchors and Sleeves for Plumbing.
11. Install piping for copper piping in accordance with Section 99-221100 – Plumbing Piping and Accessories.

B. Valves:
1. Arrange and orientate valves, check valves, pressure-reducing valves, shock absorbers, trap primer valves, etc., in manner accessible for maintenance and/or removal.
2. Provide shut-off valves for cold water branches serving more than two fixtures.
3. Install standard weight or extra-heavy weight valves in conformity with the requirements for water piping fittings as specified.
4. Provide valves with soldered, screwed or flanged ends as required by the piping system in which they are installed and as specified.
5. Provide shut-off valves for all plumbing equipment, fixtures, and fixture trim, which do not have supply stop or integral isolation valves included.

3.3 – TESTING AND ADJUSTMENTS

A. Provide, in written format, testing information including date of testing, starting pressure, pressure after test and length of test, pressure loss after test and witnesses present.

B. During the progress of the work, test the domestic water systems including fixture roughing-in sections as directed to permit general construction and building-in of rough work to proceed. Test entire piping systems or in sections after rough piping systems are installed where deemed advisable to meet construction schedule and sequencing of other work. Such tests shall be made in the presence of the Owner's Representative, Building Department Inspectors and any other Authorities Having Jurisdiction. A minimum of 48-hours' notice shall be given to the Architect prior to any testing.

C. The Contractor shall provide all apparatus, temporary work or any other requirements necessary for such tests and shall take all due precautions to prevent damage to the Building or its contents. If damage occurs, the Contractor shall repair and remedy all damages made without cost to the Owner.

D. Any defects or deficiencies discovered as a result of tests shall be immediately repaired and tests repeated until the test requirements are fully complied with. Retest piping section which fails tests until successful tests results are obtained. No caulking of pipe joints to remedy leaks shall be permitted.

E. Backfill trench between joints before testing to prevent movement of pipe during tests. Expose joints to detect visible leaks. Sufficiently harden thrust blocks prior to tests. Fill pipe with water for minimum 24 hours prior to applying test pressure to stabilize system.

F. The domestic water supply system shall be tested to a hydraulic pressure equal to 1.5 times the normal operating pressure, but no less than 125 pounds per square inch before being enclosed and before non-conducting covering is applied. Do not connect fixtures, equipment and solenoid valves into system during this test. All leaks or defects indicated by tests shall be repaired or replaced with new material, as directed by the Architect, and test repeated until all defects are removed. Disconnect apparatus for developing required pressures during stated periods. After

DocuSign Envelope ID: 330DEBD6-9A9E-4F34-BDCC-1AC1BAA701E9

fixtures are connected, test system for 2 hours at 75 psig or prevailing water pressure, whichever is higher.

G. Do not cover or conceal plumbing system or portion of plumbing system until after testing and approval by jurisdictional authority. Expose systems that has been covered or concealed before testing or inspection and retest.

3.4 DISINFECTION/CLEANING

A. Do not open valves separating new piping and existing water systems until piping tightness tests, flushing and disinfection has been completed. Provide temporary test valves piping and drain components to accomplish disinfection and cleaning.

B. Record flushing information including date of flushing, volume of flushing, length of time and witnesses present. Flush piping systems in accordance with the following:

1. Domestic Water – 3 inch and smaller pipe size:
   a. Prior to testing, flush piping with clean water until clean water free of silt or grit is observed for at least one minute, for specific pipe size.
   b. Flow rates per pipe size shall be as follows:

gpm	for pipe size (in inches)
220	3
150	2.5
100	2
55	1.5
40	1.25
25	1
16	¾
8	½

C. Disinfection of Potable Water Systems – Comply with local requirements, where local code requirements are more stringent. Provide necessary labor, equipment, material and test kits for chlorine application and tests. Make all arrangements with jurisdictional water authority for witnessing chlorination and tests of proper disinfection. The Contractor shall pay all fees and costs including water sample testing.

D. Interior Water Piping – Sterilize all parts of building water services system with water solution containing 50 parts per million of available chlorine for at least a 24-hour contact period. After contact period, flush all parts of system with clear water until system tests at no more than 0.2 ppm residual chlorine.

END OF SECTION

DocuSign Envelope ID: 330DEBD6-9A9E-4F34-BDCC-1AC1BAA701E9

SECTION 99-221110

PLUMBING PIPING AND ACCESSORIES

PART 1 - GENERAL

1.1 WORK INCLUDED

A. The work of this Section shall include, but is not limited to, the following:
   1. Piping
   2. Fittings
   3. Jointing Materials
   4. Unions and Couplings
   5. Mechanically Coupled Pipe
   6. Welding and Jointing Procedures
   7. Cleaning of Piping Systems
   8. Testing of Piping Systems

1.2 RELATED DOCUMENTS

A. Section 99-211319 – Fire Protection Systems
B. Section 99-212000 – Fire Suppression Systems
C. Section 99-220501 – Plumbing General Provisions
D. Section 99-220516 – Expansion Compensation for Plumbing
E. Section 99-220529 – Supports, Hangers, Anchors and Sleeves for Plumbing
F. Section 99-220548 – Vibration Isolation and Seismic Restraints for Plumbing
G. Section 99-220553 – Systems Identification for Plumbing
H. Section 99-220700 – Insulation for Plumbing
I. Section 99-221100 – Domestic Water Systems
J. Section 99-221300 – Drainage Systems

1.3 REFERENCE STANDARDS

Published specifications standards, tests or recommended methods of trade, industry or governmental organizations apply to work in this Section where cited below:

A. ANSI – American National Standards Institute
   1. ANSI/ASME B1.20.1 – 1983: Pipe Threads, General Purpose (Inch)
   2. ANSI/ASME B1.20.2M – 2006: Pipe Threads 60-deg., General Purpose(Inch)
   3. ANSI/ASME B31.1 – 2007: Power Piping
B. ASME – American Society of Mechanical Engineers
   1. ASME Standard for Boiler and Pressure Vessel Code – 2007
      a. ASME BPVC – Section IX – Welding and Brazing Qualifications
   2. ASME B16.3 – 2006: Malleable Iron Threaded Fittings, Classes 150 and 300
   3. ASME B16.4 – 2006: Gray Iron Threaded Fittings, Classes 125 and 250
   4. ASME B16.5 – 2009: Pipe Flanges and Flanged Fittings, NPS ½ through NPS 24 (Metric/Inch Standard)
   5. ASME B16.18 – 2001 Revised 2005: Cast Copper Alloy Solder Joint Pressure Fittings
   6. ASME B16.21 – 2005: Nonmetallic Flat Gaskets for Pipe Flanges
   7. ASME B16.22 – 2001 Revised 2005: Wrought Copper and Copper Alloy Solder-Joint Pressure Fittings
   8. ASME B16.24 – 2006: Cast Copper Alloy Pipe Flanges and Flanged Fittings, Classes 150, 300, 400, 600, 900, 1500 and 2500
   9. ASME B16.26 – 2006: Cast Copper Alloy Fittings for Flared Copper Tubes
   10. ASME B16.34 – 2004: Valves – Flanged, Threaded and Welding End
   11. ASME B31.9 – 2008: Building Services Piping

DocuSign Envelope ID: 330DEBD6-9A9E-4F34-BDCC-1AC1BAA701E9

C. ASTM – American Society of Testing and Materials
   1. ASTM A53/A 53M – 2007: Standard Specification for Pipe, Steel, Black and Hot-Dipped, Zinc-Coated, Welded and Seamless
   2. ASTM A106/A 106M – 2008: Standard Specification for Seamless Carbon Steel Pipe for High-Temperature Service
   3. ASTM A120 – 1984: Specification for Pipe, Steel, Black and Hot-Dipped, Zinc-Coated (Galvanized), Welded and Seamless for Ordinary Uses
   4. ASTM A153/A 153M – 2005 Revised 2009: Standard Specification for Zinc Coating (Hot-Dip) on Iron and Steel Hardware
   5. ASTM A181/A 181M – 2006: Standard Specification for Carbon Steel Forgings, for General-Purpose Piping
   6. ASTM A182 – 2008: Standard Specification for Forged or Rolled Alloy and Stainless Steel Pipe Flanges, Forged Fittings, and Valves and Parts for High-Temperature Service
   7. ASTM A183 – 2003 Revised 2009: Standard Specification for Carbon Steel Track Bolts and Nuts
   8. ASTM A312 – 2008: Standard Specification for Seamless, Welded, and Heavily Cold Worked Austenitic Stainless Steel Pipes
   9. ASTM A536 – 1984 Revised 2008: Standard Specification for Ductile Iron Castings
   10. ASTM B32 – 2008: Standard Specification for Solder Metal
   11. ASTM B43 – 1998 Revised 2004: Standard Specification for Seamless Red Brass Pipe, Standard Sizes
   12. ASTM B62 – 2009: Standard Specification for Composition Bronze or Ounce Metal Castings
   13. ASTM B88 – 2003: Standard Specification for Seamless Copper Water Tube
   14. ASTM B813 – 2009: Standard Specification for Liquid and Paste Fluxes for Soldering of Copper and Copper Alloy Tube
   15. ASTM B828 – 2002: Standard Practice for Making Capillary Joints by Soldering of Copper and Copper Alloy tube and Fittings
   16. ASTM D1330 – 2004: Standard Specification for Rubber Sheet Gaskets

D. AWS – American Welding Society
   1. AWS A5.8/A5.8M – 2004: Specification for Filler Metals for Brazing and Braze Welding
   2. AWS B2.1/B2.1M – 2009: Specification for Welding Procedure and Performance Qualification
   3. AWS C3.4M/C3.4 – 2007: Specification for Torch Brazing
   4. AWS D10.12M/D10.12 – 2000: Guide for Welding Mild Steel Pipe

E. AWWA – American Water Works Association
   1. AWWA C105/A21.5 – 2005: Polyethylene Encasement for Ductile-Iron Pipe Systems
   2. AWWA C106/A21.6 – 2000: Cast-Iron Pipe Centrifugally Cast in Metal Molds
   3. AWWA C111/A21.11 – 2007: Rubber-Gasket Joints for Ductile-Iron Pressure Pipe and Fittings

F. ISO – International Organization for Standardization
   1. ISO 9001, 4th Edition – 2008: Quality Management System Requirements

G. UL – Underwriters Laboratories Inc.

H. CCR – California Code of Regulations
   1. Title 24 – Building Standards Code

I. California Plumbing Code – 2013

J. Uniform Plumbing Code – 2012

K. Local Codes and Standards

1.4 QUALITY ASSURANCE

A. Comply with the applicable provisions and recommendations of the standards and codes listed in Paragraph 1.03 and the requirements of the listed related documents.

B. Welding materials and labor to conform to ASME Code and applicable state Labor Regulations.

DocuSign Envelope ID: 330DEBD6-9A9E-4F34-BDCC-1AC1BAA701E9

C. All welders shall be certified by ANSI/ASME B31.1 “Power Piping” or “Qualification Tests” in Section IX of the ASME Boiler and Pressure Vessel Code: Welding and Brazing Qualifications.

D. Each length of pipe, fitting, trap, fixture or device used in any piping system shall be stamped or indelibly marked with type, weight, quality and manufacturer’s name or mark.

1.5 SUBMITTALS

A. Submit the following for review:
   1. Product Data: Submit manufacturer’s latest information on construction details, rated capacity data, operating characteristics and installation data.
   2. Submit, for all equipment provided under this Section, dimensions, accessories, required and clearances specific to this project that clearly differentiates between manufacturer-installed and field-installed wiring and location and size of all required field connections.
   3. Submit manufacturer’s installation instructions, operation data, maintenance data, parts list and controls specific to this project, accessories and maintenance data.
   4. Submit schedule indicating the ANSI, ASME, ASTM, AWWA Standard Specification number of the pipe being proposed along with its type and grade and sufficient information to indicate the type and rating of fittings for each service.
   5. Submit shop drawings indicating anchoring details, anchor points, guide details, etc.
   6. Submit manufacturer’s data for strainers and fittings.
   7. Submit dimensioned drawings locating pipe penetrations through walls, slabs and other structural elements, anchor and guide locations, etc.
   8. Submit pipe expansion and flexibility calculations.
   9. Submit test reports on all systems tested. Tests required by Authorities Having Jurisdiction over the work shall be submitted on appropriate forms to the satisfaction of such authorities.

PART 2 - PRODUCTS

2.1 ACCEPTABLE MANUFACTURERS

A. Strainers:
   1. Y-type and Basket: Mueller Steam Specialty, Muessco, Spirax-Sarco, Bailey Div. of CMB Industries, Zurn Industries, Victaulic Company (all grooved end strainers)
   2. Tee Type Grooved End: Victaulic Company (all grooved end strainers)
   3. Basket Type: Viking

B. Welding Fittings: Hackney, Bonney Forge Foundry (Weld-o-lets), Weldbend

C. Mechanical Couplings and Fittings: Victaulic Company, Anvil International Gruvlok

D. Stainless Steel Pressed Fittings: Victaulic Company, Viega

E. Dielectric Fittings:
   1. Unions: Watts, Perfection, Central Plastics, EPCO, Zurn, Hart
   2. Insulating Flanges: Watts, Capital, Central Plastics, EPCO, Walter Vallett Co., V-Line
   3. Flange Kits: Calpico, Central Plastics, Advanced Plastics
   4. Couplings: Calpico, Lochinvar
   5. Nipples: Perfection, Sioux Chief, Victaulic Company

F. Flange Gaskets: John Crane, Garlock, Manville, Goodrich

G. Cleaning of Piping Systems: Use chemicals as recommended by the water treatment specialist engaged under Section 99-232500: Water Treatment

H. Testing of Piping Systems: American Gas and Chemicals “Leak-Tee”, Cosgille Scientific “Sho Gas”, Flamort Chemical “Detect-A-Leak”, Highside Chemicals “Leak Finder Foam”

2.2 PRESSURE PIPING AND FITTINGS

A. Pressure piping shall conform to requirements of ANSI/ASME B31.1 Power Piping. Pressure ratings herein are steam, unless specifically designated as “WOG” (Water, Oil or Gas) or “WWP” (Water Working Pressure).

DocuSign Envelope ID: 330DEBD6-9A9E-4F34-BDCC-1AC1BAA701E9

B. Black Steel, Threaded, 2 inches and smaller: Schedule 40, ASTM A120 or ASTM A53/A 53M:
   1. Cast iron banded fittings, ASME B16.4, 125 pound class.
   2. Malleable iron, ASME B16.3, 150 pound class.

C. Galvanized Steel, Threaded: Schedule 40, ASTM A120 or ASTM A53/A 53M:
   1. Fittings: Where weld fittings or mechanical grooved fittings are used, use only long radius elbows having a centerline radius of 1.5 pipe diameters:
      a. Threaded, galvanized malleable iron fittings and ground-joint unions, ASME B16.3, 150 pounds per square inch class, 2 inches and smaller.
      b. Cast iron flanges and flanged fittings ASME B16.1 125 pounds per square inch class, at values and piping specialties 2.5 inches and larger.

D. Copper Tubing: ASTM B88:
   1. Wrought copper, solder joint fittings, ASME B16.22, in sizes available with AWS A5.8/A5.8M or ASTM B32 filler metals per Article 2.4, C.
   2. Cast bronze solder-joint fittings, ASME B16.18, only in sizes not available in wrought copper.
   3. Cast bronze, threaded, ground-joint unions, ASME B16.18, 2 inches and smaller.
   4. Cast bronze, flanged unions, ASME B16.24, 150 pounds per square inch class, 2.5 inches and larger.
   5. Copper tubing flared fittings: Bronze castings for flared type joints, ASME B16.26.
   6. Medical gas piping shall be especially cleaned, dehydrated and capped in accordance with NFPA 99.
   7. Grooved end copper fittings conforming to ASME B16.18 and ASME B16.22, and couplings conforming to ASTM A536. Copper tubing dimensioned. Flaring of tube or fitting ends is not permitted.

E. Brass:
   1. Standard weight and red brass pipe, 85 percent copper, 15 percent zinc, ASTM B43.
   2. 125 pounds per square inch threaded brass fittings, ASME B16.15.

F. Cast Iron, Mechanical – Joints:
   1. AWWA C104/A21.4, AWWA C106/A21.6.
   2. 150 pounds per square inch class.
   3. Centrifugally cast, coated, cement lined.
   4. Mechanical-joints, AWWA C111/A21.11.

G. Cast Iron, Flanged: AWWA C104/A21.4, AWWA C106/A21.6, 150 psi class:
   1. Centrifugally cast, coated, cement lined.
   2. Cast iron flanges and flanged fittings, ASME B16.1, 125 pounds per square inch class.
   3. Flanges integrally cast for long straight pipe runs.
   4. Flanges may be threaded in areas requiring many fittings. Where field joints require close dimensional tolerance for make-up length of piping.

2.3 JOINING MATERIALS

A. Flange gaskets shall be rated ASME B16.21, non-metallic, flat, asbestos-free full faced or flat ring type to suit flange facings. Selected from one of the following materials:
   1. General service, water, $^{1}/_{16}$-inch thick, non-asbestos. Crane Style 333, or approved equal.
   2. Gaskets shall be coated with thread lubricant when being installed.

B. Pipe threads shall be ANSI/ASME B1.20.1.

C. Flange bolts and nuts shall be rated ASME B18.2.1, carbon steel.

D. Solder Filler Metals: ASTM B32, lead-free alloys. Include water-flushable flux according to ASTM B813.
   1. 100 percent lead free, silver bearing solders; equivalent to:
      a. “Silverflo” by Canfield
      b. “Bridget” by Harris Products Group
   2. 95 percent tin and 5 percent antimony composition.

DocuSign Envelope ID: 330DEBD6-9A9E-4F34-BDCC-1AC1BAA701E9

E. Brazing Filler Metals:
   1. General Duty: AWS A5.8/A5.8M, BCuP Series, copper-phosphorus alloys; unless otherwise indicated, equivalent to:
      a. “Stay-Silv 15” by Harris Products Group
      b. “Sil Can 15” by Canfield

F. Welding Filler Metals: Comply with AWS D10.12M/D10.12 for welding materials appropriate for wall thickness and chemical analysis of steel pipe being welded.

2.4 UNIONS

A. Steel Piping 2 inches and smaller: ASME B16.3 malleable iron unions with brass seats. Use unions of a pressure class equal to or higher than that specified for the fittings of the respective piping service but not less than 250 pounds square inch, ground joint.

B. Copper Piping: Nibco No. 633.

2.5 DIELECTRIC FITTINGS

A. Unions:
   1. 1.25 inches and smaller: EPCO Model FX, or approved equal:
      a. 250 pounds per square inch WOG
      b. Provide standard gaskets for plumbing
      c. Female pipe thread by solder end connections, non-asbestos gaskets, having a minimum pressure rating of 250 psig at not less than the design operating temperature of the fluid being conveyed
      d. Clearflow dielectric waterways
   2. 1.5 inches and larger: EPCO Model X, or approved equal:
      a. Brass half-union, ASME B16.1, 175 pounds per square inch WOG
      b. Clearflow dielectric waterways
      c. Steel weld neck by copper solder joint end connections, non-asbestos gaskets, having a minimum pressure rating of 125 psig at not less than the design operating temperature of the fluid being conveyed

B. Insulating Flanges:
   1. Dielectric-Flange Kits: Provide companion-flange assembly for field assembly. Include flanges, full-face- or ring-type neoprene or phenolic gasket, phenolic or polyethylene bolt sleeves, phenolic washers, and steel backing washers.
   2. Provide separate companion flanges and steel bolts and nuts, 150 or 300 psig minimum working pressure where required to suit system pressures.
   3. 2 inches and smaller: Walter Vallett Company, V line, or approved equal.

C. Couplings: Provide galvanized-steel coupling with inert and non-corrosive, thermoplastic lining, threaded ends and 300-psig minimum working pressure at 225 degrees F.

D. Nipples: Provide electroplated steel nipple with inert and non-corrosive, thermoplastic lining; plain, threaded, or grooved ends; and 300-psig minimum working pressure at 225 degrees F.

2.6 MECHANICALLY COUPLED GROOVED END PIPING SYSTEM

A. Provide mechanically coupled grooved end fittings and pipe similar to Victaulic roll grooved products manufactured under ISO 9001 certification.

B. The following services may use mechanical grooved pipe connections within the building in mechanical spaces and above accessible ceilings, and in other locations as approved by the Engineer. Mechanical shafts and chases are not considered accessible.
   1. Domestic cold water

C. Piping Components:
   1. Grooved couplings shall consist of two pieces of ductile or malleable iron housings. Coupling gaskets shall be a synthetic rubber gasket with a central cavity pressure responsive design. Coupling bolts and nuts shall be heat-treated carbon steel, trackhead conforming to physical properties of ASTM A183. Use Style 77 couplings for all joints within

DocuSign Envelope ID: 330DEBD6-9A9E-4F34-BDCC-1AC1BAA701E9

10 feet of riser connections. Grooved fittings, couplings, valves and gaskets must be manufactured under ISO 9001.
Reducing couplings are not acceptable.

2. Make full size branch connections for piping 2.5 inches and larger with manufactured grooved end tees. Branch connections for less than full size shall be made with hole cut products. Style 920 or Style 921 branch connections with locating collar engaging into hole or Style 72 outlet coupling used to joint grooved pipe and to create a branch connection. Provide gaskets for branch connection using Grade "E" EPDM Compound with working temperature of minus 30 degrees F to plus 230 degrees F. Gaskets must be ISO 9001 certified. Gaskets shall be provided by the same manufacturer that provides the coupling housing.
3. Provide flanges for all connections to flanged components as follows:
   a. Style 741 (2 inches or larger) for connection to ANSI Class 125 and 150 flanged components
   b. Style 743 (2 through 12 inches) for connection to ANSI Class 300 flanged components
4. Provide full-flow cast fittings, manufactured under ISO 9001 with grooves to accept grooved end couplings as recommended by the manufacturer:
   a. Standard Fittings: Cast or ductile iron conforming to ASTM A536 (Grade 65-45-12), painted with a rust-inhibiting modified vinyl alkyd enamel or hot-dip galvanized to ASTM A153/A 153M or zinc electroplated to ASTM B633, as required
   b. Standard Steel Elbow Fittings (14-24 inches): Forged steel conforming to ASTM A106/A 106M, Grade B (0.375 inch wall) painted with rust-inhibiting modified vinyl alkyd enamel or hot-dip galvanized to ASTM A153/A 153M
   c. Standard Segmentally Welded Fittings: Factory fabricated, by fitting manufacturer, of carbon and steel pipe as follows:
      ¾ to 4 inches conforming to ASTM A53/A 53M, Type F;
      5 to 6 inches Schedule 30 conforming to ASTM A53/A 53M, Type E or S, Grade B;
      8 to 12 inches Schedule 30 conforming to ASTM A53/A 53M, Type E or S, Grade B, painted with rust-inhibiting modified vinyl alkyd enamel or hot-dip galvanized ASTM A153/A 153M, as required.
   d. Mechanical-Tee: Style 920 fittings with ductile or malleable iron housings may be used for up to 2-inch outlet size.

2.7 STRAINERS

A. Provide screwed ends up to 2-inch size, flanged or grooved end 2.5-inch and larger.

B. Body:
   1. Up to 150 pounds per square inch – Y-type: Ductile or cast iron body; bolted, coupled or threaded screen retainer tapped for a blow-off valve; threaded body in sizes through 2-inch and rated at not less than 175 psi WOG; flanged or grooved end body in sizes over 2-inch and rated at not less than 125 psi WOG at 230 degrees F. Cast iron body with clamped cover, tapped for a blow-off valve; 125 psig flanged body for 2.5-inch and larger.
   2. Up to 150 pounds per square inch – Basket type: Cast iron body with clamped cover; body tapped for a blow-off valve; 125 psig flanged body for 2.5-inch and larger.
   3. Over 150 pounds per square inch – Y type: Ductile or cast iron or cast steel body; stainless steel screens; bolted, coupled or threaded screen retainer tapped for a blow-off valve; threaded or socket weld body in sizes through 2-inch and rated at not less than 300 psi WOG at 150 degrees F; flanged, grooved end or butt weld body in sizes over 2-inch and rated at not less than 300 psi WOG at 150 degrees F.

C. Strainer screen shall be Type 316 stainless steel or monel, reinforced, with free area not less than 2.5 times inlet area.
   1. Perforations:
      a. Water:
         1) Up to 2-inch: $^{1}/_{32}$ inches

D. Y-Type:
   1. Screwed: Faced cap, straight thread and gasket; Muessco No. 11M, or approved equal

DocuSign Envelope ID: 330DEBD6-9A9E-4F34-BDCC-1AC1BAA701E9

2. Flanged: Bolted cover; Muessco No. 751 or No. 752, or approved equal

E. Basket Type: Bolted cover, bottom drain connection.
1. Up to 6-inch: Provide cast iron or steel body with bolted cover, stainless steel ball valve and integral mechanism to permit servicing without interrupting flow; Muessco 792FD, or approved equal.
2. 8-inch and larger: Diverting type, cast iron body with stainless steel basket and integral mechanism to permit servicing without interrupting flow; Zurn Series 570, or approved equal.

F. Grooved End Type: Wye type grooved joint for vertical or horizontal installation with blow-off plug.

PART 3 - EXECUTION

3.1 APPLICATION

A. In addition to applicable portions of the PART 3, refer to the following specification sections for installation, testing and cleaning requirements for specific piping systems identified in these sections.
1. Section 99-220529 – Supports, Hangers, Anchors and Sleeves for Plumbing
2. Section 99-221100 – Domestic Water Systems
3. Section 99-221300 – Drainage Systems

3.2 INSTALLATION

A. General:
1. Except as otherwise indicated, protect piping as specified below:
   a. Allowance for thermal expansion and contraction shall be provided for piping passing through a wall, floor, ceiling or partition by wrapping with an approved tape or pipe insulation, and by installing through an appropriately sized sleeve to allow for thermal movement.
   b. No ashes, cinders, refuse, stones, boulders or other materials that can damage or break the piping or promote corrosive action shall be used in backfilling any trench or excavation in which piping is installed.
2. Install piping at indicated slope free of sags, bends, and kinks. Install components having pressure rating equal to or greater than system operating pressure. Support all piping per Section 99-220529 – Supports, Hangers, Anchors and Sleeves for Plumbing.
3. Brace all piping per Section 99-220548 – Vibration Isolation and Seismic Restraints for Plumbing.
4. Clean off scale, rust and dirt, inside and outside, before assembly. Remove welding slag or other foreign material from piping.
5. Install (at traps, etc., and wherever else directed) approved unions, to permit easy connection and disconnection.
6. Use main sized saddle type branch connections for directly connecting branch lines to main piping lines in steel piping if main is at least one pipe size larger than the branch for up to 6-inch main. Do not project branch pipes inside the main pipe.
7. Cap all openings in pipes during progress of the work.
8. Do not connect bottom of pipe risers until riser is complete. Rod or tap to clear loose material before making bottom connection.
9. Correct leaks in piping immediately using new materials. Leak-sealing compounds or peening is not permitted.
10. Install drains throughout the systems to permit complete drainage.
11. Not acceptable: mitered ells, bullhead tees, notched tees, bushings on threaded piping.
12. Do not allow any other subcontractor (electrical, telephone company, elevator, etc.) to electrically ground to any plumbing system.
13. Install cast-iron sleeve with water stop and mechanical sleeve seal at each service pipe penetration through foundation wall. Select number of interlocking rubber links required to make installation watertight. Encase underground piping with polyethylene film according to ASTM A674 or AWWA C105/A21.5.

DocuSign Envelope ID: 330DEBD6-9A9E-4F34-BDCC-1AC1BAA701E9

B. Arrangement:
   1. Except for large scale details, piping is diagrammatically indicated. Install generally as shown.
   2. Do not scale the Drawings for exact location of piping.
   3. Install piping to best suit field conditions and coordinate with other trades.
   4. Piping arrangement: Arrange piping along walls in horizontal groups in an organized, orderly, well executed manner. Each group shall be in one plane if possible. Maintain required slope.
   5. Do not sleeve structural members without consent of Architect.
   6. Maintain 1-inch clearance from adjacent work, including insulation, except as noted or approved.
   7. Install piping concealed above as high as possible above ceilings or in walls unless otherwise indicated. Install all piping parallel to building walls and ceilings and at heights that do not obstruct any portion of a window, doorway, stairway, or passageway. Where interferences develop in the field, offset or reroute piping as required to clear such interferences. In all cases, consult drawings for exact location of pipe spaces, ceiling heights, door and window openings, or other architectural details before installing piping.

C. Expansion, Contraction and Bending:
   1. Install piping with provisions for expansion and contraction and seismic movement. Provide expansion loops, swing joints, anchors and/or expansion joints and seismic joints where indicated or otherwise required so that piping may expand and contract and allow seismic movement without damage to itself, equipment, or building.
   2. Do not spring or force piping during installation.
   3. Do not bend piping without use of pipe bending machine.
   4. Refer to Section 99-220516 – Expansion Compensation for Plumbing.

D. Sloping, Air Venting and Draining:
   1. Slope piping as indicated, true to line and grade, and free of traps and air pockets.
   2. Unless otherwise indicated, slope piping in direction of flow as follows:

Service	**Inclination in Direction of Flow**	**Slope**
Sanitary Sewer:		
2.5 inch and smaller	Down	¼ inch per foot

   3. Make changes in direction for storm piping using appropriate branches, bends, and long-sweep bends. Do not change direction of flow more than 90 degrees. Use proper size of standard increasers and reducers if pipes of different sizes are connected. Reducing size of drainage piping in direction of flow is prohibited.
   4. Lay buried building drain piping beginning at low point of each system. Install true to grades and alignment indicated, with unbroken continuity of invert. Place hub ends of piping upstream. Install required gaskets according to manufacturer's written instructions for use of lubricants, cements, and other installation requirements. Maintain swab in piping and pull past each joint as completed.
   5. Reducers:
      a. Concentric:
         1) In vertical piping
         2) May be used as increasers in horizontal piping
   6. Provide drain valves and hose adapters at all low points in piping.
   7. Provide drain valves for float type controllers.
   8. Provide manual air vents at all high points in water piping:
      a. ¼-inch copper tube
      b. Discharge vented water into nearest janitor's sink or floor drain
      c. If no fixture is near provide 180-degree bend to discharge into portable container

DocuSign Envelope ID: 330DEBD6-9A9E-4F34-BDCC-1AC1BAA701E9

E. Strainers:
   1. Install at following locations:
      a. Ahead of control and regulating valves
      b. Elsewhere as indicated on the Drawings
   2. In water service, up to 250 degrees F maximum; and compressed air:
      a. Install globe valve for blow-off with full outlet size and same pressure rating as piping system.
      b. Hose-end fittings are acceptable for water service only.

F. Copper:
   1. Crimping of copper tubing prohibited.
   2. Isolate copper pipe and tubing from contact with ferrous materials.
   3. For branch drops and rises to plumbing fixtures, anchor branch to wall with drop-ear ell or tee.
   4. Remove all slivers and burrs remaining from the cutting operation by reaming and filing both pipe surfaces. Clean fitting and tube with emery cloth or sandpaper. Remove residue from the cleaning operation, apply flux, and assemble joint. Use 95-5 solder or brazing to secure joint as specified for the specific piping service.

G. Coatings: Reapply mastic coating on buried piping, after installation, to surfaces from which coating has been removed or scraped.

H. Care of Floors:
   1. Do not set pipe vises or threading machines on unprotected concrete floors.
   2. Cover floor when making plumbing connections to avoid staining floors with oil, white or red lead or other substances. Bear cost of removing any stains.

3.3 SYSTEMS INSTALLATION

A. Underground Pipe Wrap:
   1. Provide for all underground metallic piping that is not encased in a non-metallic conduit and for underground metallic gas conduit.
   2. Remove all dirt and other foreign material from exterior of pipe. Apply primer as recommended by the manufacturer.
   3. Use a spiral wrap process for applying tape to the pipe. Repair any breaks in the tape coating caused by the installation process.

B. Underground Piping:
   1. Install piping where indicated and according to manufacturer's instructions.
   2. Install closures at points of field joints between straight units or fabricated fittings by welding them centrally over conduit ends between such adjacent units.
   3. After welding, conduct a 25 psig air pressure test on the outer casing and examine for leaks with a soap solution.
   4. Repair any leaks and re-test until the system is airtight at 25 psig air pressure for a two-hour period.
   5. Clean closures of all welding slag, burned coating, mud, etc. by wire brushing.
   6. Finish coat in accordance with the system manufacturer's instructions, using materials supplied. Final outside coating to be subjected to a spark test and be capable of maintaining dielectric strength at 5,000 volts.
   7. Contractor shall furnish all necessary equipment and labor to perform the spark test and the air test, including air compressor, gauges, conduit caps, temporary pipe and connections, etc., and complete the tests to the satisfaction of the Architect.

3.4 PIPE JOINTING

A. Fittings:
   1. Provide standard, manufactured fittings in all cases.
   2. Prohibited fittings:
      a. Field fabricated
      b. Bushings on pressure piping

DocuSign Envelope ID: 330DEBD6-9A9E-4F34-BDCC-1AC1BAA701E9

c. Clamp-on branch connections

3. Dielectric separation:
   a. Provide insulating couplings or dielectric fittings at all connections or metal-to-metal contact of ferrous materials to non-ferrous materials.
   b. Locations shall be accessible. Coordinate with General Contractor.
4. Branch connections, steel piping:
   a. Equal to main and to two pipe sizes smaller: weld tees, same weight as piping.
   b. Three or more pipe sizes smaller than main, but 2.5 inches and larger: Bonney Weld-o-lets.
   c. To two inches and smaller: Bonney Weld-o-lets, Thread-o-lets, threaded Nip-o-lets, or steel couplings.

B. Unions: Provide unions or flanges to render all items in systems easily removable, including:
   1. Valves
   2. Where indicated on the Drawings

C. Pipe Ends: Perform pipe cutting and end preparation to result in clean ends with full inside diameter. Grind and ream ends of pipe and tube and remove burrs to restore full inside diameter.

D. Nipples: Provide extra heavy pipe for nipples where unthreaded portion is less than 1.5 inches long. Close nipples not permitted.

E. Threaded Joints: Ream threaded pipe ends to remove burrs and restore full inside diameter. Join pipe fittings and valves as follows:
   1. Note the internal length of threads in fittings or valve ends, and proximity of internal seat or wall, to determine how far pipe should be threaded into joint.
   2. Apply appropriate tape or thread compound to external pipe threads (except where dryseal threading is specified).
   3. Align threads at point of assembly.
   4. Tighten joint with wrench and back-up wrench as required.
   5. Damaged threads: Do not use pipe or pipe fittings having threads that are corroded or damaged.
   6. Sealed with sealant compounds or teflon tape. Hard setting pipe thread cement or caulking shall not be allowed.
   7. Sealant compounds: John Crane or Rector Seal:
      a. General service: John Crane JC-40
      b. Chemicals and corrosive service piping: John Crane JC-30

F. Flanged Joints: Align flange surfaces parallel. Select appropriate gasket material, size, type, and thickness for service application. Install gasket concentrically positioned. Assemble joints by sequencing bolt tightening to make initial contact of flanges and gaskets as flat and parallel as possible. When required, use suitable lubricants on bolt threads. Tighten bolts gradually and uniformly using a torque wrench.

G. Mechanical Joints: Grooved copper tube and grooved-tube fitting joints shall be assembled with coupling, gasket, lubricant, and bolts per coupling and fitting manufacturer's standard written procedure. Grooved ends on copper and copper alloy tube shall be roll-formed only using the appropriate roll-groove tool to construct a groove meeting the coupling and fitting manufacturer's written specifications. Cut grooving methods shall not be used on copper and copper alloy tube.

H. Flared tube Joints: Flared copper tube joints shall be made by the appropriate use of cast copper alloy fittings conforming to ASME B16.26. Flared ends of copper tube shall be of the 45-degree flare type and shall only be made with a flaring tool designed specifically for that purpose. Copper alloy tube shall be reamed to remove burrs and restore full inside diameter prior to forming the flared end.

I. Welded Joints:
   1. Where required, peen and wheel-grind welds.
   2. Ends of pipe may be burned for welding:
      a. Grind, bevel and remove scale between welding joint.

DocuSign Envelope ID: 330DEBD6-9A9E-4F34-BDCC-1AC1BAA701E9

b. Ragged edges with metal beads, poor alignment or other inferior work shall be rejected.
c. Preparation of pipe ends: For wall thickness up to $^{3}/_{16}$-inch, ends shall be finished square or with 37.5-degree bevel with a $^{1}/_{16}$ inch band; for wall thickness $^{3}/_{16}$-inch to ¾-inch inclusive, ends shall be machined or ground to have a 37.5-degree bevel with a $^{1}/_{16}$-inch band per latest edition of ANSI/ASME B31.1.

3. Perform welding with oxyacetylene or electric arc process.
4. Welding shall be from outside only on pipe configurations.
5. Tack welds shall be of same quality as required in the completed weld and shall be visually examined for defects before applying any complete passes. The ends (starts and stops) of the tacks shall blend in smoothly with the base metal so that subsequent passes can be applied without interruption.
6. Inspection: Visual inspection shall be done by the welder after each pass.
7. Inspection Criteria: Cracks, cold laps, open porosity and tungsten inclusions shall not be allowed. If the above occurs, the weldment shall be removed and rewelded per this specification. Weld beads shall be applied in such a manner that they are smooth into adjacent beads and the base metal with no areas, such as crevices, undercuts, or overlaps, that would weaken the structure or prevent adequate penetration of subsequent weld passes. Undercut of the final pass, which reduces the initial material thickness, shall be repaired by additional welding.
8. Repair: All materials welded using this procedure or which fall within the requirements of this procedure may also be repair-welded using this procedure.

J. Grooved End Joints:
1. Pipe Preparation: The pipe ends must be clean from indentations, projections and roll marks in the area from pipe end to groove for proper gasket sealing. The dimensions must be according to the standard roll groove specifications as recommended by the manufacturer. Cut grooves are not acceptable.
2. Pipe Preparation Plain End: Black pipe must be thoroughly cleaned down to bare metal for one-inch from the pipe end to receive mechanically coupled fittings; removed pipe coatings, mill scale, rust and raised weld beads.
3. Tighten all nuts to assure firm metal contact of the coupling pads.
4. Groove width depth and outside diameter must conform to the standard groove specifications in the latest “Field Assembly and Installation Instruction Pocket Handbook”.
5. Before assembly of couplings, lightly coat pipe ends and outside of gasket with cup grease or graphite paste to facilitate installation.
6. Support branch pipes independently to eliminate stress on coupled joint.
7. Determine that gasket material and lubricant are compatible with service of pipe.
8. Hammer welds to remove slag and weld beads.

K. Soldered and Brazed Joints: Construct soldered joints per ASTM B828. Construct brazed joints per AWS C3.4M/C3.4.
1. Install solder-joint to male-thread adapters, or solder-joint to male-thread unions meeting the requirements of ASME B16.18 or ASME B16.22, adjacent to each threaded valve and threaded equipment connection in a copper tube system.
2. Install ASME B16.24 cast copper alloy pipe flanges adjacent to each flanged valve and flanged equipment connection in a copper tube system.
3. Provide brazing for refrigerant piping system using AWS A5.8/A5.8M, BAg-1 with 15 percent silver, 80 percent copper and 5 percent phosphorous.
4. Provide solder joint for building domestic cold water and domestic hot water supply and return systems.
5. Clean surfaces to be jointed of oil, grease, rusts and oxides.
   a. Remove grease from fittings by washing in solution of $^{1}/_{16}$ sodium carbonate and three gallons hot water.
   b. Clean socket of fitting and end of pipe thoroughly with emery cloth to remove rust and oxides. After cleaning and before assembly or heating, apply Handy or Aircosil flux to joint surface and spread evenly.

DocuSign Envelope ID: 330DEBD6-9A9E-4F34-BDCC-1AC1BAA701E9

6. Any joints showing evidence of overheating, cracking, poor penetration, or other defects of fit-up or workmanship shall be replaced as directed by the Architect at the Contractor's expense.

3.5 CHEMICAL CLEANING

A. General:
   1. During construction:
      a. Keep openings in piping closed to prevent entrance of foreign matter.
      b. Clean pipe, fittings and valves internally.
      c. Hammer welds to remove slag and weld beads.
   2. After completion of pressure testing, chemically clean internally each domestic water piping system.
   3. Proceed with chemical cleanout within four (4) hours of completion of pressure testing.

B. Domestic Water Systems:
   1. Upon start-up, flush and then fill with clean water, and vent as required.

C. Disinfect water systems. For requirements, refer to Section 99-221100 – Domestic Water Systems. Protect against damage from freeze-up or discharge of water.

3.6 FIELD QUALITY CONTROL

A. General:
   1. Any deviation from the cleaning, installation, testing, and certification requirements herein shall be approved in writing by the Architect.
   2. All materials and workmanship shall be subject to inspection and examination by the Architect at any place where fabrication or erection occurs.
   3. The Architect reserves the right to reject all or any part of the system that does not conform to the requirements herein. Rejected materials or equipment shall be returned at the Contractor's expense for re-cleaning and certification.
   4. The Architect reserves the right to remove random samples of the installed work sufficient to establish the quality of materials and workmanship. If such samples indicate materials and workmanship do not meet the contract specification, the Contractor shall be required to replace or re-clean the installed work at no expense to the Owner. The Owner shall reimburse the Contractor on a time and materials basis for such work if the system proves to be installed to specification.
   5. All testing shall be done in the presence of the Owner's Representative.
   6. Upon completion of this work, all systems shall be adjusted for use. Should any piece of apparatus or any material or work fail in any of the required pressure tests, it shall be immediately removed and replaced by new materials. The defective portion of the work shall be replaced by new materials. The defective portion of the work shall be replaced by the Contractor in the presence of the Owner at no expense to the Owner.
   7. Test gauges shall be installed and test medium source connections shall be made to convenient process connections. After completion of testing, the gauges and source connection shall be removed and the specified process attachments replaced.
   8. Any leaks found shall be repaired in the following manner:
      a. Welded joint – Grind out defect and re-weld.
      b. Brazed and/or Soldered joint – Cut out and re-braze/solder.
      c. Screw joint – Taken apart and re-do (do not use compound).

B. Test Preparation:
   1. Clean new piping internally by flushing with water before the application of pressure tests, and before the performance of disinfection procedures as specified in Section 99-221100.
   2. Block off and isolate plumbing fixtures during the preliminary flushing and draining process.
   3. Thoroughly flush piping with water under pressure, clear of foreign matter, and then drain before proceeding with pressure testing. Blow down accumulations of grit, dirt and sediment at each strainer and each low point in the piping systems.
   4. Leaks and Defects:
      a. Repair or replace as directed.

DocuSign Envelope ID: 330DEBD6-9A9E-4F34-BDCC-1AC1BAA701E9

   b. Repair damage caused by test failure without additional cost.
   c. Re-test repaired and/or damaged systems until tests are accomplished successfully.
5. Refer to other sections and divisions for tests to plumbing systems and other special piping systems.
6. Notify Architect in writing one week before test.
7. Maintain a log book of all pressure tests showing dates, personnel performing test, test observer and test results.
8. Furnish written report and certification that tests have been satisfactorily completed.

C. Pressure Tests:
1. Less than 100 pounds per square inch operating pressure: Test hydrostatically to 150 pounds per square inch.
2. Over 100 psi operating pressure:
   a. Test hydrostatically to 1.5 times operating pressure.
   b. Never exceed test pressure ASME B16.1 basis.
3. With system valves capped and pressure apparatus disconnected, a 4-hour duration pressure test shall exhibit:
   a. No pressure change (zero).
   a. Compensate for temperature change.
4. For air tests, gradually increase the pressure to not more than one half of the test pressure; then increase the pressure in steps of approximately one-tenth of the test pressure until the required test pressure is reached. Examine all joints and connections with a soap bubble solution or equivalent method. The piping system exclusive of possible localized instances at valve packing shall show no evidence of leaking.
5. Testing Certification: Certify that specified tests, inspections, and procedures have been performed and certify report results. Include the following:
   a. Inspections performed
   b. Procedures, materials, and gases used
   c. Test methods used
   d. Results of tests

END OF SECTION

DocuSign Envelope ID: 330DEBD6-9A9E-4F34-BDCC-1AC1BAA701E9

SECTION 99-221300

DRAINAGE SYSTEMS

PART 1 - GENERAL

1.1 WORK INCLUDED

A. General: Provide complete and operable drainage systems within the intent of the Contract Documents, including, but not limited to, all materials and labor for complete installation and testing, in compliance with applicable provisions and recommendations of the Reference Standards.

B. Drainage and vent systems, including, but not limited to, the following:
   1. Drainage and vent piping systems

C. House drains and sewers contract limit line shall be five feet from building wall, or as indicated on the Drawings.

1.2 RELATED DOCUMENTS

A. Section 99-220501 – Plumbing General Provisions

B. Section 99-220529 – Supports, Anchors and Sleeves for Plumbing

C. Section 99-220548 – Vibration Isolation and Seismic Restraints for Plumbing

D. Section 99-221100 – Domestic Water Systems

E. Section 99-221110 – Plumbing Piping and Accessories

F. Section 99-312333 – Trenching and Backfilling

1.3 REFERENCE STANDARDS

Published specifications standards, tests or recommended methods of trade, industry or governmental organizations apply to work in this Section where cited below:

A. ANSI – American National Standards Institute
   1. ANSI/ASME B31.1 – 2007 Revised 2008: Power Piping

B. ASME – American Society of Mechanical Engineers
   1. ASME B1.20.1 – 1983 Revised 2006: Pipe Threads, General Purpose (Inch)
   2. ASME B16.1 – 2005: Gray Iron Pipe Flanges and Flanged Fittings, Classes 25, 125 and 250
   3. ASME B16.3 – 2006: Malleable Iron Threaded Fittings, Classes 150 and 300
   4. ASME B16.5 – 2009: Pipe Flanges and Flanged Fittings, NPS ½ through 24 (Metric/Inch Standard)
   5. ASME B16.10 – 2000 Revised 2003: Face to Face and End to End Dimensions of Valves
   6. ASME B16.34 – 2004: Valves – Flanged, Threaded and Welding End
   7. ASME B31.9 – 2008: Building Services Piping

C. ASTM – American Society for Testing and Materials
   1. ASTM A47 / A47M: Standard Specification for Ferritic Malleable Iron Castings
   2. ASTM A53 / A53M – 2007: Standard Specification for Pipe, Steel, Black and Hot-Dipped, Zinc-Coated, Welded and Seamless
   3. ASTM A74 – 2009: Standard Specification for Cast Iron Soil Pipe and Fittings
   4. ASTM A106 / A106M – 2008: Standard Specification for Seamless Carbon Steel Pipe for High-Temperature Service
   5. ASTM A153 / A153M – 2009: Standard Specification for Zinc Coating (Hot-Dip) on Iron and Steel Hardware
   6. ASTM A183 – 2003 Revised 2009: Standard Specification for Carbon Steel Track Bolts and Nuts
   7. ASTM A197 / A197M – 2006: Standard Specification for Cupola Malleable Iron
   8. ASTM A395 / A395M – 1999 Revised 2009: Standard Specification for Ferritic Ductile Iron Pressure-Retaining Castings for Use at Elevated Temperatures

DocuSign Envelope ID: 330DEBD6-9A9E-4F34-BDCC-1AC1BAA701E9

9. ASTM A518 / A518M – 1999 Revised 2008: Standard Specification for Corrosion-Resistant High-Silicon Iron Castings
10. ASTM A536 – 1984 Revised 2008: Standard Specification for Ductile Iron Castings
11. ASTM A615 / A 615M – 2009: Standard Specification for Deformed and Plain Carbon-Steel Bars for Concrete Reinforcement
12. ASTM A861 – 2004 Revised 2008: Standard Specification for High-Silicon Iron Pipe and Fittings
13. ASTM A888 – 2009: Standard Specification for Hubless Cast Iron Soil Pipe and Fittings for Sanitary and Storm Drain, Waste, and Vent Piping Applications
14. ASTM B633 – 2007: Standard Specification for Electrodeposited Coatings of Zinc on Iron and Steel
15. ASTM C150 / C150M – 2009: Standard Specification for Portland Cement
16. ASTM C564 – 2009: Standard Specification for Rubber Gaskets for Cast Iron Soil Pipe and Fittings
17. ASTM C1277 – 2009: Standard Specification for Shielded Couplings Joining Hubless Cast Iron Soil Pipe and Fittings
18. ASTM D1248 – 2005: Standard Specification for Polyethylene Plastics Extrusion Materials for Wire and Cable
19. ASTM D1599 – 1999 Revised 2005: Standard Test Method for Resistance to Short-Time Hydraulic Pressure of Plastic Pipe, Tubing, and Fittings
20. ASTM D1784 – 2008: Standard Specification for Rigid Poly(Vinyl Chloride) (PVC) Compounds and Chlorinated Poly(Vinyl Chloride) (CPVC) Compounds
21. ASTM D1785 – 2006: Standard Specification for Poly(Vinyl Chloride) (PVC) Plastic Pipe, Schedules 40, 80 and 120
22. ASTM D2000 – 2008: Standard Classification System for Rubber Products in Automotive Applications
23. ASTM D2122 – 1998 Revised 2004: Standard Test Method for Determining Dimensions of Thermoplastic Pipe and Fittings
24. ASTM D2564 – 2004 Revised 2006: Standard Specification for Solvent Cements for Poly(Vinyl Chloride) (PVC) Plastic Piping Systems
25. ASTM D2665 – 2009: Standard Specification for Poly(Vinyl Chloride) (PVC) Plastic Drain, Waste, and Vent Pipe and Fittings
26. ASTM D3222 – 2005: Standard Specification for Unmodified Poly(Vinylidene Fluoride) (PVDF) Molding, Extrusion and Coating Materials
27. ASTM D3311 – 2009: Standard Specification for Drain, Waste, and Vent (DWV) Plastic Fittings Patterns
28. ASTM D3753 – 2005 Revised 2007: Standard Specification for Glass-Fiber-Reinforced Polyester Manholes and Wetwells
29. ASTM E84 – 2009: Standard Test Method for Surface Burning Characteristics of Building Materials
30. ASTM F1290 – 1998 Revised 2004: Standard Practice for Electrofusion Joining Polyolefin Pipe and Fittings
31. ASTM F1412 – 2009: Standard Specification for Polyolefin Pipe and Fittings for Corrosive Waste Drainage Systems
32. ASTM F1673 – 2004: Standard Specification for Poly(Vinylidene Fluoride) (PVDF) Corrosive Waste Drainage Systems

D. AWS – American Welding Society
   1. AWS B2.1/B2.1M – 2005 Revised 2009: Specification for Welding Procedure and Performance Qualification

E. CISPI – Cast Iron Soil Pipe Institute
   1. CISPI 301-05: Standard Specification for Hubless Cast Iron Soil Pipe and Fittings for Sanitary and Storm Drain, Waste, and Vent Piping Applications
   2. CISPI 310-04: Specification for Coupling for Use in Connection with Hubless Cast Iron Soil Pipe and Fittings for Sanitary and Storm Drain, Waste, and Vent Piping Applications

DocuSign Envelope ID: 330DEBD6-9A9E-4F34-BDCC-1AC1BAA701E9

3. CISPI Designation HSN 85: Specification for Neoprene Rubber Gaskets for Hub and Spigot Cast Iron Soil Pipe and Fittings

F. MSS – Manufacturers Standardization Society of the Valve and Fittings Industry
1. MSS SP-70-2006: Gray Iron Gate Valves, Flanged and Threaded Ends
2. MSS SP-80-2008: Bronze Gate, Globe, Angle and Check Valves

G. NFPA – National Fire Protection Association
1. NFPA Standard 262, Edition 07 – Standard Method of Test for Flame Travel and Smoke of Wires and Cables for Use in Air-Handling Spaces.

H. NSF – National Sanitation Foundation
1. NSF 14-2008: Plastics Piping System Components and Related Materials

I. California Code of Regulations, Title 24 – Building Standards Code (The 2010 triennial edition)

J. California Plumbing Code – 2013

K. Local Code and Code Amendments

1.4 QUALITY ASSURANCE

A. Comply with the applicable provisions and recommendations of the standards and codes listed in Paragraph 1.03 Reference Standards and the requirements of the listed related documents in Paragraph 1.02 Related Documents.

B. Valves construction shall be suitable for the pressure, temperature, and fluid quality of the service in which they are to be used.

C. All valves shall be manufactured in accordance with ANSI, AWWA, ASTM, MSS-SP-70 & MSS-SP-80 (Manufacturers Standardization Society of the Valve and Fittings Industry), standards and specifications.

D. ANSI/ASME B31.1 for power piping valves and ASME B31.9 for building services piping valves.

E. ASME 16.10 and ASME 16.34 for dimension and design criteria.

F. Minimum test pressure for all valves shall be 1.5 times maximum system working pressure unless noted otherwise.

1.5 SUBMITTALS

A. For each type of valve indicated, submit body, seating, and trim materials; valve design; pressure and temperature classifications; end connections; arrangement; dimensions; and required clearances. Include list indicating valve and its application. Include rated capacities; pressure differential range, shipping, installed, and operating weights; furnished specialties; and accessories.

B. Product Data: Submit manufacturer's latest information on construction details, rated capacity data, operating characteristics and installation data.'

C. Submit, for all equipment provided under this Section, dimensions, accessories, required clearances, electrical requirements and wiring diagrams specific to this project that clearly differentiates between manufacturer-installed and field-installed wiring and location and size of all required field connections.

D. Submit manufacturer's installation instructions, operation data, start-up instructions, maintenance data, parts list and controls specific to this project, accessories, and maintenance data.

E. Submit report indicating the required rod clean of each roof drain, each roof overflow drain, each area drain and each leader. Submit test report of each drain tested with appropriate water flow for drain type in the presence of the Owner's Representative.

F. Submit all test reports witnessed by Plumbing Inspectors and Owner's Representative.

G. Submit Operational and Maintenance (O&M) manuals.

DocuSign Envelope ID: 330DEBD6-9A9E-4F34-BDCC-1AC1BAA701E9

PART 2 - PRODUCTS

2.1 ACCEPTABLE MANUFACTURERS

A. Following is a list of manufacturers whose products may be submitted for review. All items submitted as being equivalent, shall have same quality, finish, free area, material construction, etc., as those specified under base Specification.
   1. Cast Iron Piping and Fittings: AB&I Foundry, Anaco, Charlotte Pipe, Clamp-All Corporation, Mission Rubber Company, Tyler Pipe, or approved equivalent.
   2. Cast Iron Drainage Products: J.R. Smith, Wade, Josam, Zurn Industries, Mifab, or approved equivalent.
   3. Copper Piping: Anaconda, Cambridge-Lee, Cerro, Howell Metal, Wolverine, or approved equivalent.
   4. Copper Fittings: NIBCO, Elkhart, or approved equivalent.
   5. Low Torque No Hub Couplings: Anaco, Mission, Tyler Pipe, or approved equivalent.
   6. High Torque No Hub Couplings: Clamp-All Corporation, Husky by Anaco, or approved equivalent.
   7. Plenum Wrap: 3M Fire Master, or approved equivalent.
   8. Polypropylene Pipe System: Fuseal II by George Fisher, Inc.
   9. Polyvinylchloride (PVC) Pipe System: **[ ]**, or approved equivalent.
   10. Buried Pipe and Fittings Inside of Foundation Walls: X-Tru Coat Steel Pipe by Republic.
   11. Cleanouts: J.R. Smith, Zurn Industries, or approved equivalent.
   12. Air Gap Fittings: J.R. Smith, Zurn Industries, or approved equivalent.
   13. Traps: Charlotte Pipe, or approved equivalent.
   14. Auxiliary Inlet Fittings: J.R. Smith, Zurn Industries, or approved equivalent.

2.2 DRAINAGE AND VENT PIPING SYSTEMS

A. Above Grade – Sanitary Vent, Sanitary Sewer and Storm Sewer:
   1. No hub, service weight, cast iron soil pipe labeled with the CI mark of quality and permanence as illustrated in latest standards of Cast Iron Soil Pipe Institute (CISPI) Standard 301, ASTM A888 or ASTM A74, and no hub drainage pattern fittings.
      a. Couplings:
         1) Low Torque No Hub Couplings: Series 301 stainless steel hubless coupling band conforming to CISPI Standard 310, using calibrated torque trench of 60 inches per pound, with gaskets conforming to ASTM C564; “TYLER NO HUB“ by Tyler Pipe.
         2) High Torque No Hub Couplings: Series 304 stainless steel hubless coupling band conforming to CISPI Standard 310 and ASTM C1277 installed using calibrated torque trench of 80 inches per pound, with gaskets conforming to ASTM C564; “Husky SD4000“ by Anaco, “Heavyweight Coupling” by Mission Rubber Company, “Clamp-All High Torque 80” by Clamp-All Corporation.
   2. Standard Weight Galvanized Steel Pipe, Schedule 40:
      a. Fittings: Galvanized malleable iron with flat band, steam pattern (vent piping) and cast iron drainage pattern (waste piping).
      b. Joints: Teflon tape applied to male threads only, with no tape or loose ends extending into pipe or past the first thread of the male end. Approved grooved couplings and fittings may be used.
   3. Type DWV Copper and Drainage Copper Fittings: DWV copper drainage piping and fittings are not allowed on urinal waste piping. Schedule 40 galvanized steel pipe and standard weight galvanized cast iron drainage fittings.

B. Underground – Sanitary Vent, Sanitary Sewer and Storm Sewer Pipe – Application: All underground sanitary, storm and vent piping systems under building and within 5 feet-0 inches of the building’s exterior foundation, unless otherwise noted on the Drawings.
   1. Hub and Spigot Type Pipe and Fittings: Service weight cast iron soil pipe with weight per foot and maker’s name clearly stamped or cast on each length, in conformance with

DocuSign Envelope ID: 330DEBD6-9A9E-4F34-BDCC-1AC1BAA701E9

ASTM A74 and CISPI- HSN, and push-on rubber gasketed joint to effect a water-tight seal, in conformance with ASTM C564.

2. No Hub Type Pipe and Fittings: No hub cast iron pipe and fittings shall comply with ASTM A888, and CISPI 301, using High Torque No Hub Couplings: Series 304 stainless steel hubless coupling band conforming to CISPI 310 and ASTM C1277 installed using calibrated torque trench of 80 inches per pound, with gaskets conforming to ASTM C564; "Husky SD4000" by Anaco, "Heavyweight Coupling" by Mission Rubber Company, "Clamp-All High Torque 80" by Clamp-All Corporation.

2.3 CLEANOUTS

A. Floor Type (FCO):
   1. Ceramic and Porcelain Tile Areas: Cast iron cleanout with square adjustable scoriated nickel bronze top with tile recess, vandal-proof screws, plastic plug or bronze gasketed plug, spigot outlet; "No. 4161-U Series" by J.R. Smith, "No. ZN1400-TX-VP Series" by Zurn Industries, or approved equivalent.
   2. Terrazzo and Similar Poured Floor Material Areas: Cast iron cleanout with square adjustable scoriated nickel bronze top with recess, vandal-proof screws, plastic plug or bronze gasketed plug, spigot outlet; "No. 4201-U Series" by J.R. Smith, "No. ZN1400-Z-VP Series" by Zurn Industries, Inc., or approved equivalent.

B. Wall Type (WCO) – Cleanout Wall Plate: Cast iron cleanout tee with round stainless steel cover, vandal-proof screws, plastic or gasket sealed bronze plug and spigot outlet; "No. 4531-U Series" by J.R. Smith, "No. Z1446-VP Series" by Zurn Industries, Inc., or approved equivalent.

C. Ferrules:
   1. Provide ferrules of "Extra Heavy" cast brass, and of weight and size as follows:

Size	Minimum Length (in Inches)	Weight (in Pounds)
2 inches	4.5	1
3 inches	4.5	1.75

2.4 DRAINAGE SPECIALTIES

A. General:
   1. Drains:
      a. Floor drain outlets connecting to buried piping shall be as style as required to comply with piping manufacturer recommendations and jurisdictional plumbing code.

B. Air Gap Fitting: Cast bronze fixed air gap with set screw on inlet, 1.5-inch thread outlet, inlet size to match connecting pipe size; "Series 3950T-CP" by J.R. Smith, or approved equivalent, "Series Z1024" by Zurn Industries, Inc., or approved equivalent.

C. Traps:
   1. General:
      a. No hub cast iron "P" trap; "Fig No. NH43" or "NH42" and provide cast iron tailpiece with ½-inch tapping by Charlotte Pipe, or approved equivalent. Material same as piping system. Type of trap shall be approved by local code(s).
      b. Service weight cast iron "P" trap; "Fig No. SV 169" by Charlotte Pipe, or approved equivalent. Material same as piping system. Type of trap shall be approved by local code(s).
   2. Deep Seal "P" Trap:
      a. No hub cast iron cast iron deep seal "P" trap; "Fig No. NH44A" by Charlotte Pipe, or approved equivalent. Hub service weight cast iron cast iron deep seal "P" trap; "Fig No. NH44" by Charlotte Pipe, or approved equivalent.
      b. Hub and spigot or service weight cast iron deep seal "P" trap.

DocuSign Envelope ID: 330DEBD6-9A9E-4F34-BDCC-1AC1BAA701E9

D. Auxiliary Inlet Fittings:
   1. No hub cast iron with ½-inch trap primer connection; “No. 2695” by J.R. Smith, “No. Z1023” by Zurn Industries, Inc., or approved equivalent.
   2. Hub and spigot cast iron with ½-inch trap primer connection; “No. 2697C” by J.R. Smith, or approved equivalent.

PART 3 - EXECUTION

3.1 APPLICATIONS

A. No Hub Couplings:
   1. Provide low-torque no-hub couplings on waste and sanitary piping 4 inches and smaller.
   2. Provide low-torque no-hub couplings on vent piping.

B. Auxiliary Tailpiece with Tapped Inlet: Provide auxiliary tailpiece with tapped inlet for installation on drain body outlet piping, where trap primer is required and drain body and “P” trap is provided without trap primer connection.

3.2 INSTALLATION

A. Piping:
   1. Make screwed joints with Teflon sealing tape and with a minimum of three screw threads left visible.
   2. Nipples: Provide nipples of weight corresponding to piping. Use only shoulder nipples unless otherwise directed.
   3. Pitch drainage piping, unless otherwise indicated, at a minimum rate of 2 percent in direction of flow for drainage system.
   4. Connections and Change in Direction:
      a. Make changes in direction with long sweep or bends or with ⅛ and/or $^{1}/_{16}$ bends at cleanouts, combination “Y” and ⅛ bend branches at base of roof leader and drainage stacks and vertical piping rising to fixture waste rough-ins.
      b. Make connections of branches to mains with “Y” fittings and ⅛ or $^{1}/_{16}$ bends.
      c. Double sanitary tees may be used when barrel of the fitting is at least two pipe sizes larger than the largest inlet.
      d. Do not change direction of flow more than 90 degrees.
      e. Use proper size of standard increasers and reducers if pipes of different sizes are connected.
      f. Reducing size of drainage piping in direction of flow is prohibited.
   5. Buried Piping: Lay buried building drain piping beginning at low point of each system. Install true to grades and alignment indicated, with unbroken continuity of invert. Place hub ends of piping upstream. Install required gaskets according to manufacturer’s written instructions for use of lubricants, cements, and other installation requirements. Maintain swab in piping and pull past each joint as completed.

B. Caulked Cast Iron Bell and Spigot Joints:
   1. Make joints with lead and tarred oakum.
      a. Use joint runner so that after pouring lead shall finish flush with bell.
      b. Provide 1-inch minimum depth lead seal.
   2. Make joints between cast iron pipe and steel, or copper pipe with fittings made especially for that purpose.
      a. Tapped spigots
      b. Tucker connections
      c. Equivalents as approved by the Architect

C. Supports:
   1. All horizontal cast iron no-hub pipe shall be supported every 10 feet maximum, and within 6 inches at each side of each joint. When a concentration of fittings occurs, additional support shall be installed, consistent with good trade practices. All horizontal cast iron soil piping shall be supported at each horizontal branch connection.

DocuSign Envelope ID: 330DEBD6-9A9E-4F34-BDCC-1AC1BAA701E9

2. All horizontal plastic pipe 2 inches and smaller shall be supported in accordance with manufacturer support data based on temperature of 140 degrees F and on each side of each joint. When a concentration of fittings occurs, additional support shall be installed, consistent with good trade practices. All horizontal piping shall be supported at each horizontal branch connection.
3. Supports for vertical piping shall be double bolt riser clamps, with each end having equal bearing on the building structure. Supports to be provided as follows:
   a. Cast iron pipe at its base.
   b. All auxiliary steel and supports required for pipe supports shall be provided under this Section.
   c. Make piping rigid in piping chases using support systems to resist push or pull movement at fixture waste rough-ins.
   d. Make piping rigid in piping chases using supports system directly attached to piping to resist push or pull movement at fixture waste rough-ins.

D. No-Hub Cast Iron Soil Pipe:
1. Where components are suspended in excess of 18 inches by means of non-rigid hangers, brace against horizontal movement (sway brace).
2. In seismic zones 3 and 4, provide support on both sides of the no-hub coupling on piping 5-inch and larger routing over public, high-traffic areas, lobbies, and egress pathways.

E. Traps:
1. Refer to Section 99-21100 – Domestic Water Systems, for plumbing fixture traps.
2. Provide deep seal “P” traps for all floor drain and floor sink installation with trap primers. Should building conditions prevent use of a deep seal “P” trap, notify Architect (on a case-by-case basis) for direction.
3. Set traps level with regard to their water line.
4. Traps shall be same size as connecting drain outlets.
5. Provide adaptor coupling where required to connect dissimilar waste piping materials as recommended by waste piping manufacturers.

F. Cleanouts:
1. Provide cleanouts in drainage systems in accordance with the Reference Standards and where indicated.
2. Provide cleanouts in indirect waste lines at every change in direction.
   a. Buried Piping:
      1) Provide cleanouts at ends of horizontal branches and mains, at base of riser conductor lines, at changes in direction greater than 45 degrees, in main drains where mains leave building, and where necessary to remove obstructions.
      2) Locate cleanouts so that developed length is not more than 50 feet apart on lines 4 inches and smaller and not more than 100 feet apart on lines 5 inches through 15 inches.
3. Cleanouts at the base of all drainage stacks with tapped tees capable of receiving a rough brass countersunk head.
4. Provide brass cleanout plugs and thoroughly coat threads on removable parts with graphite.
5. Provide a full size “Y” branch cleanout in sanitary house drains within 2 feet of the foundation wall.
6. Provide cleanouts and related covers full size for pipes up to 4 inches inclusive, not less than 4 inches for pipes up to 6 inches.
7. Install cleanouts on 3-inch or larger pipes at location to maintain minimum clearance of 18 inches.
8. Install cleanouts on 1.5-inch and 2-inch pipes at location to maintain minimum clearance of 12 inches.

G. Vent Piping:
1. Provide vents shown on the Drawings, as required by Plumbing Code, and as necessary to prevent siphonage or back-pressure on trap seals and to maintain air circulation and atmospheric pressure throughout drainage system.

DocuSign Envelope ID: 330DEBD6-9A9E-4F34-BDCC-1AC1BAA701E9

2. Do not locate outlets of vent piping through the roof less than 25-feet, 0-inches from any air intake duct and vent shaft louver.
3. Do not terminate vent outlet less than ten (10) feet from any openable window, door opening, air intake vent shaft, nor less than three (3) feet in every direction from any lot line; alley and street excepted.
4. Vent lines shall be extended separately or combined, of full required size, not less than six (6) inches above the roof or fire wall.
5. Flag poling of vents is prohibited, except where roof is used for purposes other than weather protection.
6. All vents within ten (10) feet of any part of the roof that is used for such other purposes shall extend not less than seven (7) feet above such roof and shall be securely stayed.
7. Vent pipes installed at grade level shall be extended ten (10) feet above the surrounding ground and shall be securely stayed.
8. Grade vents to discharge water of condensation, where possible and do not allow reverse grade to trap water.
9. Make offsets at 45-degree angle wherever possible. Connect upper ends of drainage lines to vent system or extend through roof without decreasing size of vent stacks.
10. Arrange vents and related connections, except wet vent, to not carry drainage.
11. Connect bottom of vent risers to drains in an arrangement where the drainage will wash out rust and scale from the vent riser.
12. Extend portions of vents above floor line upwards to points not less than six (6) inches above flood rim of highest fixture before running horizontally.
13. Run portions below floor line vertically wherever possible.
14. Do not connect main vents into soil or waste stacks lower than six (6) inches above flood rim of highest fixture on stack.

3.3 TESTING AND ADJUSTMENTS

A. Provide testing of all installed drainage and vent systems during the progress of the work, including sanitary, storm drainage and vent systems, and fixture roughing-in sections, as directed to permit general construction and building-in of rough work to proceed. Such tests shall be made in the presence of the Owner's Representative, Building Department Inspectors and all other Authorities Having Jurisdiction. A minimum of 48-hours' notice shall be given to all parties prior to any testing.

B. Take all due precautions to prevent damage to the building or its contents that may be incurred by such tests as the Contractor will be required to repair and make good, at own expense, any damage caused.

C. Any defects or deficiencies discovered as a result of tests shall be immediately repaired and tests shall be repeated until all test requirements are fully met.

D. No caulking of pipe joints to remedy leaks will be permitted except for hub and spigot joints where lead and oakum joints are used.

E. Each section of drainage and vent rough-in piping tested shall have all openings tightly closed with screw plugs, or equal device, and stand without loss of level for a period of 4 hours when filled with water which produces at least a 10-foot head at the highest point of the section tested.

F. The drainage and vent systems shall again be tested and made tight after all plumbing fixtures are connected in place and with water seals in traps by means of standard smoke or chemical test as required by the Plumbing Inspector.

G. Submit to the Architect copies of all test reports witnessed by Plumbing Inspector(s) and Owner's Representative.

END OF SECTION

DocuSign Envelope ID: 330DEBD6-9A9E-4F34-BDCC-1AC1BAA701E9

SECTION 99-224000

PLUMBING FIXTURES

PART 1 - GENERAL

1.1 WORK INCLUDED

A. The work of this Section shall include, but is not limited to, the following:
   1. Drinking fountains

1.2 RELATED DOCUMENTS

A. Section 99-220501 – Plumbing General Provisions

B. Section 99-220529 – Supports, Hangers, Anchors and Sleeves for Plumbing

C. Section 99-221110 – Plumbing Piping and Accessories

1.3 REFERENCE STANDARDS

Published specifications standards, tests or recommended methods of trade, industry or governmental organizations apply to work in this Section where cited below:

A. ADA – Americans with Disabilities Act
   1. ADA Article 4.19.4 – Exposed Pipes and Surfaces

B. ANSI – American National Standards Institute
   1. ANSI Z535 Series – 2007: Safety Color Code – Environmental Facility Safety Signs – Criteria for Safety Symbols – Product Safety Signs & Labels and Accident Prevention Tags
   2. ANSI Z535 Color Chart – 2006: Safety Color Chart for Information and Use with ANSI Z535.1, Z535.2, Z535.3, Z535.4, Z535.5 and Z535.6
   3. ANSI Z535.1 – 2006: Safety Color

C. ASME – American Society of Mechanical Engineers
   1. ASME A112.18.1 – 2005: Plumbing Supply Fittings
   2. ASME A112.18.2 – 2005: Plumbing Waste Fittings
   3. ASME A112.18.3 – 2002 Reaffirmed 2008: Performance Requirements for Backflow Protection Devices and Systems in Plumbing Fixture Fittings
   4. ASME A112.19.4 – 1994 Revised 2004: Porcelain Enameled Formed Steel Plumbing Fixtures

D. ASTM International – originally known as the American Society for Testing and Materials
   1. ASTM E84 – 2009: Standard Test Method for Surface Burning Characteristics of Building Materials

E. ASSE – American Society of Sanitary Engineering
   1. ASSE 1001-2008 – Performance Requirements for Atmospheric Type Vacuum Breakers

F. BOCA – Building Officials and Code Administrators International, Inc.
   1. BOCA P 1203.4

G. ETL – ETL SEMKO (formerly Edison Testing Laboratory)

H. FM – Factory Mutual Approvals LLCfc

I. FDA – U.S. Food and Drug Administration: Code of Federal Regulations, Title 21, Volume 3
   1. 21CFR175.300 – 2009 – Resinous and Polymeric Coatings

J. ISO – International Organization for Standardization
   1. Reference ISO 9001 – 2009: Quality Management Systems – Requirements

K. MSS – Manufacturers Standardization Society of the Valve and Fittings Industry
   1. MSS SP-70-2006: Gray Iron Gate Valves, Flanged and Threaded Ends
   2. MSS SP-80-2008: Bronze Gate, Globe, Angle and Check Valves

L. NSF – National Sanitation Foundation
   1. NSF 51-2009: Food Equipment Materials
   2. NSF/ANSI 61-2008: Drinking Water System Components – Health Effects

DocuSign Envelope ID: 330DEBD6-9A9E-4F34-BDCC-1AC1BAA701E9

M. UL – Underwriters Laboratories Inc.
   1. UL 94 – 1996 Revised 2009: Tests for Flammability of Plastic Materials for Parts in Devices and Appliances
   2. UL 723 – 2008: Test for Surface Burning Characteristics of Building Materials
   3. UL 1951 – 1994 Revised 2008: Electric Plumbing Accessories

N. CCR – California Code of Regulations
   1. Title 24 – Building Standards Code (The 2007 triennial edition)

O. California Plumbing Code – 2013

P. Uniform Plumbing Code – 2012

Q. Caltrans Standard Requirements

R. Local Codes and Code Amendments

1.4 QUALITY ASSURANCE

A. Regulatory Requirements:
   1. Water Conservation: Comply with the applicable provisions and recommendations of the following Codes:
      a. 2013 California Building Code (2012 IBC)
      b. 2013 California Plumbing Code (2012 UPC)
      c. 2013 California Building Standard Code – Title 24, Part II California Green Building Standards Code (Calgreen)
      d. California Health and Safety Code, Section 116875(b) – California Lead-Free Plumbing Law AB 1953
      e. State of California Energy Conservation Standards, Title 24 2010
      f. 2013 CBC, Chapter 11B “Accessibility to Public Buildings, Public Accommodations, Commercial Buildings and Public Housing”
      g. Caltrans Standard Requirements
   2. Comply with the applicable provisions and recommendations of the standards and codes listed in Paragraph 1.03 and the requirements of the listed Related Documents.

1.5 SUBMITTALS

A. For each fixture type indicated, submit fixture and trim materials; connections; arrangement; dimensions; and required clearances.

B. Product Data: Submit manufacturer’s latest certified published data on construction details, capacity data, operating characteristics, pressure ratings, operating weights, furnished specialties, and accessories and installation data.

C. Submit, for all equipment provided under this Section, dimensions, accessories and required clearances.

D. Submit manufacturer’s installation instructions, operation data, start-up instructions, maintenance data, parts list and controls specific to this project, accessories and maintenance data.

E. Submit warranties, complete warranty and service policies, including all exclusions and conditions.

F. Submit Operational and Maintenance (O&M) manuals.

1.6 PERFORMANCE REQUIREMENTS

A. Plumbing fixtures shall meet or exceed the performance requirements specified in this specification Section.

1.7 ENVIRONMENTAL OBJECTIVES

A. Products that conform to requirements of the Environmental Objectives yet do not fully meet other requirements of this Section may still be considered for use at the sole discretion of the Owner and Architect.

DocuSign Envelope ID: 330DEBD6-9A9E-4F34-BDCC-1AC1BAA701E9

PART 2 - PRODUCTS

2.1 ACCEPTABLE MANUFACTURERS

A. Carriers: Zurn, Josam, J.R. Smith

B. Traps, Stops, Supplies, Drains and Strainers: McGuire, Dearborn

C. Drain and Supply Insulation: McGuire, Truebro

D. Drinking Fountains: Filtrine, Halsey-Taylor, Haws, Elkay

2.2 DRINKING FOUNTAINS

A. General Characteristics:
   1. Lead-Free Requirements: Provide all waterway components constructed of lead-free materials and conforming to definition of “lead free” as defined in the Safe Drinking Water Act of 1974 amended in 1986; and the Lead Contamination Control Act of 1988.

B. Drinking Fountain DF-1: ADA-Compliant Installation:
   1. ADA-Compliant design, wall hung, no lead, semi recessed, 38½ inches wide by $21^{15}/_{16}$ inches high by 18⅜ inches deep, 18-gauge, Type 300 stainless steel with satin finish, and stainless steel back panel, two-level fountain with front push button, flow regulator, vandal-resistant bubblers, heavy duty, one piece construction, Model Swirlflor “EDFPBMV117RAC” by Elkay.
   2. To be field-provided and -installed:
      a. Service Stop (Valve)
      b. Trap

2.3 SERVICE SINKS

PART 3 - EXECUTION

3.1 INSTALLATION

A. Provide each fixture with all required trim, including but not limited to carriers, supports, faucets, stops, waste fitting, traps, vacuum breaker, bolts, gaskets, and wall escutcheons.

B. Provide chromium-plated brass materials for exposed supplies, stops, valves, wastes, bolts, screws, bushings, traps and nipples, exposed piping and wall flanges plates and escutcheons.

C. Fixture traps shall be “P” Traps with or without cleanouts as specified.

D. During course of construction, cover exposed trim, fixtures and fittings with suitable protection. When directed, thoroughly clean fixtures and fittings.

E. Be fully responsible for protection of fixtures before and after inspection until final acceptance of the entire building by the Owner. The Contractor regardless of who caused the damage shall immediately replace any damaged fixture.

F. Provide fixtures free from imperfections; true as to line, angles, curves and color; smooth, and water-tight.

G. Alternate products shall have clearances, waterways and assembly equal to that of the plate number of the product selected.

H. Provide chromium plated, cast brass wall escutcheons with set screws at supply and drain penetrations through walls and casework.

I. Provide chromium-plated brass materials for exposed supplies, stops, valves, faucets, strainers, wastes, bolts, screws, bushings, traps and nipples, etc.

J. Securely fasten and support supply and drain piping in pipe chases and walls to obtain rigid installation.

K. Vibration isolation of domestic water piping serving fixtures shall be as specified in specification Section 99-230548 – Vibration Isolation and Seismic Restraints.

L. Securely fasten and support drinking fountain. Provide blocking in walls as required to support fixture. Conceal all supports. Use expansion shields or toggle bolts for fastening to masonry.

DocuSign Envelope ID: 330DEBD6-9A9E-4F34-BDCC-1AC1BAA701E9

Carefully drill holes to avoid chipping, cracking, etc. Paint exposed ironwork with enamel color as approved by the Architect.

M. Provide sanitary sealant for fixture installations:
   1. Apply sealant to a clean and dry surface at temperatures between 20 and 90 degrees F. Use rubbing alcohol to clean surface before applying sealant. Cut opening on spout at desired angle to dispense sealant. Apply sealant with any standard caulking gun. Smooth off excess as recommended by manufacturer.

N. ADA-Compliant Installations:
   1. Install ADA-compliant plumbing fixtures in conformance with Title III of American Disabilities Act Guidelines and ASME Standard A112.19.2.
   2. Install ADA-compliant drinking fountains with spout orifice 3 feet-0 inches above the finished floor.

END OF SECTION

DocuSign Envelope ID: 330DEBD6-9A9E-4F34-BDCC-1AC1BAA701E9

SECTION 99-226313

NATURAL GAS SYSTEMS

PART 1 - GENERAL

1.1 DESCRIPTION

A. General: Provide gas systems in accordance with the Contract Documents.

1.2 REFERENCE STANDARDS

A. Comply with applicable provisions and recommendations of the following Codes:
   1. 2013 California Code of Regulations, Title 24 (California Building Standards Code)
   2. California Plumbing Code 2013
   3. Local Code and Amendments
   4. SDG&E Requirements
   5. NFPA 54-2009, National Fuel Gas Code

B. Provide gas systems in accordance with the intent of the Contract Documents. Install all gas services, regulators, etc., in accordance with the provisions of gas serving company and obtain all necessary approvals.

C. Ascertain what materials and/or labor will be provided by the local utility company and/or other City authority and pay any fee in conjunction therewith.

D. Gas service contract limit line as indicated on the Drawings.

1.3 RELATED DOCUMENTS

A. Section 99-220501 – Plumbing General Provisions

B. Section 99-230900 – Building Management System (BMS)

PART 2 - PRODUCTS

2.1 BELOW GRADE PIPING AND FITTINGS

A. Piping: Polyethylene piping, with heat fusion weld joints, Type II, ASTM D2513, ASTM D2683, ASTM D3261, PE 2406, where approved by local gas company standards.
   1. 1 inch NTS SDR 12.5
   2. 1.25 inch NTS SDR 13.9
   3. 1.25 inch IPS SDR 10
   4. 2 inches IPS SDR 11

B. Transition Fittings: Steel to polyethylene pipe transition couplings and risers shall conform to ASTM D2513 & D2683 and ANSI B31.8 and DOT 192.121, ANSI B1.20, where applicable and meet design, material and construction standards of gas service company. Provide all accessories and fittings required for complete installation at building gas riser location available from Perfection Corporation, or Continental Industries.

C. Tracer Wire: Single conductor with green coating and minimum size No. 12 AWG stranded copper.

D. Buried Pipe Tape: 2 inches wide, safety yellow color code, heavy gauge 0.035-inch, detectable aluminum film including following text: “CAUTION Gas line buried below”.
   1. Acceptable manufacturers/products include:
      a. Seton Name Plate Company
      b. EMED Co., Inc., Buffalo, New York
      c. Enterprises, Inc., Waterloo, Michigan
      d. “Magnetec” by Thor Enterprises, Inc., Waterloo, Michigan

E. Underground at Service Entrance: Same as Above-ground covered with a flexible polymer film with coal tar and synthetic elastomeric coating of 36-mil thickness or extruded high-density polyethylene factory applied coating of 30 mil thickness. Wrap fittings with 10-mil polyethylene

DocuSign Envelope ID: 330DEBD6-9A9E-4F34-BDCC-1AC1BAA701E9

tape, ANSI A21.5, double layer, half-lapped. Minimum dielectric strength exceeding 12kV. Use compatible primer below polymer film or polyethylene tape.

2.2 ABOVE GRADE PIPING AND FITTING MATERIALS

A. General Characteristics for Threaded Pipe and Fittings:
   1. Field Pipe Threading: Comply with National Fuel Gas Code "Table I Specifications for Threading Metallic Pipe" for length of threaded portion of pipe and number of threads to be cut.
   2. Metallic Pipe and Fittings Threads: Taper pipe threads complying with Standard for Pipe Threads, General Purpose, ANSI/ASME B1.20.1.
   3. Thread Compounds: Resistant to action of chemical constituents of gases to be conducted through piping systems and labeled by manufacturer accordingly.

B. Above Grade Interior Piping: ASTM A106 Gr. B, or A53B seamless, Schedule 40, carbon steel pipe.

C. Above Grade Exterior Piping: ASTM A106 Gr. B, or A53B seamless, Schedule 40, carbon steel pipe, hot dipped galvanized coating.

D. Fittings:
   1. Pipe sizes 2.5 inches and smaller:
      a. Interior 150# black malleable iron screwed fittings.
      b. Exterior 150# black malleable iron screwed fittings with hot dipped galvanized coating.
   2. Joints: Red or white lead and oil or approved pipe compound.

2.3 VALVES

A. Lubricated Plug Valves: UL Listed valves, ASTM A126 Grade B steel body and plug material, suitable for natural gas service and pressures up to 200 psi, with close tolerance between the plug and body sealing surfaces, reinforced Teflon stem seal, leak-proof spring loaded ball and lubricant sealed check valve; and combination lubricant screw and button head fitting to prevent foreign matter from being forced into lubricant system. Valve plugs are to be floated on low-friction Teflon surfaces for extra ease of turning – the lower surface to also act as a means of minimizing torsional stress in the spring – and are to have port area equal to 100 percent of the area of standard pipe. Valves are to be so constructed that lubricant system has sufficient pressure to force lubricant over all seating surfaces. Extruded Lubricant around stem is to be positive indication that lubricant system is full, and that there had been a minimum contamination of line fluids. Lubricant shall be suitable for hydrocarbons, L.P.G. and natural gas. Similar to the following:
   1. Interior manual gas valves (½-inch to 2.5-inch size): Screwed ends, lever actuation, and lever handle; "Series 601" by Homestead® Valve Division of Olson Technologies.
   2. Interior manual gas valves (3-inch to 6-inch size): Flanged ends, lever actuation, and lever handle; "Series 602 and 622" by Homestead® Valve Division of Olson Technologies.

B. Ball Valves (½-inch to 2-inch size): Bronze ball valve with B16 chrome plated brass ball and threaded ends; vinyl-coated steel handle; factory-tested under water with air pressure in open and closed positions. Listed by Underwriters Laboratories as natural gas shut-off valve and labeled accordingly; "Series 80-100" by Apollo.

C. Check Valves: Bronze swing check valve with soft resilient disc, suitable for natural gas service; "B-320BC, Class 125, threaded ends, with BUNA-N Disc" by Stockham.

2.4 PRESSURE REGULATING VALVES

A. ¾-Inch Pipe Size:
   1. Lower Diaphragm Case: Die cast aluminum with an exclusive 7-step advance conversion coating, single coat polyester and High Polyurethane Top Coat
   2. Top Assembly: Die cast aluminum with an exclusive 7-step advanced conversion coating, single coat polyester primer and High Solid Polyurethane Top Coat
   3. Pressure Spring: Steel, zinc plated and yellow chromate treated. Color coded for identification

DocuSign Envelope ID: 330DEBD6-9A9E-4F34-BDCC-1AC1BAA701E9

4. Diaphragm Plate: Steel, plated
5. Seat Disc: Buna-N
6. Orifice: High strength, corrosion resistance, aluminum
7. Lever: Stamped aluminum
8. Seal Plug: Ultraviolet stabilized, mineral filled nylon
9. ¾-inch pipe size
10. 5-inch w.c. to 7.5-inch w.c. outlet pressure regulation
11. Removable weather and bug-proof stainless steel screened ¾ inch NPT vent to resist freeze-ups and to exclude foreign matter
12. Design Conditions: Inlet pressure 5 psi outlet pressure 7 inch w.c. with minimum capacity: 32 scfh
13. "S-253" by Fisher; or "CR-4000-180" by American Meter

B. 2-inch pipe size, flanged connections, spring color Green for 6 inch w.c. to 14-inch w.c. outlet pressure regulation, die cast aluminum alloy diaphragm case and cast iron body, diaphragm type regulator valve, internal control tube for pressure control, straight body with flow horizontal and vent outlet pointing downward. Provide regulator meeting following design conditions: inlet pressure 5 psi, outlet pressure 8 inch w.c. Capacity: 3350 scfh; "Model 3000" by Elster American Meter.

C. 2-inch pipe size, flanged connections, spring color Green for 6 inch w.c. to 14-inch w.c. outlet pressure regulation, die cast aluminum alloy diaphragm case and cast iron body, diaphragm type regulator valve, internal control tube for pressure control, straight body with flow horizontal and vent outlet pointing downward. Provide regulator meeting following design conditions: inlet pressure 1 psi, outlet pressure 14-inch w.c. Capacity: 7834 scfh; "Model 122-12" by Equimeter.

D. 1.5-inch pipe size, threaded connections, spring color Blue for 5 inch w.c. to 8.5-inch w.c. outlet pressure regulation, diaphragm type regulator valve, straight body with internal relief vent. Inlet pressure 14 inches w.c., outlet pressure 8 inches w.c. Capacity: 634 scfh; "Model 243-12 –1" by Equimeter.

2.5 GAS METER

Existing to remain.

2.6 MISCELLANEOUS

A. Vent Cap:
1. ¾-inch to 1-inch pipe size: Aluminum body, built-in drip edge for rain and painter protection, full size venting sized to compensate for effective screen opening, stainless steel screen; similar to "Blo-Vent" by UPSCO.
2. 2-inch pipe size: 180-degree return bend steel end with 0.23 gauge stainless steel 12-inch by 12-inch mesh screen on outlet; "2-inch Return Bend" by UPSCO.
3. 1.25-inch to 4-inch pipe size: Iron body, 90-degree elbow with standard pipe thread with 12-inch by 12-inch mesh stainless steel screen on outlet; "Gas Vent" by UPSCO.

PART 3 - EXECUTION

3.1 INSTALLATION

A. Install piping without pockets, with drips at low points, and with valves at each outlet.

B. Use right and left nipples. Do not use bushings, unions and compression couplings.

C. Gas piping within the building below grade is to be run in casings or conduits and to be properly vented at both ends.

D. Gas piping run in plenum spaces, regardless of size to be welded and shall be run in a two-hour enclosure. No valves shall be installed in plenum spaces.

E. Provide dielectric union between buried steel gas piping using listed isolation fitting.

DocuSign Envelope ID: 330DEBD6-9A9E-4F34-BDCC-1AC1BAA701E9

3.2 APPLICATION

A. Manual shut-off valves used on piping systems shall be as indicated for pipe sizes in PART 2.

B. Over-Pressurization Relief Valve: Provide capacity in valve for full relief capacity when pressure regulator fails in widest position and include vent pipe rising 7 feet-0 inches above grade.

3.3 TESTING AND ADJUSTMENTS

A. Test the gas piping system by means of an air pump and mercury gauge to a pressure equal to the maintenance of a column of mercury 12 inches high for a period of 10 minutes. Conduct the test in the presence of all required inspectors.

B. Test under air pressure to 60 to 80 pounds per square inch for minimum one hour duration. Measure natural gas system test pressure with a water manometer or an equivalent device calibrated in increments not greater than 0.1 inch water column. System shall not be approved until it can be demonstrated that there is no measurable loss of test pressure during the test period.

C. Submit all test reports, witnessed by City Inspectors, to the Project Manager.

END OF SECTION

DocuSign Envelope ID: 330DEBD6-9A9E-4F34-BDCC-1AC1BAA701E9

SECTION 99-230501

HVAC GENERAL PROVISIONS

PART 1 - GENERAL

1.1 DESCRIPTION

A. The General and Supplementary Conditions and Parts 1 through 7 of the Special Provisions are a part of the requirements for the work under this Division of the Specification.

1.2 WORK INCLUDED

A. Provide labor and materials required to install, test and place into operation the heating, ventilating, air conditioning, plumbing and fire protection systems as called for in the Contract Documents and according to applicable codes and regulations.

B. Provide labor, materials and accessories required to provide complete operating mechanical systems as described or which may be reasonably implied as essential for a complete operating system.

1.3 QUALITY ASSURANCE

A. Comply with current governing codes, ordinances and regulations of the Authority or Authorities Having Jurisdiction over any part of the work and secure all necessary permits. Comply with the regulations and requirements of the Owner's insurance underwriter.

B. Where codes or standards are referenced, the applicable portions apply.

C. Drawings, specifications, codes and standards are minimum requirements. Where requirements differ, apply the more stringent.

D. Should any change in drawings or specifications be required to comply with governing regulations, notify the Architect prior to submitting bid.

E. Execute work in strict accordance with the best practices of the trades in a thorough, substantial, skillful and well-executed manner by competent workers. Provide a competent, experienced full-time Superintendent who is authorized to make decisions on behalf of the Contractor.

F. The Architect or Architect's Representative may conduct unannounced field reviews of any work completed or in progress during the Contractor's working hours. A report will be issued to the Contractor if the field review of the mechanical, plumbing and fire protection systems construction has revealed elements of the work, which are inconsistent with the Contract Documents. All items in the report shall be addressed in writing by the Contractor within two (2) weeks and corrections in the field shall be made as directed.

1.4 ABBREVIATIONS AND DEFINITIONS

A. Abbreviations:

1. AABC Associated Air Balance Council
2. ABMA American Bearing Manufacturers Association
3. ADC Air Diffusion Council
4. AGA American Gas Association
5. AHRI Air Conditioning and Refrigeration Institute
6. AMCA Air Movement and Control Association
7. ANSI American National Standards Institute
8. ASA Acoustical Society of America
9. ASCE American Society of Civil Engineers
10. ASHRAE American Society of Heating, Refrigeration, and Air Conditioning Engineers
11. ASME American Society of Mechanical Engineers
12. ASTM American Society for Testing and Materials
13. EPA Environmental Protection Agency
14. ETL ETL SEMKO (formerly Edison Testing Laboratory)
15. FM Factory Mutual

DocuSign Envelope ID: 330DEBD6-9A9E-4F34-BDCC-1AC1BAA701E9

16. IEEE Institute of Electrical and Electronic Engineers
17. ISO International Organization for Standardization
18. NEMA National Electrical Manufacturers Association
19. NFPA National Fire Protection Association
20. NIOSH National Institute for Occupational Safety and Health
21. NPT National Pipe Thread: Tapered
22. NSF National Sanitation Foundation
23. OSHA Occupational Safety and Health Administration
24. SMACNA Sheet Metal and Air Conditioning Contractors National Association
25. UL Underwriters Laboratories Inc.

B. Definitions:
1. Where it is stated in the specifications to submit to Architect or Engineer for review, refer to Architectural General and Special Conditions for proper procedures.
2. “PROVIDE” means to “Furnish” and “Install”.
3. “INSTALL” means to join, unite, fasten, link, attach, set up or otherwise connect together before testing and turning over to Owner, complete and ready for regular operation.
4. “FURNISH” means to supply all materials, labor, equipment, testing apparatus, controls, tests, accessories and all other items customarily required for the proper and complete application.
5. “AS DIRECTED” means as directed by the Architect, or the Architect’s Representative.
6. “CONCEALED” means embedded in masonry or other construction, installed behind wall furring or within double partitions, or installed within hung ceilings.
7. “SUBMIT” means submit to the Architect for review.

1.5 GUARANTEE

A. Submit a single guarantee stating that the work is in accordance with Contract Documents. Guarantee work against faulty and improper material, fabrication, installation, start-up and commissioning for a period of one (1) year from date of final acceptance by the Owner, except that where guarantees or warranties for longer terms are specified herein, the longer term shall apply. Correct any deficiencies, which occur during the guarantee period, within 24 hours of notification, at no additional cost to the Owner, to the satisfaction of the Owner. Obtain similar guarantees from subcontractors, manufacturers, suppliers and sub-trade specialists.

1.6 USE OF THE ARCHITECT’S AND ENGINEER’S DRAWINGS

A. The Contractor shall obtain, at the Contractor’s request, from the Architect or Engineer a set of AutoCAD or compatible format architectural and engineering drawings on electronic media where desired by the Contractor and/or required by the Specifications for use in preparing the shop drawings, coordination drawings, and record drawings. The Contractor shall provide to the Architect and Engineer a written release of liability acceptable to the Architect and Engineer prior to receiving the electronic media files.

PART 2 - PRODUCTS

2.1 EQUIPMENT AND MATERIALS

A. Provide products and materials that are new, clean, free of defects and free of damage and corrosion.

B. Products and materials shall not contain asbestos, PCBs or any other material that is considered hazardous by the Environmental Protection Agency or any other Authority Having Jurisdiction.

C. Replace materials of less than specified quality and relocate work incorrectly installed as directed by the Architect.

D. Statically and dynamically balance rotating equipment for minimum vibration and lowest operating noise level.

DocuSign Envelope ID: 330DEBD6-9A9E-4F34-BDCC-1AC1BAA701E9

E. Provide name/data plates on major components of equipment with manufacturer's name, model number, serial number, capacity data and electrical characteristics attached in a conspicuous place.

F. Install materials and equipment with qualified trades people.

G. Maintain uniformity of manufacture for equipment used in similar applications and sizes.

H. Applicable equipment and materials to be listed by Underwriters Laboratories and manufactured in accordance with ASME, AWWA, or ANSI standards, and as approved by Authorities Having Jurisdiction. The energy-using products shall be certified for use in the State of California and meet State energy efficient standards.

I. Fully lubricate equipment when installed.

J. Do not operate air systems until ductwork is complete, temporary filters are in place and construction debris is removed. Provide 1-inch thick fiberglass filter media across the face of each return air opening prior to start of each air system during temporary system operation and system clean-out.

K. Do not operate water or steam systems until piping has been cleaned and start-up strainers are in place.

L. Install floor-mounted equipment on a 4-inch high concrete pad. Concrete work shall be provided by another trade. Coordinate size and location with actual equipment used and accepted layout shop drawings.

M. Secure equipment with bolts, washers and locknuts of ample size to support equipment. Embedded anchor bolts to have bottom plate and pipe sleeves. Grout machinery set in concrete under entire bearing surface. After grout has set, remove wedges, shims and jack bolts and fill space with grout.

N. Locate valves, traps, damper operators, dielectric unions, access doors, etc., to be easily accessible, either in mechanical spaces or through access panels specified. Obtain Architect's approval of access panel locations.

O. Follow manufacturers' recommendations and instructions for installing, connecting, and adjusting equipment. Provide a copy of such instructions at the equipment during installation.

P. Pressure vessels and relief valves shall be selected, built and labeled in accordance with ASME.

Q. Equipment capabilities, etc., are scheduled or specified for job site operating conditions. Equipment sensitive to altitude shall be derated with the method of derating identified on shop drawings.

2.2 ALTERNATIVE EQUIPMENT AND MATERIALS

A. Contract Documents are based on materials specified and on equipment manufacturers indicated. Acceptance of alternative equipment manufacturers does not relieve Contractor of the responsibility to provide equipment and materials, which meet the quality and performance as stated or implied in the Contract Documents.

B. Equipment manufacturers listed in individual sections are acceptable for this project, subject to requirements of Contract Documents.

C. Submit proposals to supply alternate materials or equipment, in writing, with sufficient lead time for review prior to the date equipment must be ordered to maintain project schedule. Reimburse Owner for costs associated with the review of the proposed alternative whether alternative is accepted or rejected.

D. Include revisions required to adapt alternatives in such proposals, including revisions by other trades. No increase in the contract price will be considered to accommodate the use of alternative equipment.

E. Wherever quality standards (such as serviceability, energy efficiency, longevity or durability) and operating results (such as noise levels, quantity delivered or pressure obtained) are specified or scheduled, or when the manufacturer and size of equipment, for which such operating results are published or determinable, is specified, the substitution being proposed must conform

DocuSign Envelope ID: 330DEBD6-9A9E-4F34-BDCC-1AC1BAA701E9

substantially to the quality and quantities specified or implied. The substitution must fit into available space conditions and must function properly in coordination with the rest of the system.

F. Proposed changes and substitutions of systems, equipment and manufacturers shall be submitted and include the following information with the proposal:
   1. A description of the difference between the existing contract requirements and that proposed, the comparative features of each, and the effect of the change on the end result performance. Include the impact of all changes on other contractors and acknowledge the inclusion of additional costs to other trades.
   2. Schematic drawings and details to supplement the description.
   3. A list of the contract requirements that must be revised if the change is accepted, including any specification revisions.
   4. Complete list of materials and equipment proposed for use in the change.
   5. Include a description and estimate of costs the Owner may incur in implementing the change, such as additional space requirements, permits, architectural and aesthetic impact, design costs, tests, permits evaluation, operating and support costs.
   6. A projection of any effects the proposed change would have on collateral costs to the Owner.
   7. A statement of the time by which a contract modification accepting the change must be issued, noting any effect on the contract completion time or the delivery schedule.
   8. A statement indicating the reduction to the contract price if the Owner accepts the change. Be responsible for appropriate modifications to all trades.

PART 3 - EXECUTION

3.1 FEES

A. Pay all required fees and obtain required permits related to the mechanical installation.

B. Pay royalties or fees in connection with the use of patented devices and systems.

C. Provide controlled or witnessed inspection where required by Authorities Having Jurisdiction or by these specifications.

3.2 SUBMITTALS AND REVIEWS

A. Submit shop drawings, manufacturer's data, samples and test reports as specified.

B. Within two (2) months after notice to proceed by the Owner or Owner's Representative, or after execution of Owner/Contractor Agreement, submit a complete typed list of all mechanical equipment manufacturers and material suppliers for the equipment proposed to be provided on this project as well as names of all subcontractors.

C. Within three (3) months after notice to proceed by the Owner or Owner's Representative or after execution of Owner/Contractor Agreement, prepare an index of all submittals for the project. Include a submittal identification number, a cross-reference to the specification sections or drawing number, and an item description. Prefix the submittal identification number by the specification sections to which they apply. Indicate, on each submittal, the submittal identification number in addition to the other data specified. All subcontractors shall utilize the assigned submittal identification number.

D. After the Contract is awarded, obtain complete shop drawings, product data and samples from the manufacturers, suppliers, vendors, and all subcontractors, for all materials and equipment as specified. Submit data and details of such materials and equipment for review. Prior to submission, certify that the shop drawings, product data and samples are in compliance with the Contract Documents. Check all materials and equipment upon their arrival on the job site and verify their compliance with the Contract Documents. Modify any work, which proceeds prior to receiving accepted shop drawings as required to comply with the Contract Documents and the shop drawings.

E. Review of submittals is for general compliance with the design concept and Contract Documents. Comments or absence of comments does not relieve the Contractor from compliance with the Contract Documents. The Contractor remains solely responsible for details and accuracy, for

DocuSign Envelope ID: 330DEBD6-9A9E-4F34-BDCC-1AC1BAA701E9

confirming and correlating all quantities and dimensions, for selecting fabrication processes, for techniques of construction, for performing the work in a safe manner, and for coordinating the work with that of other trades.

F. No part of the work shall be ordered, procured, started in the shop or in the field until the shop drawings and samples for that portion of the work have been submitted, reviewed and returned with either “No Exceptions Noted” or “Exceptions Noted” marked on the submission.

G. A minimum period of ten (10) working days, exclusive of transmittal time, will be required in the Architect/Engineer’s office each time a shop drawing, product data and/or samples are submitted for review. This time period must be considered by the Contractor in the scheduling of the work.

H. Submit three (3) bond prints of all items requiring shop drawings. Submit three (3) copies of manufacturer’s product submittals. Two (2) copies of submittals will be returned. Additional copies are the responsibility of the Contractor. Electronic media will not be reviewed without prior approval by the Architect.

I. Submissions will be stamped as follows:

Stamp	Interpretation
No Exceptions Noted	Fabrication, manufacture, or construction may proceed providing submittal complies with the Contract Documents.
Exceptions Noted: [ ] Resubmit for Record [ ] No Resubmission Required	Fabrication, manufacture, or construction may proceed providing submittal complies with the Contract Documents and Engineer’s notations are complied with. Within this category are two options. A resubmission for our records is required when corrections are necessary. A resubmission is not required if there are only minor comments.
Revise and Resubmit	The submittal does not comply with the Contract Documents; do not proceed with fabrication, manufacture, or construction. The work and shop drawings are not permitted at the job site. Resubmit appropriate shop drawings.

J. Submit materials and equipment by manufacturer, trade name and model number. Include clear, legible copies of applicable brochure or catalog material. Maintenance and operating manuals are not suitable substitutes for shop drawings.

K. Identify each sheet of printed submittal pages (using arrows, underlining or circling) to show applicable sizes, types, model numbers, ratings, capacities and options actually being proposed. Cross out non-applicable information. Note specified features such as voltages, motor efficiencies, special tank linings, pump seals, materials or paint finishes. Cross out all references to “options”. Cross out statements such as “subject to change without notice” or “not for construction”. Anything not specifically excluded is assumed to be included.

L. Include dimensional data for roughing in and installation, technical data sufficient to verify that equipment meets requirements of the Contract Documents. Include wiring, piping and service connection data, motor sizes complete with voltage ratings, and schedules.

M. Maintain a complete set of the most current reviewed and stamped shop drawings and product data on site.

N. Prepare and submit detailed shop drawings for ductwork, piping work and other distribution services in minimum ¼-inch to 1-foot scale, including elevations and locations and sizes of openings in floor decks, walls and roofs.

O. The work described in shop drawing and product data submittals shall be carefully checked by all trades for clearances (including those required for code compliance, maintenance and servicing),

DocuSign Envelope ID: 330DEBD6-9A9E-4F34-BDCC-1AC1BAA701E9

field conditions, maintenance of architectural conditions and proper coordination with other trades on the job. Each submitted shop drawing to include a certification that related field conditions and requirements have been checked by all Contractors and Subcontractors and that conflicts do not exist.

P. The Contractor is not relieved of the responsibility for dimensions or errors that may be contained on submissions or for deviations from requirements in the Contract Documents. The noting of some errors but overlooking others does not grant the Contractor permission to proceed in error. Regardless of any information contained in the shop drawings, product data and samples, the Contract Documents govern the work and are neither waived nor superseded in any way by the review of shop drawings, product data and samples.

Q. Inadequate or incomplete shop drawings, product data and/or samples will not be reviewed and will be returned to the Contractor for resubmittal.

R. Indicate the following in the lower right hand corner of each shop drawing, and on the front cover of each product data brochure: the submittal identification number; title of the sheet or brochure; name and location of the Project; names of the Architect, Engineer, Contractor, Subcontractor, Manufacturer, Supplier, and Vendor; the date of submittal; and the date of each correction, version and revision. Number all pages and drawings in product data brochures, test reports or submittals consecutively from beginning to end. Unless the above information is included, the submittal will be returned for resubmission. Resubmittals of shop drawings or product data or brochures shall include a cover letter summarizing the corrections made in response to the review comments.

3.3 COORDINATION OF WORK

A. The Contract Documents establish scope, materials and quality but are not detailed installation instructions. Drawings are diagrammatic.

B. The Contract Documents show the general arrangement of equipment, ductwork, piping and accessories. Follow these drawings as closely as the actual construction and the work of other trades will permit. Provide offsets, fittings, and accessories, which may be required but not shown on the Drawings. Investigate the site and review drawings of other trades to determine conditions affecting the work and provide such work and accessories as may be required to accommodate such conditions.

C. Certain products will be provided by other trades. Examine the Contract Documents to ascertain the requirements for installation of these products.

D. Carefully check space requirements with other trades to insure that material can be installed in the spaces allotted.

E. Wherever work interconnects with work of other trades, coordinate with other trades to insure that they have the information necessary so that they may properly install the necessary connections and equipment. Identify items (valves, dampers, coils, etc.) requiring access in order that the ceiling and partition contractors can install access doors and panels in the correct locations.

F. Consult with other trades regarding equipment so that, wherever possible, motors, motor controls, pumps and valves are of the same manufacturer.

G. Furnish and set sleeves for passage of pipes, ducts and conduits through structural masonry and concrete walls, roofs and floors and elsewhere as will be required for the proper protection of each pipe and duct passing through building surfaces.

H. Install firestopping around all pipes, conduits, etc., which pass through rated walls, partitions and floors in strict accordance with the manufacturer's published approval listing and rating.

I. Provide detailed information on openings and holes required in structural elements and pre-cast panels or components for mechanical work.

J. Provide required structural or architectural supports and hangers for ductwork, piping and equipment, designed so as not to exceed allowable loadings of structures.

K. Examine and compare the Contract Drawings and Specifications with the drawings and specifications of other trades, report any discrepancies between them to the Architect and obtain written instructions for changes necessary in the work. Install and coordinate the work in

DocuSign Envelope ID: 330DEBD6-9A9E-4F34-BDCC-1AC1BAA701E9

cooperation with other related trades. Before installation, make proper provisions to avoid interferences.

L. Wherever the work is of sufficient complexity, prepare additional detail drawings to scale to coordinate the work with the work of other trades. Detailed work shall be clearly identified on the Drawings as to the area to which it applies. Submit these drawings to the Architect for review. At completion include a set of these drawings with each set of record drawings.

M. Before commencing work, examine adjoining work on which this work is in any way dependent and report conditions that prevent performance of the work. Become thoroughly familiar with actual existing conditions to which connections must be made or which must be changed or altered.

N. Adjust location of pipes, ducts, panels, equipment, etc., to accommodate the work to prevent interferences, both anticipated and encountered. Determine the exact route and location of each pipe and duct prior to fabrication.
   1. Right-of-Way: Lines which pitch have right-of-way over those which do not pitch. For example: condensate, steam, and plumbing drains normally have right-of-way. Lines whose elevations cannot be changed have right-of-way over lines whose elevations can be changed.
   2. Provide offsets, transitions and changes in direction of pipes and ducts as required to maintain proper head room and pitch on sloping lines. Provide traps, air vents, drains, etc., as required to effect these offsets, transitions and changes in direction.

O. Install mechanical work to permit removal (without damage to other parts) of hydronic coils, heat exchanger, boiler or chiller tube bundles, heat exchanger plates, controls, fan shafts and wheels, smoke detectors, filters, belt guards, sheaves and drives, and any other parts requiring periodic replacement or maintenance. Arrange pipes, ducts, and equipment to permit access to valves, cocks, traps, starters, motors, and control components, and to clear the openings of swinging doors and access panels.

P. Changes in the cross-sectional dimensions of ductwork are permissible when required to meet job conditions. Maintain at least the same equivalent cross-sectional duct area in accordance with the latest edition of the ASHRAE Guide. Secure the approval of the Architect prior to fabrication of ductwork requiring these changes.

Q. Provide access panels in equipment, ducts, etc., as required for inspection and maintenance of concealed or internal equipment, dampers, plenums, smoke detectors, humidifiers, controls, etc.

R. In cases of doubt as to the work intended, or in the event of need for explanation thereof, request supplementary instructions from the Architect.

3.4 CONTRACTOR'S COORDINATION DRAWINGS

A. The Contractor shall coordinate efforts of all trades and shall furnish (in writing, with copies to the Architect) any information necessary to permit the work of all trades to be installed satisfactorily and with the least possible interference or delay.

B. The Contractor and all trade contractors shall prepare a complete set of construction Coordination Drawings indicating the equipment actually purchased and the exact routing for all lines such as piping, conduit, ductwork, etc., including conduit embedded in concrete floors and walls. The Coordination Drawings shall be submitted complete to the Architect and the Engineer within three (3) months after notice to proceed is given and in compliance with the construction schedule for the project. The sheet metal drawings, at a scale of not less than ¼-inch to 1-foot, shall serve as the base drawings to which all other Contractors shall add their work. Each separate Trade Contractor shall draw their work on separate layers with different color assignments to facilitate coordination. Each Coordination Drawing shall be completed and signed off by the other Trade Contractors and the Contractor prior to the installation of the HVAC, plumbing, electrical and fire sprinkler work in the area covered by the specific drawing. The Contractor's work shall be installed according to the shop drawings and Coordination Drawings. If the Contractor allows one trade to install their work before coordination with the work of other trades, the Contractor shall make all necessary changes to correct the condition at no additional cost to the Owner.

DocuSign Envelope ID: 330DEBD6-9A9E-4F34-BDCC-1AC1BAA701E9

C. The Contractor's Coordination Drawings shall indicate structural loads at support points for all piping 10-inch and larger, racked piping, and racked conduit. Submit to Structural Engineer for review and approval. The elevation, location, support points, static, dynamic and expansion forces and loads imposed on the structure at support and anchor points shall be indicated. All beam penetrations and slab penetrations shall be indicated and sized and shall be coordinated. Work routed underground or embedded in concrete shall be indicated by dimension to column and building lines and shall be coordinated. Coordination Drawings shall document all required structural penetrations for initial construction. Penetrations shall be dimensioned for walls, floors and roofs. These structural coordination requirements require review and approval by the Structural Engineer prior to completion and submittal of the Drawings.

D. This requirement for Coordination Drawings shall not be construed as authorization for the Contractor or trade contractors to make any unauthorized changes to the Contract Documents. Contract document space allocations shall be maintained such as ceiling height, designated clearance for future construction and flexibility, chase walls, equipment room size, unless prior written authorization is received from the Architect to change them.

E. Prior to final acceptance of the work, the Contractor shall submit the Coordination Drawings as part of the Record Drawing submittal.

3.5 EXAMINATION OF SITE

A. The Contract Documents do not make representations regarding the character or extent of the subsoils, water levels, existing structural, mechanical and electrical installations, above or below ground, or other sub-surface conditions which may be encountered during the work.

B. Evaluate existing conditions that may affect methods or cost of performing the work, based on examination of the site or other information. Failure to examine the Drawings or other information does not relieve the Contractor of responsibility for satisfactory completion of the work.

3.6 EXCAVATION AND BACKFILL

A. Provide excavation for the work of this Division. Excavate all material encountered, to the depths indicated on the Drawings or as required. Remove excavated materials not required or suitable for backfill from the site. Provide grading as may be necessary to prevent surface water from flowing into trenches or other excavations. Remove any water that accumulates. Provide sheeting and shoring as may be necessary for the protection of the work and for the safety of personnel.

B. Provide trenches of widths necessary for the proper execution of the work. Grade bottom of the trenches accurately to provide uniform bearing and support the work on undisturbed soil at every point along its entire length. Except where rock is encountered, do not excavate below the depths indicated. Where rock excavations are required, excavate rock to a minimum overdepth of four inches below the trench depths indicated on the Drawings or as required. Backfill overdepths in the rock excavation and unauthorized overdepths with loose, granular, moist earth, thoroughly machine tamped to a compaction level of at least 95 percent of standard proctor density or 75 percent relative density or as specified by the Architect. Whenever unstable soil that is incapable of properly supporting the work is encountered in the bottom of the trench, remove soil to a depth required and backfill the trench to the proper grade with coarse sand, fine gravel or other suitable material.

C. Excavate trenches for utilities that will provide the required minimum depths of cover from existing grade or from indicated finished grade, whichever is lower, unless otherwise specifically shown.

D. Trenches shall not be placed within ten (10) feet of foundation or soil surfaces that must resist horizontal forces.

E. Do not backfill trenches until all required tests have been performed and the installation observed by the Architect. Comply with the requirements of other sections of the specifications. Backfill shall consist of non-expansive material with limited porosity. Deposit backfill in 6-inch thick layers and tamp carefully until the mechanical work is covered by not less than 12 inches of material.

DocuSign Envelope ID: 330DEBD6-9A9E-4F34-BDCC-1AC1BAA701E9

Backfill and tamp remainder of trench at 1-foot intervals until complete. Uniformly grade the finished surface.

3.7 CUTTING AND PATCHING

A. Where cutting, channeling, or drilling of floors, walls, partitions, ceilings or other surfaces is necessary from the proper installation, support or anchorage of ductwork, piping or equipment, lay out the work carefully in advance. Repair any damage to the building, piping, equipment or finishes using skilled tradesmen for all required work.

B. Do not cut, channel or drill unfinished masonry, tile, etc. unless written permission is obtained from the Architect. Perform this work in a manner acceptable to the Architect.

C. Where ductwork, piping or equipment are mounted on a painted finished surface, or a surface to be painted, paint to match the surface. Cold galvanize bare metal whenever support channels are cut.

D. Provide slots, chases, openings and recesses through floors, walls, ceilings and roofs as required. Where these openings are not provided, provide cutting and patching to accommodate penetrations at no additional cost to the Owner.

3.8 PROHIBITED LABELS AND IDENTIFICATIONS

A. Prohibited Markings: In all public areas, tenant areas, storage areas and similar locations within the project, the inclusion or installation of any equipment, fixture or assembly which bears on any exposed surface any name, trademark, or other insignia which is intended to identify the manufacturer, the vendor, or other source(s) from which such object has been obtained, is prohibited.

B. Exception: Required Underwriters Laboratories labels shall not be removed nor shall identification specifically required under the various technical sections of the Specifications be removed.

3.9 EQUIPMENT PAD AND ANCHOR BOLTS

A. Provide concrete pads under all floor-mounted mechanical equipment. This includes electrical components, equipment mounted on legs and pipe support stands. Equipment pads shall conform to the shape of the piece of equipment it serves with a minimum 2-inch margin around the equipment and supports. Pads shall be a minimum of 4 inches high and made of a minimum 28-day, 2,500-psi concrete reinforced with 6-inch by 6-inch 6/6-gauge welded wire mesh. Trowel tops and sides of pad to smooth finishes, equal to those of the floors, with all external corners bullnosed to a ¾-inch radius. Use shop drawings stamped “NO EXCEPTIONS NOTED” or “EXCEPTIONS NOTED” for dimensional guidance in sizing pads.

B. Provide galvanized anchor bolts for all equipment placed on concrete equipment pads, inertia blocks, or on concrete slabs. Verify bolts size, number and embed depth recommended by the manufacturer of the equipment with seismic calculations as specified, and locate by means of suitable templates. Equipment installed on vibration isolators shall be secured. Secure the isolator to the floor, pad, or support as recommended by the vibration isolation and seismic restraint manufacturer.

C. Where equipment is mounted on gypsum board partitions, the mounting screws will pass through the gypsum board and be securely attached to the partition studs. As an alternative, the mounting screws may pass through the gypsum board and be securely attached to 6-inch square, 18-gauge galvanized metal backplates that are attached to the gypsum board with an approved non-flammable adhesive. Toggle bolts installed in gypsum board partitions are not acceptable.

3.10 DELIVERY, DRAYAGE AND HAULING

A. Include all drayage, hauling, hoisting, shoring and placement in the building of equipment specified and be responsible for the timely delivery and introduction of equipment to the project as required by the construction schedule. If any item of equipment is received prior to the time it is required, be responsible for its proper storage and protection until the time it is required. Pay for all costs of demurrage or storage.

DocuSign Envelope ID: 330DEBD6-9A9E-4F34-BDCC-1AC1BAA701E9

B. If equipment is not delivered or installed at the project site in a timely manner as required by the project construction schedule, the Contractor shall be responsible for disassembly, re-assembly, manufacturer's supervision, shoring, general construction modification, delays, overtime costs, etc., at no additional cost to the Owner.

3.11 EQUIPMENT AND MATERIAL PROTECTION

A. Protect the work, equipment and material of other trades from damage by work or workers of this trade, and correct damage caused without additional cost to the Owner.

B. The Contractor shall be responsible for all work, materials and equipment until finally inspected, tested and accepted. Protect work against theft, injury or damage; and carefully store material and equipment received on site that is not immediately installed. Close open ends of work with temporary covers or plugs during construction to prevent entry of dust, dirt, water or other obstructing material. Cover and protect equipment and materials from damage due to water, moisture, humidity, paint, spray-on fireproofing, construction debris, etc. Store equipment subject to moisture damage, such as insulation or electrical components in dry heated spaces.

C. Provide adequate means for fully protecting finished parts of the materials and equipment against damage from whatever cause during the progress of the work until final acceptance. Protect materials and equipment in storage and during construction in such a manner that no finished surfaces will be damaged or marred, and moving parts are kept clean and dry. Do not install damaged items; take immediate steps to obtain replacement or repair. Replace all wet or damp insulation or acoustic lining.

3.12 ELECTRICAL EQUIPMENT AND ELECTRICAL ROOM PRECAUTIONS

A. Do not install piping, equipment or ductwork for heating, ventilation, air conditioning, plumbing or any piping systems not included as part of the electrical work, in the following rooms: switchgear, transformer, generator, elevator equipment, telephone, fire command, security, dimmer or electrical equipment rooms.

B. Do not install piping, equipment or ductwork above switchboards, disconnects, panelboards, dimmers, control panels, VFDs, motor control centers, individual motor controllers, electronics, etc or the code-required service space for these electrical devices.

3.13 EQUIPMENT GUARDS

A. Provide easily (without tools) removable expanded metal guards for all hot surfaces, belts, couplings, exposed fan inlets and outlets, and other moving parts of machinery. Provide tachometer openings in the guards at least 2 inches in diameter, for all belt-driven, gear-driven or variable speed machinery. Comply with OSHA requirements for all equipment guards.

3.14 LUBRICATION

A. Provide means for lubricating all bearings and other machine parts. If a part requiring lubrication is concealed or inaccessible, extend a metallic lubrication tube with suitable fitting to an accessible location and identify it with permanent laminated plastic nameplates. Identify this location in the maintenance manual.

B. After installation, properly lubricate all parts requiring lubrication and keep them adequately lubricated with a lubricant recommended by the equipment manufacturer until Owner acceptance.

3.15 DATE OF COMPLETION AND TESTING OF MECHANICAL SYSTEMS

A. Comply with the project construction schedule for the date of final performance and acceptance testing, and complete work sufficiently in advance of the Contract completion date to permit the execution of the testing prior to occupancy and the Contract closeout. Complete any adjustments and/or alterations that the final acceptance tests indicate as necessary for the proper functioning of all equipment prior to the completion date. See individual sections for extent of testing required.

B. Provide a detailed schedule of completion indicating when each system is to be completed and outlining when tests will be performed. Submit completion schedule for review within three (3)

DocuSign Envelope ID: 330DEBD6-9A9E-4F34-BDCC-1AC1BAA701E9

months after the notice to proceed by Owner or Owner's Representative has been given. Update this schedule periodically as the project progresses.

3.16 OPERATING INSTRUCTIONS AND OPERATOR TRAINING

A. Provide the services of factory-trained specialists to supervise the operation of all equipment and systems specified and train the Owner's operating and maintenance personnel for a three (3) day operating/instruction period. Operating instruction time is defined as straight time working hours and not including nights, weekends or travel time to and from the project. Refer to individual sections for additional training and instruction by manufacturer's trained specialists.

B. Notify the Owner in writing at least three (3) weeks before the operating/instruction period begins. Do not commence until the Owner has issued written acceptance of the starting time and schedule.

C. In addition to the operating/instruction period, organize and conduct a seminar to instruct the Owner's Representatives in the operation and general preventative maintenance of equipment and systems provided at the completion of the project.

D. Instruct Owner's operating personnel in proper starting sequences, operation, shut-down, and maintenance procedures, including normal and emergency procedures.

E. Make arrangements to give instructions by system and not by building areas.

F. Provide services of qualified personnel, including each sub-trade, each major equipment supplier to attend seminar and instruct on respective equipment or systems. Seminar shall be conducted by the Contractor and may be videotaped and attended by the Architect or Architect's Representative.

G. Submit seminar agenda, schedule and list of representatives to the Owner for review thirty (30) days prior to seminar. Confirm attendance at seminar by written notification to participants.

H. At seminar, submit final copies of record drawings and operating and maintenance manuals to Owner.

I. Submit a written record of the seminar, complete with an attendance list to the Owner.

3.17 OPERATING AND MAINTENANCE MANUALS

A. Provide operating instructions and maintenance manuals for all equipment and materials furnished under this Division.

B. Submit three (3) final copies of operating and maintenance data books for review at least ten (10) weeks before the completion date. Provide 8.5-inch by 11-inch, expanding spine catalog binders bound with heavy red fabric, hot stamp lettering on front and spine identifying project name and Owner's name. Assemble data in a completely indexed volume or volumes and identify the size, model, and features indicated for each item.

C. Index the maintenance manual according to the following system:
   1. Tab – 1.0 Mechanical Systems: Title page identifying project, Owner, Contractor and Engineer with clear plastic protection cover.
   2. Tab – 1.1 List of HVAC, Plumbing and Fire Protection Drawings.
   3. Tab – 1.2 Description of Systems: Provide complete descriptions of the operating sequence for each system. Include detailed system description, with individual components described, and description of how components interface with others and to the complete system.
   4. Tab – 1.3 Operating Division: Provide information on locations of components, how to energize switches and controls, how components interface with other components, operation of controls including operational sequence, operational changes for cooling, heating or changeover, how to accomplish the changeover, complete troubleshooting sequence, and failure and safeguards to indicate if equipment goes off-line.
   5. Tab – 1.4 Maintenance and Lubrication Division: Provide general maintenance and lubrication schedule for major components and include daily, weekly, monthly, quarterly, semiannual and yearly checks and tasks. Explain how to execute maintenance tasks required for typical equipment such as bearings, drives, motors and filters. Compile this information for equipment separate from shop drawings.

DocuSign Envelope ID: 330DEBD6-9A9E-4F34-BDCC-1AC1BAA701E9

6. Tab – 1.5 List of Equipment Suppliers and Contractors: Provide list of equipment suppliers and contractors, including street addresses, website addresses, fax and toll-free telephone numbers.
7. Tab – Certification (2.0, 2.1, etc.): Include copy of test data on degreasing and flushing of hydronic systems, analysis of system water taken at time system was put into operation, hydrostatic or air tests performed on piping systems, equipment alignment certifications, copy of balancing data for air and water systems, copy of valve and damper identification and pipe color code and inspection approval certificates from Authorities Having Jurisdiction.
8. Tab – Shop Drawings and Maintenance Bulletins (3.0, 3.1, 3.2, etc.): Provide material received in compliance with clause "Submittals and Reviews".

D. The manual divider and tabs shall be laminated mylar plastic and colored as follows:

Mechanical Systems	1.0	–	1.5	Orange
Certification	2.0	–	2.4	Green
Shop Drawings & Maintenance	3.0	–	3.17	Yellow

E. Plastic tabs with typewritten card insertions will not be accepted.

F. Maintenance information shall include complete lubrication, cleaning, and servicing data compiled in clearly and easily understandable format. Show model and serial number of each piece of equipment, complete lists of replacement parts, capacity ratings, and actual loads.

G. Provide the following equipment maintenance information where applicable:
1. Identifying name and number
2. Locations (where several similar items are used, provide a list)
3. Complete nameplate data
4. Parts list
5. Performance curves and data
6. Wiring diagrams
7. Lubrication charts
8. Manufacturers' recommended operating and maintenance instructions, with all non-applicable information deleted
9. List of spare parts recommended for normal service requirements
10. Assembly and disassembly instructions with exploded view Drawings, where necessary
11. Trouble shooting diagnostic instructions, where applicable

3.18 RECORD DRAWINGS

A. The Contractor shall maintain on a daily basis at the project site a complete set of Record Drawings. The Record Drawings shall initially consist of a set of blueline prints or AutoCAD files of the Contractor's Coordination Drawings. The prints shall be marked or the AutoCAD files electronically updated to show the precise location of all buried or concealed work and equipment, including embedded piping and valves, and all changes and deviations in the mechanical work from that shown on the Contract Documents. This requirement shall not be construed as authorization for the Contractor to make changes in the layout or work without definite written instructions from the Architect or Engineer. The updated Coordination Drawings shall be used to produce the final Record Drawings that shall be delivered to the Owner on electronic media upon project completion.

B. Record dimensions clearly and accurately to delineate the work as installed. Suitably identify locations of all equipment by at least two (2) dimensions to permanent structures.

DocuSign Envelope ID: 330DEBD6-9A9E-4F34-BDCC-1AC1BAA701E9

C. The Contractor and subcontractor shall mark all in-progress Record Drawings on the front lower right hand corner with a rubber stamp impression or an AutoCAD image similar to the following:

RECORD DRAWING
(3/8-inch high letters)

To be used for recording Field Deviations
and Dimensional Data Only
(5/16-inch high letters)

D. Upon completion of the work, the Contractor and subcontractors shall certify all Record Drawings on the front lower right hand corner adjacent to the above marking with a rubber stamp impression or an AutoCAD image similar to the following:

RECORD DRAWING
CERTIFIED CORRECT
(3/8-inch high letters)

(Printed Name of General Contractor)
(5/16-inch high letters)

Date:

(Printed Name of Subcontractor)
(5/16-inch high letters)

Date:

E. Prior to final acceptance of the work of this Division, the Contractor shall submit properly certified Record Drawings to the Architect and Engineer for review and shall make changes, corrections, or additions as the Architect and/or Engineer may require to the Record Drawings. After the Architect's and Engineer's review, and any required Contractor revisions, the Record Drawings shall be delivered to the Owner on electronic media. The Architect and Engineer do not assume any responsibility for the accuracy or completeness of the Record Drawings.

3.19 CERTIFICATION

A. Any certifications required by the Specifications, in addition to those required for shop drawings, product data, equipment and other items, are to be so certified in writing by the Owner, a Partner, or a Corporate Officer of the firm required to provide the Certification, or by another person duly authorized to sign binding agreements for and on behalf of the Owner, Partner or Corporation.

3.20 FINAL REVIEW

A. At a time designated by the Owner, the entire system shall be reviewed for compliance with the Contract Drawings and Specifications. Be available at all times during this review.

B. Demonstrate to the Owner and/or the Architect’s personnel prior to the Final Review that systems and equipment have been properly balanced and adjusted and are in compliance with the requirements of the Contract Documents. After these demonstration tests are satisfactorily completed, but prior to the Final Review, submit a written certification that: 1) attests to the Contract Document compliance for this project; and 2) certifies that the equipment and materials installed in this project contain no lead, asbestos or PCB. Prior to the final review, the Contractor shall confirm the following items regarding the status of key elements of the work. Negative

DocuSign Envelope ID: 330DEBD6-9A9E-4F34-BDCC-1AC1BAA701E9

responses to any of the items indicate that the construction is not substantially complete, and the building is not ready for a final review. The Contractor shall confirm the following in writing:

1. Building air systems (fans, air handling units, etc.) are completely installed, commissioned and operating.
2. Building hydronic systems are completely installed, commissioned, operating and pressure tested.
3. Building management system is installed, commissioned and operating.
4. Building has normal electrical power.
5. The emergency or stand-by power system has been started up, commissioned, and is standing by.
6. Building systems have been cleaned.
7. Seismic restraints have been inspected as specified. Any required special inspections have been completed.
8. Building systems have been balanced and copy of balance report submitted to the Architect.
9. Building fire and life safety systems have been tested and accepted by the local authorities. Any required special inspections have been completed.
10. All final wiring connections have been rechecked.
11. All base building lighting systems are completely installed and operating.
12. The domestic cold water system has been installed, flushed, disinfected, tested and operating.
13. The domestic hot water systems are completely installed, flushed, disinfected, tested and operating.
14. The sanitary sewer and storm sewer systems are completely installed, operating, connected to the required city, public or private utilities and pressure tested.
15. The fire protection systems are completely installed, operating, connected to the required city, public or private utilities and pressure tested.
16. There are no deviations or non-compliance with the Contract Documents; otherwise, provide a detailed account of any and all deviations or non-compliance.
17. All items on field review reports have been responded to in writing and are resolved to the satisfaction of the Owner.
18. All outstanding items on submittals and shop drawings have been addressed in writing and are resolved to the satisfaction of the Owner.
19. Schedule the final review only after providing written confirmation of all items above. Provide a minimum of ten (10) days notice.

C. Operate the entire system properly with all systems balanced and all controls adjusted.

D. Certificates and Documents required by the Contract shall be presented to the Architect at least two (2) weeks prior to the Final Review.

E. After the Final Review, any changes or corrections noted as necessary for the work to comply with the Contract Documents shall be accomplished without delay in order to secure final acceptance of the work.

END OF SECTION

DocuSign Envelope ID: 330DEBD6-9A9E-4F34-BDCC-1AC1BAA701E9

SECTION 99-230513

ELECTRIC MOTORS FOR HVAC EQUIPMENT

PART 1 - GENERAL

1.1 WORK INCLUDED

A. The work of this Section shall include, but is not limited to the following:
   1. Constant speed, variable speed and two-speed squirrel cage, polyphase electric induction motors for mechanical equipment.
   2. Provide electric motors designed and rated for use on Alternating Current Variable Frequency Drives (VFD) where applicable.

1.2 RELATED DOCUMENTS

A. Section 99-230501 – HVAC General Provisions

B. Section 99-230514 – Variable Frequency Drives for HVAC

C. Section 99-230548 – Vibration and Seismic Controls for HVAC

D. Section 99-233319 – Acoustics

E. Division 26 – Electrical Specifications

1.3 REFERENCE STANDARDS

A. Institute of Electrical and Electronic Engineers (IEEE)
   1. ANSI/IEEE 112 – 2004: Standard Test Procedure for Polyphase Induction Motors and Generators

B. National Electrical Manufacturers Association (NEMA)
   1. ANSI/NEMA MG-1 – 2006 Revised 2007: Motors and Generators

C. National Fire Protection Association (NFPA)
   1. ANSI/NFPA 70 – 2008: National Electric Code (NEC)

D. Underwriters Laboratories Inc. (UL)

1.4 QUALITY ASSURANCE

A. Electrical Coordination
   1. All starters, overload relay heater coils, disconnect switches and fuses, relays, wire, conduit, pushbuttons, pilot lights, and other devices required for the control of motors or electrical equipment are provided as specified by Division 26.
   2. Division 26 drawings and specifications show number and horsepower rating of all motors furnished by this Contractor. Should any discrepancy in size, horsepower rating, electrical characteristics or means of control be found for any motor or other electrical equipment after contracts are awarded, Contractor shall immediately notify the Architect of such discrepancy. Refer to Section 99-230501 – HVAC General Provisions.
   3. Furnish project-specific wiring diagrams to Division 26 Contractor for all equipment and devices furnished under this Section.

B. Motors intended for variable speed applications shall have UL approval for use on “Generic” pulse width modulated and/or 6-Step waveforms. Motors requiring one specific manufacturer of VFD to meet the UL criteria are not acceptable.

C. Motors shall conform to applicable requirements of ANSI, IEEE, NEMA, and NEC standards and shall be UL Listed for the service specified.

D. Furnish motors for starting in accordance with utility requirements and compatible with starters as specified.

1.5 SUBMITTALS

A. Submit motors under the sections covering the driven equipment.

DocuSign Envelope ID: 330DEBD6-9A9E-4F34-BDCC-1AC1BAA701E9

B. Submit motor efficiencies at full load, 75 percent full load, and 50 percent full load.

C. Submit certified dimensions, insulation class, NEMA frame size, materials of construction, base details and mounting details.

D. Include, with the motor-driven equipment submittal, the following motor information: manufacturer, horsepower, voltage, phase, hertz, rpm, full load efficiency. Include project-specific wiring diagrams prepared by the Contractor specifically for this work.

E. Include manufacturer's instructions in the operating and maintenance manuals for the specific equipment. Include the following information, if not previously documented on shop drawings: full load power factor, service factor, NEMA design designation, insulation class, frame type.

PART 2 - PRODUCTS

2.1 ACCEPTABLE MANUFACTURERS

A. Constant Speed Applications: Toshiba Model E.Q.P., Magnetek E-Plus III, Baldor Super E, Reliance XE Premium, General Electric Energy Saver, Marathon Series E

B. Inverter Duty Motors: U.S. Electrical Motors “Inverter Grade”®, Baldor “Inverter Drive”®, or approved equal

2.2 GENERAL

A. Provide electric motors for driving the mechanical equipment. Motors shall be of proper power, construction and speed to suit the specified manufacturers of equipment. If other manufacturers of equipment are accepted, the proper adjustment of motor speed, torque and power must be included without additional cost. Submit drawings for review before the equipment is purchased.

B. One-half horsepower and larger motors shall be rated 200 VAC and suitable for operation on a 208 VAC (plus or minus 5 percent) – 3-phase – 60 hertz nominal electrical supply system.

C. Fan coil unit and fan powered terminal unit motors shall be rated 277 VAC – single phase – 60 hertz and shall be provided with integral thermal overload protection.

D. One-third horsepower and smaller motors shall be rated 120 VAC – single phase – 60 hertz and shall be provided with integral thermal overload protection.

E. Motors shall be generally constant speed, squirrel-cage type, open drip-proof or totally enclosed fan cooled (TEFC) design. Single phase motors shall be high efficiency capacitor start, induction run, or split phase type as approved for the service.

F. Motor temperature rise when operating on a variable frequency drive shall not exceed Class F insulation limits at full load, with 115 degrees C allowable winding hot spot temperature, across its nameplate speed and torque envelope. Sine-wave temperature rise shall be Class F or better.

G. Motors shall have minimum Class B insulation for continuous full load duty at 40 degrees C and a maximum altitude of 3,300 feet above sea level. Where normal operating temperatures will exceed the Class B insulation rating, provide Class F insulation. For all motors driven by variable frequency drives, provide Class H insulation.

H. Motors shall be of quiet operating type, guaranteed to fulfill the specified requirements without producing any objectionable sound exceeding room NC levels as specified. All belt-connected motors shall have adjustable bases and set screws to maintain proper belt tension. Provide proper belt guards, in accordance with OSHA Standards.

I. Motors and accessories shall be UL Listed and comply with NEMA standards.

J. Minimum Service Factor:
   1. Constant speed applications: 1.15.
   2. Variable speed application: Nameplate sine-wave service factor shall be 1.15 or greater.

K. Coordinate the NEMA type of each motor with the torque and inertia load of the equipment served, and the in-rush current characteristics of the motor with the motor starter selection, so that all items furnished constitute a complete motor control and protection package. Motor shall not operate in the 15 percent service factor range.

DocuSign Envelope ID: 330DEBD6-9A9E-4F34-BDCC-1AC1BAA701E9

L. Motors located in ducted air streams or subject to outside air elements shall be totally enclosed fan cooled; others shall be open drip-proof design. Motors one horsepower or larger shall have encapsulated stator windings of the epoxy or silicone type.

M. Fan motors shall be capable of accelerating their respective fans from zero revolutions per minute to design or synchronous revolutions per minute within a maximum of ten seconds.

N. All motors ½ horsepower and larger, except two-speed motors, specially wound motors and in-line pump motors frame size 56 and smaller, shall be high efficiency design with full load efficiencies (in percent) which meet or exceed the values listed below when tested in accordance with NEMA MG:

MOTOR EFFICIENCY BY MOTOR SIZE AND SPEED						
Horsepower	1,200 rpm		1,800 rpm		3,600 rpm	
	ODP	TEFC	ODP	TEFC	ODP	TEFC
½ and ¾	80.0	80.4	82.1	82.7	79.1	78.5
1	82.5	82.5	85.5	85.5	80.0	85.5
1.5	86.5	87.5	86.5	86.5	85.5	86.5
2	87.5	88.5	86.5	86.5	86.5	88.5
3	89.5	89.5	89.5	89.5	86.5	89.5
5	89.5	89.5	89.5	89.5	89.5	91.0

O. Each motor shall be factory-wired to a junction box mounted on the motor or on the driven piece of equipment to facilitate single point of field power connection under Division 26.

2.3 TWO-SPEED MOTORS

A. Advise Division 26 Contractor and verify availability of speed combinations for all two-speed motors. Verify motor starter compatibility for two-speed, two winding and/or two-speed, single-winding.

B. Unless otherwise indicated, three-phase two-speed motors shall be two winding, variable torque and single phase motors shall be capacitor start capacitor run type having two capacitors in parallel with run capacitor remaining in circuit at operating speeds.

PART 3 - EXECUTION

3.1 INSTALLATION

A. When motor will be flexible coupled to the driven device, mount coupling to the shafts in accordance with the coupling manufacturer's recommendations. Using a dial indicator, check angular misalignment of the two shafts; adjust motor position as necessary so that the angular misalignment of the shafts does not exceed 0.002 inches per inch diameter of the coupling hub. Again using the dial indicator, check the shaft for run-out to assure concentricity of the shafts. Adjust as necessary so that run-out does not exceed 0.002 inches. Set all direct driven equipment with not more than one-half of the coupling manufacturer’s recommended maximum tolerance for parallel and angular variance in alignment.

B. Align all belt-driven equipment to provide minimum wear on belts and drives, with belts properly tensioned.

C. Mount motors on a rigid base designed to accept a motor, using shims if required under each mounting foot for a secure and level installation.

D. When motor will be connected to the driven device by means of a belt drive, mount sheaves on the appropriate shafts in accordance with the manufacturer's instructions. Use a straight edge to check alignment of the sheaves; reposition sheaves as necessary so that the straight edge contacts both sheave faces squarely. After sheaves are aligned, loosen the adjustable motor base so that the belt(s) can be added and tighten the base so that the belt tension is in accordance with the drive manufacturer's recommendations. Frequently re-check belt tension and adjust if necessary during the first day of operation and again after 80 hours of operation.

DocuSign Envelope ID: 330DEBD6-9A9E-4F34-BDCC-1AC1BAA701E9

3.2 START UP

A. Coordinate overload heater requirements with motor starter provider.

B. Verify the proper rotation of each three-phase motor as it is being wired or before the motor is energized for any reason.

C. Lubricate all motors requiring lubrication. Record lubrication material used and the recommended frequency of lubrication. Include this information in the maintenance manuals.

END OF SECTION

DocuSign Envelope ID: 330DEBD6-9A9E-4F34-BDCC-1AC1BAA701E9

SECTION 99-230529

HANGERS AND SUPPORTS FOR HVAC

PART 1 - GENERAL

1.1 WORK INCLUDED

A. The work of this Section shall include, but is not limited to, the following:
   1. Pipe, duct and un-isolated equipment hangers, anchors and supports.
   2. Sleeves, escutcheons.
   3. Through-penetration firestopping in fire-rated construction and through-penetration smokestopping in smoke partitions, including methods and materials applied in penetrations and unprotected openings to limit spread of heat, fire, gasses and smoke.

1.2 RELATED DOCUMENTS

A. Section 99-230501 – HVAC General Provisions

B. Section 99-230548 – Vibration and Seismic Controls for HVAC

1.3 REFERENCE STANDARDS

Published specifications standards, tests or recommended methods of trade, industry or governmental organizations apply to work in this Section where cited below:

A. ANSI – American National Standards Institute
   1. ANSI/ASME B31.1 – 2007 Revised 2008: Power Piping

B. ASME – American Society of Mechanical Engineers
   1. ASME B16.19 – 2007: Factory-Made Wrought Butt-Welding Fittings

C. ASTM – American Society for Testing and Materials
   1. ASTM A123 / A123M – 2009: Standard Specification for Zinc (Hot-Dip Galvanized) Coatings on Iron and Steel Products
   2. ASTM B695 – 2004: Standard Specification for Coatings of Zinc Mechanically Deposited on Iron and Steel
   3. ASTM C1107 / C1107M – 2008: Standard Specification for Packaged Dry, Hydraulic-Cement Grout (Nonshrink)
   4. ASTM E814 – 1996 Revised 2009: Standard Test Method for Fire Tests of Penetration Firestop Systems

D. ISO – International Organization for Standardization
   1. ISO 9001 – 2008: Quality Management System Requirements

E. MSS – Manufacturers Standardization Society of the Valve and Fittings Industry Inc.
   1. SP-58-2002: Pipe Hangers and Supports – Materials, Design and Manufacturer
   2. SP-69-2003: Pipe Hangers and Supports – Selection and Application
   3. SP-89-2003: Pipe Hangers and Supports – Fabrication and Installation Practices

F. UL – Underwriters Laboratories Inc.
   1. UL Standard 1479 – 2003 Revised 2008: Fire Tests of Through-Penetration Firestops
   2. UL Fire Resistance – 2009: Fire Resistance Directory set
      a. Through-penetration firestop devices (UL-XHCR)
      b. Fire resistance ratings (UL-BXUV)
      c. Through-penetration firestop systems (UL-XHEZ)
      d. Fill, void, or cavity material (UL-XHHW)
   3. UL Building Materials – 2009: Building Materials Directory
   4. UL Component Listing Test Criteria
   5. Warnock Hersey Mark (Certification of Building Products)

G. California Building Code

H. California Fire Code

DocuSign Envelope ID: 330DEBD6-9A9E-4F34-BDCC-1AC1BAA701E9

1.4 QUALITY ASSURANCE

A. Hangers and supports to be constructed and applied according to the following standards:
   1. Power Piping: ANSI/ASME B31.1.
   2. Duct Hangers: Provide hangers as required per SMACNA Standards for ductwork pressure classification.
   3. Firestopping materials shall have been tested to provide fire rating at least equal to that of the construction.
   4. Deliver products in original, unopened packaging with legible manufacturer's identification.
   5. Mechanical sleeve seals shall be manufactured in an ISO 9001:2008 certified facility.
   6. Submit written guarantee agreeing to repair or replace joint sealers which fail in joint adhesion, extrusion resistance, migration resistance, or general durability or appear to deteriorate in any other manner not clearly specified by submitted manufacturer's data as an inherent quality of the material for the exposure indicated. The guarantee period shall be one year from date of substantial completion.

1.5 SUBMITTALS

A. Include on ductwork and piping shop drawings a layout of masonry and concrete floor and wall sleeve locations for pipes and ducts. Include elevations and sleeve sizes.

B. Submit product data on through-penetration firestop. Submittal data for firestopping systems shall include the UL System Numbers listed in the UL Building Materials Directory under which the material was tested in accordance with ASTM E814 (UL 1479) for use in a Through-Penetration Firestop System. Where there is a firestop application that has not been tested by UL, obtain from the manufacturer an engineered judgment that the proposed application of the firestop product is suitable. Submit the engineered judgment to the Authority Having Jurisdiction.
   1. Product Data: Manufacturer's specifications and technical data including detailed specification of construction and fabrication, manufacturer's installation instructions and details of each proposed assembly identifying intended products and applicable UL system number or UL classified devices.
   2. Shop Drawings: Indicate dimensions, description of materials and finishes, general construction, specific modifications, component connections, anchorage methods, hardware, and installation procedures, plus the following specific requirements:
      a. Manufacturer or manufacturer's representative shall provide qualified engineering judgments and drawings relating to non-standard applications as needed.

C. Submit details of hangers, anchors and supports for each pipe size and service, ductwork and individual pieces of equipment.

D. Submit joint sealer guarantee as described in sub-Clause 1.04, A.6.

E. Submit load calculations for multiple or trapeze pipe hangers as required in Clauses 2.02, B. and 3.01, S.

F. Submit ICBO Evaluation Reports as required in Clause 3.01, D.

G. Submit shop drawings indicating support methods, point loadings, etc. as described in Clause 3.01, E.

PART 2 - PRODUCTS

2.1 ACCEPTABLE MANUFACTURERS

A. Pipe Hangers: Anvil, Fee & Mason, Elcen, Tube-Turn, F&S, Pipe Shields, B-Line Kindorf, Michigan Hanger, Power Strut, Unistrut, or approved equal. Anvil figure numbers are listed below; equivalent material by specified manufacturers is acceptable.

B. Sleeves: Pipe Shields, Insul, RK Industries

C. Pipe Wrap Tape: Polycen, Nassua, 3M

D. Firestop: Nelson, Dow, 3M, Hilti

E. Escutcheon Plates: Beaton & Corbin Manufacturing

DocuSign Envelope ID: 330DEBD6-9A9E-4F34-BDCC-1AC1BAA701E9

2.2 GENERAL

A. Provide hangers of heavy construction suitable for the size of pipe to be supported. Materials shall be of steel, except pipe rolls of wrought or malleable iron.
   1. Hangers for pipes six-inches or less shall be swivel ring, wrought pipe clamp, or adjustable wrought clevis type. Anvil Figure 260, MSS-SP-69, Type 1.
   2. Hangers for ductile iron or cast iron pipes four-inches or less shall be swivel ring, wrought pipe clamp or adjustable wrought clevis type. Anvil Figure 590, MSS-SP-69, Type 1.
   3. When an oversized clevis type hanger is used (i.e., insulate pipe) a pipe spacer shall be placed over the clevis bolt as a spacer to assure that the lower U-strap will not move in on the bolt.

B. Multiple or trapeze pipe hangers shall be steel channels with welded spacers and hanger rods if hanger load calculations are submitted.

C. Wall support shall be welded steel bracket with hanger.
   Light Duty Wall Support: Anvil Figure 194, MSS-SP-69, Type 31.
   Medium Duty Wall Support: Anvil Figure 195, MSS-SP-69, Type 32.
   Heavy Duty Wall Support: Anvil Figure 199, MSS-SP-69, Type 33.

D. Metal Framing Channels:
   1. Provide perforated epoxy painted finish, 12-gauge minimum steel channels securely anchored to wall structure with interlocking, split type, bolt-secured, galvanized pipe/tubing clamps. B-Line type B22, S pattern with B-2000 series clamps, Power-Strut Type PS200 H with PS 1200 clamps or equal.
   2. When copper piping is being supported, provide flexible elastomeric/thermoplastic isolation cushion material to completely encircle the piping and avoid contact with the channel or clamp, equal to B-Line B1999 Vibra Cushion, or provide manufacturers clamp and cushion assemblies, B-Line BVT series, Power-Strut PS 004T – PS 106N Series or equal.

E. Support stationary vertical piping with carbon steel double bolt riser clamps attached to the pipe. Weld shear lugs to the pipe. In general, use one clamp for each two floors and one clamp at each floor for copper tubing. Where pipes are in open shafts, provide forged steel bar brackets fixed to wall. Riser clamps shall be copper plated when used with copper pipe. Locate riser clamp immediately under coupling or other fitting. Anvil Figure 261, MSS-SP-69, Type 8 for steel pipe; Anvil Figure CT121, MSS-SP-69, Type 8 for copper pipe.

F. Floor Support for Pipe:
   1. Sizes up to 4 inches: Cast iron adjustable pipe saddle, locknut nipple, floor flange, and concrete pier or steel support. Anvil Figure 264, MSS-SP-69, Type 38.
   2. Provide pipe stanchions for support of pipe elbows at base of riser and vertical piping. Stanchions shall be complete with base plate and vent hole. Anvil Figures 62 and 63.

G. Select hangers and supports in accordance with the manufacturer's recommended maximum loading. Hangers shall have a safety factor of 5 of 1.

H. Hangers shall not be disengaged by movement of supported pipe.

I. Provide copper-plated or felt-lined hangers for copper piping or provide 10-mil pipe wrap tape on pipe at hangers. Tape shall extend a minimum of 2 inches beyond hanger saddle on both ends and be wrapped around pipe a minimum of 2 turns. Install vinyl-coated hangers for all plastic piping.

J. Steel hanger rods shall be threaded both ends, threaded one end, or continuous threaded, black finish. Provide rods complete with adjusting and lock nuts. Anvil Figures 146, 140 or 253.

K. Pipe Support Recommendations for Rigid Grooved Joint Systems: The maximum hanger spacing in the specification to ANSI/ASME B31.1 as noted and should be used only in conjunction with Victaulic 07 zero-flex rigid couplings. For flexible systems the hanger, support, spacing and location refer to the pipe support recommendations section in the Victaulic "Field Assembly and Installation Pocket Handbook" or equivalent provided by Grooved Joint Manufacturer.

DocuSign Envelope ID: 330DEBD6-9A9E-4F34-BDCC-1AC1BAA701E9

L. Beam Clamps:
   1. Provide MSS SP-69 Type 23 malleable black iron clamp for attachment to beam flange up to 0.62 inches thick for single threaded rods of ⅜-, ½-, and ⅝-inch diameter, for use with pipe sizes 4-inch and less. Furnish with a hardened steel cup point set screw. Anvil Figure 86.
   2. Provide MSS SP-69 Type 28 or Type 29 forged steel jaw type clamp with a tie rod to lock clamp in place, suitable for rod sizes up to 1.5-inch diameter but limited in application to pipe sizes 8-inch and less without prior approval. Anvil Figure 228.

M. Continuous Concrete Insert Channels:
   1. Provide steel inserts with industry standard pre-galvanized finish, nominally 1⅝-inch wide by 1⅜-inch deep by length to suit the application, designed to be nailed to concrete forms and provide a linear slot for attaching other support devices.
   2. Installed channels shall provide a load rating of 2000 pounds per foot in concrete. Manufacturer's standard brackets, inserts, and accessories designed for use with continuous concrete inserts are acceptable.
   3. Select insert length to accommodate all pipe, duct, and conduit in the area.

N. Anchors shall be fabricated using welding steel shapes, plates, and bars to secure piping to the structure.

O. Concrete inserts shall be MSS SP-69 Type 18 wedge type or universal concrete inserts.
   1. Wedge type shall be constructed of a black carbon steel body with a removable malleable iron nut that accepts threaded rod to ⅞-inch diameter. Wedge design shall allow the insert to be held by concrete in compression to maximize the load carrying capacity. Anvil Figure 281.
   2. Universal type shall be constructed of black malleable iron body with a removable malleable iron nut that accepts threaded rod to ⅞-inch diameter. Anvil Figure 282.
   3. Use drilled steel shell with plug type inserts when the inserts are placed after the concrete is poured.

P. Drainage Piping: Provide MSS-SP-69 Type 8 or MSS-SP-69 Type 42 riser clamps for vertical piping, and MSS-SP-69 Type 52, spring hangers at the base of vertical piping.

2.3 SLEEVES

A. Construct sleeves for pipes passing through walls (other than foundation walls), floors, partitions, hung or furred ceilings, etc., of minimum 18-gauge galvanized steel, flanged on each side of wall, partition, hung or furred ceiling, etc.

B. Provide standard weight galvanized steel pipe sleeves with welded anchor flanges at foundation walls and reinforced concrete or masonry walls.

C. Provide 20-gauge galvanized sheet metal sleeves, the full depth of floor or wall, for round ductwork passing through masonry or concrete and/or steel cellular floor construction. Rectangular ductwork shall be provided with framed openings through floor and wall construction.

D. Provide cast iron or fabricated “wall pipe” equivalent to ductile-iron pressure pipe, with plain ends and integral waterstop, unless otherwise indicated.

E. Stack Sleeve Fittings: Provide manufactured, cast-iron sleeve with integral clamping flange. Include clamping ring, bolts, and nuts for membrane flashing and underdeck clamping ring with setscrews.

F. Provide mechanical sleeve seals at exterior wall and tank wall penetrations. Seal shall be of the modular sealing element unit type, designed for field assembly, to fill annular space between pipe and sleeve.
   1. Sealing Elements: EPDM interlocking links shaped to fit surface of pipe. Include type and number required for pipe material and size of pipe.
   2. Pressure Plates: Plastic. Include two for each sealing element.
   3. Connecting Bolts and Nuts: Carbon steel with corrosion-resistant coating of length required to secure pressure plates to sealing elements. Include one for each sealing element.

G. Install escutcheons at exposed piping through floors, ceilings, walls and partitions in finished areas, within cabinets and millwork, and piping through all fire-rated separations. Provide

DocuSign Envelope ID: 330DEBD6-9A9E-4F34-BDCC-1AC1BAA701E9

manufactured wall and ceiling escutcheons and floor plates, with an inside diameter to closely fit around pipe, tube, and insulation of insulated piping and an outside diameter that completely covers opening. Escutcheons shall be cast iron or cast brass, deep-pattern escutcheons if required to conceal protruding fittings, sleeve hubs or firestopping projections.

2.4 PENETRATION FIRESTOP

A. Fire-Rated Construction: Maintain barrier and structural floor fire resistance ratings including resistance to cold smoke at all penetrations, connections with other surfaces or types of construction, and sound or vibration absorption, and at other construction gaps.

B. Smoke Barrier Construction: Maintain barrier and structural floor resistance to cold smoke at all penetrations, connections with other surfaces and types of construction and at all separations required to permit building movement and sound or vibration absorption, and at other construction gaps.

C. Systems or devices listed in the UL Fire Resistance Directory under categories XHCR and XHEZ may be used, providing that it conforms to the construction type, penetrant type, annular space requirements and fire rating involved in each separate instance, and that the system be symmetrical for wall applications. Systems or devices must be asbestos-free. Mortar systems must be Warnock Hersey approved.

D. Withstand the passage of cold smoke either as an inherent property of the system, or by the use of a separate product included as a part of the UL system or device, and designed to perform this function.

E. All firestopping products must be from a single manufacturer.

F. Through-penetration smokestopping at smoke partitions: Any system complying with the requirements for through-penetration firestopping in fire-rated construction, as specified, is acceptable, provided that the system includes the specified smoke seal or will provide a smoke seal. The length of time of the fire resistance may be disregarded in a non-fire rated smoke barrier.

G. Seal all pipe and duct penetrations through fire-rated construction with factory-built devices or with manufactured fill, void, or cavity materials “Classified” by Underwriters Laboratories Inc. for use as a Through-Penetration Firestop. All firestop devices and systems shall be approved for such use by the Authority Having Jurisdiction. The firesafing system used shall maintain the fire-resistance rating of the building component that is penetrated.

H. All materials shall be non-hardening and non-toxic. The firesafing system used shall accommodate expansion and contraction of the floating mechanical piping systems without damaging the firestop or reducing its effectiveness as a smoke barrier or water seal.

2.5 GROUT

A. Grout shall be slow-hardening after application, volume-adjusting, non-staining, non-corrosive, non-gaseous, and recommended for interior and exterior applications.

B. Provide ASTM C1107/C1107M, Grade B, non-shrink and non-metallic, dry hydraulic-cement grout.

C. Design Mix: 5000 psi, 28-day compressive strength from a premixed and factory pre-package.

PART 3 - EXECUTION

3.1 HANGERS AND SUPPORTS

A. Deflection of pipes shall not exceed 1/240th (0.416 percent) of span. Support horizontal piping in accordance with the following schedule:

DocuSign Envelope ID: 330DEBD6-9A9E-4F34-BDCC-1AC1BAA701E9

Pipe Size (inches)	Maximum Hanger Spacing (feet)			Hanger Rod Diameter (inches)		
	Steel	Cast Iron	Copper	Steel / Cast Iron	Copper	Plastic
up to 1	7	–	5	⅜	⅜	⅜
1.25	9	–	7	⅜	⅜	⅜
1.5 & 2	9	5	8	⅜	⅜	⅜
2.5	12	5	9	0.5	0.5	0.5
3	12	5	10	0.5	0.5	0.5

B. Provide hangers at each change in direction and both sides of valves 4-inch and larger. Place a hanger within 12 inches of each horizontal elbow, valve, strainer, or similar piping specialty item. Provide hanger on both sides of “no-hub” mechanical joints.

C. Support hangers from concrete inserts or beam clamps. Furnish, locate and set inserts. Construct inserts of malleable iron or pressed steel with space for rods of all sizes. Install inserts for pipes 3 inches and larger in size with a reinforcing rod ⅝-inch in diameter run through a slot in the insert specifically provided for this purpose.

D. If piping is required in a space where no inserts have been provided, drill holes in the slab (subject to Structural Engineer’s prior approval) and provide rods and hanger attached to an approved fishplate or install double expansion shields connected by a 2-inch by 2-inch angle, from which the hanger rod is to be suspended. For pipe size 2 inches and under use single shields but the hanger spacing shall be reduced to 5 feet. The carrying capacity and size of each shield shall be calculated on the basis of the spacing indicated above but the minimum size shall be ⅜-inch. Install additional shields of the same size so that the number of hangers is of adequate size to support the loads, which they carry. Shields may be used in concrete slabs only. Obtain from the expansion shield manufacturer an ICBO Evaluation Report for the product and submit to the Architect.

E. Regardless of the type of construction (i.e., concrete, concrete-deck-steel or other variations) take particular care to support main lines and large and heavy pipes in an approved manner, including the provision of supplementary steel, if required. Supplementary steel shall be mill-rolled sections. Submit shop drawings, indicating support methods, point loadings to the building structure and hanger locations for review sufficiently in advance of concrete pouring schedules to permit evaluation, critique and any necessary changes to handling and support methods.

F. Hangers shall be directly bolted to steel beams of building construction, where they occur if approved by the Structural Engineer. Smaller pipes shall be suspended from crosspieces of pipe or steel angles, which in turn, are securely fastened to building beams or hung from building concrete construction by means of rods and inserts. The intention is to provide supports which shall be amply strong and rigid for the load, but which will not weaken or unduly stress the building construction.

G. Attachments to existing steel deck shall be limited to loads of 500 pounds. Heavier loads shall be supported by supplementary structural steel connected to structural beams. Provide all required supplementary steel.
   1. Attachments with loads up to 500 pounds shall be accomplished by drilled-in expansion shield type anchors located on the centerline of the concrete-filled ribs.
   2. 500-pound load attachments shall be spaced not less than 60 inches apart, and shall be located as close to steel beams as possible.

H. Provide approved roller support, floor stands, wall brackets, etc., for lines running near the floor or near walls, which can be properly supported or suspended by the floors or walls. Pipelines near walls may also be hung by hangers carried from approved wall brackets at a higher level than the pipe.

DocuSign Envelope ID: 330DEBD6-9A9E-4F34-BDCC-1AC1BAA701E9

I. Do not hang piping or ductwork from supports for other services. Installed supports shall accommodate free expansion of the piping and duct system.

J. Wherever hangers using pipe rolls are used, provide approved steel pipe covering protection saddles, spot-welded to the piping at each hanger location.

K. Anchor piping where shown to localize expansion or to prevent undue strain on piping and branches. Anchors shall be entirely separate from hangers and of heavy forged or welded construction of approved design. All anchor designs, when submitted for approval, shall include piping reactions which respective anchors are capable of supporting.

L. Install anchors at ends of principal pipe runs and at intermediate points in pipe runs between expansion loops. Make provisions for preset of anchors as required to accommodate both expansion and contraction of piping.

M. Support copper tubing individually by approved hangers not more than 6 feet apart. Hangers for uncovered lines shall be specially designed for copper tubing and of exact outside diameter of tubing. Hangers for covered tubing shall be broad straps fitting outside of covering.

N. Hangers for insulated piping shall support the pipe without piercing the insulation. Refer to Section 99-230700 – HVAC Insulation for insulation protection shields and pipe inserts.

O. Use hangers, which are vertically adjustable 1.5-inch minimum after piping is erected. Install hangers so that ½-inch minimum clearance is maintained between finished covering of pipe and adjacent work.

P. Support riser piping independently of connected horizontal piping.

Q. Adjust hangers to obtain pipe slope where specified.

R. Where piping can be conveniently grouped to allow the use of trapeze type supports, use standard structural shapes or continuous insert channels for the supporting steel. Where continuous insert channels are used, pipe supporting devices made specifically for use with the channels may be substituted for the specified supporting devices provided that similar types are used and all data is submitted for prior review.

S. Perform all welding in accordance with standards of the American Welding Society. Clean surfaces of loose scale, rust, paint or other foreign matter and properly align before welding. Use wire brush on welds after welding. Welds shall show uniform section, smoothness of weld metal and freedom from porosity and clinkers. Where necessary to achieve smooth connections, joints shall be dressed smooth.

T. Factory coat supports and anchors used in corrosive atmospheres with hot dip galvanizing after fabrication, ASTM A123/A123M, 1.5-ounces/square foot of surface, each side. Mechanical galvanize threaded products, ASTM B695 Class 150, 2.0 mil coating. Field cuts and damaged finishes shall be field-covered with zinc-rich paint of comparable thickness to factory coating. Corrosive atmospheres include the following locations:
   1. Exterior locations
   2. Chemical storage or hazardous waste storage rooms
   3. Sanitary and storm sewer pumping stations
   4. Locker/shower rooms

3.2 SLEEVES

A. Provide sleeves for pipe passing through floors, walls or partitions, hung or furred ceilings, of sufficient diameter to accommodate pipe covering where such is required. Locate sleeves secure in place so that an equal space is around the pipe, after the pipe is installed.

B. For sleeves at penetrations of metal deck, nail, screw or weld to the deck prior to the pouring of the deck concrete. Set sleeves in such a manner so that no concrete fills their interior during the concrete pouring and finishing operations.

C. For exposed pipes, caulk floor sleeves with firestop material watertight and project sleeve approximately 2 inches above the finished floor. Finish sleeves with specified flanges flush with the bottom of slab and also with the finished faces of wall.

DocuSign Envelope ID: 330DEBD6-9A9E-4F34-BDCC-1AC1BAA701E9

D. Provide sleeves with an inside diameter at least ½-inch greater than outside of pipe served, including pipe insulation which must be continuous through sleeve.

E. Where piping penetrates walls (other than foundation walls), partitions, floor slabs, etc., pack space between piping and sleeve with mineral wool (for depth of sleeve), or firestop material.

F. Do not support pipes by resting clamps on sleeves. Clamps shall extend beyond sleeve and be supported outboard of sleeve in an approved manner. In no case shall sleeves be cut or slotted to accommodate pipe clamps.

G. Provide escutcheon plates of the proper size for piping in sleeves passing through floors, walls, soffits, furrings, partitions, hung ceilings, etc., throughout the building where exposed. Exposed escutcheons shall be cast brass chromium plated, bell type, with setscrews of sufficient diameter to include any required pipe insulation. Attach escutcheon to building material, not to pipe. Do not penetrate vapor barriers.
   1. Split-casting, deep-pattern type cast-brass type with concealed hinge and set screw with polished chrome-plated and rough brass finish.
   2. Split-casting, floor-plate type cast brass with concealed hinge and set screw.

H. Exterior-wall pipe penetrations: Seal penetrations using sleeves and mechanical sleeve seals. Select sleeve size to allow for 1-inch annular clear space between pipe and sleeve for installing mechanical sleeve seals.
   1. Install aboveground steel pipe for sleeves smaller than 6 inches.
   2. Install aboveground cast-iron “wall pipes” for sleeves 6 inches and larger.
   3. Install underground cast-iron “wall pipes” for all sleeves.
   4. Mechanical Sleeve Seal Installation:
      a. Select type and number of sealing elements required for pipe material and size.
      b. Position pipe in center of sleeve.
      c. Assemble mechanical sleeve seals and install in annular space between pipe and sleeve.
      d. Tighten bolts against pressure plates that cause sealing elements to expand and make watertight seal.
      e. For wall thickness up to 12 inches provide one mechanical sleeve seal at the interior side of sleeve, for wall thickness greater than 12 inches provide two mechanical sleeve seals, one at the interior side of sleeve and one at the exterior side of sleeve.

3.3 FIRESTOPPING

A. Where space for future ducts, pipes and conduits is required, provide sleeves and fill with lightweight concrete or firestop.

B. Provide firestopping and grouting around pipes and ducts penetrating concrete slabs, concrete walls and masonry walls with cement grout in the sleeved opening extending full depth through wall or floor slab. Provide sheet metal cover over the insulation before applying grout. Around pipes and ducts through fire rated gypsum board construction, pack the annular space between the wall sleeve and the insulation sheet metal cover with noncombustible approved firestop material and finish with 20-gauge sheet metal collar on ducts and escutcheons on pipe where duct or pipework is exposed. Attach escutcheons to wall.

C. Verify existing conditions and substrates before starting work. Correct unsatisfactory conditions before proceeding. Proceed with installation only after penetrations of the substrate and supporting brackets have been installed.

D. Environmental Requirements:
   1. Provide adequate ventilation if using solvent.
   2. Provide forced-air ventilation during installation if required by manufacturer.
   3. Keep flammable materials away from sparks or flame.
   4. Provide masking and drop cloths to prevent contamination of adjacent surfaces by firestopping materials.
   5. Comply with manufacturing recommendations for temperature and humidity conditions before, during and after installation of firestopping.

DocuSign Envelope ID: 330DEBD6-9A9E-4F34-BDCC-1AC1BAA701E9

E. Clean surfaces that will be in contact with penetration seal materials of dirt, grease, oil, loose materials, rust, or other substances that may affect proper fitting, adhesion, or the required fire resistance.

F. Install penetration seal materials in accordance with the UL Fire Resistance Directory or Mortars per Warnock Hersey approval and in accordance with manufacturer's instruction.

G. Seal holes or voids made by penetrations to ensure an effective smoke barrier.

H. Where large openings are created in walls or floors to permit installation of pipes, ducts or other items, close unused portions of opening with firestopping material tested for the application. See UL Fire Resistance Directory or Warnock Hersey approvals.

I. Install smokestopping as specified for firestopping.

3.4 GROUTING

A. Mix, install and cure grout for mechanical equipment base bearing surfaces, pump and other equipment base plates, and anchors.

B. Clean surfaces that will come into contact with grout. Provide forms as required for placement of grout. Avoid air entrapment during placement of grout.

C. Place grout, completely filling equipment bases.

D. Place grout on concrete bases and provide smooth bearing surface for equipment.

E. Place grout around anchors.

END OF SECTION

DocuSign Envelope ID: 330DEBD6-9A9E-4F34-BDCC-1AC1BAA701E9

SECTION 99-230548

VIBRATION AND SEISMIC CONTROLS FOR HVAC

PART 1 - GENERAL

1.1 WORK INCLUDED

A. The work of this Section shall include, but is not limited to, the following:
   1. Vibration isolation elements for Division 23 mechanical piping, ductwork and rotating equipment
   2. Equipment isolation bases
   3. Flexible connectors
   4. Seismic restraint and anchorage calculations
   5. Seismic restraints for isolated and non-isolated equipment, piping and ductwork
   6. Supervision and inspection of installed vibration isolators, seismic restraints, anchorage and associated hardware

1.2 RELATED DOCUMENTS

A. Section 99-230501 – HVAC General Provisions

B. Section 99-230529 – Hangers and Supports for HVAC

C. Division 26 – Electrical Specifications

1.3 REFERENCE STANDARDS

Published specifications standards, tests or recommended methods of trade, industry or governmental organizations apply to work in this Section where cited below:

A. ASCE – American Society of Civil Engineers
   1. ASCE 7-05, 2006 Revised 2007 – Minimum Design Loads for Buildings and Other Structures

B. Federal Specifications
   1. MIL-DTL-83420 (2005) – Wire Rope, Flexible, for Aircraft Control

C. IBC – International Building Code (2006)

D. CBC – California Building Code: Title 24 Building Standards

E. California Fire Code

1.4 QUALITY ASSURANCE

A. Provide control of excessive noise and vibration in the buildings due to the operation of machinery or equipment, and/or due to interconnected piping, ductwork or conduit. Install vibration isolation units and associated hangers and bases under the direct supervision of the vibration isolation manufacturer's engineer.
   1. Vibration isolators shall have either known undeflected heights or calibration markings so that after adjustment, when carrying their load, the deflection under load can be verified, thus determining that the load is within the proper range of the device and that the correct degree of vibration isolation is being provided according to the design.
   2. Isolators shall operate in the linear portion of their load versus deflection curve. Furnish load versus deflection curves that are linear over a deflection range of not less than 50 percent greater than the design deflection.
   3. The ratio of lateral to vertical stiffness shall be neither less than 0.9 nor greater than 1.5.
   4. The theoretical vertical natural frequency for each support point, based upon load per isolator and isolator stiffness shall not differ from the design objectives for the equipment as a whole by more than plus or minus 10 percent.
   5. All neoprene mountings and components shall be oil resistant and have:
      a. Shore durometer hardness of 40 to 65, after minimum aging of 20 days or corresponding oven-aging

DocuSign Envelope ID: 330DEBD6-9A9E-4F34-BDCC-1AC1BAA701E9

b. Minimum tensile strength of 2,000 pounds per square inch
c. Minimum elongation of 300 percent
d. Maximum compression set at 25 percent

B. Mounting systems or components shall not be resonant with any of the supported equipment forcing frequencies.

C. Isolators shall be selected on the basis of the static and dynamic loads actually supported. Dynamic loads include those due to: wind, fluid flow, thrust and rotational inertia. Select each isolator independently for proper load distribution on each piece of equipment, duct and pipe support, or base.

D. Vibration isolation hardware shall not be concealed until reviewed by the Architect.

E. Verify specified clearances, plumb installation of hanger rods and lack of interference – no contact permitted with gypsum board, framing, ceiling wires, light fixtures, conduit, ducts and piping.

F. Verify that the space below inertia bases is clean and clear of construction debris and obstructions.

G. Verify proper vibration isolator loading and deflection.

H. Vibration isolation field inspection engineer shall provide a punchlist report for the Architect's review.

I. Vibration isolation and seismic restraint field inspection engineer shall submit a close-out letter stating that the installation is complete and meets the requirements of the specification and the manufacturer's installation instructions, and all deficiencies noted have been corrected.

J. Cooperate with Owner's Special Inspector.

1.5 SUBMITTALS

A. Manufacturer's Data:
1. Catalog cuts and data sheets on specific vibration isolators to be utilized showing compliance with the specifications.
2. An itemized list showing the items of equipment and piping to be isolated, the isolator type and model number selected, isolator loading and deflection, and reference to specific drawings.
3. Written approval of the base design shall be obtained from the equipment manufacturer.

B. Shop Drawings: Concrete reinforcing details and templates for all foundations, bases, supports, inertia blocks, hanger bolts, etc.; support frame details, pipe support details; vibration isolation mountings for equipment and piping including equipment weight, center of gravity and operating speed, location and installation details. Include in the vibration isolation equipment submittal drawing the following information based on equipment submittals released for construction:
1. Isolation mounting deflections.
2. Spring diameters, compressed spring heights at rated load and solid spring heights where steel spring isolation mountings are used.
3. Equipment operating speed.
4. Seismic restraint calculations stamped by a California State licensed structural or civil engineer, confirming compliance with ASCE 7-05.
5. Product data and calculations to demonstrate compliance with the requirements of regulatory agencies.
6. Note compliance with seismic code regulations and the project specification on the submittals.
7. Number and location of seismic restraints and anchors for each piece of equipment including but not limited to bolted or welded connections between cooling tower and support beams, vertical pipe risers, bolt sizing and embedment depth, and seismic cable strength and diameters.
8. Drawings showing methods of isolation of pipes and ductwork piercing walls and floor slabs.
9. Provide installation instructions, drawings and field supervision to assure proper installation and performance.

DocuSign Envelope ID: 330DEBD6-9A9E-4F34-BDCC-1AC1BAA701E9

10. Certificate of compliance for each component mounting system and anchorage as required by CBC Section 1708.5.
11. Written statement of responsibility as required by CBC Section 1706.

C. Submit close-out letter and report as described in Clauses 1.04, I. and 3.05, A.

D. Submit seismic restraint calculations as described in Clause 2.04, A.

1.6 MANUFACTURER RESPONSIBILITIES

A. Manufacturer of vibration isolation equipment shall have the following responsibilities:
1. Certificate of compliance.
2. Determine vibration isolation and seismic restraint sizes and required locations.
3. Provide piping, ductwork and equipment isolation systems and seismic restraints as scheduled or specified.
4. Guarantee specified isolation system deflection.
5. Provide installation instructions, drawings and field supervision to assure proper installation and performance.
6. Seismic restraints and anchorage shall be designed for the lateral and vertical forces required by the Building Code for the specific project type and site. Confirm lateral and vertical forces and site-specific design criteria with the project Structural Engineer.
7. Written statement of responsibility for the seismic restraint system as required by CBC Section 1706.

1.7 DEFINITIONS

A. Life Safety Systems:
1. All components involved with fire protection including service water supply piping, water tanks, etc. Life safety system restraints shall be designed with an Importance Factor of 1.5.

B. Positive Attachment:
1. A positive attachment is defined as a cast-in anchor, a drill-in wedge anchor, a double-sided beam clamp loaded perpendicular to a beam, or a welded or bolted connection to structure. Single sided “C” type beam clamps for support rods of overhead piping, ductwork, components involved with fire protection or any other equipment are not acceptable as seismic anchor points.

1.8 SPECIAL INSPECTIONS

A. The Owner shall retain a Special Inspector to perform periodic inspections of the following systems:
1. Vibration isolation systems where the clearance between equipment support frame and seismic restraints is ¼ inch or less.
2. Piping and attached equipment containing flammable, combustible or highly toxic materials. Importance Factor 1.5.
3. Ductwork and attached equipment containing hazardous substances. Importance Factor 1.5.

PART 2 - PRODUCTS

2.1 ACCEPTABLE MANUFACTURERS

A. Vibration Isolation: Mason Industries (MII), Vibration Mountings & Control (VMC), Amber-Booth (AB), Vibration Eliminator (VEC), Vibrex Vibration Control Systems (VVC)

B. Piping Seismic Bracing: Kin-Line, Super Strut, Mason Industries

2.2 MATERIALS

A. All vibration isolation devices shall be the products of a single manufacturer.

B. Where exposed to the atmosphere, all steel shall be hot-dipped galvanized; hardware shall be cadmium plated; springs shall be powder coated.

DocuSign Envelope ID: 330DEBD6-9A9E-4F34-BDCC-1AC1BAA701E9

2.3 VIBRATION ISOLATORS

A. Refer to these specifications and drawings for vibration isolator types to be used:

1. Type “C1” pre-compressed spring hanger rod isolators shall incorporate the following:
   a. Spring element seated on a steel washer in series with a deflected neoprene element as specified.
   b. Steel retainer box encasing the spring and neoprene washer. Ensure no metal-to-metal contact.
   c. Minimum ½-inch clearance between retainer box and spring hanger rod. Provide neoprene grommet.
   d. Where operating weight differs from installed weight provide built-in adjustable limit stops to prevent equipment rising when weight is removed. Stops shall not be in contact during normal operation. Clearly indicate deflection with scale on isolator.
   e. Maximum 30-degree allowable rod misalignment from centerline axis.
      Type PC30N ..... MII
      Type SNCR ..... VEC
      Type RSH-30A ..... VMC
2. Type “E” elastomer hanger rod isolators shall incorporate the following:
   a. Molded unit type neoprene element as specified.
   b. Steel retainer box encasing neoprene mounting.
   c. Clearance between mounting hanger rod and steel retainer box. Provide neoprene grommet.
      Type HD ..... MII
      Type CD ..... VEC
      Type HSS ..... VMC
3. Type “G” pad type elastomer mountings shall incorporate the following:
   a. Neoprene impregnated canvas duck material.
   b. Maximum loading 1,000 pounds per square inch. Provide suitable bearing plate to distribute load.
   c. Minimum thickness, 2-inch.
      Type HL ..... MII
      Type Fabriflex ..... VMC

2.4 SEISMIC RESTRAINTS

A. General:

1. Provide restraints capable of safely accepting forces specified in PART 1 of this Section, without failure, to maintain equipment, piping, and ductwork in a captive position. Restraints must not short circuit vibration isolation systems or transmit objectionable vibration or noise. Submit calculations by a structural or civil engineer licensed and registered in the State of California to verify seismic restraint and cable capacities.
   a. Seismic Restraint, Type II: Cable type with approved end fastening devices (minimum of two per end) to equipment and structure. Cable to comply with Federal Specification MIL-DTL-83420 military grade 7 by 19 galvanized steel.
      Type SCBH ..... MII

PART 3 - EXECUTION

3.1 GENERAL

A. Install in accordance with manufacturer’s recommendations and written instructions. Vibration isolators must not cause any change of position of equipment or piping resulting in piping stresses or misalignment.

B. Isolate mechanical equipment from the building structure by means of vibration isolators as specified.

C. Vibration isolated piping and ductwork shall pass freely through walls and floors without rigid connections. Maintain ¾-inch to 1.25-inch concentric clearance around outside surfaces of piping or ductwork at penetration points. Pack this clearance space tightly with fiberglass, and caulk

DocuSign Envelope ID: 330DEBD6-9A9E-4F34-BDCC-1AC1BAA701E9

airtight after installation of piping or ductwork, or provide resilient firestopping as required. Provide supports 6 to 8 inches from walls or partitions on both sides of penetrations.

D. Do not make rigid connections between equipment and building structure that degrades or short circuits the vibration isolation system specified herein.

E. Loop electrical circuit connections to isolated equipment to allow free motion. Include at least one slack 90-degree bend.

F. Bring to the Architect's attention prior to installation any conflicts with other trades, which will result in unavoidable rigid contact with equipment or piping as, described herein, due to inadequate space or other unforeseen conditions. Corrective work necessitated by conflicts after installation will be at the Contractor's expense.

G. Level vibration isolated equipment under rated design operating conditions while maintaining the isolation criteria. Isolators shall be plumb and aligned during operation.

3.2 EQUIPMENT ISOLATORS

A. Mount vibration isolating devices and related inertia blocks on concrete housekeeping pads.

B. If the equipment to be mounted is not furnished with integral structural frames and external mounting lugs (both of suitable strength and rigidity), install approved structural sub-base in the field which will support the equipment to be hung and to which will be attached the hangers.

C. Additional Requirements:
   1. Provide brackets to accommodate the isolator. Manufacturer shall indicate bolt hole sizes and locations, welds required, and specify the vertical position and size of the bracket.
   2. Adjust the isolators after the entire installation is complete and under full operational load so that the load is transferred to the isolator.
   3. Verify that all insulated isolator and mounting systems permit equipment motion in all directions. Adjust or provide additional resilient restraints to flexibly limit equipment start-up lateral motion to ½-inch.
   4. Prior to start-up, verify that there are no isolation short circuits in the base or isolators.

3.3 PIPING ISOLATORS

A. Isolate piping as follows:
   1. Piping in mechanical rooms, fan rooms, plumbing equipment rooms or boiler rooms.
   2. Piping within 50 feet (or 100 diameters if greater) from connected rotating equipment and pressure-reducing stations.
   3. As additionally specified in the following clauses.

B. Install isolators with the isolator hanger box attached to, or hung as close as possible to, the structure. Provide outrigger supports where required for clearance to equipment and to maintain minimum clearance of equipment to structure above.

C. Suspend isolators from substantial structural members, not from slab unless specifically permitted. Attachments to fireproofed structural members shall be re-fireproofed as required.

D. Align hanger rods to clear the hanger box. Replace bent rods.

E. Support pipe for the first three pipe hangers from any rotating equipment with isolator Type "C1" with a minimum 1.5-inch static deflection.

F. Support horizontal pipe 2 inches and smaller by means of Type "E" isolator with a minimum of 0.25-inch deflation.

G. Domestic water and HVAC piping, one-inch diameter and less, shall be isolated using Acousto-Plumb or equal resilient attachments or shall be provided with thermal insulation with shields at support points.

H. Mount all isolators between building structure and supplementary steel.

I. Suspend isolators from rigid and massive support points.

J. Supplementary steel to be sized for a maximum deflection of 0.08 inches at center of span.

K. Vibration isolation components shall not be used to correct misaligned sections of pipe.

DocuSign Envelope ID: 330DEBD6-9A9E-4F34-BDCC-1AC1BAA701E9

L. Vertical piping subject to thermal expansion shall have pipe riser guides, anchors and supports located so that there will be no direct metal contact of the piping with the building structure.
   1. Weld steel guide bars to the pipe at a maximum spacing of 60 feet. The outside diameter of the opposing guide bars shall be smaller than the inside diameter of the pipe riser clamp in accordance with standard field construction practice. Each end of the pipe riser clamp shall be rigidly attached to an all-directional pipe anchor isolation mounting, which in turn shall be rigidly fastened to the supplementary steel framing within the shaft.
   2. The all-directional pipe anchor shall consist of a telescoping arrangement of 2 sizes of steel tubing separated by a minimum of ½-inch thick heavy duty neoprene and canvas duck isolation pad. Provide vertical restraints by similar material arranged to prevent vertical travel in either direction. The allowable load on the isolation material shall not exceed 500 pounds per square inch. Anchors shall be Mason Industries Type ADA or equal.
   3. Construct piping guides for insulated piping with a 10-gauge metal sleeve around the piping. Provide the thermal insulation requirements for the piping between the piping and the sleeve. The metal sleeve outside diameter shall be smaller than the pipe riser clamp inside diameter. The pipe riser clamp shall be rigidly attached to the pipe guide, which shall be rigidly attached to the steel framing within the shaft. Guides shall be Mason Industries Type VSG or equal.
   4. The pipe anchor mountings shall be capable of safely supporting loads, expansion, and thrusts developed by the installed piping.

M. Provide flexible piping connections for connections to rotating equipment as specified and where shown on the Drawings.

N. Provide flexible piping connections and four-elbow offsets for all piping that crosses building seismic or expansion joints unless more stringent flexible all-directional joints have been specified elsewhere.

3.4 SEISMIC RESTRAINTS

A. General:
   1. Cable restraints shall be installed slightly slack to avoid short circuiting the isolated suspended equipment, piping or ductwork. Cable restraints shall be installed taut on non-isolated systems. Seismic solid brace restraints may be used in lieu of cables on non-isolated rigidly attached systems only.
   2. Where cable or solid brace restraints are located, the equipment, ductwork or piping support rods shall be angle braced for compression loads.
   3. At all locations where cable or solid brace restraints are attached to pipe clevises, the clevis cross bolt shall be reinforced with cross braces or a pipe spacer placed over the clevis bolt.
   4. Provide drill-in concrete anchors for ceiling and wall installation and female wedge type for floor-mounted equipment.

B. Seismic Restraint of Piping:
   1. Transverse piping restraints shall be at 40-foot maximum spacing for all pipe sizes, except where lesser spacing is required to limit anchorage loads.
   2. Longitudinal restraints shall be at 80-foot maximum spacing for all pipe sizes, except where lesser spacing is required to limit anchorage loads.
   3. Where thermal expansion is a consideration, guides and anchors may be used as transverse and longitudinal restraints provided they have a capacity equal to or greater than the restraint loads in addition to the loads induced by expansion or contraction.
   4. Cast iron and PVC piping transverse restraints must be at 20-foot maximum and longitudinal restraints at 40-foot maximum spacing.
   5. Transverse restraint for one pipe section may also act as a longitudinal restraint for a pipe section of the same size connected perpendicular to it if the restraint is installed within a specified distance (based on engineered data) of the elbow or tee or combined stresses are within allowable limits at longer distances.
   6. Hold-down clamps must be used to attach pipe to all trapeze members before applying restraints in a manner similar to clevis supports.
   7. Branch lines may not be used to restrain main lines.

DocuSign Envelope ID: 330DEBD6-9A9E-4F34-BDCC-1AC1BAA701E9

C. Seismic Restraint of Ductwork:
   1. Transverse restraints shall occur at 30-foot intervals or at both ends of the duct run if less than the specified interval. Transverse restraints shall be installed at each duct turn and at each end of a duct run.
   2. Longitudinal restraints shall occur at 60-foot intervals with at least one restraint per duct run. Transverse restraints for one duct section may also act as a longitudinal restraint for a duct section connected perpendicular to it if the restraints are installed within 4 feet of the intersection of the ducts and if the restraints are sized for the larger duct. Duct joints shall conform to SMACNA duct construction standards.
   3. The ductwork must be reinforced at the restraint locations. Reinforcement shall consist of an additional angle on top of the ductwork that is attached to the support hanger rods. Ductwork is to be attached to both upper angle and lower trapeze.
   4. A group of ducts may be combined in a larger frame so that the combined weights and dimensions of the ducts are less than or equal to the maximum weight and dimensions of the duct for which bracing details are selected.
   5. Walls, including gypsum board non-bearing partitions, which have ducts running through them, may replace a typical transverse brace. Provide channel framing around ducts and solid blocking between the duct and frame.

D. Seismic Restraint of Equipment:
   1. All mechanical equipment shall be vibration isolated and seismically restrained as scheduled using either inherently restrained vibration isolators or separate all-directional seismic snubbers as specified. Suspended equipment shall be restrained by cable restraints.

E. Seismic Restraint Exclusions (Flexible connectors are required between pipe or duct and equipment):
   1. Piping:
      a. For Ip = 1.5 projects or systems, all piping 1-inch nominal diameter and smaller, except cast iron and PVC piping, regardless of size.
      b. For Ip = 1.0 projects, all steel and copper piping 3-inch diameter and smaller, except cast iron and PVC piping, regardless of size.
      c. All piping suspended by individual hangers 12 inches or less as measured from the top of the pipe to the bottom of the support where the hanger is attached provided the hanger rod connection to the structure will not develop a moment. However, if the 12-inch limit is exceeded by any hanger in the run, seismic bracing is required for the run.
      d. The 12-inch exemption applies for trapeze supported systems if the top of each item supported by the trapeze qualifies.
   2. Ductwork (for Importance Factor 1.0):
      a. Rectangular and Square Ducts that are less than 6 square feet in cross-sectional area.
      b. Oval ducts that are less than 6 square feet in cross-sectional area based on nominal size.
      c. Round duct less than 34 inches in diameter.
      d. All duct suspended by hangers 12 inches or less in length as measured from the top of the duct to the point of attachment to the structure. Hangers must be attached within 2 inches of the top of the duct with a minimum of two #10 sheet metal screws. If the 12-inch limit is exceeded by any hanger in the run, seismic bracing is required for the run.

3.5 INSPECTION

A. On completion of installation of all vibration isolation devices specified herein, the local representative of the isolation manufacturer, the manufacturer's engineer shall inspect the completed system and submit a report to the Architect indicating the adequacy of the installation and listing any corrective action required.

B. Replace any component found to be visibly deflected with more substantial components.

DocuSign Envelope ID: 330DEBD6-9A9E-4F34-BDCC-1AC1BAA701E9

C. Unless otherwise scheduled on the Drawings provide the following Equipment Vibration Isolation and Seismic Restraints:

Equipment	Deflection (Inches)	Isolator Type	Restraint Type
Suspended fans	1.0	"C1"	II
Fan coil units	0.35	"E"	II
Wall-mounted fans and exhaust fans less than ¼ hp	0.15	"G"	–

D. Review Special Inspections reports prepared by the Owner's Agent and make corrections to deficiencies as noted. Provide written response to deficiency and document corrective actions.

END OF SECTION

DocuSign Envelope ID: 330DEBD6-9A9E-4F34-BDCC-1AC1BAA701E9

SECTION 99-230553

SYSTEMS IDENTIFICATION FOR HVAC

PART 1 - GENERAL

1.1 WORK INCLUDED

A. The work of this Section shall include, but is not limited to, the following:
   1. Valves, automatic control valves, dampers (including smoke and combination fire/smoke dampers) and automatic control dampers identification
   2. Equipment identification
   3. Piping and ductwork identification
   4. Signage

1.2 RELATED DOCUMENTS

A. Section 99-230501 – HVAC General Provisions

1.3 REFERENCE STANDARDS

A. ASME – American Society of Mechanical Engineers
   1. ASME A13.1 – 2007: Scheme for the Identification of Piping Systems

B. ASTM – American Society for Testing and Materials
   1. ASTM D709 – 2007: Standard Specification for Laminated Thermosetting Materials

1.4 QUALITY ASSURANCE

A. Piping identification shall comply with ASME Standard A13.1.

1.5 SUBMITTALS

A. Submit the following:
   1. Damper identification chart (including smoke and combination fire/smoke dampers)
   2. Lists of pipe and equipment to be labeled
   3. Color chart

B. Product Data: Manufacturer's latest published data for materials, equipment and installation, including samples of valve and damper tags, equipment identification and piping identification.

C. Maintenance Manuals: Provide valve and damper tag schedules for inclusion in maintenance manuals.

PART 2 - PRODUCTS

2.1 ACCEPTABLE MANUFACTURERS

A. Brady/Seton

B. Stranco

C. Kolbi

2.2 VALVE AND DAMPER IDENTIFICATION

A. All tagged components shall be in accordance with ASME A13.1.

B. For valves, smoke and combination fire/smoke dampers and automatic control dampers, use metal tags 2-inch minimum diameter, fabricated of 19-gauge polished brass, stainless steel or aluminum.
   1. Attach tags with jack chain "S"-hook or split ring of same materials.
   2. Provide engraved/stamped tags with black ink-filled ¼-inch high letters and ½-inch high numbers.
   3. Provide $^{5}/_{32}$-inch hole for fastener.

DocuSign Envelope ID: 330DEBD6-9A9E-4F34-BDCC-1AC1BAA701E9

2.3 PIPE IDENTIFICATION

A. Pipe markers shall have 1.25-inch high letters and integral directional flow arrows. Smaller letters may be used only when space does not permit 1.25-inch high lettering.

B. For piping up to 5-inch diameter, use pre-formed snap-on markers.

C. Material: Semi-rigid colored vinyl; 15 gauge up to 1-inch pipe, 30 gauge for all other pipe sizes.

D. Seton “Setmark” or equal.

E. Pressure-sensitive tapes are unacceptable.

2.4 EQUIPMENT IDENTIFICATION

A. Mechanical equipment shall be identified by means of nameplates permanently screw-fastened to the equipment. Nameplates shall be black surface, white core laminated bakelite with engraved letters. Plates shall be a minimum of 3-inch long by 1-inch wide with white letters ⅜-inch high.

B. Identification of Automatic Controls: ¼-inch high lettering and laminated plastic plates screwed or chained to equipment.

C. Equipment installed in ceiling spaces shall have identifying number stenciled on bottom of unit so that it is visible from below.

2.5 SIGNAGE

A. Provide engraving stock melamine plastic laminate, complying with ASTM A709, in sizes and thicknesses indicated, engraved with engraver's standard letter style of sizes and wording indicated, black with white core (letter color) except as otherwise indicated, punched for mechanical fastening except where adhesive mounting is necessary because of substrate.

1. Thickness: $^{1}/_{16}$-inch for signs up to 20 square inches or 8-inch length; ⅛-inch for larger signs.
2. Fasteners: Self-tapping stainless steel screws, except contact type permanent adhesive where screws cannot or should not penetrate substrate.

PART 3 - EXECUTION

3.1 EQUIPMENT IDENTIFICATION

A. Identify equipment with identical letter and/or number as used on the Drawings. Where space is available, use full name of equipment. Attach nameplates in a permanent manner in a location that will be clearly visible after installation is complete.

3.2 PIPING IDENTIFICATION

A. Piping identification shall be in conformance with the ASME A13.1.

B. Identify piping systems with color-coded bands, sharply contrasting with background. Locate bands near strategic points, such as valves, items of equipment, changes in direction, wall penetrations, capped stub-out for future connection and every 40 feet of straight runs. If necessary, paint a strip background of black or white to obtain contrast.

C. Apply bands where they can be easily read. Provide bands with backgrounds of different colors.

D. Drain piping serving mechanical equipment items for which the drain discharge is not visible from the equipment shall be marked near the point of discharge indicating the item of equipment served.

3.3 ACCESS IDENTIFICATION

A. Identify service, damper, duct access door, piping and equipment behind all architectural access doors.

B. Removable ceiling tile shall be marked by small color markings at corner of tile or door in accordance with the following color assignments:

HVAC Heating	–	Yellow
HVAC (other)	–	Blue

DocuSign Envelope ID: 330DEBD6-9A9E-4F34-BDCC-1AC1BAA701E9

3.4 INSTALLATION OF IDENTIFICATION

A. Where identification is to be applied to surfaces which require insulation, painting or other covering or finish, including valve tags in finished mechanical spaces, install identification after completion of covering and painting. Install identification prior to installation of acoustical ceilings and similar removable concealment.

END OF SECTION

DocuSign Envelope ID: 330DEBD6-9A9E-4F34-BDCC-1AC1BAA701E9

SECTION 99-230593

TESTING, ADJUSTING AND BALANCING FOR HVAC

PART 1 - GENERAL

1.1 WORK INCLUDED

A. The work of this Section shall include, but is not limited to, the following:
   1. Adjust and balance hydronic systems.
   2. Adjust and balance air systems.
   3. Perform acoustic measurements to systems.
   4. Perform airflow measurements for smoke control system zones and stair and vestibule pressurization tests.

1.2 RELATED DOCUMENTS

A. Section 99-221100 – Domestic Water Systems

B. Section 99-230501 – HVAC General Provisions

C. Section 99-233313 – Dampers

D. Section 99-233400 – HVAC Fans

E. Section 99-233700 – Air Outlets and Inlets

F. Section 99-238119 – Variable Refrigerant Volume (VRV) System

1.3 REFERENCE STANDARDS

A. All work shall be in accordance with the Associated Air Balance Council Standards.

1.4 QUALITY ASSURANCE

A. Each Balancing Contractor providing a bid for this work shall submit the following information with the bid, or the bid shall not be accepted by the Owner:
   1. List previous projects of similar scope with dates that projects were executed.
   2. Outline organization of Contractor, including names of principals, years of operation, address, and phone number.
   3. List instruments owned by Contractor and procedures that will be used on this project.
   4. List name of job site supervisor that will execute this work and a résumé of individual's specific work experience.
   5. Provide a sample of a balance report on a project of similar scope.

B. The final balancing, testing, and adjustments of the complete mechanical systems shall be the direct responsibility of the Balancing Contractor, including all costs for doing this work and provision of the personnel, materials, tools, and instrumentation to accomplish this work. Meet standards contained in the AABC National Standard Chapter 17 through 26 and other criteria as set forth in these specifications.

C. The Contractor must primarily be engaged in the balancing and testing of heating, ventilating and air conditioning systems. The Contractor must be AABC certified.

1.5 SUBMITTALS

A. Three months prior to the start of the Test and Balance field activities, submit certification of most recent calibration of all instruments to be used on this project.

B. Submit project-specific agenda (outline) as described in Clause 1.06, B.

C. Submit sample forms as described in Clause 1.06, E.

D. Submit Balancing Report as described in Paragraph 3.04.

DocuSign Envelope ID: 330DEBD6-9A9E-4F34-BDCC-1AC1BAA701E9

1.6 PROCEDURES

A. General: Prior to commencement of balancing, review proposed schedule, methods and instruments to be used in balancing with the Architect. Include descriptive data, procedure data and sample forms.

B. Descriptive Data: Review Contract Documents, shop drawings released for construction, design concepts and general function of each system including associated equipment and operation cycles. Confirm listing of flow and terminal measurements to be performed; selection points for proposed sound measurements.

C. Procedure Data: Outline procedures for taking test measurements to establish compliance with requirements. Specify type of instruments to be used, method of instrument application (by sketch) and correction factors. Verify access to valves, dampers and equipment for test and balancing.

D. Sample Forms: Submit forms showing application of procedures to typical systems. Forms shall be of AABC format.

E. AABC test sheets required are as follows:
   1. Air Moving Equipment Test Sheet
   2. Exhaust Fan Test Sheet (Supply, Return, Relief Fans)
   3. Air Inlet and Outlet Test Sheet
   4. Water Balance Element Test Sheet
   5. Circulating Water Pump Data Sheet
   6. Duct Traverse Zone Totals Sheet
   7. Duct Traverse Readings Sheet

1.7 CONTRACTOR COOPERATION

A. The Balancing Contractor shall check and report defects or deficiencies that may affect balancing.
   1. Mechanical Contractor shall cooperate with the Balancing Contractor to:
      a. Provide sufficient time before final completion date and individual equipment manufacturer's start-up so that balancing can be accomplished.
      b. Provide immediate materials, labor and tools to make corrections without delay.
      c. Place heating, ventilating and air-conditioning systems and equipment into full operation and continue the operation for each working day of testing and balancing.
      d. Advise Testing and Balancing Contractor of changes made to the system during construction.
      e. Install required test holes or wells complete with removable and replaceable plugs or caps.
      f. Make necessary revisions to controls, valves, dampers, and fan drives and consult with equipment manufacturers as required to achieve the specified system's performance.
      g. Supply and install dampers as specified and shown on the Drawings, and where required to obtain final system balance.
      h. Provide lifts, ladders, scaffolds, tools and labor to assist the work of the Balancing Contractor, including removing ceiling tiles, guards, adjusting pulleys, belts; replace when finished.
      i. Building Management System Contractor shall cooperate with and work with the Balancing Contractor when setting damper linkages, minimum outside air dampers, and other air volume devices, and shall be available for readjusting of dampers, devices or controls that are not properly calibrated.
      j. Set pressure-regulating and -reducing valves to operating and code conditions.
      k. Check and set relief and safety valves to code requirements.
      l. Clean strainers. Check air filters immediately prior to air balancing.
      m. Open fire dampers. Provide certification of damper operation as required by Section 99-233313 – Dampers.
      n. Verify return air openings have been provided in full height walls as specified, shown on the Drawings or as required for proper balancing and system operation.

DocuSign Envelope ID: 330DEBD6-9A9E-4F34-BDCC-1AC1BAA701E9

PART 2 - PRODUCTS

2.1 INSTRUMENTS

A. Instruments for testing and balancing of air and hydronic systems shall have been calibrated within a period of 6 months and verified for accuracy prior to start of work.

B. Submit a list of equipment, which will be used for the balancing of systems and test and calibration certification by an independent instrument calibration laboratory indicating date of test, and test results showing accuracy and repeatability are within limitations acceptable to the AABC.

PART 3 - EXECUTION

3.1 GENERAL PROCEDURE

A. Balance to maximum measured flow deviation from specified values of 10 percent at terminal device and 5 percent at equipment or mean sound-level deviation of 15 decibels.

B. Permanently mark settings on valves, splitters, dampers and other adjustment devices.

C. Take measurements to verify balance has not been disrupted or that such disruption has been rectified.

D. At final inspection, recheck random selections of data recorded in report. Recheck points or areas as selected and witnessed by the Architect.

E. At the completion of balancing procedures, allow for a minimum of 2 days for the Architect to witness test procedures and conduct operational tests.

3.2 SITE VISITS

A. A review of the installation shall be made prior to commencing balancing work and any additional dampers or valves required for proper balance shall be reviewed with the Architect and the Contractor.

B. The Test and Balance Contractor shall visit the job site a minimum of 3 times during the ductwork, equipment and piping installations. Site Visit Reports shall be submitted to the Architect listing any deficiencies found. Identify in the Report any additional balancing valves or dampers required.

3.3 ACCEPTANCE

A. Mechanical systems shall not be considered ready for final inspection until balancing results acceptable to the Architect are obtained.

B. If it is found that the specified airflows cannot be achieved on portions of the system, the actual conditions shall be reported to the Architect for consideration of corrective action before continuing the balance procedure.

C. If measured flow at final inspection shows deviation of 10 percent or more or mean sound-level deviation of 10 decibels or more from the certified report listings for more than 10 percent of selected areas, the Report shall be rejected.

D. If Report is rejected, systems shall be rebalanced and a new certified report submitted.

3.4 BALANCING REPORT

A. Submit a draft copy of reports prior to final acceptance of project. Provide copies of final report for inclusion in Operating and Maintenance Manuals.

B. Provide reports in durable soft cover, 3-ring binder manuals, complete with table of contents, indexing tabs and cover identification at front and side.

C. Include types, serial number and dates of calibration of instruments.

D. Record test data on a sepia made from the latest available revised set of mechanical shop drawings and submit copies upon completion of the Balancing Contract.

E. Install at each piece of mechanical equipment a “Data Register” showing significant operating temperatures, pressures, amperes, voltage, and brake horsepower. “Data Register” shall be

DocuSign Envelope ID: 330DEBD6-9A9E-4F34-BDCC-1AC1BAA701E9

enclosed in a hard, clear plastic holder securely attached to the equipment or to a wall in the adjacent area.

F. Submit with Report, fan and pump curves with operating conditions plotted. Submit grille and diffuser shop drawings and diffusion factors.

G. Report shall be indexed as follows:
   1. Air
      a. Summary
      b. Procedure
      c. Instrumentation
      d. Drawings
      e. Equipment Summary
      f. Fan Sheets
      g. Fan Curves
      h. Fan Profile Data
      i. Static Data
      j. Air Monitoring Station Data
      k. Traverse Data and Schedule
      l. Terminal Unit Summary
      m. Outlet Data Summary and Schematics (per system)
      n. Building Pressurization Data
      o. Smoke Exhaust Mode Data
      p. Stairway and Stair Vestibule Pressurization Data
      q. Smoke Control System Testing (Smoke Control Zone Supply, Relief and Exhaust Capacities)
   2. Fire Damper Certification
   3. Copy of Contractor's Certification

3.5 AIR SYSTEM PROCEDURE

A. Execute air systems balancing for each air system in accordance with AABC specifications and as described herein.

B. Make tests with supply, return and exhaust systems operating and doors, windows, closed or in their normal operation condition.

C. Test and adjust fan or blower speed to design requirements.

D. Test and record motor full load amps. Record each installed motor manufacturer and motor efficiency.

E. Traverse main supply air ducts, using a pitot tube and manometer. Calibrate the manometer to read two significant figures in velocity pressure ranges. Take a minimum of 16 readings per traverse. The intent of this operation is to measure by traverse the total air quantity supplied by the fan and to verify the distribution of air to zones. A "main duct" is defined as any of the following:
   1. A duct serving 5 or more outlets.
   2. A duct serving 3 or more branch ducts.
   3. A duct serving a hydronic coil.
   4. A zone duct from a fan-powered VAV terminal unit.
   5. A duct emanating from a fan discharge or plenum and terminating at one or more outlets.

F. Submit data in support of supply fans deliveries by the following four methods. For return, relief and exhaust fans, methods 1 and 4 are sufficient:
   1. By summation of the air quantity readings at inlets or outlets.
   2. By duct traverses of main supply ducts.
   3. By rotating vane traverse across the filter bank or coil bank.
   4. By plotting revolutions per minute and static pressure readings on the fan curve. Air density corrections must be indicated.

DocuSign Envelope ID: 330DEBD6-9A9E-4F34-BDCC-1AC1BAA701E9

G. Test and record required and measured system static pressures; filter differential, coil differential and fan total static pressure.

H. Test and adjust systems for design recirculated airflow rates.

I. Test and adjust system for design outside airflow rates.

J. Test and record entering and leaving air temperatures.

K. Install one-inch roll media filters upstream of air filters to impose 90 percent of the manufacturer's recommended final filter air pressure drop.

L. Adjust main supply and return ducts to proper design flow rates.

M. Inspect and confirm all fire dampers are open, all smoke dampers and fire/smoke dampers are in their correct position, all duct access doors are closed and fire damper fusible links are accessible.

N. Adjust zones to proper design, supply and return flow rates.

O. Test and adjust each air inlet and air outlet and transfer duct to within 10 percent of design requirements.

P. Identify each air inlet, air outlet, transfer duct and transfer wall opening as to location and area.

Q. Identify and list size, type and manufacturer of diffusers, grilles, registers and testing equipment. Use manufacturer's rating on equipment to make required calculations.

R. In readings and tests of diffusers, grilles and registers, report the required face and neck velocity, test face and neck velocity, and required air pressure drop and flow rate. Test after adjustments.

S. Building Management System Contractor shall set adjustments of automatically operated inlet vanes, cones, plugs and all dampers to operate as indicated in cooperation with Balancing Contractor.

T. Adjust diffusers, grilles and registers to minimize drafts, dumping, and to prevent "short circuiting" between supply and return outlets.

U. Use volume control devices to regulate air quantities only to extent that adjustments do not create objectionable air motion or sound levels. Effect volume control by duct internal devices such as dampers and splitters. Remove air slots on return air troffers to achieve adequate relief and minimize pressure drop into the ceiling plenum.

V. Vary total system airflow rates by adjustment of fan speeds or fan volume-varying devices. Vary branch air quantities by damper regulation.

W. Record installed fan drive assemblies; fan sheaves, motor sheaves, belts and motors.

X. For fans with two-speed motors, execute the entire air systems procedure at both speeds. This also applies to fans with variable frequency drives when used in normal mode and smoke control modes.

Y. The final balanced condition of each area shall include testing and adjusting of pressure conditions. Test and record building pressurization levels in variable volume systems throughout full range of fan delivery rates, under both heating and cooling conditions. For multi-story buildings, test pressure conditions at ground, intermediate and upper levels. Front doors, stair and vestibule doors, exits and elevator shafts shall be checked for airflow so that leakage does not cause excessive or abnormal pressure conditions. Document abnormal building leakage conditions noted.

Z. Complete balancing to achieve positive building pressure unless otherwise instructed. A positive pressure relative to outside of 0.05-inch water gauge minimum and 0.10-inch water gauge maximum shall be achieved, measure with negligible, outside wind velocity.

3.6 BALANCING DATA

A. Air Handling Equipment Installation Data:
   1. Manufacturer, model and size
   2. Arrangement, discharge and class
   3. Motor type, horsepower, speed, efficiency, voltage, phase, cycles and full load amperes
   4. Location and final identification

DocuSign Envelope ID: 330DEBD6-9A9E-4F34-BDCC-1AC1BAA701E9

B. Air Handling Equipment Design Data:
   1. Total airflow rate
   2. Static pressure across coil, filter, damper, mixing box sections and total
   3. Motor horsepower, speed, efficiency, voltage and amperes
   4. Fan speed and brake horsepower
   5. Hydronic coil inlet and outlet, dry bulb temperatures
   6. Initial filter air pressure drop

C. Air Handling Equipment Recorded Data:
   1. Total airflow rate
   2. Static pressure across coil, filter, damper, mixing box sections and total
   3. Fan speed and brake horsepower
   4. Motor operating amperes
   5. Inlet and outlet, dry bulb temperatures
   6. Filter air pressure drop

D. Duct Air Quantities: Mains, Branches, Outside Air and Exhausts (Maximum and Minimum):
   1. Duct sizes
   2. Number of pressure readings
   3. Sum of velocity measurements
   4. Average velocity
   5. Duct recorded airflow rate
   6. Duct design airflow rates

E. Air Inlets and Outlets:
   1. Inlet/outlet identification location and designation
   2. Manufacturer’s catalogue identification and type
   3. Application factors
   4. Design and recorded velocities
   5. Design and recorded airflow rates
   6. Deflector vane or diffuser cone settings

F. Building Pressurization Data:
   1. Outside air temperatures and humidities
   2. Outside wind velocity
   3. Building pressures plotted with respect to systems
   4. Supply air, return air and exhaust airflow rates for varying damper positions
   5. Locations of pressure measuring points, inside and outside building

G. Smoke Exhaust Data: Supply and Exhaust Flow Rate

H. Air Heating and Cooling Equipment Design Data:
   1. Heat transfer rate
   2. Water pressure drop across coil
   3. Air static pressure drop
   4. Entering and leaving water temperatures
   5. Entering and leaving air dry and wet bulb temperatures

I. Air Heating and Cooling Equipment Recorded Data:
   1. Element type and identification
   2. Entering and leaving air dry and wet bulb temperatures
   3. Entering and leaving water temperatures
   4. Water pressure drop across coil
   5. Water pressure drop across bypass valve
   6. Air static pressure drop
   7. Air and water flow rates
   8. Adjusted temperature rise or drop

END OF SECTION

DocuSign Envelope ID: 330DEBD6-9A9E-4F34-BDCC-1AC1BAA701E9

SECTION 99-233400

HVAC FANS

PART 1 - GENERAL

1.1 WORK INCLUDED

A. The work of this Section shall include, but is not limited to, the following:
   1. Centrifugal Fans:
      a. Cabinet
   2. Ceiling/Wall Fans (Panasonic)

1.2 RELATED DOCUMENTS

A. Section 99-230501 – HVAC General Provisions
B. Section 99-230513 – Common Motor Requirements for HVAC Equipment
C. Section 99-230514 – Variable Frequency Drives for HVAC
D. Section 99-230529 – Hangers and Supports for HVAC
E. Section 99-230548 – Vibration and Seismic Controls for HVAC
F. Section 99-230593 – Testing, Adjusting and Balancing for HVAC
G. Section 99-233100 – HVAC Ducts and Casings
H. Section 99-233313 – Dampers

1.3 REFERENCE STANDARDS

A. Construct all fans, except vaneaxial adjustable blade, to comply with the requirements of the latest editions of the Air Moving and Conditioning Association (AMCA) Standards and Bulletins. Certify these fans by AMCA for performance and sound ratings and provide the AMCA Performance and Construction Seal for Air and Sound.
B. AMCA – Air Movement and Control Association
   1. AMCA Standard 99, Edition 03 – Standards Handbook
   2. AMCA Standard 203, Edition 90 – Field Performance Measurement of Fan Systems
   3. AMCA Standard 204, Edition 05 – Balance Qualities and Vibration Levels for Fans
   4. AMCA Standard 210, Edition 07 – Laboratory Methods of Testing Fans for Certified Aerodynamic Performance ratings
   5. AMCA Standard 300, Edition 08 – Reverberant Room Method for Sound Testing of Fans
C. ABMA – American Bearings Manufacturers Association
   1. ABMA Standard 9 – Load Ratings and Fatigue Life for Ball Bearings
   2. ABMA Standard 11 – Load Ratings and Fatigue Life for Roller Bearings
D. NFPA – National Fire Protection Association
   1. NFPA Standard 90A, Edition 09 – Standard for the Installation of Air Conditioning and Ventilation Systems
   2. NFPA Standard 96, Edition 96, Edition 08 – Standard for Ventilation Control and Fire Protection of Commercial Cooking Operations
E. UL – Underwriters Laboratories Inc.
   1. UL Standard 705, Edition 04 – Powered Ventilators
   2. UL Standard 762, Edition 03 – Powered Roof Ventilators for Restaurant Exhaust Appliances
F. OSHA
   1. OSHA guideline 1910.212 – General Requirements for Machine Guarding
   2. OSHA guideline 1910.219 – General Requirements for Guarding Safe Use of Mechanical Power Transmission Apparatus

DocuSign Envelope ID: 330DEBD6-9A9E-4F34-BDCC-1AC1BAA701E9

1.4 QUALITY ASSURANCE

A. For each fan, provide a multi-speed fan performance curve with multiple horsepowers on a single sheet. Single-speed fan curves are not acceptable.

B. Provide a full two-year parts and labor warrantee for all fan-mounted control air compressors.

C. The maximum allowable fan vibration shall be 0.15 inches per second peak velocity, filter-in as measured at the fan RPM.

1.5 SUBMITTALS

A. Submit construction details, gauges of fan wheels and housing components and certified dimensioned drawings.

B. Submit manufacturer's latest published data for weights, materials, accessories and installation details.

C. Submit full technical rating data based on tests in accordance with current AMCA standards and in an AMCA-approved laboratory. Fan curves shall indicate the relationship of airflow to static or total pressure for various fan speeds. Brake horsepower, recommended selection range, and limits of operation shall also be indicated on the curves. Indicate operating point on the fan curves at design air quantity and indicate the manufacturer's recommended drive loss factor for the specific application. Tabular fan performance data is not acceptable.

1. Include manufacturer's certified fan volume-pressure performance curves, from shut-off to free delivery. Consider drive efficiency in motor selection according to manufacturer's published recommendation or according to AMCA Publication 203, Appendix L.
2. Include certified sound power ratings based on tests performed in accordance with AMCA Standard 300. Correct all ratings and curves for altitude and temperature where applicable.

D. Motor construction and efficiencies.

E. Bearing life calculations based on maximum design speed for the class of each fan scheduled on the Drawing(s).

F. Fan shaft critical speed at scheduled performance.

G. For variable air volume application, include data that indicates the effect of capacity control devices, such as inlet vanes, on performance.

PART 2 - PRODUCTS

2.1 ACCEPTABLE MANUFACTURERS

A. Cabinet Fans: Penn, Panasonic

2.2 GENERAL – ALL FANS

A. Unless noted otherwise, provide discharge direction and drive arrangement to suit space conditions and conform as closely as possible to the layouts shown on the Drawings. Maintain clearance for service and access to all components.

B. Provide factory-fabricated, -assembled, -tested, and -finished fans consisting of housing, wheel, fan shaft, bearings, motor, drive assembly, and support structure. Fans shall be quiet operating and non-overloading over the entire range of operation.

C. Provide fan motors in accordance with Section 99-230513 – Common Motor Requirements for HVAC Equipment. Size motor to drive its respective fan when the fan is operating at a speed 5 percent in excess of that required to meet the scheduled fan performance. Do not select motors within the service factor for this range.

D. Statically and dynamically balance fan wheels/impellers at the factory and certify balance. Design all vertically mounted fans to withstand the vertical thrust loads.

E. Provide precision self-aligning bearings designed to prevent leakage of oil or grease. Provide cups, oil chambers, Zerk or Alemite lubrication fittings in accessible locations for ease of lubrication. Provide heavy-duty split pillow block bearings with tapered, double-row spherical roller assemblies. Provide bearings with ABMA L_{10} service life in excess of 200,000 hours at maximum

DocuSign Envelope ID: 330DEBD6-9A9E-4F34-BDCC-1AC1BAA701E9

published fan operating conditions for the AMCA construction class required unless noted or specified otherwise. Bearings shall be fixed to the fan shaft using concentric mounting locking collars, to reduce vibration, increase service life and improve serviceability. Bearings that use set screws shall not be allowed.

F. Provide copper or steel lubrication leads, for lubrication of internal motors and bearings, extending to a capped termination point external to the fan casing or air-handling unit.

G. Extend wire leads on fans driven by direct motor drive from the motor junction box in air-tight rigid walled conduit, to a junction box mounted external to the fan casing.

H. On fans driven by belt drive, provide standard “V-groove” type oil-resistant, non-sparking, and non-static belts with cast iron or steel sheaves suitable for the service intended. Fan sheaves shall be non-adjustable type with removable machined bushings. Provide adjustable pitch type motor sheaves with double locking feature, to 10 percent above and below the rated fan speed. Dynamically balance sheaves with over three grooves. Provide sufficient quantity of belts and sheaves capable of carrying the entire load with one belt broken.

I. Provide pre-formed expanded metal and sheet metal belt guards at the fan and motor shafts, for all exposed sheaves and belts. Guard shall comply with OSHA and SMACNA requirements; 0.1046-inch thick, ¾-inch diamond-mesh wire screen welded to steel angle frame or equivalent, prime coated. Secure to fan or fan supports without short-circuiting vibration isolation. Include provisions for adjustment of belt tension, lubrication, and use of tachometer with guard in place.

J. For motors in the airstream, provide TEFC type motors, unless other types are required, and as specified in Section 99-230513 – Common Motor Requirements for HVAC Equipment.

K. Provide solid hot-rolled steel drive shafts, machined and polished to a close tolerance where in contact with bearings. Secure fan wheels/impellers to the drive shaft by a key and keyway assembly. Shafts shall be sized for first critical speed and at least 1.43 times maximum speed for AMCA fan class. Shaft length shall allow wheel adjustment of 4 inches.

L. Manufacture fans of materials and paint finishes suitable for the service intended.

M. Construct wheels/impellers exposed to normal atmospheres of cast aluminum or hot-dip galvanized steel and finished with two layers of factory-applied non-scaling paint.

N. Construct fans exposed to corrosive atmospheres using all-welded construction of corrosion-resistant materials suitable for intended use, and factory-finished with epoxy or other approved corrosion-resistant coatings.

O. Electrically ground all fans and drives to prevent accumulation of static charge. Indicate grounding method in fan submittals.

P. Provided threaded drain plugs at fan housing low points.

Q. Completely house fan assemblies exposed to weather in weather-proof enclosures including motor and drive.

R. Fan wheels/impellers and housings shall be relieved of residual stresses produced in the forming process.

S. Provide housings with integral inlet and discharge flanges, complete with bolt holes for flexible or hard duct connections. Shop-fabricate any companion flanges required for connections to sound attenuators. Companion flanges shall be rolled angles matched to both fan housing and sound attenuators.

T. Provide gasketed access doors to permit routine maintenance and inspection of motor and internal components. Inside surface of access door shall be flush with the inside surface of the fan housing.

2.3 CENTRIFUGAL FANS

A. Cabinet Type:
   1. Provide scroll type centrifugal fans, factory-installed within a cabinet enclosure, and comply with the requirements of Scroll Type Centrifugal Fans.
   2. Internally isolate fan and motor assemblies from the cabinet.

DocuSign Envelope ID: 330DEBD6-9A9E-4F34-BDCC-1AC1BAA701E9

3. Provide gasketed access doors and panels for inspection and routine maintenance of the internal components.
4. Provide solid state variable speed controllers for small ceiling-mounted direct driven exhaust and transfer fans.

2.4 CONTROLS

A. Each fan shall be provided with local control capable of the following:
   1. 24 hour, 7 day per week scheduling
   2. Separate fan speed control

B. Local controller shall be wall mounted within the space.

C. Fan speed controller shall be unit mounted.

PART 3 - EXECUTION

3.1 INSTALLATION

A. Install fans in accordance with manufacturer's recommendations and as shown on the Drawings. Follow SMACNA- and AMCA-recommended procedures for fan installations, belt guards, duct connections, etc.

B. Provide flexible connections as described in Section 99-233100 – HVAC Ducts and Casings with sufficient separation of ductwork, plenum panels, or air-handling unit casings from fan assembly to prevent metal-to-metal contact due to start-up torque or operating under specified isolator deflections.

C. Install fans and motors with proper support and vibration isolation as specified in Section 99-230548 – Vibration and Seismic Controls for HVAC, and Section 99-230529 – Hangers and Supports for HVAC.

D. Provide sufficient clearances around fans for access and servicing of components. Install fans such that tachometer openings, access doors, motors, belts, lubrication lines, electrical connections, etc., are readily accessible and not obstructed by other installations or structures.

3.2 START UP

A. Verify thermal-overload protection is installed in motors, starters, and disconnect switches. Verify proper motor rotation direction, fan wheel free rotation and smooth bearing operation. Align and adjust belts, install belt guards and verify lubrication for bearings and other moving parts. Verify that manual and automatic volume control and fire/smoke dampers in connected ductwork systems are fully open.

B. Bump start fans to check that fan wheel/impeller has maintained static and dynamic balance and the rotation corresponds to the desired direction for airflow. Correct fans found to be rotating in a direction opposite to that desired. Unbalanced wheels shall be re-balanced by an AABC-certified test and balance contractor.

C. Tighten belt drives, taking into account the service factor and any other design of the drive. Exercise care not to over-tension belts.

D. Check all bolts and fasteners to ensure proper tightness. Do not over-tighten nuts and bolts.

E. Check bearings and motor for proper lubrication, taking care not to over-lubricate. Use only lubricants recommended by the manufacturer.

END OF SECTION

DocuSign Envelope ID: 330DEBD6-9A9E-4F34-BDCC-1AC1BAA701E9

SECTION 99-235100

BREECHINGS, CHIMNEYS AND STACKS

PART 1 - GENERAL

1.1 WORK INCLUDED

A. The work of this Section shall include, but is not limited to, the following:
   1. Self-supporting high temperature chimney, and breechings, including all fittings, structural supports, fastenings, bracing, sealant, shop and field painting, clean-outdoors, ventilated wall, floor or roof thimbles, flashing, rain hood, guy wires, seismic restraints and any related items.
   2. Self-supporting steel gas vent, including all fittings, structural supports, fastenings, bracing, sealant, shop and field painting, roof terminations, flashing, wall terminations, guy wires, seismic restraints and any related items.
   3. Calculations for vent sizing, seismic and thermal expansion design and associated details.

1.2 RELATED DOCUMENTS

A. Section 99-230501 – HVAC General Provisions

B. Section 99-230548 – Vibration Isolation and Seismic Restraints

C. Section 99-238205 – Space Terminal Heating Units

1.3 REFERENCE STANDARDS

A. NFPA – National Fire Protection Association
   1. NFPA Standard 211, Edition 06 – Standard for Chimneys, Fireplaces, Vents, and Solid Fuel-Burning Appliances

1.4 QUALITY ASSURANCE

A. Units shall be UL Listed for use with heating equipment burning gaseous, solid or liquid fuels that do not exceed continuous operating flue gas temperature above 1,000 degrees F and not exceeding 1,400 degrees F under intermittent conditions as defined in NFPA 211.

B. Units shall be UL Listed for use with heating equipment burning gaseous fuels that do not exceed the requirements for Type B vent as defined in NFPA 211.

C. Units shall be UL Listed for use with heating equipment burning gaseous fuels that do not exceed continuous operating flue gas temperature above 550 degrees F as defined in NFPA 211.

D. The venting system shall develop a positive flow adequate to exhaust flue gases to the atmosphere without condensation within the vent or flue gas spillage. The design shall compensate for thermal expansion.

1.5 SUBMITTALS

A. Provide manufacturer chimney and vent draft calculations. Certify that the calculations are based on actual jobsite conditions and are coordinated with “released-for-construction” equipment submittal data, and that the complete stack and breeching systems stack draft range at equipment outlets are within the equipment manufacturer’s recommended range.

B. Provide backpressure, draft and stack diameter calculations for all possible infrared heater firing combinations.

C. Submit certification that chimney and vent will withstand maximum system pressure developed by the burner blowers, combustion and the venting system.

D. Submit certified dimensioned shop drawings, construction details, mounting details, hardware and accessories.

E. Submit seismic support and restraint calculations stamped and signed by a structural engineer licensed in California.

DocuSign Envelope ID: 330DEBD6-9A9E-4F34-BDCC-1AC1BAA701E9

F. Submit expansion compensation calculations and compensator details.

PART 2 - PRODUCTS

2.1 ACCEPTABLE MANUFACTURERS

A. High Temperature Chimneys: Metalbestos Model IPS, Metal-Fab Inc. Model IPIC, or equal

B. Type B Vents: Metalbestos, Ameri-Vent, Ampco

2.2 HIGH-TEMPERATURE CHIMNEYS, POSITIVE-PRESSURE VENTS AND BOILER STACKS

A. Vent shall be double wall with an outer jacket of aluminized steel 0.025-inch thick for up to 24-inch diameter vents and 0.034-inch thick for larger sizes. The inner wall shall be Type 304 stainless steel of nominal 0.035-inch thickness with a minimum 2 inches of mineral wool insulation between the two metal walls for the boiler flue and 4 inches of mineral wool insulation for engine flues.

B. Vent shall be installed and supported in accordance with factory recommendations and factory-supplied components. Exposed metal protected by a minimum of one base coat and one finish coat of Rust-O-Crylic as manufactured by Rust-Oleum, or approved equal.

C. Inner pipe joints shall be sealed by use of flange draw bands with captive nuts and bolts, and RTV Silicone Sealant for flue gas temperatures up to 600 degrees F; above this temperature joints shall be sealed with high temperature joint cement as outlined in the installation instructions and supplied by the manufacturer.

D. The boiler flues shall be complete with bottom drain and conical vertical discharge.

E. The engine flue shall be complete with bottom drain and flapper type vertical discharge.

2.3 TYPE B GAS VENT

A. Vent shall be double wall with an outer jacket of galvanized steel 0.025-inch thick for up to 24-inch diameter vents and 0.030-inch for larger sizes. The inner wall shall be 26-gauge aluminized steel with a 1-inch air space between the two metal walls.

B. Vent shall be installed and supported in accordance with factory recommendations and factory-supplied components. Exposed metal protected by a minimum of one base coat and one finish coat of Rust-O-Crylic as manufactured by Rust-Oleum, or approved equal.

PART 3 - EXECUTION

3.1 INSTALLATION

A. Comply with local codes, UL Listing, NFPA 211 and factory installation requirements. Coordinate chimney and vent requirements with boiler or appliance listing.

B. Support breeching from structure. Breeching shall not impose load on appliance or chimney.

C. Install breeching and chimney with positive slope back to the appliance. Provide easily accessible condensate drainage connection, configured to prevent condensation from entering the boiler.

D. All branch fittings shall be 45-degree long radius sweep elbow connections in the direction of flue gas flow. All 90-degree elbows shall be long radius.

E. Transitions to increase breeching diameter shall be with an increaser fitting angle of 10 degrees maximum. Increase common breeching manifolds at each branch, and locate the connection within the 10-degree fitting as a “wye” connection.

F. Coordinate exact dimensions and other requirements of floor, roof, wall and partition penetrations with all other subcontractors.

G. Roof penetrations shall be suitable for the roof construction shown and shall follow manufacturer’s installation instructions and local codes.

H. Maintain clearance to combustible or non-combustible construction in compliance with the vent listing.

DocuSign Envelope ID: 330DEBD6-9A9E-4F34-BDCC-1AC1BAA701E9

I. Whenever Excessive Pressure Relief Valves are required, install where indicated on the drawings and where human contact is avoided and away from flammable or combustible materials. Provide a shroud specifically designed for the system as necessary or as identified on the drawings.

END OF SECTION

DocuSign Envelope ID: 330DEBD6-9A9E-4F34-BDCC-1AC1BAA701E9

SECTION 99-238205

SPACE TERMINAL HEATING UNITS

PART 1 - GENERAL

1.1 WORK INCLUDED

A. The work of this Section shall include, but is not limited to, the following:
   1. Gas-fired infrared tube heaters

1.2 RELATED DOCUMENTS

A. Section 99-30501 – HVAC General Provisions

B. Section 99-30513 – Common Motor Requirements for HVAC Equipment

C. Section 99-30548 – Vibration and Seismic Controls for HVAC

1.3 REFERENCE STANDARDS

A. AMCA – Air Movement and Control Association

B. ANSI – American National Standards Institute

C. ASHRAE – American Society of Heating, Refrigerating, and Air-Conditioning Engineers

D. ASTM – American Society for Testing and Materials
   1. ASTM B743 – 2006: Standard Specification for Seamless Copper Tube in Coils

E. CSA – CSA Group

F. NEMA – National Electrical Manufacturers Association

G. NFPA – National Fire Protection Association
   1. NFPA Standard 70, Edition 08 – National Electrical Code

H. OSHA – Occupational Safety Hazard Association

I. UL – Underwriters Laboratories Inc.
   1. UL Standard 486A-486B – 2003, Revised 2006: Wire Connectors

1.4 QUALITY ASSURANCE

A. Heater shall be tested by the manufacturer in accordance with ANSI Z83.20-2008 / CSA 2.34-2008 Standard, and certified by CSA International.

1.5 SUBMITTALS

A. Submit manufacturer's latest information on construction details, capacity data, color samples for architectural review, and installation data.

PART 2 - PRODUCTS

2.1 ACCEPTABLE MANUFACTURERS

A. Gas-Fired Infrared Tube Heaters: Schwank, Space-Ray, SunStar or equal

2.2 GAS-FIRED INFRARED TUBE HEATERS

A. Provide heaters of types, sizes and capacities as shown on the Drawings.

B. General:
   1. Site assembled, modular infrared radiant heating unit for overhead mounted space or area heating application. Supplied with the heater as required for field installation and start-up will be a burner with all necessary factory installed wiring, piping, and controls and a radiant tube/reflector system, complete with hangers and end plates, corresponding in length to the burner input.
   2. The radiant tube type infrared heating unit(s) will be manufactured by Schwank.
   3. Heater size(s) and capacity(s) are as noted on drawing and/or schedule

DocuSign Envelope ID: 330DEBD6-9A9E-4F34-BDCC-1AC1BAA701E9

C. Emitting Tube System:
   1. General:
      a. All tubes will be 4 inch diameter with an emitting surface area of 152 in² per linear foot
      b. For inputs up to and including 130,000 Btuh the 10 foot combustion tube adjoining to the burner will be constructed of 16 gauge aluminized steel
      c. For inputs equal to and greater than 160,000 Btuh the 10 foot combustion tube adjoining to the burner will be constructed of 16 gauge 439 grade stainless steel with a following 10 foot length of 16 gauge aluminized steel
      d. The balance of the heat exchanger tube system (lengths as approved for burner input) will be 10 ft lengths of 16 gauge hot rolled steel
      e. Hot rolled heat exchanger tubes will be coated with a high temperature emissive coating
      f. The system tubes will have a swage of approximately 4 inches in length to accommodate the connection of subsequent tubes and vent pipe at the heater termination
      g. Each tube connection in the system will be secured in place with a 4 inch coupler

D. Reflector Shield System:
   1. General:
      a. Reflector shields will be constructed of minimum 21 gauge high grade steel with a heat and corrosion resistant hot-bonded aluminum-silicon alloy coating.
      b. A high temperature Alkaline Earth Silicate refractory insulation of ½ inch thickness will be assembled between an inner and outer reflector shield and serve to reduce heat emission from the outer surface of the reflector shield assembly and thereby directing more radiant heat to the work space
      c. The insulated reflector system will enclose the emitting tube system on the top and two sides and extend to the bottom surface of the tube system to entrap convection heat around the tube system, thereby increasing overall tube temperature and infrared heat emission
      d. The reflector system will have aluminized-steel sheet metal end caps at each end of the system to minimize the escape of entrapped convection heat

E. Tube/Reflector Suspension System:
   1. General:
      a. The tube/reflector system will have two steel wire hangers with steel channel cross beams per each tube/reflector section that will serve to support the system, allow free expansion of the tube and reflector system, and allow the free passage of entrapped convection heat along the length of the system to promote more uniform heat output along the length
      b. The wire hangers will enable suspension of the system so that the reflector shields can be oriented about the short axis of the system at a fixed angle between 0° to 35°
      c. The entire tube/reflector system will be suspended from the structure per manufacturer's installation instructions
      d. The suspension hardware will be capable of suspending a weight of 90 lb. at the first hanger at the burner end, and 60 lb. at each subsequent hanger in the system.

F. Burner:
   1. General:
      a. The burner assembly will have a blower to create a positive pressure system
      b. The blower will provide combustion air flow directly to the burner so that electronic burner components are isolated from the air flow
      c. The blower will be fitted with a 4 inch (100 mm) diameter collar in case site conditions warrant connection of outside combustion air
      d. The burner assembly will operate on natural gas
      e. The burner assembly will be housed in a pre-painted sheet metal protective cabinet
      f. The burner cabinet will be of a 'clam-shell' design, enabling the lower portion to open downward on a hinge to provide service access to all burner components

DocuSign Envelope ID: 330DEBD6-9A9E-4F34-BDCC-1AC1BAA701E9

g. To facilitate servicing, the burner will be operable with the burner cabinet in the 'open' position

2. Heater will ensure controlled combustion with model configurations of input and tube length providing a minimum combustion efficiency of 81%. Combustion will produce a limited volume of noxious component CO (< 20 ppm).

G. Controls and Safeties:

1. General:
   a. Electrical Rating: The burner will operate on a 115Vac, 60Hz electrical supply with a current rating of no less than 1.5A at 115Vac
   b. Heater gas and ignition controls will be readily accessible for servicing.
   c. The burner will have solid state direct spark ignition and flame sensor control that is dedicated to secure the operation of the burner
2. Ignition and Flame Control:
   a. To complete the direct spark ignition system the burner will incorporate a gas control and 25Vac transformer
   b. Burner will be complete with a low voltage (25Vac), solid state direct spark ignition and ionization flame sensing control module that will provide a 30 second pre-ignition purge of the system by the blower. Electrical Rating: 25Vac, 60Hz with current rating of 0.2A at 25Vac
   c. Burner will be complete with an igniter/sensor to provide spark ignition and flame sensing.
   d. The ionization module will sense the presence of main burner flame and discontinue spark ignition. If the burner fails to ignite within the trial-for-ignition period, the flame control will go into safety lockout. Reset of the control is manually done from the thermostat.
   e. The ionization module will check for a false flame condition (short to ground) and lock out if a false flame condition is present.
   f. The ignition module will have a 21 second trial-for-ignition period
   g. The ignition module will open the main gas valve and generate 30,000 volts at the spark igniter for direct ignition of the burner.
   h. On a loss of burner flame the timed trial-for-ignition is repeated. Safety lockout occurs if flame is not reestablished within the 21 second trial-for-ignition period. Reset of the control is manually done from the thermostat or electrical supply.
3. Gas Control:
   a. Heater will be complete with a direct ignition gas control with a manual valve, two automatic operators, and a pressure regulator
   b. Electrical Rating: 24Vac, 60Hz; draw 0.5A with both operators energized
   c. The gas control will have an inlet pressure tap and an outlet pressure tap to facilitate measurement of gas supply and manifold pressures during servicing.
   d. Heater will be complete with a ½" pipe nipple for connection to the gas supply.
4. Heater Temperature Control:
   a. Burner will be complete with a 24/120Vac relay switch; inclusion or removal of a jumper wire will enable control of the heater using the thermostat of 24Vac
   b. Where multiple heaters are to be controlled in a zone by a single 24Vac thermostat, a Transformer/Relay shall be supplied by the manufacturer.
   c. Space Heating: Each heater zone will be controlled by a 24 Vac infrared set-back thermostat, or other 24 Vac thermostat as supplied by the manufacturer
5. Safety Controls:
   a. Burner will be complete with a pressure switch in the ignition system electrical circuit that will close upon proving a sufficient supply of combustion air from the blower
   b. Burner will further be complete with a separate pressure switch in the ignition system electrical circuit that will open upon pressure resulting from a blocked flue condition in the tube system

DocuSign Envelope ID: 330DEBD6-9A9E-4F34-BDCC-1AC1BAA701E9

H. Exhaust Requirements:
   1. When vented directly to the outside, the gas fired infrared heating system installation will comply with the manufacturer's installation instructions, the current National Natural Gas and Propane Installation Code and all applicable local codes using:
      a. A 4 inch (100 mm) single wall vent pipe of a gauge prescribed by national and/or local codes
      b. A section of double walled vent will be used for that portion of the vent that passes though the wall or roof
      c. The vent will be terminated with a cap as recommended by the manufacturer

PART 3 - EXECUTION

3.1 INSTALLATION

A. Install infrared tube heaters as detailed on the architectural drawings and follow manufacturer's instructions.

3.2 TEST AND BALANCE

A. All work shall be in accordance with the Associated Air Balance Council Standards.

B. Contractor Cooperation
   1. Mechanical Contractor shall cooperate with the Balancing Contractor to:
      a. Provide sufficient time before final completion date and individual equipment manufacturer's start-up so that balancing can be accomplished.
      b. Provide immediate materials, labor and tools to make corrections without delay.
      c. Place heating systems and equipment into full operation and continue the operation for each working day of testing and balancing.
      d. Advise Testing and Balancing Contractor of changes made to the system during construction.
      e. Install required test holes or wells complete with removable and replaceable plugs or caps.
      f. Make necessary revisions to controls, valves, dampers, and fan drives and consult with equipment manufacturers as required to achieve the specified system's performance.
      g. Supply and install dampers as specified and shown on the Drawings, and where required to obtain final system balance.
      h. Provide lifts, ladders, scaffolds, tools and labor to assist the work of the Balancing Contractor, including removing ceiling tiles, guards, adjusting pulleys, belts; replace when finished.
      i. HVAC Controls System Contractor shall cooperate with and work with the Balancing Contractor as required for readjusting of dampers, devices or controls that are not properly calibrated.
      j. Set pressure-regulating and -reducing valves to operating and code conditions.
      k. Check and set relief and safety valves to code requirements.

C. Confirm proper operation – on, off, firing staging – of all space terminal heating units. Confirm units controlled by a common thermostat stage accordingly.

D. Submit final report of test and balance for Architect's review.

END OF SECTION

DocuSign Envelope ID: 330DEBD6-9A9E-4F34-BDCC-1AC1BAA701E9

SECTION 99-260501

ELECTRICAL GENERAL PROVISIONS

PART 1 - GENERAL

1.1 DESCRIPTION

A. The General and Supplementary Conditions are a part of the requirements for the work under this Division of the Specifications.

1.2 WORK INCLUDED

A. Provide labor and materials required to install, test and place into operation the electrical systems as called for in the Contract Documents, and in accordance with applicable codes and regulations.

B. Provide labor, materials, and accessories required to provide complete, operating electrical systems. Labor, materials or accessories not specifically called for in the Contract Documents, but required to provide complete, operating electrical systems shall be provided without additional cost to the Owner.

1.3 QUALITY ASSURANCE

A. Comply with the current applicable codes, ordinances, and regulations of the Authority or Authorities Having Jurisdiction, the rules, regulations and requirements of the utility companies serving the project, and the Owner's insurance underwriter.

B. Drawings, specifications, codes and standards are minimum requirements. Where requirements differ, the most stringent apply.

C. Should any change in drawings or specifications be required to comply with governing regulations, notify the Architect prior to submitting bid.

D. All electrical equipment, materials, devices and installations shall meet or exceed minimum requirements of ADA, ANSI, ASTM, IEEE, IES, NEC, NEMA, NETA, NFPA, OSHA, SMACNA, UL, and the State Fire Marshal.

E. Execute work in strict accordance with the best practices of the trades in a thorough, substantial, workperson-like manner by competent workpeople. Provide a competent, experienced, full-time Superintendent who is authorized to make decisions on behalf of the Contractor.

F. Equipment shall be certified for use in the State of California and shall meet the California energy code.

1.4 ABBREVIATIONS AND DEFINITIONS

A. Abbreviations:

1. ADA Americans with Disabilities Act
2. ANSI American National Standards Institute
3. ASA Acoustical Society of America
4. ASTM American Society for Testing and Materials
5. BIL Basic Impulse Level
6. CBM Certified Ballast Manufacturers
7. ECC Engineer's Control Center
8. EIA Electronic Industries Alliance
9. ETL Electrical Testing Laboratories, Inc.
10. FCC Fire Control Center
11. FM Factory Mutual
12. IEEE Institute of Electrical and Electronic Engineers
13. IES Illuminating Engineering Society
14. IPCEA International Power Cable Engineers Association
15. LED Light Emitting Diode
16. NEC National Electric Code
17. NEMA National Electrical Manufacturers Association

DocuSign Envelope ID: 330DEBD6-9A9E-4F34-BDCC-1AC1BAA701E9

18. NETA National Electrical Testing Association
19. NFPA National Fire Protection Association
20. OEM Original Equipment Manufacturer
21. OSHA Occupational Safety and Health Administration
22. SCC Security Control Center
23. SMACNA Sheet Metal and Air Conditioning Contractors National Association
24. TIA Telecommunications Industry Association
25. UL Underwriters Laboratories Inc.

B. Definitions:
1. Where it is stated in these specifications to submit to Engineer for review, refer to Architectural General and Supplementary Conditions for proper procedures.
2. FURNISH means to supply all materials, labor, equipment, testing apparatus, controls, tests, accessories and all other items customarily required for the proper and complete application.
3. INSTALL means to join, unite, fasten, link, attach, set up or otherwise connect together before testing and turning over to Owner, complete and ready for regular operation.
4. PROVIDE means to FURNISH and INSTALL.
5. AS DIRECTED means as directed by the Architect, or the Architect's Representative.
6. CONCEALED means embedded in masonry or other construction, installed behind wall furring or within drywall partitions, or installed within hung ceilings.
7. SUBMIT means submit to Architect for review.

1.5 GUARANTEE

A. Submit a single guarantee stating that the work is in accordance with the Contract Documents. Guarantee work against faulty and improper material and workmanship for a period of one year from the date of final acceptance by the Owner, except that where guarantees or warranties for longer terms are provided or specified herein, the longer term shall apply. Correct any deficiencies, which occur during the guarantee period, within 24 hours of notification, without additional cost to the Owner, to the satisfaction of the Owner. Obtain similar guarantees from subcontractors, manufacturers, suppliers and subtrade specialists.

1.6 USE OF THE ARCHITECT'S AND ENGINEER'S DRAWINGS

A. The Contractor shall obtain, at the Contractor's request, from the Architect or Engineer a set of AutoCad or compatible format architectural and engineering drawings on electronic media where desired by the Contractor and/or required by the Specifications for use in preparing the shop drawings, coordination drawings, and record drawings. The Contractor shall provide to the Architect and Engineer a written release of liability acceptable to the Architect and Engineer prior to receiving the electronic media.

PART 2 - PRODUCTS

2.1 EQUIPMENT AND MATERIALS

A. Provide products and materials that are new, clean, free of defects, and free of damage and corrosion.

B. Products and materials shall not contain asbestos, PCB, or any other material that is considered hazardous by the Environmental Protection Agency or any other Authority Having Jurisdiction.

C. Replace materials of less than specified quality and relocate work incorrectly installed as directed by the Architect at no additional cost to the Owner.

D. Provide name/data plates on major components of equipment with manufacturer's name, model number, serial number, capacity data and electrical characteristics attached in a conspicuous place.

E. Install materials and equipment with qualified trades people.

F. Maintain uniformity of manufacturer for equipment used in similar applications and sizes.

G. Fully lubricate equipment where required.

DocuSign Envelope ID: 330DEBD6-9A9E-4F34-BDCC-1AC1BAA701E9

H. Follow manufacturer's instructions for installing, connecting, and adjusting equipment. Provide a copy of such instructions at the equipment during installation.

I. Where factory testing of equipment is required to ascertain performance, and attendance by the Owner's Representative is required to witness such tests, associated travel costs and subsistence shall be paid for by the Contractor.

J. Equipment capacities, ratings, etc., are scheduled or specified for job site operating conditions. Equipment sensitive to altitude shall be derated with the method of derating identified on the submittals.

K. Enclosures for electrical equipment installed in mechanical equipment rooms shall be NEMA type 1 gasketed. Enclosures for electrical equipment installed outdoors shall be NEMA type 3R.

L. Energy consuming equipment shall be certified for use in the State of California and shall meet the California Energy Code and local energy ordinances.

2.2 SUBSTITUTIONS

A. Contract Documents are based on equipment manufacturers as called out in the Specifications and indicated on the Drawings. Acceptance of substitute equipment manufacturers does not relieve Contractor of the responsibility to provide equipment and materials, which meet the performance as, stated or implied in the Contract Documents.

B. Submit proposals to provide substitute materials or equipment, in writing, with sufficient lead time for review prior to the date equipment must be ordered to maintain project schedule. Reimburse Owner for costs associated with the review of the proposed substitution whether substitution is accepted or rejected.

C. Indicate revisions required to adapt substitutions including revisions by other trades. Substitutions that increase the cost of the work and related trades are not permitted.

D. The proposed substitution shall conform to the size, ratings, and operating characteristics of the equipment or systems as specified and shown on the Drawings.

E. Proposals for substitutions shall include the following information:
   1. A description of the difference between the Contract Document requirements and that of the substitution, the comparative features of each, and the effect of the change on the end result performance. Include the impact of all changes on other contractors and acknowledge the inclusion of additional costs to the other trades.
   2. Schematic drawings and details.
   3. List of revisions to the Contract Documents that must be made if the substitution is accepted.
   4. Estimate of costs the Owner may incur in implementing the substitution, such as test, evaluation, operating and support costs.
   5. Statement of the time by which a Contract modification accepting the substitution must be issued, noting any effect on the Contract completion time or the delivery schedule.
   6. A statement indicating the reduction to the Contract price if the Owner accepts the substitution. Include required modifications to all related trades.

PART 3 - EXECUTION

3.1 FEES AND PERMITS

A. Pay all required fees and obtain all required permits related to the electrical installation.

B. Pay royalties or fees in connection with the use of patented devices and systems.

C. Provide controlled inspection where required by Authorities Having Jurisdiction or by these specifications.

3.2 SUBMITTALS AND REVIEWS

A. Submit shop drawings, manufacturer's product data sheets, samples, and test reports as specified.

DocuSign Envelope ID: 330DEBD6-9A9E-4F34-BDCC-1AC1BAA701E9

B. Within two months after notice to proceed by the Owner or Owner's Representative, or after execution of Owner/Contractor Agreement, submit a complete typed list of all electrical equipment manufacturers and material suppliers for the equipment proposed to be provided on this project, as well as names of all subcontractors.

C. Within four months after notice to proceed by the Owner or Owner's Representative, or after execution of Owner/Contractor Agreement, prepare an index of all submittals for the project. Include a submittal identification number, a cross-reference to the Specification sections or Drawing number, and an item description. Prefix the submittal identification number by the Specification sections to which they apply. Indicate on each submittal, the submittal identification number in addition to the other data specified. All subcontractors shall utilize the assigned submittal identification number.

D. After the Contract is awarded, obtain complete shop drawings, product data and samples from the manufacturers, suppliers, vendors, and all subcontractors, for all materials and equipment as specified. Submit data and details of such materials and equipment for review. Prior to submission, certify that the shop drawings, product data and samples are in compliance with the Contract Documents. Check all materials and equipment upon their arrival on the job site and verify their compliance with the Contract Documents. Modify any work, which proceeds prior to receiving accepted shop drawings as required to comply with the Contract Documents and the shop drawings.

E. Review of submittals is for general compliance with the design concept and Contract Documents. Comments or absence of comments shall not relieve the Contractor from compliance with the Contract Documents. The Contractor remains solely responsible for details and accuracy, for confirming and correlating all quantities and dimensions, for selecting fabrication processes, for techniques of construction, for performing the work in a safe manner, and for coordinating the work with that of other trades.

F. No part of the work shall be started in the shop or in the field until the shop drawings and samples for that portion of the work have been submitted and accepted.

G. A minimum period of ten working days, exclusive of transmittal time, will be required in the Engineer's office each time a shop drawing, product data and/or samples are submitted for review. This time period must be considered by the Contractor in the scheduling of the work.

H. Submit one vellum and two bond prints of all items requiring shop drawings. Submit six copies of manufacturer's product submittals.

I. Submittals will be stamped as follows:

Stamp	Interpretation
No Exceptions Noted	Fabrication, manufacture, or construction may proceed providing submittal complies with the Contract Documents.
Exceptions Noted [ ] Resubmit for Record [ ] No Resubmission Required	Fabrication, manufacture, or construction may proceed providing submittal complies with the Contract Documents and the Engineer's notations are complied with. Within this category are two options: A resubmission for our records is required when corrections are necessary; A resubmission is not required if there are only minor comments.
Revise and Resubmit	The submittal does not comply with the Contract Documents; do not proceed with fabrication, manufacture, or construction. The work and shop drawings are not permitted at the job site. Resubmit appropriate shop drawings.

DocuSign Envelope ID: 330DEBD6-9A9E-4F34-BDCC-1AC1BAA701E9

J. Submit materials and equipment by manufacturer, trade name, and model number. Include copies of applicable brochure or catalog material. Maintenance and operating manuals are not acceptable substitutes for shop drawings.

K. Identify each sheet of printed submittal pages (using arrows, underlining or circling) to show applicable sizes, types, model numbers, ratings, capacities and options actually being proposed. Cross out non-applicable information. Note specified features such as materials or paint finishes.

L. Include dimensional data for roughing in and installation and technical data sufficient to verify that equipment meets the requirements of the Contract Documents. Include wiring, piping and service connection data.

M. Maintain a complete set of reviewed and stamped shop drawings and product data on site.

N. For each room or area of the building containing electrical equipment, submit the following:

1. Floor Plans: Plan and elevation layout drawings indicating the equipment in the exact location in which it is intended to be installed. These plans shall be of a scale not less than ¼ inch to 1 foot. They shall be prepared in the following manner:
   a. Indicate the physical boundaries of the space including door swings and ceiling heights and ceiling types (as applicable).
   b. Illustrate all electrical equipment proposed to be contained therein. Include top and bottom elevations of all electrical equipment. The Drawings shall be prepared utilizing the dimensions contained in the individual equipment submittals. Indicate code and manufacturer's required clearances.
   c. Illustrate all other equipment therein such as conduits, detectors, luminaries, ducts, registers, pull boxes, wireways, structural elements, etc.
   d. Indicate the operating weight of each piece of equipment.
   e. Indicate the heat release from each piece of electrical equipment in terms of BTU per hour. This information shall be that which is supplied by the respective manufacturers.
   f. Illustrate concrete pads, curbs, etc.
   g. Indicate dimensions to confirm compliance with code-required clearances.
   h. Indicate maximum normal allowable operating temperature for each piece of equipment (as per each respective manufacturer's recommendation).
   i. Equipment removal routes.

O. The work described in shop drawing submissions shall be carefully checked by all trades for clearances (including those required for maintenance and servicing), field conditions, maintenance of architectural conditions and coordination with other trades on the job. Each submitted shop drawing shall include a certification that related job conditions have been checked by the Contractor and each Subcontractor and that conflicts do not exist.

P. The Contractor is not relieved of the responsibility for dimensions or errors that may be contained on submissions, or for deviations from the requirements of the Contract Documents. The noting of some errors but overlooking others does not grant the Contractor permission to proceed in error. Regardless of any information contained in the shop drawings, product data and samples, the Contract Documents govern the work and are neither waived nor superceded in any way by the review of shop drawings, product data and samples.

Q. Inadequate or incomplete shop drawings, product data and/or samples will not be reviewed and will be returned to the Contractor for resubmittal.

R. Indicate the following on the lower right hand corner of each shop drawing and on the front cover of each product data brochure cover: The submittal identification number; title of the sheet or brochure; name and location of the project; names of the Architect, Engineer, Contractor, Subcontractor, manufacturer, supplier, and vendor; the date of submittal; and the date of each correction, version and revision. Number all pages and drawings in product data brochures consecutively from beginning to end. Unless the above information is included, the submittal will be returned for resubmission. Resubmittals of product data or brochures shall include a cover letter summarizing the corrections made in response to the review comments.

DocuSign Envelope ID: 330DEBD6-9A9E-4F34-BDCC-1AC1BAA701E9

S. The distribution equipment, short circuit and coordination study, and room layout submittals shall be submitted concurrently. Failure to submit concurrently may result in the immediate return of the submittal marked “REVISE AND RESUBMIT”.

3.3 COORDINATION OF WORK

A. The Contract Documents establish scope, materials and quality but are not detailed installation instructions. Drawings are diagrammatic.

B. Coordinate work with related trades and furnish, in writing, any information necessary to permit the work of related trades to be installed satisfactorily and with the least possible conflict or delay.

C. The electrical drawings show the general arrangement of equipment and appurtenances. Follow these drawings as closely as the actual construction and the work of other trades will permit. Provide offsets, fittings, and accessories, which may be required but not shown on the Drawings. Investigate the site, and review drawings of other trades to determine conditions affecting the work, and provide such work and accessories as may be required to accommodate such conditions.

D. The locations of lighting fixtures, outlets, panels and other equipment indicated on the Drawings are approximately correct, but they are understood to be subject to such revision as may be found necessary or desirable at the time the work is installed in consequence of increase or reduction of the number of outlets, or in order to meet field conditions, or to coordinate with modular requirements of ceilings, or to simplify the work, or for other legitimate causes.

E. Exercise particular caution with reference to the location of panels, outlets, switches, etc., and have precise and definite locations accepted by the Architect before proceeding with the installation.

F. The Drawings show only the general run of raceways and approximate locations of outlets. Any significant changes in location of outlets, cabinets, etc., necessary in order to meet field conditions shall be brought to the immediate attention of the Architect for review before such alterations are made. Modifications shall be made at no additional cost to the Owner.

G. Verify with the Architect the exact location and mounting height of outlets and equipment not dimensionally located on the Drawings prior to installation.

H. Circuit tags in the form of numbers are used where shown to indicate the circuit designation numbers in electrical panels. Show the actual circuit numbers on the as-built Record Drawings and on the associated typed panelboard directory card. Where circuiting is not indicated, provide required circuiting in accordance with the loading indicated on the Drawings and/or as directed.

I. The Drawings generally do not indicate the number of wires in conduit for the branch circuit wiring of fixtures and outlets, or the actual circuiting. Provide the correct wire size and quantity as required by the indicated circuiting and/or circuit numbers indicated, the control intent, referenced wiring diagrams (if any), the specified voltage drop or maximum distance limitations, and the applicable requirements of the NEC.

J. Carefully check space requirements with other trades to insure that equipment can be installed in the spaces allotted.

K. Wherever work interconnects with work of other trades, coordinate with other trades to insure that they have the information necessary so that they may properly install the necessary connections and equipment. Identify items (remote ballast, pull boxes, etc.) requiring access in order that the ceiling trade will know where to install access doors and panels.

L. Consult with other trades regarding equipment so that, wherever possible, motor controls and distribution equipment are of the same manufacturer.

M. Furnish and set sleeves for passage of electrical risers through structural masonry and concrete walls and floors and elsewhere as required for the proper protection of each electrical riser passing through building surfaces.

N. Provide firestopping around all pipes, conduits, ducts, sleeves, etc. which pass through rated walls, partitions and floors.

DocuSign Envelope ID: 330DEBD6-9A9E-4F34-BDCC-1AC1BAA701E9

O. Provide detailed information on openings and holes required in precast members for electrical work.

P. Provide required supports and hangers for conduit and equipment, designed so as not to exceed allowable loadings of structures.

Q. Examine and compare the Contract Documents with the drawings and specifications of other trades, and report any discrepancies between them to the Architect and obtain written instructions for changes necessary in the work. Install and coordinate the work in cooperation with other related trades. Before installation, make proper provisions to avoid interferences.

R. Wherever the work is of sufficient complexity, prepare additional detail drawings to scale to coordinate the work with the work of other trades. Detailed work shall be clearly identified on the Drawings as to the area to which it applies. Submit these drawings to the Architect for review. At completion include a set of these drawings with each set of Record Drawings.

S. Furnish services of an experienced Superintendent, who shall be in constant charge of all work, and who shall coordinate work with the work of other trades. No work shall be installed before coordinating with other trades.

T. Coordinate with the local electric utility company and the local telephone company as to their requirements for service connections and provide all necessary metering provisions, grounding, materials, equipment, labor, testing, and appurtenances.

U. Before commencing work, examine adjoining work on which this work is in any way affected and report conditions, which prevent performance of the work. Become thoroughly familiar with actual existing conditions to which connections must be made or which must be changed or altered.

V. Adjust location of conduits, panels, equipment, etc., to accommodate the work to prevent interferences, both anticipated and encountered. Determine the exact route and location of each conduit prior to fabrication.

1. Right-of-Way: Lines which pitch have the right-of-way over those which do not pitch. For example: condensate, steam, and plumbing drains normally have right-of-way. Lines whose elevations cannot be changed have right-of-way over lines whose elevations can be changed.
2. Provide offsets, transitions and changes in direction of conduit as required to maintain proper headroom and pitch on sloping lines.

W. In cases of doubt as to the work intended, or in the event of need for explanation, request supplementary instructions from the Architect.

3.4 EXAMINATION OF SITE

A. Prior to the submitting of bids, visit the project site and become familiar with all conditions affecting the proposed installation and make provisions as to the cost thereof.

B. The Contract Documents do not make representations regarding the character or extent of the sub-soils, water levels, existing structural, mechanical and electrical installations, above or below ground, or other sub-surface conditions which may be encountered during the work. Evaluate existing conditions, which may affect methods or cost of performing the work, based on examination of the site or other information. Failure to examine the Drawings or other information does not relieve the Contractor of responsibility for the satisfactory completion of the work.

3.5 EXCAVATION AND BACKFILL

A. Provide excavation for the work of this Division. Excavate all material encountered, to the depths indicated on the Drawings or as required. Remove from the site excavated materials not required or suitable for backfill. Provide grading as may be necessary to prevent surface water from flowing into trenches or other excavations. Remove any water, which accumulates. Provide sheeting and shoring as may be necessary for the protection of the work and for the safety of personnel.

B. Provide trenches of widths necessary for the proper execution of the work. Grade bottom of the trenches accurately to provide uniform bearing and support the work on undisturbed soil at every point along its entire length. Except where rock is encountered, do not excavate below the depths

DocuSign Envelope ID: 330DEBD6-9A9E-4F34-BDCC-1AC1BAA701E9

indicated. Where rock excavations are required, excavate rock to a minimum overdepth of four inches below the trench depths indicated on the Drawings or required. Backfill overdepths in the rock excavation and unauthorized overdepths with loose, granular, moist earth, thoroughly machine-tamped to a compaction level of at least 95 percent to standard proctor density or 75 percent relative density or as specified by the Architect. Whenever unstable soil that is incapable of properly supporting the work is encountered in the bottom of the trench, remove soil to a depth required and backfill the trench to the proper grade with coarse sand, fine gravel or other suitable material.

C. Excavate trenches for utilities that will provide the following minimum depths of cover from existing grade or from indicated finished grade, whichever is lower, unless otherwise specifically shown:
   1. Electric service: two feet minimum.
   2. Telephone service: two feet minimum.

D. Trenches should not be placed within ten feet of foundation or soil surfaces, which must resist horizontal forces.

E. Do not backfill trenches until all required tests have been performed and installation observed by the Architect. Comply with the requirements of other sections of the Specifications. Backfill shall consist of non-expensive soil with limited porosity. Deposit in six layers and thoroughly and carefully tamp until the work has a cover of not less than one foot. Backfill and tamp remainder of trench at one-foot intervals until complete. Uniformly grade the finished surface.

3.6 CUTTING AND PATCHING

A. Where cutting, channeling, chasing or drilling of floors, walls, partitions, ceilings or other surfaces is necessary for the proper installation, support or anchorage of conduit or other equipment, lay out the work carefully in advance. Repair any damage to the building, piping, equipment or defaced finished plaster, woodwork, metalwork, etc., using skilled tradespeople of the trades required at no additional cost to the Owner.

B. Do not cut, channel, chase or drill unfinished masonry, tile, etc., unless permission from the Architect is obtained. If permission is granted, perform this work in a manner acceptable to the Architect.

C. Where conduit or equipment are mounted on a painted finished surface, or a surface to be painted, paint to match the surface. Cold galvanize bare metal whenever support channels are cut.

D. Provide slots, chases, openings and recesses through floors, walls, ceilings, and roofs as required. Where these openings are not provided, provide cutting and patching to accommodate penetrations at no additional cost to the Owner.

3.7 MOUNTING HEIGHTS

A. Mounting heights shall conform to ADA requirements.

B. Verify exact locations and mounting heights with the Architect before installation.

C. Electrical and telecommunications outlets shall be mounted no higher than 48 inches above finished floor to top of the outlet box and no lower than 15 inches above finished floor to bottom of the outlet box.

D. Electrical switches shall be mounted no higher than 44 inches above finished floor to top of the outlet box and no lower than 36 inches above finished floor to bottom of the outlet box.

E. Fire alarm manual pull stations shall be mounted no higher than 48 inches above finished floor to top of the outlet box and no lower than 36 inches above finished floor to bottom of the outlet box.

F. Outlets for public and other wall-mounted type telephones shall be installed so that the particular telephone installed conforms to ADA mounting height requirements.

G. Visual Alarms: Mount not less than 80 inches to the bottom or 96 inches to the top of the device.

H. Wall-Mounted Exit Signs: Two inches above top of door to bottom of sign.

I. Low-Level Exit Signs: Six inches to bottom of sign.

DocuSign Envelope ID: 330DEBD6-9A9E-4F34-BDCC-1AC1BAA701E9

J. Stairwell and utility corridor wall-mounted lighting fixtures shall be mounted 8 feet-6 inches above finished floor or one foot below ceiling or structure above, whichever is lower.

3.8 CONTINUANCE OF EXISTING SERVICES

A. Existing electrical services not specifically indicated to be removed or altered shall remain as they presently exist.

B. Where existing services interfere with new construction, alter or reroute such existing equipment to facilitate new construction after obtaining written permission from the Architect. Notification in writing giving two weeks advance notice of planned alteration is required.

C. Preserve continuity of service of existing facilities (related to damage or alteration due to new construction). Unauthorized alteration to existing equipment shall be corrected without additional cost to the Owner.

3.9 DEMOLITION

A. Remove, relocate, and reroute existing electrical equipment to facilitate new construction or remodeling work.

B. Examine the site before submitting a bid to observe existing conditions. Obtain Owner approval for scheduling a visit to the site.

C. Schedule demolition in advance. Schedule work to avoid disruption of normal operations.

D. Reconnect circuits serving equipment required to remain in service to other panelboards, motor control centers, or other appropriate distribution equipment. Provide additional panelboards, motor control centers, or other appropriate distribution equipment where there is insufficient available capacity in remaining existing equipment for reconnection.

E. Remove existing conduit and wire back to panelboard, motor control center, or other distribution source.

F. Where a circuit is interrupted by removal of a device or fixture from that circuit, provide additional conduit and wire to restore service to the remaining devices and fixtures on that circuit.

G. Electrical equipment to be removed that is in good working order shall be carefully removed and offered to the Owner. Items rejected by the Owner shall be removed from the project site and properly disposed of.

3.10 CLEANING UP

A. Avoid accumulation of debris, boxes, loose materials, crates, etc., resulting from the installation of this work. Remove from the premises each day all debris, boxes, etc., and keep the premises clean and free of dust and debris.

B. Clean all fixtures and equipment at the completion of the project. Wipe clean exposed lighting fixture reflectors and trim pieces with a non-abrasive cloth just prior to occupancy.

C. All electrical equipment shall be thoroughly vacuumed and wiped clean prior to energization and at the completion of the project. Equipment shall be opened for observation by the Architect as required.

3.11 WATERPROOFING

A. Avoid, if possible, the penetration of any waterproof membranes such as roofs, machine room floors, basement walls, and the like. If such penetration is necessary, make penetration prior to the waterproofing and furnish all sleeves or pitch-pockets required. Advise the Architect and obtain written permission before penetrating any waterproof membrane, even where such penetration is shown on the Drawings.

B. Restore waterproofing integrity of walls or surfaces after they have been penetrated without additional cost to the Owner.

DocuSign Envelope ID: 330DEBD6-9A9E-4F34-BDCC-1AC1BAA701E9

3.12 SUPPORTS

A. Support work in accordance with the best industry practice. Provide supports, hangers, auxiliary structural members and supplemental hardware required for support of the work.

B. Provide supporting frames or racks extending from floor slab to ceiling slab for work indicated as being supported from walls where the walls are incapable of supporting the weight. In particular, provide such frames or racks in electric closets and mechanical equipment rooms.

C. Provide supporting frames or racks for equipment which is to be installed in a freestanding position.

D. Supporting frames or racks shall be of standard angle, standard channel or specialty support system steel members, rigidly bolted or welded together and adequately braced to form a substantial structure. Racks shall be of ample size to assure a workmanlike arrangement of all equipment mounted on them.

E. Adequate support of equipment (including outlet, pull and junction boxes and fittings) shall not depend on electric conduits, raceways, or cables for support.

F. Electrical equipment shall not rest on or depend for support on suspended ceiling media (tiles, lath, plaster, as well as splines, runners, bars and the like in the plane of the ceiling). Provide independent support of electrical equipment. Do not attach to supports provided for ductwork, piping or work of other trades.

G. Provide required supports and hangers for conduit, equipment, etc., so that loading will not exceed allowable loadings of structure. Electrical equipment and supports shall not come in contact with work of other trades.

3.13 FASTENINGS

A. Fasten equipment to building structure in accordance with the best industry practice.

B. Where weight applied to building attachment points is 100 pounds or less, conform to the following as a minimum:
   1. Wood: Wood screws.
   2. Concrete and solid masonry: Bolts and expansion shields.
   3. Hollow construction: Toggle bolts.
   4. Solid metal: Machine screws in tapped holes or with welded studs.
   5. Steel decking or sub-floor: Fastenings as specified below for applied weights in excess of 100 pounds.

C. Where weight applied to building attachment points exceeds 100 pounds, but is 300 pounds or less, conform to the following as a minimum:
   1. At concrete slabs provide 24-inch by 24-inch by ½-inch steel fishplates on top with through bolts. Fishplate assemblies shall be chased in and grouted flush with the top of slab screed line, where no fill is to be applied.
   2. At steel decking or sub-floor for all fastenings, provide through bolts or threaded rods. The tops of bolts or rods shall be set at least one inch below the top fill screed line and grouted in. Suitable washers shall be used under bolt heads or nuts. In cases where the decking or sub-floor manufacturer produces specialty hangers to work with their decking or sub-floor, such hangers shall be provided.

D. Where weight applied to building attachment points exceeds 300 pounds, coordinate with and obtain the approval of Architect and conform to the following as a minimum:
   1. Provide suitable auxiliary channel or angle iron bridging between building structural steel elements to establish fastening points. Bridging members shall be suitably welded or clamped to building steel. Provide threaded rods or bolts to attach to bridging members.

E. For items, which are shown, as being ceiling-mounted at locations where fastening to the building construction element above is not possible, provide suitable auxiliary channel or angle iron bridging tying to the building structural elements.

DocuSign Envelope ID: 330DEBD6-9A9E-4F34-BDCC-1AC1BAA701E9

F. Wall-mounted equipment may be directly secured to wall by means of steel bolts. Groups or arrays of equipment may be mounted on adequately sized steel angles, channels, or bars. Prefabricated steel channels as manufactured by Kindorf or Unistrut are acceptable.

3.14 IDENTIFICATION

A. Identify electrical equipment with permanently attached black phenolic nameplates with ½-inch high white engraved lettering. Identification shall include equipment name or load served as appropriate. Nameplates for equipment connected to the emergency power system shall be red with white lettering. Nameplates shall be attached with cadmium-plated screws; peel-and-stick tape or glue-on type nameplates are not allowed.

B. Cable tags shall be flameproof secured with flameproof non-metallic cord.

C. Provide an engraved nameplate for each switch controlling loads, which are not local to the switch.

D. Wherever raceways for future use are terminated outside of the building, stake the location with a 2-foot long, 1-inch by 1-inch clear heart redwood stake.

E. See individual Sections for additional identification requirements.

3.15 PROHIBITED LABELS AND IDENTIFICATIONS

A. In all public areas, tenant areas, and similar locations within the project, the inclusion or installation of any equipment or assembly which bears on any exposed surface any name, trademark, or other insignia which is intended to identify the manufacturer, the vendor, or other source(s) from which such object has been obtained, is prohibited, unless otherwise approved by Owner.

B. Required UL labels shall not be removed nor shall identification specifically required under the various technical sections of the Specifications be removed.

3.16 EQUIPMENT PADS AND ANCHOR BOLTS

A. Provide concrete pads under all floor-mounted electrical equipment. Equipment pads shall conform to the shape of the piece of equipment it serves with a minimum 1-inch margin around the equipment and supports. Pads shall be a minimum of 4 inches high and made of a minimum 28 day, 2,500 psi concrete reinforced with 6-inch by 6-inch 6/6 gauge welded wire mesh. Trowel tops and sides of pad to smooth finishes, equal to those of the floors, with all external corners bullnosed to a ¾-inch radius. Shop drawings stamped “NO EXCEPTIONS NOTED” shall be used for dimensional guidance in sizing pads.

B. Provide galvanized anchor bolts for all equipment placed on concrete equipment pads, inertia blocks, or on concrete slabs. Provide bolts of the size and number recommended by the manufacturer of the equipment and locate by means of suitable templates. Equipment installed on vibration isolators shall be secured to the isolator. Secure the isolator to the floor, pad, or support as recommended by the vibration isolation manufacturer.

C. Where equipment is mounted on gypsum board partitions, the mounting screws shall pass through the gypsum board and securely attach to the partition studs. As an alternative, the mounting screws may pass through the gypsum board and be securely attached to 6 inches square, 18 gauge galvanized metal backplates, which are attached to the gypsum board with an approved non-flammable adhesive. Toggle bolts installed in gypsum board partitions are not allowed.

3.17 DELIVERY, DRAYAGE AND HAULING

A. Provide drayage, hauling, hoisting, shoring and placement in the building of equipment specified and be responsible for the timely delivery and installation of equipment as required by the construction schedule. If any item of equipment is received prior to the time that it is required, the Contractor shall be responsible for its proper storage and protection until the time it is required. Pay for all costs of drayage or storage.

B. If equipment is not delivered or installed at the project site in a timely manner as required by the project construction schedule, the Contractor shall be responsible for resulting disassembly, re-

DocuSign Envelope ID: 330DEBD6-9A9E-4F34-BDCC-1AC1BAA701E9

assembly, manufacturer's supervision, shoring, general construction modification, delays, overtime costs, etc., at no additional cost to the Owner.

3.18 EQUIPMENT AND MATERIAL PROTECTION

A. Protect the work, equipment, and material of other trades from damage by work or workmen of this trade, and correct damaged caused without additional cost to the Owner.

B. Take responsibility for work, materials, and equipment until finally inspected, tested and accepted. Protect work against theft, injury, or damage, and carefully store material and equipment received on site, which is not immediately installed. Close open ends of work with temporary covers or plugs during construction to prevent entry of obstructing material. Cover and protect equipment and materials from damage due to water, spray-on fireproofing, construction debris, etc. Store equipment to moisture damage in dry, heated spaces.

C. Provided adequate means for fully protecting finished parts of materials and equipment against damage from whatever cause during the progress of the work until final acceptance. Protect materials and equipment in storage and during construction in such a manner that no finished surfaces will be damaged or marred, and moving parts are kept clean and dry. Do not install damaged items; take immediate steps to obtain replacement or repair.

D. Lighting fixture troffers with parabolic reflectors shall be installed with factory-mounted plastic protective bags around parabolic reflector assembly. Remove protective bag just prior to occupancy.

3.19 TESTING OF ELECTRICAL SYSTEMS

A. Comply with the project construction schedule for the date of final performance and acceptance testing, and complete work sufficiently in advance of the Contract completion date to permit the execution of the testing prior to occupancy and Contract close-out. Complete any adjustments and/or alterations, which the final acceptance tests indicate as necessary for the proper functioning of all equipment prior to the completion date. See individual Sections for extent of testing required.

B. Provide a detailed schedule of completion indicating when each system is to be completed and outlining when field testing will be performed. Submit completion schedule for review within six months after the notice to proceed by Owner's Representative has been given. Update this schedule periodically as the project progresses.

3.20 OPERATING INSTRUCTIONS

A. Provide the services of factory-trained specialists to provide an operating instructions seminar for equipment and systems. The seminar shall be conducted over a five-day (consecutive) period. Instruction time is defined as straight time working hours and does not include nights, weekends, or travel time to and from the project.

B. Submit seminar agenda, schedule and list of representatives to the Owner for approval 30 days prior to suggested date of seminar. Do not commence seminar until the Owner has issued a written acceptance of the starting time and attendees. Confirm attendance of seminar by written notification to participants.

C. Instruct Owner's operating personnel in proper starting sequences, operation, shut-down, general maintenance and preventative maintenance procedures, including normal and emergency procedures.

D. Submit final copies of Record Drawings and Operating and Maintenance Manuals to Owner at seminar.

E. Submit a written record of minutes and attendees of the seminar to the Owner.

3.21 OPERATING AND MAINTENANCE MANUALS

A. Provide Operating and Maintenance Manuals for equipment and materials furnished under this Division.

DocuSign Envelope ID: 330DEBD6-9A9E-4F34-BDCC-1AC1BAA701E9

B. Submit three final copies of Operating and Maintenance Manuals for review at least ten weeks before the completion date. Assemble data in a completely indexed volume or volumes in three-ring binders and identify the size, model, and features indicated for each item. Print the project name on the outside of the binders.

C. Submit one set of CD/DVD containing PDF copy of the complete Operating and Maintenance Manuals.

D. Maintenance manuals shall include complete cleaning and servicing data compiled in a clear and easily understandable format. Show model numbers of each piece of equipment, complete lists of replacement parts, capacity ratings, and actual loads.

E. Provide the following information where applicable:
   1. Identifying name and mark number
   2. Locations (where several similar items are used, provide a list)
   3. Complete nameplate data
   4. Certified Record Drawings and Final Reviewed submittals
   5. Parts list
   6. Performance curves and data
   7. Wiring diagrams
   8. Manufacturer's recommended operating and maintenance instructions with all non-applicable information deleted
   9. List of spare parts recommended for normal service requirements
   10. Assembly and disassembly instructions with exploded-view drawings where necessary
   11. Test reports
   12. Trouble shooting diagnostic instructions, where applicable

3.22 RECORD DRAWINGS

A. The Contractor shall maintain on a daily basis at the Project site a complete set of Record Drawings. The Record Drawings shall initially consist of a set of blueline prints or AutoCAD files of the Contractor's Coordination Drawings. The prints shall be marked or the AutoCAD files electronically updated to show the precise location of all buried or concealed work and equipment, including embedded conduit, raceways and boxes, and all changes and deviations in the Electrical work from that shown on the Contract Documents. This requirement shall not be construed as authorization for the Contractor to make changes in the layout or work without definite written instructions from the Architect or Engineer. The updated Coordination Drawings shall be used to produce the final Record Drawings that shall be delivered to the Owner on electronic media upon Project completion.

B. Record dimensions clearly and accurately to delineate the work as installed. Suitably identify locations of all equipment by at least two dimensions to permanent structures.

C. The Contractor and Subcontractor shall mark all in-progress Record Drawings on the front lower right hand corner with a rubber stamp impression or an AutoCAD image similar to the following:

RECORD DRAWING
(⅜-inch high letters)

To be used for recording Field Deviations and Dimensional Data Only
($^5/_{16}$-inch high letters)

D. Upon completion of the work, the Contractor and Subcontractor(s) shall certify all Record Drawings on the front lower right hand corner adjacent to the above marking with a rubber stamp impression or an AutoCAD image similar to the following:

DocuSign Envelope ID: 330DEBD6-9A9E-4F34-BDCC-1AC1BAA701E9

RECORD DRAWING
CERTIFIED CORRECT
(⅜-inch high letters)

(Printed Name of General Contractor)
($^5/_{16}$-inch high letters)
Date:_____

(Printed Name of Subcontractor)
($^5/_{16}$-inch high letters)
Date:_____

E. Prior to final acceptance of the Work of this Division, the Contractor shall submit properly certified Record Drawings to the Architect and Engineer for review and shall make changes, corrections, or additions as the Architect and/or Engineer may require to the Record Drawings. After the Architect's and Engineer's review, and any required Contractor revisions, the Record Drawings shall be delivered to the Owner on electronic media. The Architect and Engineer do not assume any responsibility for the accuracy or completeness of the Record Drawings.

3.23 FINAL PUNCHLIST

A. Prior to the Final Punchlist, certify that systems and equipment are complete, operational, and are in compliance with the Contract Documents.

B. During the Final Punchlist, provide personnel with access keys, hand held radios, and necessary expertise to operate each system and piece of equipment to demonstrate operational compliance with the Contract Documents.

C. Any deficiencies noted on the Final Punchlist shall be expeditiously corrected and certified in writing.

END OF SECTION

DocuSign Envelope ID: 330DEBD6-9A9E-4F34-BDCC-1AC1BAA701E9

SECTION 99-260502

EQUIPMENT CONNECTIONS AND COORDINATION

PART 1 - GENERAL

1.1 DESCRIPTION

A. Provide equipment connections and coordination in accordance with the Contract Documents.

1.2 SUBMITTALS

A. No requirements.

PART 2 - PRODUCTS

2.1 NOT APPLICABLE

PART 3 - EXECUTION

3.1 GENERAL

A. Provide equipment connections and coordination in accordance with manufacturer's recommendations and product submittals.

B. Provide disconnect switches for equipment. Where equipment requires fuse protection, provide fusible type disconnect switches with fuses rated in accordance with equipment manufacturer's requirements. Disconnect switches for single-phase equipment shall be thermal overload type. Locate disconnect switches in coordination with the layout of equipment. Provide supports for a free-standing installation if required to allow access to disconnect switch and/or proximity to equipment served.

C. Provide final connections to hard-wired equipment with a minimum of two feet of liquid-tight flexible metal conduit.

D. Verify the requirements of cord and plug equipment and provide receptacles, branch circuiting and branch circuit overcurrent protection to match. Receptacle types shown on the Drawings are for bidding purposes only.

E. Where equipment is supplied from conduit run under or within the floor slab, extend conduit to a junction box mounted on a two-foot stub up of rigid steel conduit. Provide suitable bracing on conduit stub up.

F. Where equipment is fed from overhead, support conduit on flanged floor type fitting.

3.2 EQUIPMENT CONNECTION TYPES

A. Provide equipment connection types as indicated on the equipment connection schedule.

B. Equipment Connection Types:

1. Type FR: Fractional horsepower single-phase motor. Provide thermal overload/disconnect switch and motor connection.
2. Type FWS: Equipment furnished with starter. Install starter and provide connection to starter and connection from starter to equipment.
3. Type M: Motor with starter provided under Division 26. Provide disconnect switch and motor connection.
4. Type SPC: Single point connection. Provide single point connection to equipment provided with factory-mounted starter/controller listed for single point power connection. Where required by code or the equipment manufacturer, provide fusible disconnect switch with fuses sized in accordance with equipment nameplate requirements.
5. Type VFD: Variable frequency drive furnished under Division 23. Install VFD and provide connection to VFD and connection from VFD to equipment.

DocuSign Envelope ID: 330DEBD6-9A9E-4F34-BDCC-1AC1BAA701E9

3.3 MECHANICAL EQUIPMENT

A. Provide electrical connections to mechanical equipment.

B. Where motor controllers are furnished by others, install controller and provide connections at line and load side of controllers.

C. Where reduced voltage, multiple speed, duplex, triplex, lead-lag, pony motor or other unusual controller types are utilized, coordinate specific requirements of motor(s) and controller and provide required wiring between motor(s) and controller.

D. For electric water coolers verify whether the equipment is hard wired, cord- and plug-connected and whether a remote chiller is provided. Provide circuiting and connections to match.

3.4 OWNER FURNISHED EQUIPMENT

A. Provide electrical connections to Owner-furnished security and camera equipment.

B. Inspect Owner-furnished equipment for damage, defects, missing components, etc. Report deficiencies to the Owner immediately. Do not install or connect deficient equipment.

C. Provide supports, fastenings, and auxiliary hardware necessary for a complete installation in accordance with the finished building conditions.

END OF SECTION

DocuSign Envelope ID: 330DEBD6-9A9E-4F34-BDCC-1AC1BAA701E9

SECTION 99-260519

600V WIRE AND CABLE

PART 1 - GENERAL

1.1 DESCRIPTION

A. Provide 600V wire and cable in accordance with the Contract Documents.

B. Related work specified in other divisions of these specifications.
   1. Raceways and Boxes

1.2 REFERENCE STANDARDS

A. Rubber Insulated Wire and Cable: ICEA S-19-81, NEMA WC 3, and UL 44.

B. Thermoplastic Insulated Wire and Cable: ICEA S-61-402, NEMA WC 3, and UL 83.

C. Cross-Linked Thermosetting Polyethylene Insulated Wire and Cable: ICEA S-66-524, NEMA WC 7, and UL 44.

D. Service Entrance Cable: UL 854.

E. Annealed Copper Wire for Conductors: ASTM A3.

F. Terminal Blocks: UL 1059.

1.3 QUALITY ASSURANCE

A. Wire and cable shall be of the same manufacturer.

1.4 SUBMITTALS

A. Field test reports.

1.5 FIELD TESTING

A. Inspect splices and terminations and make mechanically and electrically tight during the 15-day period immediately prior to final acceptance of the work.

B. Feeder insulation shall be tested after installation, and before final connection.
   1. Tests shall be performed with a 500 volt megger, and conductors shall test free from short circuits and grounds.
   2. Conductors shall be tested phase-to-phase and phase-to-ground.
   3. Furnish the instruments, materials, and labor required.

C. Demonstration: Subsequent to wire and cable installation and connection, energize circuits and demonstrate functioning in accordance with contract requirements. Correct deficiencies and retest to demonstrate compliance.

PART 2 - PRODUCTS

2.1 ACCEPTABLE MANUFACTURERS

A. Wire and Cable:
   1. Copper: Anaconda, Brand-Rex, Collyer, Cyprus, General Cable, Hatfield, Houston, Kaiser, Kerite, National, Okonite, Simplex, or Triangle.

B. Connectors:
   1. Wire size number 14 through number 6:
      a. Hand applied: Piggy (Thomas & Betts), Scotchlock (3M), or Wing Nut (Ideal).
      b. Tool applied: Burndy HYDENT, or Thomas & Betts Stakon.
   2. Wire size number 4 through number 1:
      a. Tool applied: One-hole compression type, Burndy HYLUG, or Thomas & Betts 54000 Series.

DocuSign Envelope ID: 330DEBD6-9A9E-4F34-BDCC-1AC1BAA701E9

3. Wire size number 1/0 through 1000 MCM:
   a. Tool applied: Two-hole compression type, Burndy HYLUG, or Thomas & Betts 54000 series.

C. Electrical Tape:
1. Insulating type, Johns-Manville or 3M.

2.2 WIRE AND CABLE

A. General:
1. 600V minimum insulating rating.

B. Conductor:
1. Electrical grade, annealed copper, tinned if rubber insulated, and fabricated in accordance with ASTM and ICEA standards. Minimum size number 12 for branch circuits; number 14 for control wiring.
2. Aluminum conductors are not permitted.

C. Stranding and Number of Conductors:
1. Number 12 and larger, stranded ASTM Class B.
2. Control wires stranded in accordance with ASTM Class B stranding designations.
3. Cables for low-voltage systems shall be multi-conductor type unless otherwise noted.

D. Insulation:
1. 600 volts, surface-printed identification, listed per UL 83:
   a. Conductors in control panel enclosures shall be Type MTW.
   b. Conductors in wet, underground, or outdoor locations shall be Type XHHW-2.
   c. All conductors other than Type MTW and XHHW-2 shall be Type THHN.

E. Color Coding:
1. Wiring shall be color coded as follows:

Conductor	120/208V System
Phase A	Black
Phase B	Red
Phase C	Blue
Neutral	White
Ground	Green
Isolated Ground	Green/Yellow Stripe

2. Wire number 8 and smaller shall be factory-color coded the entire length. Wire number 6 and larger shall be color coded by color taping entire length of exposed conductor at all accessible locations or factory-color coded where available.
3. Control wiring shall be color coded in accordance with manufacturer's recommendations.

PART 3 - EXECUTION

3.1 GENERAL

A. Maximum of three branch circuits in one conduit unless otherwise indicated.

B. Provide minimum number 10 wiring for 120-volt branch circuits exceeding 150 feet in length from panelboard to furthest outlet.

C. Do not install wire until raceway systems are complete.

D. Provide cable supports for vertical risers.

E. Wire size shall be uniform for the entire length of the circuit unless noted otherwise.

F. Do not splice feeders or dedicated branch circuits unless otherwise indicated.

G. Make connections, splices, taps, and joints with solderless devices, mechanically and electrically secure. Coat connections with oxide inhibitor and torque to manufacturer's specifications.

H. Label conductors with panel and circuit number at all accessible locations.

DocuSign Envelope ID: 330DEBD6-9A9E-4F34-BDCC-1AC1BAA701E9

I. Lubricate cables to facilitate pulling. Lubrication material shall be inert to cable insulation and raceways.

J. Install compression connectors with hydraulic die, embossing die code into connector. Connect to bus with Bellville type washers for positive pressure over complete contact area. Insulate with heat-shrink tubing.

K. Provide a separate neutral for dimmed branch circuits, ground fault interrupter branch circuits, and branch circuits serving isolated ground and isolated ground surge suppressor type receptacles.

END OF SECTION

DocuSign Envelope ID: 330DEBD6-9A9E-4F34-BDCC-1AC1BAA701E9

SECTION 99-260526

GROUNDING SYSTEM

PART 1 - GENERAL

1.1 DESCRIPTION

A. Provide grounding system in accordance with the Contract Documents.

1.2 QUALITY ASSURANCE

A. Utility company approval of service installation.

1.3 REFERENCE STANDARDS

A. UL 467.
B. ANSI C-1.
C. IEEE 142.
D. NEC.
E. National Electrical Safety Code.
F. Utility company requirements.

1.4 SUBMITTALS

A. Field test report.

1.5 FIELD TESTING

A. Resistance testing of ground rod system indicating maximum 5 ohms resistance to ground.

PART 2 - PRODUCTS

2.1 GENERAL

A. Grounding connections shall be brazed molded exothermic welded, bolted clamp terminal, or pressure connector type.

PART 3 - EXECUTION

3.1 GENERAL

A. Metallic raceways, cable trays, cable armor, cable sheath, enclosures, equipment frames, fittings, and other metallic noncurrent-carrying equipment parts and surfaces shall be effectively bonded to the grounding system. Nonconductive paint, enamel, or similar coating shall be removed at threads and contact surfaces to preserve grounding continuity or fittings shall be provided to make such removal unnecessary.

B. Neutral wiring shall be grounded at the system point of origin only and shall be isolated from downstream grounding systems.

C. Provide an insulated grounding conductor for all segments of branch circuits serving motors controlled by variable frequency drive controllers.

D. Bond interior metal piping systems to the grounding electrode system. Where metallic piping and duct systems are rendered metallically non-continuous by nonconductive couplings, provide bonding jumpers to provide grounding continuity.

E. Receptacles and lighting fixtures shall be grounded to the outlet box by means of a bonding jumper between the outlet box and the receptacle or lighting fixture grounding terminal.

F. Feeders and branch circuits shall be provided with an insulated grounding conductor run with the circuit conductors. This grounding conductor shall be in addition to the ground path provided by

DocuSign Envelope ID: 330DEBD6-9A9E-4F34-BDCC-1AC1BAA701E9

the continuously grounded metallic raceway system that encloses the phase and neutral conductors.

G. Provide bolted clamp terminal connectors where connected to removable equipment.

H. Provide brazed molded exothermic welded connections to ground rods and connections to building structural steel.

END OF SECTION

DocuSign Envelope ID: 330DEBD6-9A9E-4F34-BDCC-1AC1BAA701E9

SECTION 99-260533

RACEWAYS AND BOXES

PART 1 - GENERAL

1.1 DESCRIPTION

A. Provide raceways and boxes in accordance with the Contract Documents.

1.2 SUBMITTALS

A. Conduit, Boxes, Wireways and Auxiliary Gutters:
   1. Manufacturer's product data sheets of system components.

B. Modular Wiring Systems:
   1. Manufacturer's product data sheets of system components.
   2. ⅛-inch scale plans showing layout of lighting fixtures and modular wiring system.

1.3 IDENTIFICATION

A. Mark junction box covers with permanent stencil identification of panelboard and circuit numbers of wiring contained within.

B. Paint fire alarm and fire pump system boxes red.

PART 2 - PRODUCTS

2.1 ACCEPTABLE MANUFACTURERS

A. Conduit and Boxes:
   1. UL Listed and labeled products of any manufacturer meeting the specified performance requirements are acceptable.

B. Modular Wiring System:
   1. Reloc, Dual-Lite, or equal.

C. Wireways and Auxiliary Gutters:
   1. Square D, or equal.
   2. Wireways and auxiliary gutters shall be UL Listed and labeled.

2.2 CONDUIT AND FITTINGS

A. Rigid Steel Conduit:
   1. Rigid conduit, heavy wall, hot-dipped galvanized inside and out, threaded ends.
   2. Rigid steel conduit shall have steel or malleable iron fittings.
   3. Split or three-piece couplings shall be electroplated, malleable cast iron couplings.
   4. Insulated grounding bushings shall be threaded malleable cast iron body with plastic insulated throat and steel, lay in ground lug with compression screw.
   5. Insulated metallic bushings shall be threaded malleable cast iron body with plastic insulated throat.

B. Electrical Metallic Tubing:
   1. Continuous, seamless steel tubing galvanized or sherardized on exterior, coated on interior with smooth hard finish of lacquer, varnish or enamel.
   2. Steel, compression type fittings. Provide concrete type fittings where required.

C. Metal Clad Cable:
   1. Light steel or aluminum armor, copper conductors, insulated copper equipment grounding conductor, and internal marker tape.
   2. Snap-in grounding type insulated throat type fitting.

D. Flexible Steel Conduit:
   1. Single strip, continuous, flexible interlocked double-wrapped steel, hot-dip galvanized inside and out forming smooth internal wiring channel.

DocuSign Envelope ID: 330DEBD6-9A9E-4F34-BDCC-1AC1BAA701E9

2. Steel, compression type fittings.

E. Liquid Tight Flexible Conduit:
1. Same as flexible steel conduit except with tough, inert, watertight plastic outer jacket.
2. Fittings shall be cast malleable iron body and gland nut, cadmium-plated with one-piece brass grounding bushings threaded to interior of conduit. Spiral molded vinyl sealing ring between gland nut and bushing and nylon-insulated throat.

F. PVC Coated Rigid Steel Conduit:
1. Fittings shall be rigid steel conduit coated with PVC or polyethylene.

2.3 MODULAR WIRING SYSTEM

A. Factory pre-assembled connectors and pre-wired cable assemblies to interface with lighting fixtures and lighting switches. UL 498 overload test for connecting or disconnecting under load. UL Listed for use in air handling plenums.

B. Components shall be color coded for voltage class, function keyed, and dead fronted to avoid the possibility of electrical shock. Cables shall be capable of connecting to any fixture connector on respective switching function.

C. Connectors shall be made of injection molded polyester thermoset compound with up to four copper alloyed spade pins or taps for positive contact, two positive locking latches and rated for 20 amps. Provide one multi-purpose flexible connector with two power-out (one un-switched and one switched) and one switchleg connection faces at each lighting fixture female receptacle to allow for switched or un-switched functions. Provide one female receptacle for each lighting fixture. Receptacle shall be capable of rotating 270 degrees to reduce excessive stress that may be caused by the cable assemblies. Receptacles shall be recessed or capable of being mounted in a standard ½-inch knockout allowing for end-mount conversions in the field where necessary.

D. Cable assemblies shall be constructed using a flexible armor jacket with insulated solid 12 gauge copper conductors. Provide a full size insulated grounding conductor in each cable assembly. Each cable assembly shall be supplied with a minimum of two feet of cable more than what is required to connect from fixture to fixture. Quantity of conductors in each cable assembly shall be as required.

E. Distribution junction boxes shall contain up to four receptacles mounted in a UL Listed enclosure. Provide with external flanges for mounting to building structure.

2.4 WIREWAYS AND AUXILIARY GUTTERS

A. Sizes and shapes as indicated and/or as required.

B. Provide necessary elbows, tees, connectors, adapters, etc.

C. Continuous removable cover secured with screws and keyhole slots. Hinged cover where installed above suspended ceiling.

D. Provide wire retainers at not greater than 12 inches on center.

2.5 OUTLET, JUNCTION, AND PULL BOXES

A. Cast Type Boxes:
1. Ferrous alloy box with inside threaded hubs for rigid steel conduit.
2. Aluminum box with threaded hubs for rigid aluminum conduit.
3. Ferrous alloy box with compression or inside threaded hubs with adapter for electrical metallic tubing.
4. Cast raised cover, size matched to contour of box.
5. Tapered threads for hubs.

B. Galvanized Pressed Steel Type Boxes:
1. General:
   a. Pressed steel, galvanized or cadmium-plated, 4 inches minimum octagonal or square with galvanized cover or extension ring as required.

DocuSign Envelope ID: 330DEBD6-9A9E-4F34-BDCC-1AC1BAA701E9

2. Concrete Box:
   a. 4 inches minimum octagonal with removable backplate. Depth of box shall allow for minimum of 1 inch of concrete to be poured around the backplate.
3. Lighting Fixture Box:
   a. 4 inches minimum octagon.
   b. Where fixtures are mounted on or in an accessible type ceiling and a modular wiring system is not used, provide a junction box and extend flexible steel conduit to each fixture.
4. Provide ⅜-inch no-bolt fixture studs where required.

C. Sheet Steel Boxes:
1. No. 12 gauge sheet steel for boxes with maximum side less than 40 inches, and maximum area not exceeding 1,000 square inches; riveted or welded ¾-inch flanges at exterior corners.
2. No. 10 gauge sheet steel for boxes with maximum side 40 to 60 inches, and maximum area 1,000 to 1,500 square inches; riveted or welded ¾-inch flanges at exterior corners.
3. No. 10 gauge sheet steel riveted or welded to 1.5 inch by 1.5 inch by ¼-inch welded angle iron framework for boxes with maximum side exceeding 60 inches and more than 1,500 square inches in area.
4. Covers:
   a. Same gauge steel as box.
   b. Subdivided single covers so no section of cover exceeds 50 pounds.
   c. Machine bolts or machine screws threaded into tapped holes.
5. Paint:
   a. Rust inhibiting primer, ANSI 61 grey enamel finish coat.

2.6 ELECTRICAL BOX PADS

A. Non-Fire Rated: equal to Lowry's Outlet Box Pads as manufactured by Harry A. Lowry Associates, Sun Valley, California.

B. Fire Rated: equal to Putty Pads manufactured by Specified Technologies, Inc.

PART 3 - EXECUTION

3.1 GENERAL

A. Provide raceways for all systems. Minimum conduit size shall be ½-inch. No wiring shall be installed without a raceway. All electrical and communication wiring shall be installed in conduit.

B. Protect metallic raceway in earth or fill from corrosion with two coats of corrosion-resistant paint or tape wrap.

C. Elbows for conduit installed below grade or embedded within floor slabs shall be PVC coated rigid steel conduit.

D. Tie embedded raceways securely in place prior to concrete placement. Raceways installed below or within floor slabs shall extend a minimum of 4 inches above the finished slab or housekeeping pad to the first connector. Install capped bushings on conduit stub ups.

E. Locate raceways so that the integrity of structural members is not affected and they do not conflict with the services of other trades. Draw up couplings and fittings full and tight. Protect threads from corrosion after installation with zinc chromate or equivalent protection.

F. Conceal raceways except at surface-mounted cabinets and freestanding equipment. Install minimum of 6 inches from flues, steam pipes, or other heated lines. Provide flashing and counter-flashing for waterproofing of raceways which penetrate the roof. Install power raceways a minimum of 24 inches from telecommunications raceways, cross at 90-degree angle. Route exposed raceways and raceways above suspended ceilings parallel or perpendicular to building lines with right-angle turns and symmetrical bends. Provide sleeves in concrete walls, floor slabs and partitions. Waterproof sleeved raceways where required.

DocuSign Envelope ID: 330DEBD6-9A9E-4F34-BDCC-1AC1BAA701E9

G. Provide raceway expansion joints for exposed and concealed raceways at expansion joints and between structures to compensate for differential movement. Provide bonding conductor.

H. Provide one empty ¾-inch raceway for each three spare unused poles or spaces of flush-mounted panelboards. Terminate conduit in an accessible location for future extension.

I. Provide raceways with appropriate seal-offs, explosion-proof fittings, etc. in special occupancy areas as required. Provide conduit seal-offs where portions of an interior raceway system pass through walls, ceilings or floors which separate adjacent rooms having substantially different maintained temperatures, refrigeration, or cold storage rooms.

J. Provide pull cord in empty raceways. Tag both ends noting destination.

K. Clear raceway of all obstructions and dirt prior to pulling in wires or cables. Use ball mandrel (diameter approximately 85 percent of conduit insider diameter) followed by close-fitting wire brush and wad of felt or similar material. This assembly may be pulled with, but ahead of cable being installed. Clean empty raceways similarly. Clear or replace any raceway which rejects ball mandrel.

L. Install exterior underground conduits 24 inches minimum below finished grade. Do not penetrate waterproof membranes unless proper seal is provided.

M. Secure raceways clamps or supports to masonry materials with toggle bolts, expansion bolts, or steel inserts. Install raceway on steel construction with approved clamps which do not depend on friction or set-screw pressure alone.

N. Provide independent support of raceways larger than ¾ inch. Provide uni-strut support and threaded rod to structure above for multiple suspended raceways run together. Use of lathe channels or other miscellaneous steel to support raceways is not permitted. Use listed supports such as uni-strut or similar systems for support.

O. Raceways Embedded in Floor Slabs:
   1. Raceways shall not be installed in slab without the approval of the Structural Engineer.
   2. Raceways shall not interfere with placement of floor slab reinforcement components.
   3. Install raceways between the upper and the lower layers of reinforcing steel.
   4. Space raceways not less than 8 inches on centers except where they converge at panels or junction boxes.
   5. Raceways running parallel to slabs supports, such as beams, columns and structural walls, shall be installed not less than 12 inches from such supporting elements.

P. Non-Metallic Raceway Installations:
   1. Joints shall be made using the material recommended by the raceway manufacturer. Components shall be cleaned prior to assembly.
   2. Raceway cutoffs shall be square and shall not deform conduit. Ream rough surfaces.
   3. Provide male box adapters to terminate raceways.
   4. Where separable terminations are required, provide PVC threaded adapters with locknuts or bushings. Provide “O” rings for watertight installations.
   5. Bends shall be made by methods that do not deform or damage the conduit.
   6. Provide expansion fittings where required.
   7. Raceway supports shall be installed to allow the non-metallic conduit to slide through the supports.
   8. Non-metallic raceway is not permitted within the building.

Q. Raceways above Suspended Ceilings:
   1. Single runs of ½-inch or ¾-inch raceways may be supported from ceiling support wires where permitted by the rating of the ceiling system.
   2. Provide independent support of raceways larger than ¾ inch. Provide independent support of multiple raceways (more than one). Provide uni-strut support and threaded rod to structure above. Attachment to ceiling support wires is not permitted.
   3. Provide independent support of raceways installed above fire-rated ceilings. Attachment to ceiling support wires is not permitted.
   4. Install conduit 1 foot-0 inch minimum above top of ceiling.

R. Underground Duct Banks:

DocuSign Envelope ID: 330DEBD6-9A9E-4F34-BDCC-1AC1BAA701E9

1. Provide underground duct banks as indicated. Provide concrete encasement of power systems duct banks except where duct banks run beneath building slab on grade. Provide concrete encasement of duct bank elbows for all systems. Provide steel reinforcing bars for concrete-encased duct banks. Provide spacers to permit concrete to completely surround and encase each conduit. Concrete strength shall be 3,000 pounds per square inch minimum. Provide red dye inhibiting agent in concrete mix.
2. Pitch conduit down and away where duct bank enters the building or equipment.
3. Support raceways installed in duct banks every five feet to assure correct alignment prior to placing concrete.
4. Terminate raceways with flared end bells. Clear raceway terminations of burrs and rough edges.

S. Conduit connected to rotating or vibrating equipment shall be flexible metal conduit or liquid-tight flexible conduit.

T. Raceways and fittings installed in hazardous (classified) locations shall conform to NEC Article 500 requirements for the associated Class and Division.

U. Exposed conduit shall be installed parallel and at right angles to the building lines.

V. All raceway systems run on the I-beams and vertical columns shall be secured using fasteners, clamps and hangers without drilling holes on the structure.

3.2 MODULAR WIRING SYSTEM

A. Provide distribution boxes where transitions are made from fixed raceways to the modular wiring system. Label distribution junction box with panelboard and circuit numbers.

B. Cable assemblies shall be connected horizontally to multi-purpose connectors. Support cable assemblies at intervals not to exceed 4 feet-6 inches on center or closer if required. Provide dust caps on unused connector faces.

3.3 WIREWAYS AND AUXILIARY GUTTERS

A. Install wireways above suspended ceilings such that cover will hinge upward from side.

B. Provide 12 inches clear from wireway cover when in open position.

3.4 OUTLET, JUNCTION, AND PULL BOXES

A. Provide outlet, junction, and pull boxes as indicated and as required for a complete installation and to facilitate proper pulling of wires and cables. Boxes shall be sized per electrical code as minimum. Plug open knock outs.

B. The exact location of outlets and equipment is governed by field conditions. Where necessary, relocate outlets so that fixtures and equipment are symmetrically located in accordance with the room layout and will not interfere with other work or equipment. Verify final location of outlets, fixtures, and equipment with Architect.

C. Back-to-back outlets in the same wall, or “through-wall” type boxes are not permitted. Provide 12-inch minimum spacing for outlets shown on opposite side of a common wall. Provide acoustical potting compound (Electrical Box Pads) on outlet boxes installed in condominiums, guest rooms, private offices, conference rooms and in all sound-insulated drywall partitions. Install box pads on the outside of the box and fill all holes.

D. Fit outlet boxes in finished ceilings or wall with appropriate covers, set flush with the finished surface. Where more than one switch or device is located at one point, use multiple gang boxes and covers. Provide tile box or a 4-inch square box with tile ring in masonry walls not plastered or furred. Where drywall material is utilized, provide plaster ring. Provide outlet boxes of type and size suitable for the specific application. Provide barriers where required for voltage or systems separation.

E. Provide pull boxes so that an individual run of conduit does not contain more than the equivalent of four 90-degree bends (360 degrees total).

DocuSign Envelope ID: 330DEBD6-9A9E-4F34-BDCC-1AC1BAA701E9

F. Boxes recessed in walls or ceilings with a surface of concrete, tile, gypsum, plaster, or other non-combustible material shall be installed so that the front edge of the box shall not be set back from the finished surfaces more than ¼ inch. Boxes recessed in walls and ceiling constructed of wood or other combustible surface material shall be flush with the finished surface.

G. Where boxes are installed in plaster, drywall, or plasterboard surfaces with cut openings for box installation, the cut openings shall be repaired so there shall be no gaps or open spaces greater than ⅛ inch at the edge of the box or fitting.

3.5 APPLICATION OF RACEWAYS

A. Rigid Steel Conduit:
   1. Where exposed to physical damage.
   2. Indoors where exposed to moisture.
   3. Where required by code.
   4. Exposed indoor installations within ten feet above finished floor.
   5. Exposed outdoor installations.

B. Electrical Metallic Tubing:
   1. General purpose feeders and branch circuits, except where another conduit type is specifically required.
   2. Exposed indoor installations in branch electrical closets and telecommunications rooms below ten feet above finished floor.

C. Metal Clad Cable:
   1. Use in dry locations concealed above suspended ceilings or within hollow partitions for lighting and receptacle branch circuits (not permitted for circuit home runs).

D. Flexible Steel Conduit:
   1. Dry locations only.
   2. Connections to lighting fixtures in suspended ceilings.
   3. Connections to equipment installed in suspended ceilings.
   4. Transformer connections.
   5. Connections to equipment where vibration isolation is needed.
   6. Maximum length shall be six feet.

E. Liquid-Tight Flexible Steel Conduit:
   1. Same as flexible steel conduit in damp or wet locations.
   2. Motor connections.

F. PVC Coated Rigid Steel Conduit:
   1. Embedded in floor slabs or concrete walls.
   2. Underground duct banks.
   3. Below slab on grade.

G. Modular Wiring System:
   1. Non-emergency lighting system connection in accessible ceiling locations.

H. Wireways and Auxiliary Gutters:
   1. Where indicated.
   2. Above and below panelboards, lighting relay cabinets, fire alarm panels, and terminal cabinets to accommodate large concentrations of wires.

3.6 APPLICATION OF BOXES OUTLET, JUNCTION AND PULL BOXES

A. Cast Type Boxes:
   1. Where connected to rigid steel, intermediate metal, rigid aluminum conduit and liquid-tight flexible conduit, 1.25 inches and smaller.
   2. Exposed conduit installations within ten feet above finished floor.
   3. Where exposed to moisture and outdoors.

B. Galvanized Pressed Steel Type Boxes:
   1. Where connected to electrical metallic tubing and flexible steel conduit, 1.25 inches and smaller.

DocuSign Envelope ID: 330DEBD6-9A9E-4F34-BDCC-1AC1BAA701E9

2. Dry locations.
3. Where concealed in walls and above suspended ceilings.

C. Sheet Steel Boxes:
1. Where connected to conduit larger than 1.25 inches.

END OF SECTION

DocuSign Envelope ID: 330DEBD6-9A9E-4F34-BDCC-1AC1BAA701E9

SECTION 99-260926

PROGRAMMABLE LIGHTING CONTROL SYSTEM

PART 1 - GENERAL

1.1 DESCRIPTION

A. Provide programmable lighting control system in accordance with the Contract Documents.

B. The programmable lighting control system shall be a stand-alone system operating independently of other control systems. The system shall be the distributed processing type, allowing each lighting relay cabinet to function as an independent programmable lighting control system.

1.2 QUALITY ASSURANCE

A. Manufacturer and equipment supplier shall have a minimum of five years prior experience.

B. Components and assemblies shall be factory pre-tested and burned in prior to installation.

C. Factory-trained technicians and applications engineers shall be available to provide initial programming, field testing, system start up, training and operation assistance.

D. Equipment shall be certified for use in the State of California and shall meet the California energy code.

1.3 REFERENCE STANDARDS

A. Lighting Relay Cabinets: UL 916.

B. Emissions Standard: FCC Part 15, Subpart J, Class A.

1.4 SUBMITTALS

A. Manufacturer's product data sheets.

B. Riser diagram showing lighting relay cabinets, control devices, PC interface equipment, and interconnecting conduit and wire.

C. Wiring diagram for each type of control device.

D. Detailed project-specific narrative system sequence of operation.

E. Lighting relay cabinet schedules indicating relay number, system address, branch circuit panelboard and circuit number, control device, and specific description of load controlled.

F. System Title 24 compliance certification documentation: Provide with product submittal for review.

G. Post-installation: All applicable and required Title 24 Certificate of Installation and Certificate of Acceptance forms, including but not limited to: NRCI-LTI-01-E, NRCI-LTI-02-E, NRCI-LTI-03-E, NRCI-LTI-04-E, NRCI-LTI-05-E, NRCI-LTI-06-E, NRCI-LTO-01-E, NRCI-LTO-02-E, NRCI-LTS-01-E, NRCA-LTI-02-A, NRCA-LTI-03-A, NRCA-LTI-04-A, and NRCA-LTO-02-A.

H. Operating and Maintenance Manual, per Electrical General Provisions specification section.

1.5 FIELD TESTING

A. Wiring shall be inspected and tested for continuity and short circuits.

B. Field Test Reports:

1. Certification that equipment has been properly installed and programmed and is in satisfactory operating condition.
2. Detailed operational test report in matrix form indicating each relay, dimming zone, manual control device, and automatic control device. Report shall certify the following:
   a. Successful operation of each relay.
   b. Successful operation of each dimming zone.
   c. Successful operation of each manual control device.
   d. Successful operation of each automatic control device.
   e. Successful operation of automatic control sequences.

DocuSign Envelope ID: 330DEBD6-9A9E-4F34-BDCC-1AC1BAA701E9

3. Submit all applicable and required Title 24 Installation and Acceptance forms to show compliance.

1.6 IDENTIFICATION

A. Provide an identification nameplate for each lighting relay cabinet.

B. Provide a directory card in each lighting relay cabinet indicating relay number, system address, branch circuit panelboard and circuit number, and specific descriptions of loads controlled.

1.7 OPERATION

A. The lighting relay cabinets shall switch relays ON and OFF in response to commands initiated from control devices, user-defined time of day schedules, and commands from the hand-held controller. Switch input control devices shall be capable of providing ON only, ON/OFF, and ON/OFF with time override (for OFF of a 2- to 999-minute delay should switch be left ON) control actions.

B. Time of day schedules shall be developed within logic circuits of each lighting relay cabinet. Each lighting relay cabinet shall have capacity for nine separate daily schedules, including one holiday schedule. Weekly schedules and twenty holidays shall be developed from combinations of the daily schedules, up to one year in advance. Schedules shall contain provisions for daylight savings time and leap year adjustment.

C. Prior to turning off lights from any time-based command, the lighting relay cabinet shall momentarily “flash” lights signaling occupants to initiate an override command. Time interval before turning off shall be programmable from one to nine minutes or “flash” may be disabled.

D. The hand-held controller shall be used to set operating schedules, review status of any relay, define switch functions, change a relays status (ON or OFF) and perform systems diagnostics. Prompt messages shall be provided at each step on the LCD screen.

E. Off sweep function to line voltage shut-off switches shall open and close relays serving associated branch circuits for the time interval required by the line voltage shut-off switch.

F. Exterior lighting shall automatically turn on in response to exterior photocell and automatically turn off in response to preprogrammed schedule.

1.8 WARRANTY

A. Provide a two-year system warranty.

PART 2 - PRODUCTS

2.1 ACCEPTABLE MANUFACTURERS

A. System: WattStopper, GE TLC, LC&D, Leviton/Macro, or Hubbell Automation.

2.2 LIGHTING RELAY CABINETS

A. General:
   1. Relays and logic circuits shall utilize quick connectors on factory wiring to facilitate replacement.
   2. Logic functions, schedules, and switch definitions shall be protected from loss of power for periods of up to ten years.
   3. Each lighting relay cabinet shall have an RJ11 receptacle for connection of a portable hand-held controller for schedule and switch definition.

B. Enclosure:
   1. NEMA 1, surface wall-mounted steel enclosure, finish coated with ANSI 61 grey enamel over a rust inhibitor.
   2. Enclosure faceplate shall be secured to the enclosure with captive screws. Provide a hinged, locking door for access to the low-voltage compartment.
   3. Low-voltage compartment shall be physically separated from two line voltage wiring areas by steel barriers.

DocuSign Envelope ID: 330DEBD6-9A9E-4F34-BDCC-1AC1BAA701E9

C. Relays:
   1. Provide relays in quantities indicated on the lighting relay cabinet schedules.
   2. Each relay shall have a single set of contacts rated for 20 amps at 120 VAC or 277 VAC, tungsten and ballast rated. Coil shall be 24 volts, mechanically or electrically held.
   3. Each relay shall have an LED indicator to display ON/OFF status of each relay.

D. Switch Inputs:
   1. Provide a programmable low-voltage switch input for each relay. Half of the switch inputs shall be two-wire type and half of the switch inputs shall be the universal type.
   2. Two-wire switch inputs shall accommodate two-wire maintained contact (SPST) low-voltage switching devices or two-wire momentary contact (push ON/push OFF) low-voltage switching devices.
   3. Universal switch inputs shall be the same as two-wire switch inputs and in addition shall accommodate three-wire momentary contact low-voltage switching devices.

E. Hand-Held Controller:
   1. 16 key, environmentally sealed keypad.
   2. 4 line, 20 characters per line liquid crystal display.
   3. 6-foot control cord with RJ11 connector.
   4. Magnetic mounting strips on rear.
   5. Provide two hand-held controllers (one as spare).

2.3 CONTROL DEVICES

A. Low-Voltage Wall Switch:
   1. Similar in appearance to lighting switches specified under Section 99-262726.
   2. Two-wire maintained contact type.
   3. Three-wire momentary contact type where multiple location is indicated.

B. Photocell:
   1. Interior or exterior weatherproof type for automatic ON/OFF control of lighting fixtures in response to ambient lighting levels.
   2. Adjustable time delay and foot-candle level setpoints.
   3. Interior type shall include separate ON and OFF setpoints to prevent control from toggling inadvertently as the sensor passes through the control threshold.

C. Occupancy Sensors:
   1. As specified under Section 99-262726. Occupancy sensors shall be of the same manufacturer.

PART 3 - EXECUTION

3.1 GENERAL

A. Connect each lighting relay cabinet to the normal power supply.

B. Provide an exterior photocell in suitable location on roof facing north sky.

3.2 INITIAL PROGRAMMING

A. Provide initial programming of system including assignment of relays to low-voltage switching devices and assignment of relays to automatic schedules prior to system start-up and training. Time of day schedules shall be established by the Owner.

3.3 SYSTEM START-UP

A. Provide qualified technicians to confirm proper installation and operation of system components after initial programming and prior to training.

3.4 TRAINING

A. Provide a minimum of three days of on-site training and instruction to the building's operating personnel by qualified application engineers. Include the instructor's cost of travel and subsistence.

DocuSign Envelope ID: 330DEBD6-9A9E-4F34-BDCC-1AC1BAA701E9

3.5 OPERATION ASSISTANCE

A. Factory telephone support shall be available at no cost to the Owner for the duration of the warranty period. Factory assistance shall consist of solving programming or application questions concerning the control equipment. The manufacturer shall be capable of trouble shooting the software aspects of the system from a factory location via modem.

END OF SECTION

DocuSign Envelope ID: 330DEBD6-9A9E-4F34-BDCC-1AC1BAA701E9

SECTION 99-262416

PANELBOARDS

PART 1 - GENERAL

1.1 DESCRIPTION

A. Provide panelboards in accordance with the Contract Documents.

B. Panelboards include both branch panelboards and distribution panels.

1.2 QUALITY ASSURANCE

A. Panelboard interrupting capacities shall be fully rated.

1.3 REFERENCE STANDARDS

A. Panelboards:
   1. NEMA PB-1
   2. Federal Specification W-P-115A Type II, Class 1
   3. UL 50 and 67

B. Circuit Breakers:
   1. NEMA AB-1
   2. Federal Specification W-C-375a and W-C-375b
   3. UL 489

C. Fusible Switches:
   1. Federal Specifications W-S-865c
   2. UL98

1.4 SUBMITTALS

A. General:
   1. Manufacturer's product data sheets, electrical ratings, and installation instructions.
   2. Support locations and types.

B. Branch Panelboards:
   1. Detailed description and layout of each panelboard, showing physical dimensions, circuit breaker ratings and layout, identification nameplate, and cable lugs.

C. Distribution Panels:
   1. Dimensioned layout and elevation drawings showing physical dimensions and housekeeping pads.
   2. Detailed description and layout of each distribution panel, showing overcurrent protection device ratings and layout, identification nameplate, and cable lugs, and fuse clip sizes.

D. Seismic restraint calculations.

1.5 IDENTIFICATION

A. Provide an identification nameplate for each panelboard, each main, and each feeder overcurrent protection device.

B. Provide a typewritten directory card indicating load served by type and location for each branch circuit in each branch panelboard. Mount directory in frame on inside of branch panelboard door.

C. Current ratings of overcurrent protection devices shall be displayed on the device.

PART 2 - PRODUCTS

2.1 ACCEPTABLE MANUFACTURERS

A. Cutler Hammer, General Electric, Siemens, Square D, or equal.

DocuSign Envelope ID: 330DEBD6-9A9E-4F34-BDCC-1AC1BAA701E9

B. Note that equipment layouts are based upon General Electric equipment. If alternate manufacturer is selected, it is the Contractor's responsibility to confirm equipment fits within the spaces provided.

2.2 RATINGS

A. Panelboards shall be of the ratings and configurations shown on the Drawings.

B. Panelboards and overcurrent protection devices shall have a minimum short circuit rating as specified herein or greater where indicated on the Drawings.

C. Branch Panelboards:
   1. Branch panelboards are identified as shown on the Drawings.
   2. Maximum allowable physical dimensions: 22 inches wide by 6 inches deep.
   3. Branch panelboards: 10,000 RMS symmetrical amperes minimum interrupting capacity.

2.3 CONSTRUCTION

A. Enclosures shall be corrosion resistant galvanized (zinc finished) sheet steel. Fronts shall be cold rolled steel, finish coated with ANSI 61 gray enamel over a rust inhibitor. Panel locks shall be keyed alike. Recessed flush-mounted panels shall have overlapping front.

B. Doors for branch panelboards shall be one-piece bolt-on front with a lockable hinged door over the overcurrent protection devices.

C. Space for future devices shall include all necessary bus supports, and connections.

2.4 BUS SYSTEM

A. Bus bars shall be sequence phased, rigidly supported by high-impact resistant, insulated supporting bus assemblies to prevent vibration and resulting damage when subjected to stress, vibration, or short circuits. Solderless terminations shall be suitable for either copper or aluminum wire or cable.

B. Bus bars shall be of the ampere rating shown on the Drawings. Bus bars shall be plated copper sized in accordance with UL standards to limit temperature rise on any current-carrying part to a maximum of 65 degrees C above an ambient of 40 degrees C maximum.

C. Neutral bus shall be full size. Neutral bus shall be 200 percent rated when supplied from an oversized neutral conductor. Neutral bus shall be capable of terminating one conductor per pole position minimum.

D. Provide a copper equipment ground bus in each panelboard. In addition to the equipment ground bus, provide a copper isolated ground bus when supplied from a feeder that includes an isolated grounding conductor. Each ground bus shall be capable of terminating one conductor per pole position minimum.

2.5 OVERCURRENT PROTECTION DEVICES

A. Overcurrent Protection Device Types:
   1. Branch panelboards: Molded case circuit breakers.

B. Molded Case Circuit Breakers:
   1. Completely sealed enclosure. Toggle type operating handle. Trip ampere rating and ON/OFF indication clearly visible.
   2. Bolt-on type. Plug-in type are not permitted.
   3. Thermal-magnetic trip-free, trip-indicating, quick-make, quick-break, with inverse time characteristic. Single-handle and common tripping on multi-pole breakers. External handle shall be suitable for locking in the OFF position.
   4. Silver alloy contacts with auxiliary arc-quenching devices.
   5. Breakers for lighting circuits shall be SWD rated.
   6. Breakers for mechanical equipment shall be HACR rated.
   7. Provide main breakers in panelboards served from transformers.
   8. Shunt-trip breakers shall be supplied with 120V AC coils.

C. Fusible Switch Units:

DocuSign Envelope ID: 330DEBD6-9A9E-4F34-BDCC-1AC1BAA701E9

1. Quick-make, quick-break, dead-front type. Each switch shall be a self-contained unit, externally operated from the front.
2. Defeatable interlock to prevent opening the door when the switch is in the ON position.
3. Switches shall be equipped with rejection type clips suitable for UL Class R fuses up to 600A, suitable for UL Class L fuses above 600A.
4. Handle shall be capable of being padlocked in the OFF position.

PART 3 - EXECUTION

3.1 INSTALLATION

A. Mount panelboards 6 feet above finished floor to top unless otherwise noted.

B. Connect feed-through panels to main feeder by insulated parallel gutter taps (O.Z. Electrical Manufacturing Company Type PMX or PMX-C).

C. Where panelboards are mounted recessed flush in wall, maintain fire integrity of wall. Provide one empty ¾-inch EMT conduit stubbed up into nearest accessible ceiling location for every three spare or space positions.

D. Neatly arrange wiring and tie together in each gutter with Thomas & Betts nylon Ty-Raps or equal at minimum 4-inch intervals.

E. Provide plugs on open knockouts.

F. Where multiwire branch circuits are allowed, provide identified handle ties in accordance with Code for each grouping of single pole circuit breakers supplying the multiwire branch circuit.

3.2 TOUCH UP AND CLEANING

A. Backboxes shall be clean, dry, and free of construction debris and fireproofing overspray prior to installation of panelboard interior.

B. Vacuum backboxes clean of debris after installation and wiring of branch circuits.

C. Repair and touch up paint damaged surfaces.

END OF SECTION

DocuSign Envelope ID: 330DEBD6-9A9E-4F34-BDCC-1AC1BAA701E9

SECTION 99-262726

WIRING DEVICES

PART 1 - GENERAL

1.1 DESCRIPTION

A. Provide wiring devices in accordance with the Contract Documents.

1.2 QUALITY ASSURANCE

A. Switches, receptacles and wallplates shall be of the same manufacturer.

B. Occupancy sensors shall be certified for operation with specific ballasts utilized in controlled lighting fixtures.

C. Occupancy sensors shall have a minimum three-year warranty.

D. Equipment shall be certified for use in the State of California and shall meet the California Energy Code and local energy ordinances.

E. Coordinate service fittings with electrified furniture system supplier.

F. Floor boxes shall comply with UL scrub water tests for carpet, wood and tile floors.

1.3 REFERENCE STANDARDS

A. Switches: Federal Specification WS-896E.

B. Receptacles: Federal Specification WC-596D, NEMA WD-1, and UL 498.

C. Ground Fault Circuit Interrupter Receptacles: UL 943 Class A.

D. Wall Dimmers: ANSI C62.41, UL 20.

E. Electrified furniture system supplier's requirements.

1.4 SUBMITTALS

A. Manufacturer's product data sheets.

B. Occupancy sensor layout drawings, $^{1}/_{16}$-inch scale, including interwiring of switchpacks and control devices.

C. Occupancy sensor Title 24 2013 compliance certification documentation; provide with product submittals for review.

D. Post-installation: All applicable and required Title 24 Certificate of Installation and Certificate of Acceptance forms, including but not limited to: NRCI-LTI-01-E, NRCI-LTI-02-E, NRCI-LTI-03-E, NRCI-LTI-04-E, NRCI-LTI-05-E, NRCI-LTI-06-E, NRCI-LTO-01-E, NRCI-LTO-02-E, NRCI-LTS-01-E, NRCA-LTI-02-A, NRCA-LTI-03-A, NRCA-LTI-04-A, and NRCA-LTO-02-A.

E. Submit samples as requested by Architect of coverplates and devices for color selection.

1.5 FIELD TESTING

A. Lighting Controls Acceptance Testing: Provide acceptance testing for all occupancy sensors and daylight reduction switches as required for completion of Title 24 acceptance forms.

1.6 COLORS

A. Device and coverplate colors shall be as selected by Architect. Catalog numbers, where included in this Specification, are not to be used to determine colors of devices and coverplates.

PART 2 - PRODUCTS

2.1 ACCEPTABLE MANUFACTURERS

A. Catalog numbers shall not be used to determine colors of devices and coverplates. Catalog numbers are used to establish minimum acceptable standard.

DocuSign Envelope ID: 330DEBD6-9A9E-4F34-BDCC-1AC1BAA701E9

B. Switches and Receptacles: Cooper, Hubbell, Leviton, or Pass & Seymour.
C. Wall Dimmers: Leviton or Lutron.
D. Occupancy Sensors: Hubbell Automation/Mytech, Leviton, Novitas, or Watt Stopper.
E. Plugstrip and Surface Raceways: Wiremold or Hubbell.

2.2 SWITCHES

A. General:
   1. Switches shall be of the type indicated on the Drawings.
   2. Switches shall be commercial specification grade, 20A, 120/277V, 1HP rated at 120V, 2HP rated at 240V, back- and side-wired, silent handle operation.
B. Lighting Switches:
   1. Rocker handle type:
      a. Single pole: Leviton Decora 5621-2; Hubbell HBL2121; Cooper 7621
      b. Double pole: Leviton Decora 5622-2; Hubbell HBL2122; Cooper 7622
      c. 3 way: Leviton Decora 5623-2; Hubbell HBL2123; Cooper 7623
      d. 4 way: Leviton Decora 5624-2; Hubbell HBL2124; Cooper 7624
C. Illuminated Handle Switches:
   1. Rocker handle type:
      a. Single pole: Leviton Decora 5631; Hubbell HBL2121-IL; Cooper 7631
      b. 3 way: Leviton Decora 5633; Hubbell HBL2123-IL; Cooper 7633
D. Transfer Fan Switches:
   1. Rocker handle type, single pole: Leviton Decora 5601-2 engraved FAN, or equivalent by Cooper, Hubbell, or Pass & Seymour.
E. Pilot Light Switches:
   1. Toggle handle, single pole, neon pilot light: Leviton 5226; Hubbell HBL1221-PL; Cooper 2221-PL
F. Key Switches:
   1. Single pole: Leviton 1221-2L; Hubbell 1221-L; Cooper 2221L
G. Weatherproof Switches:
   1. Weatherproof handle/coverplate.
H. Electronic or Digital Timer Switches:
   1. Five button time interval: 5, 10, 15 and 30 minutes plus OFF button.
   2. Ratings:
      a. 1000W, 120VAC, incandescent
      b. 20A, 120VAC, inductive
      c. 1HP, 120VAC, motor
   3. Hubbell DT1277W series or Leviton Decora 6230M series.

2.3 RECEPTACLES

A. General:
   1. Receptacles shall be of the type indicated on the Drawings.
   2. Receptacles shall be commercial specification grade, 125V, grounding type, back- and side-wired.
   3. Receptacles shall have a single piece, heavy duty brass ground contact and mounting strap.
   4. Receptacles shall have a nylon face and heat resistant base.
B. Receptacles:
   1. Designer style single, 15A: Leviton Decora 16251; Hubbell RRD151; Cooper 6350
   2. Designer style duplex, 15A: Leviton Decora 16252; Hubbell HBL2152; Cooper 6262
   3. Designer style duplex, 20A: Leviton Decora 16352; Hubbell HBL2162; Cooper 6362
C. Isolated Ground Receptacles:
   1. Single, 15A: Leviton 5261-IG; Hubbell IG5261; Cooper IG5261
   2. Duplex, 15A: Leviton 5262-IG; Hubbell IG5252; Cooper IG5262

DocuSign Envelope ID: 330DEBD6-9A9E-4F34-BDCC-1AC1BAA701E9

3. Duplex, 20A: Leviton 5362-IG; Hubbell IG5352; Cooper IG5362
4. Designer style duplex, 15A: Leviton Decora 16252-IG; Hubbell IG2152; Cooper IG8262RN
5. Designer style duplex, 20A: Leviton Decora 16352-IG Hubbell IG2162; Cooper IG8362RN

D. Ground Fault Circuit Interrupter Receptacles:
1. Duplex, 15A: Leviton 8598; Hubbell LED GFR 5252; Cooper VGF15
2. Duplex, 20A: Leviton 8898-HG; Hubbell LED GFR 5352; Cooper VGF20

E. Special Purpose Receptacles: Rating as indicated on the Drawings.

F. Clock Receptacles:
1. Simplex, 15A: Leviton 5261-CH; Hubbell 5235; Cooper 775

G. Weatherproof Receptacles:
1. Duplex, weatherproof while-in-use rated coverplate with hinged door.
2. All 15- and 20-ampere, 125- and 250-volt non-locking receptacles located in damp or wet locations shall be a listed weather-resistant type. Listed devices shall bear a “WR” marking on the face that is visible when installed.

H. Power Connection to Electrified Furniture System:
1. Single gang stainless steel coverplate with factory-cut hole suitable for connection or electrified furniture system wiring whip.

2.4 WALL DIMMERS

A. Wall dimmers shall be suitable for control of the load type (incandescent, low-voltage magnetic, low-voltage electronic, solid state, or fluorescent), load capacity, and branch circuit voltage of the lighting fixtures controlled.

B. The Contractor is responsible for coordinating loads, load types, and ganging of wall dimmers.

C. Provide power interface modules for dimmers where required to serve load types and magnitudes per the Drawings.

D. Dimmers shall be ganged with adjacent switches to allow for a multi-gang coverplate where multiple devices are installed in a common wall. Where ganged, Contractor shall ensure the de-rated dimmer (where heat fins are removed) is suitable for the load controlled.

E. Preset type, rocker handle style on/off switch with captive dimming slider, power failure memory, front-accessible service switch; Lutron Diva series.

F. Dimmers shall incorporate solid state Triac dimming rated for a minimum of 150 percent of the control’s capacity.

G. Dimmers shall incorporate surge protection to withstand surges of 6000V, 200A meeting ANSI/IEEE std. C62.41-1980.

H. Dimmers shall include voltage compensation to stabilize light output from variations in the AC line-voltage. Dimmers in which the light output is not held constant with varying AC line-voltage shall not be acceptable.

I. Dimmers shall utilize a large toroidal choke to minimize radio frequency interference. Dimmers shall not be susceptible to damage due to 16kV static discharges.

J. Dimmer slide position shall indicate perceived light level, using the square law power curve in the IESNA Lighting Handbook, 9th edition. Dimmers shall provide smooth and continuously variable control of light intensity.

K. Three-way dimmers shall be capable of operating in either 3-way switch location.

L. Plastic parts shall not fade or yellow with prolonged exposure to sunlight. Visible parts shall exhibit ultraviolet stability as defined in ASTM D4674-89.

2.5 OCCUPANCY SENSORS

A. Occupancy sensors shall be suitable for control of the load type (incandescent, low voltage, or fluorescent), load capacity, and branch circuit voltage of the lighting fixtures controlled.

B. Ceiling-mounted devices shall be dual-technology type with self-adjusting time delay and sensitivity. Wall switch devices shall be passive infrared.

DocuSign Envelope ID: 330DEBD6-9A9E-4F34-BDCC-1AC1BAA701E9

C. Wall Switch:
   1. Manual ON, auto OFF control switches.
   2. Single level control switch or matching dual-level switching type as indicated on the Drawings.
   3. Bypass override ON switch in the event of product failure.
   4. 120/277V operation.
   5. Provide sensors appropriate for the room size coverage
   6. Hubbell/Mytech WSI 1200 series, Novitas Model 01-400 series, or Watt Stopper WA-200 series.

D. Ceiling Mounted:
   1. One-way type: Hubbell/Mytech CAD-1000 series, Novitas Model 01-100 series, or Watt Stopper DT-200 series.
   2. Two-way types: Hubbell/Mytech CAD-2000 series, Novitas Model 01-310 series, or Watt Stopper DT-300 series.
   3. Corridor type: Mytech ONMI-US 2000, Novitas Model 01-180 (one way) and 01-190 (two way) series.

E. Switchpacks:
   1. Provide switchpacks as required for circuiting and control as shown on the Drawings.
   2. 120/277V operation.
   3. Hubbell/Mytech UPI, Novitas Model 13-051, or Watt Stopper BZ-100.

2.6 PLUGSTRIP AND SURFACE RACEWAYS

A. Provide plugstrip and surface-mounted raceway system in lengths shown and suitable for the branch circuiting shown on the Drawings.

B. Plugstrip shall be grounding type, painted color as selected by Architect. Provide isolated ground type plugstrip where served by an isolated grounding conductor.

C. All surface telecom raceways shall have full capacity corner elbows to accept fiber cable installations.

D. Power type:
   1. Single-compartment surface metal raceway with removable cover.
   2. Single receptacle outlets mounted on 12-inch centers.
   3. Wiremold 2000 series, or Hubbell 2000 series.

E. Power/Telecom type:
   1. Two-compartment surface metal raceway with internal divider and removable cover.
   2. Duplex receptacle outlets and telecom fittings mounted on 12-inch centers.
   3. Wiremold V-4000 series or Hubbell 4000 IV series, with combination type covers.

2.7 COVERPLATES

A. Provide coverplates for wiring devices. Provide multiple gang coverplates where multiple devices are installed in a common location.

B. Provide stainless steel, smooth-face coverplates in equipment rooms. Provide nylon thermoplastic, smooth-face coverplates in other areas. Thermoset coverplates are not acceptable.

2.8 MISCELLANEOUS DEVICES

A. Pushbutton: Glowing button, Leviton 9702.

B. Buzzer: Leviton 602; provide transformer.

C. Bell: Leviton 601; provide transformer.

PART 3 - EXECUTION

3.1 GENERAL

A. General:
   1. Verify the exact location of wiring devices with Architect.

DocuSign Envelope ID: 330DEBD6-9A9E-4F34-BDCC-1AC1BAA701E9

2. Devices mounted above counters shall be two inches above the top of the backsplash to the bottom of the coverplate.
3. Provide a number 12 grounding conductor from the device grounding terminal to the panelboard ground bus. Bond wiring device to the outlet box.
4. Connect electrified furniture system wiring whip to furniture feed power outlet. Provide approved handle ties for circuit breakers feeding multiwire branch circuits as required for disconnecting means.
5. Receptacles mounted in boxes shall be installed so that the mounting yoke or strap of the receptacle is held rigidly against the surface of the wall. Drywall or plaster surfaces shall be repaired so there are no gaps greater than ⅛ inch from the edge of the box or fitting.
6. Receptacle faces shall project a minimum of 0.015 inches [0.4 millimeters] from the faceplate. Faceplates shall be installed so as to completely cover the opening and seat against the mounting surface.

B. Switches:
1. Mount switches vertically with the ON position on top.
2. Mount switches on the strike side of doors.
3. Provide rocker handle type lighting switches in all areas.

C. Receptacles:
1. Mount receptacles vertically with the grounding pin on bottom.
2. Provide designer style type duplex receptacles to match rocker handle type lighting switches in all areas.

D. Occupancy Sensors:
1. It shall be the Contractor's responsibility to locate and aim sensor(s) in the correct location required for complete and proper volumetric coverage within the range of coverage(s) of controlled areas per the manufacturer's recommendations, as the range of coverage of occupancy sensors may vary from one manufacturer to another.
2. Rooms shall have 90 to 100 percent coverage to completely cover the controlled area to accommodate all occupancy habits of single or multiple occupants at any location within the room(s). The locations and quantities of sensors shown on the Drawings are diagrammatic and indicate only the rooms which are to be provided with sensors. The Contractor shall provide additional sensors if required to properly and completely cover the respective room. Where two or more occupancy sensors are indicated within a room or space, they shall be arranged so that the coverage overlaps an adjacent sensor’s coverage by not less than 25 percent.
3. It is the Contractor’s responsibility to arrange a pre-installation meeting with the manufacturer's factory-authorized representative, at the Owner's facility, to verify placement of sensors and installation criteria.
4. Proper judgment must be exercised in executing the installation so as to ensure the best possible installation in the available space and to overcome local difficulties due to space limitations or interference of structural components.
5. Face plate color to be selected by Architect. Submit samples of standard colors to Architect for review.
6. Provide switchpacks as required for multiple sensor locations and multiple control circuits.
7. Provide override switch at wall for ceiling-mounted occupancy sensor locations.

E. Plugstrip:
1. Provide a 1-inch empty conduit home run to the nearest telecommunications terminal board for each 12 linear feet of telecommunications plugstrip.

F. Coverplates:
1. Install device plates in full contact with wall surface. Plates shall not project out from the wall.
2. Coverplates for multiple gang wall dimmers shall be continuous flush type tailored to match wall dimmer physical dimensions.

DocuSign Envelope ID: 330DEBD6-9A9E-4F34-BDCC-1AC1BAA701E9

3.2 CONTROL DEVICE COMMISSIONING

A. Upon completion of the installation, all control systems and devices shall be commissioned. Occupancy sensors shall be completely commissioned by the manufacturer's factory-authorized technician who will verify all adjustments and sensor placement to ensure a trouble-free occupancy-based lighting control system.

B. The electrical contractor shall provide both the manufacturer and the electrical engineer with ten working days' written notice of the scheduled commissioning date.

C. Upon completion of the controls system fine-tuning, the factory-authorized technician shall provide the training necessary to familiarize the Owner's personnel with the operation, use, adjustment, and problem-solving diagnosis of the occupancy sensing devices and systems.

END OF SECTION

DocuSign Envelope ID: 330DEBD6-9A9E-4F34-BDCC-1AC1BAA701E9

SECTION 99-262813

600V FUSES

PART 1 - GENERAL

1.1 DESCRIPTION

A. Provide 600V fuses in accordance with the Contract Documents.

1.2 QUALITY ASSURANCE

A. All fuses shall be of the same manufacturer.

1.3 REFERENCE STANDARDS

A. UL 198 and 977.

1.4 SUBMITTALS

A. No requirements.

PART 2 - PRODUCTS

2.1 ACCEPTABLE MANUFACTURERS

A. Bussmann or Littlefuse.

2.2 FUSES

A. 601 amperes through 6,000 amperes:
   1. UL Class L.
   2. 200,000 RMS-symmetrical amperes interrupting rating.
   3. Bussmann KRP-C or Littlefuse KLP-C.

B. 600 amperes and below:
   1. UL Class RK1.
   2. 200,000 RMS-symmetrical amperes interrupting rating.
   3. Bussmann LPN-RK (250V) or LPS-RK (600V); or Littlefuse LLN-RK (250V) or LLS-RK (600V).

2.3 SPARE FUSES

A. Provide 10 percent (minimum of 3) spare power and control fuses of each type and rating utilized.

B. Provide spare fuse cabinets in the main switchgear room and rooms with equipment utilizing 15 or more fuses.

PART 3 - EXECUTION

3.1 GENERAL

A. Fuses shall not be installed until equipment is ready to be energized.

END OF SECTION

DocuSign Envelope ID: 330DEBD6-9A9E-4F34-BDCC-1AC1BAA701E9

SECTION 99-262816

DISCONNECT SWITCHES AND INDIVIDUAL MOTOR CONTROLLERS

PART 1 - GENERAL

1.1 DESCRIPTION

A. Provide disconnect switches and individual motor controllers in accordance with the Contract Documents.

1.2 QUALITY ASSURANCE

A. Disconnects and individual motor controllers shall be of the same manufacturer as the switchboards.

1.3 REFERENCE STANDARDS

A. Disconnect Switches:
   1. Federal Specification W-S-865C
   2. NEMA KS1
   3. UL 98 (File #4776) and 508

B. Individual Motor Controllers:
   1. NEMA ICS 2-321
   2. UL 547, 845 and 1004

1.4 SUBMITTALS

A. No requirements.

1.5 FIELD TESTING

A. Test each individual motor controller and verify proper operation.

B. Test motors under load and verify proper rotation.

1.6 IDENTIFICATION

A. Provide an identification nameplate for each disconnect switch and individual motor controller.

PART 2 - PRODUCTS

2.1 ACCEPTABLE MANUFACTURERS

A. Cutler Hammer, General Electric, Siemens, or Square D.

2.2 DISCONNECT SWITCHES

A. Heavy duty, horsepower rated, quick-make, quick-break, dead-front type. Self-contained unit in a NEMA 1 gasketed enclosure (NEMA 3R where installed outdoors), externally operable from the front.

B. Defeatable interlock to prevent opening the door when the switch is in the ON position. Handle shall be capable of being padlocked in the OFF position.

C. Fusible switches shall be equipped with rejecting type clips suitable for UL Class R fuses up to 600A, suitable for UL Class L fuses above 600A. Interrupting rating shall be 200,000 RMS-symmetrical amperes.

D. Voltage, ampacity, horsepower rating, and number of poles shall be appropriate for system and load served. Provide neutral pad for circuits with neutral conductors. Provide ground lug.

E. Provide 6-pole switches for connection to motors requiring 6-motor leads.

DocuSign Envelope ID: 330DEBD6-9A9E-4F34-BDCC-1AC1BAA701E9

2.3 THERMAL OVERLOAD/DISCONNECT SWITCH

A. Single-phase manual motor starter with quick-make, quick-break toggle mechanism and field-adjustable overload heater element.

B. Manual motor starters shall be sized for the motors served.

2.4 INDIVIDUAL MOTOR CONTROLLER

A. Self-contained unit in a NEMA 1 gasketed enclosure (NEMA 3R where installed outdoors), externally operable from the front.

B. Provide full voltage non-reversing (FVNR) type combination magnetic starters for motors of ½ HP to 60 HP.

C. Provide reduced voltage, non-reversing, auto-transformer type combination magnetic starters for motors 75 HP and larger.
   1. Two-winding, open delta connected type.
   2. Adjustable timing relay for start-to-run transfer timing.
   3. Closed transition from reduced to full voltage.
   4. Field-adjustable auto-transformer taps: 50 percent, 65 percent and 80 percent. Factory-set at 80 percent.

D. Fusible switch type disconnect with clips for UL Class R type fuses.

E. Provide an individual control power transformer with two primary and one secondary control fuses for each motor controller. The other secondary lead shall be grounded. Secondary voltage shall be 120V AC.

F. Provide each motor controller with three phase, ambient temperature compensating, thermal overload relays with heaters. Overload relays shall be adjustable from 90 percent to 110 percent of heater rating, factory-set at 100 percent. Provide an insulated pushbutton on the outside of door to reset overload relays.

G. Provide each motor controller with a Hand-Off-Automatic (HOA) selector switch. Provide a Hand-Automatic (HA) selector for life safety equipment. Mount switch on outside of door.

H. Provide each motor controller with two normally open and two normally closed auxiliary contacts, green OFF and red RUNNING long life (50,000 hours) pilot indicators on outside of door, auxiliary relays, and other devices required for operation of the equipment to be controlled.

PART 3 - EXECUTION

3.1 GENERAL

A. Disconnect switches and individual motor controller shall be installed within ten feet of load served and installed within sight of the motor.

B. Provide independent support; do not mount on the housing of the equipment served.

C. Conduit connected between disconnect switch or individual motor controller and load served shall be liquid-tight flexible metal conduit, 24 inches minimum length, 36 inches maximum length.

D. Each disconnect switch serving smoke control system air handling equipment shall be provided with an integral, internal auxiliary switch which shall be connected to the Fire Management System for status indication of the OPEN/CLOSED status of the disconnect switch.

END OF SECTION

DocuSign Envelope ID: 330DEBD6-9A9E-4F34-BDCC-1AC1BAA701E9

SECTION 99-265000

LUMINAIRES AND ACCESSORIES

PART 1 - GENERAL

1.1 DESCRIPTION

A. Provide luminaires and accessories in accordance with the Contract Documents.

1.2 QUALITY ASSURANCE

A. Lamps shall be of the same manufacturer.

B. Ballasts shall be of the same manufacturer for each lamp type.

C. Occupancy sensors shall be certified for operation with specific ballasts utilized in controlled lighting fixtures.

D. Equipment shall be certified for use in the State of California and shall meet the California Energy Code and local energy ordinances.

1.3 REFERENCE STANDARDS

A. Ballasts: ANSI C82.2 and C82.11, FCC CFR 47 Part 18, Public Law 100-357, and UL 935 and 1029.

B. Cords: UL 62.

C. Exit Signs and Emergency Luminaires: NFPA 70, and UL 101 and 924.

D. Hazardous Locations: UL 506, 844, 1203, and 1225.

E. Lamp Holders and Starters: UL 496, 542 and 879.

F. Luminaires: UL 57, 676, 1570, 1571 and 1572.

G. Metal Halide and Mercury Vapor Lamps: Federal Standard 21 CFR 1040.30.

H. Photometric data: Independent testing laboratory certified.

I. State Energy Regulations.

1.4 SUBMITTALS

A. Manufacturer's product data sheets for each luminaire indicating luminaire type, ballast quantity and type, lamp quantity and type, photometric data, materials, finishes, accessories, voltage, input watts, CFM data, and photographic image of luminaire.

B. Manufacturer's data sheets for each ballast including ballast type, power factor, input voltage, input watts, and ballast factor.

C. Scaled and dimensioned detail plan and elevation drawings of custom and continuous row type luminaires.

D. Seismic restraint calculations.

PART 2 - PRODUCTS

2.1 ACCEPTABLE MANUFACTURERS

A. Lighting Luminaires: Refer to luminaire schedule on the Drawings, and Specification Section 99-265000.

B. Ballasts:
   1. Fluorescent hybrid or magnetic type: Advance, Jefferson, or MagneTek.
   2. Fluorescent high frequency electronic type: Advance, Energy Savings Inc., MagneTek, Motorola, or Osram/Sylvania.
   3. Fluorescent dimming type for daylighting applications (100 percent or 10 percent range): Advance Mark VII, Lutron Eco-10, or Motorola Helios.

DocuSign Envelope ID: 330DEBD6-9A9E-4F34-BDCC-1AC1BAA701E9

4. Fluorescent dimming type for non-daylighting applications (100 percent to 5 percent range): Advance Mark X, or Lutron Hi-Lume.
5. HID magnetic type: Advance, Robertson, or MagneTek.
6. HID electronic type: WPI Electronics, Inc.

C. Lamps: General Electric, Osram/Sylvania, Philips, or Venture Lighting.

D. Emergency Battery Packs: Iota Series or Sure-Lites FBP Series with minimum 1,200 lumens output for linear fluorescent lamps, and RBP Series for compact fluorescent lamps (minimum of 95 percent of compact fluorescent lamp rating).

2.2 LAMPS

A. Provide a complete set of new lamps in each luminaire.

B. Lamps shall be as follows unless otherwise noted on the luminaire schedule on the Drawings:
1. Linear fluorescent: T5 or T8, 830, energy savings type.
2. Twin tube, double twin tube, or triple twin tube fluorescent: 830.
3. Long compact fluorescent (Biax): 830.
4. Incandescent: 130V, inside frosted.
5. Metal halide: Minimum 75 CRI, open fixture rated 3000K color temperature for up to 150W lamps. Minimum 65 CRI for lamps 175W and higher.
6. High pressure sodium: Deluxe color, minimum 65 CRI.

2.3 BALLASTS

A. General:
1. Ballasts shall be suitable for the electrical characteristics of the supply circuits to which they are to be connected, and which are suitable for operating the specified lamps.
2. Provide electronic ballasts wherever there is an electronic ballast available for any specified lamp or combination of lamps. Where electronic ballasts are not available, provide hybrid or magnetic ballasts.
3. Where installed outdoors and wherever ballasts are installed in a non-heated environment (such as walk-in freezers, cold food handling areas, or outside air plenums), ballasts shall be capable of lamp starting at ambient temperatures down to minimum 20 degrees F.
4. Luminaires controlled by dimmers shall be provided with dimming type ballasts.
5. Single-lamp ballasts for long fluorescent lamps shall be kept to a minimum, and shall only be used for the last odd lamp in a room or space.

B. Fluorescent:
1. Hybrid or Magnetic Ballasts:
   a. Ballasts shall be energy saving type, super low heat, rapid start, high power factor (90 percent minimum), Class A sound rated, UL Class P thermal protection, 0.88 minimum ballast factor, full light output with specified lamps, CBM/ETL certified, and minimum two-year warranty.
2. High Frequency Electronic Ballasts:
   a. High frequency electronic type operating lamps at a frequency of 20kHz or higher with no detectable lamp flicker.
   b. Provide instant start type ballasts for T-8, T-5, T-4 and T-2 lamps. Provide rapid start type ballasts for T12 and compact fluorescent lamps.
   c. Ballast factor shall be 0.88 minimum unless noted to be low output or high output on the Luminaire schedule. Low output type ballasts shall have a ballast factor between 0.75 and 0.78. High output type ballasts shall have a ballast factor between 1.10 and 1.20. Maximum ballast factor for any type ballast shall not exceed 1.20.
   d. Ballasts shall meet or exceed FCC Regulations Part 18 and NEMA standards regarding electromagnetic and radio frequency interference and shall not interfere with operation of other electrical equipment.
   e. Ballasts shall meet or exceed ANSI C62.41, Category A and IEEE 587 standards regarding harmonic distortion and surge protection.

DocuSign Envelope ID: 330DEBD6-9A9E-4F34-BDCC-1AC1BAA701E9

f. Ballasts shall not be affected by lamp failure and shall yield normal lamp life. Ballasts shall maintain light output at 10 percent for line voltage fluctuations of 10 percent.
g. Ballasts for compact fluorescent, T-5, T-4 and T-2 lamps shall contain end of lamp life sensing and provide shut-down protection.
h. Lamp current crest factor shall not exceed 1.7.
i. Total harmonic distortion shall be less than 20 percent.
j. Minimum three-year warranty.

3. Interwiring for long fluorescent lamps.
   a. Ballast wiring for single-lamp continuous row luminaires shall allow independent control of each continuous row of luminaires. Provide as many three-lamp ballasts as possible; provide two-lamp ballasts to finish a row.
   b. Ballast wiring for double-lamp continuous row luminaires shall allow independent multiple level control of each row of lamps within each continuous row of luminaires (side lamp/side lamps). Provide as many three-lamp ballasts as possible; provide two-lamp ballasts to finish a row.
   c. Ballast wiring for one-lamp luminaires shall allow independent control of two adjacent fixtures. Provide 1 two-lamp ballast and interwiring between each pair of luminaires.
   d. Where single level control of two-lamp luminaires is shown, ballast wiring shall allow independent control of each fixtures. Provide 1 two-lamp ballast per luminaire.
   e. Where multiple level control of two-lamp luminaires is shown, ballast wiring shall allow independent multiple level control of two adjacent fixtures (side lamps/side lamps). Provide 2 two-lamp ballasts and interwiring between each pair of luminaires.
   f. Ballast wiring for three-lamp luminaires shall allow independent multiple level control of two adjacent fixtures (outside lamps/inside lamps). Provide 3 two-lamp ballasts and interwiring between each pair of luminaires.
   g. Ballast wiring for four-lamp luminaires shall allow independent multiple level control of each fixture (outside lamps/inside lamps). Provide 2 two-lamp ballasts per luminaire.

C. High Intensity Discharge:
1. Magnetic Type:
   a. Constant wattage auto-transformer type, regulated, with integral thermal protection and primary circuit fuse. Ballast shall allow maximum of plus or minus 5 percent lamp voltage change with a line voltage variant of plus or minus 10 percent voltage.
   b. Ballast for HID lamps 150W or less shall be lag type reactance, auto-transformer, high power factor type (90 percent minimum).
2. Electronic Type:
   a. High power factor (90 percent minimum), Class A sound rated, UL Class P thermal protection with auto reset, ANSI C62.41 and FCC Part 18C, Class A compliance, CBM/ETL certified, and minimum two-year warranty.

2.4 MATERIALS AND FABRICATION

A. Luminaires shall be completely factory-assembled and -wired, and equipped with necessary lampholders, ballasts, wiring, shielding, reflectors, channels, lenses, and other parts necessary to complete the luminaire installation.

B. Luminaire hardware shall be concealed. Weld exposed metal at joints, fill with weld material, grind smooth, and make free from light leaks. Gasket incandescent luminaires with overlapping trim. Weld ballast support studs, socket saddle studs, and reflector support studs to luminaire body; self-threading screws are not acceptable. Ventilate ballast compartments and firmly secure ballast to conducting metal surface. Luminaires shall be designed for bottom relamping, unless otherwise noted.

C. Construct luminaires with a minimum number of joints. Unexposed joints shall be welded, screwed or bolted; soldered joints are not acceptable. Do not use self-tapping methods or rivets for fastening removable parts used to gain access to electrical components requiring service or replacement, or for fastening electrical components or their supports.

DocuSign Envelope ID: 330DEBD6-9A9E-4F34-BDCC-1AC1BAA701E9

D. Cast or extruded parts of luminaires shall be close grained and free from imperfections or discolorations, rigid, true to pattern, of ample weight and thickness, and properly fitted, filed, ground, and buffed to provide finished surfaces and joints free of imperfections.

E. Housings for fluorescent and HID luminaires shall be designed to make electrical components easily accessible and replaceable, without removing the luminaire body from its mounting.

2.5 FINISHES

A. Luminaire finishes shall provide a durable, wear-resistant surface. Surfaces shall be chemically cleaned and treated with corrosion-inhibiting (phosphating) material to assure positive paint adhesion. Exposed metal surfaces (brass, bronze, aluminum, etc.) and finished castings (except chromium plated or stainless steel parts) shall have an even coat of high grade methacrylate lacquer or transparent epoxy. Anodize exposed aluminum surfaces in a 20-minute bath for corrosion resistance. Sheet steel luminaire housings, and iron and steel parts which have not received phosphating treatment, or which are to be utilized in exterior applications, shall be zinc- or cadmium-plated, or hot-dip zinc galvanized after completion of all forming, welding, and drilling operations.

B. Screws, bolts, nuts, and other fastening or latching hardware shall be cadmium plated.

C. Provide luminaires with a high temperature baked enamel coating of selected color and finish, unless otherwise noted. White baked enamel finished surfaces shall have a minimum reflectance of 86 percent, unless otherwise noted.

2.6 REFLECTORS

A. Aluminum Reflectors:
   1. Reflectors and reflecting cones or baffles shall be fabricated from #12 aluminum reflector sheet, minimum 0.057 inches thick (15 gauge). Material shall be free of tooling marks, spinning lines, and marks or indentation caused by riveting or other assembly techniques. No rivets, springs, or other hardware shall be visible after installation.
   2. Reflectors and baffles shall be polished, buffed, and anodized (Alzak), with finish color as selected by the Architect.
   3. Luminaires provided with tri-phosphor type lamps shall be provided with low iridescence aluminum reflectors to eliminate rainbow effect on aluminum reflector.

B. Painted Reflectors:
   1. Painted reflectors shall be formed before application of primer and paint. Reflectors and reflector bodies for luminaires with baked white enamel finish shall meet the following requirements and tests:
      a. After 100 hours of exposure to fade-o-meter, reflectance shall be not less than 86 percent, and finish shall show no visible color change.
      b. After 100 hours of exposure to 100 percent humidity at 100 degrees F, (cook box test) finish shall show no blistering or other degraded effects.
      c. After 150 hours of exposure to salt spray (20 percent sodium chloride) shall cause no breakdown of film.

2.7 LENSES, FACEPLATES AND TRIMS

A. Plastic lenses shall be of virgin methyl methacrylate, unless otherwise indicated. Polystyrene lenses are not acceptable.

B. Lenses, louvers, and other light diffusing components shall be contained in frames. Lenses shall be removable but positively held within the frames so that hinging or other motion of the frame will not cause the diffusing components to drop out.

C. Faceplates on incandescent recessed luminaires shall open for access to the interior of the luminaire, serve as a ceiling trim, and positively held to the luminaire body by adjustable means that permit the faceplate to be drawn up to the ceiling as tight as necessary to insure complete contact of faceplate with the finished ceiling.

DocuSign Envelope ID: 330DEBD6-9A9E-4F34-BDCC-1AC1BAA701E9

D. Provide ceiling trims for rectangular recessed luminaires with mitered corners, continuously welded and smoothed before shop finishing. Lapping of trim metal is not acceptable.

2.8 LUMINAIRE WIRING

A. Provide wiring between fluorescent and HID lampholders and ballasts of same or heavier gauge than the leads furnished with the ballasts, and having same or higher insulating and heat-resisting characteristics. Internal wiring of luminaires shall contain a minimum number of splices. Splices shall be made with suitable mechanical insulated steel spring type connectors.

B. Wiring channels and wireways shall be free from projections and rough or sharp edges. Provide bushings at points or edges over which conductors pass.

2.9 LAMPHOLDERS

A. Incandescent and HID lampholders shall be porcelain bases with copper screw shells.

B. Fluorescent lampholders shall be white, heat-resistant plastic. Fluorescent lampholders operating with an open circuit voltage in excess of 300 volts shall be of the safety type which opens the supply circuit when the lamp is removed from the socket.

C. Rigidly and securely attach lampholders to the luminaire enclosure or husk.

D. Pull chains shall be insulated joint type.

E. Provide lampholders suitable for specified lamps, and set to position the lamps in optically correct spacing and relationship to lenses, reflectors, filters, and baffles.

F. Where fluorescent lamps are installed in unenclosed luminaires, provide a minimum of two lamp-retaining clips per lamp.

2.10 EXTERIOR LUMINAIRES

A. Exterior luminaires shall be designed and manufactured specifically for outdoor service. Components including nuts, bolts, rivets, springs, and similar parts, shall be corrosion resistant.

B. Exterior luminaires shall be suitably and effectively gasketed to prevent entrance of moisture into luminaire. Luminaires which are directly exposed to the elements shall be labeled for wet locations. Luminaires which are exposed to dampness shall be labeled for damp locations.

C. Metal parts of luminaires requiring painting shall be painted with suitable weather and moisture-resisting paint equal to epoxy-based coatings.

D. Aluminum parts of exterior luminaires which are not specified as requiring a painted finish shall be anodized.

2.11 ACCESSORIES

A. Recessed incandescent luminaires shall be furnished with thermal protection in accordance with Article 410-65 of the NEC.

B. Where utilized as raceways, luminaires shall be suitable for use as raceways. Provide feed through splice boxes where necessary.

C. Provide installation and supporting hardware including stems, plates, plaster frames, hangers, and similar items, for support of luminaires for the ceiling construction in which they shall be installed. Provide plaster frames made of non-ferrous metal, or of steel that has been suitably rust-proofed after fabrication.

D. Air handling luminaires shall have hinged air control vanes within the side slots (bent metal vanes are not acceptable) factory-set at fully open. Provide heat removal slots at luminaire ends.

E. Interior fluorescent and HID luminaires utilizing ballast sound rating of lower than A shall be provided with acoustical mounting pads between luminaire housing and ballast to minimize vibration and noise level.

F. Provide tempered glass lenses for metal halide luminaires.

G. Provide fastening devices of a positive locking type, which do not require special tools to apply or remove them. Do not use tie wires in place of fastening devices.

DocuSign Envelope ID: 330DEBD6-9A9E-4F34-BDCC-1AC1BAA701E9

H. Attach reflectors to housing by means of safety chains to prevent reflectors from falling. No part of the chain shall be visible after installation.

I. Provide a ceiling canopy for each stem. Canopy finish shall match stem finish.

J. Luminaires installed in air plenums shall be enclosed and gasketed.

K. Provide factory-installed integral emergency battery packs in luminaires shown on the Drawings. Battery pack shall be sealed, maintenance-free nickel-cadmium battery capable of operating one or two 4-foot long fluorescent lamps for a minimum of 90 minutes, with integral charger, pilot light and test switch.

PART 3 - EXECUTION

3.1 GENERAL

A. Luminaire locations as indicated on the Drawings are general and approximate. Verify exact location of luminaires with Architect prior to installation. Verify adequacy of clearance with other equipment such as ducts, pipes, conduit, or structural elements. Bring conflicts to Architect's attention before proceeding with work.

B. Verify ceiling construction and furnish appropriate luminaire mounting supports, hardware, trim, and accessories for each luminaire.

C. Install luminaires in mechanical equipment rooms after ductwork and piping installation. Locate and mount luminaires as indicated on the Drawings unless mechanical equipment prohibits or makes it impractical to do so. In such cases, chain- or wall-mount luminaires so that serviceable equipment is illuminated.

D. Luminaires shall be installed free of light leaks, warps, dents, or other irregularities. Light leaks are not acceptable.

E. Install reflector cones, aperture plates, lenses, diffusers, louvers, and decorative elements of luminaires after completion of wet work, plastering, painting, and general clean-up in the area of the luminaires. Provide final focusing and adjusting of lighting equipment. Focusing and adjusting shall be performed under the Architect's supervision after normal working hours.

F. Parabolic luminaires shall be installed with mylar cover over louvers. Cover shall be UL Listed for temporary lighting. Upon completion of work, remove mylar cover with white gloves.

G. Visible hanging devices shall be finished to match the luminaire finish, unless otherwise noted. Suspended fixtures shall hang level and aligned when installed in rows.

H. Provide fire-rated enclosures around recessed luminaires that are installed in fire-rated ceilings.

I. Provide attachment devices, brackets, plaster rings, saddle hanger and tie bars made of formed, rolled, or cast metal shapes with the requisite rigidity and strength to maintain continuous alignment and support of installed luminaires.

J. Luminaires mounted in suspended ceilings shall be attached to the main runners of the ceiling system with appropriate mounting hardware. Provide independent 45-degree slack cables from corners of luminaires to structure above.

K. Provide at least two supports for single fluorescent luminaires. Where luminaires are continuously mounted in rows, provide supports at maximum intervals of eight feet, or closer if necessary to prevent visible deflection.

L. Equipment requiring access for service and maintenance shall be installed so that components requiring access are readily accessible.

M. Immediately prior to occupancy clear reflectors, reflector cones, aperture plates, lenses, trim rings, faceplates, louvers, lamps and decorative elements.

N. Replace burnt out lamps and noisy or defective ballasts.

O. Luminaires with emergency battery packs connected to unswitched circuits shall be permanently on and shall go into the emergency mode upon loss of power to the emergency battery pack. Luminaires with emergency battery packs connected to switched circuits shall be controlled on

DocuSign Envelope ID: 330DEBD6-9A9E-4F34-BDCC-1AC1BAA701E9

and off by the controlling device and shall go into the emergency mode upon loss of power to the emergency battery pack (provide switched and unswitched leads to these luminaires).

P. Contractor shall locate and aim “bug-eye” emergency egress fixtures (Type W1) as required to provide acceptable illumination levels over the path of egress.

END OF SECTION

DocuSign Envelope ID: 330DEBD6-9A9E-4F34-BDCC-1AC1BAA701E9

SECTION 99-265100

LIGHTING FIXTURES, LAMPS, BALLASTS

PART 1 - GENERAL

1.1 DESCRIPTION

A. Provide and install lighting fixtures as shown on drawings and as specified in this and all related Sections.

1.2 DEFINITIONS

A. The term Architect refers to the Architect, Interior Designer, Lighting Designer or Owner's Representative individually or collectively.

1.3 GENERAL REQUIREMENTS

A. Provide all lighting fixtures as shown complete with all lamps, completely wired, controlled and securely attached to supports.

B. Where a catalog number and a narrative or pictorial descriptions are provided, the written description shall take precedence and prevail.

C. General Contractor shall provide electrical subcontractor with entire lighting specification (including fixture illustrations and sketches); electrical subcontractor shall provide each specified manufacturer with complete information about the fixtures they will supply.

D. Type of fixtures shall be as indicated alphanumerically and as specified.

E. Fixture details shown may be modified by the manufacturer provided all of the following conditions have been met:

1. Fixture performance is equal or improved;
2. Structural, mechanical, electrical, safety, and maintenance characteristics are equal or improved;
3. Cost to the Owner is reduced or equal.
4. Modifications have been reviewed by the Architect and have been approved by the Architect in writing.

1.4 STANDARDS

A. The standards and regulating committees referred to in this specification and to which compliance with is required are:

1. UL Underwriters Laboratories
2. NRTL Nationally Recognized Testing Laboratory
3. NEC National Electric Code
4. ANSI American National Standards Institute
5. ASTM American Society of Testing and Materials
6. NEMA National Electrical Manufacturers Association
7. IEC International Electrotechnical Commission
8. CALiPER Commercially Available LED Product Evaluation and Reporting (US DOE)
9. NVLAP National Voluntary Laboratory Accreditation Program (US DOE)

B. All fixtures and assembled components shall be new, of good quality, and be approved by and bear the label of UL for the applicable location and conditions (wet, damp, dry, etc.) or other approved testing agencies, i.e. CSA, ETL, unless otherwise specified in writing.

C. All fixtures shall meet all required local, state and/or national building, electrical and energy codes and regulations.

1.5 BIDDING

A. Follow bidding procedures as described in Parts 1 through 7 of the Special Provisions.

DocuSign Envelope ID: 330DEBD6-9A9E-4F34-BDCC-1AC1BAA701E9

B. Provide unit and alternate prices as required in the Lighting Fixture Schedule at the end of this section.

1.6 SUBSTITUTIONS

A. Bidders' attention is called to the following procedure to be followed in submitting alternate fixture manufacturers than those specified:
   1. Bidders wishing to obtain approval on brands other than those specified by name and/or catalog number in the Lighting Fixture Schedule at the end of section, shall submit their requests not later than ten (10) business days before the bid opening. Approval will be in the form of an addendum to the specifications issued to all prospective bidders indicating that the additional brand or brands are approved as equal to those specified as far as the requirements of the project are concerned. If the bidders do not elect to obtain prior approval during the time so specified, the Owner has no obligation to review or consider any such article after the contract award.
   2. If the bidder wishes to substitute fixtures from alternate manufacturers, his attention is called to Section 2.01, GENERAL MATERIAL REQUIREMENTS of PART 2 - PRODUCTS. In addition, he shall note that the dimensions of visible parts of many fixtures (for example, the aperture diameters of incandescent fixtures) are binding to the bidder and cannot be changed without prior approval by the Architect.
   3. Request for approval shall be accompanied by working fixture samples (with an appropriate lamp, complete photometric, mechanical and electrical data, list of materials and finishes and unit cost to the Owner) of both the specified brand and the proposed substitutes as required to make complete comparison and evaluation. These samples shall be in addition to those required by Lighting Fixture Specification. The above data shall be delivered separately to the Architect and the Lighting Designer. The fixture samples shall be furnished and installed, at the bidder's expense, at the location selected by the Architect. In addition, the bidder shall furnish the Architect and the Lighting Designer with the name and location of at least one completed project where each proposed substitute has been in operation for a period of at least six (6) months, as well as the names and addresses of the Owner, the Lighting Designer and the Architect of record.

1.7 SUBMITTALS

A. For standard catalog items with no modifications, submit catalog cut sheets prepared by the manufacturer which clearly show all elements to be supplied and all corresponding product data (including lamping; ballast manufacturer and model number; voltage; accessories or options and any miscellaneous items detailed in the written description of the specification.) If cut sheet shows more than one (1) fixture type, all non-applicable information shall be crossed out. For LED fixtures cut sheet shall include:
   1. Maximum power in watts
   2. Maximum designed junction temperature
   3. Heat sink area in square inches
   4. Designed junction to ambient thermal resistance calculation with thermal resistance components clearly defined
   5. L70 in hours when extrapolated for average nighttime operating temperature

B. For LED fixtures also submit:
   1. LM-79 and LM-80 compiant test reports from a CALiPER-qualified or NVLAP-approved testing laboratory for the specific model submitted.
   2. Photometric file based on LM-79 test report.
   3. Test report showing the SPD performances as tested under ANSI/IEEE C62.41.2 and ANSI/IEEE C62.45.
   4. Test report showing mechanical vibration results as tested under California Test 611 or equal.
   5. Data sheets from the power supply manufacturer that include life expectancy information.

DocuSign Envelope ID: 330DEBD6-9A9E-4F34-BDCC-1AC1BAA701E9

C. For custom fixtures, modified fixtures or linear fluorescent fixtures mounted in continuous rows, submit an engineered line drawing prepared by the manufacturer showing all details of construction, lengths of runs, lamping layout, pendant locations, power locations, finishes and list of materials. Drawings must be to scale. Contractor shall provide manufacturer with field dimensions where required. If scallop shields, wallwash reflectors or baffles are required, drawings shall indicate relative position to wall or adjacent vertical surface.

D. For all submittals under paragraphs A through C above, manufacturer shall provide submittals with fixture installation instruction sheets.

E. For all submittals under paragraphs A through C above, manufacturer shall provide submittals within two weeks of receipt of order. All submittals shall have project name and fixture type clearly shown.

F. Fixture cuts and shop drawings shall be submitted in quantities and format as described in the general conditions section the specification.

G. The Architect shall make the final determination as to whether or not the submittal contains sufficient information and reserves the right to request a shop drawing if the fixture cut is insufficient.

H. MOCK-UPS
   1. It shall be the responsibility of the Contractor to provide a mock-up of the lighting fixture or lighting systems as indicated in the fixture description. The mock-up shall be erected within a time period and in a location that is acceptable to the Architect.
   2. The mock-up installation shall closely conform to the conditions of the actual installation as to: height, distance from ceiling, number and type of lamps, material, color and etc. The Contractor shall submit a written description of each proposed mock-up with drawings in order to obtain the Architect's approval prior to commencement of each mock-up.
   3. The purpose of the mock-up will be to study the general appearance and performance of the intended lighting systems. At that time, certain minimal test variations may be requested as to lamp location, lamp type, reflector shape, color and etc. Final modifications, if any, shall be considered a part of these Specifications and shall be accomplished with no additional cost to the Owner.

I. SAMPLES
   1. It shall be the responsibility of the Contractor to provide a sample(s) fixture as indicated in the Lighting Fixture Schedule at the end of section. When samples are called for the manufacturer shall provide two working samples complete with lamp, ballast (rated for 120 Volt operation) and 6’ pig-tail with 3-prong Edison plug.
   2. The sample(s) shall be shipped to a location that is determined by the Architect. Shipping and return shipping costs shall be provided as part of the contract.
   3. The purpose of the sample is to review manufacturing techniques, detailing, lamping and scale. Sample fixtures must be approved prior to fabrication of fixtures for the project. Minor modifications, if any, shall be considered part of these Specifications and shall be accomplished with no additional cost to the Owner.
   4. Sample fixtures may not be used on the project.

1.8 EXTRA STOCK

A. Furnish to the Owner and store at the site where directed, extra stock of each type of lighting fixture type and lamp type installed in the Project in quantities as required by Owner, packaged in manufacturer’s unopened cartons and identified as to contents by fixture type.

B. Furnish items above with appropriate quantity of each exposed trim, fastener, bracket and other items as required for a complete installation.

1.9 WARRANTIES

A. All fixtures and workmanship shall be guaranteed free of defects and fully operational for a minimum of one year after the acceptance of the project by the Owner. Any fixtures or

DocuSign Envelope ID: 330DEBD6-9A9E-4F34-BDCC-1AC1BAA701E9

workmanship found to be defective during the warranty period will be either fixed or replaced by the Contractor at no cost to the Owner.

B. Provide a 7-year manufacturer's warranty against any defects or failures. The warranty period begins on the date of Contract acceptance. Furnish a replacement luminaire within 10 days after receipt of the failed luminaire. The Owner or Architect does not pay for the replacement. Deliver replacement luminaires to the job site.

PART 2 – PRODUCTS

2.1 GENERAL MATERIAL REQUIREMENTS

A. Ferrous mounting hardware and accessories shall be finished using either a galvanic or phosphate primer/baked paint process to prevent corrosion and discoloration of adjacent materials.

B. For weatherproof and vaportight installation, painted finishes of fixtures and accessories shall be weatherproof enamel using proper primers or hot dipped galvanized and bonderized epoxy, in accordance with manufacturer's requirements. Unless otherwise specified all painted surfaces shall have a life expectancy of not less than twenty years.
   1. Hangers shall be conduit with chemically resistant, weatherproof, baked enamel finish.
   2. Where dissimilar metal parts come in contact with each other, apply to both surfaces a coating material to prevent corrosion.
   3. Colors shall be as specified in the the Lighting Fixture Schedule at the end of section of this specification.

C. Fasteners shall be manufactured of non-magnetic stainless steel or anodized aluminum, except in indoor applications where galvanized steel shall be acceptable.

D. Fixtures shall be free of light leaks and shall be designed to provide sufficient ventilation of lamps and ballasts including vent holes where required.

E. Outdoor fixtures shall have wire mesh corrosion resistant screens in the vent holes properly sized to prevent incursion of insects, small animals, and/or other small rodents.

F. All sheet metal work shall be free from tool marks and dents and shall have accurate angles bent as sharp as compatible with the gauges of the required metal. All intersections and joints shall be formed true and of adequate strength and structural rigidity to prevent any distortion after assembly. All sheet metal shall be free of light leaks. All edges shall be finished so there are no sharp edges exposed. All miters shall be in accurate alignment with abutting intersecting members. Piecing of plates in individual runs in single planes and the use of spliced pieces or filler material to cover defective workmanship shall not be acceptable. Sheet metal work shall be properly fabricated so that planes will not deform (i.e. become concave or convex, due to normal expected ambient and operating conditions).

G. Lampholders shall hold lamps securely against normal vibrations and maintenance handling. Provide solid nickel or nickel-and-silver-plated contacts in lampholders for the following types of lamps:
   1. Mogul screw base incandescent, metal halide, and high pressure sodium.
   2. Lamps in outdoor fixtures.
   3. Tungsten-halogen lamps.

H. Wiring channels and lampholder mountings shall be rigid and accurately made.

I. Reflector Cones:
   1. Provide 45° lamp and lamp image cut-off unless otherwise specified. In fixtures where upper reflector is separate from cone, cut-off shall be 45° unless otherwise specified.
   2. Plastic materials shall not be used for reflector cones or aperture plates.
   3. Fixtures in which reflector cones are riveted or welded to housing or where removal of cone requires pressure to be applied to finished surface of reflector shall not be acceptable.
   4. Cone flange shall be formed as an integral part of the cone and shall have identical color and finish as the cone, except as shown. The flange major surface shall be perpendicular to the cone axis. The width of the flange shall adequately cover the ceiling opening without light leaks. No fixture parts (housing, mounting frame, etc.) shall be visible between the ceiling

DocuSign Envelope ID: 330DEBD6-9A9E-4F34-BDCC-1AC1BAA701E9

surface and the edge of the cone flange. The same requirement shall be applicable to fixtures where main reflector extends down to the bottom edge of the fixture without a separate cone. In such case, the flange shall be formed as an integral part of the main reflector.

5. Reflector cones shall be manufactured of uniform gauge, not less than 0.032" thick, high purity aluminum Alcoa 3002 alloy free of spin marks or other defects or blemishes caused during manufacturing.
6. The finish of the inner surface of the reflector shall be highly specular as produced under the Alzak process. The reflector shall have an anodic coating of not less than four mils thick. The reflector inner surface shall be free of water spotting and shall maintain a reflectivity ratio of not less than 85% on clear specular finish. The reflector shall have a low iridescence finish free from multiple colors seen from normal viewing angles. Colors shall be derived from dyes supplied by Sandoz Chemical Company or approved equal.
7. The reflecting surface of the cone shall be tested for proper sealing. Test per ASTM B136-63T.
8. Fixtures with Alzak reflector cones, unless otherwise specified, must be furnished by the same manufacturer.
9. Reflector cone retention devices shall not deform cone in any manner whatsoever.
10. Submit a certificate of compliance with Alzak finish requirements with all requests for approval.

J. Lenses:
1. Fresnel:
   a. Lens shall have uniform brightness throughout the entire visible area at angles from 45° to 90° from vertical, without bright spots or striations.
   b. Lens shall have opaque risers; color shall be as specified in the Lighting Fixture Schedule at the end of section.
   c. Finish of visible regress surface of door shall be matte baked enamel paint, special color as selected by Architect.
   d. All fixtures with fresnel lenses, unless otherwise specified, must be furnished by the same manufacturer.
2. Glass:
   a. Flat glass lenses shall be heat tempered borosilicate glass unless otherwise noted.
   b. Glass finishes, i.e. sandblasting, etching, polishing shall be performed as described in the fixture description.
3. Acrylic:
   a. Lenses shall be of injection molded crystal clear material 100% virgin acrylic (except as shown). For lenses with male pattern of pyramids or cones, specified minimum thickness refers to distance from flat surface to base of pyramids (cones), or thickness of undisturbed material. For lenses with female pattern, specified minimum thickness refers to overall thickness of material.
   b. Lenses shall fully eliminate lamp images when viewed from all directions within the 45° to 90° angle from vertical when the ratio of lamp spacing to the distance from lamp underside to top of lens does not exceed 1.50. Within the viewing angle from 0° to 45° the ratio of maximum brightness (under a lamp) to minimum brightness (between lamps) shall not exceed 3 to 1.
   c. Finishes, i.e. sandblasting, etching, polishing shall be performed as described in the fixture description.

K. Louvers:
1. Parabolic:
   a. Louvers shall be continuously bound in channel formed frame, finish and color as specified or as selected.
   b. Louver shall provide a minimum visual cut-off to the lamp of 45°.

DocuSign Envelope ID: 330DEBD6-9A9E-4F34-BDCC-1AC1BAA701E9

c. The finish of the inner surface of the reflector shall be highly specular as produced under the Alzak process. The reflector shall have an anodic coating of not less than four mils thick. The reflector inner surface shall be free of water spotting and shall maintain a reflectivity ratio of not less than 85% on clear specular finish. The reflector shall have a low iridescence finish free from multiple colors seen from normal viewing angles.

2. Flat Blade:
   a. Provide flat blade louvers within formed frame, finish and color as specified.
   b. Louvers to provide minimum of 45° degree cut-off from lamp image.
   c. Blade thickness to minimum .125” flat steel.

L. In adjustable fixtures, aiming and positive locking devices shall be provided.

M. Fixtures with an adjustable lamp and using a lamp with an asymmetrical light pattern shall have an aiming stop which can be permanently set so that the lamp shall remain correctly positioned after service or relamping.

N. Fluorescent Fixtures:
1. Hot Cathode:
   a. Housing:
      1) No. 22 minimum gauge steel, bonderized or equal rust protected, or No. 16 gauge aluminum rigid construction, suitable for continuous row mounting where indicated.
      2) Finish: Baked enamel paint finish unless otherwise specified, color as specified or as selected.
      3) Exterior Fixture Finishes:
         a) Unless otherwise specified, all painted surfaces shall have an outdoor life expectancy of not less than 20 years. Surfaces shall be prepared, primed, and material applied in accordance with the manufacturer's requirements.
         b) Color: Colors shall be as specified under the Lighting Fixture Schedule at the end of section.
   b. Reflector: Minimum 85% reflectance.
   c. Lightshields:
      1) Frames: Provide extruded aluminum frames with mitered corners filled and ground smooth. Provided with concealed hinges and invisible latching.
      2) No cross bars shall be permitted over lightshields.
   d. Lampholders:
      1) Lampholders shall be UL listed, and meet IEC-60400, “International Standard: Lampholders for tubular fluorescent lamps and startholders”.
   e. For rapid start lamps on single ballasts, provide one (1) grounding lampholder per lamp. Lampholders operating with open circuit voltage in excess of 300 volts shall be safety type and shall open supply circuit when lamp is removed from lampholder.
      1) Mount lamps used in rapid start circuits 430mA and below: within 1/2" of grounded metal as long as the lamp.
      2) 800mA and 1500mA lamps: mount within 1" of grounded metal as long as the lamp.
   f. Fluorescent fixtures shall conform to NEMA Standards, including references to fixture dimensions and temperature ratings.
   g. Ballasts shall be electronic high power factor (greater than 90%), ballast factor (greater than 87%) and approved by UL (UL 935 listed). Ballasts shall be certified for voltage and number of lamps specified and equipped with internal thermal protectors unless otherwise specified.
      1) Ballasts shall have a Crest Factor of less than one and seven tenths.
      2) Ballasts for indoor applications shall be "Class P".

DocuSign Envelope ID: 330DEBD6-9A9E-4F34-BDCC-1AC1BAA701E9

3) Provide multi-lamp ballasts where possible including continuous rows of one-lamp fixtures, and one-lamp ballasts only where the fixture layout does not permit the use of multi-lamp ballasts.
4) Ballast shall be a dedicated ballast to operate a specific lamp, i.e., T8 ballasts specifically for a T8 lamp.
5) All ballasts shall operate at the voltage as described in the Lighting Fixture Schedule at the end of section and confirmed on electrical drawings. Ballasts shall operate lamps properly through the following supply voltage ranges:
   a) Rated voltage +/- 10%
   b) Universal voltage of 108 to 305V on 50 or 60Hz supply
6) Ballast shall tolerate sustained open circuit and short circuit output conditions without damage.
7) Frequency shall be 20 Khz or greater except as noted without any discernible flicker (<3% flicker index).
8) Ballast shall have input current total harmonic distortion not to exceed 10% of the fundamental harmonic (60 Hz).
9) Ballast shall not contain PCB materials.
10) Ballast shall provide transient immunity as recommended by ANSI C62.41-1991 location Category A2.
11) Ballast shall be encapsulated to ensure maximum thermal and structural integrity.
12) Ballast minimum sound ratings:
   a) 265 mA: Class 'A'
   b) 430 mA: Class 'A'
   c) 800 mA: Class 'B'
   d) 1500 mA: Class 'C'
13) All fixtures installed in exterior or unheated interior spaces shall be supplied with ballasts which start lamps down to 0°F unless noted otherwise.
14) Ballasts for T5, T5HO, and CFL lamps shall incorporate auto resetting lamp shutdown circuitry for end of lamp life protection thereby allowing for re-lamping without the need to cycle power.
15) Program Rapid start ballasts shall be used when the lamps are to be frequently turned on/off (with cycles of less than 3 hours). Otherwise ballast shall provide instant starting sequence consistent with ANSI standard C82.11-1993.
16) Ballast shall be manufactured in an ISO 9002 certified facility.
17) Manufacturer shall have minimum 15 years of manufacturing experience.
18) Ballast, unless specified otherwise, shall be same manufacturer and model in each fixture of the same type. Acceptable ballast manufacturers unless otherwise noted are:
   a) Advance
   b) Universal Lighting Technologies
   c) Osram/Sylvania
   d) Lutron

h. Lighting fixtures recessed in a hung ceiling where the space above the hung ceiling is used as a plenum chamber for either supply or return air for the air conditioning system shall be designed, manufactured and wired to conform to NEC Article 300-22.

2. When specified, fluorescent luminaires shall have radio frequency interference (RFI) or electromagnetic interference filters. Filters shall either be integral or external to the ballast, but must be integral to the luminaire assembly with one filter per ballast and shall suppress electromagnetic interference in the AM radio band from 500 to 1700 kHz. Filters shall also be in the circuit serving the lighting fixture.

O. Solid State Lighting / Light Emitting Diode (LED) Lamps and Luminaires:

DocuSign Envelope ID: 330DEBD6-9A9E-4F34-BDCC-1AC1BAA701E9

1. General:
    a. Luminaire manufacturer shall have a minimum of five (5) years experience in the manufacture and design of LED products and systems and no less than one hundred (100) North American installations.
    b. Unless otherwise specified, all LED luminaires and power/data supplies shall be provided by a single manufacturer to ensure compatibility.
    c. All components, peripheral devices and control software are to be provided by and shall be the responsibility of a single entity. All components shall perform successfully as a complete system and shall operate as described in Lighting Designer's Control Narrative documents or the Lighting Fixture Schedule at the end of this section.
    d. Provide submittals as described in Part 1 above.
    e. Provide two (2) samples of each separate manufacturer and type of LED luminaire. Follow procedure for submitting samples as described in Part 1 above.
    f. Include all components necessary for a complete installation. Provide all power supplies, synchronizers, data cables, and data terminators for a complete working system.
    g. All LED sources used in the LED luminaire shall be of proven quality from established and reputable LED manufacturers and shall have been fabricated after 2007. Acceptable LED lamp manufacturers unless otherwise noted are:
        1) Cree, Inc.
        2) Philips Lighting
        3) Nichia Corporation
        4) Norlux
        5) Opto Technology, Inc.
        6) Osram Optronic Semiconductors
        7) Xicato
2. Replacement and Spares:
    a. Manufacturer shall provide written guarantee of the following:
        1) Manufacturer will keep record of original bin for each LED module and have replacement modules from the same bin available for three (3) years after date of installation.
        2) Manufacturer will keep an inventory of replacement parts (source assembly, power and control components).
        3) Manufacturer's LED system will not become obsolete for ten (10) years: Manufacturer will provide exact replacement parts, or provide upgraded parts that are designed to fit into the original luminaire and provide equivalent distribution and lumen output to the original, without any negative consequences.
    b. All parts of system shall replaceable in field. Manufacturer shall provide written guarantee of the following:
        1) Manufacturer has in place a written recycling and re-use program, and will accept returned product and/or components for recycling or re-use.
        2) Manufacturer will properly dispose of non-recyclable components that are deemed harmful to the environment.
    c. System shall carry a full warranty for five (5) years. Manufacturer shall be responsible for cost of labor and cost of shipping, to replace any component of the system that fails within 2 years of installation.
3. Products and Components – Performance
    a. LED luminaires and components shall be UL listed or UL classified.
    b. LED luminaires and components shall be CE certified.
    c. LED luminaires and components shall be PSE marked.

DocuSign Envelope ID: 330DEBD6-9A9E-4F34-BDCC-1AC1BAA701E9

d. All LED luminaires shall be subjected to the following JEDEC Reliability Tests for Lead-free Semiconductors: HTOL, RTOL, LTOL, PTMCL, TMSK, Mechanical Shock, Variable Vibration Frequency, SHR, Autoclave.
e. To ensure luminaire quality, luminaire shall have been tested under accelerated life test conditions including an operating temperature span of 360 degrees F, and cyclic loading up to 60G.
f. All products included in system shall use Mil-Std 810F, Random Vibration 7.698g as a minimum standard. In installations subject to vibration, luminaire shall be installed with vibration isolation hardware to sufficiently dampen vibrations.
g. All LED components shall be mercury and lead-free.
h. All manufacturing processes and materials shall conform to the requirements of the European Union's Restriction on the Use of Hazardous Substances in Electrical and Electronics Equipment (RoHS) Directive, 2002/95/EC.
i. LEDs shall comply with ANSI/NEMA/ANSLG C78.377-2008 – Specifications for the Chromaticity of Solid State Lighting Products. Color shall remain stable throughout the life of the lamp. Color shall match approved sample.
j. LEDs shall comply with IESNA LM-80 – Standards for Lumen Maintenance of LED Lighting Products
k. White LEDs shall have a rated source life of 50,000 hours under normal operating conditions. RGB LEDs shall have a rated source life of 100,000 hours. LED “rated source life” is defined as the time when a minimum of 70% of initial lumen output remains.
l. Luminaire assembly shall include a method of dissipating heat so as to not degrade life of source, electronic equipment, or lenses. LED luminaire housing shall be designed to transfer heat from the LED board to the outside environment. Luminaire housing shall have no negative impact on life of components.
m. Manufacturer shall supply in writing a range of permissible operating temperatures in which system will perform optimally.
n. High power LED luminaires shall be thermally protected using one or more of the following thermal management techniques: metal core board, gap pad, and/or internal monitoring firmware
o. LEDs shall be adequately protected from moisture or dust in interior applications.
p. For wet and damp use, LED-based luminaires itself shall be sealed, rated, and tested for appropriate environmental conditions, not accomplished by using an additional housing or enclosure. Such protection shall have no negative impact on rated life of source or components, or if so, such reductions shall be explicitly brought to the attention of the designer.
q. All hardwired connections to LED luminaires shall be reverse polarity protected and provide high voltage protection in the event connections are reversed or shorted during the installation process.
r. The LED luminaire shall be operated at constant and carefully regulated current levels. LEDs shall not be overdriven beyond their specified nominal voltage and current.
s. RGB LED luminaires shall utilize an equal combination of high brightness red, blue and green LEDs, unless otherwise noted, to provide up to 16.7 million additive RGB colors and shall be capable of at least 8-bit control.
t. Manufacturer shall be able to provide supporting documentation of the product meeting third party regulatory compliance.
u. Manufacturer shall ensure that products undergo and successfully meet appropriate design and manufacturability testing including Design FMEA, Process FMEA, Environmental Engineering Considerations and Laboratory Tests, IEC standards and UL/CE testing.

DocuSign Envelope ID: 330DEBD6-9A9E-4F34-BDCC-1AC1BAA701E9

v. All LED luminaires (100% of each lot) shall undergo a minimum twenty-four (24) hour burn-in during manufacturing, prior to shipping.
w. Manufacturer shall provide Luminaire Efficacy (lm/W), total luminous flux (lumens), luminous intensity (candelas) chromaticity coordinates, CCT and CRI. optical performance, polar diagrams, and relevant luminance and illuminance photometric data. Provide data in IES file format in accordance with IES LM-79-2008, based on test results from an independent Nationally Recognized Testing Laboratory.
x. Power / data supply shall have the following:
1) Supply outputs shall have current limiting protection.
2) Supply shall provide miswiring protection.
3) Supply shall have power factor correction.
4) Supply shall provide connections that are conduit-ready or clamp-style connections in the case of low-voltage wiring.
5) Supply shall come with a housing that meets a minimum IP20 rating for dry location installation unless located in a damp or wet location.
6) Supply shall be UL listed for Class 1 or Class 2 wiring

4. LED Control and Communication – Performance
a. LED luminaires shall be network controllable via digital control.
b. The LED system shall use integral and differential non-linear control.
c. Constant data transmission rates shall be employed, resulting in the output being independent of distance of cable between power supply and light source within the specified length.
d. LED system shall have a selectable means of external control via a data network.
e. Each LED luminaire and/or node shall have the capability to be set to a unique and individual address. Address shall be selectable through on board switches or by an external hardware or software method.
f. The LED system shall be scalable, with every LED luminaire/address in the system capable of being controlled by a single, centralized controller.

P. Wiring:
1. Voltage Rating
a. For voltages up to 120 volts fixture wiring shall be rated for 300 volts minimum.
b. For voltages above 120 volts fixture wiring shall be rated for 600 volts minimum.

2. Temperature Rating - Internal to Fixture
a. All wiring shall be code-approved for fixture wiring, and shall comply with the following temperature ratings unless fixture design or local codes require higher temperature wire.
b. Incandescent
1) minimum rated between lampholder(s) and separately mounted junction box or internal transformer.
2) minimum rated between internal transformer and separately mounted junction box.
3) Tungsten-halogen lamp seal temperature shall not exceed 350°C at ambient of 25°C when tested per UL Bulletin 57, Par. 328-334. Submit certified heat test data by independent testing laboratory.
c. Fluorescent
1) minimum rating between lampholder(s) and internal ballast.
2) minimum between ballast and separate junction box, or connection within integral wireway.
d. High Intensity Discharge
1) minimum rating between lampholder(s) and separate junction box or connections with ballast components.
2) minimum rating between core and coil ballast components and separate junction box.

DocuSign Envelope ID: 330DEBD6-9A9E-4F34-BDCC-1AC1BAA701E9

3) minimum rating between encased and potted ballast components and separate junction box.

3. Temperature Rating - External to Fixture
   a. All flexible cord wiring between fixture components or to electrical receptacle and not in wireways shall have a minimum temperature rating of 105°C.
   b. Cord type shall be suitable for application and shall be fitted with proper strain relief and watertight entries where required by application.
4. Splices
   a. Splices internal to fixture shall be made within separate splice compartments and shall utilize nylon insulated crimped connections or insulated quick disconnects.
   b. Splices to branch circuit wiring in separate junction boxes shall utilize flame retardant thermoplastic caps with fully seated helical metal spring and threaded entry.
5. No internal wiring shall be visible at normal viewing angles, i.e., above 45° from vertical. Use additional wire clamps if necessary. Anticipate increased visibility if fixtures are mounted on or recessed within a sloping surface.
6. Any fixture fed from more than one panel, i.e., for normal and night or emergency operation, shall have separate neutrals to each panel.
7. Furnish code-approved wiring in ceiling cavities forming air plenums.

Q. Lamps:
1. Hot cathode fluorescent lamps:
   a. Shall be 3000° or 3500° Kelvin, with 85 CRI or greater except as shown. Refer to the Lighting Fixture Schedule at the end of section for details.
   b. All lamps, except as specified, shall be of the same manufacturer:
      1) General Electric
      2) North American Philips
      3) Osram/Sylvania
   c. T8 fluorescent lamps shall be of the “high performance” or “super” T8 type with extended lamp life and low mercury content.
      1) Four foot long 32 watt lamps shall have an initial lumen output of 3100 lumens, minimum.
      2) Four foot long lamps shall have a mean efficacy of 92 mean lumens per nominal wattage, minimum.
      3) Four foot long lamps shall have a rated lamp life of 24,000 hours or greater based on 3 hours per start if operated in rapid start mode.
      4) Mercury content in lamps shall be TCLP-compliant.
      5) Lamp lumen depreciation shall not be less than 92% of initial lamp lumens at 20,000 hours rated lamp life.
      6) Ballasts used with these lamps shall be a NEMA Premium electronic ballast, no substitutions allowed.

PART 3 – EXECUTION

3.1 SHIPPING AND STORAGE

A. All fixtures received at the site shall be stored in clean and dry space until fixtures are installed.
B. Manufacturer shall clearly mark each box with fixture designation prior to shipping.
C. Reflector cones, baffles, louvers, aperture plates, and decorative elements of fixtures shall be packed by the manufacturer separate from the housing (body, stem, etc.) of the fixture.
D. Each luminaire must have the following permanently marked inside the unit and outside of its packaging box:
1. Manufacturer’s name
2. Trademark
3. Model number

DocuSign Envelope ID: 330DEBD6-9A9E-4F34-BDCC-1AC1BAA701E9

4. Serial number
5. Month and year of manufacture
6. Lot number
7. Contract number
8. Rated Voltage
9. Rated Wattage
10. Rated power in VA

3.2 LOCATION

A. Locations of fixtures are shown diagrammatically. Verify exact location and spacing with Reflected Ceiling Plans and other reference data before ordering of fixtures and during installation.
B. Notify Architect about field conditions at variance with Contract Documents before commencing installation.
C. Coordinate space conditions with other trades before ordering of fixtures.
D. Pendant mount, as approved, surface type fixtures where required to meet space conditions.
E. Coordinate length of continuous-run fluorescent fixtures with adjacent walls, partitions, coffers and other architectural elements as required.
1. Continuous runs shall be defined as the optimal combination of 3’ and 4’ lamp length as necessary to complete runs with no more than 6” of free space at either end of the run as provided by the contractor.

3.3 INSTALLATION

A. Provide accessories as required for ceiling construction type indicated on Finish Schedule. Fixture catalog numbers do not necessarily denote specific mounting accessories for type of ceiling in which a fixture may be installed.
B. Provide adequate and sturdy support for each lighting fixture. Contractor shall be responsible for verifying weight and mounting method of all fixtures and furnish and install suitable supports. Fixture mounting assemblies shall comply with all local seismic codes and regulations.
C. Install rows of fixtures accurately on straight lines unless otherwise indicated on drawings. Coordinate with mechanical work.
D. Install fixtures with vent holes free of air blocking obstacles.
E. Where plaster ceilings occur, furnish plaster frames for setting under other applicable sections. Direct the setting and be responsible for correct location; make sure the bottom of frame is flush with finished ceiling, forming screed edge for finished plaster.
1. Fixtures shall be supported by plaster frames utilizing yokes or leveling lugs.
    a. Fixtures and support elements shall not be mounted to or in contact with ducts or pipes.
    b. Yoke shall have channel cross section of sufficient gauge, and shall support a fixture by means of not fewer than two (2) bolts each.
2. If air diffusers are located in common continuous rows with lighting fixtures in plaster ceilings, furnish plaster frames of proper length to accommodate diffusers.
3. Lighting fixtures recessed in ceilings which have a fire resistive rating of one hour or more shall be enclosed in a box which has a fire resistive rating equal to that of the ceiling.
F. Contractor shall be responsible for adjusting aperture rings on all ceiling recessed fixtures to accommodate various ceiling material thickness. Contractor shall responsible for coordinating the cut-out size in ceiling to ensure aperture covers cut-out entirely. The bottom of aperture rings shall be flush with finished ceiling or not more that 1/16" above. Under no circumstances will the aperture ring extend below the finished ceiling surface.
G. For fixtures with variable position lampholder assemblies Contractor shall confirm prior to installation proper lampholder (socket) position in field, and shall adjust, if necessary, after coordination with manufacturer.
H. Surface Mounted Fixtures: Support surface mounted fixtures from structural members other than ceiling tees.

DocuSign Envelope ID: 330DEBD6-9A9E-4F34-BDCC-1AC1BAA701E9

I. Pendant Mounted Fixtures:

1. Pendant mounted fixtures shall be supported from structural framework of ceiling or from inserts cast into slab.
2. All pendants shall have swivel aligners located at the top ends; pendants shall be 1/2" rigid steel conduit unless specifically indicated otherwise on drawings or in specifications.
3. All fluorescent pendant and surface mounted fixtures shall be supported with two (2) supports per four foot section or three (3) per eight foot section unless otherwise recommended by manufacturer.

J. Bracket Mounted Fixtures: For each bracket fixture, provide flanged metal stem attached to outlet box, with threaded end suitable for supporting the fixture rigidly in design position. Flanged part of fixture stud shall be of broad base type, secured to outlet box at not fewer than three (3) points.

K. Top Relamping Fixtures: Top relamping fixtures shall have the necessary top-relamping screws loosened and moderately tightened, prior to installation, to assure ease of operation when relamping is required.

L. Fluorescent Fixtures: Replace noisy ballasts as directed, at no cost to the Owner.

M. High Intensity Discharge Fixtures: Replace noisy ballasts as directed, at no cost to the Owner.

N. Solid State Lighting / Light Emitting Diode (LED) Fixtures:

1. Color Changing or Programming Support
   a. Provide installation and commissioning support to the electrical contractor as required to achieve a complete and operational system that meets the intent of the Control Narrative.
   b. In addition to the above, provide a factory representative for field calibration and programming in the presence of the Lighting Designer. Number of days to be determined based on system requirements.

O. Mask the trims and bottoms of all lighting fixtures if necessary to protect the fixture during construction.

P. At the completion of construction clean the bottoms, the trim, the reflecting surfaces, lenses, baffles, louvers and reflector cones of all lighting fixtures so as to render them free of any material, substance or film foreign to the fixture. If the luminaires are deemed dirty by the Architect at the completion of the project, the Contractor shall clean them at no additional cost to the Owner. Luminaire components whose finishes are damaged shall be replaced at no cost to the Owner.

Q. Ascertain and ensure that all lamps installed are exactly as specified for each fixture type.

R. Replace all burned-out or inoperative lamps, and inoperative ballasts in all high intensity discharge and fluorescent fixtures before the building is accepted by the Owner so that all lighting fixtures will be in first-class operating condition.

S. Re-lamp all specified H.I.D. fixtures used as construction work lights with new specified lamps. No H.I.D. lamps shall have a burning hours difference which exceeds forty (40) hours.

T. Re-lamp all specified incandescent fixtures used as construction work lights with new specified lamps. No incandescent lamps shall have a burning hours difference which exceeds forty (40) hours.

U. Provide labor and materials for final aiming of all adjustable fixtures under the Architect's supervision. Aiming shall take place immediately before building is turned over to Owner, after regular working hours where required.

DocuSign Envelope ID: 330DEBD6-9A9E-4F34-BDCC-1AC1BAA701E9

Type	Description	Location	Mfr / Catalog No.	Finish	Lamping	Electrical Data	Notes
F1	4" wide recessed (2) lamp T5 linear fluorescent downlight with lens and MR16 LED downlight. Fixture shall be comprised of two 4' fluorescent units with downlight units at each end and one unit in the center.	Open Area Multipurpose & Office	Axis-Beam 4 BBR-F-FL-*LENGTH*-NL4-T5-2+S-M16LED-W-120-D-2-Mounting/suspension-B#-feed-*IC CONTROLS*	White	(2)T5 X-Section Osram Sylvania: FP28/830/ECO 2420 mean lumens Soraa VIVID 12.2W MR16LED MR16-50-B01-12-930-36 (Compatibility Test Report pending by Fixture and Lamp Manufacturers)	Integral HPF Electronic Lutron 10% Dimming Ballast or equal Input Watts: 32/4' Integral Electronic Transformer (dimmed) suitable for LED wattage	1. Contractor to verify and coordinate fixture installation and mounting with architectural details, housing type, field conditions, and ceiling system details including grid type and flange requirements. Contractor shall verify maximum ceiling thickness allowed by trim and inform factory if ceiling is thicker than allowed. 2. Contractor to provide battery pack, daylight/occupancy sensors as required per electrical drawings. 3 Note that there is 2 lamps in cross section for the FL portion. 4. Provide appropriate dimming system interface based on load type. Provide appropriate dimmer and transformer. Contractor to confirm LED dimming compatibility. 5. Fixture to be connected to (2) circuits: one for fluorescent and one for LED module. 6. Provide manufacturer's to-scale shop drawings showing all materials, finishes and components for Lighting Designer and Architect review prior to fabrication. 7. Provide wattage restriction label for the MR16 LED lamp and appropriate transformer based on lamp as specified - fixture to comply with UL 1598 wattage restriction label inside socket - maximum lamping wattage 12.2 watts for the MR16 LED portion of the luminaire.
F2	2.5" dia. recessed LED adjustable downlight with flood distribution (40 degree tilt, 365 rotation).	Restrooms	USA Illumination LN10RAT-BV or WV-MTG120-30KS -LRNT425-10-LNC61 (TBC)-120-SOFD -accessories	White Trim	(1) 20W LED module 1250 lumens 80+CRI	Integral Power Supply Input Watts: 20 Delivered lumens: 952 (80CRI)	1. Provide Solite Diffusion Lens. 2. Contractor to coordinate fixture installation with ceiling system details including grid type, flange requirements and field conditions. In some locations fixture is mounted in ceiling slot, refer to architectural drawings for mounting information. 3. Contractor shall verify maximum ceiling thickness allowed by downlight trim and inform factory if ceiling is thicker than allowed. 4. Adjustable fixture to have lock-down mechanism. 5. Fixtures require aiming by lighting consultant after installation. Contractor to coordinate personnel and equipment necessary for aiming session.
F2d	2.5" dia. recessed LED adjustable downlight with flood distribution (40 degree tilt, 365 rotation) Same as F2, except dimmed	Open Area Multipurpose	USA Illumination LN10RAT--BV or WV-MTG120-30KS -LRNT425-10-LNC61 (TBC)-Voltage-LLFD or SOFD -DIML2	White Trim	(1) 20W LED module 1250 lumens 80+CRI	Integral 0-10V dimmable driver, 10% dimming Input Watts: 20 Delivered lumens: 952 (80CRI)	1. Provide Diffused Linear Lens or solite lens - selection to be determine. 2. Contractor to coordinate fixture installation with ceiling system details including grid type, flange requirements and field conditions. In some locations fixture is mounted in ceiling slot, refer to architectural drawings for mounting information. 3. Contractor shall verify maximum ceiling thickness allowed by downlight trim and inform factory if ceiling is thicker than allowed. 4. Adjustable fixture to have lock-down mechanism. 5. Fixtures require aiming by lighting consultant after installation. Contractor to coordinate personnel and equipment necessary for aiming session. 6. Provide appropriate dimming system interface based on load type.
F3	Surface mounted fluorescent strip light with staggered lamp within Architectural cove detail.	Restrooms	Birchwood-WP System WP-T5-1STSAS-*LENGTH*-HRW-120-EB-options	High Reflectivity white	(1)T5 X-Section Staggered Osram Sylvania: FP28/830/ECO 2420 mean lumens FP21/830/ECO 1770 mean lumens	Integral HPF Electronic Ballast. Program Start Input Watts: 32/4'	1. Contractor to provide lengths as necessary to complete runs. Do not allow more than a maximum of 4" at either end of cove. Provide a combination of 3' and 4' lamps. 2.Provide continuous runs per arhitectural drawings and field conditions. 3. Contractor shall field verify each run lengths prior to ordering. 4. Refer to architectural drawings for mounting information. 5. Provide one telescoping fixture per run. Field stagger units a minimum of 3" to maximum of 6" prevent socket shadows, verify manufacturer recommendations. Allow no more than 4" free space at either end of run. 6. Light fixture to be concealed in architectural cove. Refer to architectural drawings for details. Fixture to be aligned to top of cove. Interior of coves surfaces to be painted matte white.

DocuSign Envelope ID: 330DEBD6-9A9E-4F34-BDCC-1AC1BAA701E9

Type	Description	Location	Mfr / Catalog No.	Finish	Lamping	Electrical Data	Notes
F4	Recessed nominal 4.5" aperture lensed 10W LED downlight with 50 degree distribution.	Restrooms	USA Illumination 3020-10-LRTD4/9010-C1-30K-50-NC-120V-Accessories During construction fixture revised: Iris P3 LED - 9-FL40-830-volts-E3MR-H-finish-flange white -RG50MH - beam softener and accessory holder 8/15/15	White Trim	10W Replaceable LED module by Manufacturer 3000K +/- 100K CCT 80+CRI 50,000hr+ L70 950 initial fixture lumens Iris: 20W Replaceable LED module by Manufacturer 3000K 85+CRI 50,000hr+ L70 900 nominal fixture lumens 8/15/15	Integral electronic power supply - Input watts: 10W Efficacy: 47 System Lumens per Watt Iris: 20 watts (8/15/15)	1. Fixture to be U.L. listed and rated for "damp locations". 2. Contractor to verify and coordinate fixture installation and mounting with architectural details, housing type, field conditions, and ceiling system details including grid type and flange requirements. Contractor shall verify maximum ceiling thickness allowed by trim and inform factory if ceiling is thicker than allowed.
F5	Surface mounted fluorescent T5 strip light with staggared lamps within Architectural cove	Blue Cove at corridor	Birchwood-WP System WP-T5-1STSAS-*LENGTH*-HRW-120V-EB-dimming-options Lee Filter - "Blue" T5 sleeve and filter TBD per mockup	High Reflectivity white	(1)T5 X-Section Staggered Osram Sylvania: FP28/841/ECO 2600mean lumens FP21/840/ECO 1900 mean lumens	Integral Electronic Lutron 10% Dimming Ballast or equal Input Watts: 32/4'	1 to 6. Refer to F3 notes. 7. Provide appropriate dimming system interface based on load type. Provide appropriate ballast based on dimming system. 8. Contractor to coordinate 3'-0" or 4'-0" T5 lamps for a continuous run. Allow no more than 4" gap from end walls. 9. Blue lamp sleeve and filter are being considered and to be determined based on a mockup. Contractor to allow for lamp sleeve and filter as a separate line item.
F6	Track mounted adjustable 39W LED accent light	Gallery	Lighting Service Inc. LSI LumeLEX 2026-H or G-3 (color temperature)-M1 (10 degree or M2 (20 degree) (reflector)-00-S-(accessories) See reflector accessories allowance under notes.	Silver	40W LED Module (By Manuf.) 1800 initial lumens 3000K 80+ CRI 50,000hr+ L70	Integral Electronic Power Supply ELV dimming Input Watts: 39	1. Provide 70% of project with 10 degree distribution and 30% with 20 degree distribution. Allow another 30% of other distributions, to be determined. 2. Fixture is mounted on type F6T track. 3. Provide appropriate dimming system interface based on load type. 4. Allow for two (2) lens accessories per fixture and one hood accessory. Final accessories to be determined based on artwork. 5. Fixtures require aiming by lighting consultant after installation. Contractor to coordinate personnel and equipment necessary for aiming session. 6. Fixture to be on dimmed circuit, provide appropriate dimming system interface based on load type. Electrical contractor shall confirm that power supply type and dimmer type are compatible prior to installation. 7. Fixtures along the North Window Signage only require "M2" (20deg) reflectors and "990" (5x50deg) lens.
F6a	Similar to Type F6 but monopoint mounted with a narrow elliptical distribution	Gallery North Egress Path	Lighting Service Inc. LX2026-H-3-M2-5A-FINISH LX2024-Holder 990 Spread Lens 5x50deg	Black/ White/ Silver	40W LED Module (By Manuf.) 1800 initial lumens 3000K 80+ CRI 50,000hr+ L70	Integral Electronic Power Supply Input Watts: 39	1. Fixture mounted to junction box (by others). Fixtures will be 30" wall-arm mounted with tie-back. 2. Refer to electrical drawings for all emergency requirements. 3. Fixtures require aiming by lighting consultant after installation. Contractor to coordinate personnel and equipment necessary for aiming session.
F6T	Surface mounted single circuit track system	Gallery	Lighting Service Inc. 31010/31020/31030 Surface mounted track-silver-120v - accessories and track components are required by contractor	Silver	Allow 50W per LF	N/A	1. Contractor to provide all necessary lengths, feeds, connectors, supports, and other components for complete and code compliant installation. 2. Refer to architectural drawings for track run length. Provide final lenghts based on field conditions. 3. Manufacturer to submit a layout drawing for run lengths specified on architectural drawings during shop drawing review for lighting designer and architect approval prior to fabrication.
F7	Surface-mounted continuous LED undercabinet light, fixtures are to be connected end to end for continuous mounting.	Kitchenette	Tech Lighting 700UCF-LENGTH-9-3-W-LED 700UCSB-W, 700UCJC-LENGTH-W As Required-120v	White (concealed behind fascia)	6.5W/ft Remote Phosphor LED by Manufacturer 80+ CRI 3,000K CCT + 75K 50,000hr+ L70	Integral Electronic Power Supply Input Watts: 8/ft 120V Only	1. Modular units to be field-installed for a continuous run condition as shown on drawing. Refer to architectural drawings for length of continuous runs. 2. Contractor shall field verify each run lengh prior to ordering. 3. Contractor to provide optimal combination of lengths as necessary to complete runs. Allow no more than 4" free space at either end of run. 4. Provide single switch per run. 5. Fixture shall be ordered with necessary power supplies, drivers, quick connects and power feeds for installation of a complete system. 6. Contractor shall coordinate mounting with millwork details. 7. Provide cabinet fascia to conceal view of undercabinet light fixture.

DocuSign Envelope ID: 330DEBD6-9A9E-4F34-BDCC-1AC1BAA701E9

Type	Description	Location	Mfr / Catalog No.	Finish	Lamping	Electrical Data	Notes
F8	Surface mounted linear LED strip concealed within architectural cove at base of wall.	Under gallery wall	Luminii-Kendo 45M K45M-*LENGTH*-29K-SO-H-F-WH-B-*POWER FEED as required LL2.4-H-29k-length-Section Start-Section End	White	~2.4W/ft LED module 315 Lumens/ft 2900K + 75K CCT 80-91 CRI	Remote Electronic Power Supply Primary: 120V Secondary: 24V Input Watts: 3.2W/ft	1. Contractor to verify and coordinate fixture installation and mounting with architectural details, housing type, field conditions, and millwork details. 2. Refer to architectural drawings for length of continuous runs and for mounting details. Contractor shall field-verify each run length prior to ordering. Contractor to provide lengths as necessary to complete runs. Allow no more than 2" free space at either end of run. 4. Overlap fixture lens with aluminum extrusion to keep extrusion aligned whenever extrusions are installed in a continuous run with multiple extrusion units. 5. Locate remote power supplies in a secure, concealed, accessible and well ventilated location in compliance with manufacturer's recommendations. 6. Contractor & manufacturer to coordinate power supply size and wire gauge to limit voltage drop to ≤2% over entire length of run. 7. Contractor to coordinate conduit entry based on final fixture details and architectural conditions and to provide lead cables and quick connects as required.
Existing	Existing Pendant fixture to be refurbished	Open Area Multipurpose			Lamping to be determined 82+ CRI LED or Compact FL	Electronic ballasts to be coordinated by Contractors per existing conditions and Arch. Dwgs.	1. Contractor to coordinate wiring with existing fixtures and mounting conditions. 2. Fixtures to be rewired and UL listed to current requirements. 3. Contractor to advise lighting designer of condition of existing luminaires upon which a lamping recommendation is to be made. Contractor to allow for time to install at least three lamp samples for review. 4. Contractor to clean fixtures and to ensure that fixtures are in operable conditions. 5. Contractor to advise Architect before refinishing fixture.
FX1	Existing Exterior wall surface mounted downlight with "RLM" shade, new arm and canopy with flat plate canopy and remote ballast and emergency battery	East and North Exterior	Baselite WM13 Wall Mount	49 Galvanized	42WCFL Osram Sylvania: CF42DT/E/IN830/ECO	Remote electronic HPF ballast and Emergency Battery	1. Contractor to coordinate mounting with existing conditions per Arch. Dwgs. Fixtures on East side are being mounted at existing locations, contractor to coordinate wiring requirements. 2. Contractor to coordinate wiring, remote emergency ballasts and locations with Electrical Engineer and Electrical Drawings. 3. Fixture to be UL listed and labeled suitable for wet locations. 4. Fixture was provided with "Larger Back Up Place (Plate?)" which combined with canopy-integral ballast compartment is not acceptable. Provide new standard flat canopy and arm over recessed junction box for existing fixture. Contractor to confirm mounting with manufacturer. 5. Locate remote ballast and emergency battery in a secure, concealed, accessible and well-ventilated location in compliance with manufacturer's directions.
FX2	Surface mounted linear LED strip light with internal matte black louvers mounted at Architectural canopy.	Exterior Canopy	Electrix L140W-10-length-W3-60M-V-cables-custom color PS96-W	Custom Exterior Marine Grade Paint TBD by Architect	10W/ft LED module 516 Lumens/ft 3000K	Remote Electronic Power Supply 120V Input Watts: 10W/ft	1. Exterior grade custom paint to be selected by Architect. Paint finish shall be marine grade. 2.Contractor to coordinate remote power supply at accessible and ventilated locations. 3. Refer to architectural drawings for length of continuous runs. Contractor shall field-verify each run length prior to ordering. 4. Contractor to provide leader feed cables as required for a complete installation. 5. Fixture to be UL listed and labeled suitable for wet locations. 6. Locate remote power supplies in a secure, concealed, accessible and well ventilated location in compliance with manufacturer's recommendations. 7 Contractor & manufacturer to coordinate power supply size and wire gauge to limit voltage drop to ≤2% over entire length of run. 8. Contractor to coordinate conduit entry based on final fixture details and architectural conditions.

DocuSign Envelope ID: 330DEBD6-9A9E-4F34-BDCC-1AC1BAA701E9

Type	Description	Location	Mfr / Catalog No.	Finish	Lamping	Electrical Data	Notes
FX3	Surface mounted IP68 rated submersible adjustable LED linear light within Architectural details.	Below glass floor	Boca Flasher-HPNLS-Lo HPNLS-Lo8-3000K-120V+D73*-A-W-S-D-SI	Marine grade painting for salt water submersion	~13W/ft LED module ~372 Lumens/ft 3000K + 75K CCT 90+ CRI	Integral Electronic Power Supply 120 or 277 Input Watts: 17W/ft	1. Provide marine grade paint finish for salt water submersion. Fixture IP68 rated up to 6 hour water immersion. Manufacturer to provide documentation for Owner's record. 2. Contractor to verify and coordinate fixture installation and mounting with architectural details, housing type, field conditions, and ceiling details. 3. Refer to architectural drawings for length of continuous runs. Contractor shall field-verify each run length prior to ordering. 4. Fixture is mounted under the glass floor where water submersion for long periods of time is possible. Provide mounting and electrical components as required.
FX4	Pole-mounted LED area light, type III distribution, nominal 20' overall height, integral occupancy sensor dimming, wet-rated	Parking	Kim Lighting 1SA-ALT-3-P-35-60L-3K-VOLTAGE-FINISH-SCH PRA17.5-THICKNESS-[S]A-FINISH	Black/ Bronze/ Dark/Light Gray/ Silver/ White/ Custom	70W LED Module 3000K +/- 75K CCT 70+ CRI 50,000hr+ L70	Integral 0-10V-Dimmable Power Supply Input Watts: 70	1. Fixture to be U.L. listed and rated "Suitable for wet locations." 2. Refer to base and anchorage by Architect/Civil Engineer. Provide pole to meet local and AASHTO requirements for EPA of fixture configuration. Architect/Civil Engineer shall coordinate pole anchorage detail to concrete base. 3. Bottom of fixture to be mounted nominally 20' AFG, coordinate pole height with concrete base height. 4. Architect/Owner shall select pole and fixture finish. 5. Architect/Owner to determine if sign/banner hangers are required, configuration of sign hangers, and which poles require hangers. Pole manufacturer shall make provisions for hangers, should Owner or Architect require them.
FX5	Similar to Type FX4 but two heads	Parking	Kim Lighting 2SB-ALT-3-P-35-60L-3K-VOLTAGE-FINISH-SCH PRA17.5-THICKNESS-[S]A-FINISH	Black/ Bronze/ Dark/Light Gray/ Silver/ White/ Custom	(2) 70W LED Modules 3000K +/- 75K CCT 70+ CRI 50,000hr+ L70	Integral 0-10V-Dimmable Power Supply Input Watts: 140	1. Refer to Type FX4 Notes.
FX6	Wall-recessed LED shielded steplight, nominally 4.5"x2.5", wet-rated	Ramp	Winona Lighting LED-STEP11-RECT-L-30KHO-ND120V-277V-BSS-WL-STD	Brushed Stainless Steel	3.5W LED Module 3000K +/- 75K CCT 80+ CRI 50,000hr+ L70	Integral Power Supply Input Watts: 3.5	1. Fixture to be installed in recessed single-gang box (by others). Refer to architectural drawings for mounting height AFF. 2. Fixture to be U.L. listed and rated "Suitable for wet locations."
FX7	Surface-mounted LED ADA lensed wall sconce, wet-rated	East Drive	RAB Lighting ENTRA12YW	White	12W Integral LED 3000K +/- 75K CCT 80+ CRI 50,000hr+ L70	Integral Power Supply Input Watts: 14	1. Fixture to be installed over recessed junction box (by others). Refer to architectural drawings for mounting height AFF. 2. Fixture to be U.L. listed and rated "Suitable for wet locations."

GENERAL NOTES:

1. Provide all lighting fixtures as shown complete with all lamps, completely wired, controlled and securely attached to supports.
2. Where both narrative and/or pictorial fixture descriptions are provided, the written description shall take precedence and prevail.
3. The lighting fixtures and workmanship must be in accordance with and meet the standards and regulations of the following: a.) Underwriters Laboratories b.) National Electric Code c.)Local Building and Life Safety Code Agencies.
4. All fixtures and workmanship shall be guaranteed free of defects and fully operational for a minimum of one year after the acceptance of the project by the Owner. Any fixtures or workmanship (excluding lamps) found to be defective during the warranty period will be either fixed or replaced by the Contractor at no cost to the Owner
5. Locations of fixtures are shown diagrammatically. Verify exact location and spacing with Plans and designer at the site during installation. Notify Owner about field conditions at variance with Contract Documents before commencing
6. Provide adequate and sturdy support for each lighting fixture. Contractor shall be responsible for verifying weight and mounting method of all fixtures and furnish and install suitable supports. Fixture mounting assemblies shall comply with
7. At the completion of construction, clean lenses and reflectors of all lighting fixtures so as to render them free of any material, substance or film foreign to the fixture. Blemished, damaged, or unsatisfactory fixtures shall be replaced in a
8. Replace all burned-out or inoperative lamps, and inoperative ballasts in all fixtures before the building is accepted by the Owner so that all lighting fixtures will be in first class operating condition.
9. Contractor to review existing circuiting, verify new loads and panel capacity. Contractor shall notify Owner if a conflict between design documents and field conditions occur.
10. Electronic Program/Rapid Start linear fluorescent ballasts shall have parallel lamp wiring and anti-striation circuiting.
11. Contractor to verify compatibility of lamp/ballast/transformer and dimming system.
12. For all fixtures that are dimmed refer to electrical drawings for information on controls and dimming requirements. Provide appropriate dimming system based on load type. Contractor to provide all required components for a fully
13. Contractor to provide line item pricing per fixture type with labor and installation shown as line items.
14. Refer to electrical drawings for Voltage information.
15. Per section 16510 Part III/U: For all adjustable fixtures provide labor and materials for final aiming and locking of all adjustable fixtures under the Architect's supervision. Aiming shall take place immediately before building is turned over to
16. All fixtures with replaceable integral ballasts/power supplies to be provided with ballast/power supply disconnects for safe access to "hot" fixture.
17. Provide manufacturer's shop drawings showing all materials, finishes, lengths and components for Lighting Designer and Architect review prior to fabrication. Contractor to provide fully functioning fixtures and components.

END OF SECTION 99-265100

DocuSign Envelope ID: 330DEBD6-9A9E-4F34-BDCC-1AC1BAA701E9

BEAM4 RECESSED MOUNT

ÉCLAIRAGE axis LIGHTING
1.800.263.AXIS
[T] 514.948.6272
[F] 514.948.6271
www.axislighting.com

PROJECT INFORMATION

Project:

Type:

Notes:

DIMENSIONS

SECTION VIEWS

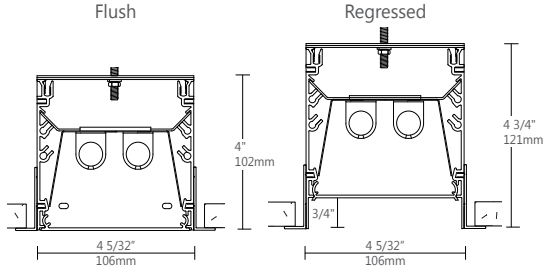

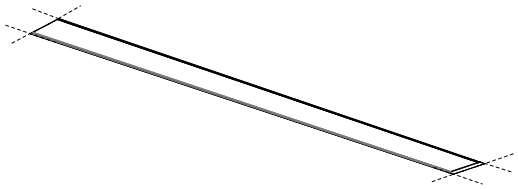

SHOWN WITH LENS OPTION

ORDERING CODE

1	2	3	4	5	6	7	8	9	10	11	12	13	14	15	16	17

PRODUCT SPECIFICATIONS

1	PRODUCT ID	2	OPTICS DIRECT	3	OPTICS POSITION	4	LENGTH/FT	5	SPECIFY LENGTH	6	LAMP
BBR	recessed	**S**	satin lens	**FL**	flush	**2**	2′	**NL**	nominal (3′ & 4′ lamps)	**T5**	T5
		F	frosted lens(1)	**RG**	regressed(2)	**3**	3′	**NL4**	nominal (4′ lamps only)	**T5HO**	T5HO
		PL	semi spec. para. louvers			**4**	4′	**EX**	exact (3′ & 4′ lamps)	**T8**	T8(3)
		SB	white solid baffles			**5**	5′	**EX4**	exact (4′ lamps only)		
		B	blank			**6**	6′				
						8	8′				
						12	12′				
						S#	System Run				
			(1) not recommended with staggered lamping		(2) Satin/frosted lens only						(3) requires 4 3/4" housing for t-bar

7	LAMP CONFIGURATION	8	MR	9	FINISH	10	VOLTAGE	11	BALLAST	12	CIRCUITS
0	0 lamp	**M16#**	MR 16 halogen	**W**	white	**120**	120V	**D**	dimming	**1**	1 regular
1	1 lamp	**M16LED#**	MR 16 LED	**C**	custom	**277**	277V	**E**	instant start	**2**	2 regular
2	2 lamps					**347**	347V(4)	**ERS**	rapid start	**2A/B**	2 alternating
+S	staggered					**UNV**	universal	**T**	step dimming(5)	**+E#**	emergency section
										+NL#	night light section
										+GTD#	generator transfer device
										+M	MR
			Add 9" per lamp				(4) Please consult factory		Use ballast guide for ballast specification (5) In T5HO, only available for 2x4′ lamp configuration		

13	MOUNTING/SUSPENSION	14	BATTERY	15	OTHER	16	IC CONTROLS	17	CUSTOM
TB9	t-bar 9/16"	**B#**	battery pack 4′ sections	**F**	fuse	**DS#**	daylight sensor	**C**	custom
TB15	t-bar 15/16"			**EF**	end feed	**OS#**	occupancy sensor		
ST	screw slot t-bar			**FW#**	flex whip (6′ std)	**DS+OS#**	daylight+occupancy sensor		
TG9	tegular 9/16"			**CP**	Chicago plenum	**DOS#**	daylight&occupancy sensor		
TG15	tegular 15/16"								
DF	drywall flange								
D	drywall flangeless								
DB	slip-through bracket								
DS	drywall spackle flange								
							See integrated controls guide for further details		Please specify

Ballast, Battery Pack and Integrated Control Details and Custom Description:

FILE NAME:BBR.SPEC January 28, 2013

Product design and development is an ongoing process at Axis Lighting. We reserve the right to change specifications. Contact Axis for the latest product information. © 2011 Axis Lighting Inc.

Project: IERBYS TEMPORARY IMPROVEMENTS
HLB Project #: 12141
Project ID 04-15000182

March 17th, 2015
Final Permit Set
265100-Lighting Fixtures, Lamps, Ballasts

Type: F1

LIGHTING CONTROL CUT SHEET Note: This document is for information only. Refer to specifications for all catalog numbers, etc.

DocuSign Envelope ID: 330DEBD6-9A9E-4F34-BDCC-1AC1BAA701E9

BEAM4 RECESSED MOUNT

ÉCLAIRAGE axis LIGHTING
1.800.263.AXIS
[T] 514.948.6272
[F] 514.948.6271
www.axislighting.com

CONSTRUCTION

Housing	Extruded Aluminum (0.075'' nominal) up to 70% Recycled Content
End Cap	Sheet Steel (18 ga)
Interior Brackets	Die Formed Sheet Steel (18 ga)
Reflectors	White Powder Coated Sheet Steel (22 ga)
Louvers	Die Formed Semi-Specular Aluminum (22 ga)
White Louvers	Die Formed Aluminum Painted White (22 ga)
Blank	Extruded Aluminum (0.075'' nominal)
Lenses	Extruded Acrylic (0.070'' nominal) Satin: 68% trans. Frosted: 85% trans.
T-Bar Bracket	Die Formed Sheet Steel (16 ga)
Screw Slot T-Bar Bracket	Die Formed Sheet Steel (16 ga)
Slip-Through Bracket	Die Formed Sheet Steel (18 ga)
Spackle Flange	Die Formed Perforated Sheet Steel (20 ga)
Flange	Extruded Aluminum (0.075'' nominal) visible flange width: 9/16"

WEIGHT

4 ft	14.5 lbs / 6.6 kg
8 ft	29.0 lbs / 13.2 Kg
12 ft	43.5 lbs / 19.7 Kg

SYSTEM (S#)

BEAM 4 linear systems, with the use of a strong profile, allow for a nearly hair thin connection system of continuous runs.
Lengths of 4', 8', 12' as well as custom lengths are available.
Runs of BEAM 4 that are greater than 12ft in length are designated as systems (S#). This means that the run is comprised of a combination 4ft, 8ft and/or 12ft sections to be assembled on site using our joining system. For more information on systems and joining, please refer to the BEAM installation sheets available for download at www.axislighting.com.

ELECTRICAL

Ballast	Electronic IS, Electronic Rapid Start, Dimming (0-10V, Line, Step, EcoSystem, DALI) with preinstalled ballast disconnect as per NEC & CEC
Emergency	Emergency battery pack or emergency circuit
Voltage	120V, 277V, 347V, UNV

Incorporating these components may have limitations or effect the length of the luminaire, please contact factory for more details.

FINISH

Powder Coated and custom finishes are also available.

APPROVALS

Certified to UL and CUL standards
Meets NYC requirements
Meets CCEC requirements (Chicago plenum)

JOINERS

In order to allow very long runs of BEAM luminaires, Axis has developed a number of different joining systems.
Special care has been taken to maximize the performance of the joiner for each BEAM option.

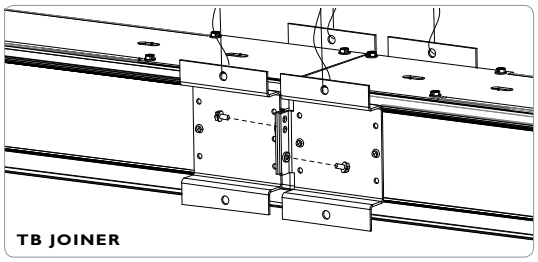

TB JOINER

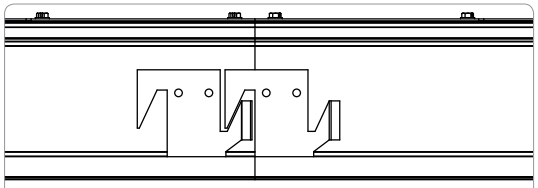

DRYWALL JOINER

NOTE: Hang each system segment individually.
Do not assemble system prior to hanging.

STAGGERED LAMPING

When the BEAM 4 is used in continuous runs longer than 4', staggered lamping can be used to eliminate the appearance of socket shadows at the ends of the lamps. The BEAM 4 uses a staggered overlap of 4 different bracket lengths (3.5", 4", 4.5" and 5"), along with 3' and 4' lamps, allowing us to match almost any row length requirements with optimal results. For example 3 x 3' T5 lamps can be used to completely illuminate the lens of an 8' luminaire.

LAMP TYPE	T5	T5HO	T8
1 lamp	●	●	●
2 lamps	●	●	●

Staggered 1 Lamp

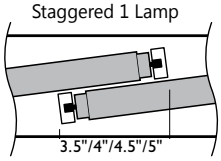

Staggered 2 Lamps

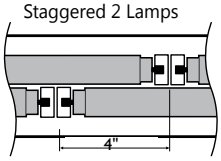

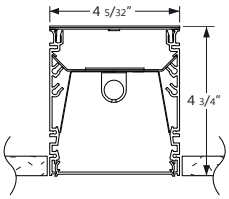

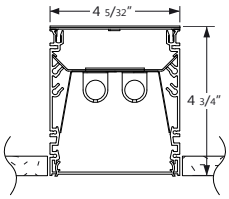

FILE NAME:BBR.SPEC January 28, 2013

Product design and development is an ongoing process at Axis Lighting. We reserve the right to change specifications. Contact Axis for the latest product information. © 2011 Axis Lighting Inc.

Project: IERBYS TEMPORARY IMPROVEMENTS
HLB Project #: 12141
Project ID 04-15000182

March 17th, 2015
Final Permit Set
265100-Lighting Fixtures, Lamps, Ballasts

Type: F1

LIGHTING CONTROL CUT SHEET Note: This document is for information only. Refer to specifications for all catalog numbers, etc.

DocuSign Envelope ID: 330DEBD6-9A9E-4F34-BDCC-1AC1BAA701E9

BEAM4 RECESSED MOUNT

ÉCLAIRAGE axis LIGHTING
1.800.263.AXIS
[T] 514.948.6272
[F] 514.948.6271
www.axislighting.com

OPTICS

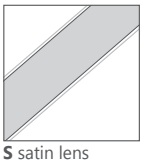
S satin lens

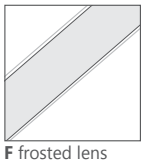
F frosted lens

SATIN & FROSTED LENS
(acrylic snap-in lens)
satin: 68% trans.
frosted: 85% trans.

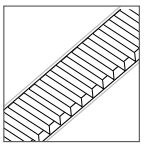
PL semi-specular parabolic louvers

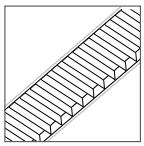
SB white solid baffle

LOUVERS
(semi-spec. parabolic louver/white solid baffle)
9/16'' deep blades – 5/8'' spacing
72 blades per 4'

CORNERS

Unlit Corners - BEAM4 features a multitude of layout patterns with the use of a number of corners, 90° corner, T or X junctions.

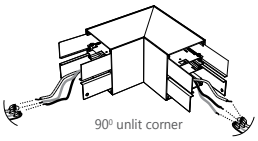
90º unlit corner

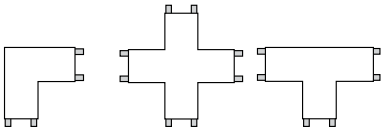
90° corner X junction T junction

Lit Corners - In addition Axis offers Lit 90° Corners including Ceiling to Ceiling, Wall to Ceiling and Ceiling to Wall.

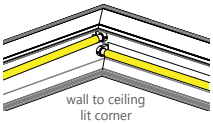
wall to ceiling lit corner

For custom corner angles, please consult factory. Specifications sheets for all corners are available at: www.axislighting.com

MR16

Blank	Extruded Aluminum (0.075'' nominal)
MR16 Halogens	2.0'' diameter (35W / 50W)
MR16 LED	2.0'' diameter
Quantity	For every 4' fluorescent lamp section, there may be up to a maximum of 4 x MR16 lamps.
Spacing	Each MR16 is placed centered on a blank section 9'' in length.

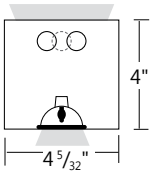

For a series of MR16's within a given section length, they will be spaced evenly on a longer blank section.
The directed light of MR16 Halogen lamps are fixed downward.
Custom spacing may be available on special request.

Between fluorescent lamps sections

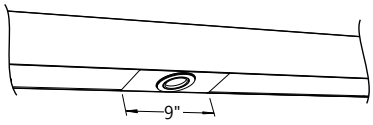

At luminare ends

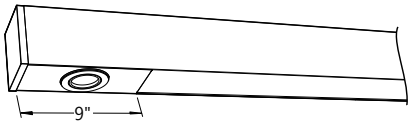

Several in a long blank section

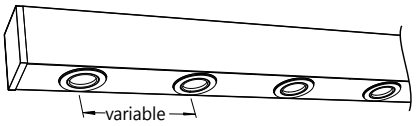

Product design and development is an ongoing process at Axis Lighting. We reserve the right to change specifications. Contact Axis for the latest product information. © 2011 Axis Lighting Inc.

Project: IERBYS TEMPORARY IMPROVEMENTS
HLB Project #: 12141
Project ID 04-15000182

March 17th, 2015
Final Permit Set
265100-Lighting Fixtures, Lamps, Ballasts

Type: F1

LIGHTING CONTROL CUT SHEET Note: This document is for information only. Refer to specifications for all catalog numbers, etc.

DocuSign Envelope ID: 330DEBD6-9A9E-4F34-BDCC-1AC1BAA701E9

BEAM4 RECESSED MOUNT

ÉCLAIRAGE axis LIGHTING
1.800.263.AXIS
[T] 514.948.6272
[F] 514.948.6271
www.axislighting.com

TB CEILING MOUNTING OPTIONS

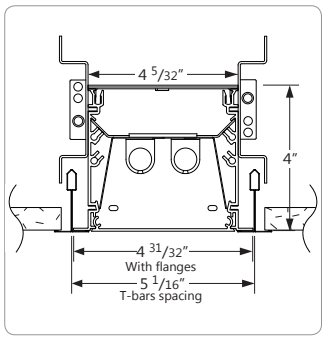

TB15 15/16" T-BAR

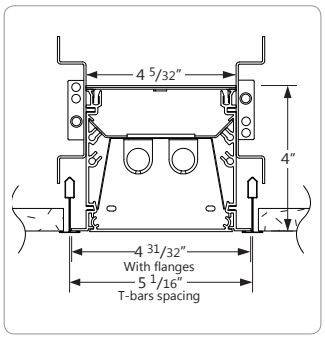

TB9 9/16" T-BAR

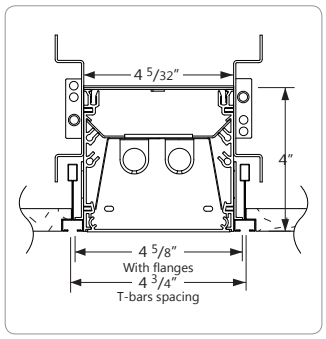

ST SCREW SLOT T-BAR

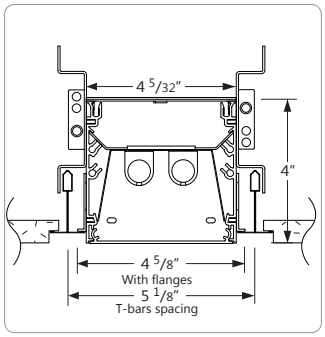

TG15 15/16" TEGULAR

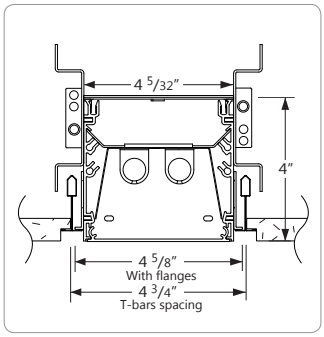

TG9 9/16" TEGULAR

DRYWALL CEILING MOUNTING OPTIONS

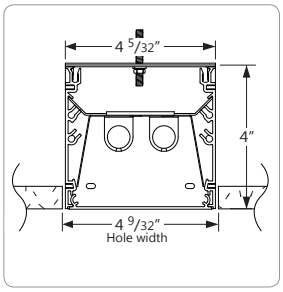

D FLANGELESS WITH 1/4-20 STUD MOUNTING

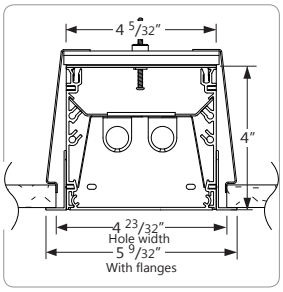

DB VISIBLE FLANGES WITH SLIP-THROUGH BRACKET

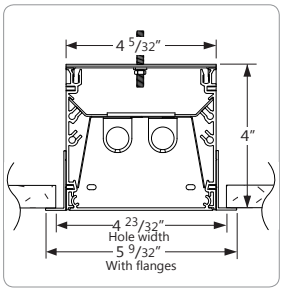

DF VISIBLE FLANGES WITH 1/4-20 STUD MOUNTING

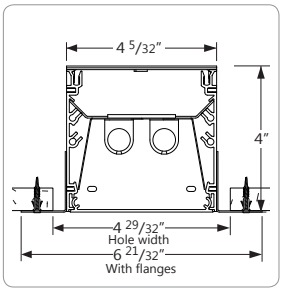

DS SPACKLE FLANGES

OTHER MOUNTING OPTIONS

BEAM 4 is also available with pendant, surface, wall, asymmetric, recessed wall and wall wash mounted options.

Specification sheets and Installation sheets for all mounting for BEAM luminaires are available for download at www.axislighting.com

Product design and development is an ongoing process at Axis Lighting. We reserve the right to change specifications. Contact Axis for the latest product information. © 2011 Axis Lighting Inc.

Project: IERBYS TEMPORARY IMPROVEMENTS
HLB Project #: 12141
Project ID 04-15000182

March 17th, 2015
Final Permit Set
265100-Lighting Fixtures, Lamps, Ballasts

Type: F1

LIGHTING CONTROL CUT SHEET Note: This document is for information only. Refer to specifications for all catalog numbers, etc.

DocuSign Envelope ID: 330DEBD6-9A9E-4F34-BDCC-1AC1BAA701E9

BEAM4 RECESSED MOUNT

ÉCLAIRAGE axis LIGHTING
1.800.263.AXIS
[T] 514.948.6272
[F] 514.948.6271
www.axislighting.com

INTEGRATED CONTROL OPTIONS

BEAM 4 luminaires allow the use of integrated controls such as daylight sensors (DS), occupancy sensors (OS), individual daylight sensors and occupancy sensors (DS+OS), and combination daylight/occupancy sensors (DOS). These options can be seamlessly integrated into our luminaires. The control system could be used to optimize the lighting of the space by reducing energy consumption through daylight harvesting and occupancy, thereby improving the overall interior environment and allowing for LEED credits.

- Consult factory for other options.
- Refer to IC brochure for more information.

SENSORS	BRAND	Model	TYPE	CODE	COMPATIBLE DIMMING BALLAST
Daylight Sensor (DS)	Lutron	EC-DIR-WH	Daylight	LD	EcoSystem
	Wattstopper	FD-301	Daylight	WD	0-10V
	Philips	Luxsense	Daylight	PL	0-10V
Occupancy Sensor (OS)	Wattstopper	FS-205	PIR Occupancy	WP1	Programmed Rapid Start
		FS-355	PIR Occupancy	WP2	Programmed Rapid Start
		FS-155	PIR Occupancy	WP3	Programmed Rapid Start
		FS-505	Ultrasonic Occupancy	WU1	Programmed Rapid Start
		FS-505C	Ultrasonic Occupancy	WU2	Programmed Rapid Start
		FM-105	High Frequency Occupancy	WH	Programmed Rapid Start
Daylight & Occupancy Sensors (DOS)	Philips	Actilume	Daylight & PIR Occupancy	PA	DALI or 0-10V

PHOTOMETRIC DATA

1 T5

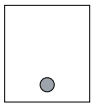

PHOTOMETRIC CURVE

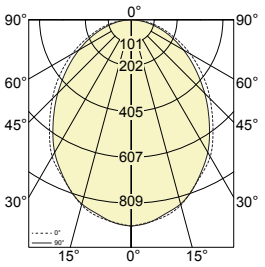

Test Lamp: 1xF28T5
IES FILE: BBR-F-FL-4-T5-1

Efficiency: 73.1%

CANDELA DISTRIBUTION

	Horizontal Angles					Zonal Lumens
Vertical Angle	0	22.5	45	67.5	90	
0	910	910	910	910	910	
5	896	910	896	902	898	48
15	846	842	844	845	842	203
25	745	743	745	736	736	321
35	629	626	615	608	603	381
45	492	485	477	463	459	376
55	363	355	343	329	326	326
65	240	234	226	216	211	246
75	134	130	124	114	111	153
85	45	42	36	32	31	63
90	6	4	2	2	1	

LUMINANCE DATA (CD/M2)

	Horizontal Angles		
Vertical Angle	0	45	90
45	5044	3029	2586
55	4436	2272	1867
65	3766	1608	1270
75	3084	986	725
85	2034	338	232

COEFFICIENTS OF UTILIZATION (%)

Ceiling	80				70				50		
Wall	70	50	30	10	70	50	30	10	50	30	10
0	87	87	87	87	85	85	85	85	81	81	81
1	80	77	74	71	78	75	72	70	72	70	68
2	73	67	62	58	71	66	61	58	63	60	56
3	67	59	54	49	65	58	53	49	56	52	48
4	62	53	47	42	60	52	46	42	50	45	41
5	57	48	41	37	55	47	41	36	45	40	36
6	53	43	37	32	51	42	36	32	41	36	32
7	49	39	33	29	48	39	33	29	38	32	28
8	46	36	30	26	45	35	30	26	35	29	26
9	43	33	27	23	42	33	27	23	32	27	23
10	40	31	25	21	39	30	25	21	30	25	21

Based on floor reflectance of 20

All IES files for other lamping are available for download at: www.axislighting.com

FILE NAME:BBR.SPEC January 28, 2013

Product design and development is an ongoing process at Axis Lighting. We reserve the right to change specifications. Contact Axis for the latest product information. © 2011 Axis Lighting Inc.

Project: IERBYS TEMPORARY IMPROVEMENTS
HLB Project #: 12141
Project ID 04-15000182

March 17th, 2015
Final Permit Set
265100-Lighting Fixtures, Lamps, Ballasts

Type: F1

LIGHTING CONTROL CUT SHEET Note: This document is for information only. Refer to specifications for all catalog numbers, etc.

DocuSign Envelope ID: 330DEBD6-9A9E-4F34-BDCC-1AC1BAA701E9

2 T5

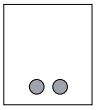

PHOTOMETRIC CURVE

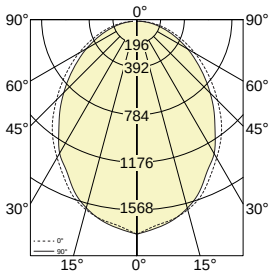

Test Lamp: 2xF28T5

IES FILE: BBR-F-FL-4-T5-2

Efficiency: 68.8%

CANDELA DISTRIBUTION

Vertical Angle	Horizontal Angles 0	22.5	45	67.5	90	Zonal Lumens
0	1764	1764	1764	1764	1764	
5	1702	1709	1708	1701	1724	92
15	1616	1590	1593	1595	1602	385
25	1422	1406	1412	1385	1369	609
35	1202	1185	1156	1135	1120	717
45	939	920	896	869	854	709
55	682	668	637	615	604	609
65	452	441	420	397	388	459
75	253	246	229	216	204	287
85	88	79	66	60	57	118
90	11	8	4	3	3	

LUMINANCE DATA (CD/M2)

Vertical Angle	Horizontal Angles 0	45	90
45	9628	5695	4816
55	8328	4217	3462
65	7089	2993	2336
75	5803	1828	1339
85	3946	621	421

COEFFICIENTS OF UTILIZATION (%)

Ceiling	80				70				50		
Wall	70	50	30	10	70	50	30	10	50	30	10
0	82	82	82	82	80	80	80	80	77	77	77
1	75	72	69	67	73	71	68	66	68	65	64
2	69	63	59	55	67	62	58	54	60	56	53
3	63	56	51	46	61	55	50	46	53	49	45
4	58	50	44	40	56	49	44	39	47	43	39
5	53	45	39	34	52	44	38	34	43	38	34
6	50	41	35	30	48	40	34	30	39	34	30
7	46	37	31	27	45	36	31	27	35	30	27
8	43	34	28	24	42	33	28	24	33	28	24
9	40	31	26	22	39	31	26	22	30	25	22
10	38	29	24	20	37	29	23	20	28	23	20

Based on floor reflectance of 20

1 T5

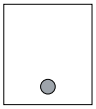

PHOTOMETRIC CURVE

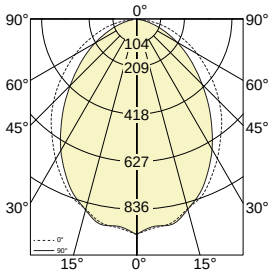

Test Lamp: 1xF28T5

IES FILE: BBR-F-RG-4-T5-1

Efficiency: 69.7%

CANDELA DISTRIBUTION

Vertical Angle	Horizontal Angles 0	22.5	45	67.5	90	Zonal Lumens
0	940	940	940	940	940	
5	915	914	917	910	908	49
15	858	870	866	865	861	208
25	767	766	758	737	737	328
35	639	640	611	584	573	380
45	512	499	460	421	408	367
55	373	358	315	279	270	306
65	249	229	190	163	153	219
75	138	118	87	69	65	123
85	38	25	20	20	20	41
90	2	3	2	2	2	

LUMINANCE DATA (CD/M2)

Vertical Angle	Horizontal Angles 0	45	90
45	4283	2409	1905
55	3704	1716	1282
65	3148	1112	766
75	2504	569	353
85	1315	157	120

COEFFICIENTS OF UTILIZATION (%)

Ceiling	80				70				50		
Wall	70	50	30	10	70	50	30	10	50	30	10
0	83	83	83	83	81	81	81	81	78	78	78
1	77	74	71	68	75	72	70	67	69	67	65
2	70	65	61	57	69	64	60	56	61	58	55
3	65	58	52	48	63	57	52	48	55	50	47
4	59	52	46	42	58	51	45	41	49	44	41
5	55	47	41	36	54	46	40	36	44	39	36
6	51	42	36	32	50	42	36	32	40	35	32
7	47	38	33	29	46	38	32	28	37	32	28
8	44	35	30	26	43	35	29	26	34	29	25
9	42	33	27	23	41	32	27	23	31	27	23
10	39	30	25	21	38	30	25	21	29	24	21

Based on floor reflectance of 20

ℹ All IES files for other lamping are available for download at: www.axislighting.com

Product design and development is an ongoing process at Axis Lighting. We reserve the right to change specifications. Contact Axis for the latest product information. © 2011 Axis Lighting Inc.

DocuSign Envelope ID: 330DEBD6-9A9E-4F34-BDCC-1AC1BAA701E9

SORAA® VIVID LED MR16 3000K 12VAC

Narrow Flood and Flood

Spot

POWERED BY GaN ON GaN™ TECHNOLOGY

Soraa's VIVID LED MR16 is the leader in next-generation high CRI LED lamps. The VIVID lamp's unprecedented perfect spectrum light, CRI of 95, R9 of 95, rich saturated color rendering, bright white rendering, and excellent color stability makes it the only choice for demanding display applications. Powered by Soraa's GaN on GaN™ technology, VIVID lamps match or exceed halogen MR16 performance, in color, output, energy efficiency, and ROI. VIVID lamps are revolutionizing lighting design, and with their unique single source optics deliver the best color and white rendering, beam definition, and crisp shadows available in directional light sources

PERFORMANCE

CBCP matches standard halogen lamps

Single light source

Single crisp shadow

Dimmable to 20%

Power Factor: 0.93

12V (10.8 min, 13.2 max)

COLOR

CCT: 3000K

CRI>95, R9 95

White point accuracy within 3 SDCM

Rich saturated color rendering

Excellent color stability

OPTIMIZED FORM

ANSI standard MR16 form factor: 1.96" (50mm) W x 1.86" (47.6mm) H

Compatible with standard fixtures

Weight: 40g

Proprietary fanless aluminum design provides superior thermal dissipation

HIGHLY COMPATIBLE

Works with magnetic and electronic transformers and dimmers (see complete list at www.soraa.com)

UL and CUL listed for use with 12VAC NEC Class 1 and Class 2 systems

LONG LIFE, LOW MAINTENANCE

Lifetime of 25,000 hours, L70

Three year warranty

ENERGY EFFICIENT

Saves over 75-80% of energy compared to standard halogen lamps

Typical payback of one year or less

INTENDED USE AND APPLICATIONS

LED retrofit lamp to replace 12VAC halogen MR16 lamps in recessed downlights, track lighting, and other indoor applications

For use in recessed downlights, track lighting and other indoor applications. Not for use with glass lenses or fully sealed fixtures

Not for use in non-ventilated fixtures less than 3"L x 3"W x 3"H.

Not for use in Emergency Fixtures or Exit Signs

Operating Temperature: Minimum-40°C (ambient); Typical: 80-110°C (base); Maximum: 120°C (base)

Soraa lamps are designed to safely shut down due to conditions in any thermal environment not conducive to minimum airflow or proper ventilation

CERTIFICATIONS

UL, CUL for 12VAC NEC Class 1 and Class 2 systems, FCC 47 CFR Part 15 and Part 18 (EMI), RoHS, CE, C-tick

12VAC

GU-5.3

3000K

CRI >95

R9 >95

DIM

RoHS

2012 PROGRESS Report SELECTION

SPECIFICATIONS*

Reference Number	Part Number	Product Code	Beam	Field	CBCP	Watts	Halogen Equivalent
MR16-40-B01-12-930-14	MR16-AB1-A1-930-10T-14-S1	00133	14°	27°	3250	10.4	35w
MR16-50-B01-12-930-20	MR16-AA1-A1-930-122-20-S1	00061	20°	38°	2100	12.2	40w
MR16-50-B01-12-930-25	MR16-AA1-A1-930-122-25-S1	00085	25°	42°	1900	12.2	40w
MR16-50-B01-12-930-36	MR16-AA1-A1-930-122-36-S1	00109	36°	60°	1075	12.2	40w

*at stable warm operating conditions (25°C ambient)

Form Factor — Base — Voltage — CRI — CCT — Beam

MR16 - 30 - B01 - 12 - 9 30 - 25

The diagram at left shows how to read the different components of the reference number. Base type BO1 refers to the GU 5.3 base.

Project: IERBYS TEMPORARY IMPROVEMENTS
HLB Project #: 12141
Project ID 04-15000182

March 17th, 2015
Final Permit Set
265100-Lighting Fixtures, Lamps, Ballasts

Type: F1

LIGHTING CONTROL CUT SHEET Note: This document is for information only. Refer to specifications for all catalog numbers, etc.

DocuSign Envelope ID: 330DEBD6-9A9E-4F34-BDCC-1AC1BAA701E9

SORAA VIVID LED MR16 3000K 12VAC

PHOTOMETRICS

Spot - 14°

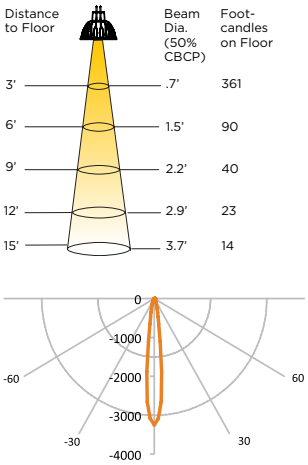

Narrow Flood -20°

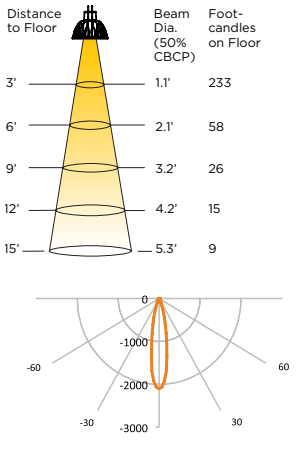

Narrow Flood -25°

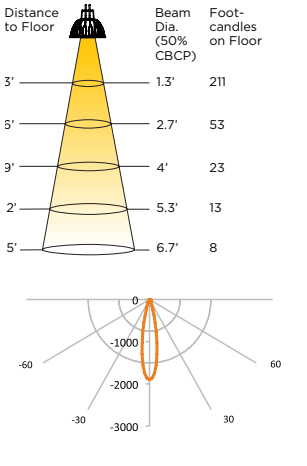

Flood -36° Degree

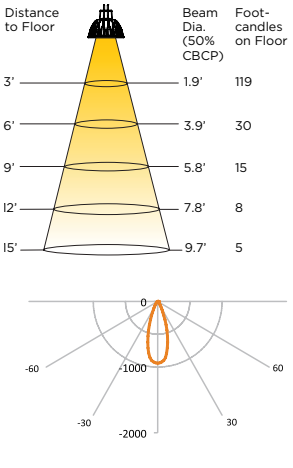

COLOR RENDERING

CRI- Relative R Values

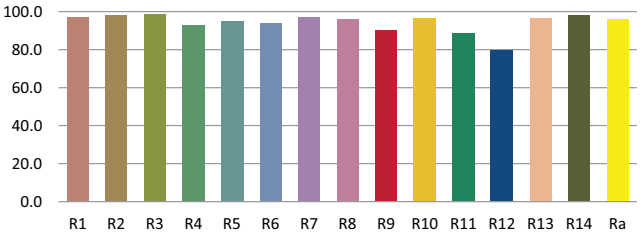

Comparative Spectra

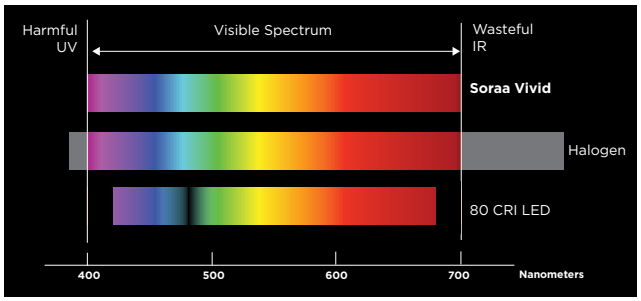

DIMENSIONS

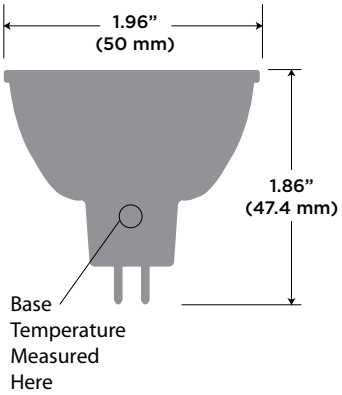

SAFETY NOTE ON HEAT

Soraa's unique LED technology allows its lamps to operate effectively and efficiently at higher temperatures than other LED lamps, resulting in more light output per diode. Although Soraa's lamps operate at cooler temperatures than halogen lamps, it is recommended that gloves be worn when handling bare lamps that have been energized.

TRANSFORMER/DIMMER COMPATIBILITY

Dimmable to 20% or lower, depending on dimmer. Complete transformer and dimmer compatibility information at www.soraa.com.

Information and specifications subject to change. 3.11.13 Rev A D-110125

Soraa Inc. 6500 Kaiser Drive, Fremont, CA 94555
510 456 2227 www.soraa.com

Project: IERBYS TEMPORARY IMPROVEMENTS
HLB Project #: 12141
Project ID 04-15000182

March 17th, 2015
Final Permit Set
265100-Lighting Fixtures, Lamps, Ballasts

Type: F1

LIGHTING CONTROL CUT SHEET Note: This document is for information only. Refer to specifications for all catalog numbers, etc.

DocuSign Envelope ID: 330DEBD6-9A9E-4F34-BDCC-1AC1BAA701E9

NANOLED® NXT

LN10RAT / LN10RAL-20W

40° Adjustable Trim Round 1 7/8" Regress

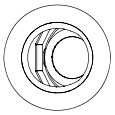

Plan View

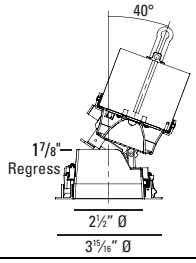

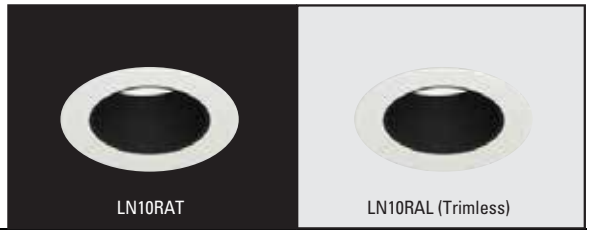

LUMINAIRE INFORMATION

LIGHT ENGINE DELIVERED PERFORMANCE

NanoLED NXT ADJUSTABLE	20 Watts	
	80+ CRI	90+ HIGH CRI
Lumens per Watt	46	38
Source Lumens	1250	1025
Delivered Lumens	**952**	**780**
Center Beam Candle Power 10°	8725	7000

High power white LED tightly binned for fixture-to-fixture color consistency within a 2-Step MacAdam Ellipse.

MATERIALS:

Trim: Precision die cast body with durable UV-stabilized powder coating.

Reflector: Interchangeable tool-less reflector system allows for flexibility while maintaining design consistency.
Available in 10° and 25° distribution.

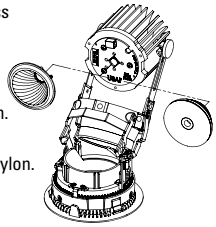

Trim Lens: Solite

Baffle Options: High temperature nylon.

BM - Black Matte Baffle
WM - White Matte Baffle
BV - Black Vertical Groove Baffle
WV - White Vertical Groove Baffle
BA - Black Alzak
MA - Matte Alzak

ADJUSTMENT:

True Hot Aiming with center beam optics is adjustable with 1/8" Allen screw driver. Simple recessed angled screws enable adjustment of vertical aiming and horizontal rotation from below, without trim removal. 362° locking horizontal rotation, with 0° - 40° locking vertical tilt.

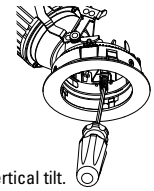

RATED LIFE: Based on IESNA LM80-2008 50,000 hours at 70% lumen maintenance (L70).

COLOR TEMPERATURE

Standard CRI	High CRI
2700K - 82+ CRI +/- 50K	2700K - 90+ CRI
3020K - 82+ CRI +/- 50K	3050K - 90+ CRI
3450K - 80+ CRI +/- 60K	

HEATSINK:

Proprietary high performance aluminum heatsink for maximum LED life.

DRIVER: Field Replaceable

Solid state electronic. Constant current. High power factor. Specify 120V or 277V. Driver complies with IEEE C62.41 surge protection.

DIMMING: (optional)

Multiple dimming drivers available.
See compatibility chart attached.

ACCESSORY HOLDER:

360° rotating, "D" size accessory holder.
Maxium 2 lenses.

AIMING MEMORY FEATURE:

Unique patent-pending vertical and horizontal aiming memory feature allows users to remove trim for reflector or accessory change without disturbing the set and locked lamp position. Trim is also keyed to housing to maintain aiming position.

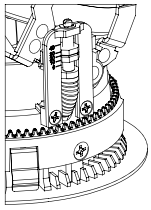

CEILING CUT OUT:

3 1/2" Ø

LISTINGS:

Dry/Damp
IBEW union made.

NOTES:

- Maximum ceiling thickness up to 1 1/2" See housing matrix on back for exceptions.
- Housing included with trim.
- Trimless for drywall installation only
- Trimless not available in acoustical ceilings.
- Fixture should be installed in applications where ambient temperatures do not exceed 40°C during normal operation.
- **5 year warranty**
- Interior use only.

ADJUSTABLE TRIM FEATURES

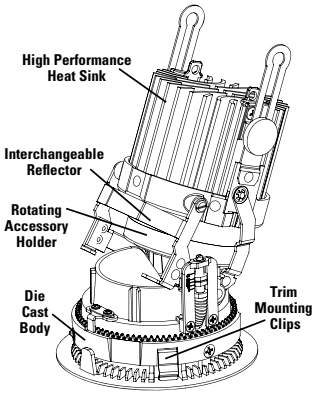

HOW TO SPECIFY

Trim	Baffle Options	Light Engine	Color Temperature	Reflector	Trim Finish	Housing	Voltage	Accessories
(Trim) **LN10RAT** (Trimless) **LN10RAL**	**BM** - Black Matte Baffle **WM** - White Matte Baffle **BV** - Black Vertical Groove Baffle **WV** - White Vertical Groove Baffle **MA** - Matte Alzak **BA** - Black Alzak	**MTG114** - (14W LED) **MTG120** - (20W LED)	**Standard CRI 80+** **27KS** - 2700K-82 CRI **30KS** - 3020K-82 CRI **35KS** - 3450K-80 CRI **High CRI 90+** **27KH** - 2700K-90 CRI **30KH** - 3020K-90 CRI	**LRNT410** - 10° Distribution **LRNT425** - 25° Distribution	**10** - White **21** - Black **28** - Metalized Grey **RAL** - Special Color	**LNC61** **LNC63** **LNC65** **LIC1** **LIC3** **LIC5** **LCP1** **LCP3** **LCP5**	**120V** **277V** **HOUSING DETAILS next page**	**CB27** - 27" C-Channel **CB52** - 52" C-Channel **DIML2**- 0-10V Low Voltage 15% Dimming Driver **DIML3**- Lutron Hi-lume LED / A-Series 2-wire Foward Phase (with neutral) 1% Dimming Driver. **120V Only.** **DIML4** - Lutron Hi-lume LED / A-Series 3-wire Fluorescent or EcoSystem 1% Dimming Driver **EML** - Emergency lighting battery pack w/ remote test switch. **Above ceiling access required for service** **EML not for use with IC/Airtight Housing**

BOFD - Borocilate Frosted
LLFD - Linear Spread Frosted Low Iron
SOFD - Solite Frosted
PRFD- Prismatic Frosted
HEXD- 1/8" Hex Cell Louver

LENSES and Louver

USAI®
www.usailighting.com
info@usailighting.com
1126 River Road
New Windsor, NY 12553
T 845–565–8500
F 845–561–1130

©2012. USAI, LLC.
All rights reserved.
All designs protected by copyright.
Revised 07/31/2012

Project: IERBYS TEMPORARY IMPROVEMENTS
HLB Project #: 12141
Project ID 04-15000182

March 17th, 2015
Final Permit Set
265100-Lighting Fixtures, Lamps, Ballasts

Type: F2

LIGHTING CONTROL CUT SHEET Note: This document is for information only. Refer to specifications for all catalog numbers, etc.

DocuSign Envelope ID: 330DEBD6-9A9E-4F34-BDCC-1AC1BAA701E9

NANOLED® NXT

Housings for use with
NanoLED Adjustable Trims - Round

LNC61, LNC63, LNC65
LIC1, LIC3, LIC5
LCP1, LCP3, LCP5

HOUSING FEATURES

- Easy adjustment aperture plate that allows ceiling thickness adjustment from 7/8" to 1 1/2". See housing matrix for details.
- Patent pending "Slide & Replace" easy driver replacement.
- Quick connectors on all wire connections.
- Universal housing style allows the ability to swap trim styles between Downlight, Adjustable and Wall Wash. See Plug-and-Play limitations on matrix below.
- Fabricated of 20 ga. black powder coated steel with thru wire J-box, 2 in 2 out at min. 90°C, #12 AGW thru branch circuit wiring.

DRIVER: (Field Replaceable)
Solid state electronic. Constant current. High power factor. Specify 120V or 277V.

DIMMING: (optional)
3 wire dimming driver available. See compatibility chart attached.

MOUNTING:
Butterfly brackets and adjustable nailer bars with integral nails provided. Nailer bars are extendible from 14" to 24" centers.

CEILING CUT OUT: 3 1/2" Ø

LISTINGS:
Dry/Damp
IBEW union made.

ENERGY STAR PARTNER

NOTES:
- Maximum ceiling thickness 1 1/2". See matrix for ceiling thickness options.
- Housing included with trim.
- Trimless for drywall installation only
- Trimless not available in acoustical ceilings.
- Fixture should be installed in applications where ambient temperatures do not exceed 40°C during normal operation.
- **5 year warranty**

HOUSING INFORMATION - See limitations below

New Construction

LNC61 - DL / ADJ / WW
(Max. Ceiling Thickness - 7/8")

LNC63 - DL / ADJ 30° / WW
(Max. Ceiling Thickness - 1 1/4")

LNC65 - DL / ADJ 20°
(Max. Ceiling Thickness - 1 1/2")

IC / Airtight

LIC1 - DL / ADJ / WW
(Max. Ceiling Thickness - 7/8")

LIC3 - DL / ADJ 30° / WW
(Max. Ceiling Thickness - 1 1/4")

LIC5 - DL / ADJ 20°
(Max. Ceiling Thickness - 1 1/2")

CP / Chicago Plenum - CCEA Approved

LCP1 - DL / ADJ / WW
(Max. Ceiling Thickness - 7/8")

LCP3 - DL / ADJ 30° / WW
(Max. Ceiling Thickness - 1 1/4")

LCP5 - DL / ADJ 20°
(Max. Ceiling Thickness - 1 1/2")

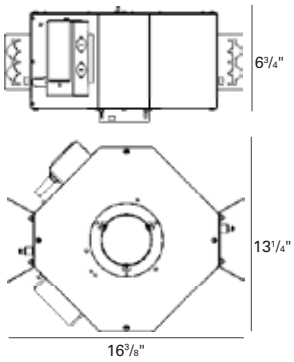

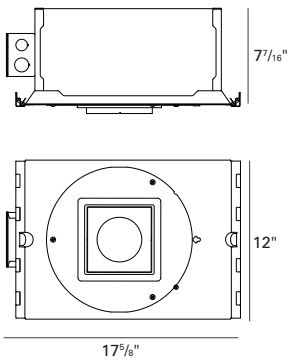

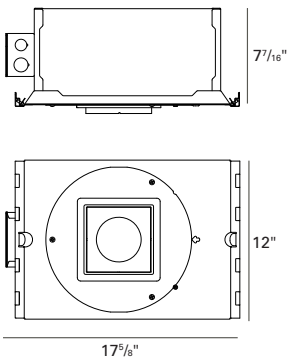

Order housings with trims on reverse side.

USAI®
www.usailighting.com
info@usailighting.com
1126 River Road
New Windsor, NY 12553
T 845–565–8500
F 845–561–1130

©2012. USAI, LLC.
All rights reserved.
All designs protected by copyright.
Revised 07/31/2012

Project: IERBYS TEMPORARY IMPROVEMENTS
HLB Project #: 12141
Project ID 04-15000182

March 17th, 2015
Final Permit Set
265100-Lighting Fixtures, Lamps, Ballasts

Type: F2

LIGHTING CONTROL CUT SHEET Note: This document is for information only. Refer to specifications for all catalog numbers, etc.

DocuSign Envelope ID: 330DEBD6-9A9E-4F34-BDCC-1AC1BAA701E9

NANOLED® NXT

LN10RAT / LN10RAL-20W

40° Adjustable Trim Round
1 7/8" Regress

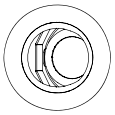

Plan View

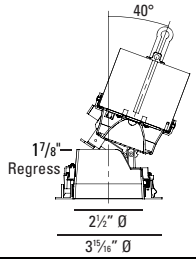

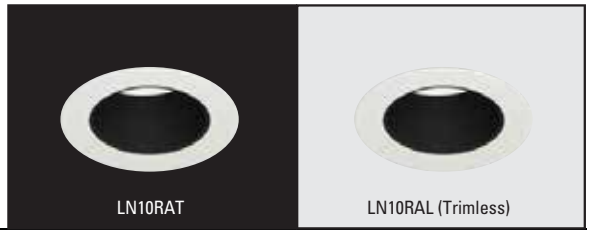

LUMINAIRE INFORMATION

LIGHT ENGINE DELIVERED PERFORMANCE

NanoLED NXT ADJUSTABLE	20 Watts	
	80+ CRI	90+ HIGH CRI
Lumens per Watt	46	38
Source Lumens	1250	1025
Delivered Lumens	**952**	**780**
Center Beam Candle Power 10°	8725	7000

High power white LED tightly binned for fixture-to-fixture color consistency within a 2-Step MacAdam Ellipse.

MATERIALS:

Trim: Precision die cast body with durable UV-stabilized powder coating.

Reflector: Interchangeable tool-less reflector system allows for flexibility while maintaining design consistency.
Available in 10° and 25° distribution.

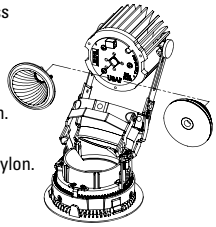

Trim Lens: Solite

Baffle Options: High temperature nylon.

BM - Black Matte Baffle
WM - White Matte Baffle
BV - Black Vertical Groove Baffle
WV - White Vertical Groove Baffle
BA - Black Alzak
MA - Matte Alzak

ADJUSTMENT:

True Hot Aiming with center beam optics is adjustable with 1/8" Allen screw driver. Simple recessed angled screws enable adjustment of vertical aiming and horizontal rotation from below, without trim removal. 362° locking horizontal rotation, with 0° - 40° locking vertical tilt.

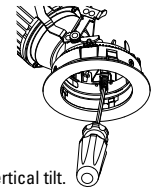

RATED LIFE: Based on IESNA LM80-2008 50,000 hours at 70% lumen maintenance (L70).

COLOR TEMPERATURE

Standard CRI	High CRI
2700K - 82+ CRI +/- 50K	2700K - 90+ CRI
3020K - 82+ CRI +/- 50K	3050K - 90+ CRI
3450K - 80+ CRI +/- 60K	

HEATSINK:

Proprietary high performance aluminum heatsink for maximum LED life.

DRIVER: Field Replaceable

Solid state electronic. Constant current. High power factor. Specify 120V or 277V. Driver complies with IEEE C62.41 surge protection.

DIMMING: (optional)

Multiple dimming drivers available.
See compatibility chart attached.

ACCESSORY HOLDER:

360° rotating, "D" size accessory holder.
Maxium 2 lenses.

AIMING MEMORY FEATURE:

Unique patent-pending vertical and horizontal aiming memory feature allows users to remove trim for reflector or accessory change without disturbing the set and locked lamp position. Trim is also keyed to housing to maintain aiming position.

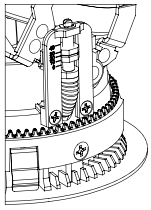

CEILING CUT OUT:

3 1/2" Ø

LISTINGS:

Dry/Damp
IBEW union made.

NOTES:

- Maximum ceiling thickness up to 1 1/2" See housing matrix on back for exceptions.
- Housing included with trim.
- Trimless for drywall installation only
- Trimless not available in acoustical ceilings.
- Fixture should be installed in applications where ambient temperatures do not exceed 40°C during normal operation.
- **5 year warranty**
- Interior use only.

ADJUSTABLE TRIM FEATURES

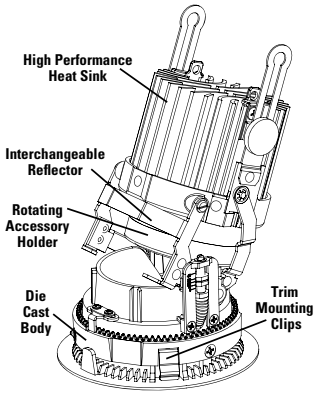

HOW TO SPECIFY

Trim	Baffle Options	Light Engine	Color Temperature	Reflector	Trim Finish	Housing	Voltage	Accessories
(Trim) **LN10RAT** (Trimless) **LN10RAL**	**BM** - Black Matte Baffle **WM** - White Matte Baffle **BV** - Black Vertical Groove Baffle **WV** - White Vertical Groove Baffle **MA** - Matte Alzak **BA** - Black Alzak	**MTG114** - (14W LED) **MTG120** - (20W LED)	**Standard CRI 80+** **27KS** - 2700K-82 CRI **30KS** - 3020K-82 CRI **35KS** - 3450K-80 CRI **High CRI 90+** **27KH** - 2700K-90 CRI **30KH** - 3020K-90 CRI	**LRNT410** - 10° Distribution **LRNT425** - 25° Distribution	**10** - White **21** - Black **28** - Metalized Grey **RAL** - Special Color	**LNC61** **LNC63** **LNC65** **LIC1** **LIC3** **LIC5** **LCP1** **LCP3** **LCP5**	**120V** **277V** **HOUSING DETAILS next page**	**CB27** - 27" C-Channel **CB52** - 52" C-Channel **DIML2**- 0-10V Low Voltage 15% Dimming Driver **DIML3**- Lutron Hi-lume LED / A-Series 2-wire Foward Phase (with neutral) 1% Dimming Driver. **120V Only.** **DIML4** - Lutron Hi-lume LED / A-Series 3-wire Fluorescent or EcoSystem 1% Dimming Driver **EML** - Emergency lighting battery pack w/ remote test switch. **Above ceiling access required for service** **EML not for use with IC/Airtight Housing**

BOFD - Borocilate Frosted
LLFD - Linear Spread Frosted Low Iron
SOFD - Solite Frosted
PRFD- Prismatic Frosted
HEXD- 1/8" Hex Cell Louver

LENSES and Louver

USAI®

www.usailighting.com
info@usailighting.com
1126 River Road
New Windsor, NY 12553
T 845–565–8500
F 845–561–1130

©2012. USAI, LLC.
All rights reserved.
All designs protected by copyright.
Revised 07/31/2012

Project: IERBYS TEMPORARY IMPROVEMENTS
HLB Project #: 12141
Project ID 04-15000182

March 17th, 2015
Final Permit Set
265100-Lighting Fixtures, Lamps, Ballasts

Type: F2d

LIGHTING CONTROL CUT SHEET Note: This document is for information only. Refer to specifications for all catalog numbers, etc.

DocuSign Envelope ID: 330DEBD6-9A9E-4F34-BDCC-1AC1BAA701E9

NANOLED® NXT

Housings for use with
NanoLED Adjustable Trims - Round

LNC61, LNC63, LNC65
LIC1, LIC3, LIC5
LCP1, LCP3, LCP5

HOUSING FEATURES

- Easy adjustment aperture plate that allows ceiling thickness adjustment from 7/8" to 1 1/2". See housing matrix for details.
- Patent pending "Slide & Replace" easy driver replacement.
- Quick connectors on all wire connections.
- Universal housing style allows the ability to swap trim styles between Downlight, Adjustable and Wall Wash. See Plug-and-Play limitations on matrix below.
- Fabricated of 20 ga. black powder coated steel with thru wire J-box, 2 in 2 out at min. 90°C, #12 AGW thru branch circuit wiring.

DRIVER: (Field Replaceable)
Solid state electronic. Constant current. High power factor. Specify 120V or 277V.

DIMMING: (optional)
3 wire dimming driver available. See compatibility chart attached.

MOUNTING:
Butterfly brackets and adjustable nailer bars with integral nails provided. Nailer bars are extendible from 14" to 24" centers.

CEILING CUT OUT: 3 1/2" Ø

LISTINGS:
Dry/Damp
IBEW union made.

ENERGY STAR PARTNER

NOTES:
- Maximum ceiling thickness 1 1/2". See matrix for ceiling thickness options.
- Housing included with trim.
- Trimless for drywall installation only
- Trimless not available in acoustical ceilings.
- Fixture should be installed in applications where ambient temperatures do not exceed 40°C during normal operation.
- **5 year warranty**

HOUSING INFORMATION - See limitations below

New Construction

LNC61 - DL / ADJ / WW
(Max. Ceiling Thickness - 7/8")

LNC63 - DL / ADJ 30° / WW
(Max. Ceiling Thickness - 1 1/4")

LNC65 - DL / ADJ 20°
(Max. Ceiling Thickness - 1 1/2")

IC / Airtight

LIC1 - DL / ADJ / WW
(Max. Ceiling Thickness - 7/8")

LIC3 - DL / ADJ 30° / WW
(Max. Ceiling Thickness - 1 1/4")

LIC5 - DL / ADJ 20°
(Max. Ceiling Thickness - 1 1/2")

CP / Chicago Plenum - CCEA Approved

LCP1 - DL / ADJ / WW
(Max. Ceiling Thickness - 7/8")

LCP3 - DL / ADJ 30° / WW
(Max. Ceiling Thickness - 1 1/4")

LCP5 - DL / ADJ 20°
(Max. Ceiling Thickness - 1 1/2")

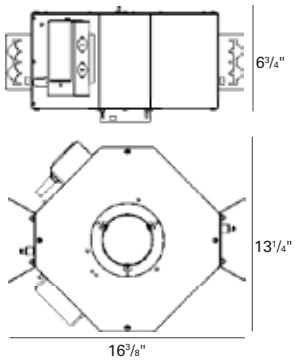

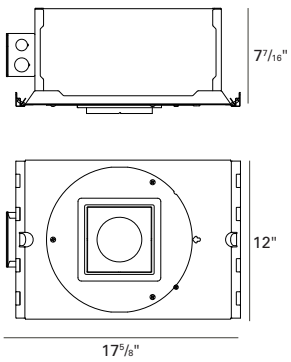

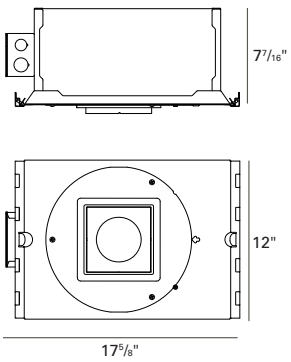

Order housings with trims on reverse side.

USAI®
www.usailighting.com
info@usailighting.com
1126 River Road
New Windsor, NY 12553
T 845–565–8500
F 845–561–1130

©2012. USAI, LLC.
All rights reserved.
All designs protected by copyright.
Revised 07/31/2012

Project: IERBYS TEMPORARY IMPROVEMENTS
HLB Project #: 12141
Project ID 04-15000182

March 17th, 2015
Final Permit Set
265100-Lighting Fixtures, Lamps, Ballasts

Type: F2d

LIGHTING CONTROL CUT SHEET Note: This document is for information only. Refer to specifications for all catalog numbers, etc.

DocuSign Envelope ID: 330DEBD6-9A9E-4F34-BDCC-1AC1BAA701E9

NANOLED NXT

DIMMING DRIVER COMPATIBILITY SELECTION GUIDE DIML2 & DIML3

DIMMING DRIVER WIRING SCHEMES:

DIML2 LED: 0-10V FL Dimming Driver Wiring (Dims down to 15%)

NOTE: Consult dimmer manufacturer for detailed installation information.

For use with 0-10V fluorescent type controls.
Use only with approved vendor models:
Lutron: DIVA DVTV-XX XX=Color
Leviton: IP710-DLX
Lightolier: V2000FAMU

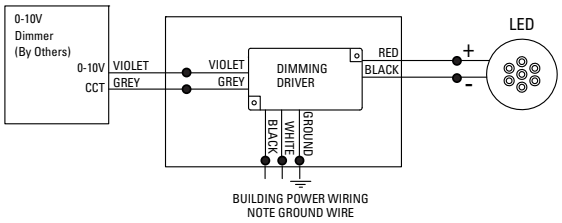

Compatible Crestron Dimming System

NOTE: Consult dimmer manufacturer for detailed installation information.

Creston Model	Compatible	Min # of Fixtures Required (1)	Creston Min-Max % Limits (2)	Measured Light Output (3)
CLS-EXP-DIMFLV	Y	1	0-100%	15-100%
DIN-4DIMFLV4	Y	1	0-100%	15-100%
DIN-A08	Y	1	0-100%	15-100%
GLX-DIMFLV8	Y	1	0-100%	15-100%
GLXP-DIMFLV8	Y	1	0-100%	15-100%

(1) Operating dimmers with less than minimum required fixtures may cause flicker.
The Max number of fixtures is limited by dimmer rating unless otherwise noted.
(2) % Level refers to the Crestron Control System Intensity.
Operating the dimmer below the Min % level may cause flicker.
Operating the dimmer above the Max % may show no additional brightness.
(3) % Level of light output from fixture when connected directly to power source
(4) Dimmer requires a direct connection to neutral unless otherwise noted.

DIML3 LED: Lutron Hi-lume LED A-Series 2-Wire Foward Phase (with neutral) 1% Dimming Driver. 120V Only.

Compatible Lutron Dimmers / Test Results

NOTE: Consult dimmer manufacturer for detailed installation information.

Product	Part Number	Fixtures Per Dimmer 120V Only*	Measured Light Output Range
NovaT	NTLV-600-CPN0199	1 – 8	100% - 1%
Maestro Wireless	MRF2-6ND-120	1 – 8	100% - 1%
RadioRA 2 1000W	RRD-10ND	1 – 13	100% - 1%
RadioRA 2 Adaptive dimmer	RRD-6NA	1 – 8	100% - 1%
RadioRA 600W	RA-6ND	1 – 8	100% - 1%
RadioRA 1000W	RA-10ND	1 – 13	100% - 1%
HomeWorks QS 600W	HQRD-6ND	1 – 8	100% - 1%
HomeWorks QS 1000W	HQRD-10ND	1 – 13	100% - 1%
HomeWorks QS Adaptive dimmer	HQRD-6NA	1 – 8	100% - 1%
HomeWorks QS WPM	HQRJ-WPM-6D-120	1 – 11 (per output)	100% - 1%
HomeWorks 600W dimmer	HRD-6ND	1 – 8	100% - 1%
HomeWorks 1000W dimmer	HWD-10ND, HRD-10ND	1 – 8	100% - 1%
HomeWorks WPM	HWI-WPM-6D-120	1 – 10 (per output)	100% - 1%
GRAFIK Eye QS	QSGR-, QSGRJ-	1 – 10 (per output)	100% - 1%
GRAFIK Eye 3000	GRX-3100, GRX-3500	1 – 10 (per output)	100% - 1%
RPM-4U Module (LCP, HomeWorks, GRAFIK Systems, Quantum)	HW-RPM-4U-120, LP-RPM-4U-120	1 – 26 (per output)	100% - 1%
RPM-4A Module (LCP, HomeWorks, GRAFIK Systems, Quantum)	HW-RPM-4A-120, LP-RPM-4A-120	1 – 8 (per output)	100% - 1%
GP Panels (LCP, HomeWorks, GRAFIK Systems, Quantum)	Various	1 – 27	100% - 1%
Stanza	SZ-6ND	1 – 8	100% - 1%

* Fixtures per Dimmer value assumes a 40W fixture. Number of fixtures may be higher if wattage is less than 40W.
NOTE: Contact Lutron tech support for deganging rules when using wallbox controls on the Hi-lume A-Series LED Driver.

Compatible ETC Dimming Cabinets / Test Results

Approved for use with:
ETC Sensor + Cabinet with D20 dimming module
Measured light output 100% - 1%

ETC Unison DRd Cabinet with D20F dimming module
NOTE: Additional dim configuration required for optimum performance.
Measured light output 100% - 1%

Wire Diagram for 2-Wire Control

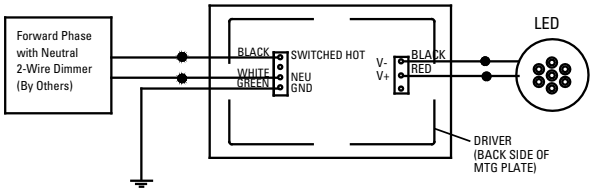

USAI®
www.usailighting.com
info@usailighting.com
1126 River Road
New Windsor, NY 12553
T 845–565–8500
F 845–561–1130

©2012. USAI, LLC.
All rights reserved.
All designs protected by copyright.
Revised 07/31/2012

Project: IERBYS TEMPORARY IMPROVEMENTS
HLB Project #: 12141
Project ID 04-15000182

March 17th, 2015
Final Permit Set
265100-Lighting Fixtures, Lamps, Ballasts

Type: F2d

LIGHTING CONTROL CUT SHEET Note: This document is for information only. Refer to specifications for all catalog numbers, etc.

DocuSign Envelope ID: 330DEBD6-9A9E-4F34-BDCC-1AC1BAA701E9

NANOLED® NXT

DIMMING DRIVER COMPATIBILITY SELECTION GUIDE DIML4

DIMMING DRIVER WIRING SCHEMES:

DIML4 LED: Lutron Hi-lume LED A-Series 3-Wire Fluorescent or EcoSystem 1% Dimming Driver.

Compatible Lutron Dimmers / Test Results

NOTE: Consult dimmer manufacturer for detailed installation information.

Product	Part Number	Fixtures Per Dimmer 120V	Fixtures Per Dimmer 277V	Measured Light Output Range
NovaT	NTF-10,	1-59	-	100% - 1%
NovaT	NTF-103P, NTF-10-277	1-29	1-61	100% - 1%
NovaT	NTF-103P-277	-	1-46	100% - 1%
Nova	NF-10	1-59	-	100% - 1%
Nova	NF-103P, NF-10-277	1-29	1-61	100% - 1%
Nova	NF-103P-277	-	1-46	100% - 1%
Vareo	VF-10	1-29	-	100% - 1%
Skylark	SF-10P, SF-103P	1-29	-	100% - 1%
Skylark	SF-12P-277,SF-12P-277-3	-	1-46	100% - 1%
Diva	DVF-103, DVSCF-103P	1-29	-	100% - 1%
Diva	DVF-103P-277,DVSCF-103P-277	-	1-46	100% - 1%
Ariadni	AYF-103P	1-29	-	100% - 1%
Ariadni	AYF-103P-277	-	1-46	100% - 1%
Vierti	VTF-6AM	1-22	-	100% - 1%
Maestro	MAF-6AM, MAF-6AM-277, MSCF-6AM, MCSF-6AM-277	1-22	1-46	100% - 1%
Maestro Wireless	MRF2-F6AN-DV	1-22	1-46	100% - 1%
Spacer System	SPSF-6A,SPSF-6A-277, SPSF-6AM, SPSF-6AM-277	1-22	1-46	100% - 1%
Lyneo LX	LXF-103PL	1-29	-	100% - 1%
Lyneo LX	LXF-103PL-277	-	1-46	100% - 1%
Radio RA 2	RRD-F6AN-DV	1-22	1-46	100% - 1%
HomeWorks QS	HQRD-F6AN-DV	1-22	1-46	100% – 1%
Interfaces (1)	PHPM-3F -120, PHPM-3F-DV	1-59	1-123	100% - 1%
	NGRX-FDBI-16A	1-59	-	100% - 1%
Energi Savr Node with EcoSystem	CS-1L-WM, CS-2L-WM, CS-1LCM, CS-2L-CM	64 per EcoSystem		100% - 1%
Grafik Eye QS with ECO System	QS with EcoSystem			100% - 1%
				100% - 1%
Quantum	Quantum			100% - 1%
PowerPak dim module ECOSystem	RMJ-ECO32-DV-B	32 per module		100% - 1%
				100% - 1%

(1) For use with 3 Wire controls or Commercial Systems, RA Systems or Home Systems applications.
*Contact Lutron tech support for deganging rules when using wallbox controls on the Hi-lume A-Series LED Driver.
**Fixtures per Dimmer value assumes a 40W fixture. Number of fixtures may be higher if wattage is less than 40W.

Wire Diagram for 3-Wire FL Control (no Eco System Control)

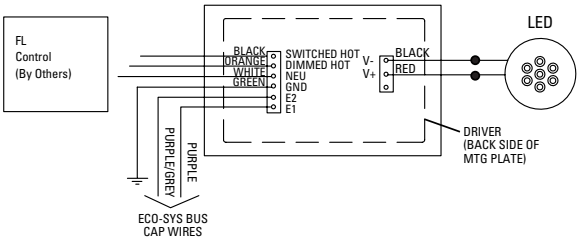

Wire Diagram for ECO System Digital Control

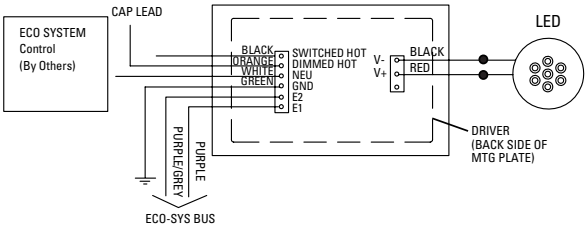

Compatible ETC Dimming Cabinets / Test Results

Approved for use with:
ETC Sensor+ Cabinet with D20 dimming module
Measured light output 100% - 1%

ETC Unison DRd Cabinet with D20F dimming module
NOTE: Additional dim configuration required for optimum performance.
Measured light output 100% - 1%

USAI®
www.usailighting.com
info@usailighting.com
1126 River Road
New Windsor, NY 12553
T 845–565–8500
F 845–561–1130

©2012. USAI, LLC.
All rights reserved.
All designs protected by copyright.
Revised 07/31/2012

Project: IERBYS TEMPORARY IMPROVEMENTS
HLB Project #: 12141
Project ID 04-15000182

March 17th, 2015
Final Permit Set
265100-Lighting Fixtures, Lamps, Ballasts

Type: F2d

LIGHTING CONTROL CUT SHEET Note: This document is for information only. Refer to specifications for all catalog numbers, etc.

DocuSign Envelope ID: 330DEBD6-9A9E-4F34-BDCC-1AC1BAA701E9

BIRCHWOOD lighting

www.birchwoodlighting.com

WP SYSTEM

Sliding Adjustable Staggered

Single or Double T5/T5HO or T8

Multi-Application Sliding Strip

With a vast assortment of ultra-minimal housing profiles that can accommodate T5/T5HO or T8 linear lamps, WP SYSTEM Specification Grade Strip fixtures are the perfect choice when less is best.

Choose from many styles, including: side mount, diagonal, adjustable staggered or individual modules in shorter lengths. Whatever your specification requires, WP SYSTEM fixtures can deliver strong light while providing durability and value to any interior project: commercial, architectural, residential or retail.

Reflectors and various accessories (on some models) combined with dimming capabilities, or emergency battery options complete the make-up for one of our most popular and enduring product lines.

UL and c-UL listed for dry and damp locations.

Made in the USA

FIXTURE SPECIFICATIONS

Construction
Die-formed heavy duty 20 gauge steel construction. Post-formed high reflectivity white powder coat finish provides smooth edges, rust-resistance and even coverage on entire fixture.

Lamping and Ballast
Single or double T5, T5HO or T8 linear fluorescent lamps in cross section. Integral electronic ballast standard. Dimming and (EM) Emergency battery pack options available. Consult factory for availability and specifications.

Finishes
Post-formed high-reflectivity white powder coat finish. Custom colors available - consult factory.

Mounting
Suitable for surface mounting in multiple applications. Ideal for cove or soffit. Compatible for field thru-wiring.

Fixture Length
Fixtures are available in nominal lengths of 2, 3, and 4 feet. Continuous run mounting and thru-wire compatibility.

Custom and Mods
We proudly specialize in manufacturing custom and modified luminaires and have the ability to modify most of our standard fixtures. Please contact factory with any inquiries.

V-1012B

Birchwood Lighting • 1302 East Hunter Avenue • Santa Ana, CA 92705 • 714.550.7118 fax 714.550.7151

Project: IERBYS TEMPORARY IMPROVEMENTS
HLB Project #: 12141
Project ID 04-15000182

March 17th, 2015
Final Permit Set
265100-Lighting Fixtures, Lamps, Ballasts

Type: F3

LIGHTING CONTROL CUT SHEET Note: This document is for information only. Refer to specifications for all catalog numbers, etc.

DocuSign Envelope ID: 330DEBD6-9A9E-4F34-BDCC-1AC1BAA701E9

BIRCHWOOD lighting

www.birchwoodlighting.com

WP SYSTEM

Sliding Adjustable Staggered

Single or Double T5/T5HO or T8

Type: Job Name:

Multi-Application Sliding Strip

SPECIFICATION CODE

WP- _____ _____ _____ _____ _____ _____ _____

lamps model length finish voltage ballast options

Lamps	Model	Nominal Length	Finish	Voltage[1]	Ballast	Options
T5 **T5HO** **T8**	**1STSAS -** 1 Lamp Sliding Adjustable Stagger **2STSAS -** 2 Lamp Sliding Adjustable Stagger	**2** - 2' **3** - 3' **4** - 4' **CR_** Continuous Run[2]	**HRW** - High Reflectivity White (standard) **CUP** - Custom Paint	**120** **277**	**EB** - Electronic (standard) **Dimming** **HL3** - Hi-Lume **ES** - EcoSystem **ESH** - EcoSystem H-Series **0-10V** - 0-10V	**EM**[3] - Emergency Battery Pack

NOTES
1 other voltages available, consult factory
2 CR fixtures are field thru-wire compatible
3 not available in all lengths, consult factory

Dimensions

1STSAS or 2STSAS T5/T5HO

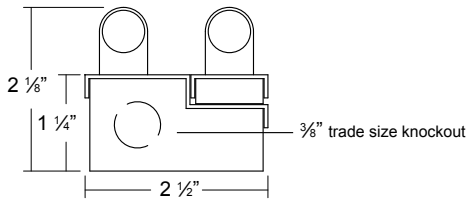

1STSAS or 2STSAS T8

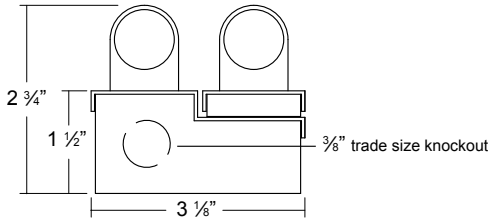

1STSAS T5/T5HO/T8

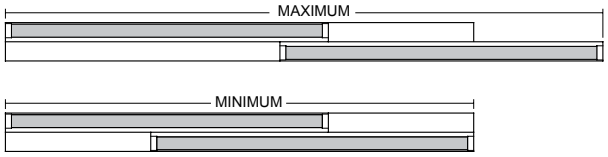

2STSAS T5/T5HO/T8

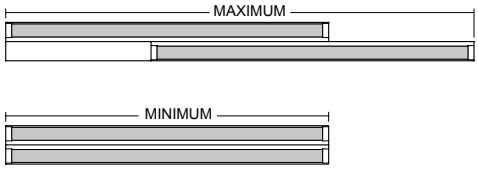

1STSAS T5/T5HO extension table

Nominal	Min/Max Lengths	
T5 or T5HO	Min	Max
2'	31 ½"	41"
3'	49 ¼"	64 ½"
4'	67"	88 ¼"

1STSAS T8 extension table

Nominal	Min/Max Lengths	
T8	Min	Max
2'	34 ½"	44 ½"
3'	52 ½"	68 ½"
4'	70 ½"	92 ½"

2STSAS T5/T5HO extension table

Nominal	Min/Max Lengths	
T5 or T5HO	Min	Max
2'	22 7/16"	32 ⅛"
3'	34 ¼"	49 ⅞"
4'	46 1/16"	67 9/16"

2STSAS T8 extension table

Nominal	Min/Max Lengths	
T8	Min	Max
2'	24"	34 ¾"
3'	36"	52 ¾"
4'	48"	70 ¾"

V-1012B

Birchwood Lighting • 1302 East Hunter Avenue • Santa Ana, CA 92705
714.550.7118 fax 714.550.7151

Due to a program of continuous improvement specifications are subject to change without notice.
© 2012 Birchwood Lighting, Inc. All rights reserved.

Project: IERBYS TEMPORARY IMPROVEMENTS
HLB Project #: 12141
Project ID 04-15000182

March 17th, 2015
Final Permit Set
265100-Lighting Fixtures, Lamps, Ballasts

Type: F3

LIGHTING CONTROL CUT SHEET Note: This document is for information only. Refer to specifications for all catalog numbers, etc.

DocuSign Envelope ID: 330DEBD6-9A9E-4F34-BDCC-1AC1BAA701E9

BeveLED® LED

Downlight

*

2010 PROGRESS Report SELECTION

PRODUCT INNOVATION AWARDS • 2011
PLATINUM WINNER
MOST UNIQUE PRODUCT WINNER

3020

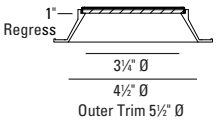

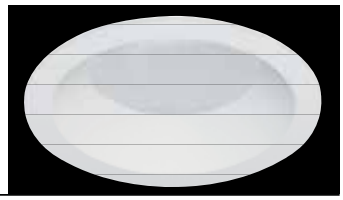

LUMINAIRE INFORMATION

APPLICATION:
Accent luminaire for Residential, Commercial, Retail or Hospitality environments.

MATERIALS:
Trim: Die cast aluminum retained by two mounting clips.
Housing: Fabricated of 20 ga. galvanized steel with thru wire J-box, 4 in 4 out (for NC, NCAH and IC) 2 in 2 out (for NCSL and RT) at min. 90°C, #12 AGW thru branch circuit wiring. Housing and trim supplied as one complete unit.
Trim Lens: Proprietary low glare blended optical lens system.
Reflector: Precision injection molded specular polycarbonate reflector maximized for 30º, 50° or 80° beam distribution. 30º and 50º reflectors are field interchangeable in NC, IC, CP and NCAH.

LIGHT ENGINE: Field Replaceable
Available in 10W or 20W ±100K. High power white LED's tightly binned for fixture to fixture color consistency.

CRI OPTIONS: Standard: 80+ CRI. **High:** 90+ CRI.

RATED LIFE: Based on IESNA LM80-2008
20W - 50,000 hours at 70% lumen maintenance (L70).
10W - 50,000 hours at 70% lumen maintenance (L70).

HEATSINK:
Proprietary high performance aluminum die cast heatsink for maximum LED life.

DRIVER: Field Replaceable
Solid state electronic. Constant current. High power factor. Specify 120V or 277V.

DIMMING: (optional)
Multiple 3 wire dimming drivers available. See compatibility chart attached.

MOUNTING:
NC / NCAH / IC / NCSL : Butterfly brackets and adjustable nailer bars with integral nails provided. Nailer bars are extendible from 14" to 24" centers.
RT: Screw driver activated swing and compress mounting system.

CEILING CUT OUT: 5¹/₁₆" Ø

LISTINGS:
Dry/Damp.
*Wet under covered ceiling is optionally available (not standard). IBEW union made. Chicago Plenum housing is CCEA Approved.

ENERGY STAR

NOTES:
- Housing included with trim.
- Maximum ceiling thickness
  NC / NCAH / IC / CP: 1 inch. **NCSL / RT:** 1-1/4"
  Consult factory for other ceiling conditions.
- Fixture should be installed in applications where ambient temperatures do not exceed 40°C during normal operation.
- **5 year warranty**
- IC not currently Energy Star rated.
- NCSL / RT: Min. 1/2" clearance above fixture for servicing.

PHOTOMETRICS:
Consult factory.
Tested in accordance with IESNA LM79-2008.

HOUSING INFORMATION

New Construction - NC
Non-Air Handling Plenum
50° Beam Shown

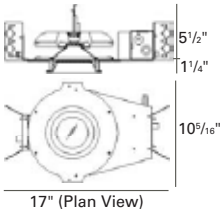

New Construction - NCAH
Air Handling Plenum
50° Beam Shown

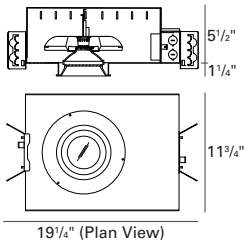

Insulated / Airtight - IC
Chicago Plenum - CP
50° Beam Shown

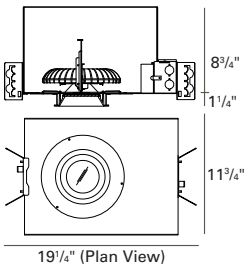

New Construction - NCSL
Air Handling Plenum

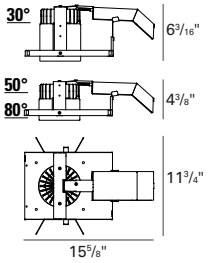

Retrofit - RT
Air Handling Plenum

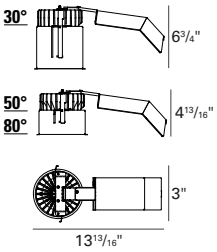

HOW TO SPECIFY

Trim	Trim Suffix for 80°	Finish	Housing	Color Temperature	Reflector	Housing Type	Voltage	Accessories
3020								
3020 BeveLED Trim Downlight	**8** Use 8 suffix to order trim that uses 80° reflector **Do not include 8 when ordering 30° or 50° reflector**	**10** - White **21** - Black **28** - Metalized Grey **RAL** - Special Color	**LRTD4-9010-C1** (10W LED) **LRTD4-9020-C1** (20W LED)	**Standard CRI 80+** **27** - 2700K **30** - 3000K **35** - 3500K **40** - 4000K **High CRI 90+** **27H** - 2700K **30H** - 3000K	**30** - 30° **50** - 50° **80** - 80°	**NC** - New Construction **CP** - Chicago Plenum **IC** - Insulated / Airtight **NCAH** - New Construction Air Handling **NCSL** - New Construction Air Handling **RT** - Retrofit Air Handling	**120V** **277V**	**CB27** - 27" C-Channel Bars **CB52** - 52" C-Channel Bars **DIML2** - 0-10V Low Voltage 15% Dimming Driver **DIML4** - Lutron Hi-Lume LED / ECO System Series A 3 Wire Control 1% Dimming Driver **Below Options ONLY available for NC / NCAH / IC*** **W** - Wet Listed (under covered ceiling) **EML** - Emergency lighting battery pack w/ remote test switch. Not available in IC* Note: Housing size may differ. **Above ceiling access required for service** **Not for use with WET LISTED (W) option** **RLD30** - 30º Reflector **RLD50** - 50º Reflector

8 ← Use **8** suffix to order trim that uses 80° reflector only → 80
Do **not** include **8** suffix when ordering 30°or 50°reflector

USAI®
www.usailighting.com
info@usailighting.com
1126 River Road
New Windsor, NY 12553
T 845–565–8500
F 845–561–1130

©2011. USAI, LLC.
All rights reserved.
All designs protected by copyright.
Revised 04/11/12

Project: IERBYS TEMPORARY IMPROVEMENTS
HLB Project #: 12141
Project ID 04-15000182

March 17th, 2015
Final Permit Set
265100-Lighting Fixtures, Lamps, Ballasts

Type: F4

LIGHTING CONTROL CUT SHEET Note: This document is for information only. Refer to specifications for all catalog numbers, etc.

DocuSign Envelope ID: 330DEBD6-9A9E-4F34-BDCC-1AC1BAA701E9

BeveLED® LED Downlight

PERFORMANCE SUMMARY

BeveLED Downlight, 50° Beam, 20W
3020-10-LRTD4-9020-C1-30-50-NC-120V
LTL Report No. : 20486
Spacing Criteria: .75 **CBCP: 1259**

LIGHTING PERFORMANCE DATA

Ceiling Height (FT)	Initial Footcandles	Beam Diameter @ 50°
6.0	35.0	4.5
8.0	19.7	6.1
10.0	12.6	7.5
12.0	8.7	9.0
14.0	6.9	10.5

DISTRIBUTION CURVE

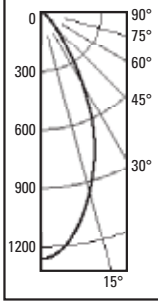

CANDELA

Degrees	At 0°	At 90°
90	0	0
85	1	1
75	5	5
65	17	17
55	33	33
45	81	81
35	247	247
25	611	611
15	949	949
5	1214	1214
0	1259	1259

ZONAL LUMEN SUMMARY

Zone	Lumens	% of Lamp	% of Luminaire
0-30	651.1	N/A	70.0%
0-40	809.5	N/A	87.0%
0-60	905.7	N/A	97.4%
0-90	930.1	N/A	100.0%
90-180	0.0	N/A	0.0%
0-180	930.1	N/A	100.0%

Total lumen Output: 930.1 Lumens
Luminaire Efficacy: 46.8 Lumens per Watt
CIE Type: Direct
Spacing Criterion: 0.75

BeveLED Downlight, 30° Beam, 20W
3020-10-LRTD4-9020-C1-30-30-NC-120V
LTL Report No. : 20484
Spacing Criteria: .47 **CBCP: 2777**

LIGHTING PERFORMANCE DATA

Ceiling Height (FT)	Initial Footcandles	Beam Diameter @ 50°
6.0	77.1	2.8
8.0	43.4	3.7
10.0	27.8	4.7
12.0	19.3	5.6
14.0	14.2	6.5

DISTRIBUTION CURVE

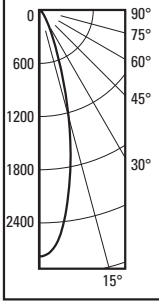

CANDELA

Degrees	At 0°	At 90°
90	0	0
85	1	1
75	3	3
65	10	10
55	18	18
45	37	37
35	99	99
25	340	340
15	1243	1243
5	2561	2561
0	2777	2777

ZONAL LUMEN SUMMARY

Zone	Lumens	% of Lamp	% of Luminaire
0-30	723.2	N/A	85.4%
0-40	787.7	N/A	93.0%
0-60	833.2	N/A	98.4%
0-90	846.7	N/A	100.0%
90-180	0.0	N/A	0.0%
0-180	846.7	N/A	100.0%

Total lumen Output: 846.7 Lumens
Luminaire Efficacy: 42.6 Lumens per Watt
CIE Type: Direct
Spacing Criterion: 0.47

BeveLED Downlight, 50° Beam, 10W
3020-10-LRTD4-9010-C1-30-50-NC-120V
LTL Report No. : 20710
Spacing Criteria: .71 **CBCP: 766**

LIGHTING PERFORMANCE DATA

Ceiling Height (FT)	Initial Footcandles	Beam Diameter @ 50°
6.0	21.3	4.3
8.0	12.0	5.7
10.0	7.7	7.1
12.0	5.3	8.5
14.0	3.9	9.9

DISTRIBUTION CURVE

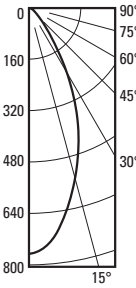

CANDELA

Degrees	At 0°	At 90°
90	0	0
85	1	1
75	3	3
65	9	9
55	18	18
45	46	46
35	138	138
25	341	341
15	549	549
5	734	734
0	766	766

ZONAL LUMEN SUMMARY

Zone	Lumens	% of Lamp	% of Luminaire
0-30	374.2	N/A	70.6%
0-40	463.0	N/A	87.5%
0-60	517.3	N/A	97.5%
0-90	530.4	N/A	100.0%
90-180	0.0	N/A	0.0%
0-180	530.4	N/A	100.0%

Total lumen Output: 530.4 Lumens
Luminaire Efficacy: 52.9 Lumens per Watt
CIE Type: Direct
Spacing Criterion: 0.71

BeveLED Downlight, 30° Beam, 10W
3020-10-LRTD4-9010-C1-30-30-NC-120V
LTL Report No. : 20708
Spacing Criteria: .47 **CBCP: 1639**

LIGHTING PERFORMANCE DATA

Ceiling Height (FT)	Initial Footcandles	Beam Diameter @ 50°
6.0	45.5	2.8
8.0	25.6	3.7
10.0	16.4	4.7
12.0	11.4	5.6
14.0	8.4	6.5

DISTRIBUTION CURVE

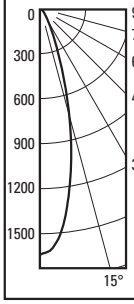

CANDELA

Degrees	At 0°	At 90°
90	0	0
85	0	0
75	1	1
65	6	6
55	10	10
45	21	21
35	58	58
25	202	202
15	738	738
5	1510	1510
0	1639	1639

ZONAL LUMEN SUMMARY

Zone	Lumens	% of Lamp	% of Luminaire
0-30	428.5	N/A	85.5%
0-40	466.6	N/A	93.2%
0-60	493.3	N/A	98.5%
0-90	500.9	N/A	100.0%
90-180	0.0	N/A	0.0%
0-180	500.9	N/A	100.0%

Total lumen Output: 500.9 Lumens
Luminaire Efficacy: 50.0 Lumens per Watt
CIE Type: Direct
Spacing Criterion: 0.47

Note: Above data shown using 80+ CRI. 90+ CRI, de-rate data by approximately 20%.

USAI®

www.usailighting.com
info@usailighting.com
1126 River Road
New Windsor, NY 12553
T 845–565–8500
F 845–561–1130

©2011. USAI, LLC.
All rights reserved.
All designs protected by copyright.
Revised 04/11/12

Project: IERBYS TEMPORARY IMPROVEMENTS
HLB Project #: 12141
Project ID 04-15000182

March 17th, 2015
Final Permit Set
265100-Lighting Fixtures, Lamps, Ballasts

Type: F4

LIGHTING CONTROL CUT SHEET Note: This document is for information only. Refer to specifications for all catalog numbers, etc.

DocuSign Envelope ID: 330DEBD6-9A9E-4F34-BDCC-1AC1BAA701E9

BIRCHWOOD lighting

www.birchwoodlighting.com

WP SYSTEM

Sliding Adjustable Staggered

Single or Double T5/T5HO or T8

Multi-Application Sliding Strip

With a vast assortment of ultra-minimal housing profiles that can accommodate T5/T5HO or T8 linear lamps, WP SYSTEM Specification Grade Strip fixtures are the perfect choice when less is best.

Choose from many styles, including: side mount, diagonal, adjustable staggered or individual modules in shorter lengths. Whatever your specification requires, WP SYSTEM fixtures can deliver strong light while providing durability and value to any interior project: commercial, architectural, residential or retail.

Reflectors and various accessories (on some models) combined with dimming capabilities, or emergency battery options complete the make-up for one of our most popular and enduring product lines.

UL and c-UL listed for dry and damp locations.

Made in the USA

FIXTURE SPECIFICATIONS

Construction
Die-formed heavy duty 20 gauge steel construction. Post-formed high reflectivity white powder coat finish provides smooth edges, rust-resistance and even coverage on entire fixture.

Lamping and Ballast
Single or double T5, T5HO or T8 linear fluorescent lamps in cross section. Integral electronic ballast standard. Dimming and (EM) Emergency battery pack options available. Consult factory for availability and specifications.

Finishes
Post-formed high-reflectivity white powder coat finish. Custom colors available - consult factory.

Mounting
Suitable for surface mounting in multiple applications. Ideal for cove or soffit. Compatible for field thru-wiring.

Fixture Length
Fixtures are available in nominal lengths of 2, 3, and 4 feet. Continuous run mounting and thru-wire compatibility.

Custom and Mods
We proudly specialize in manufacturing custom and modified luminaires and have the ability to modify most of our standard fixtures. Please contact factory with any inquiries.

V-1012B

Birchwood Lighting • 1302 East Hunter Avenue • Santa Ana, CA 92705 • 714.550.7118 fax 714.550.7151

Project: IERBYS TEMPORARY IMPROVEMENTS
HLB Project #: 12141
Project ID 04-15000182

March 17th, 2015
Final Permit Set
265100-Lighting Fixtures, Lamps, Ballasts

Type: F5

LIGHTING CONTROL CUT SHEET Note: This document is for information only. Refer to specifications for all catalog numbers, etc.

DocuSign Envelope ID: 330DEBD6-9A9E-4F34-BDCC-1AC1BAA701E9

BIRCHWOOD lighting

www.birchwoodlighting.com

WP SYSTEM

Sliding Adjustable Staggered

Single or Double T5/T5HO or T8

Type: Job Name:

Multi-Application Sliding Strip

SPECIFICATION CODE

WP- _____ _____ _____ _____ _____ _____ _____

lamps model length finish voltage ballast options

Lamps	Model	Nominal Length	Finish	Voltage[1]	Ballast	Options
T5 **T5HO** **T8**	**1STSAS -** 1 Lamp Sliding Adjustable Stagger **2STSAS -** 2 Lamp Sliding Adjustable Stagger	**2** - 2' **3** - 3' **4** - 4' **CR_** Continuous Run[2]	**HRW** - High Reflectivity White (standard) **CUP** - Custom Paint	**120** **277**	**EB** - Electronic (standard) **Dimming** **HL3** - Hi-Lume **ES** - EcoSystem **ESH** - EcoSystem H-Series **0-10V** - 0-10V	**EM**[3] - Emergency Battery Pack

NOTES
1 other voltages available, consult factory
2 CR fixtures are field thru-wire compatible
3 not available in all lengths, consult factory

Dimensions

1STSAS or 2STSAS T5/T5HO

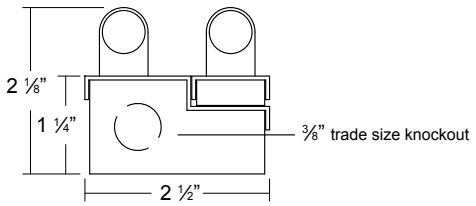

1STSAS or 2STSAS T8

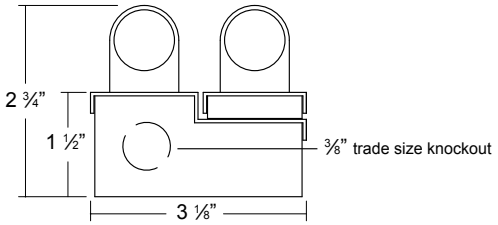

1STSAS T5/T5HO/T8

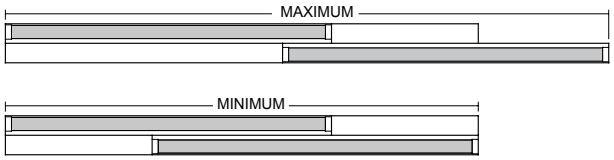

2STSAS T5/T5HO/T8

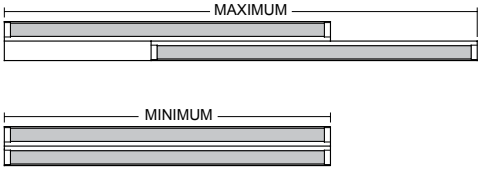

1STSAS T5/T5HO extension table

Nominal	Min/Max Lengths	
T5 or T5HO	Min	Max
2'	31 ½"	41"
3'	49 ¼"	64 ½"
4'	67"	88 ¼"

1STSAS T8 extension table

Nominal	Min/Max Lengths	
T8	Min	Max
2'	34 ½"	44 ½"
3'	52 ½"	68 ½"
4'	70 ½"	92 ½"

2STSAS T5/T5HO extension table

Nominal	Min/Max Lengths	
T5 or T5HO	Min	Max
2'	22 7/16"	32 ⅛"
3'	34 ¼"	49 ⅞"
4'	46 1/16"	67 9/16"

2STSAS T8 extension table

Nominal	Min/Max Lengths	
T8	Min	Max
2'	24"	34 ¾"
3'	36"	52 ¾"
4'	48"	70 ¾"

V-1012B

Birchwood Lighting • 1302 East Hunter Avenue • Santa Ana, CA 92705
714.550.7118 fax 714.550.7151

Due to a program of continuous improvement specifications are subject to change without notice.
© 2012 Birchwood Lighting, Inc. All rights reserved.

Project: IERBYS TEMPORARY IMPROVEMENTS
HLB Project #: 12141
Project ID 04-15000182

March 17th, 2015
Final Permit Set
265100-Lighting Fixtures, Lamps, Ballasts

Type: F5

LIGHTING CONTROL CUT SHEET Note: This document is for information only. Refer to specifications for all catalog numbers, etc.

DocuSign Envelope ID: 330DEBD6-9A9E-4F34-BDCC-1AC1BAA701E9

Job Name Here	Fixture Type Here
Designer/Firm Name Here	Ordering Information Here

LUMELEX® 2026 SERIES 120/277V • LED

Remote phosphor technology produces high quality, high output light with a consistent, even field for the most demanding applications of museum and retail accent lighting.

- Designed for the Xicato™ LED module up to 40 Watts
- Energy Star qualified with system efficiency up to 57 lumens/watt
- Exceeds ANSI specifications by maintaining extremely tight color consistency over the life of the module (within 2 MacAdam Ellipses)
- Tested to LM79 and LM80 Protocols
- 50,000 hour life to 70% lumen output, L_{70} at 95° ambient
- Integral electronic driver
- Field changeable reflectors (10°, 20°, 40° and 60°) modify the beam spread distribution
- Tool-mounted reflector (12°)
- Choice of lumen outputs (delivered lumens)
- Choice of color temperature
- Color Rendering Index (CRI) of either 97+/-2 (high) or 80+ (standard)
- Accessory holder accepts up to two size-AA LSI filters and accessories
- No UV or IR emissions; no mercury or lead
- On/off safety switch (on most mounting types)
- Available with LSI standard mounting options
- Dimmable with trailing edge electronic low voltage dimmers
- Integral dimmer available on 25 watt models or less (track or canopy mount only)
- Sturdy aluminum housing
- Vertical and horizontal allen key wrench locking
- Finishes: LSI Black, White, Silver and Graphite
- Fixture weight: 3.25 lbs

MOUNTING OPTIONS

Please review the **ORDERING INFORMATION** section on the next page on how to specify the following:

- Lumens/CRI/Wattage
- Color Temperature
- Reflector - mm/beam spread

LX2026-XXXX-00
Lexan fitting for 1 and 2 circuit LSI track. With On/Off switch.

LX2026-XXXX-BUS
Lexan fitting for 1 and 2 circut LSI Busway. With On/Off switch.

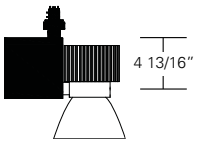

LX2026-XXXX-2G
Universal fitting for Unistrut Systems and any screw or bolt-up applications. With switch, 6-foot 3-wire grounding cord and NEMA 5-15P plug.

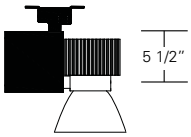

LX2026-XXXX-3G
C-clamp for pipes from 5/8" to 2" O.D. With switch, 6-foot 3-wiregrounding cord and NEMA 5-15P plug.

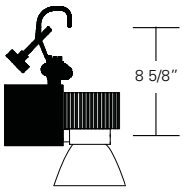

LX2026-XXXX-5A
Canopy for permanent mounting on standard 4" octagonal outlet boxes.

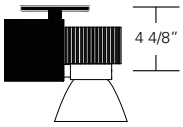

Other Options (Consult Factory):

- Stems, specify length
- Custom color, RAL palette
- Security/Worklite Fixture, add suffix **—EF00** (track) and **—EFBUS** (Busway) mounting option only.

Project: IERBYS TEMPORARY IMPROVEMENTS
HLB Project #: 12141
Project ID 04-15000182

March 17th, 2015
Final Permit Set
265100-Lighting Fixtures, Lamps, Ballasts

Type: F6 Series

LIGHTING CONTROL CUT SHEET Note: This document is for information only. Refer to specifications for all catalog numbers, etc.

DocuSign Envelope ID: 330DEBD6-9A9E-4F34-BDCC-1AC1BAA701E9

Job Name Here	Fixture Type Here
Designer/Firm Name Here	Ordering Information Here

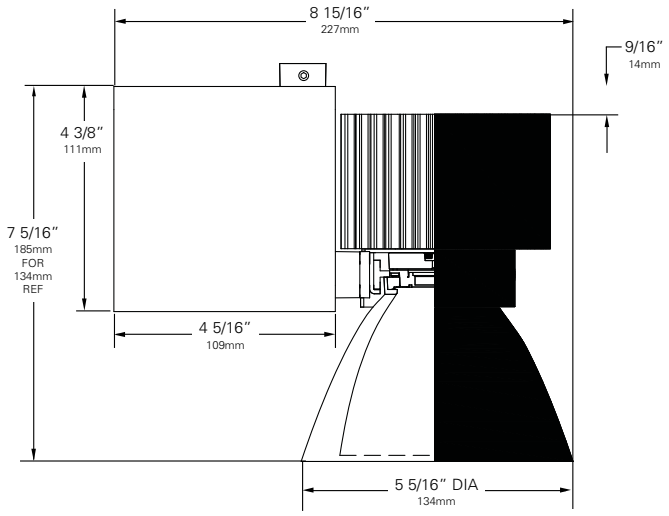

ORDERING INFORMATION

1. If a 277V unit is required, add **V** before the unit number.
2. Choose the letter code to designate the desired **LED Rating/CRI/Wattage**
   (E) for 860/97/25 **(F)** for 1120/80/25
   (G) for 1120/97/34 **(H)** for 1800/80/40
3. Choose the numeric code to designate the desired **Color Temperature** (+/- 50K)
   (2) for 2700K **(3)** for 3000K **(4)** for 4000K **(5)** for 3500K
4. Choose the alpha-numeric code to designate the desired **Reflector** - mm/beam spread
   (M1) for 70mm/10° **(M2)** for 70mm/20°
   (M4) for 70mm/40° **(M6)** for 70mm/60°
   (L2) for 94mm/20° **(H1)** for 134mm/12°
5. Select your **Mounting Option**
6. Choose other fixture Options (add suffix):
   - For Coiled Cord, add **CC**. Coiled Cord is 18/3 105°C, 18" retracted, 6 foot extended. White fixtures are supplied with white cord, all other finishes are supplied with black cord. Available only with **2G** and **3G** mounting options. (When a coiled cord is not specified, a straight cord is provided.)
   - For Integral Dimmer, add **D**. Available on models 25 watts or less. (Note: track fitting changes from – 00 to – 00E to house dimmer)
7. Choose a **Finish** for your fixture:
   Black **(B)** White **(W)** Silver **(S)** Graphite **(G)**
   Example: **V** (277Volt) **LX2026** (Fixture) - **H** (Rating) **3** (CAT) **H1** (Reflector) - **00** (Fitting) **CC** (Coiled Cord) **B** (Finish)
   Blue fields are optional. Leave blank if not required.
8. Don't forget your Accessories!

F, G, H models only

DRIVER TYPE (Electronic)

700 mA Dimmable Driver — Compatible with Low Voltage Electronic Dimmers. See Dimming application sheet.

LED letter code:	E	F	G	H
Input Power (A) - 120V	0.5	0.5	0.8	0.8
Input Power (A) - 277V	0.13	0.13	0.4	0.4
Wattage	25	25	34	40
Power Factor - 115V	0.92	0.92	0.92	0.92

Click for detailed photometrics

ACCESSORIES

Note: suffix "M" = 70mm diameter reflector; suffix "L" = 94mm diameter reflector; suffix "H"=134mm diameter reflector

- **LX2024-Holder**
- **Hood 2IN AA***
- **Hood 2IN LXH**
- **Hood 4IN LXH**
- **ANG Hood 2IN AA***
- **Backer Ring AAB***
- **LX2024 Barndoor**
- **Louver Hex AA***
- **Glass Color Filters AA***
- **Spread Lens AA990, AA992, AA995, AA996***
- **Beam Softener AA998***
- **Light Blocking Screens AA801S, AA802S, AA803S***
- **Gel Holder LXM, LXL, or LXH**
- **Louver Hex LXM, LXL, or LXH****
- **Light Blocking Screens LXM, LXL, or LXH: 801S, 802S, 803S****
- **Color and Spread Gels LXM, LXL, or LXH****
- **LX-M10-REF (70mm/10°)**
- **LX-M20-REF (70mm/20°)**
- **LX-M40-REF (70mm/40°)**
- **LX-M60-REF (70mm/60°)**
- **LX-L20-REF (94mm/20°)**
- **LX-H12-REF (134mm/12°)**

* LX2024-Holder or Barndoor required for use with size AA accessories.

** Gel Holder required for use with LXM, LXL, or LXH accessories.

Click to view LumeLEX Accessories

Project: IERBYS TEMPORARY IMPROVEMENTS
HLB Project #: 12141
Project ID 04-15000182

March 17th, 2015
Final Permit Set
265100-Lighting Fixtures, Lamps, Ballasts

Type: F6 Series

LIGHTING CONTROL CUT SHEET Note: This document is for information only. Refer to specifications for all catalog numbers, etc.

DocuSign Envelope ID: 330DEBD6-9A9E-4F34-BDCC-1AC1BAA701E9

SURFACE TRACK (120/250V) • SPECIFICATIONS

GENERAL Lighting Track shall allow fixtures to be located anywhere along the track length. Fixtures shall be easily focused, switched, dimmed, accessorized and removed as desired. Track system shall have a ten year warranty from date of shipment.

MECHANICAL Lighting Track shall be constructed of .070 (2mm) extruded aluminum with overall height of 1.42 (36mm) and overall width of 1.812 (46mm). Track shall have same overall dimensions and physical appearance for both one and two circuit models.

Track shall be available in nominal 4 foot (1.2m), 8 foot (2.4m), and 12 foot (3.7m) lengths, in Silver, Black, White, or Graphite high temperature baked paint finish. Track shall be field cuttable to any length with a single cut.

Track system shall be available with End Feed, End Cap, Straight Mini-Joiner, Straight Joiner/Feeder, Flexible Joiner and L, T, and X Joiner/Feeders as standard components.

Track shall have the ability to be directly surface mounted. Track shall have pre-punched mounting slots for direct mounting to any surface. Track shall have the ability to: be mounted 1/2 inch (13mm) from a surface by extruded aluminum mounting clips, be suspended from a surface by a field cuttable stainless steel cable system, be suspended from a surface by a field cuttable steel stem system, and be mounted into UniTrack housing.

ELECTRICAL Lighting Track and components shall be UL and CUL listed, CE Certified, and comply with the National Electric Code standards for Lighting Track. One and two circuit Lighting Track shall be rated at 120/250 volt, 50/60 Hz. 2400 watts maximum each circuit. Each 20 amp/120 volt circuit shall be comprised of flat copper busbars and have a separate neutral busbar for each circuit busbar. The neutral busbar shall be oversized to be comparable to #10 gauge 30 amp wire to reduce the possibility of overheating due to non-linear loads and harmonics. **Track shall have integral wiring channels for six (6) additional #12 THHN wires to create three (3) additional 20 amp/120 volt circuits, which can be dropped into any Joiner/Feeder, for a total track power capacity of 100 amps.** A separate grounding busbar shall be integral in all track lengths. All busbars shall be insulated to prevent contact with aluminum extrusion.

Track shall have electric feed capability through all Joiner/Feeders (except Flexible Joiner and Straight Mini-Joiner) using either 1/2 or 3/4 U.S. trade size knock-outs (.875 diameter [22mm] or 1.125 diameter [29mm]). Joiner/Feeders can be electrically field modified by removing the Lexan™ cover and rerouting internal pre-wired jumpers. All Joiner/Feeders shall be available in Black, White, Silver, and Graphite GE fiber reinforced Lexan™.

One and two circuit Lighting Track with separate neutral busbars shall have the ability to have each circuit separately dimmed as required when using standard voltage and low voltage fixtures with either magnetic or electronic transformers. Track shall have the ability to be dimmed or switched in selected sections in addition to dimming or switching an entire track configuration or track run.

FIXTURE FITTING INTERFACE Track shall accept GE fiber reinforced Lexan™ fixture fittings which positively lock into track and cannot be energized by the integral switch until safety interlock handle is in the closed position. Safety interlock shall also prevent fixture fitting removal from track unless the switch is in the "off" position. Upon insertion of fixture fitting into track, grounding connection from fixture fitting to track shall be automatically completed before any electrical contact is made with busbars. When removing fixture fitting from track, the grounding connection shall automatically be disconnected last. The fixture fitting shall recess into the track, creating a minimal profile below the track. Fixture fittings for magnetic low voltage fixtures shall be furnished with fuse of the correct ampere rating for integral transformer protection, and shall not be fused as a branch circuit.

One Ckt 120/250V Track

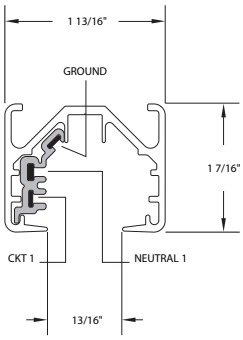

Two Ckt 120/250V Track

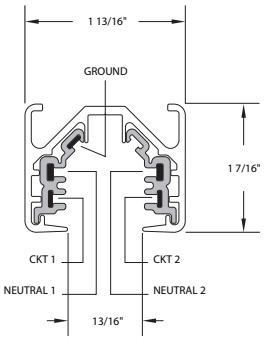

Project: IERBYS TEMPORARY IMPROVEMENTS
HLB Project #: 12141
Project ID 04-15000182

March 17th, 2015
Final Permit Set
265100-Lighting Fixtures, Lamps, Ballasts

Type: F6T

LIGHTING CONTROL CUT SHEET Note: This document is for information only. Refer to specifications for all catalog numbers, etc.

DocuSign Envelope ID: 330DEBD6-9A9E-4F34-BDCC-1AC1BAA701E9

SURFACE TRACK (120/250V) • COMPONENTS

Key Features / Applications

UL and CUL listed, CE Certified, Dry Location • IBEW union made at LSI plant in USA • Specification grade heavy duty .070 (2mm) extruded aluminum track • 4 foot (1.2m), 8 foot (2.4m) and 12 foot (3.7m) field cuttable lengths • One circuit 20 amp or two circuit 40 amp capacity/120/250 volt • 100 amp total capacity when using integral wireways • Copper busbars equivalent to #12 AWG wire used as circuit and ground track conductors • Oversized copper busbars equivalent to #10 AWG wire used as neutral track conductors • Separate neutral track conductor used for each circuit • Separate copper grounding busbar used throughout track system • Black, White, Silver, and Graphite finishes • All Joiner/Feeders, Flexible Joiners, Mini-Joiners, End Feeds and End Caps are injection molded of GE fiber reinforced Lexan™ • All Joiner/Feeders and Flexible Joiners are prewired and simply couple into track • All Joiner/Feeder circuits can be easily field modified by changing internal jumper wires • Fixture fitting recesses into track for minimum profile • LSI surface track can be mounted directly to any surface 5'-0" above finished floor.

Surface Track Sections

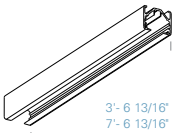

120/250V Surface Track Sections are used in conjunction with an End Feed, End Cap and a variety of Joiner/Feeders to form track runs and configurations. Track Section lengths are nominal 4 foot (1.2m), 8 foot (2.4m) and 12 foot (3.7m) which are field cuttable.

		Nominal Length		
Finish		4 ft	8 ft	12 ft
Silver	One Ckt	31010	31020	31030
	Two Ckt	32010	32020	32030
Black	One Ckt	31210	31220	31230
	Two Ckt	32210	32220	32230
White	One Ckt	31310	31320	31330
	Two Ckt	32310	32320	32330
Graphite	One Ckt	31410	31420	31430
	Two Ckt	32410	32420	32430

Bridge Track

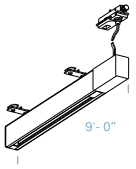

120/250V Bridge Track is a complete, portable, field cuttable, surface UniTrack system that mechanically and electrically mounts to and spans parallel runs of LSI Track. Bridge Track provides an additional range of striking angles for track lighting fixtures or for centering a fixture over a target located between parallel runs of track up to 8 foot (2.4m) on center.

Finish		9 ft
Silver	One Ckt	31025
Black	One Ckt	31225
White	One Ckt	31325
Graphite	One Ckt	31425

Emergency/Worklite Track

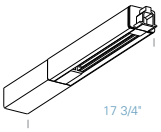

120/250V Emergency/Worklite Track is a separately fed one circuit Track Section, suitable for most LSI track fixtures, that integrates into any LSI Track run or configuration at any location. Consult fixture cutsheet. LSI fixtures (add suffix EF) mechanically lock into Emergency/Worklite Track by means of special hardware and do not have on/off switches.

	All One Ckt			
Finish	18" Joiner Section	18" End Feed Section	18" End Cap Section	18" Conduit End Feed Section
Silver	31050	31051	31052	31053
Black	31250	31251	31252	31253
White	31350	31351	31352	31353
Graphite	31450	31451	31452	31453

Unimount

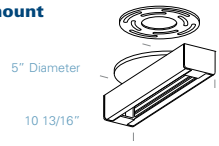

120/250V Unimount is a compact canopy mount Track section which will accept most single LSI Track fixtures up to 500 watts.

Finish		
Silver	One Ckt	31161
Black	One Ckt	31261
White	One Ckt	31361
Graphite	One Ckt	31461

End Feed

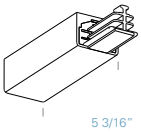

120/250V End Feed is used in conjunction with a Canopy Kit for top feeding from a recessed outlet box and can also be top fed directly with cable.

Finish		
Silver	One Ckt	31100
	Two Ckt	32100
Black	One Ckt	31200
	Two Ckt	32200
White	One Ckt	31300
	Two Ckt	32300
Graphite	One Ckt	31400
	Two Ckt	32400

Project: IERBYS TEMPORARY IMPROVEMENTS
HLB Project #: 12141
Project ID 04-15000182

March 17th, 2015
Final Permit Set
265100-Lighting Fixtures, Lamps, Ballasts

Type: F6T

LIGHTING CONTROL CUT SHEET Note: This document is for information only. Refer to specifications for all catalog numbers, etc.

DocuSign Envelope ID: 330DEBD6-9A9E-4F34-BDCC-1AC1BAA701E9

End Feed for Conduit Connector

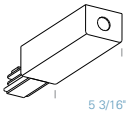

120/250V End Feed for Conduit Connector is used when feeding directly into the end of an End Feed. Connector supplied with 1/2" US trade size hole.

Finish		
Silver	One Ckt Two Ckt	**31102** **32102**
Black	One Ckt Two Ckt	**31202** **32202**
White	One Ckt Two Ckt	**31302** **32302**
Graphite	One Ckt Two Ckt	**31402** **32402**

Portable Feed

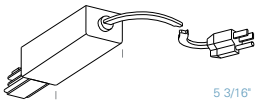

120/250V Portable Feed is used when a portable or temporary track hookup is desired. Supplied with 15 foot #16 AWG-10 Amp/125 Volt 3 wire flexible cord with NEMA 5-15P grounding plug. Non-UL listed.

Finish		
Silver	One Ckt	**31101**
Black	One Ckt	**31201**
White	One Ckt	**31301**
Graphite	One Ckt	**31401**

Straight Joiner/Feeder

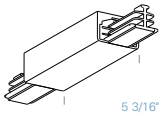

120/250V Straight Joiner/Feeder is used to mechanically and electrically couple any two lengths of track in a straight line. Straight Joiner/Feeder can also be top fed to energize the track from a recessed outlet box when used in conjunction with appropriate Canopy Kit or can be top fed directly with cable.

Finish		
Silver	One Ckt Two Ckt	**31104** **32104**
Black	One Ckt Two Ckt	**31204** **32204**
White	One Ckt Two Ckt	**31304** **32304**
Graphite	One Ckt Two Ckt	**31404** **32404**

Straight Mini-Joiner

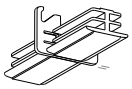

120/250V Straight Mini-Joiner is used to mechanically and electrically couple any two lengths of track in a straight line. Add .125 (3mm) for Straight Mini-Joiner when calculating overall lengths of straight runs or configurations (overall lengths are not the same as when using Straight Joiner/Feeder). Not for use as feeder.

Finish		
Silver	One Ckt Two Ckt	**31111** **32111**
Black	One Ckt Two Ckt	**31211** **32211**
White	One Ckt Two Ckt	**31311** **32311**
Graphite	One Ckt Two Ckt	**31411** **32411**

L Joiner/Feeder

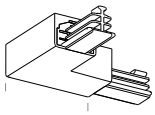

120/250V L Joiner/Feeder is used to mechanically and electrically couple any two lengths of track in an L right angle configuration. This L Joiner/Feeder can also be top fed to energize the track from a recessed outlet box when used in conjunction with appropriate Canopy Kit or can be top fed directly with cable.

Finish		
Silver	One Ckt Two Ckt	**31105** **32105**
Black	One Ckt Two Ckt	**31205** **32205**
White	One Ckt Two Ckt	**31305** **32305**
Graphite	One Ckt Two Ckt	**31405** **32405**

T Joiner/Feeder

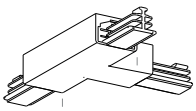

120/250V T Joiner/Feeder is used to mechanically and electrically couple any three lengths of track in a T configuration. This T Joiner/Feeder can also be top fed to energize the track from a recessed outlet box when used in conjunction with appropriate Canopy Kit or can be top fed directly with cable. Internal Joiner wiring can be field modified. Note that in the one circuit version, a right or a left T must be ordered and must be used directly opposite each other when used in a configuration so that busbar continuity is maintained. For two circuit track, a left and right T is not necessary.

Finish		Left Joiner	Right Joiner
Silver	One Ckt Two Ckt	**31106** **32108**	**31107** **32108**
Black	One Ckt Two Ckt	**31206** **32208**	**31207** **32208**
White	One Ckt Two Ckt	**31306** **32308**	**31307** **32308**
Graphite	One Ckt Two Ckt	**31406** **32408**	**31407** **32408**

SURFACE

Project: IERBYS TEMPORARY IMPROVEMENTS
HLB Project #: 12141
Project ID 04-15000182

March 17th, 2015
Final Permit Set
265100-Lighting Fixtures, Lamps, Ballasts

Type: F6T

LIGHTING CONTROL CUT SHEET Note: This document is for information only. Refer to specifications for all catalog numbers, etc.

DocuSign Envelope ID: 330DEBD6-9A9E-4F34-BDCC-1AC1BAA701E9

SURFACE TRACK (120/250V) • COMPONENTS

X Joiner/Feeder

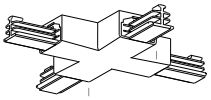

120/250V X Joiner/Feeder is used to mechanically and electrically couple any four lengths of surface track in an X configuration. This X Joiner/Feeder can also be top fed to energize the track from a recessed outlet box when used in conjunction with appropriate Canopy Kit or can be top fed directly with cable.

Finish				
Silver	One Ckt	31109	Two Ckt	32109
Black	One Ckt	31209	Two Ckt	32209
White	One Ckt	31309	Two Ckt	32309
Graphite	One Ckt	31409	Two Ckt	32409

Flexible Joiner

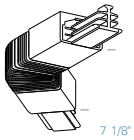

120/250V Flexible Joiner is used to mechanically and electrically couple any two lengths of surface mount track to create angles from 0° (straight) through 90° (right angle). The Flexible Joiner can be flexed in either horizontal or vertical planes. Not for use as feeder.

Finish				
Silver	One Ckt	31112	Two Ckt	32112
Black	One Ckt	31212	Two Ckt	32212
White	One Ckt	31312	Two Ckt	32312
Graphite	One Ckt	31412	Two Ckt	32412

End Cap

120/250V End Cap is used for mechanically ending any straight run, individual Track Section, or open configuration Track Section.

Finish		
Silver	One & Two Ckt	30103
Black	One & Two Ckt	30203
White	One & Two Ckt	30303
Graphite	One & Two Ckt	30403

Current Limiter

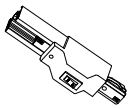

LSI Track Current Limiters integrate directly into single circuit runs, available in the following amperages: 3 AMP (360 Watts); 5 AMP (600 Watts); 8 AMP (960 Watts); 12 AMP (1440 Watts).

Finish	3 AMP	5 AMP	8 AMP	12 AMP
Silver	TCL3S	TCL5S	TCL8S	TCL12S
Black	TCL3B	TCL5B	TCL8B	TCL12B
White	TCL3W	TCL5W	TCL8W	TCL12W
Graphite	TCL3G	TCL5G	TCL8G	TCL12G

Adjustable Angle Bracket

The Adjustable Angle Bracket for Flex Joiner is designed to attach to cable mounted track. This assembly locks the set angle of a Flex Joiner when there is no rigid mounting means.

Finish		
Silver	One & Two Ckt	30116
Black	One & Two Ckt	30216
White	One & Two Ckt	30316
Graphite	One & Two Ckt	30416

Raceway Cover

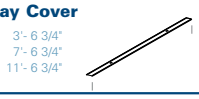

Field cuttable Raceway Covers are used to enclose additional lay-in circuit wiring in top section of track.

	Nominal Length		
Finish	4 Ft	8 Ft	12 Ft
Galvanized	30613	30614	30615

Track U-Ground Outlet

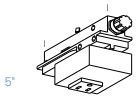

120/250V Track U-Ground Outlet provides a convenient switched and fused U-Ground receptacle for power and is rated at 5A-120V. Non-UL listed.

Finish		
Silver	One & Two Ckt	31160
Black	One & Two Ckt	31260
White	One & Two Ckt	31360
Graphite	One & Two Ckt	31460

Display Hook

Display Hook is used to mechanically hang an item from the track without electrifying it. Do not exceed 20 lbs. at minimum spacing of two feet.

Finish		
Silver	One & Two Ckt	30761

Weight Support Bar

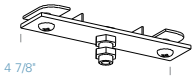

Weight Support Bar provides threaded nipple and nuts to mount an item to track without electrifying it. Do not exceed 20 lbs. at minimum spacing of two feet. Nipple size 1/8-27 NPS (.406 diameter).

Finish		
Silver	One & Two Ckt	30762

Track Closure Cover

Field cuttable Noryl Track Closure Covers are used to enclose the open face of the track, and simply snap into place.

	Nominal Length		
Finish	4 Ft	8 Ft	12 Ft
Silver	30165	30166	30167
Black	30265	30266	30267
White	30365	30366	30367
Graphite	30465	30466	30467

Project: IERBYS TEMPORARY IMPROVEMENTS
HLB Project #: 12141
Project ID 04-15000182

March 17th, 2015
Final Permit Set
265100-Lighting Fixtures, Lamps, Ballasts

Type: F6T

LIGHTING CONTROL CUT SHEET Note: This document is for information only. Refer to specifications for all catalog numbers, etc.

DocuSign Envelope ID: 330DEBD6-9A9E-4F34-BDCC-1AC1BAA701E9

SURFACE TRACK (120/250V) • INSTALLATION

General Notes

When installing or using this track system, basic safety precautions should always be followed, including the following: Read all instructions. Do not install this track in damp or wet locations. Do not install any part of the track system less than five feet from floor. Do not install any fixture assembly closer than six inches from any curtain or similar combustible material. Disconnect electrical power before adding to or changing the configuration of the track. Check with a qualified electrician. Do not attempt to energize anything other than lighting track fixtures on the track. To reduce the risk of fire and electric shock, do not attempt to connect power tools, extension cords, appliances and the like to the track. Install per NEC and local codes. Save these instructions.

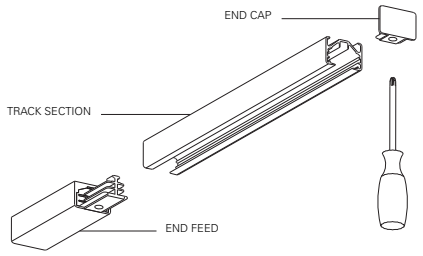

Assembling

Insert End Cap, End Feed or any other Joiner/Feeder completely into Track Section and tighten the recessed Phillips head screw. Do not use excessive force when inserting components into Track Section.

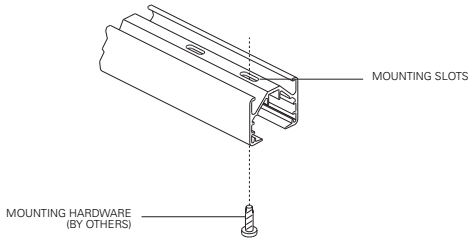

Mounting

Fasten track directly to surface through pre-punched mounting slots with hardware (by others) capable of withstanding a 50 lb. pull. Mount track in compliance with NEC Lighting Track Article #410-101 (Installation), #410-104 (Fastening) and any other applicable codes. To prevent distortion of the track opening which may prevent insertion of fixture fittings, do not over tighten mounting screws. LSI recommends a minimum of two mounting points per section of track. LSI track can be mounted on centers up to 6'- 0".

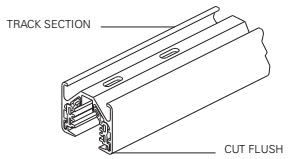

Field Cutting

LSI track can be easily field cut using a sharp hacksaw or a chop saw with a blade for non-ferrous metals, such as Oldham commercial carbide series metal blade. Together, cut the aluminum track, Noryl™ insulation, and copper with one straight cut. All pieces must be exactly the same length. Be sure to remove any burrs on the aluminum or the copper as this may affect the electrical and mechanical interconnection of components to track. Do not cut track to less than one foot in length.

Project: IERBYS TEMPORARY IMPROVEMENTS
HLB Project #: 12141
Project ID 04-15000182

March 17th, 2015
Final Permit Set
265100-Lighting Fixtures, Lamps, Ballasts

Type: F6T

LIGHTING CONTROL CUT SHEET Note: This document is for information only. Refer to specifications for all catalog numbers, etc.

Horton Lees Brogden Lighting Design 8580 Washington Blvd Culver City CA 90232 310 837 0929 voice | 310 837 0902 fax www.HLBlighting.com

DocuSign Envelope ID: 330DEBD6-9A9E-4F34-BDCC-1AC1BAA701E9

SURFACE TRACK (120/250V) • INSTALLATION

Electrical

Remove the Lexan™ cover from any End Feed or Joiner/Feeder, bring wires through combination 1/2, 3/4 U.S. trade size knock-out (.875 diameter [22mm], 1.125 diameter, [29mm]) in conduit plate and attach conductors to identified terminals. Joiner/Feeders can be electrically field modified after removal of Lexan™ cover by rerouting internal pre-wired jumpers.

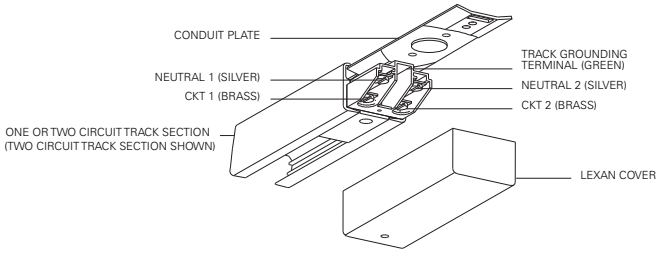

Additional Circuits

LSI Track has integral wiring channels for six additional #12 THHN wires to create three additional 20 amp circuits with separate neutrals. Place conductors in wiring channels and slide raceway covers into track prior to mounting.

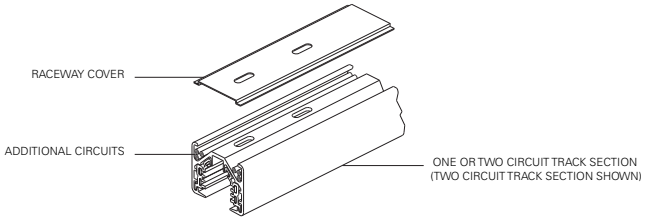

Installing LSI Fixtures

To insert a fixture fitting into the track, the switch must be in the "off" position, with the handle open. Insert the fixture fitting straight up into the track until it seats evenly, close handle completely, switch on. If using one circuit track, make sure that the brass contacts which protrude from the side of the fixture fittings are inserted facing the copper busbars. If using two circuit track, inserting the fixture fitting in one direction will connect to circuit one. Removing and reversing the direction of the fitting will connect to circuit two.

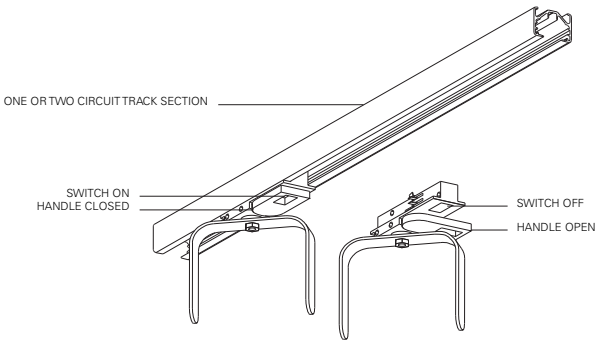

Project: IERBYS TEMPORARY IMPROVEMENTS
HLB Project #: 12141
Project ID 04-15000182

March 17th, 2015
Final Permit Set
265100-Lighting Fixtures, Lamps, Ballasts

Type: F6T

LIGHTING CONTROL CUT SHEET Note: This document is for information only. Refer to specifications for all catalog numbers, etc.

Horton Lees Brogden Lighting Design 8580 Washington Blvd Culver City CA 90232 310 837 0929 voice | 310 837 0902 fax www.HLBlighting.com

DocuSign Envelope ID: 330DEBD6-9A9E-4F34-BDCC-1AC1BAA701E9

TECH LIGHTING®

Unilume LED Undercabinet System

Undercabinet lighting was one of the first applications to go LED. Since that time, there has been little in the way of innovation. That is because most undercabinet fixtures were designed around traditional undercabinet housings and discrete LEDs. The result: Hot spots. Glare. Multiple shadows on the surface. Unnecessarily deep housings. Poor or non-existent dimming.

Until now.

Tech Lighting is proud to introduce Unilume LED undercabinet, the latest innovation in LED undercabinet lighting. Utilizing tightly clustered blue pump LEDs, a 98% reflective mixing chamber and an Intematix ChromaLit™ remote phosphor lens, the result is consistent illumination with ultra high efficiency – all in a housing that is less than ¾ of an inch deep. An integrated LED driver makes installation easy and allows smooth dimming down to 15% using a TRIAC or ELV dimmer.

Perfect not only for the home, but also for the office, retail displays and more.

INDUSTRIES SERVED

Assisted Living
Custom Closets
Display / POP
Healthcare
Hotels
Libraries
Museums
Offices / Cubicles
Residential
Restaurants
Retail
Schools
Universities

CUSTOM CAPABILITIES

Color Temperature
Color Rendering Index (CRI)
Length
Finish

Project: IERBYS TEMPORARY IMPROVEMENTS
HLB Project #: 12141
Project ID 04-15000182

March 17th, 2015
Final Permit Set
265100-Lighting Fixtures, Lamps, Ballasts

Type: F7

LIGHTING CONTROL CUT SHEET Note: This document is for information only. Refer to specifications for all catalog numbers, etc.

DocuSign Envelope ID: 330DEBD6-9A9E-4F34-BDCC-1AC1BAA701E9

TECH LIGHTING'S **UNILUME** LED UNDERCABINET SOLUTION VS. TYPICAL LED UNDERCABINET

Tech Lighting's **Unilume** LED Undercabinet	Typical LED Undercabinet
- **REMOTE PHOSPHOR SOLUTION** Thirty LEDs per foot, 98% reflective mixing chamber and Intematix Chromalit™ remote phosphor lens, consuming just 8.5 and 10.5 watts for the 13" and 19", respectively.	A few discrete LEDs spaced several inches apart.
- **CONSISTENT, EVEN ILLUMINATION** Because the entire remote phosphor lens illuminates, we are able to achieve an extremely consistent and even wash of light. This is both attractive and easier on the eyes when viewed from below.	When viewing the fixture from below, each LED appears extremely glary – particularly in the sight-line of a young child. Unattractive dots of light appear on any reflective surface below like a granite countertop.
- **ELIMINATES DISTRACTING 'MULTI-SHADOWS'** Because the entire remote phosphor lens is illuminated, multiple shadows are not produced. Therefore it is much more desirable to view objects below. This is particularly helpful in a task application (e.g. working on a cutting board) or when displaying merchandise.	Each point source of light hits an object beneath at a different angle and creates a shadow at that angle. For every LED, a unique shadow is created. Thus, a 12 inch LED solution that uses four individual LEDs creates four distracting shadows beneath the object.
- **WIDE BEAM DISTRIBUTION** The entire phosphor lens is illuminated and sits at the surface of the housing creating a much wider beam distribution. This makes it possible to use fewer undercabinet units spread at greater distances with more even output over the entire space.	LEDs are typically recessed into the housing or hidden behind a diffusing lens. This causes light cut-off at the edges.
- **COLOR CONSISTENCY OVER TIME** The phosphor sits away from the LED and remains cooler over time. Therefore the phosphor does not experience the same level of degradation.	Overtime, LEDs can experience some level of color shift. This is caused in large part by the degradation of the phosphor that sits directly on the LED due to heat coming directly off the LED.
- **HIGH EFFICIENCY** With the remote phosphor lens, we do not need a secondary diffusing lens. This helps us achieve 50-60+ lumens per watt depending on length.	In order to minimize glare created by individual LEDs, most traditional products utilize a diffusing lens. This typically creates an efficiency loss of 15% to 35%. In fixtures without a diffusing lens, high efficiency can be achieved at the cost of significant glare.
- **MULTIPLE COLOR TEMPERATURE AND CRI OPTIONS** Offered in 2700K and 3000K color temperatures. Additional color temperatures are easily available on a custom basis (contact the factory). 80+ CRI (Color Rendering Index) or 90+ CRI for more discerning applications.	Typically offered in only a single color temperature option and 80 CRI (Color Rendering Index).
- **INTEGRATED DRIVER AND SMOOTH DIMMING** 120 volt input makes installation easy. Smooth dimming down to 15% using a TRIAC or ELV dimmer. Jumper cables make it easy to link one unit to another. Each unit has an integrated on-off switch.	May require an external power supply making installation more complicated. Dimming may be non-existent or require a more expensive low-voltage electronic dimmer.
- **RUGGED, MINIMALIST DESIGN** Heavy gauge aluminum housing with die-cast steel end-caps and less than ¾ of an inch deep. Can be mounted vertically or horizontally.	Thinner gauge housing and plastic components, often in housings 1-1.5 inches deep.

Project: IERBYS TEMPORARY IMPROVEMENTS
HLB Project #: 12141
Project ID 04-15000182

March 17th, 2015
Final Permit Set
265100-Lighting Fixtures, Lamps, Ballasts

Type: F7

LIGHTING CONTROL CUT SHEET Note: This document is for information only. Refer to specifications for all catalog numbers, etc.

DocuSign Envelope ID: 330DEBD6-9A9E-4F34-BDCC-1AC1BAA701E9

WHAT IS REMOTE PHOSPHOR TECHNOLOGY?

Most white LEDs are actually blue LEDs with a phosphor coating. The phosphor absorbs the blue light and re-emits the photons at longer wavelengths which we perceive as white light. In most lighting applications, the phosphor is directly on the LED chip; and this is the right approach for many applications. However, by utilizing a remote phosphor solution – a linear phosphor lens that sits above the LEDs – we are able to achieve performance levels not possible with traditional LED undercabinet lights.

Project: IERBYS TEMPORARY IMPROVEMENTS
HLB Project #: 12141
Project ID 04-15000182

March 17th, 2015
Final Permit Set
265100-Lighting Fixtures, Lamps, Ballasts

Type: F7

LIGHTING CONTROL CUT SHEET Note: This document is for information only. Refer to specifications for all catalog numbers, etc.

DocuSign Envelope ID: 330DEBD6-9A9E-4F34-BDCC-1AC1BAA701E9

13" Black Shown Off

19" White Shown Off

UNILUME LED UNDERCABINET

700UCF	LENGTH	CRI	COLOR TEMPERATURE	FINISH	LAMP TYPE
	13 13.2"	**8** 80+	**2** 2700K	**B** BLACK	**-LED** LED
	19 19.2"	**9** 90+	**3** 3000KA	**W** WHITE	

TECHNICAL SPECIFICATIONS*

	13" Length	19" Length
System Power:	8.5 watts	10.5 watts
System Lumens:	432	645
System Efficacy:	51 lms/watt	61 lms/watt
Color Temperature:	2700K, 3000K	
Color Rendering Index:	80+, 90+	
Rated Average Life:	50,000 hours to 70%	
Power Factor:	0.94	
Dimming:	To 15% with TRIAC or ELV Dimmer	
Warranty:	5 Years	

*Based on 3000K, 80+ CRI option

ACCESSORIES

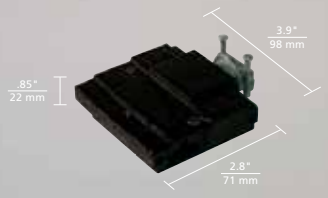

SPLICE BOX

Required for hardwire applications. The 1" Jumper Connector can be used to place the Splice Box next to the Undercabinet Housing or a longer Jumper Connector can be used to place the Splice Box in a more convenient or remote location. Includes Romex/½ conduit connector.

700UCSB	FINISH
	B BLACK
	W WHITE

JUMPER CONNECTORS

Can be used to link one Undercabinet Housing to another or to a Splice Box.

Link up to 71 units of the 13" and 57 units of the 19".

700UCJC	LENGTH*	COLOR
	01 1"	**B** BLACK
	03 3"	**W** WHITE
	12 12"	
	24 24"	

PLUG-IN WALL FEED

Can be used to plug one Undercabinet Housing directly into an outlet.

700UCPL	LENGTH*	COLOR
	24 24"	**B** BLACK
	72 72"	**W** WHITE

*For custom lengths, contact our factory

TECH LIGHTING®

7400 Linder Ave Skokie, IL 60077
T 847 410 4400 F 847 410 4500
www.techlighting.com

921TLUNILUME12

© 2012 Tech Lighting, L.L.C. All rights reserved. The "Tech Lighting" graphic is a registered trademark of Tech Lighting. Tech Lighting reserves the right to change specifications for product improvements without notification.

generation brands

Project: IERBYS TEMPORARY IMPROVEMENTS
HLB Project #: 12141
Project ID 04-15000182

March 17th, 2015
Final Permit Set
265100-Lighting Fixtures, Lamps, Ballasts

Type: F7

LIGHTING CONTROL CUT SHEET Note: This document is for information only. Refer to specifications for all catalog numbers, etc.

DocuSign Envelope ID: 330DEBD6-9A9E-4F34-BDCC-1AC1BAA701E9

luminii
Lighting for the future, today.

Kendo 45-M | Linear illumination system

Extruded aluminum linear illumination system, Kendo 45-M is available in sections up to 76″ long. Specifically designed LED engine provides constant illumination levels from the beginning to the end of the runs. The Kendo 45-M can be easily recessed or surface mounted for general illumination, architectural accents, under and above cabinet lighting, display cases and many other applications. Available with 72″ plenum rated lead wires or quick-connect end feed.

Kendo 45-M

Recessed installation

Surface-mounted with bracket

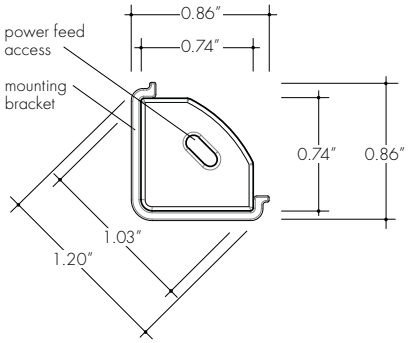

Made in USA

Finish options

Black anodized | Bronze anodized | Silver anodized | White powder coated

Technical information

Light engine: LEDs 2.4 watt/ft (SO - standard output) or 3.2 watt/ft (HO - high output)

CRI: 70+ Standard, 80-91 High

Color temperature: 2400K (only standard CRI), 2700K, 2900K, 3500K (only high CRI), 4000K

Max run length: 40 feet (SO),30 feet (HO)

Operating Voltage: 24 VDC

Dimming: Low voltage magnetic dimmer - see Luminii website for list of compatible dimmers. Luminii PSD series power supply required.

Project: IERBYS TEMPORARY IMPROVEMENTS
HLB Project #: 12141
Project ID 04-15000182

March 17th, 2015
Final Permit Set
265100-Lighting Fixtures, Lamps, Ballasts

Type: F8

LIGHTING CONTROL CUT SHEET Note: This document is for information only. Refer to specifications for all catalog numbers, etc.

DocuSign Envelope ID: 330DEBD6-9A9E-4F34-BDCC-1AC1BAA701E9

luminii
Lighting for the future, today.

Kendo 45-M | Linear illumination system

Power supply

PSD series are remote LED power supplies dimmable with low voltage magnetic dimmers.
Available in 110 and 277 VAC input.

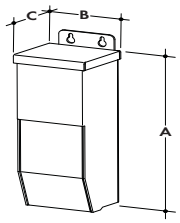

Models	PSD-20-24	PSD-40-24	PSD-60-24	PSD-96-24
A Height	5.03″	5.03″	6.06″	6.10″
B Width	2.14″	2.14″	2.59″	2.60″
C Depth	2.00″	2.00″	2.20″	2.20″
Maximum wattage	20 watt	40 watt	60 watt	96 watt
NEMA 3R outdoor rated	No	No	Yes	Yes

Connectors

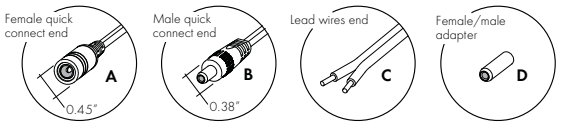

Linking cable options

Male quick disconnect
Part # LMC

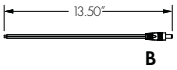

Linking cable 12″
Part # LC-12

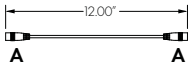

Female quick disconnect
Part # LFC

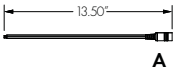

Linking cable 48″
Part # LC-48

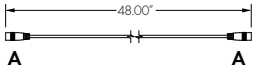

Y-Splitter
Part # LYC

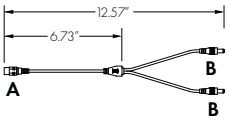

Linking cable 120″
Part # LC-120

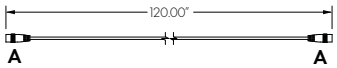

Female/male adapter
Part # FMA

Powerfeed options

F1

F2

F3

F4

Ordering Code

Model	Length	CCT	Output	CRI	Optic	Finish	Mounting	Power Feed
K45M	4	27K	SO	S	C	SA	B	F1
K45M - Kendo 45-M	4″- 76″ 4″ increments	24K - 2400K* 27K - 2700K 29K - 2900K 35K - 3500K** 40K - 4000K	SO - Standard output HO - High output	S - Standard H - High	C - Clear HF - Half-Frosted F - Frosted M - Medium N - Narrow	SA - Silver anodized BK - Black anodized BZ - Bronze anodized WH - White powder coated	B - Mounting brackets NB - No bracket	F1 - 72″ Lead wires F2 - 72″ Lead wires at one end and quick connect at other F3 - Single quick connect F4 - Dual quick connect

*2400K only available with S (standard) CRI
**3500K only available with H (high) CRI

Project: IERBYS TEMPORARY IMPROVEMENTS
HLB Project #: 12141
Project ID 04-15000182

March 17th, 2015
Final Permit Set
265100-Lighting Fixtures, Lamps, Ballasts

Type: F8

LIGHTING CONTROL CUT SHEET Note: This document is for information only. Refer to specifications for all catalog numbers, etc.

DocuSign Envelope ID: 330DEBD6-9A9E-4F34-BDCC-1AC1BAA701E9

luminii
Lighting for the future, today.

Line LED | Linear LED strip - 24V

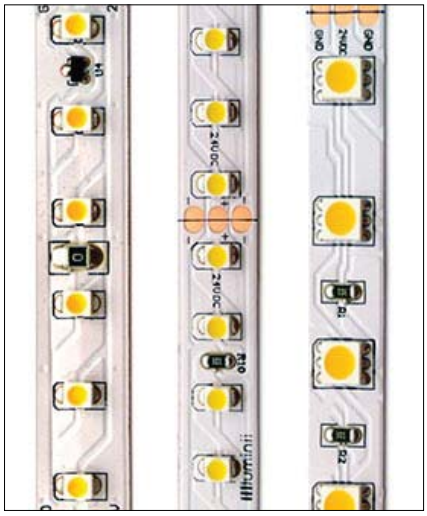

The Line LED is a small profile and energy efficient light strip. It is easily installed directly on to the mounting surface with double sided tape or within discrete mounting extrusions. The durable but flexible circuit board and multiple connector options enable the extension of the light strip and perfect fit for every application.

Applications: Indoor only - above and below cabinets, cove lighting, counter accent, architectural reveals, under banister, display and book cases, etc.

CRI	STANDARD	HIGH
Value range	up to 70	80 - 91
CCT variation	+/- 200K	+/- 75K single bin

Operating voltage
24 VDC

Operating temperature
- 40˚F to 140˚F (- 40˚C to 60˚C)

Average life
50,000 hours

Dimmable
Low voltage magnetic dimmers and PSD series power supply required

Mounting
3M self-adhesive tape. Mounting to an aluminum profile or the HST aluminum heat sink tape is required to reach the rated 50,000 hours average life.

Approvals
Class II damp listed

Technical information

Models	LL2.0	LL2.4	LL3.2
LEDs/ft	36	30	18
Average power consumption	2.0 watt/ft	2.4 watt/ft	3.2 watt/ft
Light output for 2900K	179 lumens/ft	221 lumens/ft	315 lumens/ft
Amperage load at maximum run	4.0 A	4.0 A	4.0 A
Ordering increment	4.00"	2.50"	4.00"
Maximum run length	48 ft	40 ft	30 ft
Dimensions	0.39" W 0.13" H	0.39" W 0.13" H	0.39" W 0.13" H

Section start/end options

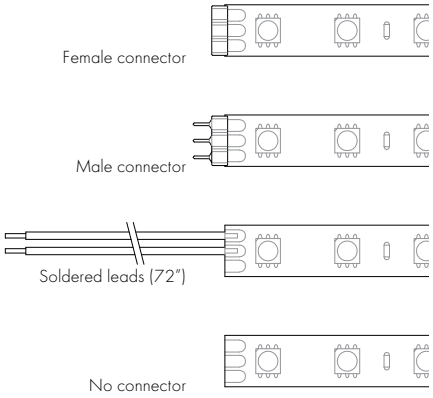

Ordering code

*Please note: LED color temperature availability dependent on CRI of choice

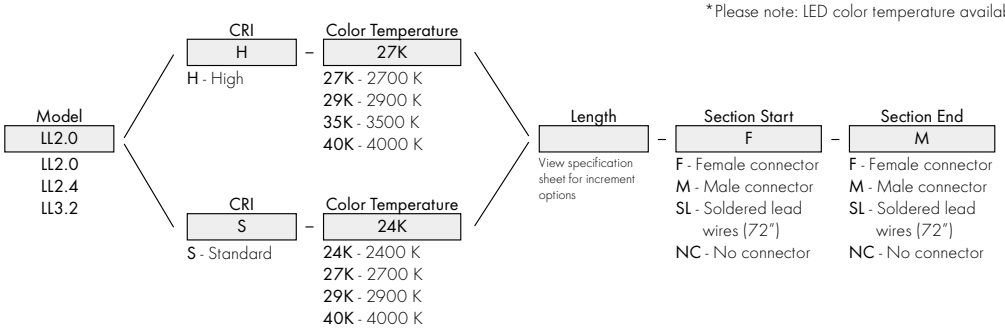

Project: IERBYS TEMPORARY IMPROVEMENTS
HLB Project #: 12141
Project ID 04-15000182

March 17th, 2015
Final Permit Set
265100-Lighting Fixtures, Lamps, Ballasts

Type: F8

LIGHTING CONTROL CUT SHEET Note: This document is for information only. Refer to specifications for all catalog numbers, etc.

DocuSign Envelope ID: 330DEBD6-9A9E-4F34-BDCC-1AC1BAA701E9

WAREHOUSE SHADE

Model No. _____

TYPE: _____

JOB NAME:_____

CERTIFICATION: UL LISTED WET LOCATION

MODEL#	A (Height in Inches)	B (Diameter in Inches)
W508	6	8
W512	8	12
W514	9	14
W516	9	16
W518	9	18
W520	10	20

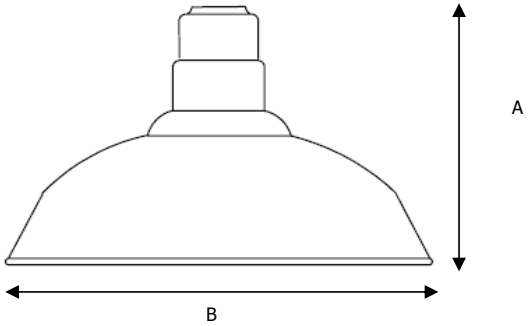

FINISH- Available in high quality powder coat.

LAMP HOLDERS- Accommodates **Incandescent** medium base porcelain socket, copper shell with nicked plate, rated 250V, 660W. **Compact Fluorescent** 4 pin heat resistant thermoplastic socket accommodates 26/32W (Gx24q-3 base) and 42W (Gx24q-4 base). Twist lock design provides for vibration and earthquake resistance, rated 75W, 600V. **High Intensity Discharge (H.I.D.)** medium base, 4KV pulse start socket, rated 660W/600V.

MOUNTING- 1/2" or 3/4" tapped hub is supplied. Top or side mount available. Fixtures are pre-wired with 48" or 96" leads. Available with cord or stem sets.

REFLECTOR- Spun from heavy gauge 1100-0 aluminum, ranging in thickness from .050 to .125. Galvanized is from 20 gauge sheets. Copper is spun from .040 gauge and 110 soft alloy.

MODEL#	FINISH	LIGHT SOURCE		
		INC	CF	HID (MH & HPS)
W508	40,41,42,43,44,45,46,48,49,50, 51,52,53,54,55,57,58,59,60,61, 62,63	100W	26W*	25W*
W512		100W	26,32,OR 42W*	35,50,70, or 100W*
W514		150W	26,32,OR 42W*	35,50,70, or 100W*
W516		200W	26,32,OR 42W*	35,50,70, or 100W*
W518		300W	26,32,OR 42W*	35,50,70,100,150, or 175W*
W520		300W	26,32,OR 42W*	35,50,70,100,150, or 175W*

*** FOR REMOTE BALLAST SEE MOUNTING SOURCE**
GLASS:
MOUNTING SOURCE:
ACCESSORIES:

PHONE: 877-999-1990
FAX: 877-999-1955

12260 EAST END AVE. CHINO, CA 91710

c UL LISTED
wet location

Project: IERBYS TEMPORARY IMPROVEMENTS
HLB Project #: 12141
Project ID 04-15000182

March 17th, 2015
Final Permit Set
265100-Lighting Fixtures, Lamps, Ballasts

Type: FX1

LIGHTING CONTROL CUT SHEET Note: This document is for information only. Refer to specifications for all catalog numbers, etc.

WALL MOUNTS

B10

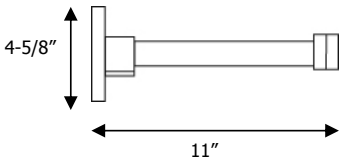

B11

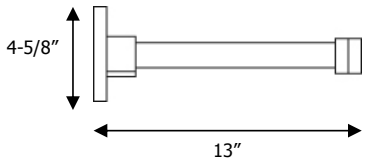

WM10

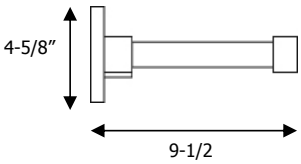

WM11

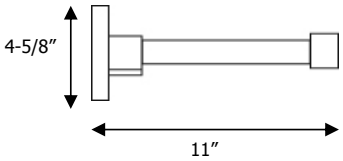

WM12

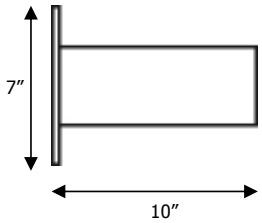

WM13

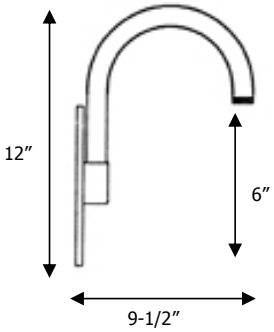

WM13X*

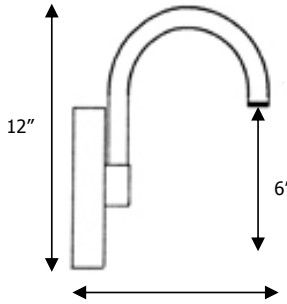

*Compact Flourescent or H.I.D. Housing

WM14

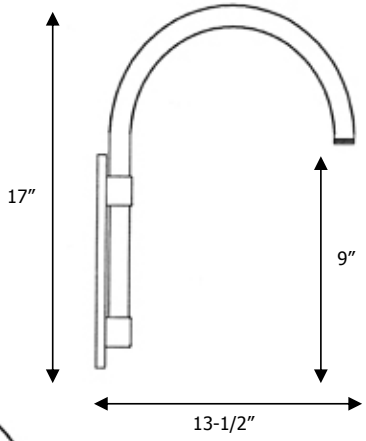

WM25

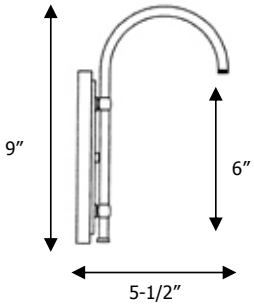

WM15*

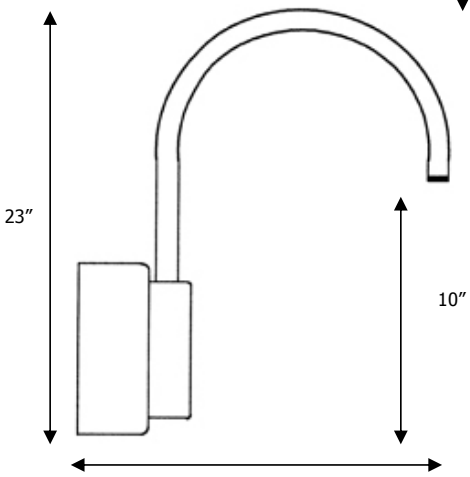

*Compact Flourescent or H.I.D. Housing

WM26

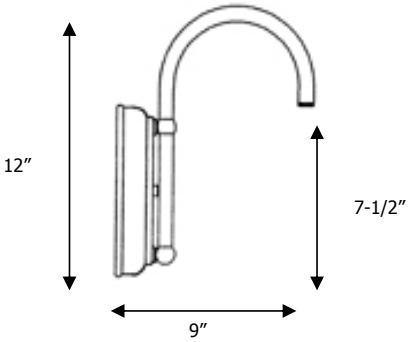

Project: IERBYS TEMPORARY IMPROVEMENTS
HLB Project #: 12141
Project ID 04-15000182

March 17th, 2015
Final Permit Set
265100-Lighting Fixtures, Lamps, Ballasts

Type: FX1

LIGHTING CONTROL CUT SHEET Note: This document is for information only. Refer to specifications for all catalog numbers, etc.

DocuSign Envelope ID: 330DEBD6-9A9E-4F34-BDCC-1AC1BAA701E9

Shade
Vapor Jars
Bollards
Bulkheads
Commercial Retail Lighting
Sign Lighting
Foodwarmers
Mounting Options
Ballast
Literature
Photometric - IES files
Gallery

As Seen On
EXTREME MAKEOVER Home Edition
Visit abc.com for more details

Glass Options

Incandescent or Compact Fluorescent

CL3 CL4 | FR3 FR4 | PR3 PR4 | BL3 BL4 | RE3 RE4 | GR3 GR4 | AH3 AH4

BAX* | OC* | BA* | FN*

BAF

Max. Wattage					
INC-100W	INC-200W	CF-26W	CF-42W		INC-150W
CL3	CL4	BA*	CL3	CL4	FN*
FR3	FR4		FR3	FR4	
PR3	PR4		PR3	PR4	
BL3	BL4		BL3	BL4	
RE3	RE4		RE3	RE4	
GR3	GR4		GR3	GR4	
AH3	AH4		AH3	AH4	
OC*	BAX*		OC*	BAX*	
BA*	BAF*			BAF*	

* Not available with HID lamp source

HID

CLT3 CLT4 | FRT3 FRT4 | PRT3 PRT4

Max. Wattage	

Project: IERBYS TEMPORARY IMPROVEMENTS
HLB Project #: 12141
Project ID 04-15000182

March 17th, 2015
Final Permit Set
265100-Lighting Fixtures, Lamps, Ballasts

Type: FX1

LIGHTING CONTROL CUT SHEET Note: This document is for information only. Refer to specifications for all catalog numbers, etc.

DocuSign Envelope ID: 330DEBD6-9A9E-4F34-BDCC-1AC1BAA701E9

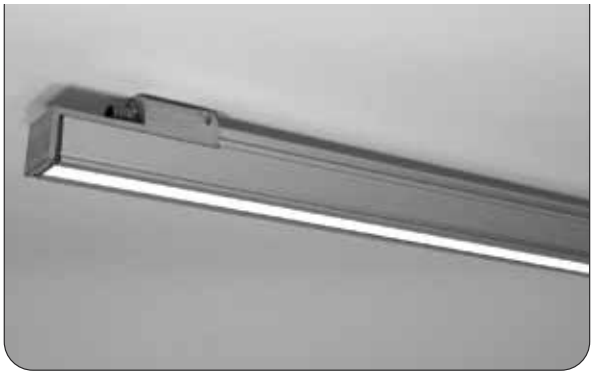

PROJECT NAME :

LUMINAIRE TYPE :

L140W LumiLine | Wet

Construction:
- Extruded aluminum housing with satin anodized finish
- Low profile design with lengths ranging from 20" to 50"
- Proprietary optics are UV stable and optimized for transmission
- Numerous stainless steel and aluminum mounting solutions

Electrical:
- Dimmable, high flux LEDs availalble in either 3000K or 4000K
- Solid state low voltage luminaires powered with 24V DC
- Electronic power supplies can be remotely mounted up to 32' **
- UL listed for wet locations: IP65 rating

Performance:
- Average rated LED life of 50,000 hours @ 70% lumen output*
- IES files can be downloaded at www.electrix.com
- All values below are based on initial lumens per foot

Output	Watts/Ft	3000K white	4000K white
Standard	5 watts/ft	258 lumens/ft	308 lumens/ft
High	10 watts/ft	516 lumens/ft	617 lumens/ft

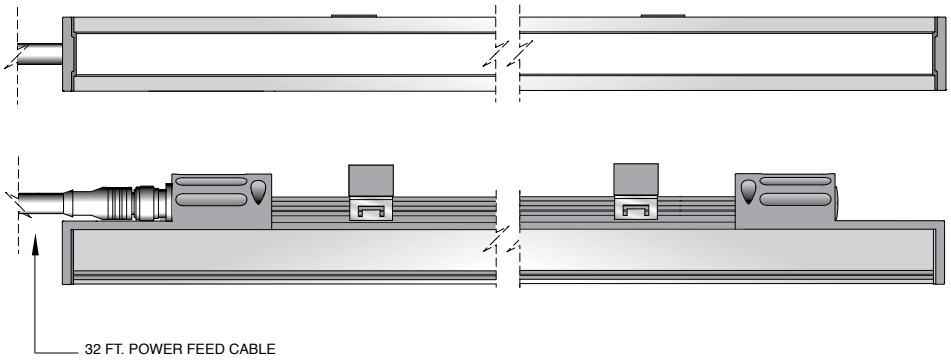

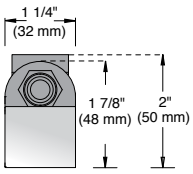

* To ensure proper performance, ambient temperature around luminaire should not exceed 140F. Architectural details should include ventilation around fixture.
** If EMI is a consideration, recommended remote driver distance is 15'

RoHS

Project: IERBYS TEMPORARY IMPROVEMENTS
HLB Project #: 12141
Project ID 04-15000182

March 17th, 2015
Final Permit Set
265100-Lighting Fixtures, Lamps, Ballasts

Type: FX2

LIGHTING CONTROL CUT SHEET Note: This document is for information only. Refer to specifications for all catalog numbers, etc.

DocuSign Envelope ID: 330DEBD6-9A9E-4F34-BDCC-1AC1BAA701E9

electrix ILLUMINATION

MOUNTING OPTIONS:

Horizontal Mount

Vertical Mount

Swivel Mount

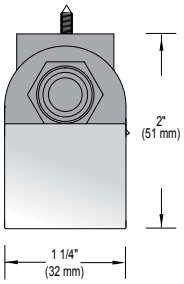

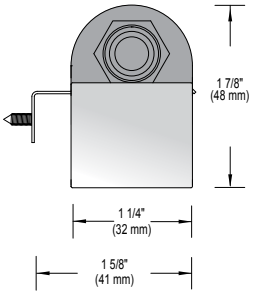

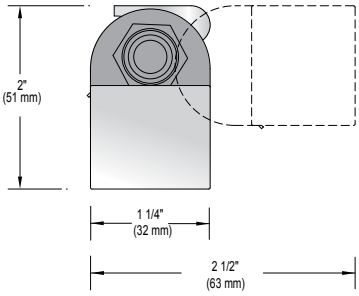

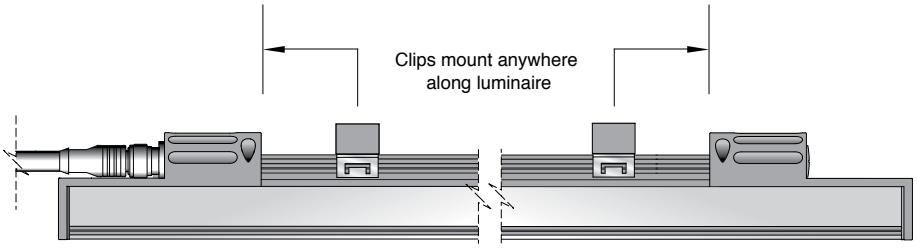

The L140W series is UL listed for wet locations. The fixture was designed for exterior down light applications with minimal space limits. The L140W is not submersible and should not be mounted in conditions where standing water will collect on the lens.

UL RoHS

© **ELECTRIX, INC.** 45 SPRING STREET NEW HAVEN, CT 06519 ☎ 203.776.5577 203.624.7545 info@electrix.com www.electrix.com

Project: IERBYS TEMPORARY IMPROVEMENTS
HLB Project #: 12141
Project ID 04-15000182

March 17th, 2015
Final Permit Set
265100-Lighting Fixtures, Lamps, Ballasts

Type: FX2

LIGHTING CONTROL CUT SHEET Note: This document is for information only. Refer to specifications for all catalog numbers, etc.

DocuSign Envelope ID: 330DEBD6-9A9E-4F34-BDCC-1AC1BAA701E9

electrix
ILLUMINATION

PRODUCT INFORMATION:

L140W
PRODUCT

POWER
05 - 5 watts per linear ft
10 - 10 watts per linear ft

LENGTH
20 - 20 3/4" actual
30 - 30 3/4" actual
40 - 40 3/4" actual
50 - 50 3/4" actual

LED COLOR
W3 - 3000K White
W4 - 4000K White

OPTIC
05 - 5 degree
60M - 60 degree lens with micro glare control louver
60C - 60 degree Clear Lens
90F - 90 degree lens with satine diffuser (92% Transm.)

MOUNT
HW - Horizontal Mount Wet
V - Vertical Mount
S - Swivel

POWER CABLE ACCESSORIES:

LEADER FEED CABLE:

LFC-S32: 32 ft. primary feed cable with straight connector. One required per LED feed.

LEADER FEED CABLE:

LFC-A32: 32 ft. primary feed cable with right angle connector.

UL RoHS

© **ELECTRIX, INC.** 45 SPRING STREET NEW HAVEN, CT 06519 ☎ 203.776.5577 203.624.7545 info@electrix.com www.electrix.com

Project: IERBYS TEMPORARY IMPROVEMENTS
HLB Project #: 12141
Project ID 04-15000182

March 17th, 2015
Final Permit Set
265100-Lighting Fixtures, Lamps, Ballasts

Type: FX2

LIGHTING CONTROL CUT SHEET Note: This document is for information only. Refer to specifications for all catalog numbers, etc.

DocuSign Envelope ID: 330DEBD6-9A9E-4F34-BDCC-1AC1BAA701E9

electrix ILLUMINATION

LED POWER SUPPLIES - WET LOCATION

96W MAX POWER SUPPLY

- wattage output: 1W (min) to 96W (max)
- input voltage: 120V-277V AC output voltage: 24V DC
- maximum remote driver distance is 32'. **
- dimming driver requires a 0-10V control interface (by others)[1]
- IP65 rating

MODEL: PS96-W

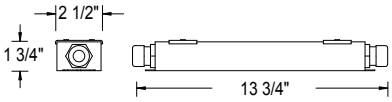

MODEL: PS96D-W dimmable

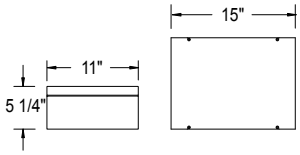

288W MAX POWER SUPPLY

- wattage output: three (3) 96W channels
- input voltage: 120V–277V AC output voltage: 24V DC
- maximum remote driver distance is 32'. **
- dimming driver requires a 0-10V control interface (by others)[1]
- IP65 rating

MODEL: PS288-W

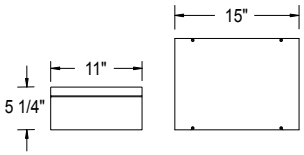

MODEL: PS288D-W dimmable

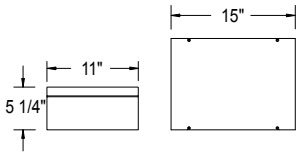

** The remote mounting distance may be exceeded. However, precaution for site condition of electromagnetic interference (EMI) and voltage drop must be considered.

[1] Contact the factory for dimming wire diagram

UL RoHS

© ELECTRIX, INC. 45 SPRING STREET NEW HAVEN, CT 06519 ☎ 203.776.5577 203.624.7545 info@electrix.com www.electrix.com

Project: IERBYS TEMPORARY IMPROVEMENTS
HLB Project #: 12141
Project ID 04-15000182

March 17th, 2015
Final Permit Set
265100-Lighting Fixtures, Lamps, Ballasts

Type: FX2

LIGHTING CONTROL CUT SHEET Note: This document is for information only. Refer to specifications for all catalog numbers, etc.

DocuSign Envelope ID: 330DEBD6-9A9E-4F34-BDCC-1AC1BAA701E9

BOCA FLASHER

HPNLS-Lo

Line Voltage Linear LED Strip Fixture

Dimmable monochromatic line voltage fixture fabricated with a variety of options.

The Boca HPNLS-Lo is a small profile fixture well suited for many lighting situations where both space and locating transformers are concerns. This line voltage version* eliminates the need for secondary transformers, making installation contractor friendly. Boca's patented Clean Dim* technology ensures even dimming from 0-100%. The HPNLS-Lo can be fabricated with a range of optics and color temperature choices, affording a multitude of distribution and effect options. The housing is anodized aluminum with a durable finish making it weather and abrasion resistant. It is UL Listed for dry, damp or wet location (model dependent).

* Patent Pending

PROJECT:_____

TYPE:_____

Technical Specifications

Wattage ..... 6 watts or 10 watts or 13 watts per linear foot (model dependent)
Input Voltage ..... 90-120VAC or 230-277VAC
Input Current ..... Model dependent
Control ..... Standard Line Voltage Forward or Reverse Phase Dimming
Power Cable Length ..... UL Standard 6ft
LED Spacing, per strip ..... 2", o.c. (for Lo6), 1.5" o.c. (for Lo8)
Fixture Length ..... 6" increments, (12" minimum)
.....allow 1/4" for each end cap and 1" for power feed cable
Fixture Width ..... 1.68"
Total Height (not including clip) ..... 1.68"
Mounting ..... Fixed or Swivel
Color Options ..... 2700K, 3000K, 3500K, 4000K, 5000K, amber, red, green, blue
Optics available ..... 10°, 24°, 36°, 13°x38°, 120°
Color Rendering Index (CRI) ..... CRI Greater than 90
Exterior Wet Listing Options IP65, IP68

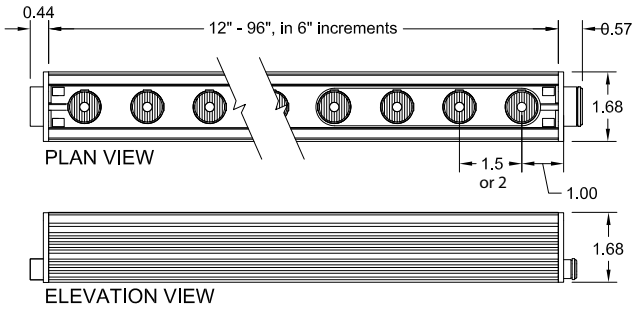

*Fixture is shown with Male/Female rigid connection.
(This is Option 1 on the connections page.)

Key Features

- Compact, variable light fixture for dry, damp or wet location use
- Fixture comes in 6" increments (12" minimum)
- Many options in optics, color temperature, and accessories to suit a range of projects - call factory for additional options
- Three different types of lens
- EMI Filter integral
- Uses standard line voltage dimmers
- Fixtures are compatible with both forward and reverse phase dimming
- Clear aluminum or black finish - check factory for availability
- Contact Boca Flasher for tips on custom installations

Mounting Options

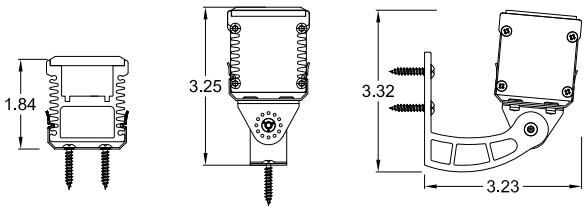

Fixed Spring Clip Bracket

Swivel Accessory with Spring Clip Bracket

Right Angle Arc Bracket with Swivel Accessory

Project Specification

HPNLS	—	—	—	—	—	—	—	—	—
	Wattage: Lo6 = 6 LEDs (6* or 10 watts a lin. ft) Lo8 = 8 LEDs (13 watts a lin. ft) *for 6 watts write Mod6W in Options.	Color Option: 2700K, 3000K, 3500K, 4000K, 5000K, amber, red, green, blue	Optic: 10°, 24°, 36°, 13°x38°, 120°	Voltage: 90-120VAC = 120V 230-277VAC = 277V	Finish: Anodized Aluminum= A Black= B	Location: Interior = I Exterior (IP65) = E Wet (IP68) = W	Mounting: Fixed = F Swivel = S Arc Swivel = Arc		Options: Hexcell louver= HL Diffused Lens= D Satin Ice White = SI See 2nd page for more options.

We are constantly improving our fixtures and reserve the right to change options and specifications. Additional information & details at www.bocaflasher.com.
For specific requirements, contact your Boca sales representative.

Boca Flasher, Inc. 552 NW 77th Street Boca Raton, Florida 33487 USA Phone: 561.989.5338 Fax: 561.982.8323

2012 Boca Flasher, Inc. All rights reserved. All names and trademarks are property of their respective owners REV 101912

Project: IERBYS TEMPORARY IMPROVEMENTS
HLB Project #: 12141
Project ID 04-15000182

March 17th, 2015
Final Permit Set
265100-Lighting Fixtures, Lamps, Ballasts

Type: FX3

LIGHTING CONTROL CUT SHEET Note: This document is for information only. Refer to specifications for all catalog numbers, etc.

DocuSign Envelope ID: 330DEBD6-9A9E-4F34-BDCC-1AC1BAA701E9

BOCA FLASHER

HPNLS-Lo

PROJECT:_____

TYPE:_____

Additional Options

Hexcell Louver

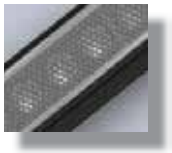

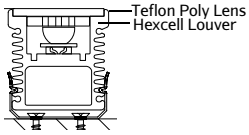

Key Features:

- Economical solution to off axis glare issues
- Louver is located flush to secondary optic, preventing unwanted striation
- Louver can not be utilized when no optic (120°) is specified
- Louver is behind lens to ensure no damage is done during installation or after
- Louver ships pre-fitted making on site fixture installation easy
- No unsightly clips, screws, or brackets
- Can be used with other baffles
- Adds nothing to overall height.
- Additional charges apply - consult your local rep for more information.
- **To specify add "HL" in options box**

Square Baffle

SB

SSB

SKB

Key Features:

- Design cuts off light at 90 degree
- Baffles are lightweight black PVC with non-reflective surfaces to avoid glare from interior sections
- One piece baffle clips onto the extruded housing making installation and removal easy
- Minimal profile size increases - consult factory for more information.
- Only adds 1/2" or 3/4" to overall height
- Additional charges apply - consult your local rep for more information.
- **To specify add "SB" in options box or "SSB" for slanted version or "SKB" for kicker version**

Satin Ice Lens

Diffused

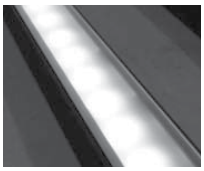

Key Features:

- For use when more diffusion than our clear lens is needed
- Lens is 1/8" (.09) thick and adds 1/16" to overall height of fixture. Thicker lens available. Call factory for more information
- 87% transmission
- Additional charges apply - consult your local rep for more information.
- **To specify add "D" in options box**

White

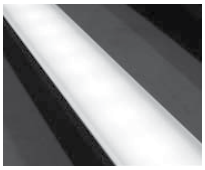

Key Features:

- For use when more diffusion than our Satin Ice Frost lens is needed
- Best for direct view use.
- Lens is 1/4" (.24) thick and adds 1/8" to overall height of fixture. Thinner lens available. Call factory for more information
- 42% transmission
- Additional charges apply - consult your local rep for more information.
- **To specify add "SI" in options box**

Luminaire Information

FIXTURE TYPE: Lo8, 3500°K, 24°degree optic, 12 inch

Candela Distribution

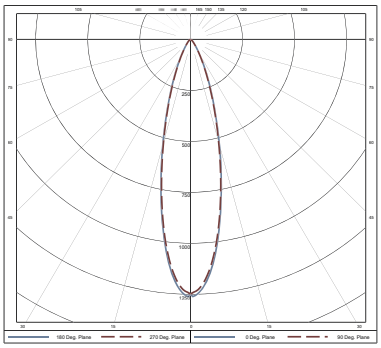

Center Beam Foot Candle & Illumination information

Distance	FtCandles
2 ft	312.5
3 ft	138.9
4 ft	78.1
5 ft	50.0
6 ft	34.7
7 ft	25.5
8 ft	19.5
9 ft	15.4
10 ft	12.5
12 ft	8.7

- Total Lumen Output:
  372.2 Lumens per foot
- Luminaire Efficacy:
  39.3 Lumens per Watt

*For lux multiply footcandles by 10.76
*Foot candle reading taken at 100% capacity

We are constantly improving our fixtures and reserve the right to change options and specifications. Additional information & details at www.bocaflasher.com.
For specific requirements, contact your Boca sales representative.

Boca Flasher, Inc. 552 NW 77th Street Boca Raton, Florida 33487 USA Phone: 561.989.5338 Fax: 561.982.8323

© 2012 Boca Flasher, Inc. All rights reserved. All names and trademarks are property of their respective owners

Project: IERBYS TEMPORARY IMPROVEMENTS
HLB Project #: 12141
Project ID 04-15000182

March 17th, 2015
Final Permit Set
265100-Lighting Fixtures, Lamps, Ballasts

Type: FX3

LIGHTING CONTROL CUT SHEET Note: This document is for information only. Refer to specifications for all catalog numbers, etc.

DocuSign Envelope ID: 330DEBD6-9A9E-4F34-BDCC-1AC1BAA701E9

BOCA FLASHER

Ratings: IP68

HPNLS-HO

Testing done by: CASCADE TEK
Tests done: Dust and Immersion
Test Specs: Test 1 - CEI/IEC 60529: 2001, (IP-6X)
Test 2 - CEI/IEC 60529: 2001, (IP-X8)
Certification: IP68

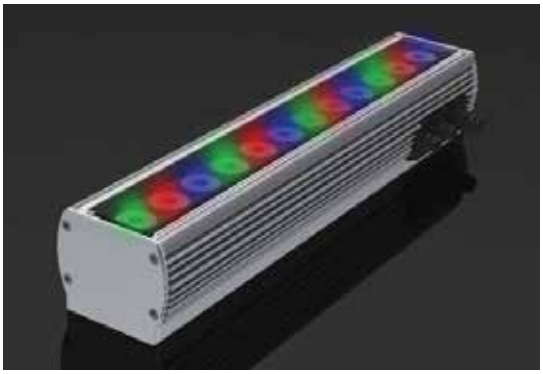

HPCCS

Testing done by: CASCADE TEK
Tests done: Dust and Immersion
Test Specs: Test 1 - CEI/IEC 60529: 2001, (IP-6X)
Test 2 - CEI/IEC 60529: 2001, (IP-X8)
Certification: IP68

HPFB

Testing done by: CASCADE TEK
Tests done: Dust and Immersion
Test Specs: Test 1 - CEI/IEC 60529: 2001, (IP-6X)
Test 2 - CEI/IEC 60529: 2001, (IP-X8)
Certification: IP68

SBL-Mix & SBL-MC

Testing done by: CASCADE TEK
Tests done: Dust and Immersion
Test Specs: Test 1 - CEI/IEC 60529: 2001, (IP-6X)
Test 2 - CEI/IEC 60529: 2001, (IP-X8)
Certification: IP68

Boca Flasher, Inc., 552 NW 77th Street, Boca Raton, Florida 33487, USA, Phone: 561 989 5338, Fax: 561 982 8323

DocuSign Envelope ID: 330DEBD6-9A9E-4F34-BDCC-1AC1BAA701E9

CASCADE TEK

Cascade Technical Sciences, Inc.

TEST DATA FORM DS10

DATE STARTED 3-14-2011	CUSTOMER Boca Flasher	TECHNICIAN SIGNATURE
DATE COMPLETED 3-14-2011	SPECIMEN DESCRIPTION Led Strip Fixture	ENGINEER (SIGNATURE)
TEMPERATURE (LABORATORY) +76°F	TYPE OF TEST Immersion (Re-Test)	ENGINEER Joe Fratello
HUMIDITY (LABORATORY) 31%	TEST SPECIFICATION / PARAGRAPH NUMBER CEI/IEC 60529: 2001, (IP-X8) 14.2.8	JOB NUMBER 1072
SPECIMEN NUMBERS (P/N - S/N) P/N- HPNLS S/N- 1 Sample		

PHOTO - Yes

DATE/TIME	REMARKS	TECH
3-14-11	**TEST SUMMARY:** Expose each sample to immersion in 1.01 meters of water for a period of 6 hours. Upon completion remove samples and perform post exposure visual for water ingress. Water & sample temperature shall not differ by more than 5K.	TA
0858	Begin set up of sample for immersion in 1.01 meter of water.	TA
0927	Set up is complete and begin exposure of sample in 1.01 meter of water for 6 hours. Sample temperature at +21°c & water currently at +19.9°c. Sample non-operating during exposure with pre-exposure weight of 1991.0 grams.	TA
1528	6 hour immersion is complete and remove sample and perform post exposure inspection.	TA
1558	No visible water ingress noted. Return sample to customer for further evaluation.	TA
	- Test Complete -	

Test Data Form DS10-10/04

DocuSign Envelope ID: 330DEBD6-9A9E-4F34-BDCC-1AC1BAA701E9

CASCADE TEK

Cascade Technical Sciences, Inc.

TEST DATA FORM DS10

DATE STARTED 2-28-2011	CUSTOMER Boca Flasher	TECHNICIAN SIGNATURE
DATE COMPLETED 3-2-2011	SPECIMEN DESCRIPTION Led Strip Fixture (3) & RGB Brick Light (1)	ENGINEER (SIGNATURE)
TEMPERATURE (LABORATORY) +70°F	TYPE OF TEST Dust	ENGINEER Joe Fratello
HUMIDITY (LABORATORY) 31%	TEST SPECIFICATION / PARAGRAPH NUMBER CEI/IEC 60529: 2001, (IP-6X) Cat. 1 13.4	JOB NUMBER 1072
SPECIMEN NUMBERS (P/N - S/N) (Run #1)P/N- SBL S/N- 1 Sample & P/N- HPNLS S/N- 1 Sample (Run #2)P/N- HPCCS S/N- 1 Sample & P/N- HPFB S/N- 1 Sample		

PHOTO - Yes

DATE/TIME	REMARKS	TECH
2-28-11	**TEST SUMMARY:** Expose sample to 8 hours of dust exposure with sample under vacuum (2 kPa max.) pressure per specification. Upon completion of exposure perform visual inspection for dust ingress. Due to sample size and quantity, two runs will be performed.	TA
1045	Begin set up of samples (run #1) and chamber for dust exposure.	TA
1332	Set up complete with samples under a vacuum per specification. Begin exposure of 8 hours of settling dust at ambient temperature and samples non-operating.	TA
1605	Continue dust exposure with samples under a vacuum & chamber operating o.k. Chamber and vacuum to run until 8 hours is complete then power down.	TA
3-1-11		
0800	Exposure complete and remove samples from chamber and take post exposure photos.	TA
0845	No visible dust intrusion noted. Samples to remain on-site for further testing.	TA
1230	Begin set up of run #2 samples for exposure,	TA
1400	Set up complete with samples under a vacuum per specification. Begin exposure of 8 hours of settling dust at ambient temperature and samples non-operating.	TA
1604	Continue dust exposure with samples under a vacuum & chamber operating o.k. Chamber and vacuum to run until 8 hours is complete then power down.	TA
3-2-11		
0741	Exposure complete and remove samples from chamber and take post exposure photos.	TA
0814	No visible dust intrusion noted. Samples to remain on-site for further testing.	TA
	- Test Complete -	

Test Data Form DS10-10/04

DocuSign Envelope ID: 330DEBD6-9A9E-4F34-BDCC-1AC1BAA701E9

KIM LIGHTING

ALT60

ALTITUDE™ LED

8/19/14 • kl_alt60_spec.pdf

Type:
Job:
Catalog number:

Approvals:

Mtg. Fixture Electrical Module Finish Options
See page 2 — See pages 3-5

Ordering Example: 1SA/ALT3P35/60L5K277/WH/A26
Select pole from Kim's Arms and Poles Selection Guide. If pole is provided by others indicate O.D. for arm fitting.

Date:
Page: 1 of 6

Specifications

ALT60
Approx. Wt. = 27 lbs.

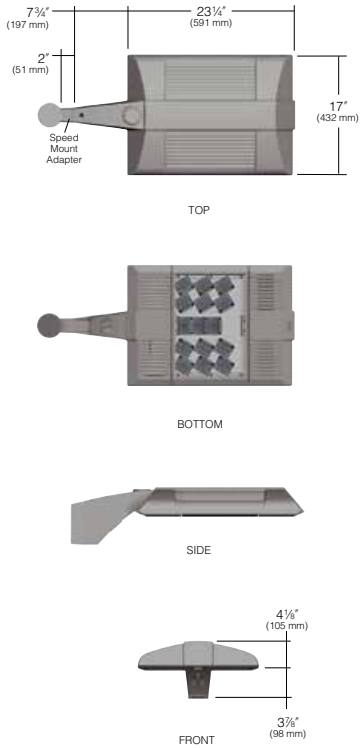

Housing: One piece, low copper, aluminum extrusion is mechanically secured with stainless steel fasteners to low copper aluminum die-cast electrical compartment and end cap. The electrical compartment includes an integral support arm for mounting directly to a surface mount pole adaptor or a horizontal slipfitter. A solid barrier wall separates the optical and electrical compartment for thermal control. Electrical compartment and end cap covers are securely fastened with with two hinges and a single latch at each cover. One piece silicone gaskets seal the compartments at the barrier surface.

Optical Module: The high performance optic utilizes the IP66 rated PicoPrism™ technology securely attached to internal heat sink modules producing incredible uniformity and visual comfort. This PicoPrism optic utilizes a canted prism lens aimed toward the task and spreads horizontally to produce high lumen output as well as great uniformity. All the optical modules are fastened to the body of the luminaire across the center as well as around the perimeter.

Electrical Compartment: Available in voltages from 120V through 480V @ 50/60Hz.Class 2 output with power factor >0.9 at full load in accordance with the National Electrical Code, ANSI/NFPA 70. Integral 10kV surge suppression protection standard. To address inrush current, slow blow fuse or type C/D breaker should be used. All electronic components are UL and CSA recognized and mounted directly to a driver tray for maximum heat dissipation and modularity. Module includes a driver, LifeShield® temperature control device and surge protector. Driver is rated for -40°C starting and has a 0-10V dimming interface for multi-level illumination options. All electronic components are IP66 rated. 347V and 480V currents may have a step-down transformer.

Support Arm: Die-cast, low copper aluminum with splice access cover and tool-less entry. A die-cast pole adaptor and an internal reinforcing plate are provided with wire strain relief. The arm adaptor is square or circular cut for specified pole size and shape. For field wire connections, a terminal block is mounted in the arm cavity and accessible behind the splice access cover. The block accepts #14 to #8 wire sizes and is factory prewired to the electrical module quick-disconnect plug inside the electrical compartment.

Optional Horizontal Slip-fitter: Cast low copper aluminum with stamped, splice access cover. A die-cast adaptor plate is provided to secure the luminaire to 1-1/4″ to 2″ IPS pipe size arms. For field wire connections, a terminal block is mounted in the arm cavity and accessible behind the splice access cover. Accepts #14 to #8 wire sizes and is factory prewired to electrical module quick-disconnect plug inside the electrical compartment.

Optional Wall Mount: The Altitude easily mounts to the wall. A cast aluminum mounting plate is attached to the wall over the junction box. Bolt the Speed Mount to the cover plate. Then install the assembly over the mounting plate. Slide the luminaire into place for hands free wiring and finishing.

Finish: Each luminaire receives a fade and abrasion resistant, electrostatically applied, thermally cured, triglycidal isocyanurate (TGIC) polyester powdercoat finish. Standard colors include (BL) Black, (DB) Dark Bronze, (WH) White, (PS) Platinum Silver, (SG) Stealth Gray, (LG) Light Gray, and (CC) Custom Color (Include RAL#).

Listed to: UL 1598 Standard for Luminaires - UL 8750 Standard for Safety for Light Emitting Diode (LED) Equipment for use in Lighting Products and CSA C22.2#250.0 Luminaires. RoHS compliant. Meets Buy American provisions within ARRA.

CAUTION: Fixtures must be grounded in accordance with national, state and/or local electrical codes, Failure to do so may result in serious personal injury.

HUBBELL LIGHTING, INC.

US Patent Numbers D674,950 S and D674,965 S.
Other Patents Pending.

KIM LIGHTING RESERVES THE RIGHT TO CHANGE SPECIFICATIONS WITHOUT NOTICE.

© 2014 KIM LIGHTING • 16555 EAST GALE AVENUE, CITY OF INDUSTRY, CA 91745-1788 • TEL: 626/968-5666 • FAX: 626/968-5716

Project: IERBYS TEMPORARY IMPROVEMENTS
HLB Project #: 12141
Project ID 04-15000182

March 17th, 2015
Final Permit Set
265100-Lighting Fixtures, Lamps, Ballasts

Type: FX4/5

LIGHTING CONTROL CUT SHEET Note: This document is for information only. Refer to specifications for all catalog numbers, etc.

DocuSign Envelope ID: 330DEBD6-9A9E-4F34-BDCC-1AC1BAA701E9

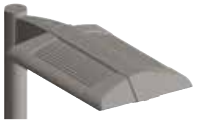

Mounting

3SY configuration is available for round poles only.

Cat. No.:	☐ **1SA**	☐ **2SB**	☐ **2SL**	☐ **3ST**	☐ **3SY**	☐ **4SC**	☐ **1SW**
EPA (Effective Projected Area)							
ALT60	0.58	1.17	0.91	1.50	1.50	1.66	n/a

Fixture

Cat. No. designates fixture and light distribution.

ALT x P x

Housing:
ALT= Altitude

Optic:
P = PicoPrism™

Distribution:

- ☐ 1 = Type I
- ☐ 2 = Type II
- ☐ 3 = Type III
- ☐ 4 = Type IV
- ☐ 5 = Type V
- ☐ R = Type R Right
- ☐ L = Type L Left

Current:

- ☐ 35 = 350 mA
- ☐ 70 = 700 mA

Light Distribution:

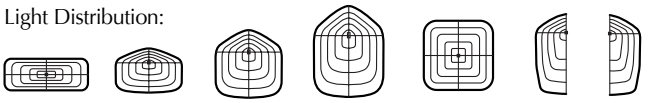

TYPE I | TYPE II | TYPE III | TYPE IV Forward Throw | TYPE V Square | TYPE R Right | TYPE L Left

Electrical Module

x x x

Source:

- ☐ 60L = 17"W x 23½"L

Color Temperature:[1]

- ☐ 2K = 580nm Amber[2]
- ☐ 3K = 3000K
- ☐ 4K = 4000K
- ☐ 5K = 5000K

Voltage:

- ☐ 120 = 120V
- ☐ 208 = 208V
- ☐ 240 = 240V
- ☐ 277 = 277V
- ☐ 347 = 347V
- ☐ 480 = 480V

[1] For custom optics and color temperature configurations, contact factory.
[2] Turtle Friendly.

0-10V Dimming Interface

0-10v Dimming Interface - Driver has 0-10v dimming interface with a range of 10-100%. Is capable with most control systems. Note: Not compatible with current sourcing dimmers. Controls compatible via Gray and Purple dimming leads. Always consult with control company for compatibility.

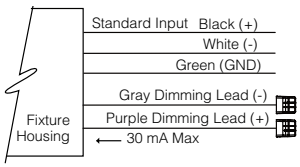

© 2014 KIM LIGHTING • 16555 EAST GALE AVENUE, CITY OF INDUSTRY, CA 91745-1788 • TEL: 626/968-5666 • FAX: 626/968-5716

DocuSign Envelope ID: 330DEBD6-9A9E-4F34-BDCC-1AC1BAA701E9

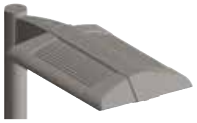

Optional Features

Finish
TGIC powder coat.

Color:	Black	Dark Bronze	Stealth Gray	Platinum Silver	White	Custom Color[1]
Cat. No.:	☐ **BL**	☐ **DB**	☐ **SG**	☐ **PS**	☐ **WH**	☐ **CC**

[1]Custom colors subject to additional charges, minimum quantities and extended lead times. Consult representative. Custom color description:_____

Wall Mounting
Cat. No. **1SW**
Select from Mounting on page **2**.

The Altitude™ easily mounts to the wall. A cast aluminum wall bracket is attached to the wall over the junction box. Bolt the Speed Mount to the cover plate. Then install the assembly over the wall mount bracket. Side the luminaire into place for hands free wiring and finishing.

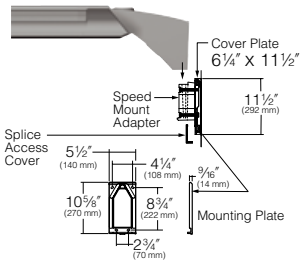

Fusing (internal only):
Cat. No. **(see chart at right)**
☐ **No Option**

High temperature fuse holders factory installed inside the fixture housing. Fuse is included.

Cat. No.: ☐ **SF** for 120, 277 and 347 Line Volts
☐ **DF** for 208, 240 and 480 Line Volts

Lenses
Cat. No. ☐ **FGL** (Glass)
☐ **FPL** (Polycarbonate)
☐ **No Option**

One-piece flat glass or polycarbonate lens slips into reveal. Extra silicone gasketing will be provided to retain a clear optical compartment. (Only available for 350mA systems).

CAUTION: Use only when vandalism is anticipated to be high.

Neighbor Friendly Optic:
Cat. No. ☐ **NFO**
☐ **No Option**

Integrated Neighbor Friendly Optic on each PicoPrism™ module to completely control unwanted backlight. Most effective with Type III and IV distibutions.

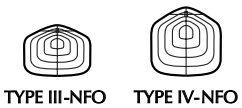

Warranty

Kim Lighting warrants Altitude™ products ("Product(s)") sold by Kim Lighting to be free from defects in material and workmanship for (i) a period of five (5) years for metal parts, (ii) a period of ten (10) years for exterior housing paint finish(s), (iii) a period of six (6) years for LED Light Engines (PicoPrisms™ and, (iv) a period of five (5) years for LED power components (LED Driver, LifeShield® device), from the date of sale of such goods to the buyer as specified in Kim Lighting shipment documents for each product. Occupancy sensors, Surge Protector, dimmersand relay wiring components are covered by the manufacturer's warranty.

© 2014 KIM LIGHTING • 16555 EAST GALE AVENUE, CITY OF INDUSTRY, CA 91745-1788 • TEL: 626/968-5666 • FAX: 626/968-5716

DocuSign Envelope ID: 330DEBD6-9A9E-4F34-BDCC-1AC1BAA701E9

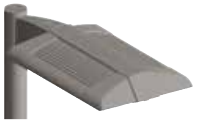

Optional Features

Horizontal Slipfitter Mount
Cat. No. ☐ **HSF**
☐ **No Option**

Replaces standard mounting arm with a cast aluminum fitter to adapt to a horizontal 1¼″ to 2″ pipe-size mounting end (1⅝″ to 2⅜″ OD). The casting has a +/- 5° adjustment to accommodate davit arms that are not horizontal.

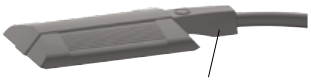

Horizontal Slipfitter for 1¼″ to 2″ Pipe-Size Mount

Vertical Slipfitter Mounts
Cat. No. includes Mounting
Cat. No. **(See right)**
☐ **No Option**

Allows fixture or fixtures with standard mounting arm to mount to a pole with a 2″ pipe-size tenon (2⅜″ OD). Minimum 4″ tenon length required.

Specify configuration (1SA, 2SB, 2SL, 3ST, 3SY, 4SC) 4″ round or square aluminum with flush cap. Finish to match fixture and arm.

NOTE: 3Y only available on round slipfitter.

Cat. No.
☐ **VSF-1SA**
☐ **VSF-2SB**
☐ **VSF-2SL**
☐ **VSF-3ST**
☐ **VSF-3SY**
☐ **VSF-4SC**

Round

Cat. No.
☐ **SVSF-1SA**
☐ **SVSF-2SB**
☐ **SVSF-2SL**
☐ **SVSF-3ST**

☐ **SVSF-4SC**

Square

Mounting Configuration
1SA - single arm mount
2SB - 2 at 180°
2SL - 2 at 90°
3ST - 3 at 90°
3SY - 3 at 120°
4SC - 4 at 90°

Photocell Receptacle
Cat. No. ☐ **A26**
☐ **No Option**

Fixture supplied with a fully gasketed rotatable receptacle above the electrical compartment for NEMA twist-lock base photocell (By-Others). For multiple fixture pole mountings, one fixture has the receptacle to operate the others.

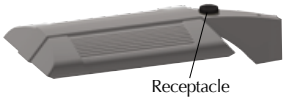

Receptacle

Time Clock Relay
Cat. No. ☐ **TCR**
☐ **No Option**

Time Clock Relay - An intrgral relay and dimming circuit is provided at the voltage of the luminaire for contact from a time clock by-others. The Time Clock tells the relay to switch to 50% dim.

Occupancy Sensor up to 16'
Cat. No. ☐ **SCL**
☐ **No Option**

Occupancy Sensor up to 16′ - Outdoor occupancy sensor with 0-10v interface dimming control mounts directly to the underside of the luminaire. Wide 360° pattern. Module colors available Black, Gray, and White.

Occupancy Sensor up to 30'
Cat. No. ☐ **SCH**
☐ **No Option**

Occupancy Sensor up to 30′ - Outdoor occupancy sensor with 0-10v interface dimming control mounts directly to the underside of the luminaire. Wide 360° pattern. Module colors available Black, Gray, and White.

© 2014 KIM LIGHTING • 16555 EAST GALE AVENUE, CITY OF INDUSTRY, CA 91745-1788 • TEL: 626/968-5666 • FAX: 626/968-5716

DocuSign Envelope ID: 330DEBD6-9A9E-4F34-BDCC-1AC1BAA701E9

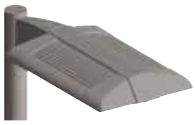

Optional Features

Round Pole-Mounted Occupancy Sensor up to 16' Cat. No. ☐ **SCL-R** ☐ **No Option**	Round Pole Mounted Occupancy Sensor up to 16′ - Outdoor occupancy sensor with 0-10v interface dimming control mounts directly to the underside of the luminaire. Wide 360° pattern. Module colors available Black, Gray, and White. Module is cut for round pole mounting. Pole diameter needed. **Ordering Example: SCL-R4*/277**/BL***** *Pole Diameter, ** Voltage, *** Color
Square Pole-Mounted Occupancy Sensor up to 16' Cat. No. ☐ **SCL-S** ☐ **No Option**	Square Pole Mounted Occupancy Sensor up to 16′ - Outdoor occupancy sensor with 0-10v interface dimming control mounts directly to the underside of the luminaire. Wide 360° pattern. Module colors available Black, Gray, and White. Module is cut for round pole mounting. Pole diameter needed. **Ordering Example: SCL-L/277**/BL***** ** Voltage, *** Color
Round Pole-Mounted Occupancy Sensor up to 30' Cat. No. ☐ **SCH-R** ☐ **No Option**	Round Pole Mounted Occupancy Sensor up to 30′ - Outdoor occupancy sensor with 0-10v interface dimming control mounts directly to the underside of the luminaire. Wide 360° pattern. Module colors available Black, Gray, and White. Module is cut for round pole mounting. Pole diameter needed. **Ordering Example: SCH-R4*/277**/BL***** *Pole Diameter, ** Voltage, *** Color
Square Pole-Mounted Occupancy Sensor up to 30' Cat. No. ☐ **SCH-S** ☐ **No Option**	Square Pole Mounted Occupancy Sensor up to 30′ - Outdoor occupancy sensor with 0-10v interface dimming control mounts directly to the underside of the luminaire. Wide 360° pattern. Module colors available Black, Gray, and White. Module is cut for square pole mounting. **Ordering Example: SCH-S/277**/BL***** ** Voltage, *** Color
Wireless Control Cat. No. ☐ **WIH-M** ☐ **No Option**	In fixture WiHubb® wireless control module features on/off/variable and step dimming, SNAP protocol mesh network, AES-128 encryption detection, occupancy sensor interface and intuitive, user-friendly software. The most comprehensive and up to date information can be found at http://www.hubbell-automation.com/products/wihubb_infixture_module/.
Wireless Control Cat. No. ☐ **WSI-M** ☐ **No Option**	Hubbell Building Automation's wiSCAPE™ Fixture Module is a bidirectional wireless RF device that allows an individual fixture to be managed, monitored and metered. The wiSCAPE Fixture Modules communicates wirelessly over a robust 2.4GHz ISM (Industrial, Scientific and Medical) certified meshed radio signal. The wiSCAPE Fixture Module drastically simplifies control and automation of projects, especially in retrofit environments and challenges the legacy world of wired-systems. wiSCAPE wireless control technology adapts easily to complex automation situations for quick, simple and economical commissioning.

Additional information on controls can be found at http://www.hubbelllighting.com/solutions/controls/

© 2014 KIM LIGHTING • 16555 EAST GALE AVENUE, CITY OF INDUSTRY, CA 91745-1788 • TEL: 626/968-5666 • FAX: 626/968-5716

DocuSign Envelope ID: 330DEBD6-9A9E-4F34-BDCC-1AC1BAA701E9

KIM LIGHTING

ALT60

ALTITUDE™ LED

8/19/14 • kl_alt60_spec.pdf

Type:

Job:

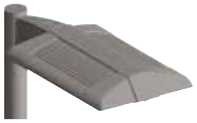

Spectroradiometric			
	3000K Average	4200K Average	5100K Average
Correlated Color Temp. CCT (K)	2800K-3175K	3800K-4600K	4600K-5600K
Color Rendering Index (CRI)	≥75	≥70	≥65
Power Factor	>.90	>.90	>.90

Projected Lumen Maintenance		
mA	50,000 hrs	100,000 hrs
350	N/A	N/A
700	93.62%	89.99%

Electrical - Drive Current @350mA		
Volts - AC	Amps - AC	System Watts
120	0.58	70
208	0.34	70
240	0.29	70
277	0.25	70
347	0.20	70
480	0.15	70

Electrical - Drive Current @700mA		
Volts - AC	Amps - AC	System Watts
120	1.18	141
208	0.68	141
240	0.59	141
277	0.51	141
347	0.41	141
480	0.29	141

Current - 350mA

B.U.G. Rating (TM15) in Lumens where B = Backlight, U = Uplight, G = Glare

Temperature	TYPE 1	TYPE 2	TYPE 3	TYPE 3 NFO	TYPE 4	TYPE 4 NFO	TYPE 5	TYPE L/R
3000K	N/A	B3 U0 G3	B2 U0 G2	B1 U0 G2	B0 U0 G2	B0 U0 G2	B2 U0 G2	B2 U0 G2
4200K	N/A	B3 U0 G3	B2 U0 G2	B1 U0 G2	B1 U0 G2	B0 U0 G2	B3 U0 G2	B2 U0 G2
5100K	N/A	B3 U0 G3	B2 U0 G2	B1 U0 G2	B1 U0 G2	B0 U0 G2	B3 U0 G2	B2 U0 G2

Absolute Lumens

Temperature	TYPE 1	TYPE 2	TYPE 3	TYPE 3 NFO	TYPE 4	TYPE 4 NFO	TYPE 5	TYPE L/R
3000K	N/A	5116	5188	4522	5015	4411	5392	5135
4200K	N/A	6519	6611	5762	6390	5621	6871	6543
5100K	N/A	7106	7206	6281	6965	6127	7489	7132

Current - 700mA

B.U.G. Rating (TM15) in Lumens where B = Backlight, U = Uplight, G = Glare

Temperature	TYPE 1	TYPE 2	TYPE 3	TYPE 3 NFO	TYPE 4	TYPE 4 NFO	TYPE 5	TYPE L/R
3000K	N/A	B3 U0 G3	B2 U0 G3	B2 U0 G3	B1 U0 G3	B0 U0 G2	B3 U0 G2	B3 U0 G3
4200K	N/A	B3 U0 G3	B2 U0 G3	B2 U0 G3	B1 U0 G3	B0 U0 G3	B4 U0 G2	B3 U0 G3
5100K	N/A	B3 U0 G3	B2 U0 G3	B2 U0 G3	B1 U0 G3	B0 U0 G3	B4 U0 G2	B3 U0 G3

Absolute Lumens

Temperature	TYPE 1	TYPE 2	TYPE 3	TYPE 3 NFO	TYPE 4	TYPE 4 NFO	TYPE 5	TYPE L/R
3000K	N/A	8911	8919	7824	8425	7485	9134	8670
4200K	N/A	10990	11162	9716	10724	9463	11618	11047
5100K	N/A	12378	12386	10866	11449	10396	12686	12041

LED performance and lumen output continues to improve at a rapid pace. Log onto www.kimlighting.com to download the most current photometric files from Kim Lighting's IES File Library. For custom optics and color temperature configurations, contact factory.

© 2014 KIM LIGHTING • 16555 EAST GALE AVENUE, CITY OF INDUSTRY, CA 91745-1788 • TEL: 626/968-5666 • FAX: 626/968-5716

Project: IERBYS TEMPORARY IMPROVEMENTS
HLB Project #: 12141
Project ID 04-15000182

March 17th, 2015
Final Permit Set
265100-Lighting Fixtures, Lamps, Ballasts

Type: FX4/5

LIGHTING CONTROL CUT SHEET Note: This document is for information only. Refer to specifications for all catalog numbers, etc.

DocuSign Envelope ID: 330DEBD6-9A9E-4F34-BDCC-1AC1BAA701E9

KIM LIGHTING

PRA

Round Aluminum Non-Tapered Pole

revision 11/12/14 • kl_pra_spec.pdf

Type:
Job:
Catalog number:

Pole	/ Mounting	/ Structural Luminiare Option	/ Finish	/ Optional Hinged Base	/ Optional Duplex Receptacle
See page 2		See page 3		See page 4	

Approvals:

Date:
Page: 1 of 5

Specifications

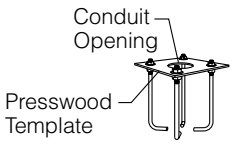

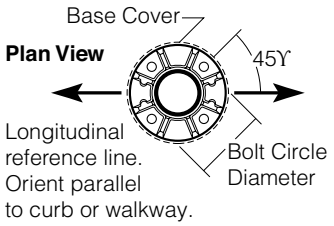

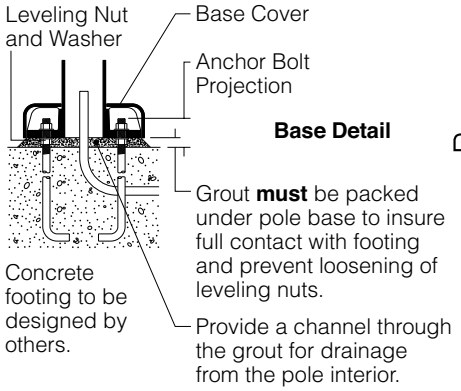

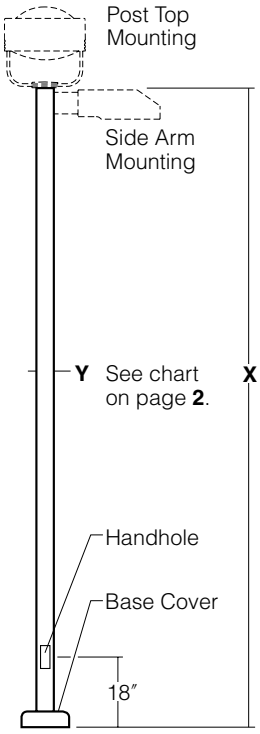

Pole Construction: Seamless round extruded aluminum tube of alloy 6063-T6, welded to top and bottom of aluminum base casting of alloy 356.

Base Cover: Base has a two-piece cast aluminum full cover of 319 alloy, secured by stainless steel screws.

Pole Cap: A flush-sided cast aluminum pole cap is provided for side arm mounted luminaires.

Handhole: 18" up from base, with a gasketed cover and ground lug. Poles with a 3⅜" O.D. include a handhole reinforcement casting welded in place.

Anchor Bolts: Four galvanized anchor bolts provided, complete with eight nuts, eight flat washers, and a presswood template.

Vibration Dampener: All poles 25' and above include an internally mounted, factory installed pendulum vibration dampener, with flush stainless steel socket head fasteners finished to match pole.

Strength: Poles will withstand wind loads as listed in chart (See page **2**) when luminaires are mounted per fixture installation instructions.

Finish: Super TGIC thermoset polyester powder coat paint applied over a titanated zirconium conversion coating. Standard colors are Black, Dark Bronze, Light Gray, Stealth Gray™, Platinum Silver, and White. Custom colors are available.

CAUTION: Installation of poles without luminaire(s) will compromise pole strength. Any accessories attached to pole, or other modifications will compromise pole strength and may result in pole failure.

Maintenance: A regularly scheduled maintenance program must be established to insure the protective paint coating is intact, corrosion or structural damage has not occurred, and anchor bolt nuts are tight. Failure to do so could lead to pole collapse and serious personal injury.

HUBBELL
HUBBELL LIGHTING, INC.

© 2014 KIM LIGHTING • 16555 EAST GALE AVENUE, CITY OF INDUSTRY, CA 91745-1788 • TEL: 626/968-5666 • FAX: 626/968-5716

Project: IERBYS TEMPORARY IMPROVEMENTS
HLB Project #: 12141
Project ID 04-15000182

March 17th, 2015
Final Permit Set
265100-Lighting Fixtures, Lamps, Ballasts

Type: FX4/5

LIGHTING CONTROL CUT SHEET Note: This document is for information only. Refer to specifications for all catalog numbers, etc.

DocuSign Envelope ID: 330DEBD6-9A9E-4F34-BDCC-1AC1BAA701E9

Standard Features

NOTE: All allowable pole and fixture EPAs are derived from the AASHTO standard. Responsibility lies with the specifier for correct pole selection based on local codes and standards for the job location. (See page **4**).

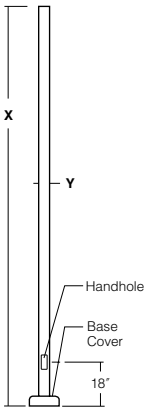

Pole – Pole Catalog Number	X	Y	85	90	100	110	120	130	140	150
										Wind Map Steady Wind ↓
☐ **PRA8-4125**	8'	4" x .125	13.06	11.49	10.46	8.39	6.81	5.65	4.80	4.13
☐ **PRA8-5125**	8'	5" x .125	21.29	18.79	17.15	14.05	11.72	9.92	8.49	7.34
☐ **PRA10-34125**	10'	3⅜" x .125	6.58	5.70	7.71	6.05	4.79	3.88	3.27	2.78
☐ **PRA10-4125**	10'	4" x .125	9.78	8.53	9.09	7.01	5.42	4.30	3.58	3.01
☐ **PRA10-5125**	10'	5" x .125	16.21	14.21	12.90	10.51	8.72	7.34	6.25	5.38
☐ **PRA12-34188**	12'	3⅜" x .188	8.76	7.62	6.86	5.35	4.20	3.30	2.59	2.03
☐ **PRA12-4125**	12'	4" x .125	7.48	6.44	5.75	4.37	3.32	2.59	2.14	1.78
☐ **PRA12-5125**	12'	5" x .125	12.67	11.00	9.91	8.01	6.60	5.51	4.66	3.99
☐ **PRA12-6188**	12'	6" x .188	32.89	29.22	27.04	22.20	18.53	15.69	13.44	11.64
☐ **PRA14-34188**	14'	3⅜" x .188	6.94	5.95	5.31	4.01	3.02	2.26	1.65	1.17
☐ **PRA14-4125**	14'	4" x .125	5.73	4.84	4.25	3.06	2.16	1.57	1.24	0.98
☐ **PRA14-4188**	14'	4" x .188	10.56	9.14	8.21	6.34	4.92	3.91	3.26	2.74
☐ **PRA14-5125**	14'	5" x .125	10.01	8.58	7.64	6.10	4.98	4.11	3.44	2.91
☐ **PRA14-5188**	14'	5" x .188	17.90	15.62	14.12	11.46	9.48	7.95	6.75	5.79
☐ **PRA14-6188**	14'	6" x .188	27.19	24.11	22.37	18.31	15.24	12.87	11.00	9.49
☐ **PRA16-4188**	16'	4" x .188	8.55	7.31	6.50	4.86	3.62	2.76	2.25	1.85
☐ **PRA16-5125**	16'	5" x .125	7.90	6.65	5.83	4.57	3.67	2.98	2.45	2.03
☐ **PRA16-5188**	16'	5" x .188	14.80	12.81	11.50	9.26	7.61	6.34	5.34	4.55
☐ **PRA16-6188**	16'	6" x .188	22.77	20.16	18.75	15.29	12.69	10.68	9.09	7.82
☐ **PRA20-4188**	19.5'	4" x .188	5.33	4.37	3.74	2.48	1.52	0.91	0.63	0.42
☐ **PRA20-5125**	19.5'	5" x .125	4.50	3.54	2.90	2.11	1.56	1.16	0.85	0.62
☐ **PRA20-5188**	19.5'	5" x .188	9.83	8.29	7.28	5.73	4.60	3.75	3.09	2.56
☐ **PRA20-6188**	19.5'	6" x .188	15.69	13.81	12.95	10.46	8.59	7.16	6.03	5.14
☐ **PRA25-6188**	25'	6" x .188	9.74	8.46	8.07	6.38	5.12	4.17	3.43	2.85
☐ **PRA30-6188**	30'	6" x .188	5.61	4.74	4.69	3.54	2.71	2.08	1.60	1.23
☐ **PRA30-6250**	30'	6" x .250	11.37	9.88	9.42	7.45	5.99	4.88	4.02	3.34

© 2014 KIM LIGHTING • 16555 EAST GALE AVENUE, CITY OF INDUSTRY, CA 91745-1788 • TEL: 626/968-5666 • FAX: 626/968-5716

DocuSign Envelope ID: 330DEBD6-9A9E-4F34-BDCC-1AC1BAA701E9

Standard Features

NOTE: All allowable pole and fixture EPAs are derived from the AASHTO standard. Responsibility lies with the specifier for correct pole selection based on local codes and standards for the job location. (See page **4**).

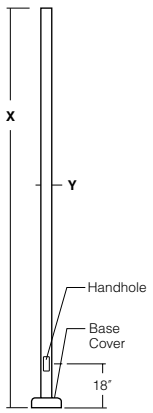

Anchor Base and Bolt Detail$

Pole Height	Pole Diameter	Bolt Circle Dia.	Anchor Bolt Projection	Anchor Bolts Size	Base Cover Size	Conduit Opening
8'-14'	4"-5"	8½"	3¼"	¾" x 15" + 3"	11⅞"	3" dia.
10'-14'	3⅜"	7"	3⅛"	¾" x 15" + 3"	10⅛"	2½" dia.
12'	6"	10½"	3⅜"	¾" x 30" + 3"	11⅞"	3" dia.
14'	6"	10½"	3¼"	¾" x 30" + 4"	11⅞"	3" dia.
16'-20'	4"-5"	8½"	3¼"	¾" x 30" + 4"	11⅞"	3" dia.
25'-30'	6"	10½"	3⅜"	¾" x 30" + 4"	14"	5" dia.

Mounting

Plan Views:

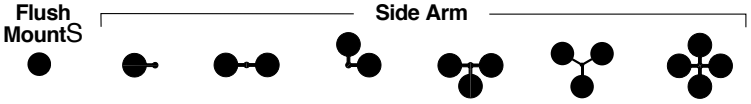

Mounting[1]: ☐ **FM** ☐ **A** ☐ **SA** ☐ **B** ☐ **SB** ☐ **L** ☐ **SL** ☐ **T** ☐ **ST** ☐ **Y** ☐ **SY** ☐ **C** ☐ **SC**

NOTE: Allowable Pole EPA for jobsite wind conditions must be equal to or greater than fixture mount EPA. Please refer to Kim luminaire catalog for specific fixture.
[1]See luminaire drilling requirements in luminaire catalog.

Structural Luminaires *Only* - Examples
☐ **TS**:Single Tension for small and large Structural - PRA20-5188SB-TS
☐ **TD**:Double Tension for small and large Structural - PRA20-5188B-TD
☐ **TR**:Truss for small and large Structural - PRA20-5188SB-TR
☐ **XTS**:Single Tension for 1000W Structural - PRA20-5188B-XTS
☐ **XTD**:Double Tension for 1000W Structural - PRA20-5188B-XTD
☐ **XTR**:Truss for 1000W Structural - PRA20-5188B-XTR

© 2014 KIM LIGHTING • 16555 EAST GALE AVENUE, CITY OF INDUSTRY, CA 91745-1788 • TEL: 626/968-5666 • FAX: 626/968-5716

DocuSign Envelope ID: 330DEBD6-9A9E-4F34-BDCC-1AC1BAA701E9

Standard and Optional Features

Finish
TGIC powder coat paint over a titanated zirconium conversion coating.

Color:	Black	Dark Bronze	Light Gray	Stealth Gray™	Platinum Silver	White	Custom Color[1]
Cat. No.:	☐ **BL**	☐ **DB**	☐ **LG**	☐ **SG**	☐ **PS**	☐ **WH**	☐ **CC**

[1]Custom color subject to additional charges, minimum quantities and extended lead times. Consult representative. Custom color description:_____

Optional Hinged Base
Cat. No.
☐ **HB-X1**
☐ **HB-X2**
☐ **HB-Y1**
☐ **HB-Y2**
☐ **No Option**

Optional hinged base available for **FM**, **A**, and **B** mount poles up to **14 feet** only. The use of hinged bases requires some pre-planning so poles hinge in the right direction, as dictated by the surrounding environment.

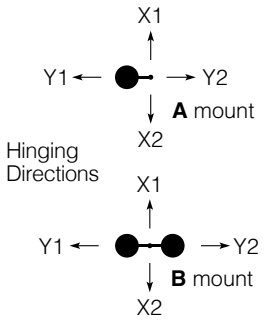

NOTE: For **FM** mount, use **HB-X1** base.

Optional Duplex Receptacle
Cat. No.
☐ **DR**
☐ **DR-GFI**
☐ **No Option**

Mounted opposite the handhole, at 22½" from base of pole, in a cast aluminum box that is internally welded and sealed with a gasketed self-closing cover and locking bracket.
Duplex Receptacle (DR) rated 20A., 125V.
Duplex Receptacle with Ground Fault Circuit Interrupter (DR-GFI) rated 20A., 125V.

© 2014 KIM LIGHTING • 16555 EAST GALE AVENUE, CITY OF INDUSTRY, CA 91745-1788 • TEL: 626/968-5666 • FAX: 626/968-5716

DocuSign Envelope ID: 330DEBD6-9A9E-4F34-BDCC-1AC1BAA701E9

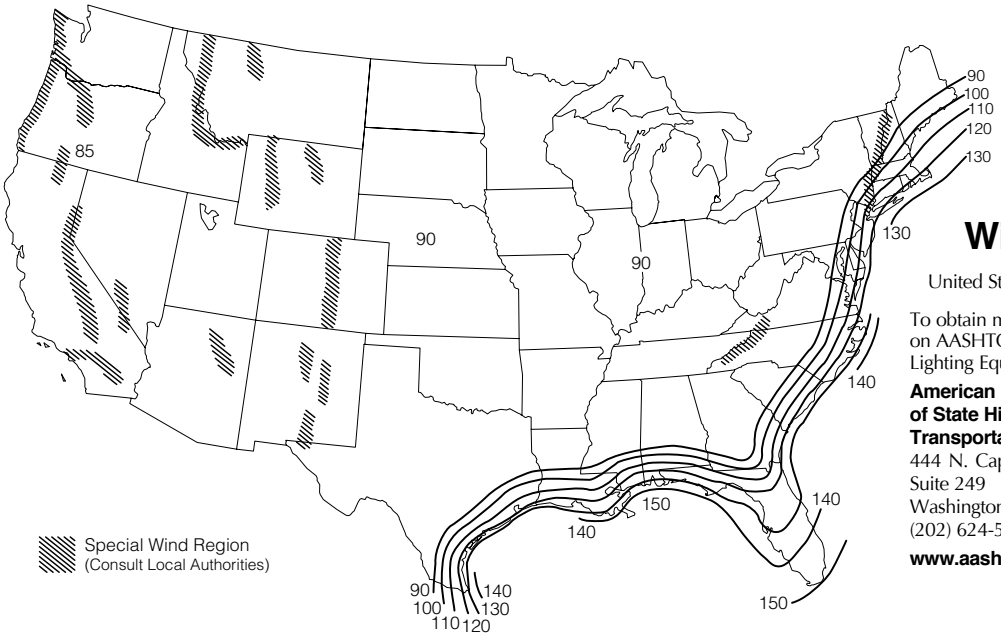

Wind Map

United States and Canada

To obtain more information on AASHTO Standards for Lighting Equipment contact:

American Association of State Highway and Transportation Officials:
444 N. Capitol Street, NW, Suite 249
Washington, DC 20001
(202) 624-5800
www.aashto.org

NOTES:

- Values are based on 50 year mean recurrence interval 30' above grade.
- Hawaii has an **105 mph** wind velocity.
- Puerto Rico has a **125 mph** wind velocity.
- Caution must be exercised in determining wind velocities in special wind areas such as:
  - Mountainous Regions
  - Areas surrounding the Great Lakes or other large bodies of water or open land.
  - Areas subject to extreme wind conditions, such as hurricanes, typhoons, cyclones, and tornadoes.
  - Areas adjacent to airports.
  - Any specific area with a known or suspected abnormally high intermittent wind condition caused by geography, adjacent structures, or other specific local conditions that may not be recorded in National Weather Service records.
- Allowable pole EPA for jobsite wind conditions must be equal to or greater than fixture EPA. Responsibility lies with the specifier for correct pole selection based on AASHTO wind map and job location.
- The Wind Map is intended only as a general guide. Always consult local authorities to determine maximum wind velocities, gusting and unique wind conditions for each specific application.
- **CAUTION:** Wind speeds and listed EPAs are for ground mounted installations. Poles mounted on structures (such as bridges and buildings) must consider vibration and coefficient of height factors beyond this general guide. Consult AASHTO standards.
- Extreme Wind Events: Hurricanes, Typhoons, Cyclones, or Tornadoes expose poles to flying debris, wind shear, and other unpredictable aerodynamic forces not indicated by the wind velocity ratings.
- Pole Strength Limited Warranty: Standard, unmodified Kim lighting Poles installed as recommended, undamaged by corrosion, or lack of maintenance, shall withstand steady wind conditions as provided on page **2** (Allowable Pole EPA). Installation of poles without luminaires, or attachment of any unauthorized accessories to poles shall void this warranty.

© 2014 KIM LIGHTING • 16555 EAST GALE AVENUE, CITY OF INDUSTRY, CA 91745-1788 • TEL: 626/968-5666 • FAX: 626/968-5716

DocuSign Envelope ID: 330DEBD6-9A9E-4F34-BDCC-1AC1BAA701E9

winonaLED Project: _____ Qty: _____

Type:

STEP11 • Rectangle

STEP

STEP11 Rectangle
QUICK FIND #: QF-2050

MOUNTING DETAIL

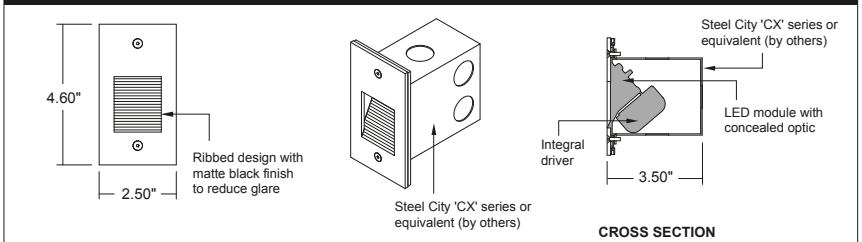

STEP11 Rectangle is a surface mount step light with a concealed optic. Five LED white temperatures and six LED colors are available in both normal and high output configurations.
Distribution: Three light distribution patterns are available.
Short: For narrow corridors.
Medium: For wide corridors.
Long: For large area illumination.
Construction: Die-cast housing with solid aluminum, brass, or stainless steel faceplates.
Mounting: Luminaire is mounted to a Steel City 'CX' series or equivalent junction box (by others) with two exposed fasteners.
Integral Driver: Integral drivers available for 120V-277V AC in both dimming and non-dimming versions.
Finish: Recessed surfaces have a ribbed design with a matte black finish to reduce glare. Faceplates in *natural metal finishes* have protective clear top coat. Faceplates in *painted* are finished with a two-part wet paint system. Primer only option allows for field painting.
Dimming: True 0-100% dimming is compatible with 0-10V fluorescent-type dimmer.
Power Consumption: Non-dimming unit consumes 2.5W (normal) or 3.5W (HO). Dimming unit consumes 4W (normal) or 6W (HO).
ETL Listed: Dry Location, Wet Location optional.
Note: Winona Lighting reserves the right to make design changes without prior notice.

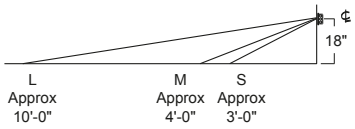

Typical Distribution Based on 30K/HO

Grid in 1' increments

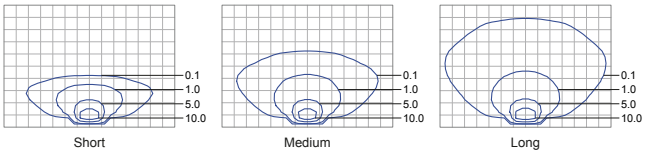

Lumen Output at 30K/HO

Size	Lumens	Normal Lm/W	HO Lm/W
Short	50	7.1	14.1
Medium	60	8.6	17.3
Long	76	10.9	21.8

LED lighting facts

See page 3 for lighting facts labels.

PRODUCT SPECIFICATION

LED	– STEP11	– RECT	–	–	–	–	–	–
SOURCE	**MOUNT**	**FACEPLATE**	**DISTRIBUTION**	**LED CODE**	**VOLTAGE**	**FINISH**	**OPTIONS**	**SPECIAL**
LED	STEP11	**RECT -** rectangle See individual submittals for these other options: **RND -** round **SQU -** square	**S -** short **M -** medium **L -** long	**27K -** ansi-binned 2700K **27K/HO -** ansi-binned 2700K high output **30K -** ansi-binned 3000K **30K/HO -** ansi-binned 3000K high output **35K -** ansi-binned 3500K **35K/HO -** ansi-binned 3500K high output **40K -** ansi-binned 4000K **40K/HO -** ansi-binned 4000K high output **50K -** ansi-binned 5000K **50K/HO -** ansi-binned 5000K high output **003 -** amber normal output **003/HO -** amber high output **004 -** blue normal output **004/HO -** blue high output **005 -** cyan normal output **005/HO -** cyan high output **006 -** green normal output **006/HO -** green high output **007 -** red-orange normal output **007/HO -** red-orange high output **008 -** red normal output **008/HO -** red high output IES report available for normal & high output. (See website)	*Non-Dimming* **ND120V - 277V** *Dimming* **DM120V - 277V *** * 0-10V dimmer required (by others)	*Natural Metal Finishes* **BAL -** brushed aluminum **BB -** brushed brass **BSS -** brushed stainless steel **PB -** polished brass **PSS -** polished stainless steel **CMF -** custom metal finish (consult factory) *Painted Finishes* **AB5 -** antique brass paint **BBP -** brushed brass paint **LBPS -** light bronze paint smooth **LSP -** light silver paint **PGP -** pale gold paint **SGB -** semi-gloss black paint **SGW -** semi-gloss white paint **PRM -** primer only **CPF -** custom paint finish (consult factory)	**X -** no options **WL -** wet location	**STD -** standard **MOD -** modified
Modification:								

Visit www.winonalighting.com for the most complete and current information.

All fixtures ETL listed, USA and Canada

WINONA solutions | forms | light
AcuityBrands

Winona Lighting • 3760 West Fourth Street • Winona, MN 55987
800-328-5291 • www.winonalighting.com

Version 9/2013

Project: IERBYS TEMPORARY IMPROVEMENTS
HLB Project #: 12141
Project ID 04-15000182

March 17th, 2015
Final Permit Set
265100-Lighting Fixtures, Lamps, Ballasts

Type: FX6

LIGHTING CONTROL CUT SHEET Note: This document is for information only. Refer to specifications for all catalog numbers, etc.

DocuSign Envelope ID: 330DEBD6-9A9E-4F34-BDCC-1AC1BAA701E9

POWER SUPPLY / DIMMING

All STEPS models are available with Dimming and Non-Dimming internal drivers in both 120V and 277V input versions. Dimming drivers require a 0-10V fluorescent-type dimming control.

Read all instructions before installation. Do not make live connections!

NON-DIMMING INSTALLATIONS

Connect STEP **WHITE** wire to power **NEUTRAL**.
Connect STEP **BLACK** wire to power **HOT**.
Connect STEP **GREEN** wire to power **GROUND**.

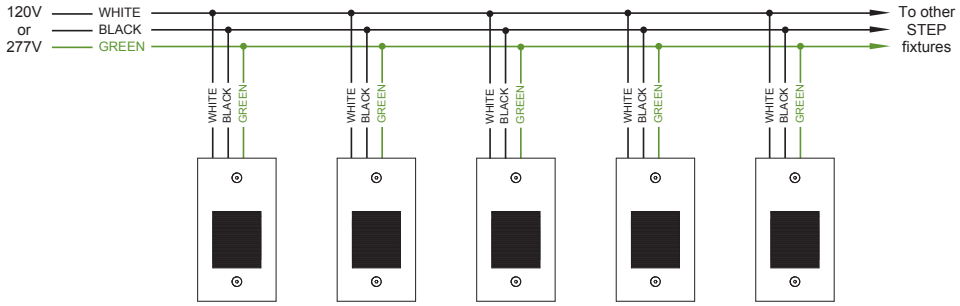

DIMMING INSTALLATIONS

The integral dimming driver is designed to the 0-10V IEC dimming specification 60929 and is compatible with common 0-10V dimmers and dimming systems. Do NOT connect line voltage to dimming input wires.
Connect STEP **WHITE** wire to power **NEUTRAL**.
Connect STEP **BLACK** wire to power **HOT**.
Connect STEP **VIOLET** wire to **POSITIVE INPUT** of Dimming Control.
Connect STEP **GREY** wire to **NEGATIVE INPUT** of Dimming Control.

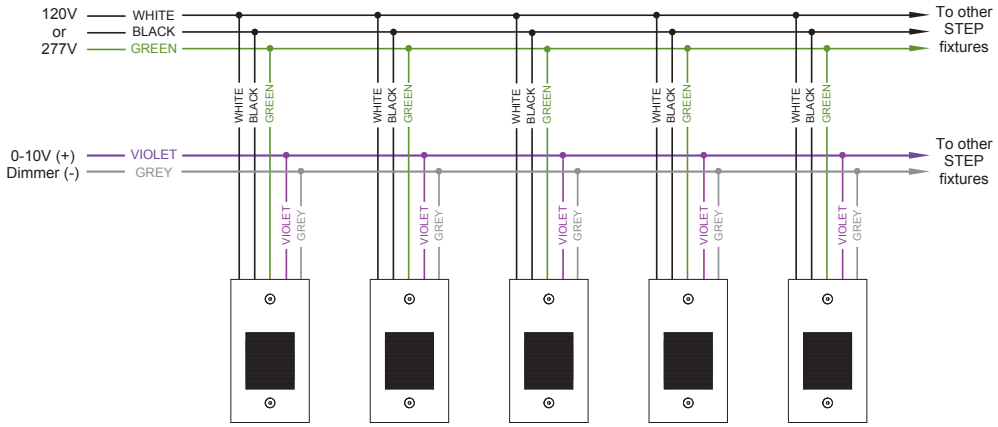

DocuSign Envelope ID: 330DEBD6-9A9E-4F34-BDCC-1AC1BAA701E9

ENTRA12YW

Affordable, high-performance, low-maintenance LED doorway light. Suitable for mounting heights up to 10', and replaces 70W high pressure sodium. 100,000-Hour LED lifespan. 5-Year warranty.

Color: White

Weight: 3.0 lbs

Project:	Type:
Prepared By:	Date:

Driver Info		LED Info	
Type:	Constant Current	Watts:	12W
120V:	0.3A	Color Temp:	3000K (Warm)
208V:	0.3A	Color Accuracy:	84 CRI
240V:	0.3A	L70 Lifespan:	100,000
277V:	0.3A	LM79 Lumens:	876
Input Watts:	14W	Efficacy:	62 LPW
Efficiency:	85%		

Technical Specifications

Listings

UL Listing:

Suitable for wet locations as downlight. Suitable for mounting within 1.2m (4ft) of the ground.

ADA Compliant:

ENTRA™ is ADA Compliant.

IESNA LM-79 & LM-80 Testing:

RAB LED luminaires have been tested by an independent laboratory in accordance with IESNA LM-79 and LM-80, and have received the Department of Energy "Lighting Facts" label.

Other

ENERGY STAR:

This product is ENERGY STAR® qualified.

Lens/Housing Cover:

Vandal resistant polycarbonate molded housing cover and lens.

Reflectors (2):

White aluminum reflector topped with vacuum metalized polycarbonate LED reflector.

Warranty:

RAB warrants that our LED products will be free from defects in materials and workmanship for a period of five (5) years from the date of delivery to the end user, including coverage of light output, color stability, driver performance and fixture finish.

Country of Origin:

Designed by RAB in New Jersey and assembled in the USA by RAB's IBEW Local 3 workers.

Buy American Act Compliant:

This product is a COTS item manufactured in the United States, and is compliant with the Buy American Act.

Recovery Act (ARRA) Compliant:

This product complies with the 52.225-21 "Required Use of American Iron, Steel, and Manufactured Goods-- Buy American Act-- Construction Materials (October 2010).

Trade Agreements Act Compliant:

This product is a COTS item manufactured in the United States, and is compliant with the Trade Agreements Act.

GSA Schedule:

Suitable in accordance with FAR Subpart 25.4.

Construction

IP Rating:

Ingress Protection rating of IP66 for dust and water.

Cold Weather Starting:

The minimum starting temperature is -40°F/-40°C.

Ambient Temperature:

Suitable for use in 40°C (104°F) ambient temperatures.

Thermal Management:

Superior thermal management with internal Air-Flow fins and external air vents.

Housing:

Die-cast aluminum.

Mounting:

Heavy die cast aluminum with 1/2" back knockout and mounting template for mounting to 4" box.

Recommended Mounting Height:

Up to 10 ft.

Gaskets:

High-temperature silicone.

Finish:

Our environmentally friendly polyester powder coatings are formulated for high-durability and long-lasting color, and contains no VOC or toxic heavy metals.

Green Technology:

Mercury and UV free, and RoHS compliant.

LED Characteristics

LED:

12W multi-chip, long life LED.

Lifespan:

100,000-hour LED lifespan based on IES LM-80 results and TM-21 calculations.

Correlated Color Temp. (Nominal CCT):

3000K

Color Stability:

LED color temperature is warrantied to shift no more than 200K in CCT over a 5 year period.

Copyright © 2014 RAB Lighting Inc. All Rights Reserved Note: Specifications are subject to change at any time without notice

DocuSign Envelope ID: 330DEBD6-9A9E-4F34-BDCC-1AC1BAA701E9

ENTRA12YW

Technical Specifications (continued)

LED Characteristics

Color Consistency:

3-step MacAdam Ellipse binning to achieve consistent fixture-to-fixture color.

Electrical

Driver:

Constant Current, Class 2, 100-277V, 50/60Hz, 4kV Surge Protection, 350mA, 100-240VAC: 0.3 - 0.15 A, 277VAC: 0.15 A, Power Factor: 98.6%.

Custom

THD:

10.5 at 120V

California Title 24:

ENTRA12 complies with 2013 California Title 24 building and electrical codes as a residential outdoor fixture. See ENTRA12/PC for a model that complies as a commercial outdoor non-pole-mounted fixture ≤ 30 Watts.

Patents:

The design of the ENTRA™ is protected by patents pending in US, Canada, China, Taiwan and Mexico.

Dimensions

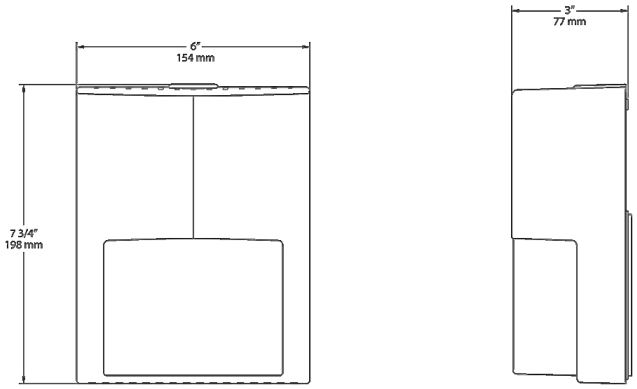

Features

- Save over $700 in energy costs over life of fixture
- Equivalent to 70W high pressure sodium
- Durable vandal-resistant polycarbonate housing
- Low-profile and ADA compliant
- 100,000-hour LED lifespan
- 5-Year warranty

Copyright © 2014 RAB Lighting Inc. All Rights Reserved Note: Specifications are subject to change at any time without notice

Project: IERBYS TEMPORARY IMPROVEMENTS
HLB Project #: 12141
Project ID 04-15000182

March 17th, 2015
Final Permit Set
265100-Lighting Fixtures, Lamps, Ballasts

Type: FX7

LIGHTING CONTROL CUT SHEET Note: This document is for information only. Refer to specifications for all catalog numbers, etc.

DocuSign Envelope ID: 330DEBD6-9A9E-4F34-BDCC-1AC1BAA701E9

SECTION 99-270528

TELECOMMUNICATIONS RACEWAYS AND ACCESSORIES

PART 1 - GENERAL

1.1 DESCRIPTION

A. Provide telecommunication raceways, boxes and all accessories in accordance with the Contract Documents.

1.2 QUALITY ASSURANCE

A. Telephone service provider approval of incoming service installation.

B. Cable television service provider approval of incoming service installation.

1.3 REFERENCE STANDARDS

A. ANSI/TIA/EIA-568-B

B. BICSI (Building Industry Consulting Service International)

C. NEC (National Electrical Code)

D. NEMA VE

E. Telephone service provider requirements.

F. Cable television service provider requirements.

G. NUSIG, with California and local amendments, as applicable.

1.4 SUBMITTALS

A. Conduit and Boxes:
   1. Coordinated conduit layout drawings, ⅛-inch scale minimum. Show routing of all conduits of trade size 2-inch or larger. Show locations of all pull splice or termination (outlet) boxes connected to conduits of trade size 2-inch or larger.

B. J-Hooks and Individual Supports:
   1. Manufacturer's cut sheets.
   2. ⅛-inch scale plans showing major J-hook/cable supports runs.
   3. Details and plans of cable tray supporting methodology.
   4. Seismic restraint calculations for cable tray.

1.5 IDENTIFICATION

A. Mark each telecommunications conduit and box with a unique identifier as required by the Contract Documents.

PART 2 - PRODUCTS

2.1 TELECOMMUNICATION BACKBOARDS

A. Fire-retardant plywood painted with two coats of light-colored paint. Mask one stamp per plywood sheet, so it will remain visible after painting.

B. ¾ inch thick by 8 feet high by length as shown on the Drawings. Extend full height of room for sections above or below floor or wall sleeves.

2.2 ACCEPTABLE MANUFACTURERS

A. Boxes (not exposed in public or tenant areas): UL Listed and labeled products of any manufacturer meeting the specified performance requirements are acceptable.

B. Wall Boxes or Floor Boxes (if exposed in public or tenant areas): FSR, Wiremold, Hubbell, Russell-Stoll, Steel City, Sun West Engineering, or approved equal.

C. Fire-Rated Poke-Through Devices: Wiremold, Hubbell, or approved equal.

DocuSign Envelope ID: 330DEBD6-9A9E-4F34-BDCC-1AC1BAA701E9

2.3 CONDUIT AND FITTINGS

A. Rigid Metal Conduit (RMC):
   1. Rigid conduit, heavy wall, threaded ends.
   2. Threaded type fittings.

B. Intermediate Metallic Conduit (IMC):
   1. Rigid conduit, thinner wall, threaded ends.
   2. Threaded type fittings.

C. Electrical Metallic Tubing (EMT):
   1. Continuous, seamless steel tubing galvanized or sherardized on exterior, coated on interior with smooth hard finish of lacquer, varnish or enamel.
   2. Steel, set screw or compression type fittings. Provide concrete type fittings where required.

D. Flexible Steel Conduit:
   1. Single strip, continuous, flexible interlocked double-wrapped steel, hot-dip galvanized inside and out forming smooth internal wiring channel.
   2. Steel, compression type fittings.

E. Liquid-Tight Flexible Conduit:
   1. Same as flexible steel conduit except with tough, inert, water-tight plastic outer jacket.
   2. Fittings shall be cast malleable iron body and gland nut, cadmium-plated with one-piece brass grounding bushings threaded to interior of conduit. Spiral molded vinyl sealing ring between gland nut and bushing and nylon-insulated throat.

F. Rigid Non-metallic Conduit:
   1. Schedule 40 polyvinyl chloride suitable for 90 degrees C.
   2. Solvent cemented type fittings.

2.4 OUTLET, JUCTION, AND PULL BOXES

A. Cast Type Boxes:
   1. Ferrous alloy box with inside threaded hubs for rigid steel conduit.
   2. Aluminum box with threaded hubs for rigid aluminum conduit.
   3. Ferrous alloy box with compression or inside threaded hubs with adapter for electrical metallic tubing.
   4. Cast raised cover, size matched to contour of box.
   5. Tapered threads for hubs.

B. Galvanized Pressed Steel Type Boxes:
   1. Pressed steel, galvanized or cadmium-plated, $4^{11}/_{16}$ inch square by 2⅛ inch deep minimum with extension ring as required.

C. Sheet Steel Boxes:
   1. No. 12 gauge sheet steel for boxes with maximum side less than 40 inches, and maximum area not exceeding 1,000 square inches; riveted or welded ¾-inch flanges at exterior corners.
   2. No. 10 gauge sheet steel for boxes with maximum side 40 to 60 inches, and maximum area 1,000 to 1,500 square inches; riveted or welded ¾-inch flanges at exterior corners.
   3. No. 10 gauge sheet steel riveted or welded to 1½ inch by 1½ inch by ¼ inch welded angle iron framework for boxes with maximum side exceeding 60 inches and more than 1,500 square inches in area.
   4. Covers:
      a. Same gauge as box.
      b. Subdivided single covers so no section of cover exceeds 50 pounds.
      c. Machine bolts or machine screws threaded into tapped holes.
   5. Paint:
      a. Rust-inhibiting primer, ANSI 61 gray enamel finish coat.

DocuSign Envelope ID: 330DEBD6-9A9E-4F34-BDCC-1AC1BAA701E9

2.5 SLEEVES

A. Sleeves shall be 4-inch EMT. Extend floor sleeves a minimum of 4 inches above and below finished floor. Extend wall sleeves a minimum of 4 inches on either side of wall. Sleeve ends shall be protected with a bushing.

B. Provide sleeves between floors of telecommunication closets in quantities and locations as shown on the Drawings.

2.6 J-HOOKS AND INDIVIDUAL CABLE SUPPORTS

A. Provide a system of overhead- and wall-mounted J-Hooks, cable slings or other individual cable supports adequately secured to the structure. J-Hooks shall be galvanized steel, smooth edges suitable for supporting telecommunications cabling. Cable slings shall be of flexible construction suitable for supporting telecommunications cabling. All J-Hooks, cable slings and individual cable supports shall be approved for installation in a return-air ceiling plenum.

PART 3 - EXECUTION

3.1 GENERAL

A. Provide conduit and pull boxes for all telecommunications cabling routed outside of telecommunications closets or equipment rooms except:
   1. Where accessible cable tray is installed for these cables.
   2. Where the Contract Documents specifically allow cables to be routed overhead by means of “J-Hooks”, approved surface-mounted raceway/wireway, an approved flexible cable support system, or similar approved means.
   3. Where the Contract Documents specifically allow the use of the “ring and string” method for installing cables to outlets in partition walls.

B. Except where other specific sizes are required by the Contract Documents, the minimum size for telecommunications conduits shall be:
   1. 4 inches for backbone pathways (between the telecommunications entrance facility room and telecommunications closets).
   2. 3 inches to connect telecommunications closets on the same floor of a multi-story building.
   3. 1.25 inches where a conduit serves a maximum of two nearby typical outlets.
   4. 1 inch where a conduit serves a single typical outlet. (voice, data, TV.)
   5. 0.75 inch where a conduit serves a single wall-phone outlet, a single pay telephone, or a single elevator phone connection.

C. Elbows for conduit installed below grade or embedded within floor slabs shall be rigid steel conduit with two coats of corrosion-resistant paint or tape wrap.

D. Tie embedded raceways securely in place prior to concrete placement. Raceways installed below or within floor slabs shall extend a minimum of 4 inches above the finished slab or housekeeping pad to the first connector. Install capped bushings on conduit stub-ups.

E. Locate raceways so that the integrity of structural members is not affected and they do not conflict with the services of other trades. Draw up couplings and fittings full and tight. Protect threads from corrosion after installation with zinc chromate or equivalent protection.

F. Conceal raceways except at surface-mounted cabinets and freestanding equipment. Install minimum of 6 inches from flues, steam pipes, or other heated lines. Provide flashing and counter-flashing for waterproofing of raceways that penetrate the roof. Do not penetrate waterproof membranes unless proper seal is provided. Install telecommunications raceways a minimum of 24 inches from parallel power raceways; avoid long parallel runs of telecommunications and power conduits to the extent practicable. When crossing power raceways, cross at a 90-degree angle. Route exposed raceways and raceways above suspended ceiling parallel or perpendicular to building lines with right-angle turns and symmetrical bends. Provide sleeves in concrete walls, floor slabs and partitions. Waterproof sleeved raceways where required. Fire stop penetrations with UL Listed fire-rated assemblies.

DocuSign Envelope ID: 330DEBD6-9A9E-4F34-BDCC-1AC1BAA701E9

G. Provide raceway expansion joints for exposed and concealed raceways at expansion joints, between structures to compensate for differential movement and where necessary to compensate for thermal expansion/contraction. Provide bonding conductor.

H. Provide raceways with appropriate seal-offs, explosion-proof fittings, etc. in special occupancy areas as required. Provide conduit seal-offs where portions of an interior raceway system pass through walls, ceilings or floors which separate adjacent rooms having substantially different maintained temperatures, refrigeration or cold storage rooms.

I. Provide pull cord in empty raceways. Tag both ends noting destination.

J. Clear raceway of all obstructions and dirt prior to pulling in wires or cables. Use ball mandrel (diameter approximate 85 percent of conduit insider diameter) followed by close-fitting wire brush and wad of felt or similar material. This assembly may be pulled with, but ahead of cable being installed. Clean empty raceways similarly. Clear or replace any raceway with rejects ball mandrel.

K. Secure raceway clamps or supports to masonry materials with toggle bolts, expansion bolts, or steel inserts. Install raceway on steel construction with approved clamps which do not depend on friction or set-screw pressure alone.

L. Raceways Embedded in Floor Slabs:
   1. Raceways shall not be installed in slab without the approval of the Structural Engineer.
   2. Raceways shall not interfere with placement of floor slab reinforcement components.
   3. Install raceways between the upper and the lower layers of reinforcing steel.
   4. Space raceways not less than 8 inches on centers except where they converge at telecommunications backboards, equipment cabinets or junction boxes.
   5. Raceways running parallel to slabs supports, such as beams, columns and structural walls, shall be installed not less than 12 inches from such supporting elements.
   6. Secure raceways in place prior to the concrete pour so that the raceways are not moved sideways or floated to the top of the slab during the placement of the concrete.

M. Non Metallic Raceway Installations:
   1. Joints shall be made using the material recommended by the raceway manufacturer. Components shall be cleaned prior to assembly.
   2. Raceway cut-offs shall be square and shall not deform conduit. Ream rough surfaces.
   3. Provide male box adapters to terminate raceways.
   4. Where separable terminations are required, provide PVC threaded adapters with locknuts or bushings. Provide “O” rings for water-tight installations.
   5. Bends shall be made by methods that do not deform or damage the conduit.
   6. Provide expansion fittings where required.
   7. Raceway supports shall be installed to allow the non-metallic conduit to slide through the supports.
   8. Non-metallic raceway is not permitted within the building.

N. Raceways above Suspended Ceilings:
   1. Single runs of 0.5-inch or 0.75-inch raceways may be supported from ceiling support wires where permitted by the rating of the ceiling system.
   2. Provide independent support of raceways larger than 0.75 inches. Provide independent support of multiple raceways (more than one). Provide unistrut support and threaded rod to structure above. Attachment to ceiling support wires is not permitted.
   3. Provide independent support of raceways installed above fire-rated ceilings. Attachment to ceiling support wires is not permitted.
   4. Install conduit 1 foot-0 inches minimum above top of ceiling.

O. Raceways and fittings installed in hazardous (classified) locations shall conform to NEC Article 500 requirements for the associated Class and Division.

P. Provide high-impact thermoplastic insulating bushings on sleeve and raceway ends. Provide metallic capped insulating bushings on conduits larger than 2 inches.

Q. Fire-seal floor sleeves and sleeves in fire-rated walls to maintain fire rating of wall after telephone cables are installed with a UL Listed fire-step assembly.

DocuSign Envelope ID: 330DEBD6-9A9E-4F34-BDCC-1AC1BAA701E9

R. Arrange raceway runs less than 100 feet from point to point so that they contain no more than two 90-degree standard factory bends or three 90-degree, 24-inch radius bends. Provide pull boxes in raceway runs exceeding 100 feet from point to point with more than one 90-degree bend. Raceway runs shall not contain Condulet® type fittings.

3.2 TRANSITIONS BETWEEN DIFFERENT TYPES OF CONDUIT

A. Provide a pull box where a transition is made from fixed raceways (RMC, IMC or EMT) to flexible conduit, UON.

3.3 OUTLET, JUNCTION AND PULL BOXES

A. Provide outlet, junction, and pull boxes as indicated and as required for a complete installation and to facilitate proper pulling of wires and cables. Boxes shall be sized per ANSI/TIA/EIA-569-B as minimum. (For single conduits trade size 1¼ inch, or smaller, an outlet box sized $4^{11}/_{16}$ inches square by 2⅛ inches deep may be used as a pull box, UON.) Plug open knock-outs.

B. The exact location of outlets and equipment is governed by field conditions. Where necessary, relocate outlets so that fixtures and equipment are symmetrically located in accordance with the room layout and will not interfere with other work or equipment. Verify final location of outlets, fixtures, and equipment with Architect.

C. Back-to-back outlets in the same wall, or “through-wall” type boxes, are not permitted. Provide 12-inch minimum spacing for outlets shown on opposite side of a common wall. Provide acoustical potting compound on outlet boxes installed in private offices and conference rooms.

D. Fit outlet boxes in finished ceilings or wall with appropriate covers, set flush with the finished surface. Where more than one outlet mounting device is located at one point, use multiple gang boxes and covers. Provide outlet boxes of type and size suitable for the specific application. Provide barriers where required for voltage or systems separation.
   1. Provide a single gang plaster ring and a pull string to nearest accessible ceiling location.
   2. Provide a stainless steel coverplate with grommeted hole for furniture system connections.

E. Pull boxes shown in the Drawings are generally a minimum requirement that assumes the conduit run shall be the length indicated and there shall be no more bends than indicated. Actual site conditions and field coordination with other trades usually result in additional bends in the conduit and sometimes cause the length of the run to be greater than shown. Therefore, install pull boxes in all telecommunications conduit runs so that the following conditions are met:
   1. Install pull boxes as required in conduit runs so that the distance between pull points is less than 100 feet.
   2. Install pull boxes in conduit runs so that a run of conduit does not contain more than the equivalent of two (2) 90-degree bends (180 degrees total) between pull points.
   3. Install pull boxes only in straight sections of conduit, NOT in lieu of a bend.
   4. Do NOT use Condulet® type fittings in runs of telecommunications conduit.

3.4 APPLICATIONS OF RACEWAYS

A. Rigid Metal Conduit or Intermediate Metal Conduit:
   1. Where exposed to physical damage.
   2. Indoors where exposed to moisture.
   3. Where required by code. (Note particularly Section 800-40, NEC.)
   4. Exposed indoor installations within 10 feet above finished floor.

B. Electrical Metallic Tubing:
   1. General purpose distribution of telecommunications cabling, except where another conduit type is specifically required.

C. Flexible Steel Conduit:
   1. Dry locations only.
   2. Connections to modular furniture.
   3. Connections to movable equipment.
   4. Raised floor access box connection in raised floor locations.
   5. Maximum length shall be 6 feet.

DocuSign Envelope ID: 330DEBD6-9A9E-4F34-BDCC-1AC1BAA701E9

D. Liquid-Tight Flexible Steel Conduit:
   1. Same as flexible steel conduit in damp or wet locations.

E. Rigid Non-metallic Conduit:
   1. Below slab on grade.
   2. Embedded in floor slabs.

3.5 APPLICATION OF OUTLET, JUNCTION AND PULL BOXES

A. Cast Type Boxes:
   1. Where connected to rigid metal conduit, intermediate metal conduit and liquid-tight flexible conduit, 1¼ inches and smaller.
   2. Exposed conduit installations within 10 feet above finished floor.
   3. Where exposed to moisture and outdoors.

B. Galvanized Pressed Steel Type Boxes:
   1. Where connected to electrical metallic tubing and flexible steel conduit, 1¼ inches and smaller.
   2. Dry locations.
   3. Where concealed in walls and above suspended ceilings.
   4. The size for the typical outlet box for wall-mounted telecommunications outlets shall be $4^{11}/_{16}$ inches square by 2⅛ inches deep with a two-gang plaster ring, UON.

C. Sheet Steel Boxes:
   1. Where connected to conduit larger than 1¼ inches.

END OF SECTION

DocuSign Envelope ID: 330DEBD6-9A9E-4F34-BDCC-1AC1BAA701E9

SECTION 99-283000

FIRE MANAGEMENT SYSTEM

PART 1 - GENERAL

1.1 DESCRIPTION

A. Provide a microprocessor controlled, electrically supervised fire management system in accordance with the Contract Documents. Provide detailed system design, all equipment, tools, drawings, labor, materials, accessories, and approvals from governing agencies required to furnish, install, start up, and test a complete operating fire management system. Systems shall be provided and placed into operation in accordance with the requirements of the Authority Having Jurisdiction (AHJ).

B. The system shall include (but not be limited to) the following functions:
   1. Smoke and fire detection
   2. Sprinkler suppression system monitoring
   3. Other fire suppression system monitoring
   4. Smoke management
   5. Releasing service
   6. One-way voice communication notification system
   7. Two-way voice communication system

C. Labor, materials including conduit and wiring, and accessories not specifically called for in the Contract Documents but required to provide complete, operating, and approved systems, shall be provided within the scope of the Contract.

D. Determine, coordinate, and incorporate the design and construction requirements of the architectural, structural, fire protection and mechanical systems, and auxiliary systems including food service, fire doors and windows, elevators, and other related systems, to fully meet all code requirements.

E. The purpose of the Contract Drawings and this performance-based Specification is to convey the scope of work required, all of which the Contractor is responsible to furnish, install, adjust, and make operable.

F. The Contractor shall provide all devices and equipment required by these specifications and drawings. The intent of these specifications and drawings is to convey the general requirements and approximate device locations and quantities. A complete set of shop drawings shall be submitted, stamped and signed by the Subcontractor as the Engineer of Record for the system. Under no circumstances shall the Contractor delete any equipment without the written directive of the Owner and Architect.

G. Fire alarm devices are indicated on plans for architectural coordination and general design intent, and do not necessarily represent the actual quantity of devices required. The Contractor is responsible for providing the quantity of devices required for complete coverage, and to meet the requirements of the codes and of the AHJ. If additional devices are required, they shall be provided and installed at no additional cost to the Owner. Provide all required conduit, wire, panels, controls, auxiliary devices, accessories, testing, etc. for a complete and functional operating system.

H. The fire management system shall be a stand-alone system operating independently of other control systems.

I. Provide dedicated 120V power to all equipment and booster panels as required, and connect to the emergency power system. See electrical drawings for emergency power panel locations. Connect to the nearest panel, unless otherwise noted on the drawings.

J. Related work specified in other divisions of these specifications:
   1. Sprinkler water flow and tamper switches.
   2. Magnetic door holders and electric door locking hardware.
   3. Installation of duct type smoke detectors.

DocuSign Envelope ID: 330DEBD6-9A9E-4F34-BDCC-1AC1BAA701E9

4. Security system.
5. Hardware sets.
6. Fire doors and windows.
7. Supervision and trouble status of emergency radio amplification system.

K. The Fire Management System contract is a performance-based contract. The Contractor shall develop a complete set of code-compliant and fully coordinated construction documents to the satisfaction of the Authorities Having Jurisdiction. The fire alarm system manufacturer and Contractor shall provide all required documentation, obtain all required permits and approvals, and shall provide all devices and accessories in the quantities and locations necessary for a fully functional and code-compliant system.

1.2 QUALITY ASSURANCE

A. Provide engineering design, equipment and labor to provide a complete and operating system.

B. Obtain Fire Department approval of the fire management system and installation.

C. Manufacturer and equipment supplier shall have a minimum of ten years' prior experience in the Bay Area. Equipment supplier shall have 24-hour parts and labor service available with a maximum 4-hour response time.

D. The Contractor shall have successfully installed similar fire detection, evacuation voice and visual signaling, and smoke control systems in a previous project of comparable size and complexity.

E. The Contractor shall employ NICET (minimum Level II – Fire Alarm Technology) technicians on-site to guide the final checkout and to ensure the systems integrity.

F. Contractor shall be Factory Authorized by the system manufacturer and technicians shall be Factory Certified to perform the installation work in this Section.

G. Prior to making required submittals, the Contractor shall meet with the Fire Department and make an informal presentation of the fire management system. Meeting minutes shall be issued and submitted with the submittal drawings, with comments incorporated into the required submittals.

1.3 DESIGN REQUIREMENTS

A. The fire management system submittal drawings shall be prepared under the supervision of a Professional Engineer registered in the State of California, and submitted drawings and calculations shall bear the Engineer's stamp.

B. The Contractor shall have in-house engineering and project management capability consistent with the requirements of the project. Qualified representatives of the system manufacturer shall perform the detailed engineering design of central and remote control equipment, and shall produce all panel and equipment drawings, submittals and operating manuals. The Contractor is responsible for detailed system design and documentation, coordination of system installation requirements and final system testing in accordance with these specifications.

C. Previous system architecture with spare capacity already built in within fire alarm panels for batteries and for amplifiers for an additional 20% increase to quantity of speakers, strobes, and duct smoke detectors. Contractors bid shall include the necessary components for this spare capacity, as well as a total of 5% additional speakers, strobes, and duct smoke detectors.

1.4 REFERENCE STANDARDS

The following standards and guides (latest edition except where noted) are hereby made a part of this work by reference thereto:

A. Americans with Disabilities Act (ADA)

B. Local Building and Fire Department Requirements

C. American National Standards Institute (ANSI) / American Society of Mechanical Engineers (ASME) A17.1, Safety Code for Elevators and Escalators

D. American National Standards Institute (ANSI) / American Society of Mechanical Engineers (ASME) A17.3, Elevator Code for Existing Elevators

E. International Building Code (Applicable Edition) with Local Amendments

DocuSign Envelope ID: 330DEBD6-9A9E-4F34-BDCC-1AC1BAA701E9

F. California Building Code (Applicable Edition) with Local Amendments
G. NFPA 1 – Uniform Fire Code (Applicable Edition) with Local Amendments
H. NFPA 13 – Sprinkler Systems
I. NFPA 20 – Standard for the Installation of Stationary Pumps for Fire Protection
J. NFPA 70 – National Electrical Code (Applicable Edition) with Local Amendments
K. NFPA 72 – National Fire Alarm Code with Local Amendments
L. NFPA 90A – Air Conditioning and Ventilating Systems
M. NFPA 101 – Life Safety Code
N. NFPA 110 – Emergency and Standby Power Systems
O. Owner's Insurance Underwriter
P. State Fire Marshal
Q. UL Standard 33 – Releasing Devices
R. UL Standard 38 – Manual Alarm Stations
S. UL Standard 217 – Smoke Detectors – Single/Multiple Stations
T. UL Standard 228 – Door Holders – Closers
U. UL Standard 268 – Smoke Detectors for Fire Protective Signaling Systems
V. UL Standard 268A – Smoke Detectors for Duct Application
W. UL Standard 521 – Heat Detectors for Fire Protective Signaling Systems
X. UL Standard 864 – Control Units for Fire Protective Signaling Systems
Y. UL Standard 1424 – Cables for Power-Limited Fire Protective Signaling Systems
Z. UL Standards 464 and 1480 – Audible Devices, Speakers for Fire Protective Signaling Systems
AA. UL Standard 1481 – Power Supplies for Fire Protective Signaling Systems
BB. UL Standard 1711 – Amplifiers for Fire Protective Signaling Systems
CC. UL Standard 1971 – Visual Signaling Appliances

1.5 ABBREVIATIONS

A. ADA Americans with Disabilities Act
B. AHJ Authority Having Jurisdiction
C. ECC Engineer's Control Center
D. FACP Fire Alarm Control Panel
E. FARA Fire Alarm Remote Annunciator
F. FARP Fire Alarm Remote Panel
G. FATC Fire Alarm Terminal Cabinet
H. FCC Fire Control Center
I. FCIP Firefighter's Control and Indicating Panel
J. FTS Firefighter's Telephone System
K. NFPA National Fire Protection Association
L. SCC Security Control Center
M. UL Underwriters Laboratories Inc.
N. VCS Voice Communication System

1.6 SUBMITTALS

A. Minutes of fire management system Contractor's meeting with Fire Department.
B. Manufacturer's product data sheets for equipment including State Fire Marshal listing numbers.

DocuSign Envelope ID: 330DEBD6-9A9E-4F34-BDCC-1AC1BAA701E9

C. Floor plans (minimum ⅛-inch scale) with room names and numbers, showing device locations and interconnecting conduit and wire. Include location of fire/smoke barrier walls.

D. Floor plan (minimum ½-inch scale) of the FCC indicating fire management system equipment, equipment furnished by others (including generator and fire pump annunciators), tables, plan racks, and required clearances. Elevations (minimum ½-inch scale) of each wall of the FCC.

E. Drawings shall show proposed layout and anchorage of equipment and appurtenances and equipment relationship to other parts of the work, including clearances for maintenance and operation.

F. Riser diagram showing devices, equipment, and interconnecting conduit and wire.

G. Scaled detail drawings of FACP, FARA, FARPs, FCIP, FTS, and VCS panel fronts.

H. Wiring diagram for each device. Include connection details to auxiliary equipment.

I. Control and wiring diagrams for smoke control sequences.

J. Complete narrative of the sequence of operation.

K. Sequence of operation matrix table including a complete line-by-line listing of fire alarm initiating devices, corresponding device address, and input/output matrix.

L. Voltage drop calculations.

M. Battery sizing calculations.

N. VCS amplification sizing calculations.

O. Visual alarm power supply sizing calculations.

P. Power supply calculations for magnetic door holders, and electric door locking hardware.

Q. Wire identification schedule.

R. Seismic restraint calculations.

S. All drawings must be stamped and signed for approval by the Fire Marshal.

1.7 FIELD TESTING

A. All testing must be in accordance with current NFPA 72 standards and requirements. Refer to PART 3 for additional testing requirements.

B. Wiring shall be inspected and tested for continuity and short circuits.

C. Field Test Reports shall include at minimum the following:

1. Certification that equipment has been properly installed and is in satisfactory operating condition.
2. Sensitivity settings for smoke detectors.
3. Detailed operational test report in matrix form indicating each initiating device, each signaling device, each communication device, and each control and indicating light on each piece of equipment. Report shall certify the following:
   a. Successful operation of each alarm and supervisory initiating device.
   b. Successful operation of each signaling device.
   c. Successful operation of automatic smoke control sequences.
   d. Successful operation of FACP.
   e. Successful operation of FARA.
   f. Successful operation of FARPs.
   g. Successful operation of FCIP.
   h. Successful operation of FTS.
   i. Successful operation of VCS.
   j. Successful operation of elevator recall sequence.
   k. Successful operation of kitchen hood exhaust equipment connections.
   l. Successful operation of line supervision devices.
   m. Successful operation of off-site alarm monitoring system connection.
   n. Successful release of electric door locking hardware and magnetic door holders.

DocuSign Envelope ID: 330DEBD6-9A9E-4F34-BDCC-1AC1BAA701E9

1.8 IDENTIFICATION

A. Provide an identification nameplate for each equipment cabinet. Nameplates shall correspond with labeling identified in the submittal drawings.

B. Fire alarm conduit shall be painted red. As an alternate, conduit shall be permanently labeled “FIRE ALARM” every 30 feet.

C. Fire alarm junction boxes shall be painted red.

D. All field initiating and indicating devices shall be labeled with self-adhesive tape with black lettering and identification labeling according to circuit loop and device address/number.

E. Color code all wiring per recommended standards. Tag all wires in terminal cabinets with tie wrap tags with inked identification.

1.9 SEQUENCE OF OPERATION

A. The system shall operate automatically in accordance with the following table:

DocuSign Envelope ID: 330DEBD6-9A9E-4F34-BDCC-1AC1BAA701E9

FIRE MANAGEMENT SYSTEM SEQUENCE OF OPERATION				
	Manual Pull Station	Area Smoke Detector	Sprinkler Water Flow Switch	Sprinkler Tamper Switch
Annunciate Alarm at FACP and FARP	Yes	Yes	Yes	No
Annunciate Supervisory at FACP and FARP	No	No	No	Yes
Annunciate Circuit Supervision (Trouble) at FACP and FARP	Yes	Yes	Yes	Yes
Activate selected audible and visual signaling device zones	Yes	Yes	Yes	No
Release Magnetic Door Holders	Yes	Yes	Yes	No
Release Electric Door Locking Hardware	Yes	Yes	Yes	No
Transmit Off Site Signal	Yes	Yes	Yes	Yes

DocuSign Envelope ID: 330DEBD6-9A9E-4F34-BDCC-1AC1BAA701E9

B. The VCS shall automatically activate the audible and visual signaling devices in accordance with the Fire Department requirements.

C. Air Handling Systems:
   1. Activation of a supply or return air duct detector shall shut down the associated fan or air handling system.
   2. In the event of an alarm, all components of air handling systems with a total capacity of 2,000 CFM or greater within that zone shall be automatically shut down.

D. Combination Fire/Smoke Dampers:
   1. Activation of a duct detector or area smoke detector at a combination fire/smoke damper shall close the associated fire/smoke damper.

1.10 SYSTEM ZONING

A. Alarm Initiating Devices:
   1. Provide a separate, individual zone for each manual pull station, area smoke detector, duct smoke detector, area heat detector, and sprinkler water flow switch.

B. Supervisory Initiating Devices:
   1. Provide a separate, individual zone for each sprinkler tamper switch.

C. Post Indicator Valve:
   1. System alarm (1 zone per system).
   2. System trouble (1 zone per system).

D. Fire Speakers and Visual Alarm Strobes:
   1. Each floor of the building (above and below grade) shall be a separate, individual zone.
   2. Each exterior area shall be a separate individual zone.

E. Initiating and signaling device wiring circuits/loops/channels shall be loaded to no more than 75 percent capacity to allow for the installation of future devices.

PART 2 - PRODUCTS

2.1 ACCEPTABLE MANUFACTURERS

A. Fire management system components shall be of the same manufacturer.

B. Acceptable manufacturers: match existing.

C. Products for this project shall be of the latest design. Obsolete or discontinued models are not acceptable.

2.2 SYSTEM TYPE

A. The FACP and FARP's shall be connected in a network configuration to become components for a distributed intelligence system. Each FARP shall be capable of performing individual supervision and control on its locally connected devices and shall have the ability to inform the FACP and other FARP's of point status and panel condition.

B. The fire management system shall be the fully addressable type. Each fire alarm initiating device shall be a separate, individual zone. Provide interface modules to connect non-addressable devices to addressable wiring channels.

C. The system shall support a single stand-alone node or can be combined for up to sixty four (64) nodes communicating on a peer-to-peer multi-priority token ring communication network. Loop alarm recognition must be within 750 milliseconds and network alarm response must be under three (3) seconds of a device reporting an alarm state.

D. All zoning/device location information shall be field-programmable to meet the exact job requirements as required by the Fire Department and Fire Marshal.

E. Siemens XLSV, EST 3, Honewell Notifier NFS2-3030, or Simplex 4100U, connected through a token ring network or equal.

DocuSign Envelope ID: 330DEBD6-9A9E-4F34-BDCC-1AC1BAA701E9

2.3 LINE SUPERVISION

A. All system equipment and wiring shall be supervised in compliance with the requirements of NFPA 72.

B. The system must be capable of being wired in a Class A or Class B with non-shielded wire. Disruption or failures of communication between devices and the data controller, or loss of a bus connection, shall result in a signal to the network to identify the alarm condition.

C. Unless otherwise required by the AHJ, wiring classification shall be as follows:
   1. FACP, FARP, and FATC communications wiring: Class A.
   2. Initiating device circuits: Class B.
   3. Notification device circuits: Class B.

D. Where designated for Class A wiring, Class A circuits shall be installed such that the outgoing and return conductors, exiting from and returning to the control unit, respectively, are routed separately. The outgoing and return (redundant) circuit conductors shall not be run in the same cable assembly (multi-conductor cable), enclosure, or raceway.

E. Wiring for initiating and notification circuits must allow the addition of T-taps for Class B wiring.

F. Notification appliance circuits and any other circuits necessary for the operation of the notification appliance circuits shall be protected from the point at which they exit the control unit until the point that they enter the notification zone that they serve using a 2-hour rated cable assembly.

2.4 STANDBY BATTERIES

A. Provide sufficient battery capacity to operate the entire system upon loss of power as required by NFPA 72. The on-site emergency power system shall not be used when sizing the battery supply.

B. The system shall automatically transfer to the standby batteries upon power failure. Battery charging and recharging shall be automatic.

2.5 FIRE ALARM CONTROL PANEL (FACP)

A. Solid state, microprocessor based, modular design, fully supervised. Steel enclosure in standard finish, with hinged, locking door. Integral network interface modules, power supply, standby batteries, and battery charger. Wall mount in FCC.

B. Provide power on LED, power failure LED, system trouble LED, system reset switch, alarm silence switch, trouble silence switch, manual evacuations switch, alarm acknowledge switch, trouble acknowledge switch, supervisory service acknowledge switch, lamp test button, tone alert, battery supervision LED, auxiliary relays, and other system indicators and controls necessary for processing alarm and signaling functions. Indicating lamps shall be LED type.

C. Provide appropriate permanent identification labeling of control and indicating functions.

D. Annunciation:
   1. Serial annunciator with back lit, alphanumeric, 168-character liquid crystal display indicating clear language information as to the type of alarm (device type), point status (alarm or trouble), number of alarms on the system, and a custom location label. Ability to scroll back through prior system actions, with events automatically placed in easy to access queues for viewing specific event types separately.
   2. LED matrix annunciator indicating initiating device type (columns) and floor of initiating device (rows). Provide a separate row for each floor level and a separate column for each device type (manual pull station, area smoke detector, duct smoke detector, sprinkler water flow, and sprinkler valve tamper). Labeling shall be modifiable to customize the designation of all LED's and switches. Provide a red (alarm or trouble) and yellow (zone supervision) light for each annunciation zone. Provide matrix layout, identification, and zoning requirements that meet the requirements of the Fire Department.
   3. Include RS 232 port for printer connection.
   4. Stand-alone workstation computer complete with software and hardware for user interface.
   5. Provide a permanent binder with typewritten, laminated inserts cross-referencing location labels to the description and location of system address.

DocuSign Envelope ID: 330DEBD6-9A9E-4F34-BDCC-1AC1BAA701E9

E. System shall utilize analog type smoke detection with alarm verification, self-test feature, individual sensor automatic timed sensitivity adjustment, individual smoke sensor field adjustable sensitivity set from FACP, and automatic maintenance alarm feature.

F. GE EST 2, or equal.

2.6 FIRE ALARM REMOTE PANELS (FARP)

A. FARP's shall be independent fire alarm systems for distributed processing and special purpose applications. Provide FARP's for distributed processing of fire management system functions.

B. Solid state, microprocessor based, modular design, fully supervised. Steel enclosure in standard finish, with hinged, locking door. Integral power supply, standby batteries, and battery charger.

C. Provide power on LED, power failure LED, system trouble LED, system reset switch, alarm silence switch, trouble silence switch, alarm acknowledge switch, trouble acknowledge switch, supervisory service acknowledge switch, lamp test button, tone alert, battery supervision LED, auxiliary relays, and other system indicators and controls necessary for processing alarm and signaling functions. Indicating lamps shall be LED type.

D. Provide appropriate permanent identification labeling of control and indicating functions.

E. LED annunciation of alarm and supervisory zones. Provide a red (alarm or trouble) and yellow (zone supervision) light for each annunciation zone.

F. Siemens Firefinder XLSV through an X-Net network, EST3 connected through an EST3 network, Simplex 4100U connected through a Simplex 4120 network, or equal.

2.7 FIRE ALARM TERMINAL CABINETS (FATC)

A. Steel enclosure in standard finish, hinged locking door, fire-retardant plywood backboard, and coded terminal blocks.

B. Provide appropriate permanent identification labeling of control and indicating functions.

2.8 PRINTER

A. Provide a high impact tabletop laser printer in the Fire Command Center.
   1. Siemens, PAL-1, EST PT series, Simplex 4190-9013, or equal.

2.9 FIRE ALARM INITIATING DEVICES

A. General:
   1. Addressable type.
   2. Provide auxiliary relays where required to satisfy system operational requirements.
   3. Smoke detectors shall be analog type.

B. Manual Pull Stations:
   1. High impact Lexan polycarbonate or die cast metal.
   2. Push type, double action, mechanically latched upon operation until key-operated manual reset. Pull station front shall be hinged to back plate assembly, requiring keyed opening to reset.
   3. Provide protective shields for manual pull stations located in public areas. Tamper-proof, clear Lexan shield, with warning horn and integral 9-volt battery.
   4. Siemens HMS_D, or equal.

C. Area Smoke and Heat Detectors:
   1. General:
      a. Common base for detachable detector heads.
      b. Intelligent detectors with integral microprocessor, non-volatile memory, automatic device mapping, electronic addressing, environmental compensation and red/green status LED's.
      c. Provide relay bases where required for detectors with local device/accessory interface.
   2. Photoelectric thermal type area smoke detector:
      a. Smoke and heat alarm filtering and validation.
      b. Thermal sensor.

DocuSign Envelope ID: 330DEBD6-9A9E-4F34-BDCC-1AC1BAA701E9

c. Siemens HFP-11 with DB-11 base, or equal.

3. Photoelectric type area smoke detector:
   a. Smoke sensing and digital filtering for alarm validation.
   b. Adjustable sensitivity.
   c. Siemens HFP-11 with DB-11 base, or equal.
4. Area heat detector:
   a. 135-degrees fixed temperature self-restoring type.
   b. Siemens HFPT-11 with DB-11 base, or equal.

D. Remote alarm indicator:
   1. Ceiling mounted, red LED, stainless steel faceplate engraved ALARM. Provide where area detectors or duct type smoke detectors are installed above a ceiling.
   2. Siemens TSM-1, or equal.

E. Addressable Transmitters/Monitor Modules:
   1. Addressable transmitters/monitor modules shall be provided where required to interface with contact alarm devices.
   2. Siemens HTRI-D/S, or equal.

F. Addressable Relay Modules:
   1. Addressable relay modules shall be provided where required to provide audible alarm interface and/or relay control interface.
   2. Siemens HTRI-R, or equal.

2.10 VOICE COMMUNICATION SYSTEM (VCS)

A. One-way voice paging and fire alarm evacuation signal between the FCC and alarm signaling devices. Provide a distributed amplification system integrated into the FACP and FARP's. Multi-channel type to permit simultaneous paging to selected speaker zones while fire alarm evacuation signal is being transmitted to other speaker zones. Amplifiers and visual alarm power supplies shall be sized to support full coverage of all areas of the building plus 75 percent spare. Provide additional space in each cabinet for a minimum of 20 percent modular expansion of amplification capacity.

B. Selective zone paging to all or any combination of speaker zones. Automatic or manual selection of speaker zones shall activate a red LED for the activated speaker zones.

C. Fire tone LED shall indicate fire alarm evacuation signal is being transmitted.

D. Fire tone switch shall initiate the fire alarm evacuation signal.

E. Silence LED shall indicate alarm evacuation signal has been silenced.

F. Silence switch shall silence the fire alarm evacuation signal. Time delay to self-restore to current system condition.

G. Each speaker zone shall have a manual selection switch, red LED to indicate active zone, and yellow LED to indicate speaker zone trouble.

H. ALL-CALL switch shall activate all speaker zones.

I. Acknowledge switch, system trouble, reset, and lamp test switch.

J. Hand-held microphone with push-to-talk switch for voice paging. The microphone shall have priority over pre-recorded messages and the fire alarm evacuation signal. The microphone shall be noise canceling type with frequency response of 200 to 4000 Hz.

K. Provide a remote paging handset in panel faceplate ready for console mounting.

L. The fire alarm evacuation signal shall be an alarm tone or pre-recorded message as required by the Fire Department. Failure of the primary tone generator shall result in a trouble signal and automatic switchover to a backup tone generator.

M. Pre-amplifiers shall be solid state type, arranged in modular units so that failure of a primary pre-amplifier unit shall result in a trouble signal and automatic switchover to a backup pre-amplifier unit.

DocuSign Envelope ID: 330DEBD6-9A9E-4F34-BDCC-1AC1BAA701E9

N. Amplifier modules shall be supervised such that a loss or reduction of signal shall result in a trouble condition. Amplifiers shall be rated for continuous maximum power output for 24 hours minimum. System frequency response shall be plus or minus 3 dB from 100 Hz to 6 kHz.

O. Amplifiers shall be solid state type, arranged in modular units so that failure of a primary amplifier shall result in a trouble signal and automatic switchover to a backup amplifier unit.

P. Visual alarm strobes shall be synchronized throughout the building. The candela rating of visual alarm strobes shall be in accordance with NFPA 72 requirements. Provide visual alarm strobes in addition to those shown on the Drawings to meet NFPA 72 requirements.

Q. Signaling Devices:
   1. Speakers:
      a. Flush ceiling- or wall-mounted as shown on the Drawings, 4-inch cone, perforated faceplate in baked white enamel finish, fire retardant, moisture resistant, frequency response 400 Hz to 4000 Hz, taps at ¼, ½, 1 and 2 watts, UL 1480.
      b. Ceiling mounted: Siemens SEF-CW, or equal.
      c. Wall mounted: Siemens SEF-W, or equal.
   2. Visual Alarms:
      a. Flush wall-mounted, high intensity strobe, vertical orientation with vertical engravement FIRE, white faceplate, ADA, UL 464.
      b. Wall mounted: Siemens ZR-MC-W, or equal.
   3. Combination Speaker/Visual Alarm:
      a. Flush mounted with 4-inch cone speaker, perforated faceplate in baked white enamel finish, fire retardant, moisture resistant, frequency response 400 Hz to 4000 Hz, taps at ¼, ½, 1, and 2 watts, UL 1480. High intensity strobe, vertical orientation with vertical engravement FIRE, ADA, UL 464.
      b. Siemens SEF-MC-W, or equal.
      c. Ceiling Mounted: White housing with red “FIRE” letters, low profile, varying candela and wattage ratings.

R. For exterior locations, covered and open parking garages and other locations where ambient conditions are not suitable for proper operation of notification appliances, provide weather-proof devices with appropriate back boxes.

S. Strobes may be combined with speakers where shown on the Drawings.

PART 3 - EXECUTION

3.1 GENERAL

A. All equipment shall be installed and connected in accordance with the manufacturer’s recommendations.

B. Wiring shall be color coded, and in accordance with the manufacturer’s recommendations, NEC, and Fire Department requirements. Install wiring in an independent, dedicated metallic raceway system.

C. Connections to devices installed in accessible tile ceilings shall be in flexible conduit. Device back boxes shall be securely attached to framing members.

D. Provide appropriately sized back boxes for surface-mounted fire alarm signaling devices, paint to match device faceplate color. Stacked or punch pressed steel type back boxes are not permitted.

E. Provide water-tight type back boxes where installed recessed flush in perimeter walls below grade.

F. Provide wireways above and/or below equipment cabinets to accommodate large concentrations of wiring. Conductors within equipment cabinets shall be carefully formed and harnessed.

G. Provide power supply wiring to electric damper actuators used for smoke control that are not controlled by the temperature control system.

H. Area and duct-type smoke detectors shall be photoelectric type, unless otherwise specified or shown on the Drawings.

DocuSign Envelope ID: 330DEBD6-9A9E-4F34-BDCC-1AC1BAA701E9

I. Provide a 1-inch empty conduit from the FACP to the nearest telecom terminal backboard. Connect the fire alarm control panel communications modem to dedicated telephone lines per the requirements of the AHJ.

J. Provide a 1-inch empty conduit from the FACP to the security system control panel.

K. Provide a signal to the lighting control system to override lighting to full brightness upon activation of fire alarm.

L. Auxiliary relays connected to the fire management system used to initiate control of monitor status of fire safety functions shall be located within 3 feet of the controlled circuit or device. The wiring between the fire management system and the auxiliary relay shall be supervised.

M. Provide additional alarm and annunciation devices as required by the AHJ within the spare device allowances noted. Include conduit, wire and testing as part of this scope of work.

N. All magnetic hold-open doors shown on the architectural drawings shall be provided with a 120V, 1-phase circuit and a dedicated smoke detector.

O. All combination fire/smoke detectors shown on the mechanical drawings shall be provided with a 120V, 1-phase circuit and a duct smoke detector.

3.2 DEVICE MOUNTING

A. Unless otherwise noted on the Drawings, plans, specifications, manufacturer's recommendations, or by the AHJ, the recommended mounting heights and requirements are as follows:

1. Control Panel:
   a. Fire Alarm control panel and remote panels and their components shall be mounted so that no part of the enclosing cabinet is less than 12 inches or more than 78 inches above the finished floor. All manually operable controls shall be at least three feet and less than five feet above the finished floor. Panel shall be installed to comply with the requirements of UL 864. The LCD display for the control panel shall be mounted at centerline 5 feet-6 inches above the finished floor.
2. Detectors:
   a. Detectors shall be mounted on the ceiling not less than 4 inches [100 millimeters] from the side wall to the near edge, or if side wall, between 4 inches [100 millimeters] and 12 inches [300 millimeters] down from the ceiling to the top of the detector.
   b. Smoke detectors shall be located at least three feet from supply or return air diffusers.
   c. Smoke detectors shall be located on either side within five feet from any opening with a magnetic door holder or a motorized coiling door within a fire-rated partition unless specifically accepted by NFPA 72 or the AHJ.
   d. Smoke detector shall be mounted at the highest point on the ceiling.
   e. Provide area or duct smoke detectors as required for activation of all fire/smoke dampers.
   f. Residential smoke detectors shall be provided in each sleeping area and in common space directly outside of each sleeping area.
3. Visual Signal Appliances (Non-Sleeping Areas):
   a. Visual signal appliances shall be wall-mounted at 80 inches [2,030 millimeters] above the finished floor or 6 inches [152 millimeters] below the ceiling, whichever is lower. For purposes of installation, the bottom of the visual portion or lens of the fixture shall be used for mounting reference.
   b. Visual signal appliances may be installed on the ceiling, but must be listed for ceiling mount. Ceiling-mounted appliances shall be in accordance with the requirements of NFPA 72.
4. Visual Signal Appliances (Sleeping Areas):
   a. Visual signal appliances in accessible sleeping rooms shall be wall-mounted no less than 24 inches below the ceiling to the top of the lens and shall be in accordance with NFPA 72. The visual appliance shall be no more than 16 feet from the pillow. Minimum candela rating shall be 110 cd.
5. Audible Signal Appliances:

DocuSign Envelope ID: 330DEBD6-9A9E-4F34-BDCC-1AC1BAA701E9

a. Where ceiling heights permit, wall-mounted appliances shall have their tops at 90 inches [2,300 millimeters] above the finished floor or 6 inches [152 millimeters] below the ceiling.

6. Combination Audible and Visual Signal Appliances:
   a. The location of audible/visual signal appliances shall comply with visual signal appliance mounting requirements.
   b. Ceiling-mounted appliances shall be in accordance with the requirements of NFPA 72.
7. End of Line (EOL) Resistors shall be mounted in accessible areas.
8. Duct-mounted smoke detectors shall be provided where indicated on the supply and return side of all air-handling units with system CFM rating equal or greater than 2,000 CFM.
9. Only designated speakers, strobes, and telephones shall be surface-mounted. All surface-mounted devices shall be smooth sided, without knockouts and painted red. Use of standard electrical boxes for surface-mounted equipment is prohibited.
10. Point-addressable monitor modules and control modules shall be securely mounted in back boxes or mounted on rails within a larger enclosure. The use of wire nuts to make connections to these modules is strictly prohibited.
11. All panels visible to the public or noted on the Drawings shall be finished as directed by the Architect.

B. Device Spacing:
   1. Corridor speakers shall be spaced not greater than [60 feet on center. All other speakers whether combined with strobes or not shall be spaced as shown on the Drawings.
   2. Corridor strobes shall be spaced not greater than 100 feet on center and no more than 15 feet from each end of the corridor in accordance with NFPA 72.
   3. Spot type smoke detectors installed in rooms shall be spaced not greater than 15 feet from a wall and not greater than 30 feet on center. Corridor smoke detectors spacing shall be no greater than that shown in NFPA 72.

C. Lightning Arrestors:
   1. Provide lightning over-voltage protectors on any circuit that contains devices or appliances located on the exterior of the building.
   2. The over-voltage protectors shall mount in dedicated metallic electrical boxes as close as possible to the location where the circuits exit the building.

3.3 TEST/FIELD QUALITY CONTROL

A. A complete system pre-test shall be performed by the installing contractors before the final system acceptance test. All deficiencies shall be corrected. Upon successful completion of the pre-test, a complete pre-test report shall be submitted to the Owner's Representative to document that the fire alarm system is operating properly, along with an NFPA 72, Fire Alarm System Record of Completion document. These documents shall be received before scheduling a final test with the fire department representative or designated testing AHJ.

B. The final alarm acceptance test shall be coordinated with the Owner's Representative, and the local Fire Department representative or testing authority. A letter certifying that the installation is complete and fully operational shall be forwarded to the Owner's Representative.

C. Before final acceptance of the project can be made, the Contractor must submit from NFPA 72, the Fire Alarm System Record of Completion, signed by a factory-certified technician, certifying that the fire alarm system has been installed, tested and will function in accordance with the manufacturer's specifications and the Fire Marshal requirements. The installing contractor shall also issue a letter to the Owner's Representative indicating the fire alarm system has been installed and tested to operate according to the design drawings and specifications.

D. Monitoring:
   1. The Contractor shall provide monitoring services for the facility for one (1) year after the acceptance of the contract.
   2. The services shall include a toll-free telephone line connecting to the 24-hour on call monitoring station.

DocuSign Envelope ID: 330DEBD6-9A9E-4F34-BDCC-1AC1BAA701E9

3. Monitoring station shall contact designated site representative in the event of alarm and dispatch an immediate on-site response to the alarm location if the site representative cannot be reached or verification of the cause of the alarm cannot be determined.
4. Monitoring services after the first year will be handled by the Department.

END OF SECTION

DocuSign Envelope ID: 330DEBD6-9A9E-4F34-BDCC-1AC1BAA701E9

SECTION 99-310000
EARTHWORK

PART 1 - GENERAL

1.1 SECTION INCLUDES:

A. Staking and grades
B. Existing utilities
C. Earthwork general requirements
D. Subsurface extraction
E. Rough grading and filling
F. Excavation
G. Embankment construction
H. Subgrade preparation
I. Foundation preparation
J. Subgrade filling/raising grade
K. Compaction
L. Backfilling
M. Finish grading
N. Field quality control

1.2 RELATED SECTIONS

A. GC-35 Temporary Construction Facilities and Utilities
B. Section 99-024100, Demolition
C. Section 99-321123, Aggregate Base Course
D. Section 99-330528, Trenching and Backfilling for Utilities

1.3 REFERENCES

A. American Society for Testing and Materials (ASTM):

1.	ASTM C131	Test Method for Resistance to Degradation of Small-Size Coarse Aggregate by Abrasion and Impact in the Los Angeles Machine
2.	ASTM C136	Test Method for Sieve Analysis of Fine and Coarse Aggregates
3.	ASTM C535	Test Method for Resistance to Degradation of Large-Size Coarse Aggregate by Abrasion and Impact in the Los Angeles Machine
4.	ASTM D422	Method for Particle-Size Analysis of Soils
5.	ASTN D653	Terminology Related to Soil, Rods, and Contained Fluids
6.	ASTM D1140	Test Method for Amount of Material in Soils Finer Than the 200 (75 um) Sieve
7.	ASTM D1557	Test Methods for Moisture-Density Relations of Soils and Soil-Aggregate Mixtures Using 10-lb (4.54-kg) Rammer and 18-in. (457-mm) Drop
8.	ASTM D2216	Test Method for Laboratory Determination of Water (Moisture) Content of Soil, Rock, and Soil-Aggregate Mixtures.
9.	ASTM D2487	Test Method for Classification of Soils for Engineering Purposes
10.	ASTM D2922	Test Methods for Density of Soil and Soil-Aggregate in Place by Nuclear Methods (Shallow Depth)
11.	ASTM D2974	Test Method for Moisture, Ash, and Organic Matter of Peat and Other

DocuSign Envelope ID: 330DEBD6-9A9E-4F34-BDCC-1AC1BAA701E9

		Organic Materials
12.	ASTM D3017	Test Method for Moisture Content of Soil and Soil-Aggregate in Place by Nuclear Methods (Shallow Depth)
13.	ASTM D4253	Test Methods for Maximum Index Density of Soils Using a Vibratory Table
14.	ASTM D4254	Test Methods for Minimum Index Density of Soils and Calculation of Relative Density
15.	ASTM D4318	Test Method for Liquid Limit, Plastic Limit, and Plasticity Index of Soils

B. State of California, Department of Transportation (Caltrans), Standard Test Methods:
   1. Calif. Test 217 Method of Test for Sand Equivalent

1.4 DEFINITIONS

A. Earthwork Terminology: Terms used in this Section and not defined herein shall be interpreted in accordance with the definitions given in ASTM D653.

B. Soil Classification: Soil classification is based on the Unified Soil Classification system given in ASTM D2487. Group symbols, when used, conform with the symbols of ASTM D2487.

C. Fill: Soil or soil-rock material placed to raise the subgrade or natural grade of the site.

D. Backfill: Soil or soil-rock material used to backfill excavations and to backfill excavated spaces around foundation walls, building walls, retaining walls, head walls, and abutments.

E. Embankment: Soil or soil-rock material for embankment construction. Embankment construction includes constructing embankments and dikes, including the preparation of the areas upon which they are to be placed; and the construction of temporary surcharge embankment above the grading plane.

F. Borrow: Soil or soil-rock material used for fill, backfill, embankment, or other construction that is excavated from an off-site location and hauled in.

G. Unsuitable Material: Excavated material or material below the natural ground surface in embankment areas or below sub grade elevation in excavated areas, which is unsuitable for its planned use. Unsuitable material is further defined as material determined to be:
   1. Of such unstable nature as to be incapable of being compacted to specified density using ordinary methods at optimum moisture content; or
   2. Too wet to be properly compacted and circumstances prevent suitable drying prior to incorporation into the work; or
   3. Otherwise unsuitable for the planned use.
      The presence of excessive moisture in a material is not, by itself, sufficient cause for determining that the material is unsuitable. The existence of unsuitable material may be indicated in the Contract Documents or may be determined by the Engineer during the progress of the work.

H. Relative Compaction: The ratio, expressed as a percentage, of the in-place dry density of material as compacted in the field to the maximum dry density of the same material as determined by laboratory test ASTM D1557.

I. Optimum Moisture Content: The water content at which a soil can be compacted to a maximum dry unit weight by a given compactive effort.

J. Relative Density: Mass per unit volume as specified in ASTM D4253 and ASTM D4254, as applicable to the soil and test method employed.

1.5 CLASSIFICATION OF EARTHWORK

A. For specification purposes, earthwork shall be classified as follows:

DocuSign Envelope ID: 330DEBD6-9A9E-4F34-BDCC-1AC1BAA701E9

1. Excavation-Common: All excavation involved in grading and construction of the trackway, parking areas, landscaped areas, walkways, roads, driveways, and connections thereto; and any other excavation classified or indicated as common excavation. Demolition of the existing concrete and asphalt concrete pavements within the excavation-common prism will be paid separately as indicated elsewhere in this technical specification.
2. Structure Excavation: The removal of material for the construction of foundations for aerial structures, buildings, retaining walls and other structures, and such other excavation indicated as structure excavation.
3. Structure Backfill: Structure backfill includes furnishing structural fill material, and placing and compacting structural fill material around structures to the lines and grades indicated. Structure backfill includes borrow excavation and material when required.
4. Pervious Backfill: Includes furnishing, placing, and compacting pervious backfill material behind abutments, wingwalls, and retaining walls, as indicated.
5. Common Embankment: Used only for embankment construction, above surrounding grade, below 2.5 feet of the finished embankment grade or sub grade, and where there are no foundation-bearing concrete structures above. Common embankment includes borrow excavation material when required.
6. Select Embankment: Used only for embankment construction, above surrounding grade, within 2.5 feet of the finished embankment grade or sub grade. Select embankment includes borrow excavation material when required.
7. Subsurface Extraction: Includes removal of abandoned utilities, tanks, walls, foundations, and other miscellaneous subsurface man-made structures that interfere with new construction and are designated to be removed, and the cleaning of such items if they are indicated to be salvaged. Removal of such obstructions at or above grade is specified in Section 99-024100, Demolition.
8. Salvaging Topsoil: Salvaging topsoil is the removal of topsoil to the depth indicated, stockpiling the material on-site, and maintaining the stockpile until the material is reused in the work. Salvaging of topsoil shall be classified the same as the excavation with which it is associated, but if no such classification can be made, it shall be classified as Excavation - Common.

1.6 DESCRIPTION

A. Provide excavation for pavement; excavation and placement of compacted fill and backfill for structures, subsurface and surface drainage; placement of pervious backfill; construction of embankments; sub grade and foundation preparation; subsurface extraction of miscellaneous structures and facilities indicated or required to be removed; and finish grading.

1.7 SUBMITTALS

A. General: Refer to Section GC-43 - Shop Drawings, Product Data, and Samples, for submittal requirements and procedures.

B. Quality Plan: Refer to Section SC-33 Quality Assurance Program. The Quality Plan shall include a schedule of all tests specified to be performed by the Contractor.

C. Test Reports: Submit certified test reports of all tests specified to be performed by the Contractor. Test reports shall be sealed and signed by a California registered geotechnical engineer when required to meet requirements of the California Building Code, Chapter 33, and Appendix Chapter 33, and Structural Chapters 18 and 18A.

D. Samples: Furnish and deliver samples of fill and backfill materials as selected by the Engineer for testing and analysis.

DocuSign Envelope ID: 330DEBD6-9A9E-4F34-BDCC-1AC1BAA701E9

E. Delivery Tickets: Submit a delivery ticket with each load of imported borrow material delivered to the site, stating the type of fill material and the quantity.

F. Field Verification for In-Situ Treatment: Submit the proposed program for field verification of Standard Penetration Test "N" Values after in-situ treatment for mitigation of liquefaction potential.

1.8 REGULATORY REQUIREMENTS

A. Regulatory requirements that govern the work of this Section include the following governing codes:
   1. California Code of Regulations, Title 8, Chapter 4, Subchapter 4 — Construction Safety Orders, and Subchapter 19 — Trench Construction Safety Orders.
   2. California Code of Regulations, Title 24, Part 2, California Building Code, Chapter 33 and Appendix Chapter 33, and Structural Chapters 18 and 18A.

1.9 QUALITY CONTROL

A. Quality Plan: The Contractor shall submit a Quality Plan, conforming to the requirements of Section SC-33 Quality Assurance Program, covering all earthwork operations and the field quality control to be performed by the Contractor.

B. Quality Control: The Contractor shall provide proper quality control measures to assure compliance with specified requirements. Foundation and sub grade preparation and the placement and compaction of fills shall be performed under the surveillance of a California registered geotechnical engineer employed by the Contractor, as required to comply with the California Building Code, Chapter 33 and Appendix Chapter 33 and Chapters 18 and 18A.

C. Tests: The Contractor shall engage the services of an approved independent soils testing laboratory to perform tests.

D. Tolerances:
   1. Construct finished surfaces to plus or minus 1/2-inch of the elevations indicated.
   2. Complete embankment slopes to plus or minus 6 inches of the slope line indicated.
   3. Maintain the moisture content of fill material as it is being placed within plus or minus two percent of the recommended moisture content of the material.

1.10 SITE CONDITIONS

A. Unfavorable Weather Conditions:
   1. Excavating, filling, backfilling, and grading work shall not be performed during weather conditions which might damage or be detrimental to the condition of existing ground, in-progress work, or completed work. When the work is interrupted by rain, excavating, filling, backfilling, and grading work shall not resume until the site and soil condition (moisture content) are suitable for compaction.
   2. Sub grade shall be free from mud, snow, ice, and deleterious material when work is resumed.
   3. Soil material that is too wet for compaction shall be left to drain, to be aerated and dried by disking and harrowing or other approved methods until the moisture content of the area is uniform and within the specified limits.

B. Prevention of Erosion: Comply with requirements specified in Section GC-35 Temporary Construction Facilities and Utilities as well as:
   1. Prevent erosion of stockpiles, ditches, embankments, filled, backfilled, and graded areas until such time as permanent drainage and erosion control measures have been installed.
   2. Perform "protective grading" to provide positive drainage and to minimize ponding of surface water.

DocuSign Envelope ID: 330DEBD6-9A9E-4F34-BDCC-1AC1BAA701E9

PART 2 - PRODUCTS

2.1 FILL AND BACKFILL MATERIALS - GENERAL REQUIREMENTS

A. Material used for fill, backfill, and embankment construction shall be an inert, inorganic soil, free from deleterious substances and of such quality that it will compact thoroughly without the presence of voids when watered and rolled. (Inorganic soil is defined as soil containing less than two percent by weight of organic material when tested in accordance with ASTM D2974. Excavated on-site material will be considered suitable for fill, backfill, and embankment construction if it is free from organic matter and other deleterious substances and conforms to the requirements specified herein.

B. Excavated material that is suitable for fill, backfill, and embankment construction shall be conditioned for reuse and properly stockpiled for later filling and backfilling operations. Conditioning shall consist of spreading material in layers not to exceed 8 inches and raking free of debris and rubble. Rocks exceeding 6 inches in largest dimension and deleterious material shall be removed from the site and disposed of as specified herein under Article 3.03G, Disposal of Surplus Material.

C. Where conditions require the importing of fill or backfill material, the material shall be an inert soil or soil-rock material free of organic matter and meeting or exceeding the minimum requirements specified herein for the location.

D. All material to be used for filling, backfilling, and embankment construction requires written approval of the Engineer.

2.2 FILL AND BACKFILL MATERIALS - SPECIFIC REQUIREMENTS

A. Common Fill: Well-to moderately well-graded soils consisting of sands, silts, and clays, with or without gravel, as excavated, screened or blended, having the following mechanical properties and gradation:

1. Gradation (ASTM D422):

Sieve Opening	Percent Passing, by Weight	
6-inch square	100	
3/4-inch square	70	minimum

2. Liquid Limit (ASTM D4318): 50 maximum
3. Plasticity Index (ASTM D4318): 25 maximum

B. Common Embankment: Common fill, with the following additional requirements:

1. Liquid Limit (ASTM D4318): 40 maximum
2. Plasticity Index (ASTM D4318): 15 maximum

C. Select Embankment: Well-to moderately-graded soils consisting of sands, silts, and clays, with or without gravel, as excavated, screened or blended, having the following mechanical properties and gradation:

1. Gradation (ASTM D422):

Sieve Opening	Percent Passing, by Weight	
1 inch square	100	
3/8 inch square	75	minimum
U.S. No. 4	20	minimum
U.S. No. 200	35	maximum

2. Sand Equivalent (Calif. Test 217): 10 minimum

DocuSign Envelope ID: 330DEBD6-9A9E-4F34-BDCC-1AC1BAA701E9

3. Plasticity Index (ASTM D4318): 10 maximum

2.3 SOURCE QUALITY CONTROL

A. Fill, backfill, and embankment materials proposed to be used in the work shall be tested in the laboratory for compliance with specified requirements as follows:
   1. Moisture-Density Relationship: ASTM D1557.
   2. Moisture Content: ASTM D2216.
   3. Liquid Limit: ASTM D4318.
   4. Plastic Limit and Plasticity Index: ASTM D4318.
   5. Percentage of Wear: ASTM C131 or C535 as applicable.
   6. Sieve Analysis: ASTM D422, and ASTM C136, as applicable.
   7. Percent Passing No. 200 sieve: ASTM D1140.
   8. Sand Equivalent: California Test 217.
   9. Organic Content of Soils: ASTM D2974.

B. Where classification of soils is necessary to meet specified requirements, perform laboratory tests in accordance with ASTM D2487.

C. Submit certified test reports of all tests as herein specified under Submittals.

D. Provide samples as requested by the Engineer for preparing checklists. Provide three samples of each type of material proposed for use from locations selected by the Engineer.

PART 3 - EXECUTION

3.1 STAKING AND GRADES

A. Lay out the work, establish all necessary markers, bench marks, grading stakes, and other stakes as required.

3.2 EXISTING UTILITIES

A. Verify on site the location and depth (elevation) of all existing utilities and services before performing any excavation work. Refer to Section 99-330525, Support and Protection of Utilities, for additional requirements. Excavation within 3 feet of an active utility line shall be performed by hand.

B. Abandoned sewers, piping, and other utilities encountered in the progress of the excavating shall be removed and the ends plugged.

C. Active utility lines encountered, which are not indicated in the Contract Documents, shall be reported immediately to the Engineer and utility owners involved. The Engineer and utility owners shall be permitted free access to determine the measures deemed necessary to repair, relocate, or remove the utility.

3.3 EARTHWORK GENERAL REQUIREMENTS

A. Earthwork shall conform to the provisions in Section 19, "Earthwork," of the Standard Specifications and these special provisions.

B. Surplus excavated material shall become the property of the Contractor and shall be disposed of in conformance with the provisions in Section 14, “Environmental Stewardship,” of the Standard Specifications.

C. Dust Control: Refer to Section GC-35 Temporary Construction Facilities and Utilities, for dust control requirements.

DocuSign Envelope ID: 330DEBD6-9A9E-4F34-BDCC-1AC1BAA701E9

D. Erosion Protection: Prevent erosion of the site at all times. Construct temporary berms and dikes and cut temporary swales to promote natural drainage of site.

E. Construction Traffic: Disperse travel paths of traffic and construction equipment over entire width of compacted surfaces so as to aid in obtaining uniform compaction. Protect exposed soil layers with high moisture content from excessive wheel loads.

F. On-Site Excavation or Borrow Pits: Do not excavate or remove any material from the project site or right-of-way which is not within the designated excavation, as indicated by the slope and grade lines, without written authorization from the Engineer.

G. Salvaging Topsoil:
   1. Salvage topsoil from stripped and excavated areas, and stockpile on the site at appropriate locations. Prevent topsoil from contamination by other materials, and provide adequate drainage and erosion protection.
   2. Place stockpiled topsoil in areas to be landscaped as indicated on the Contract Drawings.

H. Stockpiling of Fill and Backfill Material:
   1. Excavate and separately stockpile suitable fill and backfill material, as indicated, during the progress of the excavation work. Save sufficient suitable excavated material, if available, for later filling, backfilling, and embankment construction.
   2. Store materials from required excavations that are suitable for fill, backfill, and embankment as excavated, in stockpiles segregated by type.
   3. Establish excavated material stockpiles on site only in locations where they will not interfere with the progress of the work. Offsite stockpiling, if necessary, shall be the responsibility of the Contractor.

I. Disposal of Surplus Material:
   1. Excess earth materials, unsuitable materials, and debris shall become the property of the Contractor and shall be removed from the site and disposed of in a legal manner.
   2. Location of disposal site and length of haul shall be the Contractor's responsibility.

J. Maintenance of Excavations, Slopes, and Embankments:
   1. Excavate and remove material outside the limits of the excavation which is unstable and constitutes potential slides, and material which comes into excavations for any reason including from the driving of piles.
   2. Maintain slopes and embankments until acceptance of the work. Promptly repair slides, slipouts, washouts, settlements, and subsidences that occur for any reason, and refinish the slope or embankment to the indicated lines and grades.

3.4 SUBSURFACE EXTRACTION

A. Remove subsurface facilities and obstructions to the extent indicated.

B. When subsurface facilities are encountered during excavations which interfere with new construction, and such facilities are not indicated, notify the Engineer promptly for corrective determination.

3.5 ROUGH GRADING AND FILLING

A. Prior to commencement of earthwork, perform such soil and rock removal and filling as may be required to facilitate the progress of the work and bring all elevations to the rough grading lines indicated on the Contract Drawings. Grading shall be performed by blading or as herein specified under Article 3.08, Subgrade Preparation.

B. Fill or backfill, test pits, or holes which will not be completely removed by excavation, with lean concrete, pervious backfill, or clean structural fill, and compact as herein specified in layers not exceeding 8 inches in uncompacted thickness.

DocuSign Envelope ID: 330DEBD6-9A9E-4F34-BDCC-1AC1BAA701E9

C. Fill or backfill holes, swales, and low points that will not otherwise be removed in the course of the work to the indicated grades.

3.6 EXCAVATION

A. General Excavation Requirements:

1. Perform excavating as indicated and required for trackway and roadway beds, for concrete footings, foundations, retaining walls, exterior paving, floor slabs, concrete walks, and for site levels and grading, and provide shoring, bracing, underpinning, cribbing, pumping, and planking as required.
2. Comply with applicable requirements of CCR, Title 8, Trench Construction Safety Orders.
3. The bottoms of excavations shall be level, firm, undisturbed earth, clean and free from loose material, debris, and foreign matter.
4. Excavate to the lines and grades indicated on the Contract Drawings.
5. Limits of excavations shall allow for adequate working space for installing forms, wall waterproofing, and as required for safety of personnel. Cut excavations in solid rock accurately to the lines indicated on the Contract Drawings, or to the width of the ductbank or concrete encasement.
6. Remove unstable bottom material. Remove large stones, debris, and compressible soils from excavation bottoms to a minimum depth of 12 inches. Where required to excavate to rock, it shall be understood to mean sound bedrock. Remove loose and unsound material.
7. Except as otherwise indicated, preserve the material below and beyond the lines of excavations. Where an excavation is carried below the indicated grade, backfill to the indicated grade as herein specified.
8. Excavations for convenience of the Contractor shall be approved by the Engineer.
9. Place excavated material at a sufficient distance from edge of excavation so as not to cause cave-ins or bank slides, but in no case closer than 3 feet from the edge of excavations.
10. Unauthorized over excavations for footings and foundations shall be filled with lean concrete to indicated elevations.
11. Excavated earth material that is suitable for fill, backfill, or embankment shall be conditioned for re-use and properly stockpiled for later filling and backfilling operations as herein specified. Test, screen, and mix as necessary to meet specified requirements.

3.7 EMBANKMENT CONSTRUCTION

A. Construct embankments to lines, grades, and contours indicated, in layers as nearly uniform and horizontal as is consistent with the indicated finished contour and profile. Maximum thickness of the layers shall be 8 inches before compaction.

B. Compact each layer to specified density for entire width of the embankment. Achieve required compaction by rolling with compaction equipment suitable for type and condition of the particular material. Roll in a longitudinal direction parallel to longest dimension, starting at outer edges and progressing toward the center.

C. Moisture-condition embankment fill material as required to achieve its compaction to the specified density, within the tolerances specified herein.

D. Do not compact material that contains excessive moisture. In such cases, scarify to the full depth of the layer having excessive moisture content and dry by reworking, mixing with dry materials, or other approved methods.

DocuSign Envelope ID: 330DEBD6-9A9E-4F34-BDCC-1AC1BAA701E9

E. Remove material that cannot be compacted to required density within specified tolerances, and replace with suitable material.

F. Where pipes, culverts, or structures extend into embankments, construct embankment to at least 2 feet over and 10 feet on either side of the pipe, culvert, or structure location prior to excavation.

G. Where fill is to be placed against hillsides or slopes steeper than 5 to 1 (horizontal to vertical), the existing slope shall be benched at least 6 feet horizontally into the hillside as the new embankment is placed in horizontal lifts.

H. Do not commence final shaping until above specified requirements have been completed. Shape entire surface of the slopes of cuts and embankments to true grade, alignment, and cross section indicated. Leave cut slopes in rock with uniform surface, and remove all loose overhanging rock.

3.8 SUBGRADE PREPARATION

A. Perform all cutting, blading, and shaping as required to cut and shape the sub grade to the grades and elevations indicated.

B. Sub grade preparation includes fine grading, reworking as necessary, and preparation of cut, fill, or embankment upon which the structure and equipment foundations, pipe, sub ballast, sub base, base, and pavement will be placed. Remove unsuitable sub grade material, such as weak or compressible soils.

C. Scarify and mix entire surface of sub grade to a depth of at least 6 inches. Moisture-condition scarified sub grade to 3 percent above optimum moisture content. If sub grade stabilization material is required, incorporate it into the sub grade at this time.

D. After the material has been thoroughly mixed and moisture-conditioned, accurately construct and fine grade the sub grade to indicated line, grade, and contour with high and low spots eliminated. Compact for full width to the specified density. Remove soft spots developed during working, fill with approved material, and re-compact.

E. Finish sub grade to straightedge or template within specified tolerances with the finished surface bladed to a uniform, dense, smooth texture.

3.9 FOUNDATION PREPARATION

A. Complete construction of the excavation support and dewatering systems prior to construction of structure and equipment foundations.

B. Avoid disturbing bottom of excavation. If bottom is disturbed, restore and stabilize the bearing foundation with compacted pervious backfill material as specified herein.

C. If material at bottom of the excavation is rock, remove loose material and roughly level the bearing foundation to indicated elevation. If the bottom contains occasional rock outcroppings or rock in only a portion of the area, remove such rock to a depth of 6 inches below indicated sub grade and backfill with lean concrete.

D. Where unsuitable material is encountered at the elevations indicated for foundations, all soft, loose, or unsuitable material shall be removed. The area shall be scarified to a minimum depth of 12 inches, and the planned elevation shall be re-established by backfilling with structural backfill, moisture-conditioning, and compacting to a minimum dry density of 95 percent of the maximum laboratory dry density as determined in accordance with ASTM D1557. Where the exposed foundation consists of competent, undisturbed in-place soils, scarifying may be omitted.

3.10 SUBGRADE FILLING/RAISING GRADE

A. Compacted fill for raising of sub grade to indicated elevation shall be constructed by approved methods. Fill material shall be spread in uniform lifts not exceeding 8 inches in uncompacted thickness. Fill material that does not contain sufficient moisture to compact properly shall be

sprinkled with water; if it contains excess moisture it shall be aerated or permitted to dry to the proper water content. Fill material and water shall then be thoroughly mixed before being compacted. Each layer of spread fill material shall be compacted to the specified density.

B. Control of fill shall consist of field inspection and testing to determine that each layer has been compacted to the required density and to ensure that optimum moisture is being obtained. Any layer or portion of a layer that does not attain the compaction required shall be scarified and re-compacted until the required compaction is obtained.

C. Spreading and compacting shall be performed as required to produce the required density and a uniform surface smooth and true to grade.

3.11 COMPACTION

A. Compaction Density: Compact each layer of embankment, fill, and backfill material to not less than the indicated or specified compaction. Required compactions are defined as Class I, Class II and Class III, as follows:
   1. Class I Compaction: 90 percent relative compaction as determined by ASTM D1557.
   2. Class II Compaction: 95 percent relative compaction as determined by ASTM D1557.
   3. Class III Compaction: 100 percent relative compaction as determined by ASTM D1557

B. Required Compactions:
   1. Embankment or Fill where the Surface will be Bearing Foundation: Class II for full depth. Where embankment construction exceeds 5 feet in depth, provide minimum Class I compaction below the top 2.5 feet.
   2. Fill Below Pavements: Class II for full depth. Where fill exceeds 3 feet in depth, provide minimum Class I compaction below the top 3 feet.
   3. Backfill around Structures: Class I under top 12 inches; Class II for top 12 inches.
   4. Cut-and-Cover Backfill: Class I to 36 inches above structure or utility; Class II for balance, with a minimum of Class II for top 12 inches.
   5. Original Ground or Cut Sub grade: Except as specified in Articles 3.08, Subgrade Preparation and 3.09, Foundation Preparation, where original ground or cut sub grade, or fill less than 1 foot thick, will be sub grade or bearing foundation, scarify the surfaces and provide Class II compaction for at least 8 inches in depth. Include the following additional requirements:
      a. Provide Class II compaction for original ground when such original ground is within 3.5 feet of top of rail profile or within 2.5 feet of finished pavement grade, for full width of pavement plus three feet on each side thereof.
      b. Provide Class II compaction for top 6 inches of undisturbed original ground upon which embankments are to be constructed.
   6. Where not otherwise indicated or specified and where structures are not involved, provide 92% relative compaction to minimize settlement. In excavated areas the top 0.5 foot of undisturbed material shall be compacted to 92 percent.

3.12 BACKFILLING

A. Use materials removed from site excavations if such material meets specified requirements.

B. Backfilling is required around all substructures. Fill all abandoned vaults, shafts, airways, adits, holes, pits, and other voids.

C. Place backfill in layers not to exceed eight inches of loose material, and compact each layer to specified density before the next layer is placed.

D. Place backfill material in such manner that unbalanced horizontal loads will not be applied to a newly placed structure or portion of structure, utility, or pipeline. Do not backfill around portions of

DocuSign Envelope ID: 330DEBD6-9A9E-4F34-BDCC-1AC1BAA701E9

structures requiring backfill on only one side or on less than all sides, until the concrete has reached the specified 28-day strength to withstand the earth pressures on structures.

E. When placing material for backfill around waterproofed structures, protect such structures and the waterproofing thereof with a shield when necessary to prevent displacement or injury by stones or other hard substances in the backfill.

F. Do not backfill on or against structural concrete until the specified 28-day concrete strength has been attained.

G. Complete backfill for end bents and abutments, including backfill for wingwalls, in accordance with the above specified time/strength limit. Step slopes behind abutments, unless otherwise indicated, to prevent backfill from acting as a wedge against the abutment. Provide drainage behind abutments and wingwalls as indicated.

H. Do not use compaction equipment and methods that produce excessive horizontal or vertical earth pressures on structures. Excessive horizontal earth pressures are those in excess of at-rest earth pressures. Excessive vertical earth pressures are those in excess of overburden pressures.

3.13 FINISH GRADING

A. Finish grade all areas to elevations and grades indicated. In areas to receive topsoil and landscape planting, finish grading shall be performed to a uniform 7 to 8 inches below the grades and elevations indicated.

B. Place and spread stockpiled topsoil to a uniform thickness of 6 inches (approximately) in areas to receive topsoil and landscape planting. Place and spread to a uniform thickness approximately 1 inch below finish grades indicated.

3.14 FIELD QUALITY CONTROL

A. Regulatory Requirements: In compliance with the California Building Code, Chapter 33 and Appendix Chapter 33, the Contractor's earthwork operations shall be performed under the observance and inspection of a Contractor-employed geotechnical engineer currently registered in the State of California, as follows:

1. Site preparation, cutting and shaping, excavating, filling, backfilling, and embankment construction shall be carried out under the inspection of the geotechnical engineer, who will perform appropriate field and laboratory tests, as determined by the geotechnical engineer, to evaluate the suitability of fill and backfill material, the proper moisture content for compaction, and the degree of compaction achieved. Fill or backfill that does not meet the specified requirements shall be removed or recompacted until the requirements are satisfied.
2. Cutting and shaping, excavating, conditioning, filling, backfilling, and compacting procedures require approval of the geotechnical engineer as they are successively performed. Work found to be unsatisfactory or work disturbed by subsequent operations before approval is granted shall be corrected in an approved manner as approved by the geotechnical engineer.

B. Density Tests: Compacted fill, backfill, and embankment shall be tested to verify compliance with specified requirements in accordance with ASTM D2922. Frequency of tests shall be in accordance with the Contractor's Quality Plan, but not less than the following:

1. Expansive Horizontal Areas: One test per 100 cubic yards, or fraction thereof, of fill or backfill placed.
2. Confined Areas and Embankments: One test per every second lift of fill, backfill, or embankment placed.

DocuSign Envelope ID: 330DEBD6-9A9E-4F34-BDCC-1AC1BAA701E9

C. Compaction Tests: Tests for compaction shall be performed in accordance with test procedures specified in ASTM D1557, Method D, as applicable. Field-testing of soils or compacted fill in place shall be performed in accordance with applicable requirements of ASTM D2922.

D. Moisture Content Tests: Compacted fill, backfill, and embankment shall be tested to verify compliance with specified requirements in accordance with ASTM D3017. Minimum frequency of tests shall be as specified above for density tests.

END OF SECTION

DocuSign Envelope ID: 330DEBD6-9A9E-4F34-BDCC-1AC1BAA701E9

SECTION 99-311100

CLEARING AND GRUBBING

PART 1 – GENERAL

1.1 SECTION INCLUDES

A. Clearing and grubbing
B. Tree branches
C. Demolition/removal
D. Disposal of removed materials and debris
E. Salvage
F. Backfill

1.2 RELATED SECTIONS

A. State of California, Department of Transportation (Caltrans), Standard Specifications (2010):
   1. Section 15 Existing Highway Facilities.
   2. Section 16 Clearing and Grubbing.
B. Dust control is specified in Section SC-40 Dust Control.
C. Temporary facilities, such as fences, barricades, warning lights, and other temporary safety measures, are specified in Section GC-35 Temporary Construction Facilities and Utilities.
D. Demolition of structures and removal, salvage, or other disposition of slabs, footings and foundations; existing pavement, curbs and gutters, sidewalks, headwalls, walls, and steps; utility service facilities; guardrail and posts, highway and street signs and fences; and other miscellaneous structures and site improvements that interfere with new construction are specified in Sections 99-024100, Demolition.
E. Removal of items that are buried below grade and salvaging the topsoil is specified in Section 99-310000, Earthwork.

PART 2 - PRODUCTS

2.1 MATERIALS AND EQUIPMENT

A. The Contractor shall furnish all materials, tools, equipment, facilities, and services as required for performing site clearing, grubbing and other site preparation work.

PART 3 - EXECUTION

3.1 GENERAL

A. Clearing and grubbing shall be performed as specified in Section 15, Existing Highway Facilities, and Section 16, Clearing and Grubbing, of the Caltrans Standard Specifications and these technical specifications, or as shown on the Plans. Coordinate with salvaging of topsoil specified in Section 99-310000, Earthwork

3.2 CLEARING AND GRUBBING

A. Clearing and grubbing shall include the removal and disposition of all objectionable material not specified for separate payment elsewhere in these technical specifications, including trees (less than 6 inches in diameter measured 4 feet from the ground), shrubs, other vegetation; and debris and rubbish of any nature.

DocuSign Envelope ID: 330DEBD6-9A9E-4F34-BDCC-1AC1BAA701E9

B. Do not start earthwork operations in areas where clearing and grubbing are not complete, except that stumps and large roots may be removed concurrently with excavation.

C. Where the work includes requirements for wood chip mulch, acceptable material from clearing and grubbing activities may be used to produce such mulch.

F. All existing vegetation, outside the areas to be cleared and grubbed, shall be protected from injury or damage resulting from the Contractor's operations.

G. All activities controlled by the Contractor, except cleanup or other required work, shall be confined within the limits of the areas to be graded.

H. Nothing herein shall be construed as relieving the Contractor of responsibility for final cleanup.

I. Stockpiling of items removed in conjunction with clearing and grubbing operations by the Contractor will not be allowed. Contractor shall remove and dispose of all such materials from the site on the same day as the clearing and grubbing operations.

END OF SECTION

DocuSign Envelope ID: 330DEBD6-9A9E-4F34-BDCC-1AC1BAA701E9

SECTION 99-321123
AGGREGATE BASE COURSE

PART 1 - GENERAL

1.1 SECTION INCLUDES

A. Aggregate base material.
B. Installation standards.
C. Spreading of material.
D. Compacting.
E. Field quality control.

1.2 RELATED SECTIONS

A. Section 99-321216, Asphalt Paving

1.3 CLASSIFICATION

A. Aggregate bases are designated as Class 2.

1.4 REFERENCES

A. American Society for Testing and Materials (ASTM):
   1. ASTM C136 — Test Method for Sieve Analysis of Fine and Coarse Aggregates
   2. ASTM D421 — Practice for Dry Preparation of Soil Samples for Particle-Size Analysis and Determination of Soil Constants
   3. ASTM D1241 — Specification for Materials for Soil-Aggregate Subbase, Base, and Surface Courses
   4. ASTM D1557 — Test Method for Laboratory Compaction Characteristics of Soil Using Modified Effort
   5. ASTM D2419 — Test Method for Sand Equivalent Value of Soils and Fine Aggregate
   6. ASTM D2844 — Test Method for Resistance R-Value and Expansion Pressure of Compacted Soils
   7. ASTM D2922 — Test Methods for Density of Soil and Soil-Aggregate in Place by Nuclear Methods (Shallow Depth)
   8. ASTM D3017 — Test Method for Moisture Content of Soil and Soil-Aggregate in Place by Nuclear Methods (Shallow Depth)
   9. ASTM D3744 — Test Method for Aggregate Durability Index
B. State of California, Department of Transportation (Caltrans), Standard Specifications, 2010 edition:
   1. Section 17 — Watering
   2. Section 26 — Aggregate Bases
C. City of Fairfield Standard Specification and Details.

1.5 SUBMITTALS

A. General: Refer to Section GC-43 Submittal of Shop Drawings, Product Data and Samples, for submittal requirements and procedures.
B. Product Data: Submit source, gradation, R-value, sand equivalent, and durability for the proposed base course material.

DocuSign Envelope ID: 330DEBD6-9A9E-4F34-BDCC-1AC1BAA701E9

Test Reports: Submit plant and field test reports as specified in Articles 2.02, Source Quality Control and 3.05, Field Quality Control, herein.

PART 2 - PRODUCTS

2.1 AGGREGATE BASE MATERIAL

A. Aggregate for the two classes of aggregate bases at the time the base material is deposited on the prepared sub grade or sub base shall conform with ASTM D1241 and the following requirements:

1. Class 2 Aggregate Base:

a. Class 2 aggregate base shall consist of crushed stone or gravel, free from vegetable matter and other deleterious substances. Aggregate shall consist of material of which 90 percent by weight shall be crushed particles. Composition of aggregate base, in percentages by weight, shall conform to one of the following gradings, determined in accordance with ASTM C136:

	Percentage Passing Sieves	
Sieve Sizes		**3/4-inch Maximum**
2-inch	-----	
1-1/2 inch		-----
1inch		100
3/4-inch		90-100
No. 4		35-55
No. 30		10-30
No. 200		2-9

b. Class 2 aggregate base shall conform to the following additional requirements:

Tests	**ASTM Test Method**	**Requirements**
Resistance (R-Value)	D2844	80 min.
Sand Equivalent	D2419	50 min.
Durability Index	D3744	40 min.

2.2 SOURCE QUALITY CONTROL

A. The Contractor shall perform sampling and tests of the aggregate base material in accordance with the ASTM Test Methods herein specified, to determine compliance with specified requirements. Samples shall be taken from material as delivered to the site, and shall be prepared in accordance with ASTM D421, as applicable.

B. Aggregate grading or sand equivalent test shall represent no more than 500 cubic yards of base course material or one days production, whichever is the greater amount.

PART 3 - EXECUTION

3.1 EXAMINATION

A. The Contractor shall call for an inspection by the Engineer and obtain written acceptance of the prepared sub grade or sub base before proceeding with the placement of aggregate base course.

B. The sub grade or sub base to receive aggregate base course, immediately prior to spreading, shall conform to the compaction and elevation tolerances indicated for the material involved and

DocuSign Envelope ID: 330DEBD6-9A9E-4F34-BDCC-1AC1BAA701E9

shall be free of standing water and loose or extraneous material.

3.2 INSTALLATION STANDARDS

A. Aggregate base course shall be applied over the prepared sub grade or sub base and compacted in accordance with Section 26, Aggregate Bases, of the Caltrans Standard Specifications May 2006.

B. Aggregate base course shall have minimum uniform thickness after compaction of dimensions indicated. Where not indicated, compacted thickness shall be 6 inches.

C. All compaction expressed in percentages in this section refers to the maximum dry density as determined by ASTM D1557 Method D.

3.3 SPREADING OF MATERIAL

A. Aggregate for base course shall be delivered as uniform mixture of fine and coarse aggregate and shall be spread in layers without segregation.

B. Aggregate base course material shall be free from pockets of large and fine material. Segregated materials shall be remixed until uniform.

C. Aggregate base material shall be moisture-conditioned to near optimum moisture content in accordance with the applicable requirements of Section 17, Watering, of the Caltrans Standard Specifications May 2010.

D. Aggregate base course 6 inches and less in thickness may be spread and compacted in one layer. For thickness greater than 6 inches, the base course aggregate shall be spread and compacted in two or more layers of uniform thickness not greater than 6 inches each.

3.4 COMPACTING

A. Relative compaction of each layer of compacted aggregate base material shall be not less than 95 percent as determined by ASTM D1557.

B. Thickness of finished base course shall not vary more than 3/4 inch from the indicated thickness at any point. Base that does not conform to this requirement shall be reshaped or reworked, watered, and recompact to achieve compliance with specified requirements.

C. The surface of the finished aggregate base course at any point shall not vary more than 3/4 inch above or below the indicated grade.

3.5 FIELD QUALITY CONTROL

A. The Contractor shall perform field tests in accordance with ASTM D2922 to determine compliance with specified requirements for density and compaction of aggregate base material, and with ASTM D3017 to determine moisture-content compliance of the installed base course.

B. Testing frequency shall be not less than one test for every 2,000 square feet of base course material, per layer or lift.

END OF SECTION

DocuSign Envelope ID: 330DEBD6-9A9E-4F34-BDCC-1AC1BAA701E9

SECTION 99-321216
ASPHALT PAVING

PART 1 - GENERAL

1.1 SECTION INCLUDES

A. Placing of base course.
B. Placing of asphalt concrete.
C. Sealant.
D. Field quality control.
E. Maintenance of pavement.

1.2 RELATED SECTIONS

A. Preparation of sub grade to proper grade for base course, including compaction, is specified in Section 99-310000, Earthwork.
B. Portland cement concrete paving is specified in Section 99-321313, Concrete Paving.
C. Aggregate base course for asphalt paving is specified in Section 99-321123 - Aggregate Base Course.
D. Painting of stripes and other markings on pavement is specified in Section 99-321723, Pavement Markings.
E. Portland cement concrete curbs and gutters are specified in Section 99-321621, Concrete Curbs, Gutters, Driveways and Walks.

1.3 REFERENCES

A. State of California, Department of Transportation (Caltrans), Standard Specifications (2010)
   1. Section 37 Bituminous Seals
   2. Section 39 Asphalt Concrete
   3. Section 88 Engineering Fabrics
   4. Section 92 Asphalts
   5. Section 93 Liquid Asphalts
   6. Section 94 Asphaltic Emulsions
B. State of California, Department of Transportation (Caltrans), Standard Test Methods:
   1. Calif. Test 202 Method of Tests for Sieve Analysis of Fine and Coarse Aggregates
   2. Calif. Test 375 Method of Determining the In Place Density and Relative Compaction of AC Pavement
   3. Calif. Test 379 Method of Determining Asphalt Content of Bituminous Mixtures by Use of the Troxler Nuclear Gauge (Model 3241)
   4. Calif. Test 382 Method of Test for Determination of Asphalt and Moisture Contents of Bituminous Mixtures By the Ignition Method

1.4 REGULATORY REQUIREMENTS

A. Asphaltic products and solvents shall be compliant with the latest regulations of the Bay Area Air Quality Management District regarding regulations governing permissible content of volatile organic compounds (VOC).

1.5 SUBMITTALS

DocuSign Envelope ID: 330DEBD6-9A9E-4F34-BDCC-1AC1BAA701E9

A. General: Refer to Section GC-43 Submittal of Shop Drawings, Product Data and Samples, for submittal requirements and procedures.
B. Mix Design: Submit proposed mix design for each asphaltic concrete mixture and seal coat to be used in the work, covering the specific materials to be used in the mixes. Include test data in support of each proposed mix design.
C. Test Reports: Submit test results of sampling and testing, and inspection records within 24 hours of asphaltic concrete placement.

1.6 PROTECTION

A. Protect concrete pavements and walks, curbs and bases, and other improvements adjacent to the operations with suitable materials. The Contractor shall be responsible for any damage caused by the Contractor's employees or equipment and shall make necessary repairs. Buildings and other surfaces shall be covered with paper or other protection, where required. All damage caused by the Contractor's operations shall be repaired or replaced as required.

PART 2 - PRODUCTS

2.1 BASE COURSE MATERIAL

A. Class 2 Aggregate Base mineral aggregate as specified in Section 32 11 23, Aggregate Base Course, of these Specifications.

2.2 PRIME AND TACK COATS

A. Prime Coat: Liquid asphalt, slow curing type in conformance with Section 93, Liquid Asphalts, of the Caltrans Standard Specifications.
B. Tack Coat: Diluted SS-1 or SS-1h emulsion in conformance with Section 94, Asphaltic Emulsions, of the Caltrans Standard Specifications.

2.3 PAVEMENT REINFORCING FABRIC

A. Pavement reinforcing fabric in conformance with Section 88, Engineering Fabrics, of the Caltrans Standard Specifications.

2.4 ASPHALT PAVING MATERIALS

A. Paving Asphalt: Use asphalt binder Grade PG 64-10 in accordance with Section 92, Asphalts, of the Caltrans Standard Specifications.
B. Aggregate: Type A, with the grading of the combined aggregate conforming to 1/2-inch maximum size, medium grading, or 3/4-inch maximum size, medium grading, as indicated, and as specified in Section 39, Asphalt Concrete, of the Caltrans Standard Specifications.
C. Mixing Facilities: Asphalt concrete surfacing material shall be furnished from an approved commercial asphalt central mixing plant.

2.5 SEAL COAT

A. Fog seal coat or fine seal coat, as indicated, in conformance with Section 37, Bituminous Seals, of the Caltrans Standard Specifications.

2.6 MIX DESIGN

DocuSign Envelope ID: 330DEBD6-9A9E-4F34-BDCC-1AC1BAA701E9

A. Design of asphaltic concrete mixes shall be provided by the Contractor, and shall be obtained from a qualified independent testing laboratory or agency, properly equipped to design asphaltic concrete mixes. Costs of obtaining mix designs shall be at the Contractor's expense.

B. Design of asphaltic concrete mixes, including aggregate quality and gradation, shall conform to the quality requirements of Section 39, Asphalt Concrete, of the Caltrans Standard Specifications.

2.7 SOURCE QUALITY CONTROL

A. The Contractor shall perform sampling and tests of materials in accordance with the following requirements:

1. Aggregate Grading: The combined aggregate, prior to addition of asphalt binder (paving asphalt), shall conform with the Operating Range requirements specified in Section 39, Asphalt Concrete, of the Caltrans Standard Specifications for the type of aggregate specified herein. Conformance with grading requirements shall be determined by California Test 202.
2. Frequency of Tests: Minimum testing frequency shall be one test for every 500 tons, or fraction thereof, for each graded aggregate placed each day.
3. Asphalt Content: Asphalt content shall be within plus or minus 0.50 percent of the mix design content. Conformance with asphalt content requirements shall be determined by California Test 382 or 379 from samples taken from the mat behind the paving machine. Minimum testing frequency shall be one test for every 500 tons, or fraction thereof, for each asphaltic paving mix placed each day.

PART 3 – EXECUTION

3.1 STAGE CONSTRUCTION

A. Asphalt concrete and asphalt concrete base shall be spread and compacted in layers.

B. The top layer of asphalt concrete shall not exceed 0.20-foot in compacted thickness. The next lower layer shall not exceed 0.25-foot in compacted thickness, and any lower layers shall not exceed 0.40-foot in compacted thickness.

C. Each layer of asphalt concrete base shall not exceed 0.40-foot in compacted thickness. No layer shall be placed over a layer which exceeds 0.25-foot in compacted thickness until the temperature at mid depth, of the layer which exceeds 0.25-foot in compacted thickness, is not more than 160°F.

3.2 PLACING OF BASE COURSE

A. The Contractor shall call for an inspection by the Engineer and obtain written approval of the sub grade before proceeding with the base course.

B. Base course shall be minimum uniform thickness after compaction of dimensions indicated. Where not indicated, compacted thickness shall be 6 inches for parking stalls and 8 inches for roads, driveways, and aisles of parking areas.

C. Base course shall be placed over finished sub grade and compacted in accordance with Section 99-321123, Aggregate Base Course.

D. After base course has been completed, the Contractor shall call for an inspection by the Engineer and obtain written approval before proceeding with application of the asphalt-wearing surface.

3.3 PLACING ASPHALT CONCRETE

DocuSign Envelope ID: 330DEBD6-9A9E-4F34-BDCC-1AC1BAA701E9

A. Areas to be paved shall be covered with a layer of hot asphalt concrete surfacing not less than the thickness indicated after compaction. Where not indicated, compacted thickness shall be 2 inches for parking stalls and 2-1/2 inches for roads, driveways, and aisles of parking areas.

B. Paving asphaltic concrete shall be delivered, laid, rolled, and finished in accordance with Section 39, Asphalt Concrete, of the Caltrans Standard Specifications.

C. Before placing asphalt concrete on untreated base, a liquid asphalt prime coat shall be applied to the base course in the areas to be surfaced in accordance with Section 39-4, Subgrade, Prime Coat, Paint Binder (Tack Coat) and Pavement Reinforcing Fabric, of the Caltrans Standard Specifications. Prime coat shall be applied at the rate of 0.25 gallons per square yard.

D. Pavement reinforcing fabric shall be embedded in the liquid prime coat in accordance with Section 39, Asphalt Concrete, of the Caltrans Standard Specifications.

E. Before placing asphalt concrete, a tack coat (paint binder) shall be applied to all vertical surfaces against which asphalt concrete surfacing will be placed. Tack coat (paint binder) shall be applied in accordance with Section 39-4, Subgrade, Prime Coat, Paint Binder (Tack Coat) and Pavement Reinforcing Fabric, of the Caltrans Standard Specifications at the rate of from 0.02 to 0.10 gallons per square yard.

F. Finish surface of the wearing course shall be thoroughly compacted, smooth, and free from ruts, humps, depressions, cold joints, or other irregularities.

G. Finish paving shall conform to slopes, lines, and finish grades indicated, and shall drain properly. Where adjacent surfaces are intended to be flush (as at concrete gutters, walks, and paving), they shall conform smoothly at all joints.

H. Ridges, indentations, and other objectionable marks left in the surface of the asphalt concrete by paving or rolling equipment shall be eliminated by rolling. The use of equipment that leaves ridges, indentations, or other objectionable marks in the asphalt concrete shall be discontinued, and other acceptable equipment shall be employed.

I. Where cold joints are indicated or necessary, cut back the placed and compacted cold asphalt a minimum of 3 inches with a concrete or masonry power saw, so that a vertical face of compacted full thickness material is exposed. Treat this surface with a tack coat before proceeding with the placement of new asphaltic concrete surfacing.

J. Finish paving shall conform to finish elevations within plus or minus 0.01 of a foot and shall be level to within plus or minus 1/4 inch in 10 feet when measured with a 10-foot straightedge in any direction.

K. For AC leveling and overlay, plane as necessary to allow a minimum overlay of two inches (0.17'). Finish paving shall conform to slopes, lines, and finish grades indicated on the plans, and shall drain properly. Where adjacent surfaces are intended to be flush such as at concrete gutters, walks, and paving, the AC overlay shall conform smoothly at all joints. Employ gutter/wedge cut techniques along existing curb and gutter to provide flush surface with existing curb and gutter.

L. A gutter / wedge cut consists of removing the existing asphalt pavement to a depth of two inches (0.17') below the lip of gutter, or to two inches (0.17') below existing grade when gutter cuts are made through old overlays to the face of curb.
The gutter / wedge cut shall daylight 6' from the lip of curb. The line from two inches (0.17') below the existing surface (at the face of the cut) to the daylight shall be a straight line.

1. A wedge cut shall be made straight through a minor street from lip of gutter to lip of gutter or as directed by the Engineer. When the overlay goes straight through a major side street (signalized intersection), a gutter cut will proceed around the return to the E.R. only or as directed by the Engineer. A conform cut shall be made in a similar manner to a gutter cut to allow a good conform to existing asphalt concrete to be left in place.
2. The purpose of gutter / wedge and conform cuts is to allow an exact conform with the lip of gutter or existing pavement and to maintain existing drainage; this conform of line and grade

DocuSign Envelope ID: 330DEBD6-9A9E-4F34-BDCC-1AC1BAA701E9

shall be maintained when the overlay is installed in these areas. Extra raking or other work required to fulfill this requirement is hereby specified at no extra cost to the City.

3. Gutter / wedge and conform cuts shall be accomplished by cold planing. The equipment used shall be a type capable or maneuvering close to structures and maintaining a straight line. The asphalt to remain in place shall not be damaged by the Contractor's operation in any way and shall provide a uniform and stable base for resurfacing.

3.4 SEAL COAT

A. Apply seal coat over finished paving surface in conformance with Section 37, Bituminous Seals, of the Caltrans Standard Specifications.

3.5 FIELD QUALITY CONTROL

A. The Contractor shall control the quality of the Work and shall provide adequate testing to assure compliance with these Specifications.

B. After completion of paving work, all paving shall be flooded with water, and any resulting "ponds" shall be ringed with chalk. Such hollows shall be corrected with addition of asphalt paving materials and re-rolling until all paving is completely level and free from hollows and high spots.

C. The Contractor shall perform in-place density and compaction tests of the completed pavement in accordance with California Test Method No. 375 to determine compliance with specified requirements. Relative compaction shall be 96 percent.

3.6 MAINTENANCE OF PAVEMENT

A. Upon completion of final rolling, traffic shall not be permitted on the finished pavement for at least six hours, and until the asphalt concrete has cooled sufficiently to withstand traffic without being deformed.

B. Finished pavement shall be maintained in finished clean condition until the Work is accepted by the Engineer.

END OF SECTION

DocuSign Envelope ID: 330DEBD6-9A9E-4F34-BDCC-1AC1BAA701E9

SECTION 99-321313
CONCRETE PAVING

PART 1 - GENERAL

1.1 SECTION INCLUDES

A. Materials and accessories.
B. Preparation of subgrade and base.
C. Formwork.
D. Placing concrete reinforcement.
E. Placing concrete.
F. Joints.
G. Finishing.
H. Curing and protection.
I. Installation of joint seals.
J. Field quality control.

1.2 RELATED SECTIONS

A. Preparation of subgrade to proper grade for concrete, including compaction, is specified in Section 99-310000, Earthwork.
B. Preparation of base is specified in Section 99-321123, Aggregate Base Course.
C. Portland cement concrete curbs and gutters are specified in Section 99-321621, Concrete Curbs, Gutters, and Walks.
D. Portland cement concrete, and various materials, services, and incidentals pertaining thereto shall conform to Section 99-032000, Concrete Accessories, Section 99-033000, Cast-In-Place Concrete, Section 99-030515, Portland Cement Concrete, and Section 99-033500, Concrete Finishing.

1.3 REFERENCES

A. American Association of State Highway and Transportation Officials (AASHTO):
   1. AASHTO M81 — Cut-Back Asphalt (Rapid-Curing Type)
B. American Concrete Institute (ACI):
   1. ACI 117 — Standard Tolerances for Concrete Construction and Materials
   2. ACI 318 — Building Code Requirements for Reinforced Concrete
C. American Society for Testing and Materials (ASTM):
   1. ASTM A53 — Specification for Pipe, Steel, Black and Hot-Dipped, Zinc-Coated, Welded and Seamless
   2. ASTM A615 — Specification for Deformed and Plain Billet-Steel Bars for Concrete Reinforcement
   3. ASTM A663 — Specification for Steel Bars, Carbon, Merchant Quality, Mechanical Properties
   4. ASTM C39 — Test Method for Compressive Strength of Cylindrical Concrete Specimens
   5. ASTM C309 — Specification for Liquid Membrane-Forming Compounds for Curing Concrete
   6. ASTM C496 — Test Method for Splitting Tensile Strength of Cylindrical Concrete Specimens
   7. ASTM D2628 — Specification for Preformed Polychloroprene Elastomeric Joint Seals

DocuSign Envelope ID: 330DEBD6-9A9E-4F34-BDCC-1AC1BAA701E9

for Concrete Pavements

D. Federal Specifications (FS):
   1. UU-B-790 Building Paper, Vegetable Fiber, (Kraft, Waterproofed, Water Repellent, and Fire Resistant)

1.4 SUBMITTALS

A. General: Refer to Section GC-43 Submittal of Shop Drawings, Product Data and Samples, for submittal requirements and procedures.
B. Product Data: Submit the respective manufacturer's product data for manufactured products.
C. Shop Drawings:
   1. Submit drawings that indicate the locations of all joints in concrete, including construction joints, expansion joints, isolation joints, and weakened-plane or contraction joints.

1.5 QUALITY ASSURANCE

A. Tolerances: Comply with requirements of ACI 117, Section on Pavements.

PART 2 - PRODUCTS

2.1 FORMS

A. Provide metal forms, weighing not less than 18 pounds per linear foot for pavement 8 inches thick, not less than 20 pounds per linear foot for pavement 9 inches thick, and not less than 22 pounds per linear foot for pavement 10 inches thick, and in no case less than 7/32 inch thick.
B. Provide side forms having a depth equal to the prescribed edge thickness of the pavement, without horizontal joints.
C. Provide forms having a base not less than 8 inches wide and a flanged tread or top surface not less than 2 inches wide. For multiple lanes, provide base width at least equal to height.
D. Provide forms not less than 10 feet long except where shorter forms are necessary for curves. Use metal keyway forms for the full length of roadway form to which attached. Provide wood bulkheads for the full width of pavement lane equipped with keyway form.
E. Provide holes for bars and dowel assemblies where required.
F. Provide at least three stake pockets to accommodate a 1 inch diameter stake in each section of form 10 feet or more in length, and at least two such pockets in each section of form less than 10 feet long.
G. Provide each section of form with a positive locking device that will secure it tightly to the adjoining section.
H. Provide forms free from warp and of sufficient strength to resist, without visible springing or settlement, all loads applied in the paving process.

2.2 MATERIALS AND ACCESSORIES

A. Portland Cement Concrete: Refer to Section 99-030515, Portland Cement Concrete, for requirements. Provide class of concrete as indicated on the Contract Drawings.
B. Liquid Asphalt: AASHTO M81, cut-back asphalt, rapid-curing type.
C. Subgrade Paper: Kraft laminated building paper with bituminous binder, reinforced, meeting requirements of FS UU-B-790.
D. Benches and Chairs: ACI 318.
E. Tie Bars: ASTM A615, Grade 60, of type and size indicated.

DocuSign Envelope ID: 330DEBD6-9A9E-4F34-BDCC-1AC1BAA701E9

F. Dowels: Plain round bars meeting requirements of ASTM A615, Grade 60, or ASTM A663, Grade 80, epoxy-coated bars, furnished with approved snug-fitting ASTM A53 galvanized pipe sleeve. Provide sleeve with one end closed.

G. Expansion-Joint Filler: ASTM D2628, preformed elastomeric joint seal.

H. Joint Sealing Compound: Refer to Section 99-031500, Concrete Accessories, for requirements.

I. Concrete Curing Compound: ASTM C309, Type 1.

PART 3 - EXECUTION

3.1 PREPARATION OF SUBGRADE AND BASE

A. Immediately prior to placing forms, condition and trim subgrade and base to exact shape, grade, and cross section required by the Contract Drawings. Condition and shape to indicated width between side forms plus not less than one extra foot on each side.

B. Use of a subgrade machine of approved type is permitted, in which case place forms in advance of exact conditioning and trimming, to permit use of the machine.

C. Where the crown is to be warped or sloped to conform to contour of intersecting streets, storm water inlets, and other intersecting contoured surfaces, shape subgrade to required depth and cross section by means of hand tools and other equipment as approved by the Engineer. In addition:

1. Drive grade stakes to proper elevation in the subgrade at 6-foot intervals in both directions.
2. Compact subgrade by rolling at least 1 foot wider on each side than the concrete.
3. Finish concrete in such locations by means of floats, shovels, spades, or other approved hand tools, operated so as to consolidate the concrete without segregation.

D. Deposit any excess material obtained from such preparations upon adjacent shoulders or as required.

E. Prepare base, if required, as specified in Section 99-321123, Aggregate Base Course.

3.2 FORMWORK

A. Obtain written approval from the Engineer of the subgrade and base prior to placing forms and impervious compacted subgrade.

B. Place subgrade paper where indicated.

C. Do not use built-up forms. Remove forms with battered top surfaces, distorted faces or bases, and forms that are deformed or broken in any way; and, if straightened and repaired, do not reuse until they have been inspected and approved in writing by the Engineer.

D. Do not use forms showing a variation of more than 1/8 inch in a 10-foot length from the plane of the top or face when tested with a straightedge.

E. Join forms neatly and tightly and stake securely with stakes in every pocket. Drive up fully all locking devices at form joints so as to produce a smooth fitting, rigid joint.

F. Maintain proper grade and alignment under all working conditions. Maintain base of forms directly in contact with the finished subgrade and base.

G. Building of pedestals of earth or other materials upon which to rest forms in order to bring them to the required grades will not be permitted.

H. Clean and coat forms with form release compound before concrete is placed against them, each time they are used.

I. Do not remove forms from freshly placed concrete until the concrete has set for 12 hours.

3.3 PLACING CONCRETE

A. Notify the Engineer at least 24 hours in advance of placing concrete.

DocuSign Envelope ID: 330DEBD6-9A9E-4F34-BDCC-1AC1BAA701E9

B. In the event completion of concrete placement during darkness should become necessary, provide a lighting system adequate to illuminate all concrete-placement operations.

C. An interval of more than 45 minutes between placing of two consecutive concrete batches will be cause for stopping paving operations. Should this occur, place a bulkhead with construction joint keyway.

D. Place concrete while fresh. Retempering of concrete will not be not permitted.

E. Do not chute concrete directly on to subgrade or base from any type of hauling unit without written permission from the Engineer.

F. Place concrete pavement in full traffic lane widths, separated by construction joints; or if approved, the concrete pavement may be placed monolithically, two or more traffic lanes wide without a construction joint, but with a longitudinal weakened-plane joint at each traffic lane line.

G. Deposit concrete in successive batches on the subgrade or base to full width of traffic lane and strike off with an approved screed-type finishing machine.

H. When constructing adjacent traffic lanes, the wheels of the finishing machine that rest on previously completed concrete shall be flat, without flanges, and the inside edge of the tread of the wheels shall not operate so close to edge of slab as to cause spalling or damage. The tread of the wheels shall not be less than 3-inches in width. The wheels on the opposite side that operate on the steel side forms shall have flanges on both sides.

I. Use a mechanical spreader of an approved type, designed to move the volume of freshly deposited concrete transversely.

J. Use concrete already placed in adjacent traffic lane, curb, or gutter as the form for new concrete placed adjacent thereto, but not until the concrete placed in the first lane has attained a split tensile strength of at least 300 pounds per square inch, as determined by ASTM C496.

K. Consolidate concrete by means of suitable vibrating screed, internal vibrator, or other approved vibratory equipment such that the concrete is effectively consolidated without segregation. Maintain amplitude of vibration such that the vibrations are perceptible on the surface of the concrete at least one foot from the vibrating equipment. Provide a device for measuring and indicating the actual frequency of vibrations.

L. Perform screeding and tamping by making one complete pass over the entire area of the pavement. Adjust the tamper to produce the proper tamping action and adjust screeds to an elevation slightly above finished grade, so that when properly consolidated and finished, the completed surface of the pavement will be at the required grade, true to cross section indicated, and free from laitance and porous areas.

M. Concrete required to be placed in widths less than a normal traffic lane may be compacted and shaped by a powered mechanical compacting and shaping machine supplemented by hand methods as necessary. Deposit concrete as nearly as possible in its final position. Do not use vibrators for extensive shifting of masses of fresh concrete.

3.4 JOINTS

A. General:

1. Joints in pavement are designated as longitudinal and transverse construction joints, transverse expansion joints, and longitudinal and transverse weakened-plane joints.
2. Construct the faces of all joints normal to the finished surface of the road.
3. Construct transverse joints normal to the centerline of the road and extending full width of pavement. Construct similar types of transverse joints in line with each other across the full width of the pavement.
4. Construct longitudinal joints coincident with or parallel to the pavement centerline.
5. Install load transfer devices parallel to finished surface of the road.
6. Maintain finished surface of concrete in the same plane on both sides of a joint.

DocuSign Envelope ID: 330DEBD6-9A9E-4F34-BDCC-1AC1BAA701E9

B. Construction Joints:
   1. Construction joints shall be made when placing fresh concrete against hardened concrete at planned locations and elsewhere when concreting is interrupted for longer than 45 minutes.
   2. Connect concrete on both sides of longitudinal construction joints with tie bars as indicated.
   3. Do not place transverse construction joints within 10 feet of any other transverse joint. Should it become necessary to stop concreting for a period of time sufficient to require the installation of a bulkhead and construction joint within 10 feet of an existing transverse joint, remove and waste the concrete that has been placed beyond the existing joint.

C. Transverse Expansion Joints:
   1. Form transverse expansion joints at indicated locations by means of preformed expansion joint filler. Support the joint strips in position by means of metal holders and end supports. Hold the supports firmly in position during concreting, and maintain them in place after completion of pavement.
   2. Use metal holders fabricated of minimum 16-gage sheet steel in the form of a deep channel extending not less than 4 inches downward on both sides of the joint strip, slotted and cut away as necessary to allow the concrete to make close contact with the joint strip at close intervals. Spread ends of holders to admit the end supports.
   3. During placement and consolidation of concrete, secure joint holder and end supports so as to prevent movement of the joint strip and to keep the top edge of the joint strip approximately 1/2 inch below the surface of finished pavement. After concrete has been placed and consolidated, the metal holder may be removed and a suitable metal channel substituted therefore; fit the channel snugly over the top edge of the joint strip and maintain it there until the joint is edged.
   4. After side forms are removed, remove concrete that has flowed around the ends of the joint filler.

D. Weakened-Plane Joints:
   1. Construct weakened-plane joints with a power concrete or masonry saw to a depth of not less than 2 inches and a width of 1/4 inch, plus or minus 1/16 inch. Produce clean cuts with sharp edges and no dislocation of coarse aggregate.
   2. Saw weakened-plane joints not less than twelve hours nor more than twenty-four hours after placing concrete, unless otherwise approved by the Engineer. Conduct night operations if necessary to meet these time limits. Maintain a stand-by power concrete saw on the site at all times when paving operations are under way.
   3. Do not saw where volunteer transverse cracks exist. If a volunteer transverse crack exists within 5 feet of a planned, sawed joint, omit the sawed joint, but do not omit more than three consecutive planned, sawed joints.
   4. Restore curing compound disturbed by sawing operations. Conduct sawing operations in such a manner that the surface and edges of pavement will be unprotected for not more than 20 minutes.
   5. At the Contractor's option, longitudinal weakened-plane joints at traffic lane lines in multilane monolithic concrete pavement may be formed by placing a continuous strip of plastic or other approved material that will not react adversely with the concrete. Use joint insert material of such width and character that, when placed vertically in the concrete, it will not bond with the concrete and will form an effective weakened-plane joint not less than 2 inches deep.
   6. Insert the joint material with a mechanical device that places the material in a continuous strip, except where intervening structures break the continuity of paving. Splices in joint material will be permitted if splices are effective in maintaining the continuity of the joint material as placed.

DocuSign Envelope ID: 330DEBD6-9A9E-4F34-BDCC-1AC1BAA701E9

7. Maintain top of joint material not more than 1/8 inch below finished surface of concrete. Do not deform joint material from a vertical position. Maintain alignment of finished joint parallel with center line of pavement, and free of local irregularities that exceed 1/2 inch, measured by a 12 foot straightedge, except for normal curvature of center line alignment.
8. Use a mechanical installation device to vibrate the concrete during placement of the strip, to cause the concrete to flow evenly about the joint material.
9. On completion of joint sawing, or on removal of the optional joint insert material, clean the joint and remove moisture by blowing with compressed air if necessary. Fill the joint with joint sealing compound in accordance with the manufacturer's instructions.

3.6 FINISHING

A. Following placing of concrete and after it has been screeded with a transverse finishing machine, screed longitudinally with a power-operated longitudinal finishing machine of an approved type. Work longitudinal screed cross-wise so as to level any irregularities in the surface.

B. Following longitudinal screed, use an approved scraping strike off for removing any accumulation of excess mortar, laitance, or inert material from the surface.

C. For the final finish, drag surface with a single full width strip of burlap to produce a uniform gritty texture on the surface. Keep burlap wet and periodically wash out to remove accumulations of mortar.

D. After burlap dragging has been completed and concrete has taken its initial set, use an edging tool with 1/4 inch radius along each edge of the surface to prevent chipping of the edges in the removal of forms. Tool in same manner the longitudinal edge of any concrete surface adjoining previously placed pavement, to avoid subsequent spalling. Edge all joints at the same time, working from suitable bridges. Take particular care to keep surface of concrete in the same plane on both sides of each joint. Kneeling planks will not be permitted on the concrete surface.

E. Where special circumstances require, hand float finishing may be substituted for a finishing machine, providing the following requirements are met:
   1. Use float of approved design and construction to provide a true floated surface.
   2. Operate each float from the side of the pavement and parallel to the centerline of the pavement.
   3. Use edge of float to cut down high areas. Float removed material into depressions until a true surface is obtained.
   4. On each successive passage of the float, slightly lap the previous path; and, upon completion of each passage, bring the float back and smooth the overlap between the two passages.
   5. Operate floats as far back of tamping machine as the concrete remains workable, with sufficient passes to remove perceptible irregularities.
   6. Maintain at least one spare float in good condition and available on the worksite at all times.

3.7 CURING AND PROTECTION

A. Comply with the applicable requirements of Section 99-033500, Concrete Finishing, for curing concrete with liquid membrane-forming curing compound. Do not permit traffic on new concrete pavement until the concrete has attained its 28-day compressive strength as determined by strength tests in accordance with ASTM C39.

3.8 INSTALLATION OF JOINT SEALS

A. Install joint fillers and sealing compounds where indicated in accordance with applicable requirements of Section 99-031500, Concrete Accessories.

DocuSign Envelope ID: 330DEBD6-9A9E-4F34-BDCC-1AC1BAA701E9

3.9 FIELD QUALITY CONTROL

A. Strength Tests: The Contractor shall perform strength tests of concrete as specified in Section 99-030515, Portland Cement Concrete.

B. Thickness: After pavement is placed and cured, the Contractor shall take core samples at locations designated by the Engineer, for determination of actual thickness. A minimum of one core sample shall be obtained from each 100 feet of roadway for each lane.

END OF SECTION

DocuSign Envelope ID: 330DEBD6-9A9E-4F34-BDCC-1AC1BAA701E9

SECTION 99-321621

CONCRETE CURBS, GUTTERS, AND WALKS

PART 1 - GENERAL

1.1 SECTION INCLUDES

A. Materials and accessories.
B. Preparation of sub grade.
C. Types of construction.
D. Joints.
E. Form removal.
F. Finishing.
G. Curing and protection.
H. Field quality control.

1.2 RELATED SECTIONS

A. Preparation of sub grade to proper grade for concrete, including compaction, is specified in Section 99-310000, Earthwork.
B. Work shall conform with Section 73, Concrete Curbs and Sidewalks and Section 90, Portland Cement Concrete, of the Caltrans Standard Specifications with the following additions: Portland cement concrete, concrete reinforcement, and various materials, services, and incidentals pertaining thereto shall conform to Section 99-031500, Concrete Accessories, Section 99-033000, Cast-In-Place Concrete, Section 030515, Portland Cement Concrete, and Section 99-033501, Concrete Finishing.

1.3 REFERENCES

A. American Concrete Institute (ACI):
   1. ACI 117 Standard Specification for Tolerances for Concrete Construction Materials
   2. ACI 301 Standard Specifications for Structural Concrete
   3. ACI 318 Building Code Requirements for Reinforced Concrete
B. American Society for Testing and Materials (ASTM):
   1. ASTM A53 Specification for Pipe, Steel, Black and Hot-Dipped, Zinc- Coated, Welded and Seamless
   2. ASTM A615 Specification for Deformed and Plain Billet-Steel Bars for Concrete Reinforcement
   3. ASTM A663 Specification for Steel Bars, Carbon, Merchant Quality, Mechanical Properties
   4. ASTM C260 Specification for Air-Entraining Admixtures for Concrete
   5. ASTM C309 Specification for Liquid Membrane-Forming Compounds for Curing Concrete
   6. ASTM C881 Specification for Epoxy-Resin-Base Bonding Systems for Concrete

1.4 SUBMITTALS

A. General: Refer to Section GC-43 Submittal of Shop Drawings, Product Data and Samples, for submittal requirements and procedures.
B. Product Data: Submit the respective manufacturer's product data for manufactured products.
C. Shop Drawings:

DocuSign Envelope ID: 330DEBD6-9A9E-4F34-BDCC-1AC1BAA701E9

1. Submit drawings that indicate the section profile of curb and gutter, and the locations of joints in concrete, including construction joints, expansion joints, isolation joints, and contraction joints.
2. Submit drawings of extruded curbs and gutters, if proposed, and any modification of the indicated section profile required by the extrusion process.

1.5 QUALITY ASSURANCE

A. Tolerances:
   1. Construct concrete surfaces within 1/4 inch of the indicated elevation, and deviating not more than 1/8 inch from a 10-foot straightedge placed anywhere on the surface.
   2. Slab tolerances shall be “straightedge tolerance” as specified in ACI 117.

B. Finishes: Slab finishes shall be as specified herein in accordance with the requirements of ACI 301.

C. Site Mock-Ups: Provide site mock-up, in accordance with GC-43 Submittal of Shop Drawings, Product Data and Samples, at least 3 feet by 4 feet in size, of slab finishes for walks, for the Engineer's review and approval. Site mock-ups require approval of the Engineer in writing before this work may proceed.

PART 2 - PRODUCTS

2.1 MATERIALS AND ACCESSORIES

A. Portland Cement Concrete: Refer to Section 99-030515, Portland Cement Concrete, for requirements. All curb, gutter and sidewalk shall shall be constructed of 3000 psi portland cement concrete.

B. Benches and Chairs: ACI 318.

C. Tie Bars: ASTM A615, Grade 60, of type and size indicated.

D. Dowels: Plain round bars meeting requirements of ASTM A615, Grade 60, or ASTM A663, Grade 80, epoxy-coated bars, furnished with approved snug-fitting ASTM A53 galvanized pipe sleeve. Provide sleeve with one end closed.

E. Weep Holes: ASTM A53 galvanized pipe of size indicated.

F. Expansion-Joint Filler and Joint Sealing Compound: Refer to Section 99-031500, Concrete Accessories, for requirements.

G. Surfacing Material for Nonslip Finish: Refer to Section 99-033501, Concrete Finishing, for requirements.

H. Concrete Curing Compound: ASTM C309, Type 1.

I. Epoxy Adhesive: ASTM C881, Type V for load-bearing concrete, Grade and Class as determined by project conditions and requirements.

J. Cushion: Shall be mechanically compacted Class 2 Aggregate Base.

PART 3 - EXECUTION

3.1 PREPARATION OF SUBGRADE

A. Excavate for and prepare the sub grade as specified in Section 99-310000, Earthwork, true to the indicated grade and cross section.

B. Test completed sub grade for correct grade and cross section by means of template supported on side forms.

C. Dampen sub grade and forms just before placing concrete.

D. The finished subgrade immediately prior to placement of aggregate base shall be compacted to 92% for a depth of 0.5 feet.

DocuSign Envelope ID: 330DEBD6-9A9E-4F34-BDCC-1AC1BAA701E9

3.2 TYPES OF CONSTRUCTION

A. All curb, gutter, valley gutter and sidewalk shall be placed monolithically unless otherwise specified.

B. Provide cast-in-place concrete construction, plain or reinforced as indicated. Curbs, gutters and valley gutters, shall be formed accurately to the indicated section profile with template screed.

C. Use of an extrusion machine is allowed. A test pour may be required by the City Engineer. All edges shall have smooth even lines in both the horizontal and vertical plane. The grade tolerance is the same as formed concrete.

3.3 JOINTS

A. Expansion Joints:

1. Construct 3/8-inch to 1/2-inch thick expansion joints in the following locations unless otherwise noted:
   a. In curb and combination curb and gutter at the locations of expansion joints in the concrete roadway.
   b. In curb or combination curb and gutter, at points where curved and tangent sections join.
   c. Between curb or combination curb and gutter, and any drain inlet, or similar structure occurring within the limits of the curb or combination curb and gutter.
   d. At corners in sidewalks, following the projections of the building lines from the corner of the building to the curb.
   e. Between sidewalks and any permanent structure.
   f. Between sidewalk and curb.
   g. Through sidewalks at intervals not greater than 15 feet.
   h. In sidewalks, encircling fixtures more than 12 inches in diameter.
2. Construct expansion joints as specified in Section 99-321313, Concrete Paving, except that load transfer devices will not be required unless indicated. Shape preformed filler to cross section of curbs and combination curb and gutter.

B. Contraction Joints: In sidewalks, provide contraction joints as indicated in uniform intervals not greater than 6 feet, with the edges rounded to a 1/4-inch to 3/8-inch radius.

C. Tooling: Finish joints with an edging tool having 1/4-inch to 3/8-inch radius, leaving joints free of mortar and concrete. In preformed type joints, leave joint filler material exposed for full length of joint with clean and true edges.

D. Joint Sealing:

1. Seal to within 1/8 inch of pavement surface joints in curbs and gutters, including gutter surfaces of combination curb and gutter sections; all joints between curbs and vehicular pavement; all joints between gutters and vehicular pavement; and all other expansion joints. Do not seal other joints unless so indicated.
2. Do not seal joints until concrete curing is complete. Prior to installation of the joint sealing compound, clean the joints of dirt and other foreign material. Joints may be cleaned with compressed air jets provided that the air in such jets is free of oil or water. Do not fill joints when there is any free water in or adjacent to the joints. Joint walls and all surfaces to which the sealing material is to adhere shall be surface dry for at least three hours prior to sealing.
3. Apply with approved pressurized equipment. Perform sealing of joints to make them impervious to water and to prevent the sealing compound from spreading over the surface of the pavement.

3.4 FORMS

A. Lumber used for forms must be surfaced on the side placed next to the concrete and shall not be less than 1-1/2 inches thick after being surfaced. Warped forms and forms not having a smooth, straight upper edge shall not be used. Benders or thin planks, rigidly placed, may be used on curves, grade changes, or the curb returns.

B. All forms shall be clean and coated with a light anti-bonding oil to prevent the concrete from adhering to them. All forms must be carefully set to proper alignment and grade and shall be rigidly held in place by the use of steel or wooden stakes. Clamps, spreaders and braces shall be used where required to insure rigidity in the forms.

C. Forms shall not vary from vertical grade by more than 0.02 feet and from horizontal alignment by more than 0.05 feet within the distance not to exceed 25 feet at each occurrence. Unnecessary meandering of the alignment shall be sufficient cause for rejection and removal. All forms shall have smooth even lines in both the horizontal and vertical plane. A windrow of earth placed against the forms prior to placing concrete may be required to prevent them from bulging.

D. Form Removal.
   1. Remove front curb forms not less than two nor more than six hours after placing concrete, but in no case while the concrete is still plastic enough to slump.
   2. Remove other forms not less than twelve hours after finishing is completed.

3.5 PLACING and FINISHING

A. No concrete shall be placed or finished in the rain. It shall be the contractor's responsibility to schedule his operations such that concrete will not be placed or finished in the rain.

B. Finished concrete shall have a high quality appearance. Defects such as crooked joints, exposed aggregate, surface pitting, or excessively rough finish will be cause for rejection. Removal and replacement will be done at Contractor’s expense.

C. Placement of driveways and handicap ramps require careful journeyman quality finishing. Through the driveway flowline a tangent line should be projected from full curb to full curb to assure that the 1" driveway lip does not 'encroach' into the flowline. The longitudinal curbline extension score line through the driveway shall be 6" from flowline. To assure positive flow, driveways and handicap ramps will be flow tested during installation.

D. At the end of each day's pour, when work is terminated, or when a delay of more than 30 minutes occurs, a construction joint, consistent with the jointing pattern, shall be made vertical or square ended and shall end the work. In no case shall the end of a day's pour terminate in a driveway or handicap ramp.

E. Curb, Combination Curb and Gutter and Valley Gutter:
   1. Trowel the face of curb smooth to a depth of not less than 2 inches below the flow line, or to the flow line of integral curb and gutter, and finish with a steel trowel, all immediately after removal of front curb forms.
   2. Finish all curb edges with a radius of 1/2-inch.
   3. Provide a final fine brush finish to both top and face of curb with brush strokes parallel to the line of the curb, so that both top and front face present the same uniform appearance.
   4. Keep the curb face wet during above finishing operations.
   5. Allow no coarse aggregate to show on the finished curb surface.

F. Sidewalk, Median Paving, and Ramps:
   1. After the concrete has been placed, consolidated, struck off, leveled, grooved and edged as specified herein and in Section 99-033000, Cast-In-Place Concrete, and in Section 99-033501, Concrete Finishing, do not work the concrete further until ready for floating.

DocuSign Envelope ID: 330DEBD6-9A9E-4F34-BDCC-1AC1BAA701E9

2. Provide "floated finish" or light "broom finish" as indicated in accordance with the requirements of ACI 301.
3. For pedestrian and wheelchair ramps, and all other surfaces where the Contract Drawings require a non-slip finish, provide a "nonslip finish" in combination with a "floated finish" or "broom finish" in accordance with the requirements of ACI 301.
4. Broom finish shall be applied perpendicular to the direction of traffic flow.

G. Joints and Edges: As soon as the condition of the work permits, perform joint work, edging, and marking. Weakened plane joints and score lines shall be constructed according to the standard details, and at right angles to the curb line.

3.6 CURING AND PROTECTION

A. Comply with the applicable requirements of Section 99-033501, Concrete Finishing, for curing concrete with liquid membrane-forming curing compound. Do not permit traffic on new concrete pavement until the concrete has cured a minimum period of ten days.

B. Provide damp curing only, in accordance with Section 99-033501, Concrete Finishing, for concrete slab surfaces indicated to be treated with concrete hardener and dust proofer.

3.7 FIELD QUALITY CONTROL

A. The Contractor shall perform inspections and tests as specified in Section 99-030515, Portland Cement Concrete. The Contractor shall provide such samples and services to facilitate testing as specified in Section 99-030515, Portland Cement Concrete.

B. After construction, gutters shall be checked by flowing water. The Engineer or his representative must be present during the flow test. Any high spots or depressions revealed by the flow test (which exceed 0.02 foot) shall be repaired by removing that section of concrete and replacing it to the correct grade.

C. Finished face of curb shall not vary by more than an aggregate total of 0.05 foot from the design alignment within a distance not to exceed 25 feet at each occurrence. Unnecessary meandering of the alignment shall be sufficient cause for rejection and removal.

END OF SECTION

DocuSign Envelope ID: 330DEBD6-9A9E-4F34-BDCC-1AC1BAA701E9

SECTION 99-321713

PARKING BUMPERS

PART 1 - GENERAL

1.1 SECTION INCLUDES

A. Parking bumpers.
B. Adhesive.
C. Steel bars for installation.

1.2 REFERENCES

A. State of California, Department of Transportation (Caltrans), Standard Specifications, 2010 edition:
   1. Section 95 Epoxy

1.3 SUBMITTALS

A. General: Refer to Section GC-43 Submittal of Shop Drawings, Product Data and Samples, for submittal requirements and procedures.
B. Shop Drawings: Submit Shop Drawings of bumpers, including plan layout and installation details, for approval.
C. Product Data: Submit manufacturers' product data of precast bumpers and epoxy adhesive for approval.

1.4 QUALITY ASSURANCE

A. Precast parking bumpers shall be manufactured for the intended purpose by a company or firm specializing in the manufacture of precast concrete parking appurtenances.

PART 2 - PRODUCTS

2.1 MATERIALS

A. Parking Bumpers:
1. Provide precast concrete parking bumpers of half octagonal configuration and dimensions indicated. Unless indicated otherwise, provide bumpers of 36-inch length.
2. Bumpers shall be manufactured of Class 4000 reinforced concrete, as specified in Section 99-030515 - Portland Cement Concrete, to withstand constant use and rough service. Each bumper shall be reinforced with two No. 4 deformed steel reinforcing bars, minimum.
3. Each bumper to be installed on at-grade asphalt pavement shall be manufactured with two holes to accommodate the installation rebar. Holes shall be positioned 6 inches in from each end.
4. Bumpers to be installed on concrete slabs of parking structures, shall be manufactured without holes.

B. Adhesive: Adhesive for anchoring bumpers or wheel stops to pavement shall be an epoxy adhesive manufactured for the purpose, similar and equal to the adhesives specified in Section 95 of the Caltrans Standard Specifications, Article 95-2.04 or 95-2.05.

PART 3 - EXECUTION

DocuSign Envelope ID: 330DEBD6-9A9E-4F34-BDCC-1AC1BAA701E9

3.1 INSTALLATION

A. Precast concrete bumpers shall be anchored and secured in position on at-grade asphalt pavements, as indicated, with two No. 5 epoxy-coated rebar and an appropriate epoxy adhesive as specified in Article 2.01.B herein.

B. Precast concrete bumpers shall secured in position on at-grade concrete pavements, as indicated, with an appropriate epoxy adhesive as specified in Article 2.01.B herein.

END OF SECTION

DocuSign Envelope ID: 330DEBD6-9A9E-4F34-BDCC-1AC1BAA701E9

SECTION 99-321723

PAVEMENT MARKINGS

PART 1 - GENERAL

1.1 SECTION INCLUDES

A. Traffic line paint.
B. Application of traffic striping and control markings.

1.2 RELATED SECTIONS

A. Asphalt pavement is specified in Section 99-321216 - Asphalt Paving.
B. Concrete pavement is specified in Section 99-321313 - Concrete Paving.
C. Concrete curbs, gutters, and walks are specified in Section 99-321621 - Concrete Curbs, Gutters, and Walks.
D. All other painting is specified under Division 9, Finishes.

1.3 REFERENCES

A. State of California, Department of Transportation (Caltrans), Standard Specifications, 2010 edition:
   1. Section 84 Traffic Stripes and Pavement Markings
B. California Air Resources Board (CARB):
   Latest regulations governing permissible content of Volatile Organic Compounds (VOC) in paints

1.4 SUBMITTALS

A. General: Refer to Section GC-43 Submittal of Shop Drawings, Product Data and Samples, for submittal requirements and procedures.
B. Shop Drawings: Submit drawings and diagrams, indicating stripe width of roadway divider stripes and parking stalls, configuration and dimensions of directional arrows, style and size of letters for "compact car" designation, configuration and dimensions of international handicapped symbol, and any other traffic control markings on pavement, such as "in" and "out" or "enter" and "exit" designations as indicated.
C. Certificate of Compliance: Submit evidence or affidavit that certifies that paint to be used complies with latest CARB/VOC regulations.

PART 2 - PRODUCTS

2.1 MATERIALS

A. Traffic Line Paint: Provide paint conforming with the requirements of Section 84-3 of the Caltrans Standard Specifications, white in color for traffic striping, parking stalls, and other control markings on pavement, yellow in color for traffic control markings where indicated, blue in color for accessible parking stalls, red in color for curbs where no parking is indicated, white in color for curbs where passenger discharge and pickup are indicated, and white-yellow-green striping on curbs where taxicab parking is indicated.
   1. Provide glass beads only for traffic stripes and control markings on road or street pavements.

PART 3 - EXECUTION

DocuSign Envelope ID: 330DEBD6-9A9E-4F34-BDCC-1AC1BAA701E9

3.1 APPLICATION

A. Provide traffic striping and control markings on pavement and parking stalls in accordance with the layout, configurations, and dimensions indicated on the Contract Drawings and approved Shop Drawings.

B. Paint application equipment shall conform with the applicable requirements of the Caltrans Standard Specifications.

C. Traffic control markings and parking stalls shall be applied with the use of substantial cutout patterns and templates, or with striping equipment that applies straight, uniform width, sharp lines. Coverage of paint shall be thorough and complete in accordance with the paint manufacturer's instructions and recommendations.

D. Where "enter" and "exit" control markings are side-by-side on pavements, indicating two-way traffic, such "enter" and "exit" designations shall be different colors, such as white and yellow, with a centerline separating the two directions of traffic.

E. Traffic control markings and parking stalls shall be sharp and accurate, straight where required, without fuzziness at edges of lines.

F. Accessible parking stalls shall include the International Symbol for Accessibility.

G. At completion, the Contractor shall check the work thoroughly and shall touchup traffic control markings and parking stalls that are not distinct or thorough in coverage, or are not uniform in color.

END OF SECTION

DocuSign Envelope ID: 330DEBD6-9A9E-4F34-BDCC-1AC1BAA701E9

SECTION 99-321726

DETECTABLE WARNING TACTILES

PART 1 – GENERAL

1.1 DESCRIPTION

A. This Section includes specifications for detectable warning tactile and curb ramp detectable warning surface.

1.2 REFERENCE STANDARDS

A. ASTM International (ASTM):

1. B117 Practice for Operating Salt Spray (Fog) Apparatus
2. C501 Test Method for Relative Resistance to Wear of Unglazed Ceramic Tile by the Taber Abraser
3. C1028 Test Method for Determining the Static Coefficient of Friction of Ceramic Tile and Other Like Surfaces by the Horizontal Dynamometer Pull-Meter Method
4. 0570 Test Method for Water Absorption of Plastics
5. 0638 Test Method for Tensile Properties of Plastics
6. 0695 Test Method for Compressive Properties of Rigid Plastics
7. 0790 Test Methods for Flexural Properties of Unreinforced and Reinforced Plastics and Electrical Insulating Materials
8. 01308 Test Method for Effect of Household Chemicals on Clear and Pigmented Organic Finishes
9. 05420 Test Method for Impact Resistance of Flat, Rigid Plastic Specimen by Means of a Striker Impacted by a Falling Weight (Gardner Impact)
10. E84 Test Method for Surface Burning Characteristics of Building Materials
11. G26 Practice for Operating Light-Exposure Apparatus (Xenon-Arc Type) With and Without Water for Exposure of Nonmetallic Materials (Withdrawn 2000, replaced by G155)

B. Americans with Disabilities Act (ADA) and Architectural Barriers Act (ABA)

C. Caltrans Standard Plan A88A and A88B

1.3 SUBMITTALS

A. Shop Drawings: Submit shop drawings showing fabrication details; panel surface profile; fastener locations; plans of panel placement including joints, and material to be used as well as outlining installation materials and procedure. Include procedures for containment and disposal of milling and sawcutting waste water.

1. The shop drawings do not require a full dimensional layout of the platform edges.

B. Product Data: Submit manufacturer's literature describing products and installation procedures. Include product data for adhesives and sealants.

C. Samples: Submit the following samples:

1. Samples of panels measuring at least 12 inches x 12 inches. Panel sample shall include longitudinal edge with integral flange and transverse ship-lap edges.
2. Samples of panels and sealant for verification of color match.

D. Samples for Verification Purposes: Submit panels of the kind proposed for use.

DocuSign Envelope ID: 330DEBD6-9A9E-4F34-BDCC-1AC1BAA701E9

E. Maintenance Instructions: Submit manufacturer's specified maintenance practices for each type of panel and accessory as required.

F. Quality Assurance Submittals:

1. Material Test Reports: Submit test reports from qualified independent testing laboratory indicating that materials proposed for use are in compliance with requirements and meet the properties indicated. Tests which indicate performance for the panels shall have been performed within 3 years of the Invitation to Bid.
2. Submit list of projects in California that successfully demonstrate the proposed products' durability and weatherability.

1.4 QUALITY ASSURANCE

A. Provide panels and accessories, including panel adhesive, fasteners, and sealants, shall be from a single source. Products shall have been in successful service for a period of five (5) years.

B. Installer’s Qualifications: Engage an experienced Installer certified in writing by panel manufacturer as qualified for installation, who has successfully completed panel installations similar in material, design, and extent to that indicated for Project. Only persons who are thoroughly trained and experience in the installation of the panels shall perform the work.

C. Provide services of manufacturer's field representative who shall be present at all times during installation.

1.5 DELIVERY, STORAGE AND HANDLING

A. Panel type shall be identified by part number on packages.

1.6 SITE CONDITIONS

A. Environmental Conditions and Protection: Conduct field operations only when environmental conditions fall within those recommended by manufacturers of the products.

1.7 WARRANTY

A. Detectable warning tactile and curb ramp detectable warning surface shall be covered by a written warranty for a period of five years from date of final acceptance. The warranty includes defective work, breakage, and deformation, delamination, fading and chalking of finishes, and loosening of tactiles. Warranty shall include furnishing new materials, removal of existing tactiles, and installation of new tactiles.

1.8 EXTRA STOCK

A. Furnish not less than five (5) percent additional panels of the total amount installed of each panel and corresponding fasteners. Deliver extra stock to location (within 30 mile radius of work site) designated by the Engineer. Furnish extra stock materials from same manufactured lot as materials installed and enclose in protective packaging with appropriate identification.

PART 2 - PRODUCTS

2.1 PANELS

A. Manufacturers: Subject to conformance with the requirements of this Section, use products fabricated by the following manufacturers or equal:

1. Transit-Tile of Boulder, CO
2. Armor-Tile by Engineered Plastics, Inc. of Williamsville, NY

DocuSign Envelope ID: 330DEBD6-9A9E-4F34-BDCC-1AC1BAA701E9

3. ADA Solutions, Inc. of North Billerica, MA

B. Detectable warning tactile and curb ramp detectable warning surface shall be homogenous glass and carbon reinforced composite or an epoxy polymer composition which is colorfast and UV stable. Color shall be homogenous throughout tactile. Color shall be Federal Yellow.

C. Truncated Dome Geometry:

1. Truncated dome surface shall comply with ADA and ABA guidelines, 705, Detectable Warnings. (Title 49 CFR Transportation, Part 37.9 Standards for Accessible Transportation Facilities, Appendix A, Section 4.29.2 - Detectable Warnings on Walking Surfaces).
2. Truncated Dome Description:
   a. Staggered Dome and In-Line Patterns: The truncated dome shall measure a nominal 0.45 inch diameter at the top of the truncated dome, 0.90 inch diameter at the base of the truncated dome, 0.20 inch high, and 2.35 inch on center, staggered or in- line pattern.
   b. In order to ensure a uniform appearance of the detectable warning surface throughout the transit system, equivalent facilitation findings or alternate patterns will not be acceptable.
3. Truncated dome pattern shall align properly from Tactile to Tactile.

D. Panel Configuration:

1. Standard Detectable Warning Tactile - Butt Joint, Staggered Truncated Domes: Nominal 24 inches x 48 inches x 3/8 inches thick with a 7/16- inch thick deep flange along both 4 foot sides unless noted otherwise on the Contract 0rawings. The perimeter of the standard panel features a chamfer (no 90 degree return).
2. The detectable warning tactile shall feature a butt joint detail from tactile to tactile. Alternatively a ship lap detail may also be furnished.

E. Fastener Holes in the Panel:

1. Holes for fasteners shall be formed in the factory. Holes for fasteners, whether made in the factory or in the field, shall be located only at the centers of the truncated domes.

F. Detectable warning tactile and curb ramp detectable warning surface comply with the following performance characteristics. Alternatively, products complying with the performance characteristics specified in Section 09614, Detectable Guide Tactile, will be acceptable if the panel configuration described in this Section is furnished.

Property	ASTM Test Method	Nominal Value
Accelerated Weathering (3,000 hours)	G26	Delta E maxd. Of20
Chemical Resistance	01308	No Stain
Flexural Strength	0790	min. of 20,000psi
Compressive Strength	0695	min of 20,000psi
Tensile Strength	0638	min of 10,000psi
Gardner Impact Test	05420	min. of 110 in-lb
Flame Spread	E84	FSI of less than 25 S0I of less than 150
Slip Resistance	C1028	min of 0.80
Wear Resistance	C501	min of 500

DocuSign Envelope ID: 330DEBD6-9A9E-4F34-BDCC-1AC1BAA701E9

Water Absorption (2 weeks)	0570	Less than 0.20%
Salt Spray (120 hours)	B117	No Change

2.2 ACCESSORIES

A. Fasteners for Concrete: Color matched nylon expansion sleeves with 1/4 inch diameter by 1-1/2 inches long stainless steel drive pins or as recommended by panel manufacturer for specific job conditions and accepted by the Engineer.

B. Adhesive: Type approved by the panel manufacturer.

C. Sealant: Urethane sealant of type approved by the panel manufacturer.

D. Backer Road: Acceptable to sealant manufacturer where required, such as at platform expansion joints.

PART 3 - EXECUTION

3.1 INSTALLATION

A. Apply adhesives, sealants and mechanical fasteners in strict accordance with the guidelines set by their respective manufacturers.

B. Utilize manufacturer-provided template to lay out area to receive tactiles.

C. Form recess for tactiles by either milling with diamond blade head or casting recess in place (at new paving) so that installed tactile will still flush relative to adjacent surface. Grind or form to the depth and width required by the approved shop drawings and manufacturer's instructions. Finish cast-in-place recess with equivalent of a light broom finish. When milled, substrate shall have a light ribbed finish.

D. Contain and remove slurry resulting from concrete milling and sawcutting. Do not wash slurry into track bed area.

E. For Tactiles with Recessed Flanges:

1. Utilize diamond bladed double headed wet saw to achieve parallel grooves to receive panels. Both sawcuts shall be made simultaneously from the same machine. Sawcut parallel to platform edge.
2. After sawcutting, vacuum and power wash surface with clean clear water, free from all dirt and debris. Visually inspect surface for obtrusions or foreign matter. If obtrusions are present, remove by grinding. Remove foreign matter by grinding or further washing, as appropriate.

F. Immediately prior to application of the setting adhesive, inspect surfaces to receive tactile to ensure that they are clean, dry, free of voids, curing compounds, projections, loose material, dust, oils, grease, sealers, and other contaminants. Verify that surfaces are structurally sound and that concrete has cured a minimum of 30 days. Obtain tactile manufacturer's representatives and Engineer's approval of surface preparation before installing panels.

G. Set tactiles and install fasteners in accordance with tactilel manufacturer’s instructions and as follows:

1. Wherever possible, install full size (uncut) tactiles. 0o not install tactile sections measuring less than 24 inches in length. Only cut tactiles where absolutely necessary.
2. Maintain gap between tactiles for expansion and contraction in accordance with manufacturer's instructions.
3. At platform expansion joints, cut tactiles on their short sides, finish cut edges smoothly, and lay tactiles with cut edges aligned with the edges of the substrate along the joints. Install fasteners on either side of the expansion joint at the time of initial installation. After a minimum of 4 hours, make a sawcut measuring 5/16 inch wide across the composite

DocuSign Envelope ID: 330DEBD6-9A9E-4F34-BDCC-1AC1BAA701E9

detectable warning tactile and fill with sealant. Make sawcut in the zone between truncated domes.

a. Where there is platform curvature, composite detectable warning tactiles shall be treated in a similar manner so that the joints remain uniform across the width of the joint between successive tactiles. However, in areas of platform curvature, the joint shall take on somewhat of a triangular configuration.

4. Cutting through tactile domes shall be kept to a minimum. Where less than half of the truncated dome remains, grind off balance of dome; where over half of the truncated dome remains, feather dome so as not to present a tripping hazard.

H. Install sealant in accordance with manufacturer recommendations.

I. Installation of curb ramp detectable warning surface must comply with the manufacturer's recommendations.

3.2 CLEANING AND PROTECTING

A. After the area has been fully tactiled and sealant system applied, clean panel surface, following the manufacturer recommended maintenance and cleaning procedures.

B. Protect sealant and tactiles against damage during construction period. Comply with tactile and sealant manufacturers' recommendations.

C. Protect tactiles against damage from rolling loads following installation by covering with plywood or hardwood.

D. Clean and protect curb ramp detectable warning surface against damage following the manufacturer's recommendations.

END OF SECTION

DocuSign Envelope ID: 330DEBD6-9A9E-4F34-BDCC-1AC1BAA701E9

SECTION 99-323113

CHAIN LINK FENCES AND GATES

PART 1 – GENERAL

1.1 SECTION INCLUDES

A. Fencing and gate materials.
B. Concrete.
C. Fence and gate installation.
D. Electrical grounding.

1.2 FENCE AND GATE CLASSIFICATIONS AND STANDARDS

A. Fence Code: Type of fence, dimensions, components, gates, and accessories are indicated on the Contract Drawings in accordance with the "Fence Code" on the Civil Standard Drawings.

B. Fence Types: Chain link fencing shall be of the types indicated as follows:
   1. Type CL — Zinc-coated steel fence fabric with galvanized steel posts, rails, caps, hardware, and fittings.
   2. Type VCL — Polyvinyl chloride (PVC) coated steel fence fabric with vinyl-coated and factory-painted steel posts, rails, caps, hardware, and fittings in selected color.
   3. Type RP — Type CL fence with redwood slats or pickets inserted vertically in the fence fabric.

C. Gate Types: Gates shall be of the types listed below:
   1. Type Swing Gate — Galvanized steel posts as specified on the plans.
   2. Type Walk Gate — Zink coated steel fence fabric with galvanized steel posts, rails caps, hardware and fittings.
   3. Type Double Gate — Zink coated steel fence fabric with galvanized steel posts, rails caps, hardware and fittings.

D. Fence Fabric Standard Size: No. 11 or No. 12 gage chain link steel wire woven into 1 inch diamond mesh.

E. Area Fence Standards:
   1. Fencing: Materials, dimensions, and components of fencing are indicated on the Contract Drawings by means of a "Fence Code." If no code is indicated, the fence shall be galvanized chain-link fabric, posts, and accessories, as follows: fabric shall be 84 inches wide, secured at the top and bottom to tension wire, with three strands of barbed wire carried on extension arms above the fabric for an additional 12 inches, for a total height above ground of 96 inches.
   2. Substation Yard Fencing: Materials, dimensions, and components of the fencing are indicated on the Contract Drawings. The fence shall be galvanized chain-link fabric, posts, and accessories, as follows: fabric shall be 96 inches wide, secured at the top and bottom to galvanized pipe rail, plus three strands of barbed wire carried on extension arms above the top rail, for a total height of 108 inches above ground.

1.3 REFERENCES

A. American Society for Testing and Materials (ASTM):

DocuSign Envelope ID: 330DEBD6-9A9E-4F34-BDCC-1AC1BAA701E9

1.	ASTM A53	Specification for Pipe, Steel, Black and Hot-Dipped, Zinc-Coated, Welded and Seamless
2.	ASTM A121	Specification for Zinc-Coated (Galvanized) Steel Barbed Wire
3.	ASTM A123	Specification for Zinc (Hot-Dip Galvanized) Coatings on Iron and Steel Products
4.	ASTM A153	Specification for Zinc-Coating ((Hot-Dip) on Iron and Steel Hardware
5.	ASTM A392	Specification for Zinc-Coated Steel Chain-Link Fence Fabric
6.	ASTM A491	Specification for Aluminum-Coated Steel Chain-Link Fence Fabric
7.	ASTM A526	Specification for Steel Sheet, Zinc-Coated (Galvanized) by the Hot-Dip Process, Commercial Quality
8.	ASTM A569	Specification for Steel, Carbon (0.15 Maximum, Percent), Hot-Rolled Sheet and Strip Commercial Quality
9.	ASTM A752	Specification for General Requirements for Wire Rods and Coarse Round Wire, Alloy Steel
10.	ASTM A824	Specification for Metallic-Coated Steel Marcelled Tension Wire for Use with Chain Link Fence
11.	ASTM B117	Method of Salt Spray (Fog) Testing
12.	ASTM F567	Practice for Installation of Chain-Link Fence
13.	ASTM F626	Specification for Fence Fittings
14.	ASTM F668	Specification for Poly (Vinyl Chloride) (PVC)-Coated Steel Chain-Link Fence Fabric
15.	ASTM F900	Specification for Industrial and Commercial Swing Gates
16.	ASTM F934	Specification for Standard Colors for Polymer Materials Coated Chain-Link Fence
17.	ASTM F1083	Specification for Pipe, Steel, Hot-Dipped Zinc-Coated (Galvanized) Welded, for Fence Structures

B. Chain Link Fence Manufacturers Institute (CLFMI): CLFMI Publication, "Standards for Chain Link Fence Installation"

C. Federal Specifications:

1.	RR-F-191/2C	Fencing, Wire and Post, Metal (Chain Link Fence Gates) (Detail Specification)
2.	RR-F-191/4C	Fencing, Wire and Post, Metal (Chain Link Fence Accessories) (Detail Specification)

1.4 SUBMITTALS

A. General: Refer to Section GC-43 Submittal of Shop Drawings, Product Data and Samples, for submittal requirements and procedures.

B. Product Data: Submit manufacturer's product data and specifications of the specified chain link fencing and gates.

C. Shop Drawings: Submit detailed Shop Drawings of the fences and gates layout, including installation details of the fencing, posts, gates, hardware, and accessories for review.

D. Samples: If PVC-coated fencing is indicated or specified, submit manufacturer's color chart of available colors and physical sample of selected color.

PART 2 – PRODUCTS

2.1 MATERIALS

DocuSign Envelope ID: 330DEBD6-9A9E-4F34-BDCC-1AC1BAA701E9

A. Requirements: Fencing shall include fabric covering, framework, barbed wire and supporting arms, concrete footings, gates, hardware, and all appurtenances and accessories as required for a complete installation. Heights of fences shall be as indicated. When not indicated, line fencing and substation fencing shall conform with the Area Fence Standards specified herein in Article 1.03.

B. Fence Fabric:

1. Type CL Fence Fabric: Zinc-coated steel fabric conforming to ASTM A392 with Class 2 coating. Mesh size 1-inch square fabricated from No. 11 or No. 12 gage wire.
   a. The Contractor may furnish aluminum-coated steel fence fabric conforming to ASTM A491, with 1-inch square mesh size fabricated from No. 11 or No. 12 gage wire.
2. Type VCL Fence Fabric: Type CL fence fabric, PVC-coated in accordance with ASTM F668. Class 1, Class 2a, and Class 2b wire and fabric types are acceptable. Mesh size 1-inch square fabricated from No. 11 or No. 12 gage wire. Color shall be as selected by the Engineer from manufacturer's standards, as specified in ASTM F934.
3. Type RP Fence Fabric: Type CL fence fabric with California redwood slats or pickets inserted vertically through the mesh pattern. Redwood fence slats or pickets shall be nominal 2-1/2 inches by 3/8 inch in size, and shall have stain applied to all surfaces in color as selected by the Engineer. Slats shall be one piece, full height of fence fabric.
4. Selvages: Twisted and barbed at top and bottom selvages when barbed wire is used; knuckled at both selvages when barbed wire is not used; unless otherwise indicated.

C. Pipe Framework for Type CL and RP Fencing: Posts and rails shall be standard weight galvanized steel pipe conforming to ASTM F1083. Sizes and weights shall be as follows:

1. End and Corner Posts: Minimum nominal outside diameter of 2.875 inches, weighing not less than 5.79 pounds per linear foot, for end, corner, and gate posts for gates 6 feet wide and smaller. Gate posts for gate leaves from 6 feet to 13 feet wide shall have minimum nominal outside diameter of 4.000 inches, weighing 9.11 pounds per linear foot.
2. Line Posts: Nominal outside diameter of 2.375 inches, weighing not less than 3.65 pounds per linear foot.
3. Rails and Braces: Nominal outside diameter of 1.660 inches, weighing not less than 2.27 pounds per linear foot. Posts shall include galvanized bolted fittings to properly secure rails and braces to posts.

D. Alternate Pipe Framework for Type CL and RP Fencing:

1. Pipe for Posts and Rails: Posts and rails shall be high-strength pipe manufactured from steel conforming to ASTM A569, cold-formed, high frequency or induction welded, and having a minimum yield strength of 50,000 psi.
2. End and Corner Posts: Minimum nominal outside diameter of 2.875 inches, weighing not less than 4.64 pounds per linear foot, for end, corner, and gate posts for gates 6 feet and smaller. Gate posts for gate leaves from 6 feet to 13 feet wide shall have minimum nominal outside diameter of 4.000 inches, weighing not less than 6.56 pounds per linear foot.
3. Line Posts: Nominal outside diameter of 2.375 inches, weighing not less than 3.12 pounds per linear foot.
4. Rails and Braces: Nominal outside diameter of 1.660 inches, weighing not less than 1.84 pounds per linear foot. Posts shall include galvanized bolted fittings to properly secure rails and braces to posts.
5. External Pipe Coating: External surface shall be triple coated with 1.0 ounce plus or minus 0.1 ounce of zinc per square foot, 30 plus or minus 15 micrograms of chromate per square inch, and a high-performance polymer. Pipe shall demonstrate the ability to resist 1,000 hours of exposure to salt spray with a maximum of five percent red rust when tested in accordance with ASTM B117.

DocuSign Envelope ID: 330DEBD6-9A9E-4F34-BDCC-1AC1BAA701E9

6. Internal Pipe Coating: Internal surface of pipe shall be coated, after welding, with a zinc-rich based organic coating having a 91 percent zinc powder loading capable of withstanding 650 hours of exposure to salt fog with a maximum of five percent red rust when tested in accordance with ASTM B117. All coatings shall be applied inside and out after welding.

E. Pipe Framework for Type VCL Fencing: Post and rails shall be vinyl-clad steel with color-coated EMV (epoxy modified polyvinyl chloride) chemically bonded to heated standard weight ASTM F1083 galvanized steel pipe, as specified, by electrostatically applied powder coating process. Protective vinyl coating thickness shall be 10 to 14 mils, according to pipe diameter. Pipe vinyl coating shall have the following properties: specific gravity of 1.32 to 1.37; tensile strength of 2,000 psi; minimum elongation of 180 percent; tear strength at 15 mils -0.36 pounds per mil; hardness of coating of 87 to 92 Shore A Durometer. Color shall match fence fabric color. Sizes and weights shall be as specified for Type CL fence or alternate high-strength pipe framework.

F. Tension Wire: Tension wire for top and bottom edge support of fence fabric shall be No. 7 gage steel wire, conforming to ASTM A824, Class 3, with minimum tensile strength of 80,000 psi, zinc-coated wire with zinc coating of not less than 0.80 ounce per square foot. For type VCL fencing, provide tension wire coated with PVC, matching fence fabric in color.

G. Post Caps and Fittings: Manufacturer's standard, pressed steel or malleable iron post caps, fittings, and accessories, meeting requirements of ASTM F626 and Federal Specification RR-F-191/4C, galvanized for Type CL and RP fencing, and PVC coating by the thermal-fusion-bond process, in color matching posts, for Type VCL fencing. Post caps shall be designed to fit securely over the posts to exclude water and to carry the top pipe rail and extension arms, where indicated. All other required fittings and hardware shall be provided to fasten to the pipe posts or concrete in the manner indicated.

H. Truss Rods: Alloy steel rods conforming to ASTM A752, with minimum tensile strength of 80,000 psi, and minimum diameter of 5/8 inch. Provide rods with threaded ends and self-tightening galvanized turnbuckles and anchor plates. Secure anchor plates to posts and gate frames by welding.

I. Stretcher Bars: Provide one-piece lengths equal to full height of fabric with a minimum cross-section of 1/4 inch by 3/4 inch. Provide one stretcher bar for each gate and end post, and two for each corner and pull post.

J. Stretcher Bar Bands: Provide galvanized heavy pressed steel or malleable iron bands with a minimum cross section of 1/8 inch by 3/4 inch, spaced not over 15 inches on center, to secure stretcher bars to end, corner, pull, and gate posts.

K. Accessories: Provide miscellaneous materials and accessories, clips, tie wires (9 gage), anchors, and fasteners as required for a complete installation. All items shall be galvanized in accordance with ASTM A123 or ASTM A153 as applicable. Accessories for Type VCL fencing shall be vinyl-coated or painted to match color of fence fabric.

L. Barbed Wire Extension Arms: Pressed steel conforming to ASTM A526, hot-dip galvanized after fabrication, complete with provision for anchorage to end, corner, and pull posts and for attaching three rows of barbed wire to each arm. Arms shall be 45-degree angle or vertical as indicated, for three strands of barbed wire. Arms shall be integral with post top weather cap. Intermediate arms shall have hole for passage of top tension wire. Arms shall be capable of withstanding 300 pounds downward pull at outermost end of arm without failure. Arms for Type VCL fencing shall be vinyl-coated or painted to match color of fence fabric.

M. Barbed Wire: Two-strand, zinc-coated, 12-1/2 gage steel wire with 14 gage, 4-point steel barbs spaced 5 inches apart, conforming to ASTM A121. Zinc coating shall be Class 3, 0.80 ounce per square foot for 12-1/2 gage wire and 0.65 ounce per square foot for 14-gage wire.

N. Gates: Gates shall be swinging type or sliding type as indicated, furnished complete with all hardware and accessories as required for a complete installation.

DocuSign Envelope ID: 330DEBD6-9A9E-4F34-BDCC-1AC1BAA701E9

1. Gate Frames: Frames shall be fabricated from zinc-coated steel pipe members (to match posts in Type CL and RP fencing) having a minimum outside diameter of 1.900 inches and weighing not less than 2.72 pounds per linear foot.
2. Fabrication: Conform to applicable requirements of ASTM F900, Federal Specification RR-F-191/2C, and the following:
   a. Assemble gate frames by welding or with fittings and rivets for rigid connections. Use same fabric as for fence. Install fabric with stretcher bars at vertical edges, and tie wires at top and bottom edges. Attach stretcher bars to gate frame at not more than 15 inches on center. Attach hardware with rivets or by other means that will provide security against removal or breakage.
   b. Provide additional horizontal and vertical members to ensure proper gate operation and for attachment of fabric, hardware, and accessories.
   c. Provide diagonal cross bracing consisting of minimum 1/2-inch diameter adjustable length truss rods on gates where necessary to provide frame rigidity without sag or twist.
   d. For Type VCL fencing, gate components shall be PVC-coated or painted in color matching fence fabric.
3. Gate Hardware:
   a. Swinging Gates: Provide gate hinges, latch, stop, and keeper for each gate leaf, conforming to applicable requirements of ASTM F900 and Federal Specification RR-F-191/2C. Provide latch with provision for locking gate with padlock.
   b. Sliding Gates: Provide manufacturer's standard rubber-tired rollers and roller track for floor-supported sliding gates. Include intermediate rollers or casters where required to prevent gate sag or deflection. Provide locking device and padlock eyes as part of latch for locking gate with padlock.

O. Pipe Sleeves: Pipe sleeves for fence post embedment in concrete curbs, barriers, and walls shall be fabricated from steel pipe conforming to ASTM A53 and galvanized in accordance with ASTM 123, sized to receive and support fence posts.

2.2 CONCRETE

A. Provide concrete footings for fence posts under this Section. Concrete for posts shall have a minimum compressive strength at 28 days of 3,000 psi, using 1-inch maximum size aggregate and five sacks of cement minimum per cubic yard, with a maximum slump of 4 inches. Concrete, placing, and curing shall conform to the applicable requirements of Section 99-033000, Cast-In-Place Concrete.

PART 3 – EXECUTION

3.1 PREPARATION

A. Installation of fencing shall not be started until final grading has been completed.
B. Locate fencing correctly as indicated.
C. Where posts are indicated or required to be embedded or set in concrete curbs, traffic barriers, or retaining walls, coordinate the installation of fencing closely with the installation of concrete as specified under Division 3 Concrete.
D. Furnish galvanized steel pipe sleeves for fence posts, as applicable, for installation in formwork at time required. Supervise installation of sleeves during formwork and placing of concrete to maintain exact dimensions according to template.

DocuSign Envelope ID: 330DEBD6-9A9E-4F34-BDCC-1AC1BAA701E9

3.2 INSTALLATION

A. Install fencing and gates as indicated, in accordance with approved Shop Drawings, and applicable requirements of ASTM F567 and CLFMI Standards for Chain Link Fence Installation. Site fabricate as required to complete the fence installation.

B. Posts shall be plumb and rigid after installation. Rails shall be straight and tight. Chain link fabric shall be smooth and uniformly stretched tight and straight. Tension wires and barbed wires shall be pulled taut. Redwood slats in Type RP fence shall be straight and plumb.

C. Drill holes for post footings in firm, undisturbed or compacted soil. Footing holes shall be not less than 9 inches in diameter and 38 inches in depth. Post embedment in concrete shall be 36 inches. Excavate deeper as required for adequate support in soft and loose soils, and for posts with heavy lateral loads.

D. Where posts are indicated or required to be embedded or set in concrete curbs, traffic barriers, or retaining walls, grout or seal posts in sleeves as indicated.

E. Gates shall be installed plumb, level, and secure for full opening without interference. Install ground-set items in concrete for anchorage as recommended by the fence manufacturer. Adjust hardware for smooth operation and lubricate. Sliding gates shall operate smoothly and easily under minimum pressure.

F. Locate and install safety and restriction signs securely as indicated on the Contract Drawings.

3.3 CONCRETE

A. Handling and placing of concrete shall conform to the applicable requirements of Section 99-033000, Cast-In-Place Concrete.

B. Place concrete around posts in a continuous pour. Check each post for plumb and vertical and top alignment, and hold in position during placement and finishing operations.

C. Trowel finish tops of footings, and slope or dome to direct water away from posts. Set keepers, stops, sleeves, tracks, eye bolts, and other accessories into concrete as required. Wheel rolling area for sliding gates shall be steel-trowel smooth finish concrete.

END OF SECTION

DocuSign Envelope ID: 330DEBD6-9A9E-4F34-BDCC-1AC1BAA701E9

SECTION 99-330525

SUPPORT AND PROTECTION OF UTILITIES

PART I – GENERAL

1.1 SECTION INCLUDES

A. This Section includes specifications for maintenance, support, and protection of existing underground utilities as indicated.

1.2 REQUIREMENTS

A. Locate existing utilities from official county and municipal maps and records. Maintain existing utilities and protect from damage as necessary to satisfy the requirements of jurisdictional utility companies and related codes and regulations.

B. Do not disconnect or shut down any part of the existing utilities and services, except by permission of authorities having jurisdiction. Submit schedule of estimated shut-down time in order to obtain such permission, and notify all interested parties, neighbors, utilities, and municipal and county authorities, as required.

C. Utilities to be removed shall not be removed until shut-down time can be kept to a minimum. Do not remove an existing utility line or service until the replacement line, crossover, or capping is ready to be performed.

D. Provide shoring, underpinning, and structural support for existing utility lines and structures that become suspended or otherwise unsupported because of adjacent excavation operations.

1.3 REQUIRED NOTIFICATIONS

A. Underground utilities shall be marked for identification by the affected utility companies 72 hours prior to performing any excavation or other work close to any underground pipeline, conduit, duct, wire, or other structure. The Contractor shall notify the Engineer and utility owners before performing any such excavation work. Notify most affected utilities by calling Underground Service Alert (USA) at 1-800-642-2444. Contact utility owners not covered by USA, such as owners of non-pressurized sewer lines and Caltrans, by calling the affected utility owners directly.

B. Protect active underground utilities from damage. If underground utilities are damaged in any way, notify the Engineer and affected utilities immediately for corrective action. The names of the utility companies in the area and their respective addresses and telephone numbers are specified in the Contract Specifications, Section 99-330525 - Support and Protection of Utilities.

1.4 RELOCATION OF EXISTING UTILITIES

A. It is anticipated that certain utilities will be relocated by the affected utility companies prior to start of construction. The names and addresses of such utility companies, including a list of facilities to be relocated with description and location, are specified in the Contract Specifications, Section 99-330525 - Support and Protection of Utilities.

PART 2 – PRODUCTS

Not Used

PART 3 – EXECUTION

DocuSign Envelope ID: 330DEBD6-9A9E-4F34-BDCC-1AC1BAA701E9

Not Used

END OF SECTION

DocuSign Envelope ID: 330DEBD6-9A9E-4F34-BDCC-1AC1BAA701E9

SECTION 99-330528

TRENCHING AND BACKFILLING FOR UTILITIES

PART 1 - GENERAL

1.1 SECTION INCLUDES

A. Bedding and Backfilling materials.
B. Staking and grades.
C. Existing Utilities.
D. Trenching and excavating.
E. Bedding and backfilling
F. Trench borrow backfill with or without AC paving
G. Field quality control

1.2 DESCRIPTION

A. This section includes the requirements for excavating, trenching, backfilling and borrow backfilling with or without AC paving for installation of new utilities, pipe casings, and related structures, as indicated, including utility manholes and concrete encasement.
B. Trenching and backfilling and borrow backfilling with or without AC paving for utilities include restoration of existing facilities, where applicable, to the existing condition prior to excavation.

1.3 RELATED SECTIONS

C. Section 99-310000, Earthwork
D. Section 99-321216, Asphalt paving
E. Section 99-330525, Support and Protection of Utilities
F. Section 99-330535, Protection, Removal and Abandonment of Utility Pipes

1.4 REFERENCE STANDARDS

A. American Society for Testing Materials (ASTM):
   1. ASTM C33 Specification for Concrete Aggregates
B. City of Fairfield Standard Drawings and Specifications
C. AREMA Trench and Backfill Requirements
D. Union Pacific Railroad (UPRR) Trench and Backfill Requirements
E. Borrow backfilling with or without AC paving

1.5 REGULATORY REQUIREMENTS

A. Regulatory requirements, which govern the work of this Section, include the following governing codes:
B. California Code of Regulations (CR), Title 8, Chapter 4, Subchapter 4 - Construction Safety Orders, and Subchapter 19 – Trench construction Safety Orders, for trench excavations of 5 feet or more in depth.
C. California Code of Regulations, title 24, Part2, California Building Code, Chapter 33, and Appendix Chapter 33, Excavation and Grading, for protection of the public.

DocuSign Envelope ID: 330DEBD6-9A9E-4F34-BDCC-1AC1BAA701E9

1.6 SUBMITTALS

A. General: Refer to SC-6, Contract Data Requirements, and GC-43, Submittal of Shop Drawings, Product Data and Samples, for submittal requirements and procedures. Submittals for trenches of 5 feet or more in depth shall be submitted to the Engineer for review and approval.

PART 2 - PRODUCTS

2.1 BEDDING AND BACKFILLING MATERIALS

A. Bedding: Unless specified otherwise by public utility owners in their respective Standard Documents, the bedding material shall be:

B. Sand: Sand for bedding of pipe in utility trenches shall be a clean and graded, washed sand, all passing No. 4 U.S. Standard sieve, and conforming generally to ASTM C33 for fine aggregate. Finer sand may be used, if convenient, provided the sand is clean and does not contain deleterious substances in excess of the amounts specified in ASTM C33, Table 3.

C. Only sand will be permitted for bedding of concrete pipe, clay pipe, and cast-iron pipe.

D. Pea Gravel: Clean and graded, washed river-run gravel, ASTM C33, Size No. 7. Pea gravel may be used in trenches requiring additional drainage and for backfilling above the pipe's upper half (above the horizontal centerline).

E. Backfill Material: Backfill for excavations and trenched under structures shall be Structural Fill as indicated. Conform to Section 99-310000, Earthwork. Common fill will be permitted only for backfilling of excavations and trenches in open areas and landscaped areas, conforming to the requirements of public utility owners for their respective utilities. Backfill under UPRR railway tracks for track restoration shall conform to the requirements of UPRR.

F. Borrow backfill: Imported borrow backfill with or without AC paving shall conform to Section 19-7.02 of Caltrans Standard Specifications. The imported borrow shall be of a quality suitable for the purpose intended, free of organic matter or other unsatisfactory material. The contractor shall notify the Engineer of the material sites so that the stripping materials may be taken and the material may be tested.

G. Slurry Cement Backfill: Slurry cement backfill shall consist of a fluid, workable mixture.

H. Filter Fabric: Geotextile engineering fabric shall conform to Caltrans Standard Specifications.

PART 3 - EXCAVATION

3.1 STAKING AND GRADES

A. Staking and grades for trench location shall conform to the requirements of Section 99-310000, Earthwork.

3.2 EXISTING UTILITIES

A. Contractor shall conform to the requirements of Section 99-330525, Support and Protection of Utilities when excavating area adjacent to or below the existing utilities. Damaged utilities due to Contractor's negligence shall be repaired or replaced at Contractor's cost.

3.3 TRENCHING AND EXCAVATING

A. Comply with CCR, Title 8, Trench Construction Safety Orders, and the California Building Code, Chapter 33 and Appendix Chapter 33, as applicable.

B. The work of this Section shall conform to the requirements of Section 99-310000, Earthwork, as applicable. Contractor shall also conform to the applicable jurisdictional agencies requirements

DocuSign Envelope ID: 330DEBD6-9A9E-4F34-BDCC-1AC1BAA701E9

for trenching and backfilling. If conflicting requirements occur, the most stringent requirements apply.

C. Perform trenching and excavating as indicated and required for utility piping, casings and related structures, and provide shoring, bracing, pumping, and planking as required and as specified in Section 99-315000, Excavation Support and Protection.

D. Excavate to the lines and grades indicated. Field verify location and depth of existing utilities prior to work requiring casing installation work. Over excavation will not be allowed or paid for, and shall be restored as directed by the Engineer at Contractor's cost.

E. Excavate trenches for pipes and pipe casing by the open-cut method, except where jacking and boring operation is indicated. Hand-excavate for crossing or longitudinal pipelines or utility structures located within 3 feet to any existing structures.

F. In paved areas, cut pavement along the neat lines at the width indicated for the trench. Pavement shall be sawcut at full depth. After compacting the backfill, restore pavement to a condition equivalent to that existing at the start of construction.

G. Excavate trenches to the indicated width as all points below a horizontal plane 2 feet above the top of the pipe. Excavation above this plane may exceed the indicated width as required. Where the width is not indicated, make the width not less than 6 inches nor more than 18 inches from the outside wall of the new pipes, or pipe casings if the casings are to be installed.

H. The bottom of excavations shall be firm, undisturbed earth or cut subgrade, clean and free from loose material, debris, and foreign matter. When bottoms of excavations or trenched are a soft or unstable material, the bed shall be made firm and solid by removing said unstable material to a sufficient depth and replacing same with sand or pea gravel, compacted to at least 90 percent relative compaction.

I. Bell holes shall be accurately placed and shall not be larger that required to make the joint.

3.4 BEDDING AND BACKFILLING

A. Provide firm and uniform support of piping at indicated elevations and grades. Carefully tamp bedding material as required for firm support.

B. Backfill below the horizontal centerline of pipe shall be sand, unless specified otherwise in the Contract Plans. Backfill to 6 inches above the top of pipe from the centerline of pipe shall be the herein specified, as applicable, or as required by the public utility owners.

C. Backfill shall be placed in 6-inch layers, leveled, rammed, and tamped in place. Each layer shall be compacted with suitable compaction equipment, taking care not to damage or misalign any pipe. Compact backfill to at least 90 percent relative compaction in open areas and 95 percent compaction under structures or track ballasts.

D. Backfilling around concrete structures and for duckbanks and similar utilities shall conform to the applicable requirements of section 99-310000, Earthwork.

E. The imported backfill shall be placed and compacted to designated dimensions as specified in Section 19-1.03 of the Caltrans Standard Specifications.

F. The Asphalt paving on imported backfill shall conform to 99-321216, Asphalt Concrete.

3.5 FIELD QUALITY CONTROL

A. Comply with applicable requirements specified in Section 99-310000 Earthwork.

END OF SECTION

DocuSign Envelope ID: 330DEBD6-9A9E-4F34-BDCC-1AC1BAA701E9

SECTION 99-330535

PROTECTION, REMOVAL AND ABANDONMENT OF UTILITY PIPES

PART 1 – GENERAL

1.1 DESCRIPTION

A. Work in this section consists of installation of new casing pipes, and removal and abandonment of existing utility pipes and facilities. All work will be performed at the locations and limits as shown on the plans and as directed by the Engineer.

B. This section includes the requirements for the following work;

1. Provide protection to existing public and private utilities that cross the proposed reinforced concrete box installation by installing a split steel casing and concrete encasement of utility pipes.

1.2 RELATED SECTIONS

A. SC-6, Contract Data Requirements
B. SC-9, Delivery, Loading and Storage
C. SC-10, Work Sequence Constraints
D. SC-14, Hazardous Materials
E. GC-34, Contractor's Work Area
F. GC-43, Shop Drawings Product Data and Samples
G. GC-44, Survey Requirements
H. GC-51, Disposal of Materials
I. GC-52, Protection of Completed Portions of Work
J. GC-53, Cleanup
K. GC-67, Differing Site Conditions
L. GC-74, Warranty Work and Warranty
M. Section 99-024100, Demolition
N. Section 99-310000, Earthwork
O. Section 99-330525, Support and Protection of Utilities
P. Section 99-330528, Trenching and Backfilling for Utilities

1.3 REFERENCES

A. American Society for Testing Materials (ASTM):

1. ASTM A 139 Grade B, Specification for Split Steel Casings

1.4 REGULATORY REQUIREMENTS

A. Regulatory requirements, which govern the Work of this Section, include the following governing codes:

1. California Code of Regulations (CR), Title 8, Chapter 4, Subchapter 4 - Construction Safety Orders, and Subchapter 19 – Trench construction Safety Orders, for trench excavations of 5 feet or more in depth.
2. California Code of Regulations, Title 24, Part 2, California Building Code, Chapter 33, and Appendix Chapter 33, Excavation and Grading, for protection of the public.
3. Alameda County Flood Control – Water Conservation District.
4. Regional Water Quality Control Board.
5. Alameda County Water District.

DocuSign Envelope ID: 330DEBD6-9A9E-4F34-BDCC-1AC1BAA701E9

1.5 SUBMITTALS

A. General: Conform to SC-6, Contract Data Requirements and GC-43, Shop Drawings, Product Data, and Samples for submittal requirements and procedures.

B. Product data: Submit manufacturer's product data for pipe casings (including hardware, angles, joints, clamps), casing seals, bedding, backfill and grouting materials.

C. Shop drawings: Shop drawings shall conform to the submittal requirements of the public utility owners, and this Section.

1. Provide shop drawings and written procedures describing in detail, the proposed method of installation and placement of the pipe casings, Contractor's plan to prevent "freezing," and methods of preventing pipe floatation and terminating grouting at the end of the casing.
2. Provide shop drawings and written procedures describing in detail, the proposed method of removal and abandonment of existing longitudinal and transverse utility pipes, including utility supports and trench excavation, protection to existing structures, shoring and sheeting, capping and sealing existing facilities to remain in place, trench restoration, and any other work related to removal and abandonment work.
3. Shoring and bracing plans, calculations and details prepared by a Civil or Structural Engineer licensed in the State of California.
4. Utility support details including support block, bracing to prevent pipe shifting or floatation, across or parallel to trench.
5. Excavation supports at open trench areas, and shall conform to Section 99-330525, Support and Protection of Utilities.
6. Detailed locations, sizes, and depths of all open trench, pipe installation and backfill methods and procedures.

D. Permits: Submit approved open trench permits from respective public utility owners.

E. Qualification Personnel: Submit, 5 calendar days after notice of award, the name of the Split Casings and Open Trench subcontractor and the Project Superintendent with their qualifications and resume meeting the minimum requirements specified in these Technical Specifications for review and approval. No open trench work will proceed until the Owner approves the subcontractor and the Project Superintendent.

F. Survey Data: Submit survey data obtained by a Surveyor licensed in the State of California.

G. Schedules: Pipe installation schedule that include schedules of excavation and backfill operations.

H. Specifications: Provide specifications of equipment to be used for each type of operation.

I. Samples: Cut sheets of products to be used.

J. Quality assurance/control submittals

1. Methods of Installation
   a. Trenching and Backfilling Operation
2. Test reports: Welding
3. Certificates: Provide certificate of compliance for pipe casings, hardware or accessories, casing seals, bedding and backfill materials.
4. Manufacturer's instructions: Provide manufacturer's installation procedures for each specified product to be used.
5. Safety and Worker's Protection: Conform to SC-13 Worker's Safety Provisions.

K. Closeout Submittals: Conform to GC-63 Project Records.

L. MCI/Verizon temporary relocation plan: Contractor shall submit a plan and design for spanning the Warren Ave. excavation during construction.

DocuSign Envelope ID: 330DEBD6-9A9E-4F34-BDCC-1AC1BAA701E9

1.6 QUALITY ASSURANCE

A. Quality assurance shall conform to Section SC-33 Quality Assurance Program.

1.7 DELIVERY, STORAGE AND HANDLING

A. Delivery, storage and handling shall conform to SC-9, Delivery, Unloading and Storage requirements and GC-51, Disposal of Materials, for disposal of materials. Disposal of hazardous soils and materials shall conform to GC-9, Hazardous Materials or Unusual Conditions.

1.8 PROJECT SITE CONDITIONS

A. Jobsite requirements: Refer to Geotechnical Report for soil boring information. Excavations in which products will be buried shall be dry.

B. Existing conditions: Refer to GC-44, Survey Requirements and GC-67, Differing Site Conditions and Section 99-023000, Subsurface Investigation. Conform to Section 99-312319, Dewatering, Section 99-024100, Demolition and Section 99-310000, Earthwork.

C. Coordinate with and obtain permit from jurisdictional utility owner for use of water supply during construction. Payment associates with acquiring water for construction use shall be at Contractor's cost.

D. Dewatering shall conform to the following:

1. The Contractor shall obtain written approval of all de-watering operations (De-Watering Operations Plan) from Engineer prior to the start of these operations. The Contractor shall provide to Engineer a written dewatering plan which includes an estimate of the duration and quantity of the water to be removed during the de-watering operation. Sediment traps, sediment basins, or banker tanks shall be utilized to remove settleable solids from the water prior to disposal. Further filtration of the water following the use of sediment traps, sediment basins, or banker tanks may be required as directed by Engineer at the Contractor's expense. The plan shall also include details on the methods, equipment, and schedule (frequency) for testing of any water to be discharged to confirm that it meets requirements of these Contract Documents, State and Federal regulations, and the requirements of the Regional Water Quality Control Board.
2. The Contractor shall contact the Regional Water Quality Control Board at (510) 622-2438 for approval and to receive a permit for any groundwater pretreatment process where discharges to a storm drain, creek, or watercourse are proposed.
3. The Contractor shall contact the Union Sanitary District Environmental Compliance at (510) 477-7500 for approval and to receive a permit for any discharges into the sanitary sewer.
4. Water from de-watering operations may be disposed of into the City's storm drain system or sanitary sewer system with written approvals and/or permits from the utility owner or governing agency. Prior to disposal of any water from de-watering operations, the Contractor shall have the water analyzed by a qualified lab for the following constituent concentrations, and provide the lab results to Engineer.
5. The Contractor shall note that periodic discharges from rainfall, blow-offs, surface, subsurface, pipe leakage, and groundwater can be expected at any time of the year, and will need to be pumped out as needed.
6. The Contractor shall furnish and install all or any sheet piling required and any other devices necessary to remove encountered water. Groundwater shall be removed by suitable means approved by Engineer, will prevent the groundwater from softening the trench bottom prior to backfilling with backfill material.

E. Trench and Backfill: Refer to the requirements of jurisdictional agencies.

DocuSign Envelope ID: 330DEBD6-9A9E-4F34-BDCC-1AC1BAA701E9

1.9 SCHEDULING

A. General

B. Coordination

1. The Contractor shall coordinate activities to assure efficient and orderly procurement, fabrication, construction, installation and testing/start-up of all parts of the work. This includes coordinating operations covered under different sections of the Contract Documents that are dependent on each other for proper installation and operation.
2. Where installation of one component depends on installation of other components before or after its own installation, activities shall be scheduled in the most appropriate sequence to obtain the most satisfactory installation.
3. The Contractor shall coordinate scheduling and timing of administrative procedures with other activities to avoid conflicts and to ensure orderly progress. Such activities include, but shall not be limited to:
   a. Preparation of Construction Schedules.
   b. Preparation and processing of submittals.
   c. Attending Progress meetings.
   d. Coordinating Project closeout activities.

C. Scheduling:
The schedule shall conform to the requirements in SC-23, Progress Schedule.

1.10 WARRANTY

A. General: Warranty shall conform to GC-74, Warranty Work and GC-75 Warranty Replaced Parts.

1.11 MAINTENANCE AND WORK AREA

A. Work area and access: Contractor shall conform to GC-34, Contractor's Work Area. The Contractor shall not block any driveway or access to adjacent property owners or service road at any time during construction.

1.12 PROTECTION

A. Potholing:

1. The Contractor shall review available pothole information and field-verify all existing utilities within the limit of work (type, size, location and depth) prior to starting any excavation. The Contractor shall not proceed with underground installation until field verification related to existing utilities has been completed to the satisfaction of the Owner. The Contractor shall immediately notify the Owner of conflicts in which there is less than one foot of separation between the existing and proposed facility.
2. The Contract Plans may not show all existing utilities within the limit of work area. The Contractor may be required by Engineer to perform additional potholing to verify existing utilities not shown on the Contract Plans. The Contractor shall chronologically number each pothole and paint the number of the pothole onto the pavement adjacent to the pothole. The Contractor shall record the number of the pothole and identify the pothole by station offset, depth, and type of utility encountered. These notes shall be given to Engineer at the end of each day.
3. If existing utilities are not shown on the Contract Plans or not found to be within reasonable proximity as shown on the Contract Plans, the Contractor shall take all

DocuSign Envelope ID: 330DEBD6-9A9E-4F34-BDCC-1AC1BAA701E9

precautionary measures to protect existing facilities from damage and notify Engineer of his finding immediately.

4. The Contractor shall bear full responsibility for all damages by contractor's operation and costs of repairs to existing utilities. Should any such utility be damaged during construction, all expenses of the restoration of the utility to its original service shall be borne by the Contractor, and no additional compensation will be made.
5. Unless otherwise indicated on the Contract Plans or specified herein, the Contractor shall protect in place all water, gas and sewer lines; electrical, power and telephone conduits or structures; petroleum lines; utility service lines and other surface or subsurface structures of any nature that may be affected by the Work. If the Contractor fails to protect such facilities, the Owner reserves the right, if requested by the jurisdiction parties, to permit the jurisdiction parties to move or maintain the utility at the Contractor's expense. Should it become necessary in the performance of the Work to disconnect or reroute any underground utility due to a direct conflict with the new work, disconnection or rerouting will be paid for as extra work unless otherwise specified on the Contract Plans or Technical Specifications. If the utility is private-owned, it will be disconnected or rerouted by the private utility company involved.
6. The right is reserved by the Owner, and by owners of public utilities and franchises, to enter upon any road, right-of-way, or easement for the purpose of maintaining their property and making necessary repairs or changes caused by this work.
7. Backfill of potholes shall conform to Section 99-310000, Earthwork.

B. Trench Excavation and Protection: Conform the following:

1. The Contractor shall conform to the rules and regulations pertaining to construction safety established by the California Division of Industrial Safety (CAL-OSHA). The Contractor shall, before beginning any excavation or trench work 5 feet or more in depth, secure a permit "to perform Excavation or Trench Work" from the State of California, Division of Industrial Safety.
2. In order to receive a permit "to perform Excavation or Trench Work", the Contractor must submit a detailed plan showing his proposed design for shoring, bracing or other provisions to be made for worker protection from the hazard of caving ground during the excavation of any trench or trenches 5 feet or more in depth. If such plan varies from the shoring system standards established by the Construction Safety Orders, the plan shall be prepared by a registered Civil or Structural Engineer in the State of California.
3. The Contractor shall file a copy of the permit "to perform Excavation or Trench Work" with Engineer at least five (5) days before the beginning of any excavation or trench work.
4. The acceptance of the copy of the permit "to perform Excavation or Trench Work" shall in no way be construed to impose tort liability on the Owner, or any of its officers, employees or designated agents by reason of any damage to person, including death or property resulting from or arising out of the use of such plan, and the Contractor shall be fully responsible for any such damage, and the Contractor shall indemnify and hold harmless the Owner, its officers, employees or designated agents from any loss or liability resulting from the use of such plan.
5. The permit, together with a copy of the approved plan for trench safety, shall be maintained on the Jobsite at all times.
6. All bracings shall be adequate to protect and prevent movement, either horizontally or vertically, of existing utility lines not limited to water lines, storm lines, gas/petroleum lines, electrical and telephone conduits and any and all other underground or surface facilities within or adjacent to the excavation.

DocuSign Envelope ID: 330DEBD6-9A9E-4F34-BDCC-1AC1BAA701E9

7. Access to trenches shall be provided. Safe and suitable ladders shall be provided for all excavations four (4) feet and over in depth. The ladders shall project a minimum of two (2) feet above the top of the trench and one such ladder shall be provided for every 25 feet of open trench, as set forth in the rules, orders and regulations prescribed by the State of California Construction Safety Orders.

C. Safety: All work shall conform to the requirements of the State of California, Division of Industrial Safety, OSHA and CAL-OSHA. The Contractor's attention is directed to "Title 8 – Tunnel Safety Orders of the State of California".

1. Prior to construction, the Contractor shall conduct a pre-job Safety Conference with representatives from the Owner, subcontractor, and CAL-OSHA. This will be the responsibility of the Contractor to coordinate and organize. Meeting minutes shall be prepared by the Contractor and distributed to all parties. Costs incurred due to coordinating work, organizing a meeting with these representatives shall be borne by the Contractor at no additional charges to the Owner.
2. Underground construction shall be performed in such a manner so as to minimize ground movement in front of and surrounding the excavation and to prevent subsidence of ground surface, structure, and utilities above and in the vicinity of the crossing.

PART 2 – PRODUCTS

2.1 PRODUCTS AND MANUFACTURERS

A. Trench bedding and backfill materials: Refer to section 99-330528 and the following: Conform to ASTM C-33. As specified by the jurisdictional agencies in their respective Standard Drawings and/or Specifications, and as modified in the plans for trench restoration.

B. Outside and Filled material: After the utility casing is installed and securely blocked to prevent flotation, fill the intervening annular space with cement slurry, using pumping equipment in one continuous operation.

2.2 EXISTING FACILITIES

A. Removal and Restoration of Existing Facilities Tracks:

1. Protect existing facilities such as existing structures, foundations and footings, fencing, tracks, and utility pipes from damage during clearing and grubbing and excavation. Take all precautionary measures to make sure existing facilities are not disturbed or damaged by contractor's operation. Any damage due to contractor's negligence shall be repaired or replaced at contractor's cost.

2.3 FABRICATION

A. All products shall be factory fabricated. Field fabrication shall not be acceptable, unless otherwise approved in writing by Engineer or utility owner.

PART 3 – EXECUTION

3.1 MAINTAINING EXISTING SERVICES

A. Existing pipe crossings: Existing utilities shall remain in service 24 hours a day during casing installation. No interruption to the services will be permitted.

DocuSign Envelope ID: 330DEBD6-9A9E-4F34-BDCC-1AC1BAA701E9

3.2 PREPARATION

A. Clear and grub work area conforming to Section 99-311100, Clearing and Grubbing.

B. Maintain a neat appearance at the work site. Debris developed during construction shall be disposed of concurrently with its generation. Stockpiling of debris during construction shall not be allowed, and shall be removed from the project Jobsite by the end of each working day.

C. Maintenance and Protection of Excavations: Temporary support, adequate protection and maintenance of all underground and surface utilities, structures, drains, sewers and other obstructions encountered in the progress of the Work shall be furnished and paid for at Contractor's expense. Contractor shall take all reasonable precautions to prevent movement of the sides of excavation area. Contractor shall protect all excavations from surface water.

3.3 REMOVAL OR ABANDONMENT OF EXISTING FACILITIES

A. General: Removal or abandonment of existing utilities as shown on the Contract Plans shall conform to Division 02, Existing Conditions and Division 31, Earthwork of these Technical Specifications.

B. Existing Private Utilities:

1. Conform to the requirements of the Engineer for procedures and requirements in removing abandoned facilities.
2. Testing and remediation of contaminated soil, if necessary, shall conform to the requirements and local, state and federal regulations.
3. Conform to Section SC-14 Hazardous Materials for removal, disposal and stockpiling of contaminated soil.

3.4 CONSTRUCTION REQUIREMENTS

A. Tolerances: Pipe casings shall be installed true to line and grade. The tolerance for pipe slopes is 0.005+/-.

B. Limit of Work Schedule: Conform to the requirements of jurisdictional and regulatory agencies for limit of work schedule.

C. Interface with other work: Contractor shall coordinate work and schedule with other contractors working in the same project limit of work and shall conform to SC-10, Work Sequence & Constraints.

D. All required water, all work and materials required for obtaining, pumping, transporting and applying and otherwise disposing of said water shall be in an approved manner and shall be performed by, and at the expense of the Contractor and no extra or separate compensation will be made thereof.

3.5 REPAIR/RESTORATION

A. Contractor shall restore work area to its original condition prior to performing work. This includes repairing or replacing portion of fences, walls, embankment, pavement, and any other facilities.

3.6 CLEANING

A. General: Cleaning shall conform to GC-51, Disposal of Materials, GC-52, Protection of Completed Portions of Work and GC-53, Cleanup.

B. Contractor shall provide a final clean-up of entire project site prior to scheduling the final walk-through for acceptance of the work.

DocuSign Envelope ID: 330DEBD6-9A9E-4F34-BDCC-1AC1BAA701E9

C. Disposal of surplus material: Contractor shall dispose of all surplus excavated materials not needed for fills or other designated purposes. All material deemed unsuitable by Engineer shall be disposed of properly and replaced with approved materials.

D. Disposal of hazardous material: Conform to SC-14 and GC-9, Hazardous Material or Unusual Conditions. This includes but not limited to the excavated contaminated soil during the trench excavation work.

3.7 INSPECTION

A. All materials furnished and work done under this contract will be subject to inspection. The Contractor shall notify Engineer forty-eight (48) hours in advance of any work to be done, in order that inspection may be provided. The Contractor shall inform Engineer at least 72 hours in advance of the work as to the source of all materials proposed to be used in the work. Samples of materials shall be made available for testing as required by Engineer, prior to starting work and during the course of the work. Work done in the absence of an inspector, without said written permission, shall be subject to rejection.

B. Engineer shall have access at all times to all parts of the shop or plant where material under his or her inspection is being manufactured. When required, the Contractor shall notify Engineer in sufficient time in advance of the manufacture or production of materials to be supplied under this contract, in order that the Owner may arrange for mill or factory inspection and testing of same. Any materials shipped by the Contractor from the factory prior to having satisfactorily passed such testing and inspection by the Owner's representative, or prior to the receipt of notice from said representative that said materials have satisfactorily passed such testing and inspection, or that such testing and inspection will not be required, shall not be used in the Work.

C. The Contractor shall have no cause for claim against the Owner for delays involved in the testing of materials or the evaluation of such tests and no compensation will be made therefore.

D. If, in the opinion of Engineer, work is not being done in accordance with the Contract Documents, written notice shall be given to the Contractor or its authorized agent. Written notice to any supervisors or agent in charge of any portion of the Work in the absence of the Contractor, shall be considered as notice to the Contractor.

E. Work that is defective in its construction, or deficient in any of the requirements of these specifications, shall not be considered as accepted in the event of the failure of any employee of the Owner or inspector connected with the Work, to point out said defects or deficiency during construction. The Contractor shall correct any imperfect work whenever discovered. If he or she refuses or neglects to replace defective work, it may be replaced by the Owner, after notice to the Contractor and his or her sureties, at the expense of the Contractor and the Contractor and his or her sureties shall be liable therefor.

F. Contractor's Request for Final Inspection: The Contractor shall request Engineer, in writing, to conduct a final inspection when the Contractor considers the Work is complete.

G. A Final Inspection will be scheduled within ten (10) working days and conducted by Engineer, if the Owner deems the Work complete. If the Owner does not accept that the contract work as complete, Owner will decline to schedule a Final Inspection, and advise the Contractor the reason for not accepting the work as being complete. When the Contractor again deems the work to be complete, a new written request shall be submitted.

H. The Final Inspection will be conducted by Engineer. As a result of the inspection, the Owner will advise the Contractor of any work that must be completed or corrected before Acceptance, in the form of a Punchlist.

I. Prerequisites for Acceptance:
   1. Completion of Punchlist.

DocuSign Envelope ID: 330DEBD6-9A9E-4F34-BDCC-1AC1BAA701E9

2. Submittal of final payment requests, with lien releases.
3. Submittal of Record Drawings.

END OF SECTION